Chapter 8: Foundations

Table of Contents

Chapter 8: Foundations 1
Table of Contents 1
8-1 Introduction 3
8-2 Timber Pads 3
8-2.01 Introduction 3
8-2.02 Effective Bearing Length of Continuous Pad Systems 5
8-2.03 Soil Bearing Pressure Under Continuous Pad 8
8-2.04 Continuous Pad with Single Corbel 8
8-2.05 Continuous Pad with Two or More Corbels 15
8-2.06 Analysis of Individual Pads 24
8-2.07 Full Width Joints in Continuous Pads 27
8-2.08 Joints in Individual Pad Members 28
8-3 Concrete Pads 33
8-4 Soil Load Tests and Soil Bearing Values 33
8-4.01 Introduction 33
8-4.02 General Information 33
8-4.03 Load Test Procedure 34
8-4.04 Underlying Weak Strata 37
8-4.05 Settlement 39
8-4.06 Soil Bearing Values 39
8-5 Corbels 43
8-5.01 Introduction 43
8-5.02 Timber Corbels 43
8-5.03 Steel Corbels 44
8-6 Pile Foundations 45
8-6.01 Introduction 45

8-6.02 Pile Resistance 47
8-6.03 Steel Piles in Pile Bents 47
8-6.04 Timber Piles in Pile Bents 48
8-6.05 Analysis of Timber Pile Bents 52
8-6.06 Field Evaluation of Pile Capacity 69

8-1 Introduction

This chapter discusses the methods and procedures used by Structure Construction (SC) to evaluate the adequacy of falsework pad and pile foundations.

To a certain extent, the procedures are approximations, which were developed from a subjective evaluation of the manner in which falsework pads and piles react when loads are applied. Although empirical in some cases, the procedures give results that are acceptable in the light of falsework requirements. To ensure uniformity, procedures are to be followed by bridge field personnel in all cases when reviewing the contractor's design for structural adequacy and compliance with contract requirements.

From an administrative standpoint, the elements of the falsework system comprising the foundation differ from other elements of the system in one important aspect. The Standard Specifications, Section 48-2.03B, *Temporary Structures – Falsework – Construction - Foundations,* permit the contractor to place falsework pads and drive falsework piles before the design has been reviewed and the shop drawings authorized. Pad placement and pile driving must be inspected to the extent necessary to ensure adequate foundation support at the time the work is done. Any inconsistencies and differences between the shop drawings and the work being performed in the field should be brought to the contractor's attention immediately.

8-2 Timber Pads

8-2.01 Introduction

Individual posts may be supported by individual pads, which may be square or rectangular. A row of several posts may be supported by a continuous pad. Falsework pads may consist of a single member or of several members set side by side. Normally, for continuous pads, a lower cap beam is used to distribute load from the posts to the corbels.

Corbels are short beams which are used to distribute the post load or lower cap load across the top of the pads. In a conventional falsework bent with 12 x 12 timber posts, the corbel is usually a timber member of the same dimensions as the post.

When the vertical design load is very high, as is often the case for a falsework bent adjacent to a wide traffic opening or under the long hinge side, it is often necessary to use two or more closely spaced corbels to adequately distribute the load over the pad. Steel beams are also often used as corbels at locations where post loads are relatively high.

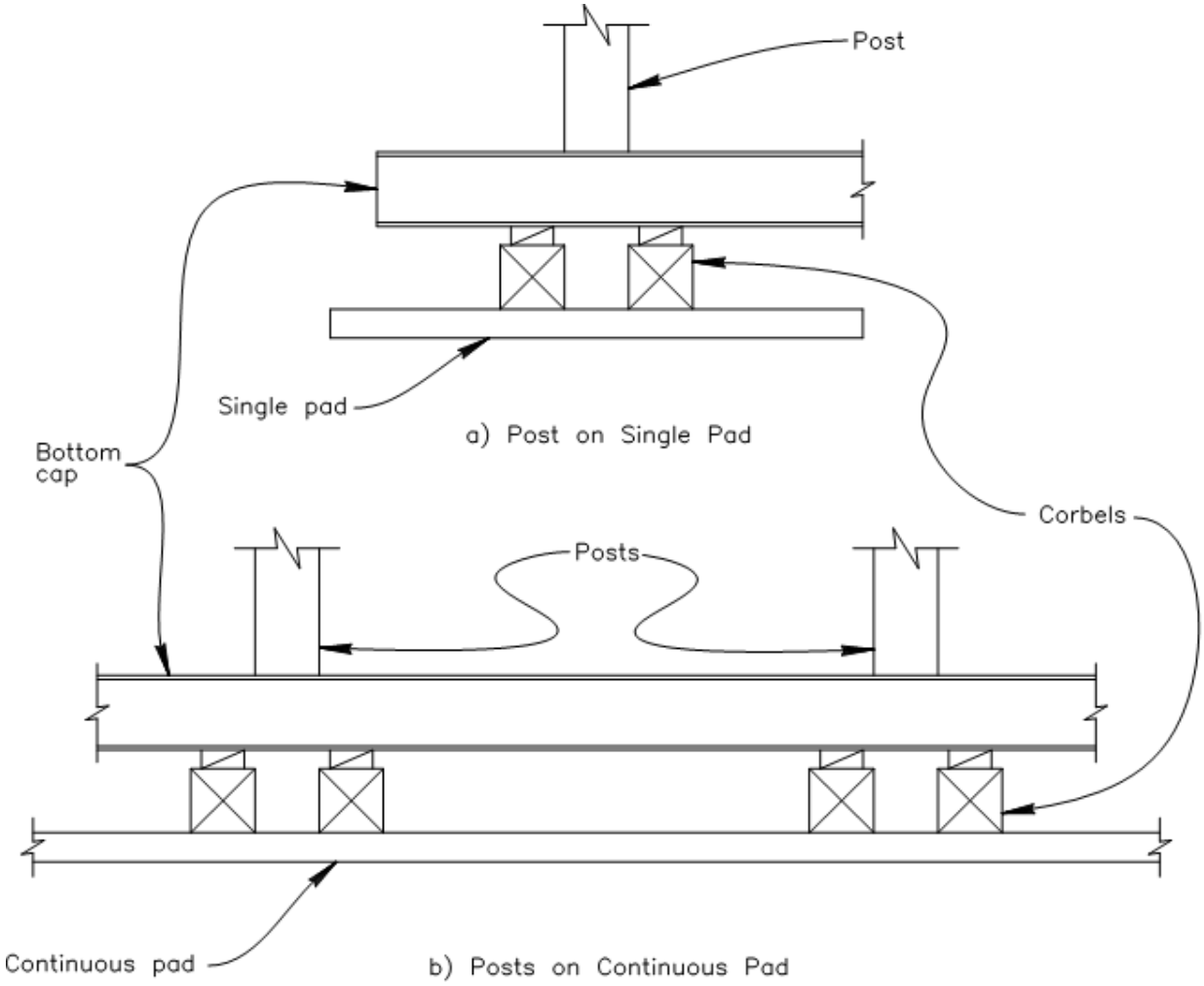

Figure 8-1. Timber Pads.

As a general design procedure, a pad may be viewed as a cantilever beam extending from the face of the post or corbel. With the beam loaded uniformly with the soil pressure, bending and shear stresses may be calculated. However, this approach will not give exact values because the assumed uniform load distribution does not occur in practice.

To facilitate analysis of timber pad systems, SC has developed an empirical procedure, which provides sufficient pad rigidity to assure a reasonably uniform load distribution. The procedure is explained in the following sections and illustrated in Appendix D *Example Problems* in Example 19 and 20, *Individual Falsework Pads, and* Example 21 and 22, *Continuous Pads.*

8-2.02 Effective Bearing Length of Continuous Pad Systems

The effective bearing lengths given by the SYM formula in Section 8-2.02A, *Effective Bearing Length for Uniform Post Spacing (SYM Formula,)* is the pad length where the bending stress in the pad equals the allowable bending stress and is the maximum length over which a pad is theoretically capable of distributing the post load uniformly. However, the pad length is limited to physical constraints, such as the post or corbel spacing.

Since the formula is based on bending, it is not necessary to calculate the bending stress, because for a given post load, any pad length less than the length given by the formula will produce a bending stress that is less than the allowable stress.

8-2.02A Effective Bearing Length for Uniform Post Spacing (SYM Formula)

Referring to Figure 8-2, *Theoretical Effective Length for Uniform Post Spacing,* in a continuous pad system where the posts are uniformly spaced, the effective bearing length of the pad, measured in the direction of the wood grain, is equal to the 1/2 post width plus 2 times the length of a cantilever extending from a point midway between the center and edge of the post or corbels to a distance such that the calculated bending stress in the pad equals the allowable stress.

$$\mathbf{L_e = \frac{t}{2} + 2L_c} \qquad \text{(8-2.02A-1)}$$

where $\mathbf{L_e}$ = Effective bearing length of pad (ft)

t = Width of post or corbel (ft)

$\mathbf{L_c}$ = Length of cantilever extending from a point midway between the center and edge of the post or corbel to a distance such that the bending stress in the pad is zero (ft)

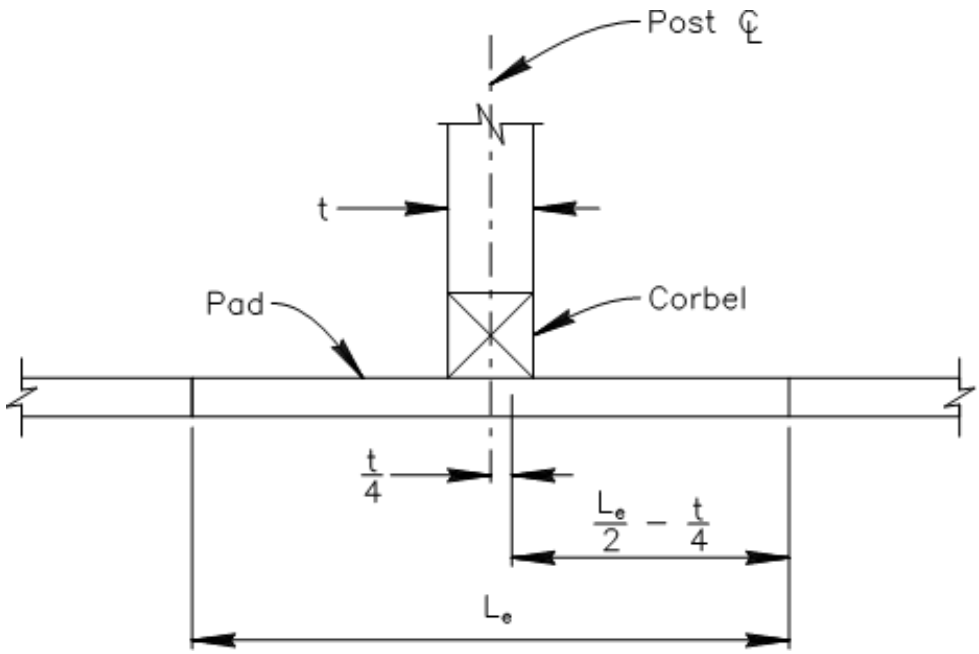

Figure 8-2. Theoretical Effective Length for Uniform Post Spacing.

The formula below can be used to calculate the effective length at an interior post when the post spacing is uniform along the pad.

The equation was derived from a simplified method. The simplified formula gives results that are accurate within 3% for the range of post loads and member sizes commonly used for falsework construction in California. For descriptive purposes, the simplified formula is designated the "SYM" formula.

The SYM formula is:

$$\mathbf{L_{SYM}} = \frac{\mathbf{1}}{\mathbf{12}}\left(\frac{\mathbf{8F_b{}'S}}{\mathbf{1000P}} + \mathbf{t}\right) \qquad \text{(8-2.02A-2)}$$

where $\mathbf{L_{SYM}}$ = Effective length of pad (ft)

$\mathbf{F_b{}'}$ = Adjusted bending stress design value (psi)

S = Section modulus of pad (in^3)

P = Post load (kips)

t = Width of post or corbel (in)

The pad bearing length is determined by:

$$\mathbf{L_b = \text{ smaller of } \begin{cases} \text{post spacing} \\ L_{SYM} \end{cases}} \qquad (8\text{-}2.02A\text{-}3)$$

8-2.02B Effective Bearing Length for Non-Uniform Post Spacing

Referring to Figure 8-3, *Pad Length for Non-Uniform Post Spacing*, in a continuous pad system where the posts are not uniformly spaced, the pad is asymmetrical for analysis. For the asymmetrical condition, the limiting pad length on one side of a post does not always equal the limiting length on the opposite side, and the two respective lengths must be determined independently.

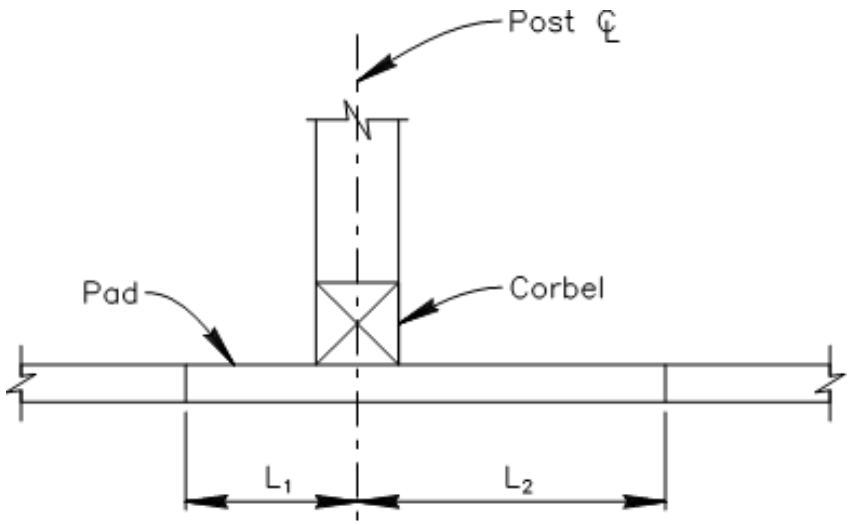

Figure 8-3. Pad Length for Non-Uniform Post Spacing.

The pad length on each side is determined by the SYM formula discussed in Section 8-2.02A, *Effective Bearing Length for Uniform Post Spacing (SYM Formula)*.

The limiting pad bearing length on the short side, $\mathbf{L_1}$, is determined by:

$$\mathbf{L_1 = \text{ smaller of } \begin{cases} \frac{1}{2}\text{post spacing on the short side} \\ \frac{1}{2}L_{SYM}, \text{ see equation 8-2.02A-2} \end{cases}} \qquad (8\text{-}2.02B\text{-}1)$$

The limiting pad bearing length on the long side, $\mathbf{L_2}$, is determined by:

$$\mathbf{L_2 = \text{ smaller of } \begin{cases} \frac{1}{2}\text{post spacing on the long side} \\ \frac{1}{2}L_{SYM}, \text{ see equation 8-2.02A-2} \end{cases}} \qquad (8\text{-}2.02B\text{-}2)$$

The total pad bearing length is the sum of the limiting values above and will be discussed in more detail in Section 8-2.04, *Continuous Pad with Single Corbel,* and Section 8-2.05, *Continuous Pad with Two or More Corbels*.

8-2.03 Soil Bearing Pressure Under Continuous Pad

The soil bearing pressure under the continuous pad within the area of the bearing length is calculated by:

$$\sigma_b = \frac{1000P}{L_b\left(\frac{b}{12}\right)} \qquad (8\text{-}2.03\text{-}1)$$

where σ_b = Soil bearing pressure (psf)

L_b = Total bearing length of the pad (ft)

P = Post load (kips)

b = Width of pad (in)

8-2.04 Continuous Pad with Single Corbel

This section shows the procedure for continuous timber pads with load distribution by a single corbel per post. Procedures are shown for uniformly and non-uniformly spaced interior posts and at an exterior post.

8-2.04A Horizontal Shear Stress in Pads

The equations for the horizontal shear stress, f_v, consider the pad as a continuous beam loaded uniformly with the soil pressure beyond the distance, **d**, from the post or corbel, where **d** is the pad thickness. See Section 5-2.04C, *Horizontal Shear*, for additional information about horizontal shear.

8-2.04A(1) Uniform Post Spacing (Symmetrical Analysis)

The horizontal shear stress in a continuous pad with uniformly spaced posts is determined by:

$$f_v = \left(\frac{3}{2}\right)\frac{\left(\dfrac{1000P\left[\frac{L_b}{2} - \frac{\frac{t}{2}}{12} - \frac{d}{12}\right]}{L_b}\right)}{bd} \qquad (8\text{-}2.04A(1)\text{-}1)$$

where f_v = Horizontal shear stress in the pad on the long side (psi)

P = Post load (kips)

L_b = Total bearing length of the pad (ft)

t = Width of post or corbel (in)

d = Thickness of pad (in)

b = Width of pad (in)

8-2.04A(2) Non-Uniform Post Spacing (Asymmetrical Analysis)

The horizontal shear stress on the long side of the post in a continuous pad with non-uniformly spaced posts is determined by:

$$\mathbf{f_v} = \left(\frac{3}{2}\right)\frac{\left(\dfrac{1000P\left[L_2 - \frac{\frac{t}{2}}{12} - \frac{d}{12}\right]}{L_b}\right)}{bd} \qquad \text{(8-2.04A(2)-1)}$$

where **f_v** = Horizontal shear stress in the pad on the long side (psi)

P = Post load (kips)

L_2 = Pad length on long side (ft)

t = Width of post or corbel (in)

d = Thickness of pad (in)

L_b = Total bearing length of the pad (ft)

b = Width of pad (in)

8-2.04B Pad Analysis at Interior Post with Uniform Spacing

Figure 8-4, *Pad at Interior Posts with Uniform Spacing,* shows a falsework bent where the post spacing (PS) is uniform along a continuous pad and the post load is distributed across the pad by a single corbel.

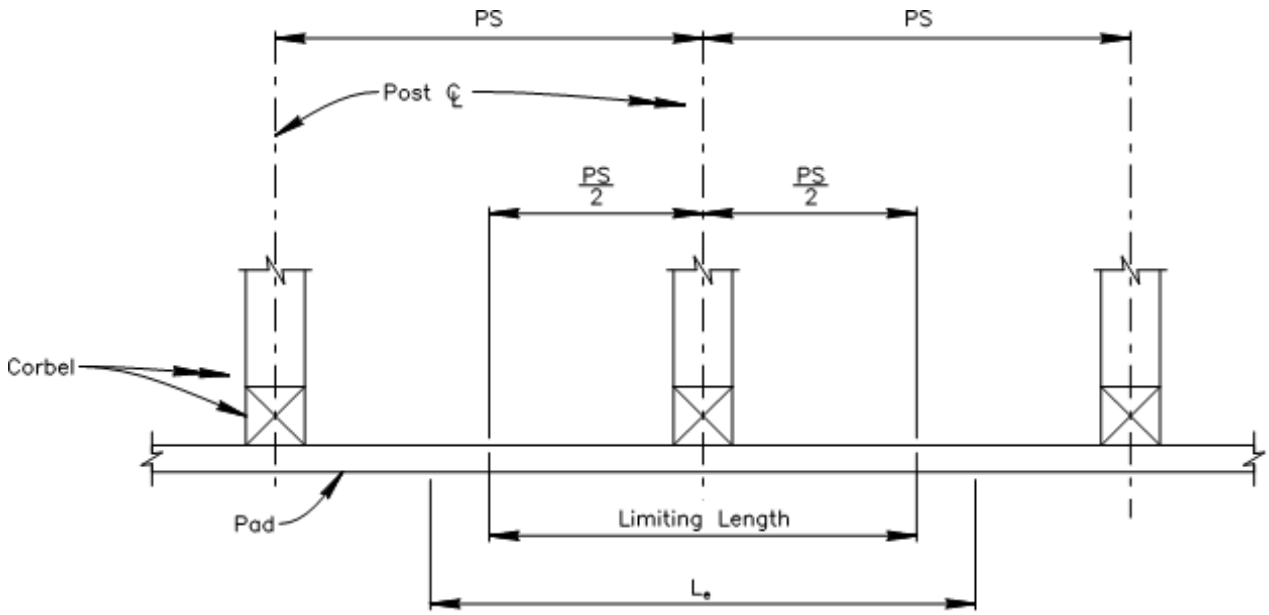

Figure 8-4. Pad at Interior Posts with Uniform Spacing.

When the post spacing is uniform, the bearing length is symmetrical. Analyze the pad as follows:

1. Calculate the effective length, $\mathbf{L_e}$, of the pad using the SYM formula:

$$\mathbf{L_e} = \mathbf{L_{SYM}} \quad \text{from equation 8-2.02A-2} \qquad (8\text{-}2.04B\text{-}1)$$

2. The limiting bearing length, $\mathbf{L_b}$, is determined by:

$$\mathbf{L_b} = \textbf{smaller of} \begin{cases} \textbf{Post Spacing} \\ \mathbf{L_e} \end{cases} \qquad (8\text{-}2.04B\text{-}2)$$

3. Calculate the soil pressure, σ_b, using the limiting bearing length, $\mathbf{L_b}$, from step 2 and compare to the allowable soil bearing value. Use the equation 8-2.03-1 for σ_b.
4. Calculate the pad stress, $\mathbf{f_v}$, due to horizontal shear using the limiting bearing length, $\mathbf{L_b}$, from step 2. Calculate the stress at a distance, **d**, from the face of the post or corbel where **d** is the pad thickness. Use equation 8-2.04A(1)-1 for $\mathbf{f_v}$.

8-2.04C Pad Analysis at Interior Post with Non-Uniform Spacing

Figure 8-5, *Pad at Interior Posts with Non-Uniform Spacing,* shows a falsework bent where the post spacing is non-uniform along a continuous pad and the post load is distributed across the pad by a single corbel. When the post spacing is not uniform, the

contribution to system adequacy made by the pad on one side of a post must be determined independently of the contribution made by the pad on the opposite side.

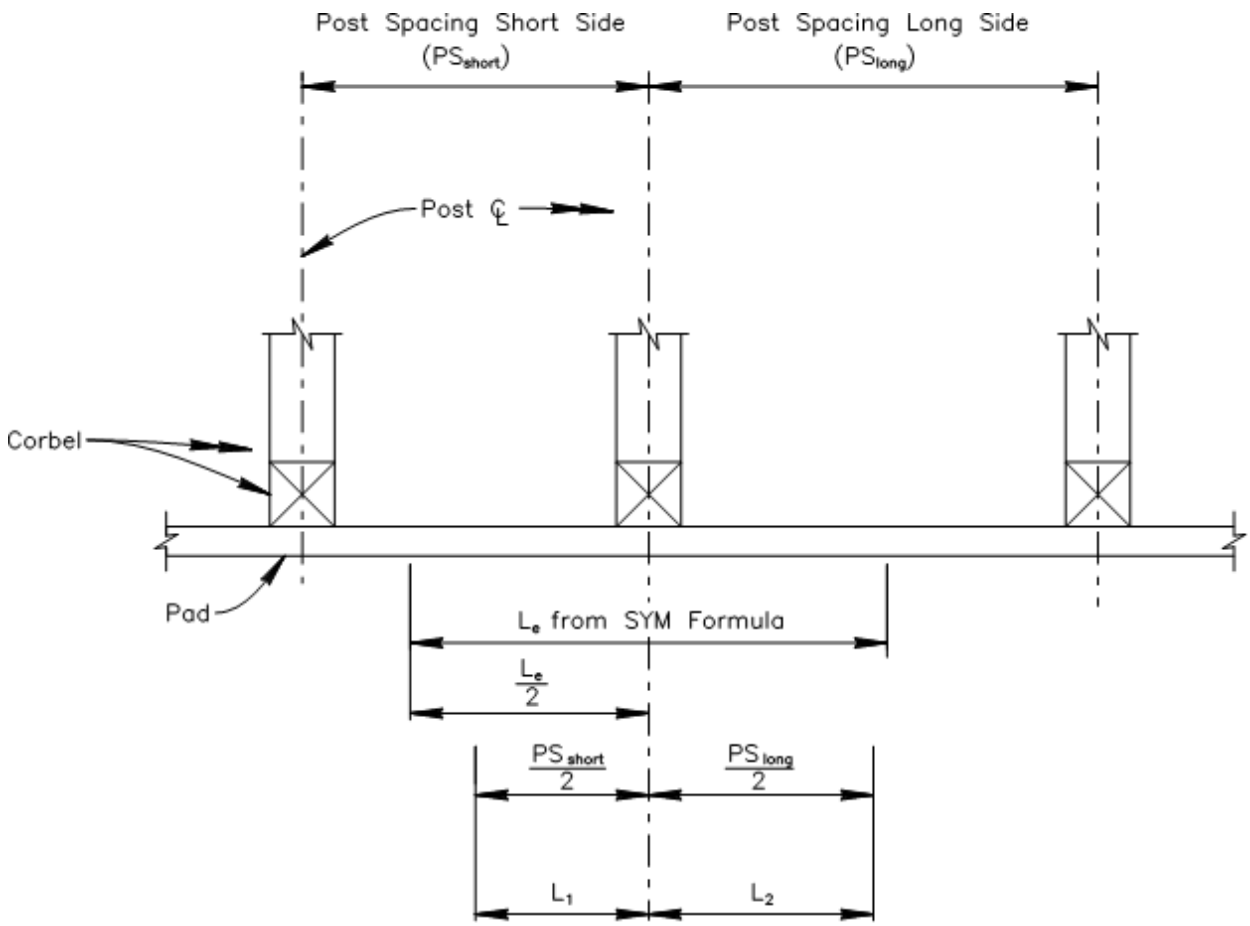

Figure 8-5. Pad at Interior Posts with Non-Uniform Spacing.

When the post spacing is non-uniform, the bearing length can be asymmetrical or symmetrical. Begin with the side that has the shorter post spacing. In this case it is the left side. Analyze the pad as follows:

1. Calculate the effective length, $\mathbf{L_e}$, of the pad using the SYM formula:

$$\mathbf{L_e} = \mathbf{L_{SYM}} \text{ from equation 8-2.02A-2} \qquad (8\text{-}2.04C\text{-}1)$$

2. The limiting bearing length on the short side, $\mathbf{L_1}$, is determined by:

$$\mathbf{L_1 = \text{ smaller of } \begin{cases} \frac{PS_{short}}{2} \\ \frac{L_e}{2} \end{cases}} \qquad (8\text{-}2.04C\text{-}2)$$

3. The limiting bearing length on the long side, $\mathbf{L_2}$, is determined by:

$$\mathbf{L_2 = \text{ smaller of } \begin{cases} \frac{PS_{long}}{2} \\ \frac{L_e}{2} \end{cases}} \qquad (8\text{-}2.04C\text{-}3)$$

4. <u>Asymmetrical Analysis</u>: If $\mathbf{L_1 \neq L_2}$, the bearing length is asymmetrical. (If the lengths are equal, skip to step 5)

   a. The bearing length, $\mathbf{L_b}$, is determined by:

$$\mathbf{L_b = L_1 + L_2} \qquad (8\text{-}2.04C\text{-}4)$$

   b. Calculate the soil pressure, σ_b, using the limiting bearing length, $\mathbf{L_b}$, from step 4a and compare to the allowable soil bearing value. Use the equation (8-2.03-1) for σ_b.

   c. Calculate the pad stress, $\mathbf{f_v}$, on the long side due to horizontal shear using the lengths $\mathbf{L_2}$ from step 3 and $\mathbf{L_b}$ from step 4a. Calculate the stress at a distance, **d**, from the face of the post or corbel where **d** is the pad thickness. Use equation (8-2.04A(2)-1) for $\mathbf{f_v}$.

5. <u>Symmetrical Analysis</u>: If $\mathbf{L_1 = L_2}$, the bearing length is symmetrical.

   a. The limiting bearing length, $\mathbf{L_b}$, is the length determined in step 1:

$$\mathbf{L_b = L_e} \qquad (8\text{-}2.04C\text{-}5)$$

   b. Calculate the soil pressure, σ_b, using the limiting bearing length, $\mathbf{L_b}$, from step 4a and compare to the allowable soil bearing value. Use the equation (8-2.03-1) for σ_b.

   c. Calculate the pad stress, $\mathbf{f_v}$, due to horizontal shear using the limiting bearing length, $\mathbf{L_b}$, from step 4a. Calculate the stress at a distance, **d**,

from the face of the post or corbel where **d** is the pad thickness. Use equation 8-2.04A(1)-1 for $\mathbf{f_v}$.

8-2.04D Pad Analysis at Exterior Post

This section shows the procedures for timber pads at exterior posts. Figure 8-6, *Pad at Exterior Post,* shows a falsework bent with an exterior post on a continuous pad and the post load is distributed across the pad by a single corbel.

For exterior posts, the contribution to the system adequacy made by the length of pad on the outside of the post must be determined independently of the contribution made by the pad on the inside.

For typical bent configurations and post spacing, the pad length on the inside of the post will be the long side for the analysis. However, the procedure is also valid in any case where the long side length is on the outside.

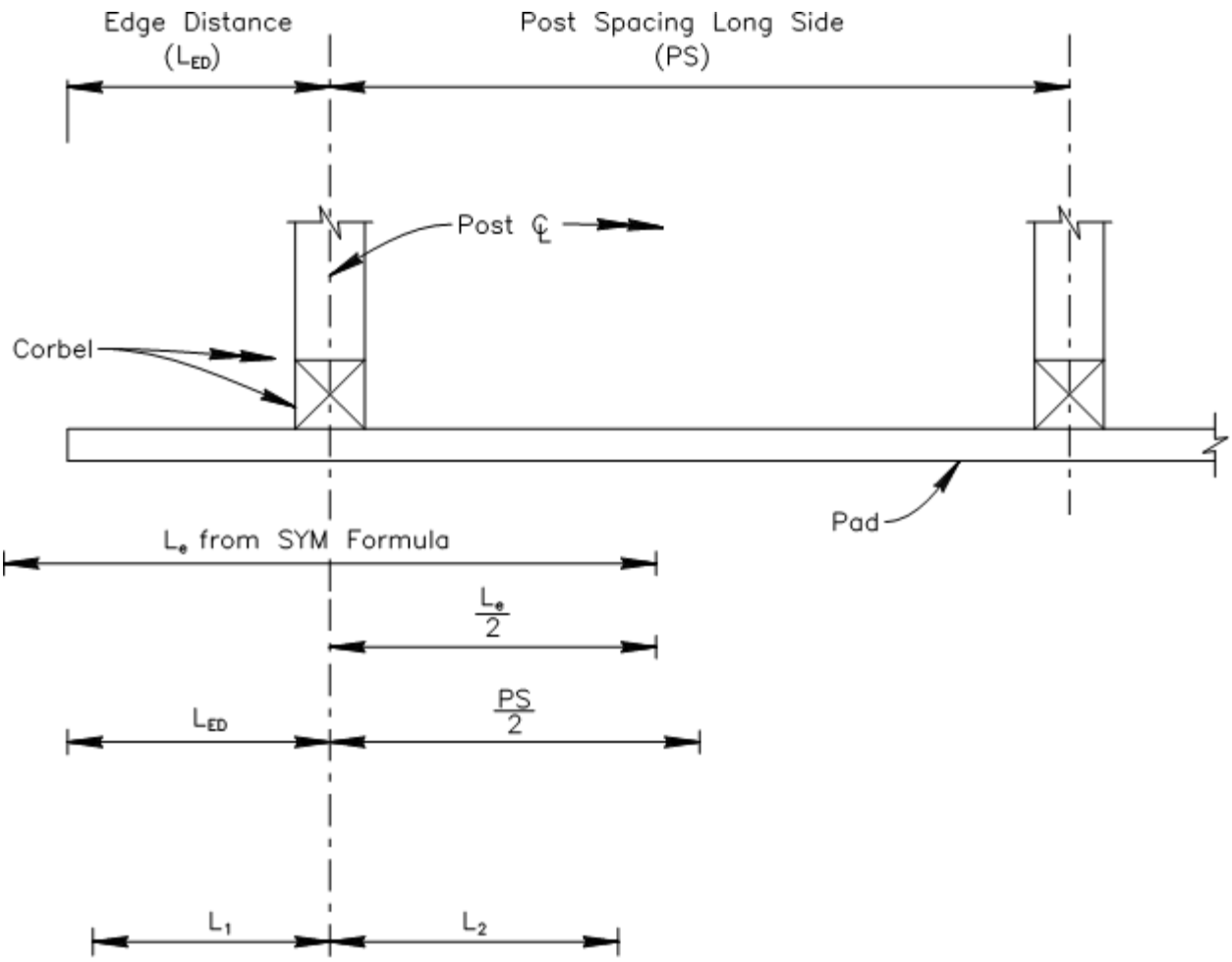

Figure 8-6. Pad at Exterior Post.

For exterior posts the bearing length can be asymmetrical or symmetrical. Begin with the outside, in this case the left side. Analyze the pad as follows:

1. Calculate the effective length, $\mathbf{L_e}$, of the pad using the SYM formula:

$$\mathbf{L_e = L_{SYM}} \text{ from equation 8-2.02A-2} \qquad (8\text{-}2.04D\text{-}1)$$

2. The limiting bearing length on the outside, $\mathbf{L_1}$, is determined by:

$$\mathbf{L_1 = \text{ smaller of } \begin{cases} L_{ED} \\ \frac{L_e}{2} \end{cases}} \qquad (8\text{-}2.04D\text{-}2)$$

3. The limiting length on the inside, $\mathbf{L_2}$, is determined by:

$$\mathbf{L_2 = \text{ smaller of } \begin{cases} \frac{PS}{2} \\ \frac{L_e}{2} \end{cases}} \qquad (8\text{-}2.04D\text{-}3)$$

4. <u>Asymmetrical Analysis</u>: If $\mathbf{L_1 \neq L_2}$, the bearing length is asymmetrical. (If the lengths are equal, skip to step 5).

   a. The bearing length, $\mathbf{L_b}$, is determine by:

$$\mathbf{L_b = L_1 + L_2} \qquad (8\text{-}2.04D\text{-}4)$$

   b. Calculate the soil pressure, $\boldsymbol{\sigma_b}$, using the limiting bearing length, $\mathbf{L_b}$, from step 4a and compare to the allowable soil bearing value. Use the equation 8-2.03-1 for $\boldsymbol{\sigma_b}$.

   c. Calculate the pad stress, $\mathbf{f_v}$, on the long side due to horizontal shear using the greater of L1 and L2 from steps 2 and 3 and $\mathbf{L_b}$ from step 4a. Calculate the stress at a distance, **d**, from the face of the post or corbel where **d** is the pad thickness. Use equation 8-2.04A(2)-1 for $\mathbf{f_v}$.

5. <u>Symmetrical Analysis</u>: If $\mathbf{L_1 = L_2}$, the bearing length is symmetrical. This is unlikely to occur in actual practice:

   a. The limiting bearing length, $\mathbf{L_b}$, at the exterior post under consideration is the sum of the lengths from step 3 and step 4.

$$\mathbf{L_b = L_1 + L_2} \qquad (8\text{-}2.04D\text{-}5)$$

b. Calculate the soil pressure, σ_b, using the limiting bearing length, L_b, from step 5a and compare to the allowable soil bearing value. Use the equation 8-2.03-1 for σ_b.

c. Calculate the stress in the pad, f_v, due to horizontal shear using the limiting bearing length, L_b, from step 5a. Calculate the stress at a distance, **d**, from the face of the post or corbel where **d** is the pad thickness. Use equation 8-2.04A(1)-1 for f_v.

8-2.05 Continuous Pad with Two or More Corbels

It is common to use a falsework system where the post load is transferred through a lower cap to two or more corbels as shown in Figure 8-7, *Pad with Double Corbels*. This section discusses a procedure on how to analyze continuous pads in double corbel systems. This procedure should be used when the clear distance between adjacent corbels is equal to or less than twice the pad thickness.

In cases where more than two corbels are used, the length, **m**, is the distance measured centerline-to-centerline between the two outermost corbels in the system.

In the preceding sections, the term post spacing has been used in the procedure for continuous pads with one corbel per post. However, in the double corbel system, the continuous pad analysis considers the corbel spacing rather than the post spacing.

In some cases, the load from two or more posts will contribute to the total vertical load to be distributed through the corbel system. For this configuration, the total load applied to the system must be used to calculate the effective length of the pad.

When the vertical load is distributed to a continuous pad through a system of two closely spaced corbels, the pad distributes the load as though it were imposed by a single corbel having a width along the pad of approximately the distance between the outside faces of the adjacent corbels. Because of this behavior, the procedure discussed in the preceding sections would give limiting lengths that are shorter, and soil bearing values that are higher, than is the case. Therefore, SC developed the following procedure for systems with two or more corbels.

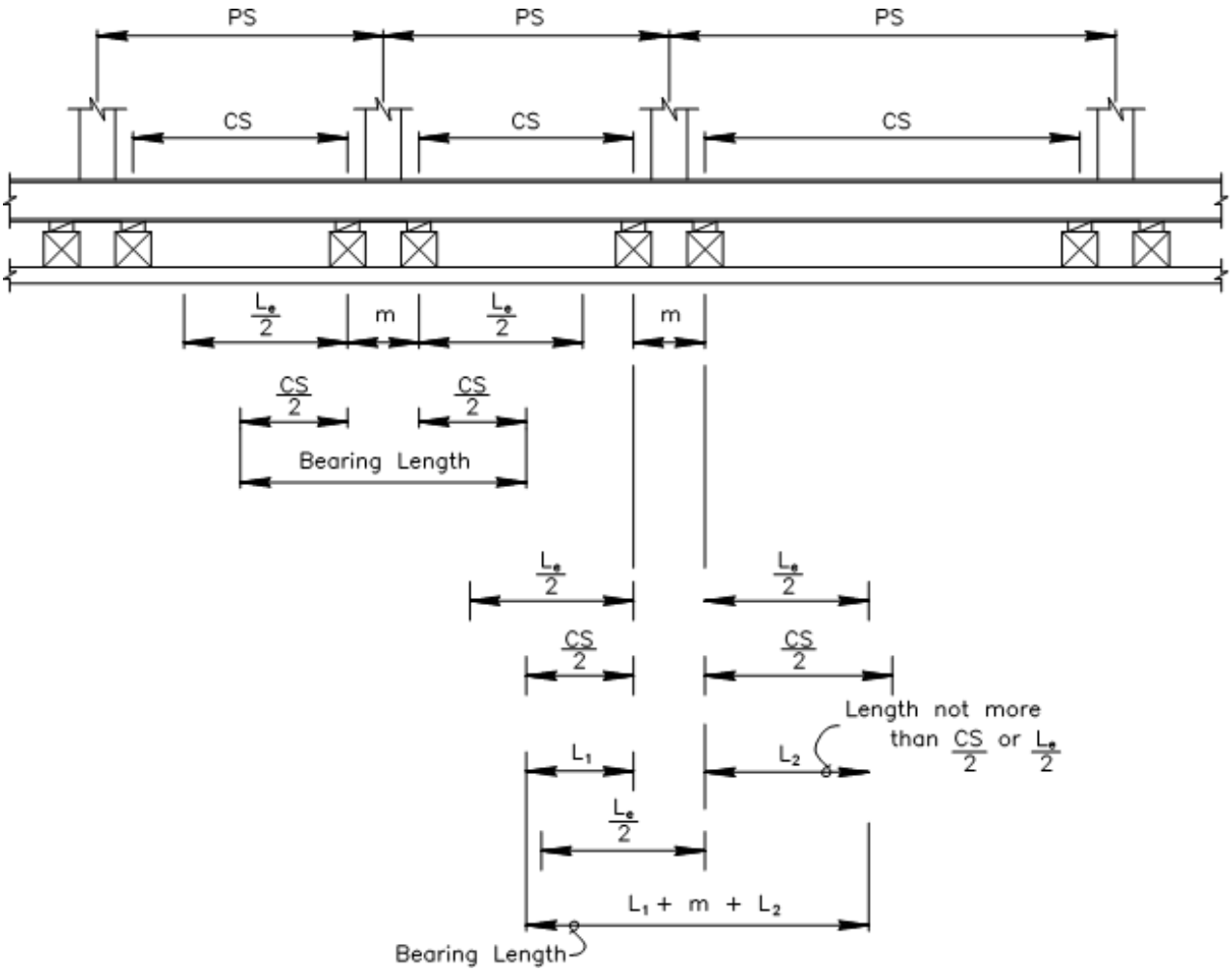

Figure 8-7. Pad with Double Corbels.

8-2.05A Horizontal Shear Stress in Pads

The equations for the horizontal shear stress, $\mathbf{f_v}$, consider the pad as a continuous beam loaded uniformly with the soil pressure beyond the distance, **d**, from the corbel, where **d** is the pad thickness. See Section 5-2.04C, *Horizontal Shear*, for additional information about horizontal shear.

8-2.05A(1) Uniform Corbel Spacing (Symmetrical Analysis)

The horizontal shear in a continuous pad with uniformly spaced posts is determined by:

$$f_v = \left(\frac{3}{2}\right)\frac{\left(\dfrac{1000P\left[\dfrac{L_b}{2}-\dfrac{\frac{m}{2}}{12}-\dfrac{\frac{t}{2}}{12}-\dfrac{d}{12}\right]}{L_b}\right)}{bd} \qquad \text{(8-2.05A(1)-1)}$$

where f_v = Horizontal shear stress in the pad on the long side (psi)

P = Post load (kips)

L_b = Total bearing length of the pad (ft)

m = Corbel spacing (ft)

t = Width of corbel (in)

d = Thickness of pad (in)

b = Width of pad (in)

8-2.05A(2) Non-Uniform Corbel Spacing (Asymmetrical Analysis)

The horizontal shear on the long side of the post in a continuous pad with non-uniformly spaced posts is determined by:

$$f_v = \left(\frac{3}{2}\right)\frac{\left(\dfrac{1000P\left[L_2-\dfrac{\frac{t}{2}}{12}-\dfrac{d}{12}\right]}{L_b}\right)}{bd} \qquad \text{(8-2.05A(2)-1)}$$

where f_v = Horizontal shear stress in the pad on the long side (psi)

P = Post load (kips)

L_2 = Pad length on long side (ft)

t = Width of corbel (in)

d = Thickness of pad (in)

L_b = Total bearing length of the pad (ft)

b = Width of pad (in)

8-2.05B Pad Analysis at Interior Post with Uniform Post Spacing

Figure 8-8, *Pad at Interior Post with Uniform Spacing and Double Corbels*, shows a falsework bent where the post spacing (PS) is uniform along a continuous pad and the post load is distributed across the pad by double corbels.

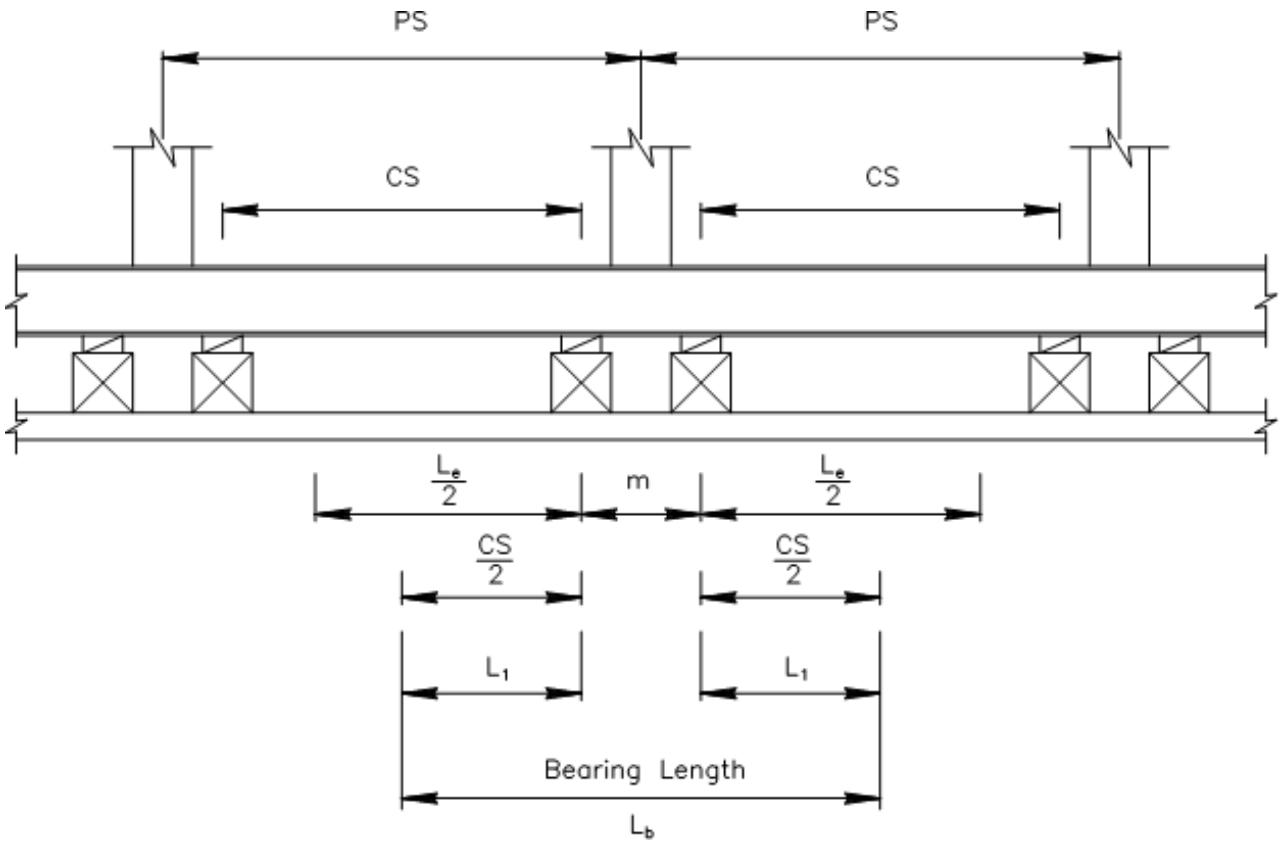

Figure 8-8. Pad at Interior Post with Uniform Spacing and Double Corbels.

When the post spacing is uniform, the bearing length is symmetrical. Analyze the pad as follows:

1. Calculate the effective length, $\mathbf{L_e}$, of the pad using the SYM formula. For this calculation, use the post load, **P**, not the load applied by the corbel. The pad responds to the post load by a system of two closely spaced corbels as though the load was applied by a single corbel:

$$\mathbf{L_e} = \mathbf{L_{SYM}} \text{ from equation 8-2.02A-2} \qquad (8\text{-}2.05B\text{-}1)$$

2. The limiting length on each side, $\mathbf{L_1}$, is determined by:

$$\mathbf{L_1 = \text{ smaller of } \begin{cases} \frac{CS}{2} \\ \frac{L_e}{2} \end{cases}} \qquad \text{(8-2.05B-2)}$$

3. The limiting bearing length, $\mathbf{L_b}$, is the sum of two times limiting lengths found in step 2 plus the corbel spacing, **m**:

$$\mathbf{L_b = 2L_1 + m} \qquad \text{(8-2.05B-3)}$$

4. Calculate the soil pressure, σ_b, using the limiting bearing length, $\mathbf{L_b}$, from step 3 and compare to the allowable soil bearing value. Use the equation 8-2.03-1 for σ_b.
5. Calculate the pad stress, $\mathbf{f_v}$, due to horizontal shear using the limiting bearing length, $\mathbf{L_b}$, from step 3. Calculate the stress at a distance, **d**, from the face of the corbel where **d** is the pad thickness. Use equation 8-2.05A(1)-1 for $\mathbf{f_v}$.

8-2.05C Pad Analysis at Interior Post with Non-Uniform Post Spacing

Figure 8-9, *Pad at Interior Post with Non-Uniform Spacing and Double Corbels*, shows a falsework bent where the post spacing is non-uniform along a continuous pad and the post load is distributed across the pad by double corbels, When the post spacing is not uniform, the contribution to system adequacy made by the pad on one side of a post must be determined independently of the contribution made by the pad on the opposite side.

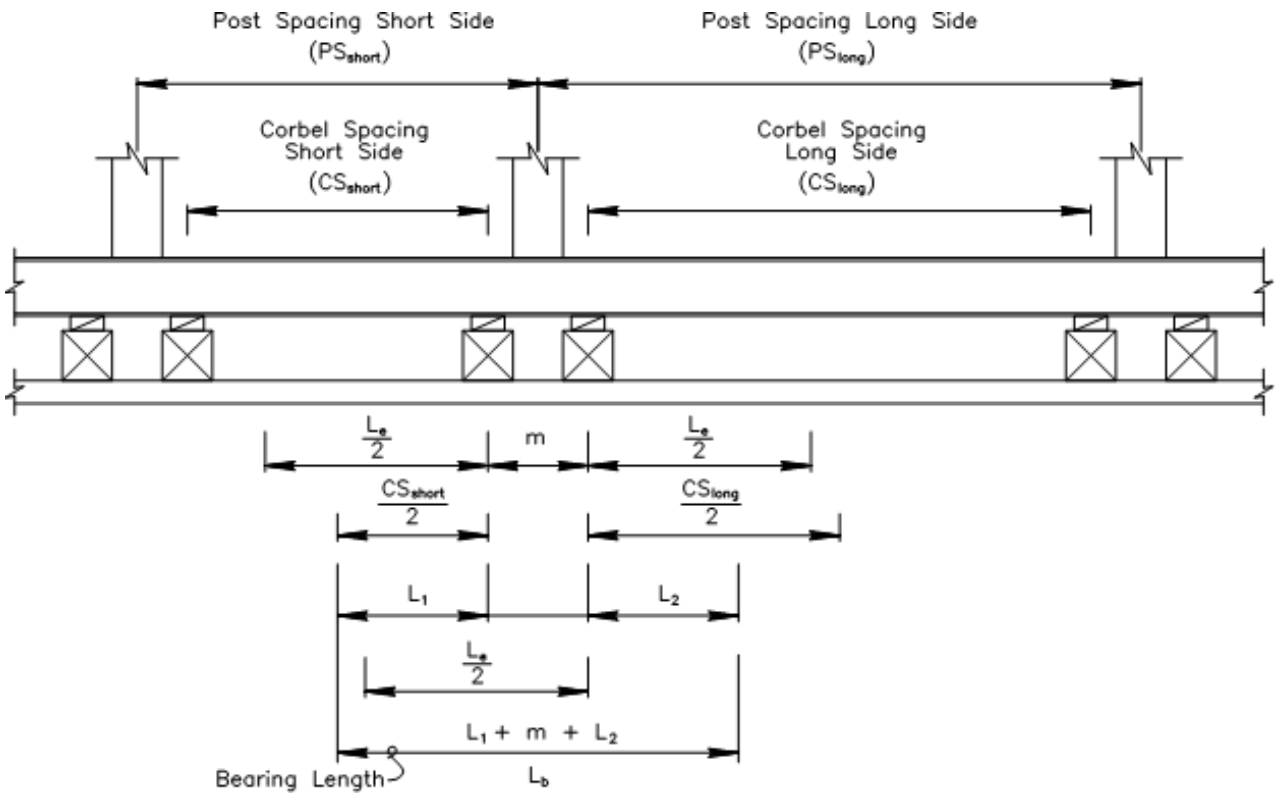

Figure 8-9. Pad at Interior Post with Non-Uniform Spacing and Double Corbels.

When the post spacing is non-uniform, the bearing length can be asymmetrical or symmetrical. Begin with the side that has the shorter post spacing. In this case the left side. Analyze the pad as follows:

1. Calculate the effective length, $\mathbf{L_e}$, of the pad using the SYM formula. For this calculation, use the post load, **P**, not the load applied by the corbel. The pad responds to the post load by a system of two closely spaced corbels as though the load was applied by a single corbel:

$$\mathbf{L_e} = \mathbf{L_{SYM}} \quad \text{from equation 8-2.02A-2} \qquad (8\text{-}2.05C\text{-}1)$$

2. The limiting length on the short side, $\mathbf{L_1}$, is determined by:

$$\mathbf{L_1} = \textbf{smaller of} \begin{cases} \dfrac{CS_{short}}{2} \\ \dfrac{\mathbf{L_e}}{2} \end{cases} \qquad (8\text{-}2.05C\text{-}2)$$

3. The limiting length on the long side, $\mathbf{L_2}$, is determined by:

$$\mathbf{L_2 = \text{ smaller of } \begin{cases} \frac{CS_{long}}{2} \\ \frac{L_e}{2} \end{cases}} \qquad (8\text{-}2.05C\text{-}3)$$

4. Asymmetrical Analysis: If $\mathbf{L_1 \neq L_2}$, the bearing length is asymmetrical. (If the lengths are equal, skip to step 5).

   a. The limiting bearing length, $\mathbf{L_b}$, is the sum of the limiting lengths found in step 2 and step 3c plus the corbel spacing (m):

$$\mathbf{L_b = L_1 + m + L_2} \qquad (8\text{-}2.05C\text{-}4)$$

   b. Calculate the soil pressure, σ_b, using the limiting bearing length, $\mathbf{L_b}$, from step 4a and compare to the allowable soil bearing value. Use the equation 8-2.03-1 for σ_b.

   c. Calculate the pad stress, $\mathbf{f_v}$, on the long side due to horizontal shear using the lengths $\mathbf{L_2}$ from step 3 and $\mathbf{L_b}$ from step 4a. Calculate the stress at a distance, **d**, from the face of the corbel where **d** is the pad thickness. Use equation 8-2.05A(2)-1 for $\mathbf{f_v}$.

5. Symmetrical Analysis: If $\mathbf{L_1 = L_2}$ the bearing length is symmetrical.

   a. The limiting bearing length, $\mathbf{L_b}$, is the sum of the length from Step 1 plus the corbel spacing, **m**:

$$\mathbf{L_b = L_e + m} \qquad (8\text{-}2.05C\text{-}5)$$

   b. Calculate the soil pressure, σ_b, using the limiting bearing length, $\mathbf{L_b}$, from step 5a and compare to the allowable soil bearing value. Use the equation 8-2.03-1 for σ_b.

   c. Calculate the pad stress, $\mathbf{f_v}$, due to horizontal shear using the limiting bearing length, $\mathbf{L_b}$, from step 5a. Calculate the stress at a distance, **d**, from the face of the corbel where **d** is the pad thickness. Use the equation 8-2.05A(1)-1 for $\mathbf{f_v}$.

8-2.05D Pad Analysis at Exterior Post

This section shows the procedures for timber pads at exterior posts with double corbels. Figure 8-10, *Pad at Exterior Post with Double Corbels* shows a double corbel

configuration at an exterior post on a continuous pad and the post load is distributed across the pad by two corbels. For exterior posts, the contribution to the system adequacy made by the length of pad on the outside of the post must be determined independently of the contribution made by the pad on the inside. For typical bent configurations and post spacing, the pad length on the inside of the post will be the long side. The procedure is also valid in any case where the long side length is on the outside.

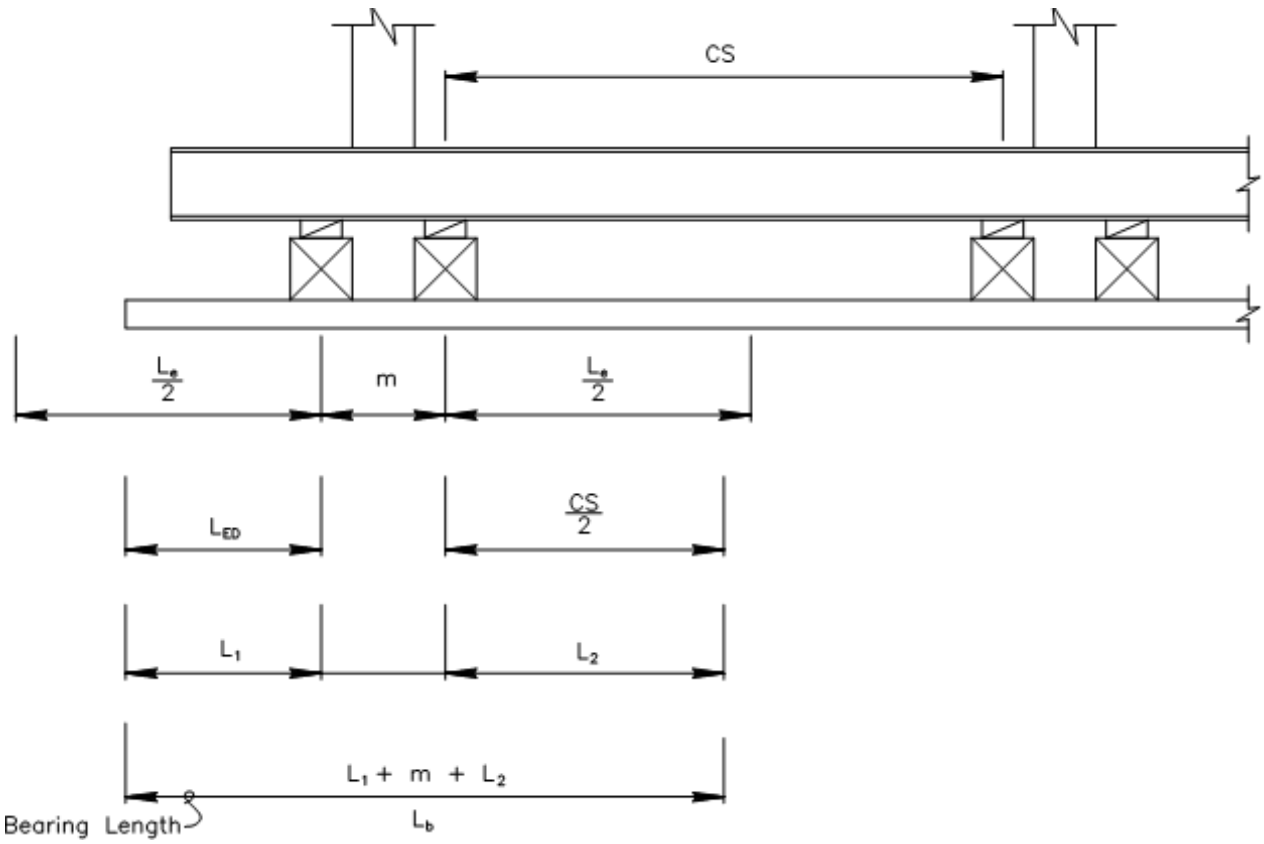

Figure 8-10. Pad at Exterior Post with Double Corbels.

For exterior posts the bearing length can be asymmetrical or symmetrical. Begin with the outside, in this case the left side. Analyze the pad as follows:

1. Calculate the effective length, $\mathbf{L_e}$, of the pad using the SYM formula:

$$\mathbf{L_e} = \mathbf{L_{SYM}} \text{ from equation 8-2.02A-2} \qquad (8\text{-}2.05D\text{-}1)$$

2. The limiting bearing length on the outside, $\mathbf{L_1}$, is determined by:

$$\mathbf{L_1 = \text{ smaller of } \begin{cases} L_{ED} \\ \frac{L_e}{2} \end{cases}} \qquad (8\text{-}2.05D\text{-}2)$$

3. The limiting length on the inside, $\mathbf{L_2}$, is determined by:

$$\mathbf{L_2 = \text{ smaller of } \begin{cases} \frac{CS}{2} \\ \frac{L_e}{2} \end{cases}} \qquad (8\text{-}2.05D\text{-}3)$$

4. <u>Asymmetrical Analysis</u>: If $\mathbf{L_1 \neq L_2}$ the bearing length is asymmetrical. (If the lengths are equal, skip to step 5):

   a. The bearing length, $\mathbf{L_b}$, is the sum of the limiting lengths found in step 3 and step 5c plus the corbel spacing, **m**:

   $$\mathbf{L_b = L_1 + m + L_2} \qquad (8\text{-}2.05D\text{-}4)$$

   b. Calculate the soil pressure, σ_b, using the limiting bearing length, $\mathbf{L_b}$, from step 4a and compare to the allowable soil bearing value. Use equation 8-2.03-1 for σ_b.

   c. Calculate the pad stress, $\mathbf{f_v}$, on the long side due to horizontal shear using the greater of $\mathbf{L_1}$ and $\mathbf{L_2}$ lengths from steps 2 and 3 and $\mathbf{L_b}$ from step 4a. Calculate the stress at a distance, **d**, from the face of the corbel where **d** is the pad thickness. Use equation 8-2.05A(2)-1 for $\mathbf{f_v}$.

5. <u>Symmetrical Analysis</u>: If $\mathbf{L_1 = L_2}$ the bearing length is symmetrical. This is unlikely to occur in actual practice:

   a. The limiting bearing length, $\mathbf{L_b}$, is the sum of the length from Step 1 plus the spacing, **m**:

   $$\mathbf{L_b = L_1 + m + L_2} \qquad (8\text{-}2.05D\text{-}5)$$

   b. Calculate the soil pressure, σ_b, using the limiting bearing length, $\mathbf{L_b}$, from step 5a and compare to the allowable soil bearing value. Use equation 8-2.03-1 for σ_b.

   c. Calculate the pad stress, $\mathbf{f_v}$, due to horizontal shear using the limiting bearing length, $\mathbf{L_b}$, from step 5a. Calculate the stress at a distance, **d**,

from the face of the corbel where **d** is the pad thickness. Use equation 8-2.05A(1)-1 for $\mathbf{f_v}$.

The same general procedure applies when the short side is on the inside of an exterior post.

8-2.06 Analysis of Individual Pads

The procedures for individual pads are similar to those used for continuous pads, as discussed in the following sections.

8-2.06A Analysis of Symmetrical Pads

Figure 8-11, *Symmetrical Individual Pads with Single Corbel,* shows two individual pads where the bearing length is symmetrical about the post centerline. Analyze the pad as follows:

1. Calculate the effective length, $\mathbf{L_e}$, of the pad using the SYM formula:

$$\mathbf{L_e} = \mathbf{L_{SYM}} \text{ from equation 8-2.02A-2} \qquad (8\text{-}2.06\text{A-}1)$$

2. The limiting bearing length, $\mathbf{L_b}$, is determined by:

$$\mathbf{L_b} = \textbf{smaller of} \begin{cases} \mathbf{L_{pad}} \\ \mathbf{L_e} \end{cases} \qquad (8\text{-}2.06\text{A-}2)$$

3. Calculate the soil pressure, σ_b, using the limiting bearing length, $\mathbf{L_b}$, from step 2 and compare to the allowable soil bearing value. Use equation 8-2.03-1 for σ_b.
4. Calculate the pad stress, $\mathbf{f_v}$, due to horizontal shear using the length, $\mathbf{L_b}$, from step 2. Calculate the stress at a distance, **d**, from the face of the corbel where **d** is the pad thickness. Use equation 8-2.04A(1)-1 for $\mathbf{f_v}$.

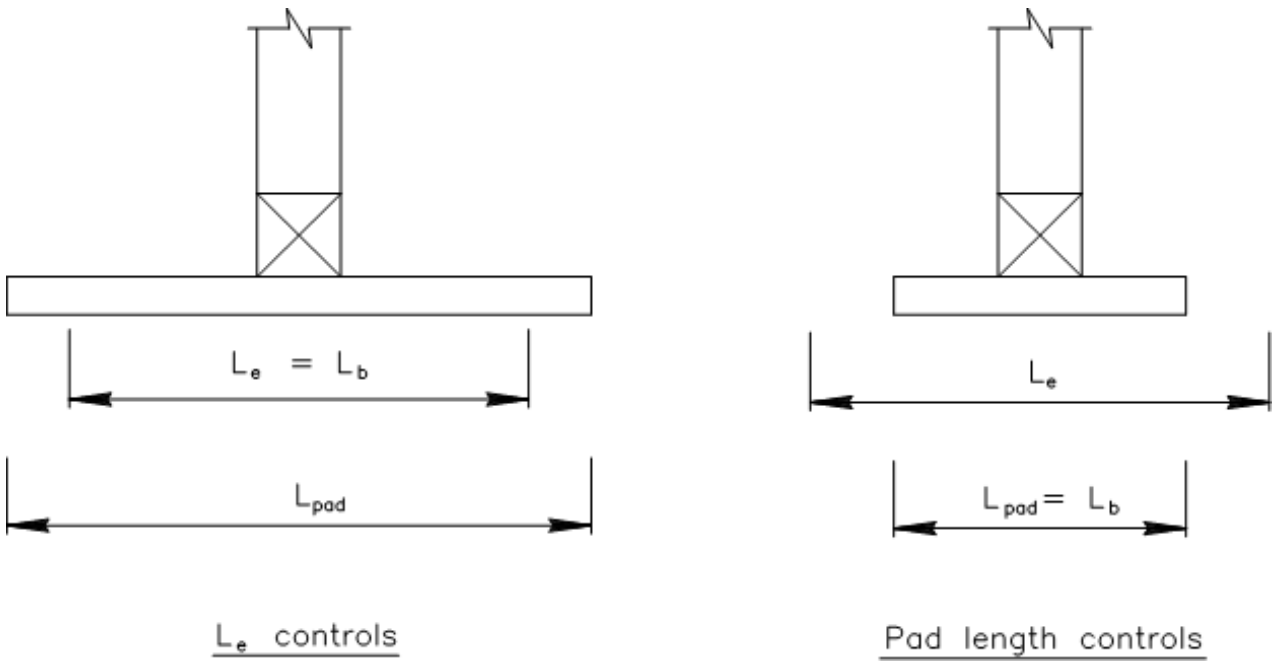

Figure 8-11. Symmetrical Individual Pads with Single Corbel.

8-2.06B Analysis of Asymmetrical Pads

Figure 8-12, *Asymmetrical Individual Pad with Single Corbel,* shows an individual pad where the bearing length is asymmetrical about the post centerline. Analyze the pad as follows:

1. Calculate the effective length, $\mathbf{L_e}$, of the pad using the SYM formula:

$$\mathbf{L_e} = \mathbf{L_{SYM}} \text{ from equation 8-2.02A-2} \qquad (8\text{-}2.06B\text{-}1)$$

2. The limiting bearing length on the short side, $\mathbf{L_1}$, is determined by:

$$\mathbf{L_1} = \textbf{smaller of} \begin{cases} \mathbf{L_{ED1}} \\ \frac{\mathbf{L_e}}{\mathbf{2}} \end{cases} \qquad (8\text{-}2.06B\text{-}2)$$

3. The limiting bearing length on the long side, $\mathbf{L_2}$, is determined by:

$$\mathbf{L_2} = \textbf{smaller of} \begin{cases} \mathbf{L_{ED2}} \\ \frac{\mathbf{L_e}}{\mathbf{2}} \end{cases} \qquad (8\text{-}2.06B\text{-}3)$$

4. Asymmetrical Analysis: If $\mathbf{L_1} \neq \mathbf{L_2}$ the bearing length is asymmetrical. (If the lengths are equal, skip to step 5:)

a. The limiting bearing length, $\mathbf{L_b}$, is determined by:

$$\mathbf{L_b = L_1 + L_2} \qquad \text{(8-2.06B-4)}$$

b. Calculate the soil pressure, σ_b, using the limiting bearing length, L_b, from step 5d and compare to the allowable soil bearing value. Use equation 8-2.03-1 for σ_b.

c. Calculate the pad stress, $\mathbf{f_v}$, on the long side due to horizontal shear using the lengths $\mathbf{L_2}$ from step 3 and $\mathbf{L_b}$ from step 4a. Calculate the stress at a distance, **d**, from the face of the post or corbel where **d** is the pad thickness. Use equation 8-2.04A(2)-1 for $\mathbf{f_v}$. For some asymmetrical loading configurations, the limiting length on the long side, $\mathbf{L_2}$, will be <u>shorter</u> than the limiting length on the short side, $\mathbf{L_1}$, in which case the stress due to horizontal shear will be calculated on the short side.

5. <u>Symmetrical Analysis</u>: If $\mathbf{L_1 = L_2}$ the bearing length is symmetrical:

a. The limiting bearing length is determined by:

$$\mathbf{L_b = L_1 + L_2} \qquad \text{(8-2.06B-5)}$$

b. Calculate the soil pressure, σ_b, using the limiting bearing length, $\mathbf{L_b}$, from step 5a and compare to the allowable soil bearing value. Use equation 8-2.03-1 for σ_b.

c. Calculate the pad stress, $\mathbf{f_v}$, due to horizontal shear using the limiting bearing length, $\mathbf{L_b}$, from step 5a. Calculate the stress at a distance, **d**, from the face of the post or corbel where **d** is the pad thickness. Use equation 8-2.04A(1)-1 for $\mathbf{f_v}$.

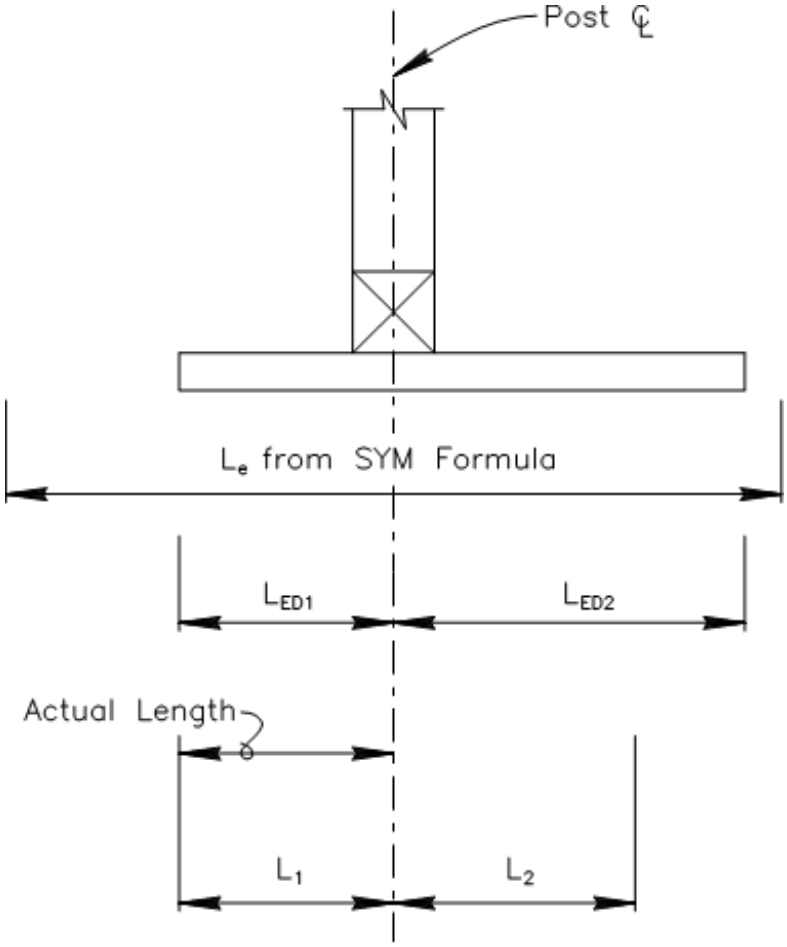

Figure 8-12. Asymmetric Individual Pad with Single Corbel.

8-2.07 Full Width Joints in Continuous Pads

Full width joints (points of pad discontinuity) in continuous pad systems are an important design consideration for continuous pads. The discontinuity at the joints directly affects the ability of a continuous pad to distribute the post load uniformly. The joint locations must be planned in advance and shown on the shop drawings.

Supplemental pads or doubler pads should be provided at joints in continuous pads to achieve uniform load distribution as assumed in the analysis. The supplemental pads and doubler pads must be shown on the shop drawings.

If joints are anticipated in the design, without supplemental pads or doubler pads, the pad must be analyzed as follows:

- A section with only one post between the joint and the end of the pad must be analyzed as an individual pad.

- A section with two or more posts between the joint and the end of the pad must be analyzed as continuous where both the post at the end and the post at the joint are considered exterior posts.
- A section with only one post between two joints must be analyzed as an individual pad.
- A section with two or more posts between two joints must be analyzed as continuous where the posts nearest each joint are considered exterior posts.

8-2.08 Joints in Individual Pad Members

Joints in individual members of continuous pads must be located outside the effective bearing length or at the midpoint between adjacent posts or corbels.

8-2.08A Supplemental Pads

To facilitate construction, some contractors intentionally over design a continuous pad system by providing a greater overall pad width, and a correspondingly greater number of adjacent pad members, than required by theoretical design considerations. The supplemental pads provide redundancy in the pad system.

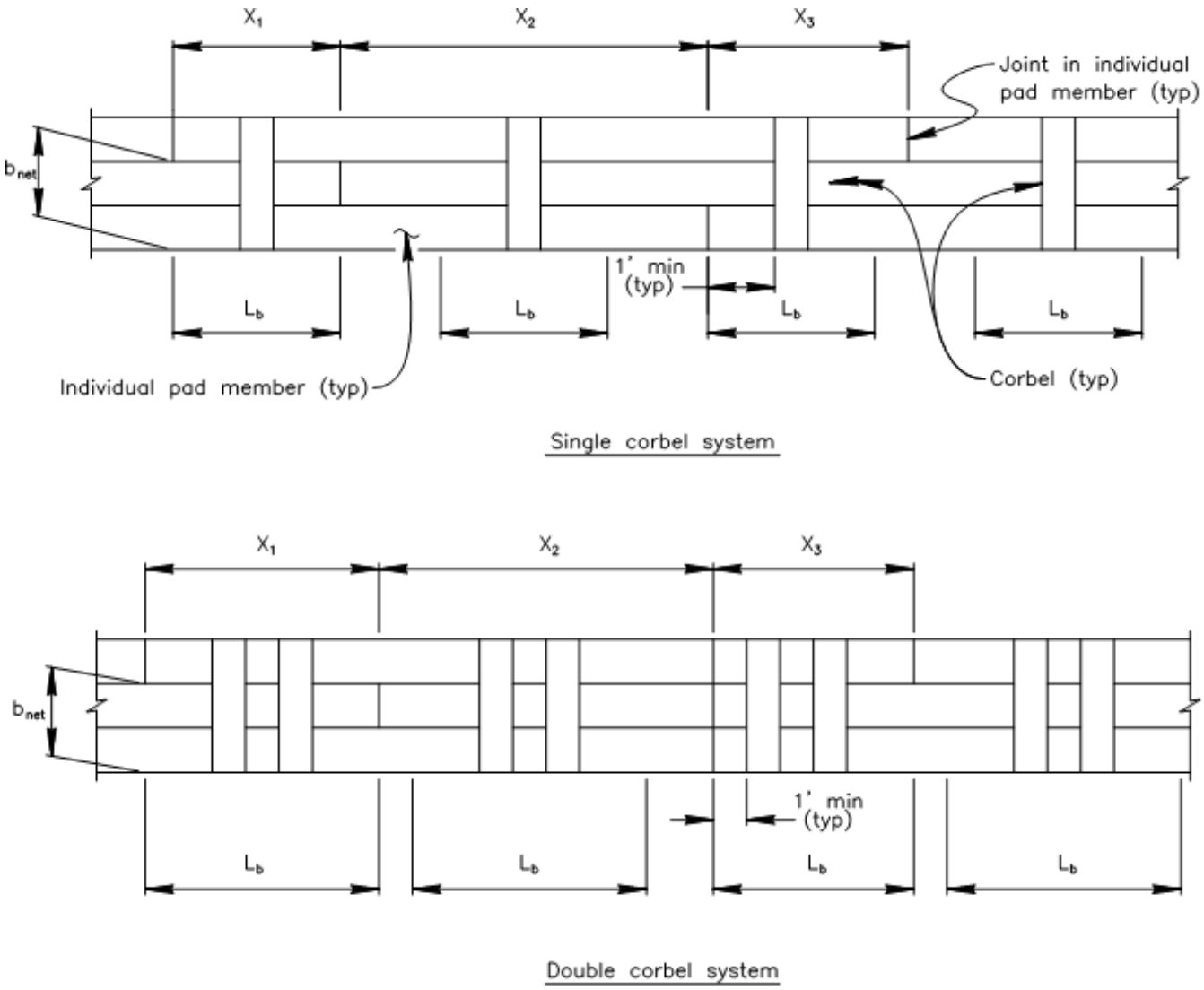

Figure 8-13. Supplemental Pads.

Referring to Figure 8-13, *Supplemental Pads*, when supplemental pads are provided, joints in individual members of the continuous pad system are acceptable, subject to the following restrictions:

- Joints in individual pad members of continuous pads must be staggered a minimum distance, **x**:

$$\mathbf{x_i} \geq \begin{cases} \mathbf{4\ ft} \\ \mathbf{L_b} \end{cases} \qquad (8\text{-}2.08A\text{-}1)$$

where $\mathbf{x_i}$ = Distance between joints in individual pad members

$\mathbf{L_b}$ = Limiting bearing length required by the nearest post or corbel as defined in Sections 8-2.04, *Continuous Pad with Single Corbel,* and 8-2.05,*Continuous Pad with Two or More Corbels*

- Joints in individual pad members of continuous pads are not allowed under single corbels or multiple corbel systems and must be located a minimum of 1-foot away from single corbels and multiple corbel systems.
- At any given joint location of an individual member, the net width of the continuous pad system, $\mathbf{b_{net}}$, may not be less than the pad width, **b**, required if supplemental pads were not used:

$$\mathbf{b_{net} \geq b} \qquad (8\text{-}2.08A\text{-}2)$$

where $\mathbf{b_{net}}$ = The pad width remaining after deducting the width of all individual pad members having joints at the location under consideration

b = Pad width required if supplemental pads were not used

Since supplemental pads are not considered in the analysis, they must be clearly identified as such on the shop drawings.

8-2.08B Doubler Pads

A doubler pad is a second pad placed on top of the main pad. Doubler pads may be used to carry the post load across a joint in the main pad.

Refer to Figure 8-14, *Doubler Pads*, the phantom length, $\mathbf{L_P}$, is the adjusted effective length, $\mathbf{L_{ae}}$, of a symmetrically loaded “phantom” pad designed in accordance with Section 8-2.06, *Analysis of Individual Pads*.

To maintain the integrity of a continuous pad system, doubler pads must conform to the criteria below:

- Placed as an individual pad at a given post location or as a continuous pad between two or more posts.
- Be of the same width and thickness as the main pad.
- If a joint in the main continuous pad falls within the zone established by the phantom length, $\mathbf{L_P}$, for that post, install doubler pads using one of the following options:

- Install an individual doubler pad as shown in Figure 8-14, *Doubler Pads, Case A*. The pad must cover the entire phantom length zone, $\mathbf{L_P}$, and extend a minimum distance of 2 feet past the joint away from the post.
- Install a continuous doubler pad as shown in Figure 8-14, *Doubler Pads, Case B*. The pad must cover the entire phantom length zone, $\mathbf{L_P}$, and extend a minimum distance of 1 foot past the adjacent post.

- If a joint in the main continuous pad falls outside the zones established by the phantom lengths, $\mathbf{L_{p1}}$ and $\mathbf{L_{p2}}$ for the adjacent posts, install the doubler pad as follows:
  - Install a continuous doubler pad as shown in Figure 8-14, *Doubler Pads, Case C*. The pad must extend a minimum distance of 1 foot past both adjacent posts.

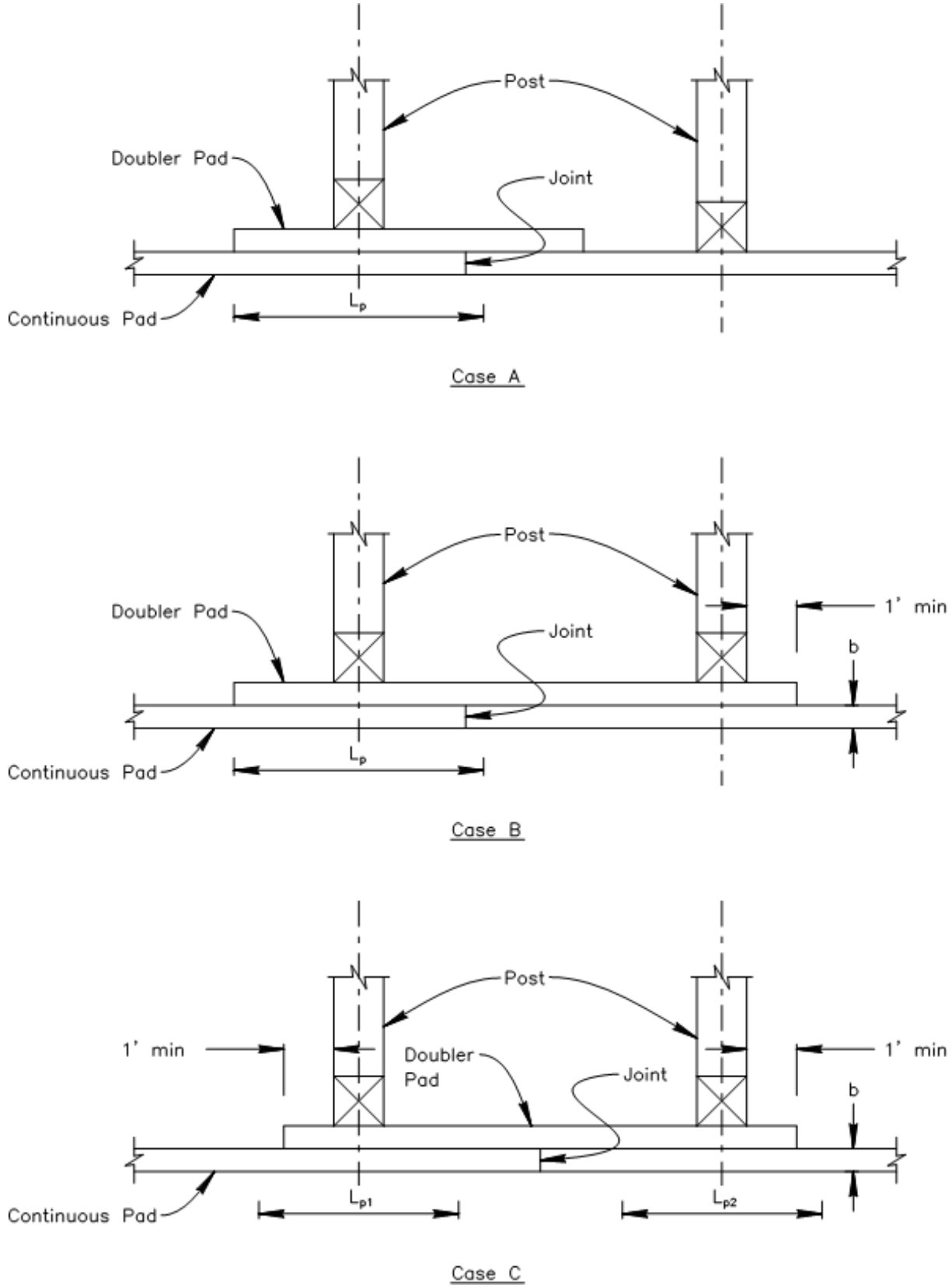

Figure 8-14. Doubler Pads.

8-3 Concrete Pads

Concrete pads may be used as an alternative to timber pads. See Section 7-6, *Concrete Pads,* for concrete pads that are authorized for use on projects in California and for design requirements for other concrete pads that have not been authorized.

8-4 Soil Load Tests and Soil Bearing Values

8-4.01 Introduction

In the case of bridge foundation design, determining the supporting capacity of a given foundation material with sufficient accuracy to ensure an adequate structural design requires a complete foundation investigation by an experienced and capable engineering geologist or soils engineer. Fortunately, the sophisticated approach to foundation design, which is required for permanent work, is generally unnecessary for falsework, because in most falsework designs maximum bearing pressure is applied for only a short period of time and relatively greater settlements may be tolerated.

The *Standard Specifications*, Section 48-2.03B, *Temporary Structures – Falsework – Construction - Foundations,* include a provision which requires the contractor to demonstrate by suitable load tests that the soil bearing values assumed in the falsework design do not exceed the supporting capacity of the soil. This requirement is included in the specifications to further verify the adequacy of the falsework foundation, and the engineer should not hesitate to order a soil load test if he has doubt as to the ability of the foundation material to support the falsework loads. However, soil bearing capacity may in most cases be determined with sufficient accuracy for falsework design purposes by simple static load tests performed by the contractor. Ordinarily, it will not be necessary to employ the services of a private soil laboratory or consultant.

The following information has been prepared to assist the structure representative in those situations where a load test is necessary to verify assumed soil bearing values.

8-4.02 General Information

Soil load tests should be made at the location where falsework will be erected. Bearing pads for the test load must be set on the same material as the falsework footing, and soil moisture content must closely approximate the content expected during falsework use. If the soil moisture content changes due to rain, for example, it is necessary to retest the soil to determine if the soil bearing value has decreased.

The larger the bearing area of the test load pad, the more reliable the results. Pad area should be not less than 2 square feet. For silty or clayey materials, a minimum test load pad area of 3 square feet is preferred.

A load test made on a relatively weak soil, such as clay or silt, will satisfactorily demonstrate the bearing capacity of the surface strata. Greater care should be exercised for tests where small footings are used as these are more critical than larger footings in this type of soil.

A load test made on a thick layer of granular soil overlying a thin weak soil will demonstrate the capacity of the upper layer. It will tell little of the capacity of the lower layer since the test load is small and the pressure on the lower area may be almost negligible since it is spread over a large area.

The effect of a unit load on a small area may not correspond to the effect of the same unit load on a large area. A load of short duration on a plastic soil may not have the same effect as the same unit load on a large area of longer duration. However, this is not true for firm granular soils, as load duration does not affect this type of soil.

8-4.03 Load Test Procedure

As provided in the *Standard Specifications*, Section 48-2.03B, *Temporary Structures – Falsework – Construction – Foundations*, the contractor is responsible to perform load tests when requested by the structure representative. However, the structure representative must determine the suitability of the proposed test for the given site conditions and evaluate the test results. Division of Engineering Services (DES) Geotechnical Services is available for consultation and advice as to the suitability of load tests in a given field situation, as well as interpretation of test results.

To achieve uniformity, a load test as this term is used in the specifications means a test in which both settlement and duration of load are considered.

One simple and satisfactory test method is to apply a gradually increasing load with respect to a fixed time interval, and to record the settlement at the end of each time period. The soil yield point is reached when a small increase in load produces a large increase in settlement. The load at yield point should be divided by **FS = 2** to determine the allowable bearing value.

Table 8-1, *Sample Load Test,* and Figure 8-15, *Sample Load Test – Load vs. Settlement*, present the results of an example load test where the load was increased every 12 hours over a three-day period.

Table 8-1. Sample Load Test.

Time Interval	Total Time	Load	Settlement
(hours)	(hours)	(ksf)	(in)
12	12	2.0	0.2
12	24	4.0	0.6
12	36	5.0	1.2
12	48	6.0	2.0
12	60	6.5	2.8
4	64	7.0	4+

Load test results should be plotted as shown Figure 8-15, *Sample Load Test – Load vs. Settlement*.

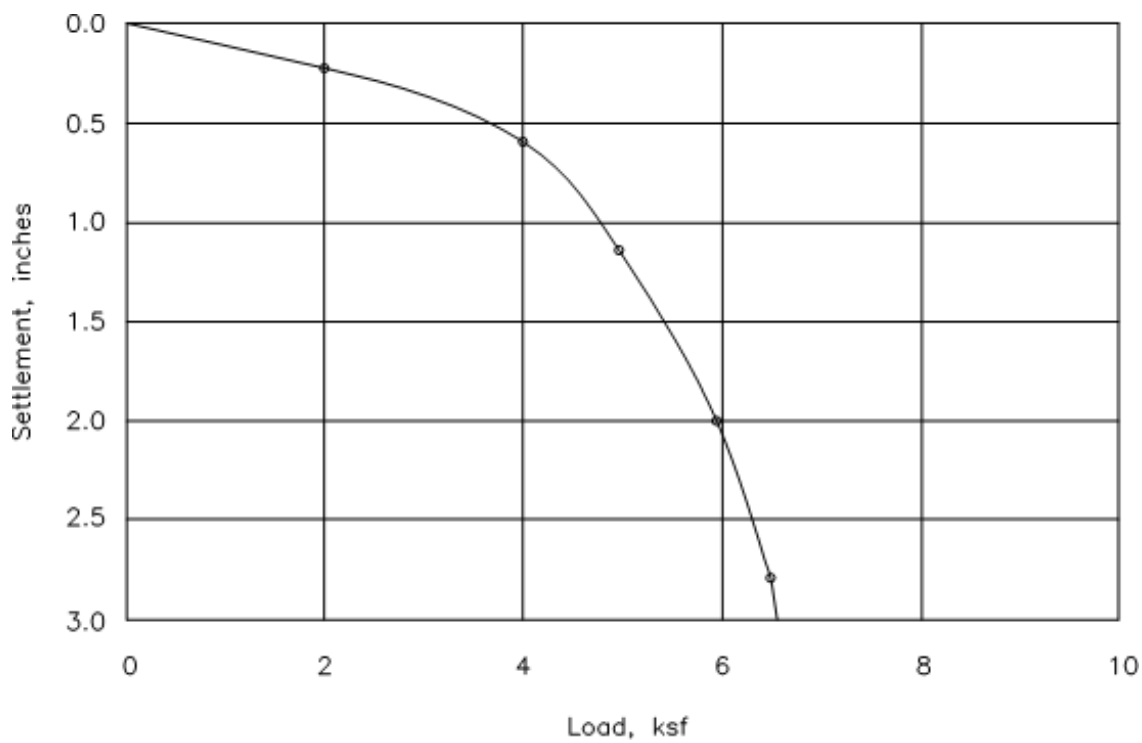

Figure 8-15. Sample Load Test – Load vs. Settlement.

Figure 8-15, *Sample Load Test – Load vs. Settlement,* shows that the soil yield point is about 6 (ksf) for this test, because the increase in the load from 4 to 6 ksf results in a large increase in the settlement. This value should be divided by **FS = 2** to determine the soil bearing value at the ground surface, which in this case is about 3 ksf.

If no clearly defined yield point exists, as will be the case in granular materials, the load which produces a 1-inch settlement may be taken as the ultimate bearing capacity. Again, this value should be divided by **FS = 2** to determine the allowable bearing value.

Referring to Figure 8-16, *Simple Static Soil Load Test Using K-Rail*, sections of K-rail are used as test load on four 1 foot wide by 2 feet long timber pads. The settlement is monitored with an optical level. The load will be incrementally increased until the settlement is about 1-inch, or the yield point is achieved. The yield point is achieved when a small increase in load produces a large increase in settlement.

Figure 8-16. Simple Static Soil Load Test Using K-Rail.

Another method takes into consideration the ratio of the size of the test pad to the size of the proposed pad, along with the contractor's anticipated settlement. In this method the general equation for determining the total load which may be supported by a given soil is expanded to include perimeter shear, as shown by the following relationship:

$$\mathbf{W = A_p = An + Pm} \qquad (8\text{-}4.03\text{-}1)$$

where **W** = Total load (lb)

A = Pad area (ft^2)

p = Allowable soil bearing value in (psf)

n = Compressive stress on the soil column directly beneath the pad (psf)

P = Pad perimeter (ft)

m = Perimeter shear in (plf)

If the ratio of pad perimeter to the pad area is **x**, where **P/A = x**, then the allowable soil bearing stress is:

$$\mathbf{p} = \frac{W}{A} = \mathbf{mx} + \mathbf{n} \qquad (8\text{-}4.03\text{-}2)$$

Values of **m** and **n** are found by test loading two or more pads having different areas and perimeters. The load which produces the contractor's assumed pad settlement is taken as the allowable stress. See Appendix D, *Example Problems*, Example 23, *Soil Bearing Load Test*.

8-4.04 Underlying Weak Strata

Test results, as discussed thus far, give only an indication of the allowable soil bearing values at the surface. If a weak underlying stratum exists, as indicated in the log of test borings, consideration should be given as to whether this stratum will support the falsework load without excessive settlement.

An assumption can be made that the load is spread with the depth at a 1:2 (H:V) slope as shown in Figure 8-17, *Load Dispersion to Weakest Soil Strata*.

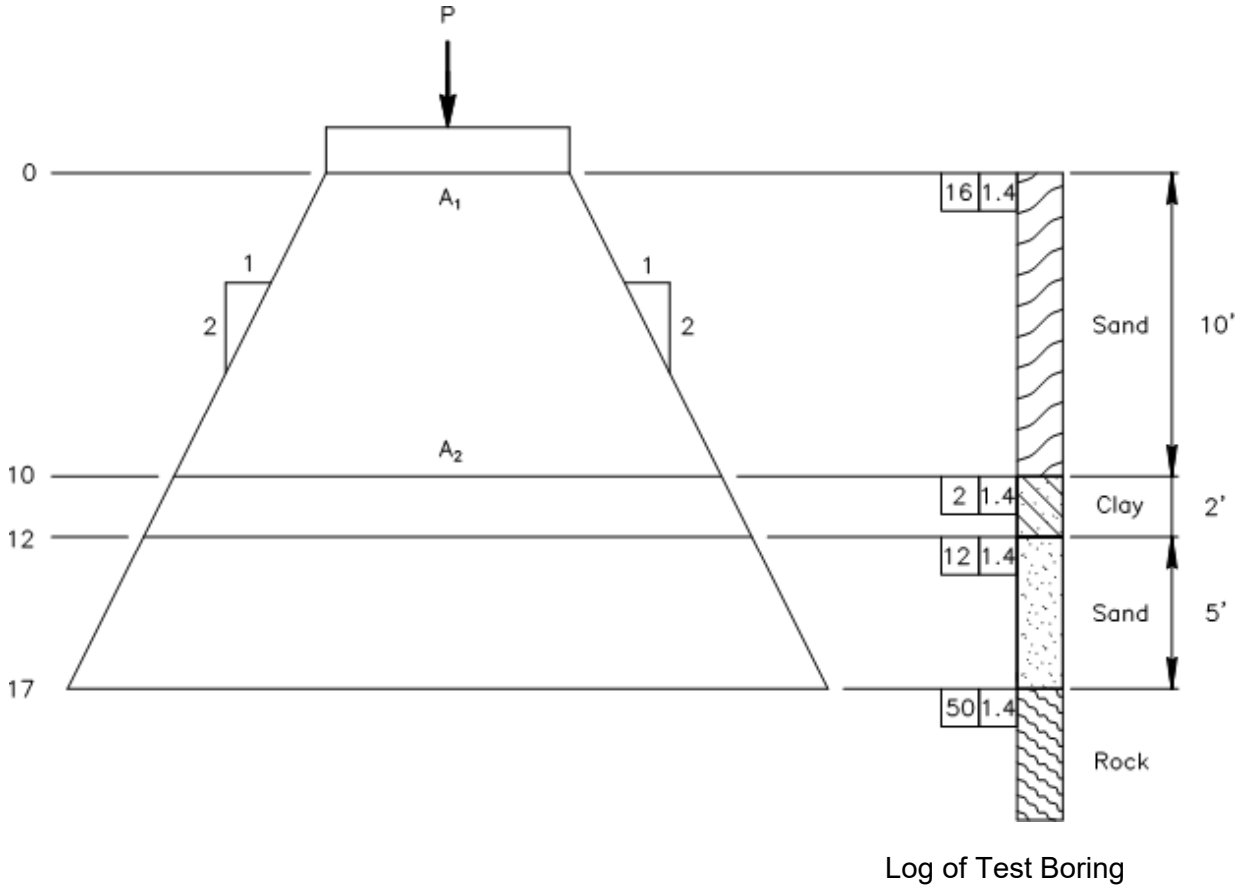

Figure 8-17. Load Dispersion to Weakest Soil Strata.

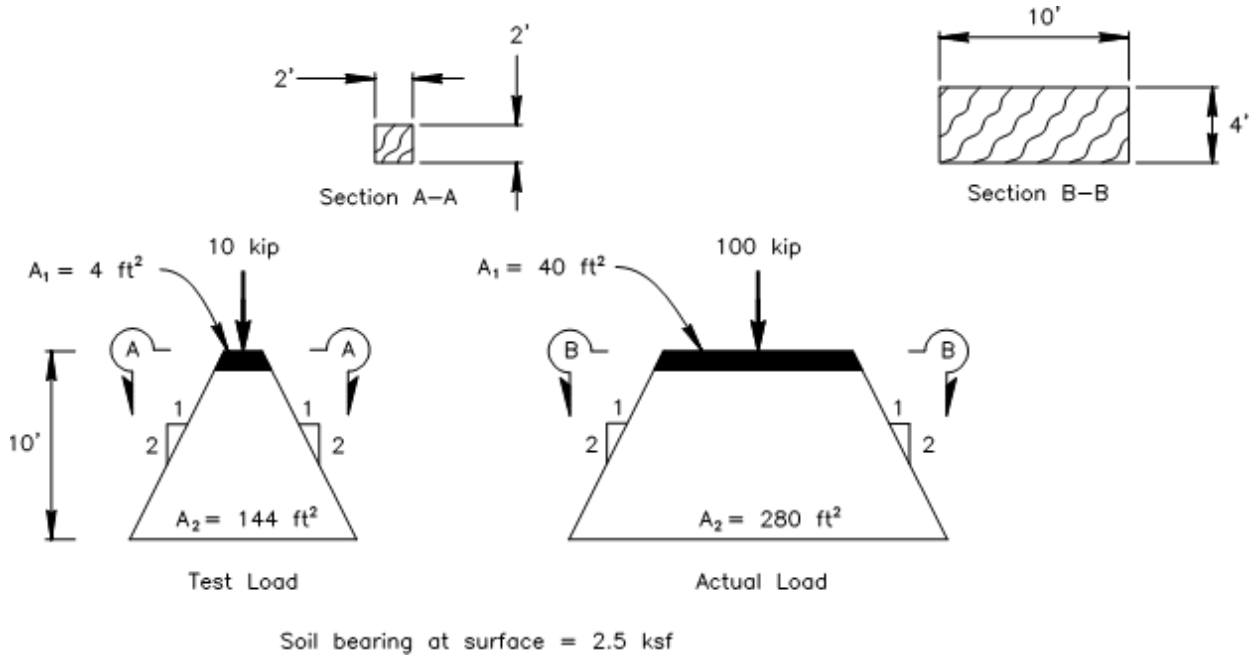

Figure 8-18. Simple Static Soil Load Test.

Figure 8-18, *Simple Static Soil Load Test,* shows a test load and an actual load spread onto the top of a weak strata 10-feet below. The figure provides the following information:

- The soil pressure at the surface is 2.5 ksf for both the test and the actual pad.
- The pressure on the weak underlying strata in the test load is 0.069 ksf, a reduction of 36:1 due to load spreading.
- In the actual condition the pressure is 0.36 ksf, a reduction of only 7:1, and this pressure may be more than the weak strata can safely support.

To assist with the analysis, charts showing allowable soil pressure for sandy and clayey soils are shown in Figure 8-19, *Allowable Bearing on Sandy Soils,* and Figure 8-20, *Allowable Bearing on Clayey Soils*, respectively. These charts give a general idea of the allowable bearing, based on soil classification.

8-4.05 Settlement

The anticipated settlement of falsework is limited to 1-inch by the *Standard Specifications*, Section 48-2.02B(1), *Materials – Design Criteria – General*. The engineer reviewing the shop drawings must be able to assess the probability that a given settlement, as predicted by the contractor, will actually occur. The general statements below may help in predicting these settlements:

- Granular Material: The maximum settlement will occur under the load as it is applied and is usually small in magnitude.
- Silt and Fine Sand: A large part of the settlement occurs as the load is applied. More occurs as the water is squeezed out under long-term loading. If the water table rises, a “quick” condition may result with floatation of the fine grains and a resulting settlement increase at this later date.
- Clay: Part of the consolidation occurs as the load is applied, but the rate of consolidation decreases with time. Settlement may also occur due to drying out of clay in the summer. All settlement is due to a squeezing out or loss of moisture in the clay.

8-4.06 Soil Bearing Values

In general, allowable soil bearing capacity in California varies from:

$$\mathbf{2000psf \leq p \leq 4000psf} \qquad (8\text{-}4.06\text{-}1)$$

where **p** = Allowable soil bearing capacity

However, there are instances where the soils are very weak, e.g. bay mud, peat, and wetlands. In such instances, contractors may elect to use one of the following options:

- Design the pads for the low soil bearing capacity and settlement limitation.
- Implement remedial measures, such as soil stabilization or surcharging, to enhance soil bearing capacity.
- Design the falsework with pile foundation.

The engineer reviewing the shop drawings must use the available resources to verify that the contractor has used good engineering basis to assume an allowable soil bearing capacity for the falsework design. The available resources are for example:

- Log of test boring in the contract plans.
- Figure 8-19, *Allowable Bearing on Sandy Soils,* and Figure 8-20, *Allowable Bearing on Clayey Soils.*
- Geotechnical Services.

The structure representative should order a soil load test if there is any doubt as to the ability of the foundation material to support the falsework loads. Some reasons to request a load test are listed below, but are not limited to:

- Relatively high soil bearing capacity specified on the shop drawings.
- Poor compaction of the soil bearing the falsework load.
- Inconsistency in the type of import fill material placed.

Soil tests performed prior to a rain storm may not be valid after the storm, for example if water puddles around the pads. The same is true if water puddles around the pads for any other reasons such as a water pipe break or curing water leakage.

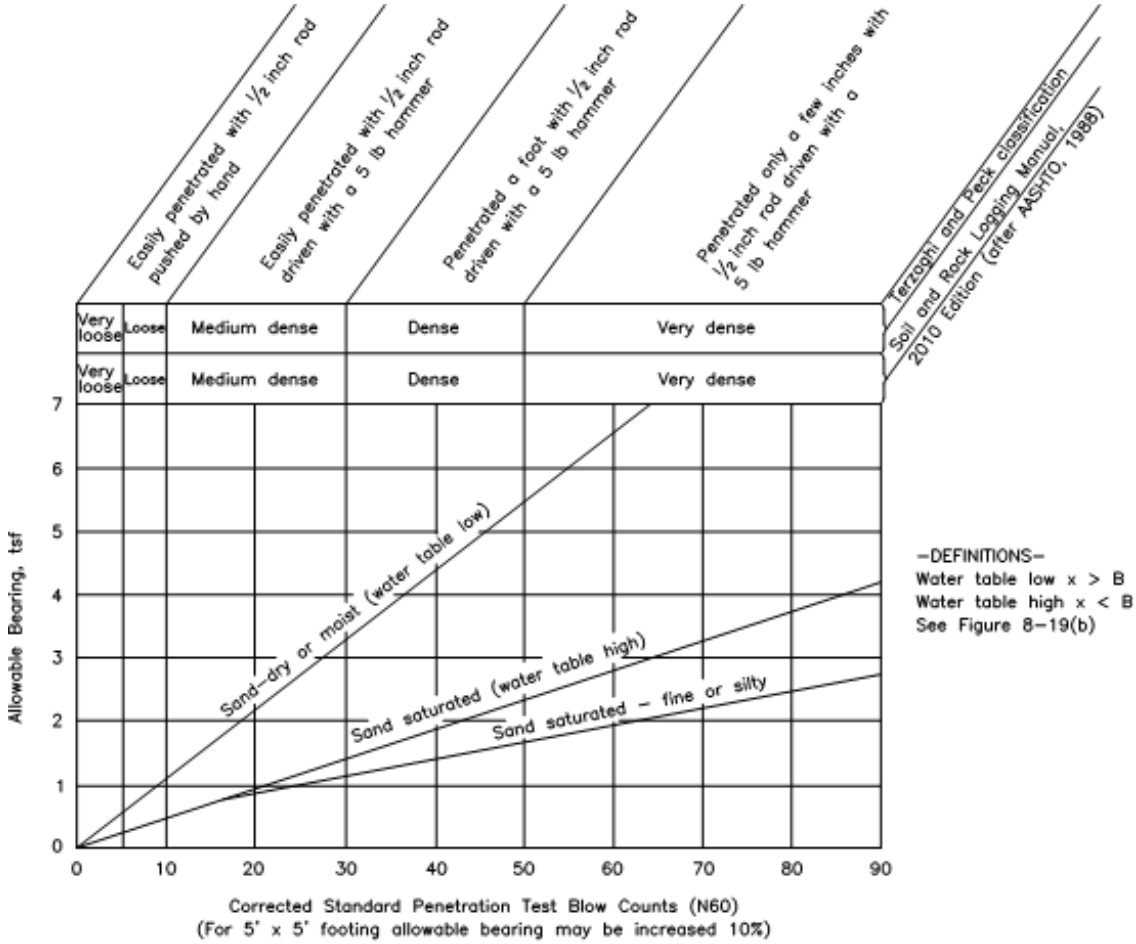

(a) Allowable soil bearing versus corrected standard penetration test blow count

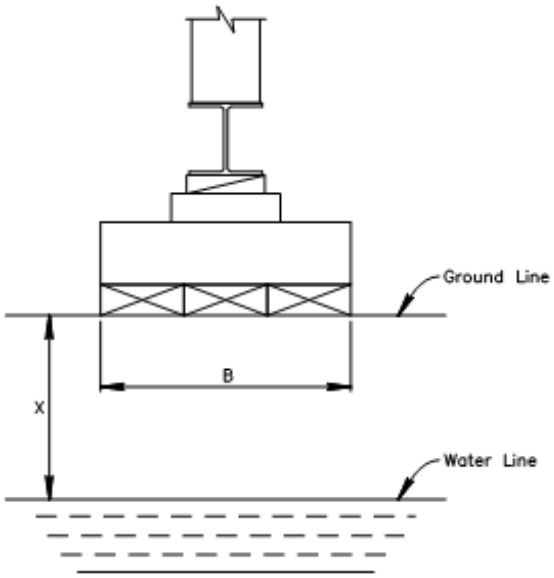

Notes for Figure 8-19:

1. Based on factor of safety of 3.00 and settlement of <1 inch (footings 10' x 10')
2. It should not be used for footings on slopes
3. It was developed assuming uniform underlying soil

Major factors affecting bearing capacity:

1) Position of water table
2) Density of sand
3) Width of footing "B"

(b) Water table definition

Figure 8-19. Allowable Bearing on Sandy Soils.

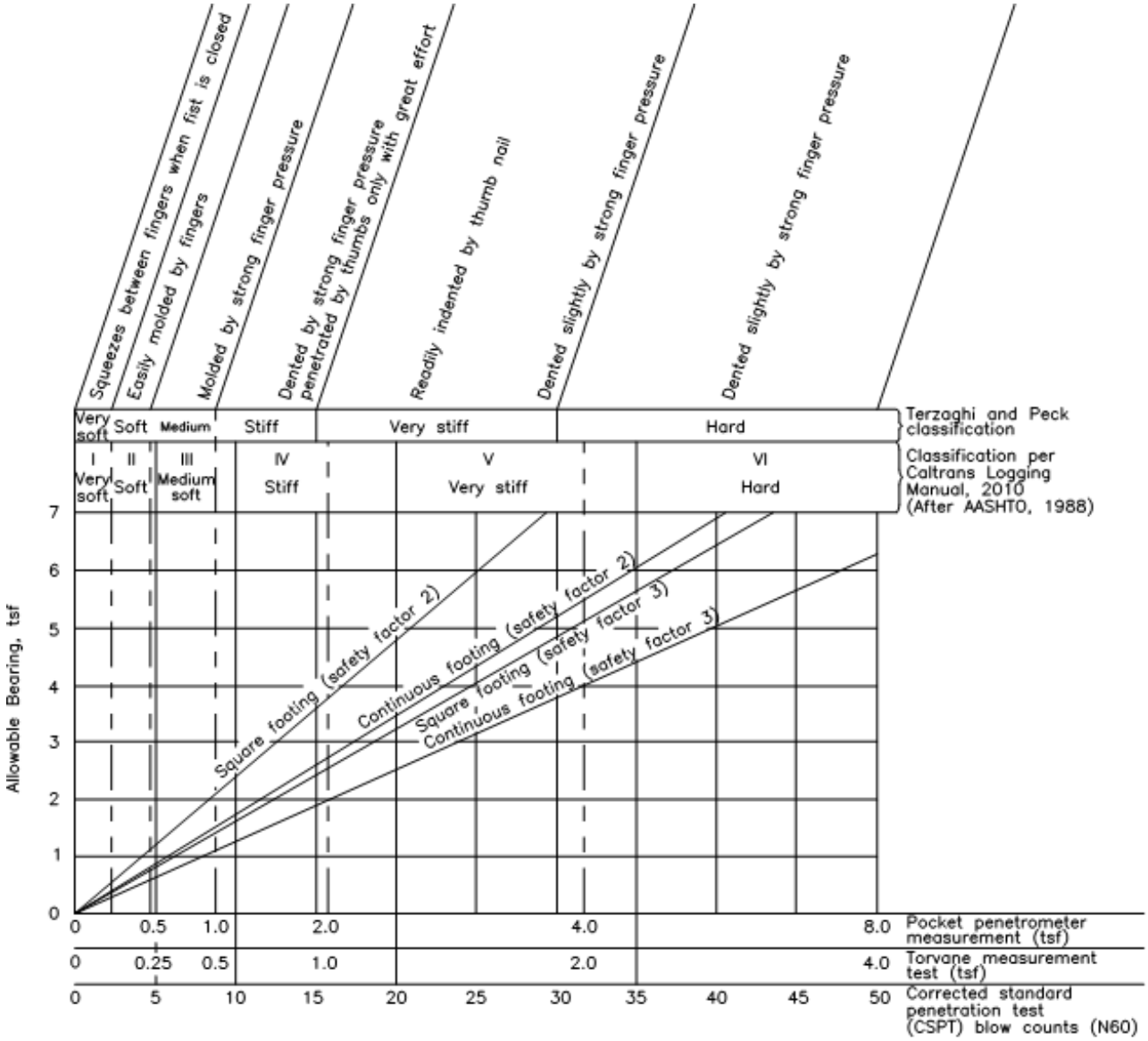

Bearings as given above will generally be conservative for clayey soils

Notes:

1. Weak strata at some distance below footings may, in some cases, cause more settlement than soil layers immediately below the footings
2. For the same unit pressure, large footings settle most. This is particularly so where clay strata are involved
3. Greatest settlement may gnerally be expected at centers of loaded areas
4. Shear failures are most apt to occur when:
   1) Footings are small
   2) Settlements are large

Settlements tend to increase with the following:

1) Softness of the clayey material
2) Thickness of the compressible strata
3) Closeness of clay stratum to ground surface
4) Amount proposed loading exceeds past loading
5) Width of footing or loaded area
6) Height of water table
7) Liquid limit

Figure 8-20. Allowable Bearing on Clayey Soils.

8-5 Corbels

8-5.01 Introduction

Corbels are short beams used to distribute the post load or lower cap load across the top of pads.

Corbels must extend across the full width of the pad even though extension of the corbel to the outside of the pad may not be needed by theoretical design considerations, but it prevents cross grain bending in the pads.

The procedure for analyzing corbels is based on the following assumptions:

- The post load is applied symmetrically to the corbel and is uniformly distributed across the full width of the pad. The assumed symmetry may not be valid in the case of a continuous pad system where one or more supplemental pads are used to facilitate joint location. However, assuming a symmetrical load distribution gives conservative results when supplemental pads are used, and the assumption greatly simplifies the calculations.
- The corbel acts as a cantilever beam when resisting the load applied by the pad.
- For timber corbels, the point of fixity of the cantilever beam and the point of maximum bending moment is located mid-way between the centerline and outside face of the post, i.e. the 1/4 point of the post.
- For steel beam corbels, the point of fixity of the cantilever beam and the point of maximum bending moment is located at outside face of the post.
- If a round post is used, the post width to be used in the analysis is the length of the side of an equivalent area square post.

8-5.02 Timber Corbels

Figure 8-21, *Timber Corbel Flexure and Shear Dimensions,* shows a typical timber corbel system where the post is rectangular. Analyze the corbel as follows:

- Calculate the perpendicular-to-grain bearing stress of the corbel at the interface between post and corbel. If the applied stress exceeds the allowable stress, the system must be redesigned. The following redesign options may be used:
    - Reduce the post load.
    - Distribute the post load over a larger bearing area using a properly sized steel plate. When a steel plate is used, the analysis assumes that the post width is numerically equal to the length of the steel plate.

- Calculate the shear at a distance from the face of the post equal to the depth of the corbel **d**. Use the length $\mathbf{L_H}$ for the length of the distributed soil load for the shear calculation. Calculate the horizontal shearing stress at this location, see Section 5-2.04C, *Horizontal Shear*, and compare to the allowable horizontal shearing stress.
- Calculate the bending moment and the bending stress, see Section 5-2.04B, *Bending and Deflection*, and compare to the allowable bending stress. Use the length $\mathbf{L_f}$ as the length of the cantilever.

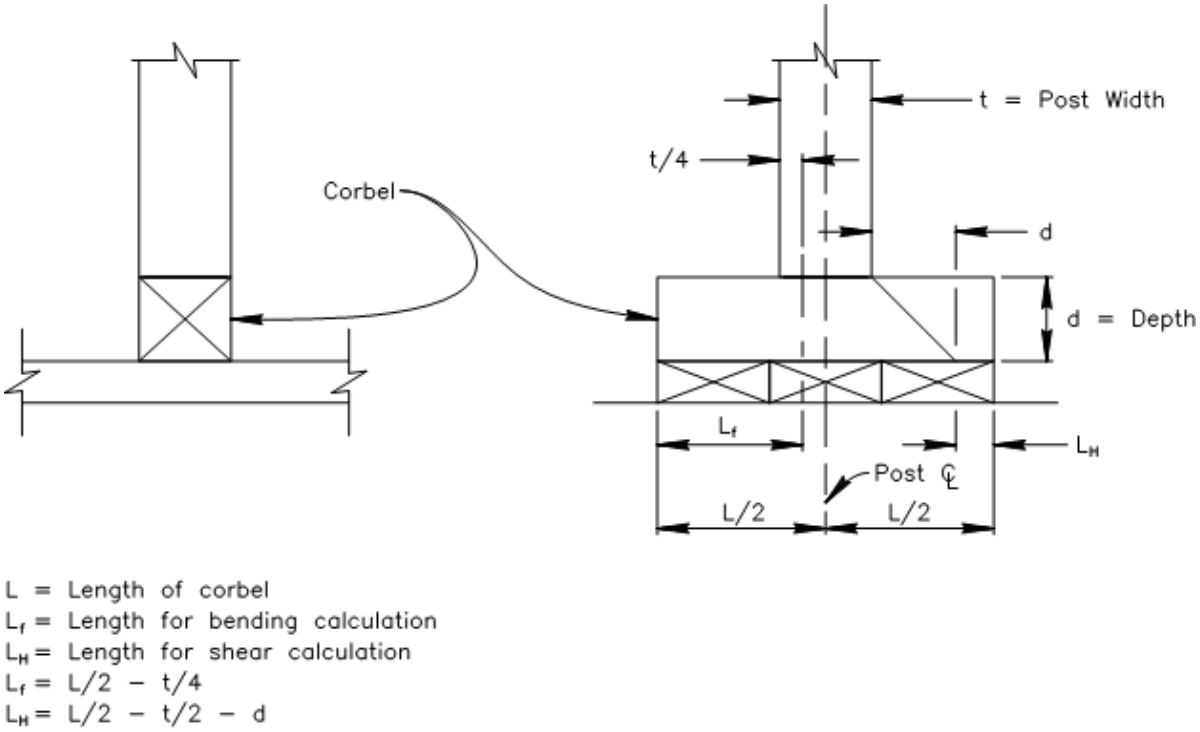

Figure 8-21. Timber Corbel Flexure and Shear Dimensions.

8-5.03 Steel Corbels

For steel beam corbels, analyze the corbel as follows:

- Calculate the web yielding and web crippling stress under the post using the total post load, see Sections 5-4.07, *Web Yielding,* and 5-4.08, *Web Crippling*. If the calculated stress exceeds the allowable stress, the system must be redesigned. The following redesign options may be used:
    - Reduce the post load
    - Increase the bearing length
    - Increase the web thickness

  - Stiffen the web
- Calculate the shear stress on the beam web using 1/2 of the total post load.
- Calculate the bending moment and the bending stress. For steel beam corbels, the cantilever length is measured from the face of the post.
- Calculate the perpendicular-to-grain bearing stress in the pad at the interface between corbel and pad.

8-6 Pile Foundations

8-6.01 Introduction

In general, pile foundations will be required whenever site conditions preclude the use of timber or concrete pads. Typically, piles are used to support:

- Falsework over water.
- Falsework and heavy duty shoring where leg loads are high.
- Any type of falsework where differential settlement must be prevented.
- Any type of falsework where a conventional foundation is not feasible because of poor soil conditions.

Timber, steel, precast concrete, and cast-in-drilled-hole (CIDH) concrete piles may be used for falsework foundations. Steel piles are the most common type because they are easy to drive in most soil conditions, have a higher load carrying capacity than timber piles, and are more cost efficient than concrete piles. CIDH piles are rarely used due to the high associated cost. CIDH piles and precast concrete piles are not discussed in this manual.

Piles that are cut off and capped near the ground line will carry the superstructure load by braced falsework bents erected on top of the pile cap. In this configuration the piles are supported throughout their length and therefore are only subjected to axial loading. See Figure 8-22, *Piles Capped Close to Ground*.

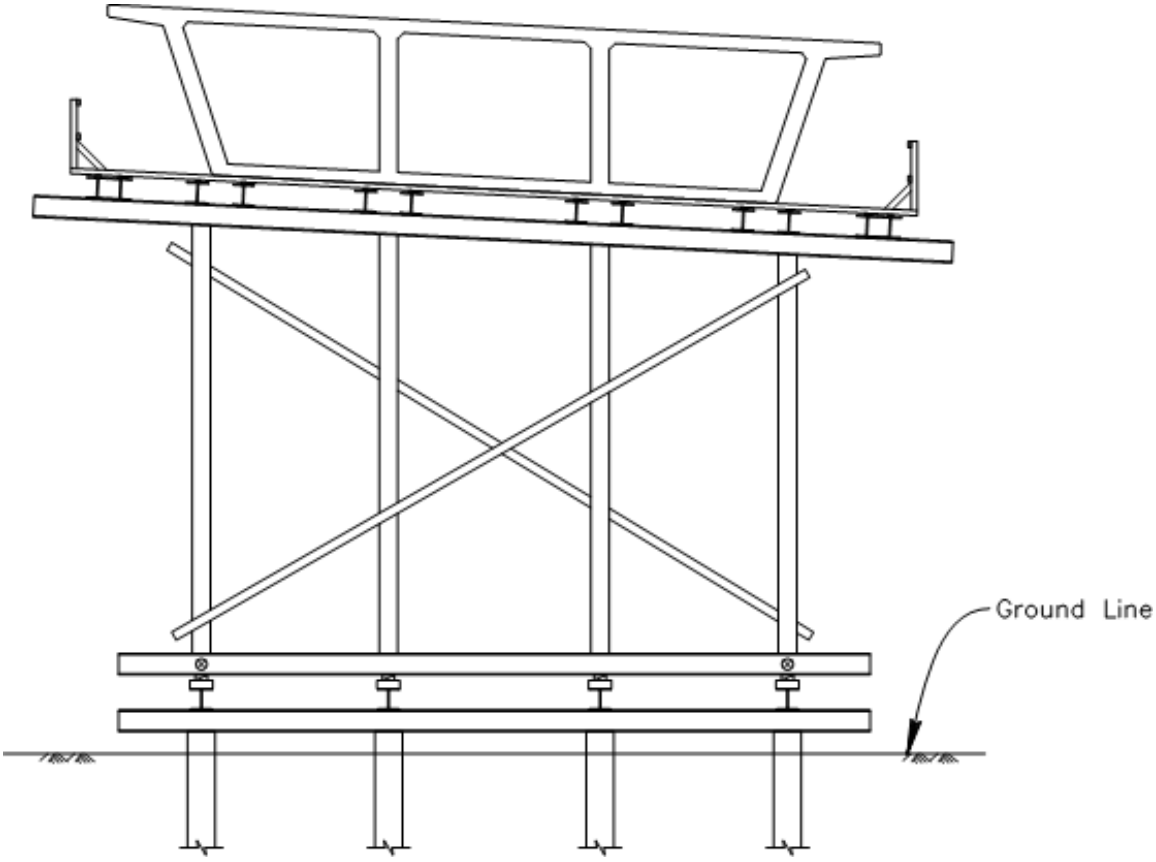

Figure 8-22. Piles Capped Close to Ground.

Site conditions may dictate the use of pile bents, where the piles extend above the ground surface. Such bents may be unbraced, partly braced or fully braced depending on site conditions, see Figure 8-23, *Pile Bent*.

Bracing systems are very effective in resisting horizontal forces in pile bents. When investigating the ability of the bracing to prevent collapse, the horizontal force produced by vertical load eccentricity (pile lean) must be considered. When investigating overturning stability, any theoretical uplift resistance provided by the piles must be neglected.

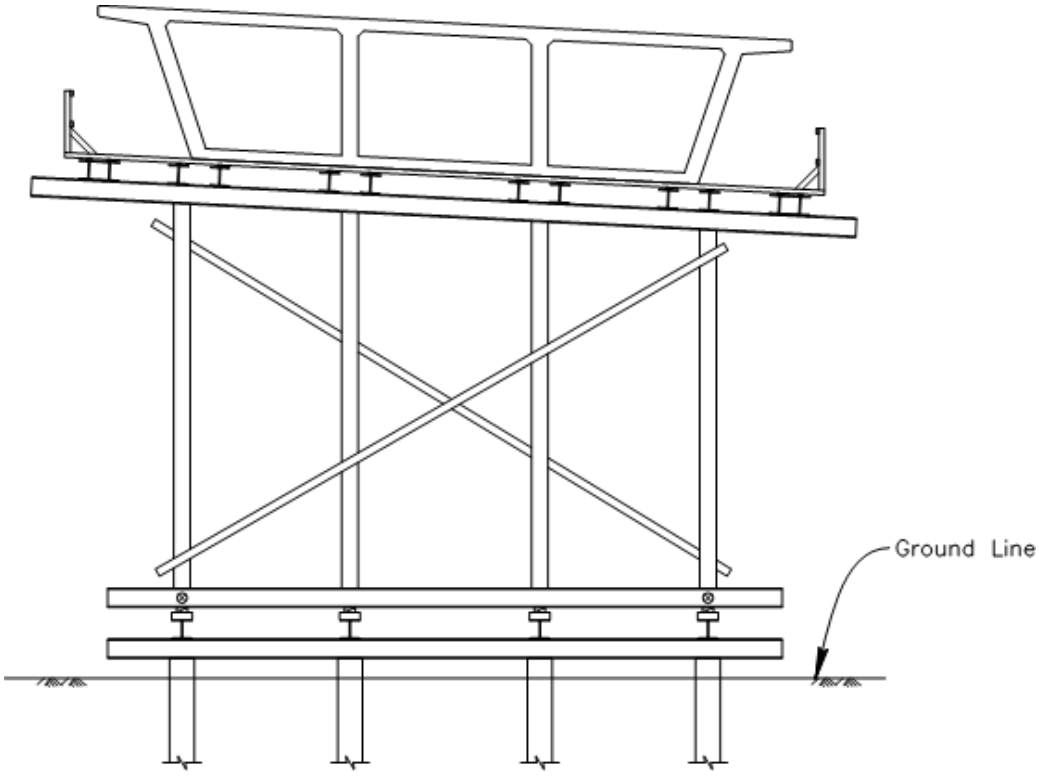

Figure 8-23. Pile Bent.

8-6.02 Pile Resistance

Piles that are plumb and properly installed per the authorized shop drawings may be considered as capable of carrying a load equal to the resistance value given by the equation in *Standard Specifications*, Section 49-2.01A(4)(c), *Piling – Department Acceptance*, but not more than 45 tons for timber piles. The actual nominal pile resistance must be at least twice the falsework design load, i.e. **FS = 2.0**, see *Standard Specifications*, Section 48-2.03B, *Temporary Structures – Falsework – Construction – Foundations*.

Piles which are cut off and capped near the ground line may be considered as laterally supported against buckling. See Figure 8-22, *Piles Capped Close to Ground*. The load carrying capacity of pile bents can be taken as equal to the driving resistance, but not more than the pile can carry when analyzed as a short column. See Figure 8-23, *Pile Bent*.

8-6.03 Steel Piles in Pile Bents

This manual does not include procedures for reviewing steel piles in pile bents. Therefore, engineering judgement is needed, and it is recommended that the reviewer consults DES Geotechnical Services, especially for pile bents in creeks, rivers, or bay waters. The procedures in Section 8-6.04, *Timber Piles in Pile Bents*, can be used as a guide for review of steel piles, however, these procedures were developed empirically

from an evaluation of the load carrying capacity of timber piles, and therefore are not directly applicable to steel pile bents.

Evaluating the adequacy of steel pile bents involves the consideration of factors that are not subject to precise analysis; therefore, some subjective judgment is required. In view of this, the shop drawings should not be authorized until the engineer is satisfied that the design is stable under all anticipated loading conditions.

Referring to Figure 8-23, *Pile Bent*, depending on the design, some frame stiffness may be developed by the connection at the top of the pile. For example, if the piles are welded to a steel cap, the connection will be fixed; however, the degree of rotational restraint provided by the cap and the extent to which the fixed connection will influence pile stiffness are not readily determined. In view of the indeterminate nature of the problem, it is acceptable to simplify the system and assume the connection as pinned at the top when performing the frame analysis. However, if the contractor is relying on the fixed connections a more rigorous analysis is necessary.

Round steel piles are well suited as piles in pile bents because they have the same section modulus in all directions and hence have a more stable behavior when pulled into place or when loaded at various angles. H-piles, however, have a different section modulus depending upon the direction of the load, and therefore, have different stiffness depending upon the orientation of the pile. In addition, the H-piles are prone to buckling when pulled into place or when loaded at certain angles. Therefore, if H-piles are used in pile bents, the orientation must be clearly shown on the shop drawings and the installation in the field must match the shop drawings.

8-6.04 Timber Piles in Pile Bents

The load carrying capacity of timber piles in a pile bent is a function of many variable factors. For example, the type of soil, the depth at which the piles are fixed in the ground, the deviation of the piles from their theoretical position, and the contribution to system stability provided by diagonal bracing all affect the ability of timber pile bents to resist the applied loads, and all must be considered in the analysis.

Furthermore, the procedures used to evaluate pile capacity differ from those used in the analysis of other components of the falsework system because the pile analysis must consider the combined effect of vertical loads, horizontal loads, and eccentric loading conditions to ensure that allowable stresses are not exceeded.

The factors that influence pile capacity are discussed in detail in the following sections.

8-6.04A Required Pile Penetration

The procedure for timber pile bents is valid only if the piles penetrate the subsurface soils to the depth necessary to develop a point of fixity in the embedded pile. For a driven pile, the point of pile fixity is the location below the ground surface where the pile shaft may be considered as fixed against rotation when it is subjected to a bending moment.

Other factors being equal, the depth of embedment needed to develop pile fixity is a function of soil type. Soft soils require a deeper penetration than firm soils, but determining the actual penetration required is a matter of engineering judgment.

The ratio of the depth of pile penetration to the height of the pile above ground, **D/H,** is the criterion to ascertain whether a given pile is embedded deeply enough to develop a point of fixity. For the stress analysis, piles are considered fixed at the predicted depth below the ground surface when **D/H ≥ 0.75**.

When **D/H < 0.75** the piles are not embedded deeply enough to develop the fixed condition; therefore, they will rotate to a degree when loads are applied. The amount of rotation is a function of the restraint developed by the actual pile embedment. The degree of restraint decreases and rotation increases as the **D/H** ratio becomes smaller. When rotation occurs, bending stresses are reduced but overall pile capacity is reduced as well, and in a disproportionate amount.

The procedure to estimate pile capacity when the embedded length is insufficient to develop the fixed condition is discussed in Section 8-6.06, *Field Evaluation of Pile Capacity*.

As noted above, the analysis method developed by SC assumes that pile embedment is sufficient to develop the fixed condition. This is not an unreasonable assumption because, for most soil types, the penetration needed to obtain bearing will develop pile fixity as well. However, while this assumption may be true in general, it is not true in all cases; therefore, when timber pile bents are to be used, the authorization of the design is contingent on the piles actually penetrating to the depth assumed in the analysis. The condition should be noted on the shop drawings. The reason for this requirement is that a pile may achieve bearing before the fixity in the pile is achieved.

8-6.04B Point of Pile Fixity

The depth to the point of fixity is a function of soil stiffness and the diameter of the pile at the ground line. The relationship is:

$$\mathbf{y = kd} \qquad \text{(8-6.04B-1)}$$

where **y** = Distance (depth) from ground line to the point of fixity

k = Soil stiffness factor

d = Diameter of the pile at the ground line

A widely accepted rule-of-thumb assumes that point of fixity is:

$$\mathbf{y} = \begin{cases} \mathbf{4d}, & \text{for medium hard to medium soft soil} \\ \mathbf{6d}, & \text{max, for soft yielding soils, such as bay mud} \end{cases} \qquad (8\text{-}6.04B\text{-}2)$$

These assumptions have been verified by load tests and are satisfactory for most soil types.

Consideration may be given to raising the assumed point of fixity when piles are driven into very firm soils; however, caution is advisable because the driving of piles into any type of soil will tend to disturb the top few feet of the surrounding material.

An alternative approach uses information obtained from the Log of Test Boring (LOTB) sheets in the project plans. The average of the penetrometer readings for the portion of the log equal to the depth of pile penetration, adjusted by eliminating spikes, gives an indication of the relative soil stiffness. With this average value, a soil stiffness factor can be obtained graphically from Figure 8-24, *Soil Factor Chart*. Although this method may appear sophisticated, it does not ensure a more accurate result. As a practical approach, use of equation 8-6.04B-2 will simplify analysis without sacrificing accuracy except in the case of very soft soils.

8-6.04C Driving Tolerance

Unless the piles are driven within the tolerance shown on the shop drawings, it will be necessary to pull the top of each pile into line before setting the pile cap. Pulling the top of a pile from its driven position to its final position under the cap produces a bending moment, which must be, considered in the analysis. If the piles are appreciably out of line, the resulting bending stress may reduce pile capacity substantially.

Similarly, any deviation of the top of the pile in its final position from a vertical line through the point of pile fixity will result in an eccentric loading condition that also reduces pile capacity. Vertical load eccentricity, often referred to as pile lean, does not necessarily occur because a pile is pulled. It is an independent loading condition that occurs whenever the top of a pile in its final position under the cap is not centered around a vertical line through the point of pile fixity.

Pile pull and pile lean are independent loading conditions. Both conditions have the potential to reduce pile capacity substantially, and the adverse effect of both conditions must be considered in the design of timber pile bents. To ensure that they are

considered, the *Standard Specifications*, Section 48-2.01C(2), *Falsework -- Submittals – Shop Drawings,* require the allowable driving tolerance for both conditions (maximum pull and maximum lean) to be shown on the shop drawings.

8-6.04D Soil Relaxation Factor

The force required to pull the top of a pile from its driven position to its final position under the cap causes the pile to bend, which in turn produces pressure on the soil below the ground surface. With time, the soil will yield under this pressure, allowing the pile to straighten to a degree. The yielding of the soil is called soil relaxation. As the soil yields or relaxes, it lowers the point of fixity, which in return lengthens the section of the pile above the point of fixity and reduces the bending stress proportionally.

The effect of soil relaxation is accounted for by a soil relaxation factor. The value of the soil relaxation factor in a given situation is a function of soil type and the length of time between the initial pull and application of the vertical load. These relationships are shown graphically in Figure 8-24, *Soil Factor Chart*.

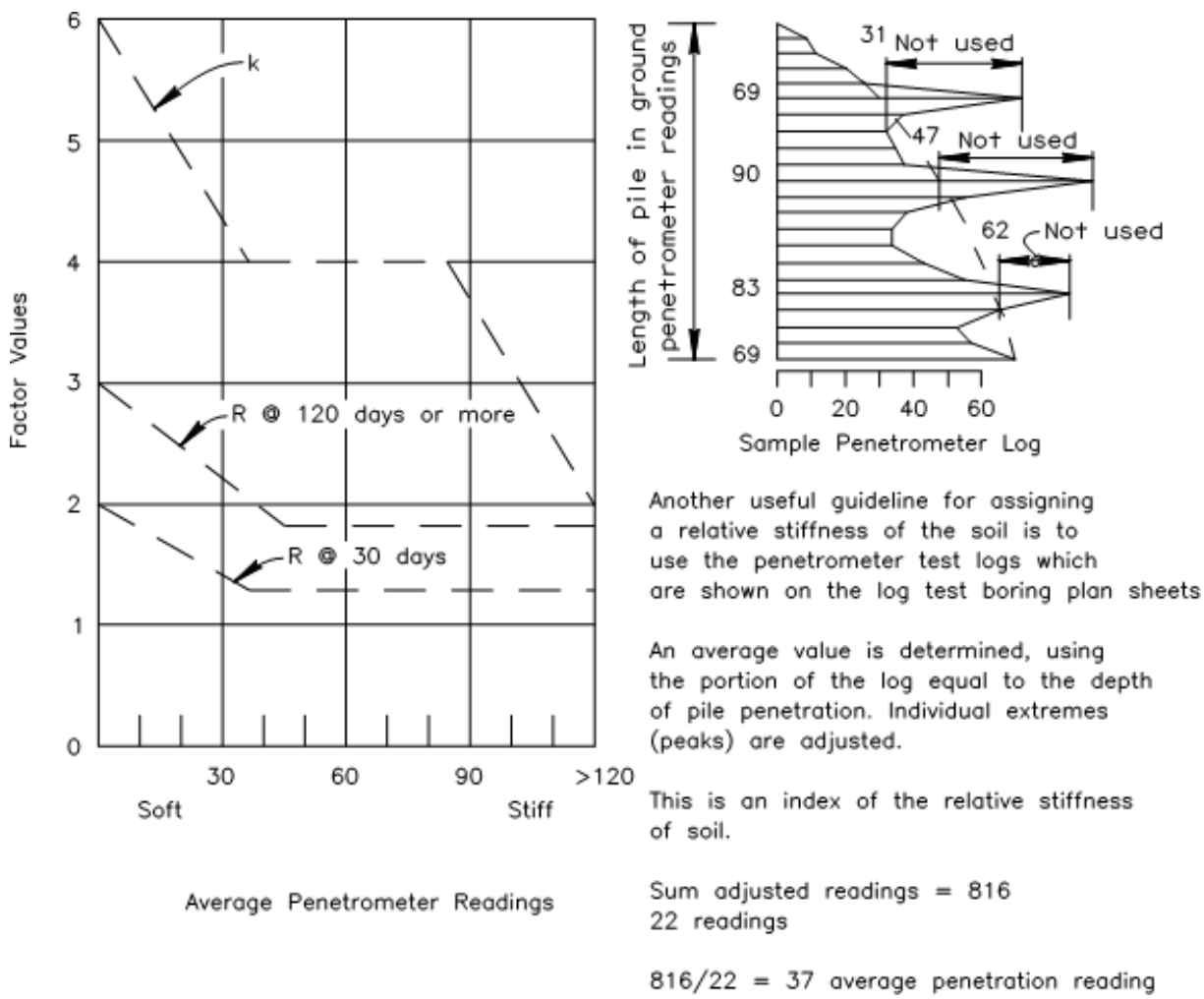

Figure 8-24. Soil Factor Chart.

For a typical bridge project, duration of time of about one month between the initial pull and application of at least a part of the vertical load is a reasonable expectation. As shown in Figure 8-24, *Soil Factor Chart*, for one-month duration of time, the soil relaxation factor is approximately:

$$\mathbf{R} = \begin{cases} \text{about } \mathbf{1.25}, \text{ for medium hard to medium soft soil} \\ \text{up to } \mathbf{2.0}, \text{ max for soft yielding soils, such as bay mud} \end{cases} \quad \text{(8-6.04D-1)}$$

If it is known ahead of time that the piles will remain unloaded for an extended period after being pulled, consideration may be given to increasing the numerical value of the soil relaxation factor. As shown on the Figure 8-24, *Soil Factor Chart*, the recommended increase is proportional to time, from 10% for 2 months up to a maximum of 50% for 4 months or longer.

8-6.04E Pile Diameter

The shop drawings must include enough information to enable the reviewer to make an independent engineering analysis. This requirement applies to pile bents as well as other elements of the falsework system. In the case of timber piling, however, the exact dimensions may not be known ahead of time. In view of this, it is customary to base the design on minimum dimensions (minimum tip and butt diameter, minimum penetration, etc.) and to show these minimum dimensions on the shop drawings.

Pile bents respond to applied loads in a different manner than other components of the falsework system. For example, if the diameter of the driven piles is larger than the diameter assumed in the analysis, vertical load carrying capacity will be increased, as will the ability of the piles to withstand the adverse effect of pile lean. However, with other factors being equal, a large diameter pile cannot be pulled as far as a smaller pile. If the bending stress caused by pulling is a significant factor in the analysis, any pile having a larger ground line diameter than originally assumed may have a lower overall load carrying capacity.

Pile diameter has a greater influence on pile capacity than any other single factor; this must be considered when selecting the value for the analysis.

8-6.05 Analysis of Timber Pile Bents

SC has adopted an empirical procedure for analysis of timber piles, which is based on the results of research involving full scale load tests on driven timber piles. The test report concludes that evaluation of pile capacity using ultimate load factors will provide a higher degree of correlation with test results than will conventional analysis using a fixed level of working stresses.

To avoid a forced compliance with working stress values that appear overly conservative in the light of falsework requirements, SC has developed a modified combined stress equation which, when used with an empirical procedure to determine the effect on pile capacity when driven piles are pulled into line, gives results that are in reasonably close agreement with the test results. Applicability of this procedure has been confirmed by mathematical analysis using a computer pile shaft program used to design pile foundations in permanent work.

The procedure is as follows:

1. Calculate the bending stress in the pile at the time the pile is pulled into position, using the maximum allowable pile pull value shown on the shop drawings. This stress is called the initial bending stress.
2. Calculate the bending stress remaining in the pile after soil relaxation has taken place. This stress is called the relaxed bending stress.
3. Calculate the bending stress caused by vertical load eccentricity, using the maximum allowable value for pile lean shown on the shop drawings.
4. Calculate the bending stress caused by the horizontal design load; calculate the lateral deflection of the pile bent and the bending stress caused by additional vertical load eccentricity resulting from that deflection. This step is not required unless **L/d > 8**. See Section 8-6.05C, *Effect of Horizontal Loads.*
5. If **L/d > 15** calculate the P- Δ deflection for the horizontal design load and for pile lean. Calculate the bending stress resulting from the P-Δ deflection. See Section 8-6.05D, *Effect of P-Δ Deflection*. (If not, skip to step 6).
6. Calculate the compressive stress in the pile.
7. Enter the appropriate values in the combined stress equation to verify the adequacy of the design.

8-6.05A Effect of Pile Pull

The procedure below outlines the steps to determine the initial bending stress that occurs when a pile is pulled and relaxed bending stress remaining in the pile after the soil has relaxed, but before the loads are applied. The bending stress caused by the initial pile pull is limited to 4000 psi.

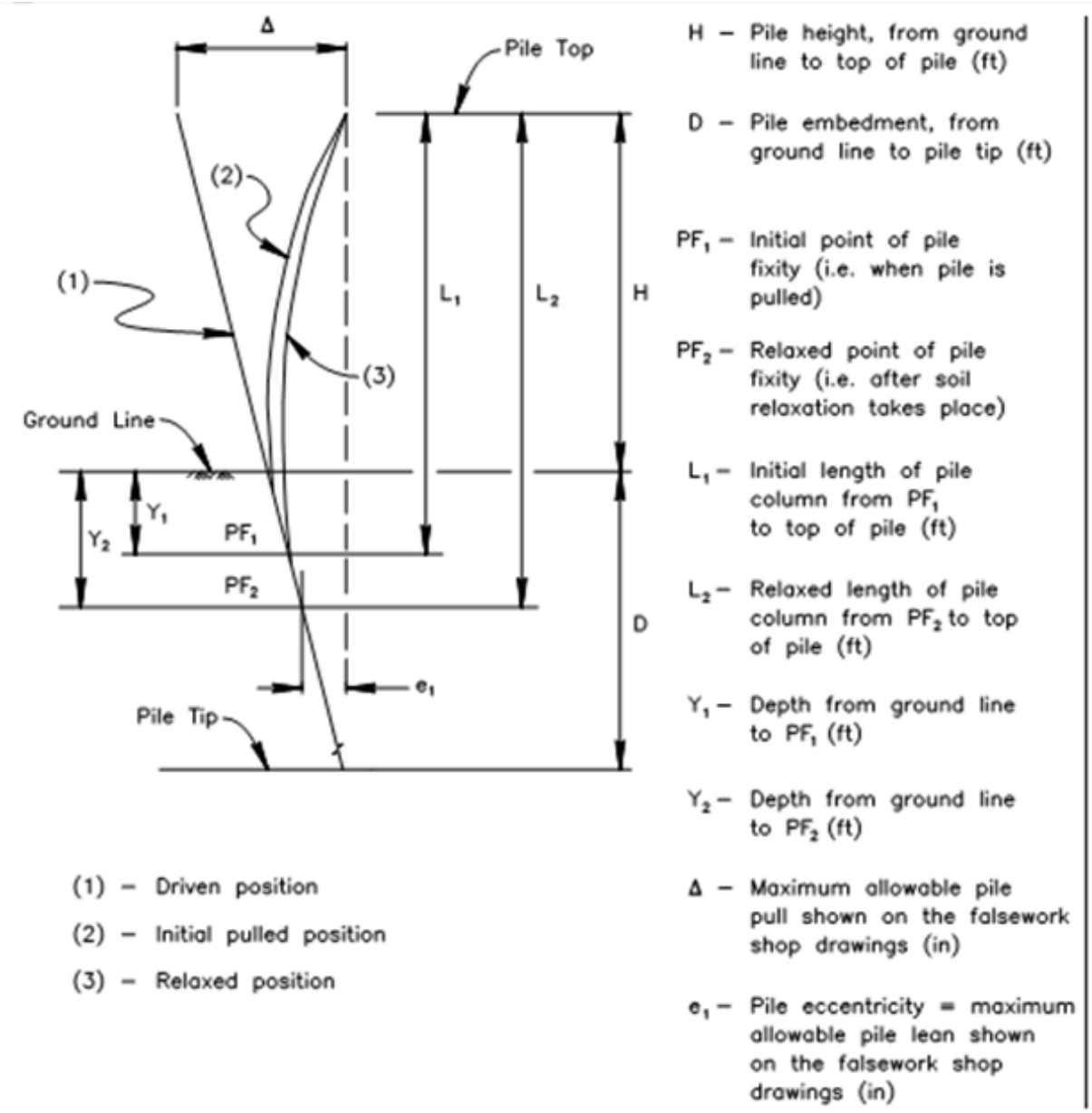

Figure 8-25. Driven Timber Pile Positions.

Refer to Figure 8-25, *Driven Timber Pile Positions,* for equation nomenclature and definition of terms used in the analysis.

The procedure is as follows:

1. Assume a ground line diameter, **d**, using the minimum butt and tip diameters shown on the shop drawings, the height of the bent from ground line to cap, **H**, and the estimated pile embedment, **D**. See Section 8-6.04E, *Pile Diameter*.
2. Using the assumed ground line diameter, **d**, from step 1, calculate the cross-sectional area, **A**, section modulus, **S**, and moment of inertia, **I.**

3. Determine modulus of elasticity, **E**, from NDS Supplement Table 6A, *Reference Design Vales for Treated Round Timber Piles Graded per ASTM D25*.
4. Determine the depth below ground line to the initial point of pile fixity, $\mathbf{Y_1}$, see Section 8-6.04B, *Point of Pile Fixity*.
5. Determine the soil relaxation factor, **R**, to be used in the analysis, see Section 8-6.04D, *Soil Relaxation Factor*.
6. Calculate the force required to pull the top of the pile from its driven position to its final position under the cap and the associated bending stress:

$$\mathbf{L_1 = H + Y_1} \qquad \text{(8-6.05A-1)}$$

$$\mathbf{F_1 = \frac{3EI\Delta}{(12L_1)^3}} \qquad \text{(8-6.05A-2)}$$

$$\mathbf{f_{bp(1)} = \frac{F_1(12L_1)}{S} \leq 4000psi} \qquad \text{(8-6.05A-3)}$$

where $\mathbf{L_1}$ = Length of the pile from initial point of fixity, $\mathbf{PF_1}$, to top of pile when the pile is pulled initially (ft)

H = Length of the pile from the ground to the top of the pile

$\mathbf{Y_1}$ = Length of the pile from the ground to the initial point of fixity, $\mathbf{PF_1}$, when the pile is pulled initially from step 4 (ft)

$\mathbf{F_1}$ = Force required to pull the pile from its driven position to its final position (lb)

E = Modulus of elasticity from step 3 (psi)

I = Moment of inertia from step 2 (in^4)

Δ = Maximum allowable distance the top of the pile may be pulled as shown on the shop drawings (in)

$\mathbf{f_{bp(1)}}$ = Initial bending stress after the pile is pulled (psi)

S = Section modulus from step 2 (in^3)

7. Calculate the force required to keep the top of the pile in its pulled position under the cap after all soil relaxation has occurred and the associated bending stress:

$$\mathbf{Y_2 = RY_1} \qquad \text{(8-6.05A-4)}$$

$$\mathbf{L_2 = H + Y_2} \tag{8-6.05A-5}$$

$$\mathbf{F_2 = \frac{3EI\Delta}{(12L_2)^3} = F_1\left[\frac{(L_1)^3}{(L_2)^3}\right]} \tag{8-6.05A-6}$$

$$\mathbf{f_{bp(2)} = \frac{F_2(12L_2)}{S}} \tag{8-6.05A-7}$$

where $\mathbf{Y_2}$ = Length of the pile from the ground to the final point of fixity, $\mathbf{PF_2}$, after soil relaxation takes place (ft)

R = soil relaxation factor from step 5

$\mathbf{L_2}$ = Length of the pile from final point of fixity to top of pile, $\mathbf{PF_2}$, after soil relaxation takes place (ft)

H = Length of the pile from the ground to the top of the pile

$\mathbf{F_2}$ = Force required to keep the pile in its final position (lb)

$\mathbf{F_1}$ = Force required to pull the pile from its driven position to its final position from step 6 (lb)

$\mathbf{L_1}$ = Length of the pile from initial point of fixity, $\mathbf{PF_1}$, to top of pile when the pile is pulled initially (ft)

$\mathbf{f_{bp(2)}}$ = Bending stress in the pile after soil relaxation (psi)

S = Section modulus from step 2 (in^3)

8-6.05B Diagonal Bracing

Pile bents are classed as either braced or unbraced depending on the degree of rigidity provided by the bracing system. In addition, a bent is considered braced if it is stabilized by external support or if the horizontal forces are carried across the bent, as is often the case in the longitudinal direction.

To be classed as a braced bent, diagonal bracing must meet the following criteria:

- Transverse bracing must comply with the provisions in Section 6-3, *Diagonal Bracing*. In addition, the frame must include a horizontal member installed in a plane through the connections at the bottom of the lowest tier of bracing. The horizontal member must be fastened to each pile in the bent with a bolted connection.
- Longitudinal bracing, if used to stabilize the bent, must comply with the criteria for transverse bracing in the preceding paragraph. If longitudinal forces are carried

across the bent, the design must comply with the criteria in Section 6-4, *Longitudinal Stability.*

8-6.05C Effect of Horizontal Loads

In a typical pile bent diagonal bracing will be installed between the cap and a point near the ground or water surface. Within the limits of a properly designed and constructed bracing system, the bracing will resist horizontal forces in the same manner as the bracing in any other framed bent. Below the bracing, however, a horizontal load will deflect the piles, and this deflection will produce a bending moment. Therefore, the ability of a pile bent to resist the horizontal design load is a function of the contribution to frame rigidity provided by the diagonal bracing and the stiffness of the individual piles.

The effect of bending stresses, produced by horizontal forces, on the stability of the system is a direct function of the unsupported length of the pile. For a diagonally braced pile bent the unsupported length is the vertical distance between the relaxed point of the pile fixity and the bolted connection at the bottom of the lowest tier of diagonal bracing.

Bending stress produced by application of the assumed horizontal load must be considered in all cases where:

$$\frac{\mathbf{L_u}}{\mathbf{d}} > \mathbf{8} \qquad \text{(8-6.05C-1)}$$

where $\mathbf{L_u}$ = Unsupported pile length (ft)
$\mathbf{d}$ = Diameter of the pile at the ground level (ft)

For typical pile diameters and average soil conditions, this value corresponds to a distance of about 2 feet between the ground surface and the bottom of the bracing.

8-6.05D Effect of P-Δ Deflection

When an unsupported pile is subjected to both horizontal and vertical loads, the pile will deflect laterally in the direction of the applied horizontal load. This lateral deflection moves the original point of application of the vertical load, and the resulting horizontal displacement produces an eccentric loading condition. See **x** in Figure 8-27, *Type III Timber Pile Bents Positions*.

The total vertical load eccentricity that occurs when a pile in a pile bent is deflected laterally is the sum of the deflection caused by the horizontal load and the additional deflection caused by bending which occurs as a consequence of the vertical load acting on the pile in its deflected position. The additional deflection of the pile under the applied vertical load, and the corresponding increase in the bending stress, is often referred to as the P-Δ effect.

The total deflection resulting from the combined action of a horizontal and a vertical load cannot be calculated directly since it is the sum of a converging mathematical series. However, it may be approximated by incremental addition using the iterative procedure and formulas shown in Figure 8-27, *Type III Timber Pile Positions*. See also Appendix D *Example Problems,* Example Problem 26, *Type III Bents,* in.

Additional bending due to the P-Δ effect also occurs when a vertical load is applied to an unsupported pile that is leaning in any direction. When the load is applied, the pile will deflect laterally in the direction of the pile lean. In this case the deflecting force is the horizontal component of the vertical load reaction acting along the axis of the out-of-plumb pile.

When the unsupported length of the pile is small, the lateral deflection due to the P-Δ effect will be small as well; therefore, the stress produced by additional bending in the pile may be neglected. As the unsupported length increases, however, the deflection also increases so that at some point the resulting bending stress must be considered.

Bending due to P-Δ deflection must be considered when:

$$\frac{L_u}{d} > 15 \qquad (8\text{-}6.05D\text{-}1)$$

where L_u = Unsupported pile length (ft)

d = Diameter of the pile at the ground level (ft)

While the use of a limiting L_u/d ratio of 15 is considerably more liberal than is typically the case for frame analysis, this procedure is satisfactory for pile bents because of the inherent stability provided by the driven piles.

When considering the effect of P-Δ deflection, the **H** value used to begin the iterative calculation is the total horizontal force produced by the combined application of the horizontal and vertical design loads. Thus, **H** is the sum of the horizontal design load and the horizontal component of the vertical design load acting on the pile in its leaning position.

8-6.05E Braced Pile Bents

For evaluation of design adequacy, braced bents are divided into three categories, or bent types, depending on the unsupported length to diameter, L_u/d, ratio of the pile, as follows:

Type I $\frac{L_u}{d} \leq 8$ (8-6.05E-1)

Type II $8 < \frac{L_u}{d} \leq 15$ (8-6.05E-2)

Type III $\frac{L_u}{d} > 15$ (8-6.05E-3)

As shown in the combined stress equation in the following sections, all bending stresses are additive. This occurs because, when evaluating the adequacy of a pile bent, the horizontal design load is assumed to act in the direction that produces the highest combined bending stress in the pile.

When calculating stresses and deflections in the pile, the bent will be considered as a braced frame within the vertical limits of the bracing, and the horizontal design load will be applied in a plane through the bolted connections at the bottom of the bracing.

The unsupported length of the pile is the vertical distance between the relaxed point of pile fixity and the connections at the bottom of the lowest tier of bracing. The pile is assumed to be fixed against rotation and translation at the relaxed point of fixity and free to rotate and translate with the frame at the connection at the bottom of the bracing.

The procedure in the following sections depends on the type of bent under consideration.

8-6.05E(1) Type I Pile Bents

Type I pile bents must conform to the bracing criteria in Section 8-6.05B, *Diagonal Bracing,* and satisfy equation 8-6.05E-1, $L_u/d \leq 8$.

In a Type I bent the bending stress produced by the horizontal design load may be neglected, and the modified combined stress equation is:

$$\frac{f_{bp(2)} + 2f_{be(1)}}{3F_b'} + \frac{2f_c}{3F_c'} \leq 1.0 \qquad \text{(8-6.05E(1)-1)}$$

where $f_{bp(2)}$ = Bending stress remaining in the pile after soil relaxation takes places (psi)

$f_{be(1)}$ = Bending stress due to vertical load eccentricity occurring as the consequence of pile lean (psi)

F_b' = Adjusted bending stress design value (psi)

$\mathbf{f_c}$ = Stress in compression parallel to the grain (axial compression) due to the vertical load (psi)

$\mathbf{F_c'}$ = Allowable working stress in compression (psi)

In the combined stress equation, the numerical coefficients "2" and "3" are the load factor and the working stress modification factor, respectively.

The procedure for a Type I braced bent using the modified combined stress equation is as follows:

1. Calculate the bending stress remaining in the pile, $\mathbf{f_{bp(2)}}$, following the procedure explained in Section 8-6.05A, *Effect of Pile Pull.*
2. Calculate the bending stress due to vertical load eccentricity:

$$\mathbf{f_{be(1)} = \frac{P_v e_1}{S}} \qquad \text{(8-6.05E(1)-2)}$$

where $\mathbf{f_{be(1)}}$ = Bending stress due to vertical load eccentricity (psi)

$\mathbf{P_v}$ = Vertical design load (lb)

$\mathbf{e_1}$ = Maximum pile lean shown on the shop drawings (in)

S = Pile section modulus (in^3)

3. Calculate the stress due to axial compression:

$$\mathbf{f_c = \frac{P_v}{A}} \qquad \text{(8-6.05E(1)-3)}$$

where $\mathbf{f_c}$ = Compressive stress due to axial compression (psi)

$\mathbf{P_v}$ = Vertical design load (lb)

A = Area of the pile at the ground line (in^2)

4. When longitudinal forces produced by the horizontal design load are carried across the bent, the unsupported length of the pile in the longitudinal direction, because of the absence of bracing, will be greater than in the transverse direction. In such cases it is necessary to determine the allowable compressive stress, $\mathbf{F_c}$.
5. Enter the appropriate values and solve the combined stress equation (8-6.05E(1)-1).

8-6.05E(2) Type II Pile Bents

Type II pile bents must conform to the bracing criteria in Section 8-6.05B *Diagonal Bracing* and satisfy equation 8-6.05E-2, **$8 < L_u/d \leq 15$**.

For Type II bents it is necessary to consider the effect of horizontal forces but not P-Δ deflection. For this case the modified combined stress equation becomes:

$$\frac{f_{bp(2)}+2f_{be(1)}+2\left(f_{bH}+f_{be(2)}\right)}{3F_b{}'}+\frac{2f_c}{3F_c{}'}\leq 1. \qquad \text{(8-6.05E(2)-1)}$$

where $f_{bp(2)}$ = Bending stress remaining in the pile after soil relaxation takes places (psi)

$f_{be(1)}$ = Bending stress due to vertical load eccentricity occurring as the consequence of pile lean (psi)

f_{bH} = Bending stress produced by the horizontal design load (psi)

$f_{be(2)}$ = Bending stress due to the additional vertical load eccentricity (psi)

F_b' = Allowable working stress in bending (psi)

f_c = Stress in compression parallel to the grain (axial compression) due to the vertical load (psi)

F_c' = Allowable working stress in compression (psi)

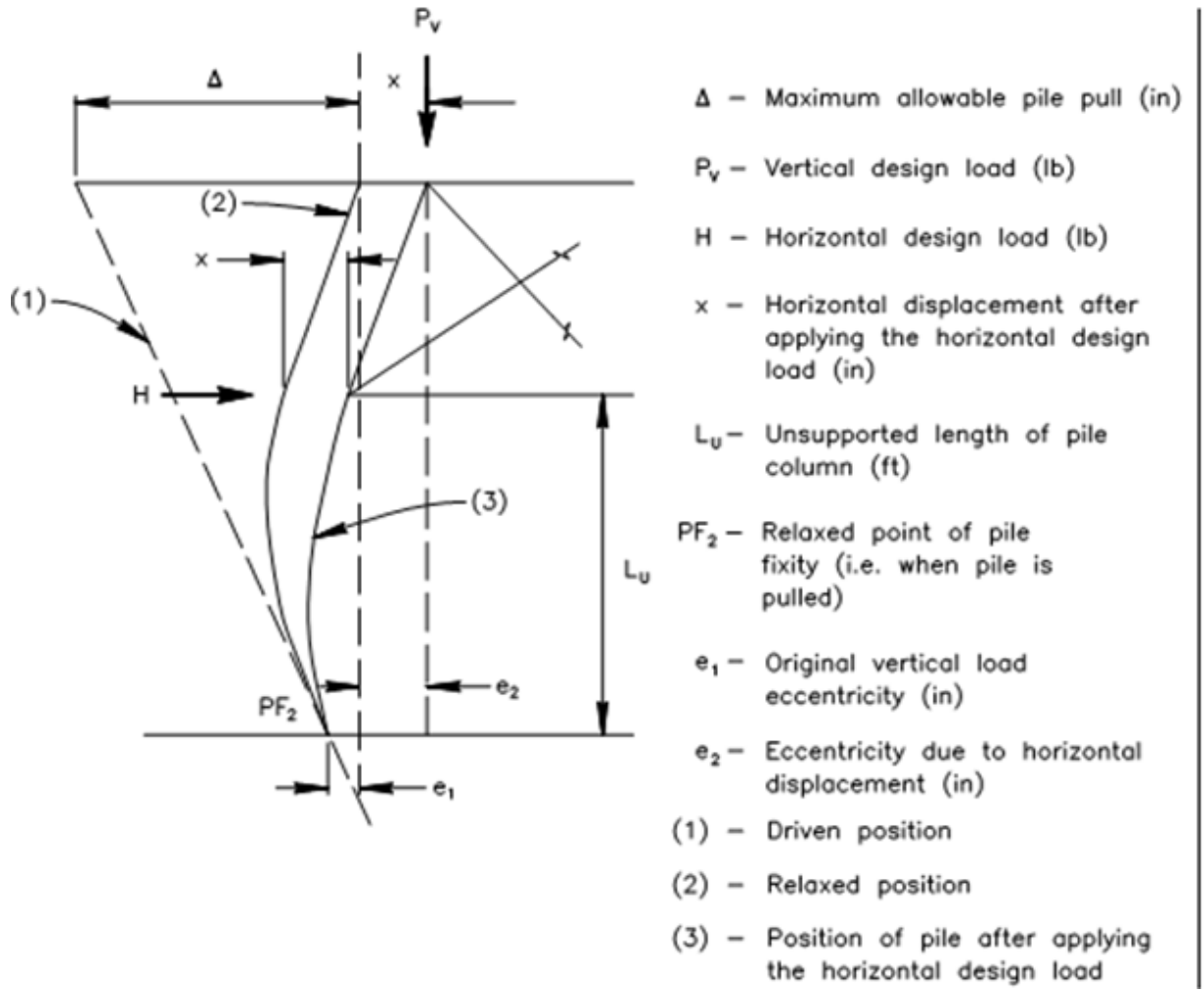

Figure 8-26. Type II Timber Pile Positions.

Figure 8-26, *Type II Timber Pile Positions,* is a schematic representation of a pile in a Type II pile bent before and after the horizontal design load is applied.

The procedure for a Type II braced bent using the modified combined stress equation is as follows:

1. Calculate the bending stress remaining in the pile, $\mathbf{f_{bp(2)}}$, following the procedure explained in Section 8-6.05A, *Effect of Pile Pull.*
2. Calculate the bending stress produced by vertical load eccentricity due to pile lean, $\mathbf{f_{be(1)}}$, using equation 8-6.05E(1)-2.
3. Calculate the stress due to axial compression, $\mathbf{f_c}$, using equation 8-6.05E(1)-3.
4. Determine the allowable stress due to axial compression, $\mathbf{F_c}$.
5. Calculate the bending stress produced by the horizontal design load.

$$\mathbf{f_{bH} = \frac{(H)(12L_u)}{S}} \qquad \text{(8-6.05E(2)-2)}$$

where $\mathbf{f_{bH}}$ = Bending stress due to horizontal load

H = Horizontal design load (lb)

$\mathbf{L_u}$ = Unbraced length (ft)

S = Pile section modulus (in^3)

6. Calculate the horizontal displacement that occurs when the horizontal design load is applied to the pile. See **x** in Figure 8-26 *Type II Timber Pile Positions*:

$$\mathbf{x = \frac{(H)(12l_u)^3}{3EI}} \qquad \text{(8-6.05E(2)-3)}$$

where **x** = Horizontal displacement (in)

H = Horizontal design load (lb)

$\mathbf{L_u}$ = Unbraced length (ft)

E = Modulus of elasticity (psi)

I = Moment of inertia of the pile (in^4)

7. Calculate the bending stress, $\mathbf{f_{be(2)}}$, due to additional vertical load eccentricity (e_2) caused by the horizontal displacement, **x**. The additional vertical load eccentricity, $\mathbf{e_2}$, is numerically equal to the horizontal displacement, **x**, see Figure 8-26, *Type II Timber Pile Positions*:

$$\mathbf{f_{be(2)} = \frac{(P_v)(e_2)}{S}} \qquad \text{(8-6.05E(2)-4)}$$

where $\mathbf{f_{be(2)}}$ = Bending stress due to the additional vertical load eccentricity (psi)

$\mathbf{P_v}$ = Vertical design load (lb)

$\mathbf{e_2}$ = x = Additional vertical load eccentricity caused by the horizontal displacement (in) alt text

8. Enter the appropriate values and solve the combined stress equation 8-6.05E(2)-1.

8-6.05E(3) Type III Pile Bents

Type III pile bents must conform to the bracing criteria in Section 8-6.05B, *Diagonal Bracing* and satisfy equation 8-6.05E-3, $\mathbf{L_u/d > 15}$.

For Type III bents it is necessary to consider the effect of horizontal forces and the bending stress produced by P-Δ deflection. For this case the modified combined stress equation becomes:

$$\frac{f_{bp(2)}+2f_{be(1)}+2\left(f_{bH}+f_{be(3)}\right)}{3\mathbf{F_b}'}+\frac{2f_c}{3\mathbf{F_c}'}\leq 1.0 \qquad \text{(8-6.05E(3)-1)}$$

where $\mathbf{f_{bp(2)}}$ = Bending stress remaining in the pile after soil relaxation takes places (psi)

$\mathbf{f_{be(1)}}$ = Bending stress due to vertical load eccentricity occurring as the consequence of pile lean (psi)

$\mathbf{f_{bH}}$ = Bending stress produced by the horizontal design load (psi)

$\mathbf{f_{be(3)}}$ = Bending stress due to the additional vertical load eccentricity (psi)

$\mathbf{F_b'}$ = Allowable working stress in bending (psi)

$\mathbf{f_c}$ = Stress in compression parallel to the grain (axial compression) due to the vertical load (psi)

$\mathbf{F_c'}$ = Allowable working stress in compression (psi)

The procedure for a Type III braced bent using the modified combined stress equation is as follows:

1. Calculate the bending stress remaining in the pile, $\mathbf{f_{bp(2)}}$, following the procedure explained in Section 8-6.05A, *Effect of Pile Pull.*
2. Calculate the bending stress produced by vertical load eccentricity due to pile lean, $\mathbf{f_{be(1)}}$, using equation 8-6.05E(1)-2.
3. Calculate the stress due to axial compression, $\mathbf{f_c}$, using equation 8-6.05E(1)-3.
4. Determine the allowable stress due to axial compression, $\mathbf{F_c'}$.
5. Calculate the bending stress due to application of the horizontal design load, $\mathbf{f_{bH}}$, using equation 8-6.05E(2)-2.
6. Calculate the horizontal component of the vertical load reaction, $\mathbf{H_e}$, when the vertical load (P_v) is applied to the pile in its initial leaning position:

$$\mathbf{H_e} = \frac{(\mathbf{P_v})(\mathbf{e_1})}{(\mathbf{12L_2})} \qquad \text{(8-6.05E(3)-2)}$$

where $\mathbf{H_e}$ = Horizontal component of the vertical load (lb)

$\mathbf{P_v}$ = Vertical load (lb)

$\mathbf{e_1}$ = Maximum pile lean shown on the shop drawings (in)

$\mathbf{L_2}$ = Length of the pile when (P_v) is applied (ft)

7. Calculate the total horizontal force, $\mathbf{H_T}$. Both the horizontal design load, **H**, and the horizontal component of the vertical design load, $\mathbf{H_e}$, act on the pile to produce additional vertical load eccentricity. Therefore, these two forces are added to obtain the total horizontal force, $\mathbf{H_T}$, to use in the P-Δ calculation:

$$\mathbf{H_T} = \mathbf{H} + \mathbf{H_e} \qquad \text{(8-6.05E(3)-3)}$$

where $\mathbf{H_T}$ = Total horizontal force (lb)

H = Horizontal design load (lb)

$\mathbf{H_e}$ = Horizontal component of the vertical load (lb)

8. Using the total horizontal force, $\mathbf{H_T}$, from step 7, calculate the total horizontal displacement, $\mathbf{e_3}$, following the procedure explained in Section 8-6.05D, *Effect of P-Δ Deflection,* and illustrated in Figure 8-27, *Type III Timber Pile Positions*. See also Appendix D, Example Problem 26, *Type III Bents.*

   Referring to Figure 8-27, *Type III Timber Pile Positions*, the value for **H** is the actual horizontal force being used in the analysis. In the equations, all horizontal force values are in pounds. The iteration may be discontinued when the calculated total displacement exceeds the previously calculated total displacement by less than 5 %.

9. Calculate the bending stress, $\mathbf{f_{be(3)}}$, produced by the horizontal displacement, $\mathbf{e_3}$, calculated in step 8:

$$f_{be(3)} = \frac{(P_v)(e_3)}{S} \qquad \text{(8-6.05E(3)-4)}$$

where $\mathbf{f_{be(3)}}$ = Bending stress due to the horizontal displacement (psi)

$\mathbf{P_v}$ = Vertical design load (lb)

$\mathbf{e_3}$ = P-Δ deflection due to the combined effect of the horizontal design load and pile lean (in)

S = Pile section modulus (in^3)

10. Enter the appropriate values and solve the combined stress equation 8-6.05E(3)-1.

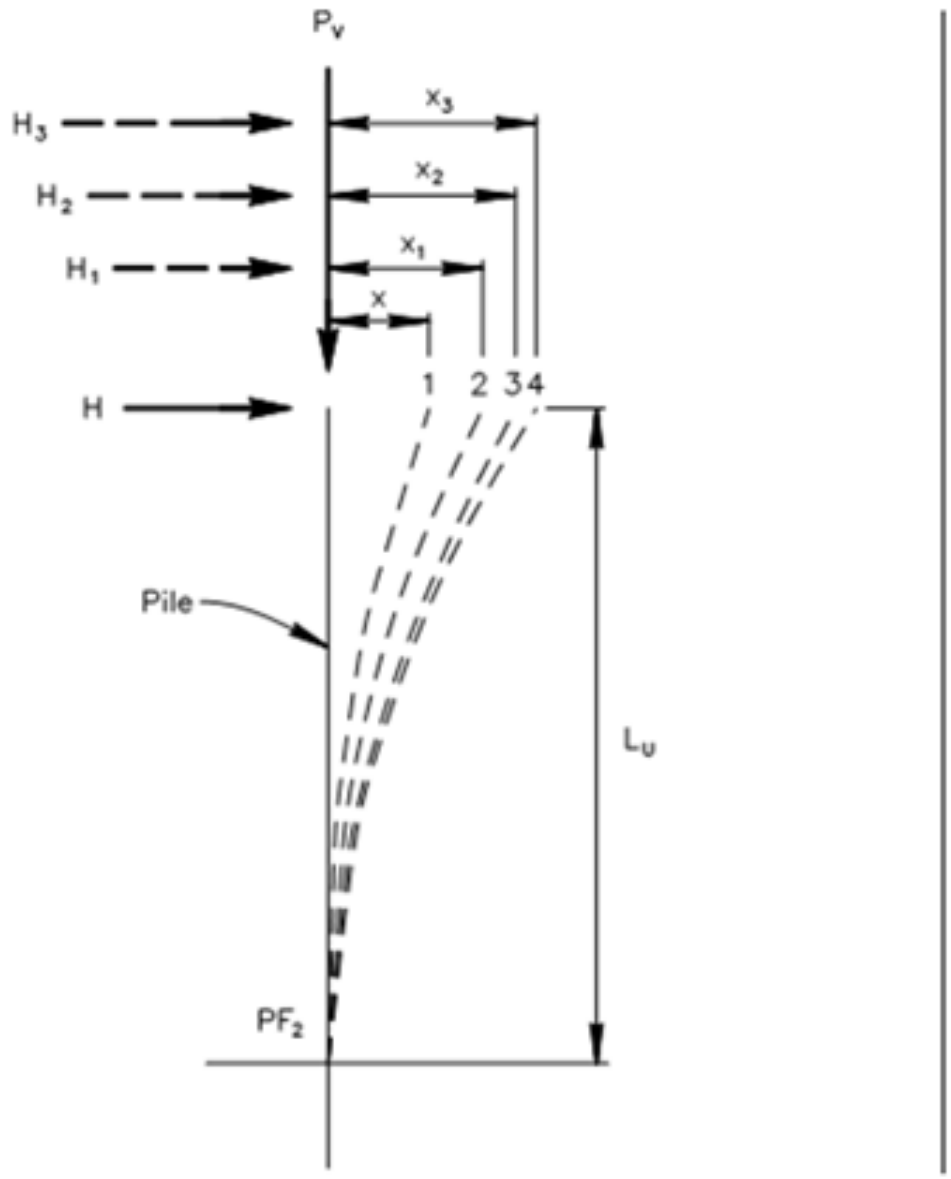

Figure 8-27. Type III Timber Pile Positions.

8-6.05F Unbraced Pile Bents

An unbraced bent is any bent where diagonal bracing is not used, and which is not stabilized by external support. The term unbraced bent also includes any braced or partly braced bent where the bracing does not meet the criteria in Section 8-6.05B, *Diagonal Bracing*.

When calculating the deflection and bending moment in an unbraced pile bent, the horizontal design load will be applied in a plane at the top of the piles, and the piles will be analyzed as unsupported cantilevers extending from the relaxed point of pile fixity to the pile cap.

Except for the point of application of the horizontal design load, the adequacy of unbraced bents is evaluated in the same manner as braced bents. Follow the procedure for the appropriate pile bent type as discussed in Section 8-6.05E, *Braced Pile Bents*.

8-6.05G Longitudinal Stability

The discussion in Sections 8-6.05E(2), *Type II Pile Bents,* and 8-6.05E(3), *Type III Pile Bents,* focuses on the procedures for Type II and Type III pile bents, respectively, when subjected to horizontal forces applied in the transverse direction, or parallel to the plane of the bracing. However, the falsework system must be capable of resisting horizontal forces applied in any direction; therefore, the pile bent analysis must consider longitudinal stability as well.

In most falsework designs, longitudinal stability is achieved by carrying the horizontal design load across the falsework bents to a point of external support, such as an abutment or column that is part of the permanent structure. Such designs must comply with the provisions in Section 6-4, *Longitudinal Stability*.

When pile bents are designed in accordance with Section 6-4, *Longitudinal Stability*, longitudinal application of the horizontal design load need not be considered. If, however, longitudinal stability is provided by some other means, such as diagonal bracing between two or more adjacent bents, the ability of the piles to resist the horizontal design load must be investigated.

Diagonal bracing used in the longitudinal direction must comply with the provisions in Section 8-6.05B, *Diagonal Bracing*, including the requirement for a horizontal member between the connections at the bottom of the bracing. The horizontal member must be sized to carry the horizontal design load as a compression member including bending from self-weight. If the member is not so designed, or if the bracing fails to comply with Section 8-6.05B, *Diagonal Bracing,* in any other aspect, the bent will be considered unbraced in the longitudinal direction.

When the longitudinal bracing is adequate, the horizontal design load will be applied in a plane through the connections at the bottom of the bracing, and the stresses and deflections in the pile below the bracing will be calculated as provided in Sections 8-6.05E(2), *Type II Pile Bents,* and 8-6.05E(3), *Type III Pile Bents,* for Type II and Type III bents, respectively. However, there are several additional factors that must be considered when investigating the longitudinal analysis, as discussed in the following paragraphs.

When the connections at the bottom of the longitudinal bracing are not located in the same horizontal plane as the connections at the bottom of the transverse bracing, the unbraced length of the pile below the bracing will be different for the longitudinal and transverse directions, and this may result in different bent types in the two directions. For example, a given bent may be Type II in the transverse direction, but because of the bracing location, the bent may be Type III in the longitudinal direction.

All bents that are connected by longitudinal bracing will deflect together when the horizontal design load is applied in the longitudinal direction; therefore, the total horizontal design load acting on the system must be apportioned between the bents. The proportioning is related to the stiffness of the bents in the longitudinal direction. Consider pile bents D-E and F-G in Figure 8-28, *Longitudinal Timber Pile Bent System*, if bents E and F require a larger diameter pile to carry the heavier vertical load. In such bents, the total horizontal load acting on the system must be proportioned between the bents in a manner that reflects the relative stiffness of the piles in each bent, rather than equally between the bents.

When the piles in two adjacent pile bents have similar properties, each bent will resist 1/2 of the total horizontal load in the longitudinal direction.

If the two adjacent bents carry different vertical loads, the horizontal loads will be different in the transverse direction for each bent and the longitudinal horizontal load will be different as well. For example, consider the bent and bracing arrangement shown schematically in Figure 8-28, *Longitudinal Timber Pile Bent System*. For braced bent D-E the horizontal design load (HDL) is:

- In the transverse direction the 2% of the total dead load is:

$$\mathrm{HDL_D} = 0.02\mathrm{P} \qquad \text{(8-6.05G-1)}$$

$$\mathrm{HDL_E} = 0.02(1.5\mathrm{P}) \qquad \text{(8-6.05G-2)}$$

- In the longitudinal direction the 2% of the total dead load is:

$$\mathrm{HDL_D} = \left(\frac{1}{2}\right) 0.02(\mathrm{P} + 1.5\mathrm{P}) \qquad (8\text{-}6.05G\text{-}3)$$

$$\mathrm{HDL_E} = \left(\frac{1}{2}\right) 0.02(\mathrm{P} + 1.5\mathrm{P}) \qquad (8\text{-}6.05G\text{-}4)$$

where **P** = Total dead load, see *Standard Specifications*, Section 48-2.02B(2), *Falsework – Design Criteria – Loads*.

Even where the vertical load is the same at all bents under consideration, the horizontal design load is not necessarily the same. For example, at bent A-B in Figure 8-28, *Longitudinal Timber Pile Bent System*, the horizontal design load in the transverse direction is the same for both bents. In the longitudinal direction, however, some portion of the horizontal load generated by the vertical load applied to the free-standing bent C will be carried over to bent B, and this produces a greater horizontal design load longitudinally than transversely at each bent in the A-B system.

Finally, differences in the applied vertical load on adjacent braced bents may create a situation where the piles in the two bents will have different physical properties. As an example, this would be the case at bents D-E and F-G, if bents E and F require a larger diameter pile to carry the heavier vertical load. In such bents, the total horizontal load acting on the system must be proportioned between the bents in a manner that reflects the relative stiffness of the piles in each bent, rather than equally between the bents.

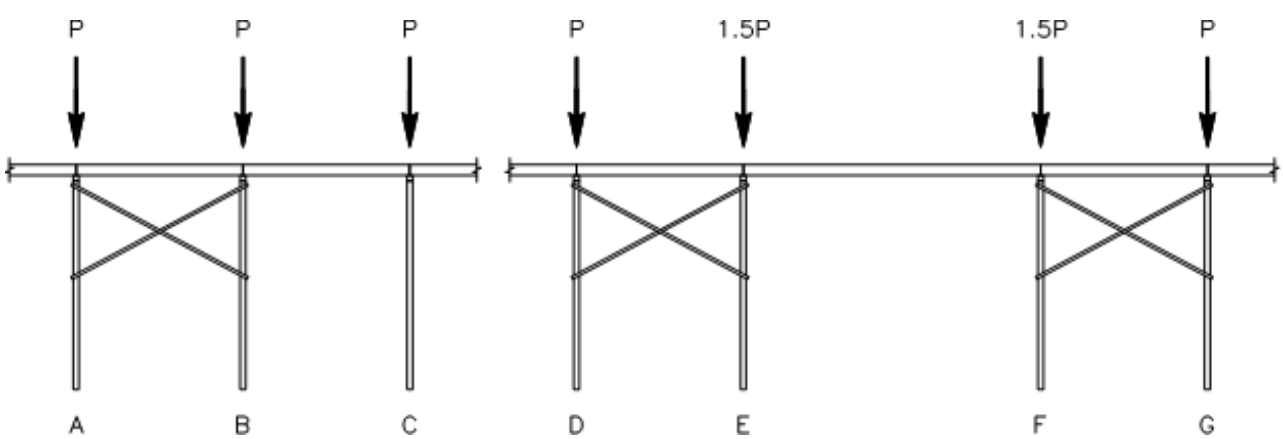

Figure 8-28. Longitudinal Timber Pile Bent System.

8-6.06 Field Evaluation of Pile Capacity

Because of the construction uncertainties associated with pile driving, piles in the driven position do not always attain the penetration assumed in the analysis. Additionally, unanticipated driving and/or site conditions may cause a driven pile to deviate significantly from its planned position shown on the shop drawings.

Contractually, any pile that fails to reach the required penetration, meet design assumptions, or deviates from its theoretical position greater than the allowable deviation shown on the shop drawings, is rejected without further evaluation because the construction work represented by that pile is not in conformance with the authorized shop drawings.

However, the contractor may submit a request for further evaluation of the rejection by submitting revised shop drawings and calculations showing that the pile does conform with the design assumptions. The revised shop drawings must be submitted, reviewed, and authorized using normal procedures.

It is emphasized that field personnel are not authorized to undertake any unilateral investigation or authorize a driven pile which does not conform to the requirements on the shop drawings.

The procedures used to estimate the capacity of piles which do not attain the penetration necessary to develop pile fixity, or which in their driven position exceed the allowable driving tolerances shown on the shop drawings, are explained in the following sections.

8-6.06A Failure to Attain Required Penetration

As discussed in Section 8-6.04A*, Required Pile Penetration*, the ratio of the depth of pile penetration to the height of the pile above the ground surface, **D/H**, is the criterion to ascertain whether a given pile is driven deeply enough to develop the fixed condition.

Pile fixity is assumed when:

$$\frac{\mathbf{D}}{\mathbf{H}} \geq \mathbf{0.7} \qquad \text{(8-6.06A-1)}$$

where **D** = Depth of pile penetration (ft)

H = Height of pile above ground surface (ft)

When driven piles do not attain the penetration necessary to assure the fixed condition, the procedure discussed in the preceding sections of this manual is not valid. However, SC has developed an alternative procedure that may be used to estimate the load carrying capacity of such piles.

The alternative procedure assumes that any pile having a ratio of the depth of pile penetration to the height of the pile above the ground surface of **D/H < 0.75**, will rotate to a degree when the loads are applied. The amount of rotation is a function of the restraint developed by the pile embedment obtained. The degree of restraint decreases,

and rotation increases as the **D/H** ratio becomes smaller; therefore, the procedure depends on the actual **D/H** ratio in a given situation, as explained in the following Sections.

Figure 8-29, *Pile Rotation Stiffness Coefficient,* shows that pile rotation will reduce the relative stiffness of a pile for all **D/H < 1**, although the stiffness coefficient is too small to have an appreciable influence on pile capacity until **D/H = 0.75**. For this reason, **0.75** was selected as a practical limiting **D/H** ratio for the fixed condition assumption.

8-6.06A(1) Analysis for 0.45 ≤ D/H < 0.75

When **0.45 ≤ D/H < 0.75**, the piles can resist some bending. The amount of bending resistance developed by a given pile is an inverse function of the degree of rotation. As the D/H ratio decreases between the limiting values, rotation increases and bending resistance and overall load carrying capacity are reduced.

To account for the reduced overall load carrying capacity when rotation occurs, a stiffness reducing coefficient, **Q**, is applied when calculating the depth to the point of pile fixity. The stiffness reducing coefficient, **Q**, is obtained graphically from the Figure 8-29, *Pile Rotation Stiffness Coefficient*, which shows **Q** values for **0.45 ≤ D/H ≤ 1** for normal and soft soils.

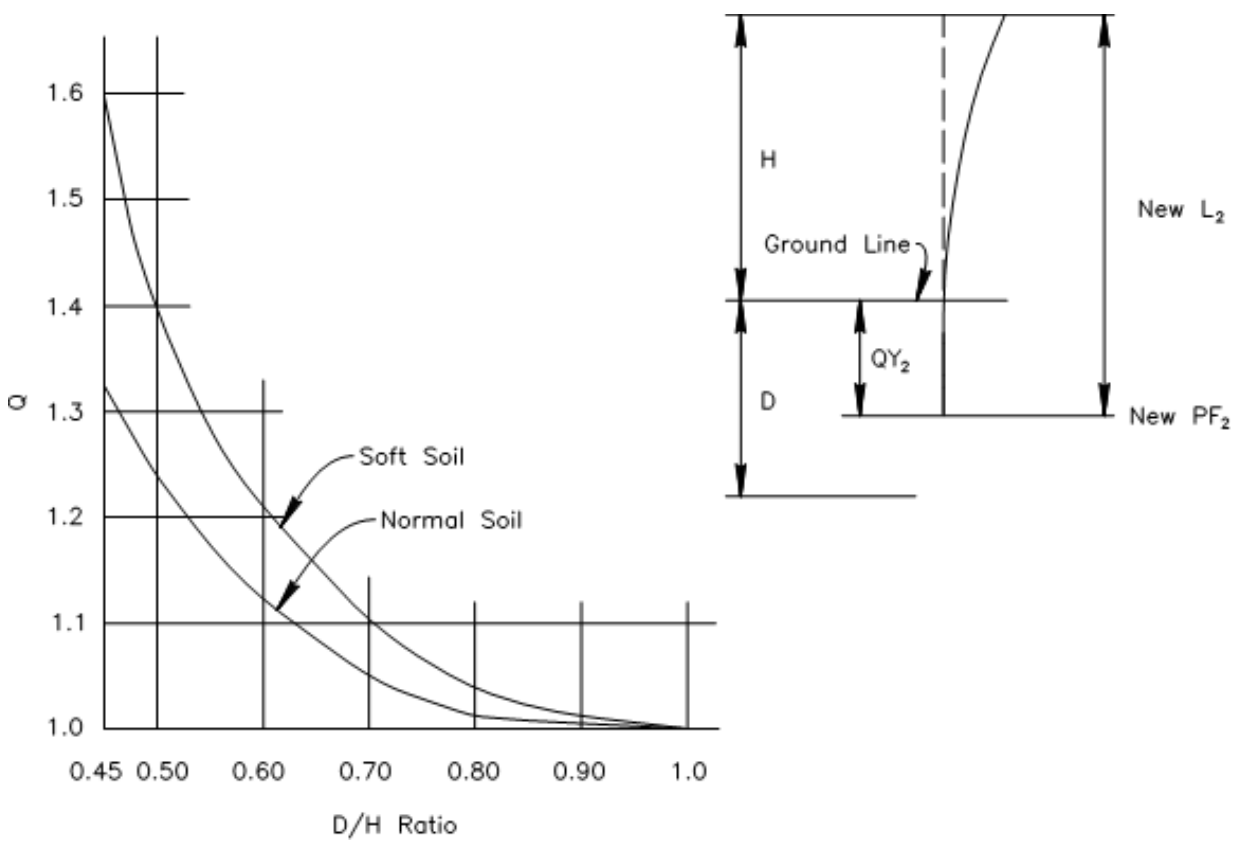

Figure 8-29. Pile Rotation Stiffness Coefficient.

The procedure for estimating pile capacity is as follows:

1. Determine stiffness reducing coefficient, **Q**, from Figure 8-29, *Pile Rotation Stiffness Coefficient*, using the **D/H** ratio of the installed pile.

2. Calculate a new length of the pile to the point of fixity, **New L_2**:

$$\mathbf{New\ L_2 = H + QY_2} \qquad \text{(8-6.06A(1)-1)}$$

where $\mathbf{Y_2}$ = Depth from the ground line to the relaxed point of pile fixity of the properly installed pile per the original shop drawings, previously calculated using the procedure in Section 8-6.05A, *Effect of Pile Pull*, see also Figure 8-25, *Driven Timber Pile Positions.*

Q = Pile Rotation Stiffness Coefficient

$\mathbf{QY_2}$ = Depth to an adjusted point of fixity used in the analysis of the installed pile (ft)

It is unnecessary to calculate a new $\mathbf{L_1}$ value because it is unnecessary to recalculate the bending stress that occurs during the initial pile pull. The smaller **D/H** ratio results in a longer $\mathbf{L_1}$ value, which in turn produces a lower initial bending stress.

3. Calculate a new unsupported length, $\mathbf{L_u}$, and a new adjusted $\mathbf{L_u/d}$ ratio, using the new length of the pile to the point of fixity, **New L_2**. The new unsupported length, $\mathbf{L_u}$, is the vertical distance between the bottom of the bracing and the ground surface plus the depth to the adjusted point of pile fixity, $\mathbf{QY_2}$, from step 2.

4. Use the new adjusted $\mathbf{L_u/d}$ ratio to determine the pile bent type, see Section 8-6.05E, *Braced Pile Bents:*

   a. For a Type I pile bent, use the new length of the pile to the point of fixity, **New L_2**, and calculate new values for $\mathbf{f_{bp(2)}}$ and $\mathbf{f_{be(1)}}$, see Section 8-6.05E(1), *Type I Pile Bents.*

   b. For a Type II pile bent, use the new length of the pile to the point of fixity, **New L_2**, to calculate new values for $\mathbf{f_{bp(2)}}$ and $\mathbf{f_{be(1)}}$, and use the new unsupported length, $\mathbf{L_u}$, to calculate new values for $\mathbf{f_{bH}}$ and $\mathbf{f_{be(2)}}$, see Section 8-6.05E(2), Type II Pile Bents.

   c. For a Type III pile bent, use the new length of the pile to the point of fixity, **New L_2**, to calculate new values for $\mathbf{f_{bp(2)}}$ and $\mathbf{f_{be(1)}}$, and use the new unsupported length, $\mathbf{L_u}$, to calculate new values for $\mathbf{f_{bH}}$ and $\mathbf{f_{be(3)}}$, see Section 8-6.05E(3), Type III Pile Bents.

5. Enter the new values obtained in steps 4a, 4b, or 4c in the appropriate combined stress equation. The pile is adequate if the value of the equation is not greater than 1.0.

8-6.06A(2) Analysis for D/H < 0.45

For **D/H < 0.45**, the ability of a given pile to resist pullback bending decreases rapidly and, as the theoretical point of contra flexure approaches the pile tip, pile restraining capability becomes highly subjective. Furthermore, as pile embedment decreases, the type of soil has a significantly greater influence on the ability of a pile to resist rotation. When subjected to a bending moment, such piles are assumed to be free to rotate but restrained against lateral translation at or very near the pile tip.

Therefore, piles having a **D/H < 0.45** are considered as incapable of developing a true point of fixity and will only be capable of carrying axial loads. For such piles, any vertical load eccentricity and all horizontal forces must be resisted by bracing, external support, or other piles in the system.

8-6.06B Failure to Meet Driving Tolerance

Bending stresses produced by the allowable driving tolerances (pile pull and pile lean values shown on the shop drawings) are added when reviewing falsework designs for compliance with contract requirements. This procedure is a conservative approach to verify that the piles are not over stressed under the most adverse loading combination.

In practice, however, the pile pull direction may be opposite to the vertical load eccentricity caused by pile lean, in which case the adverse loading combination assumed in the analysis will not occur. When the pile pull direction is opposite to the vertical load eccentricity, the two bending stresses are compensating. Depending on the driven position, excessive pile pull in one direction may be offset by excessive lean in the opposite direction, so that the resulting combined stress is less than the allowable stress.

Figure 8-30, *Timber Pile Position,* shows that Δ and **e** are the pull and lean distances from the driven position of a pile in a braced pile bent. Both distances exceed their respective allowable values for pile pull and pile lean shown on the authorized shop drawings.

In the following general discussion, the direction of pile pull and the direction of pile lean are assumed to be in the same vertical plane.

When calculating bending stresses for the as driven position of a given pile, follow the procedures explained in Section 8-6.05, *Analysis of Timber Pile Bents*, but use the

actual pile pull and pile lean distances. However, for the as-driven analysis, it is also necessary to determine whether the bending stress values are positive or negative before solving the combined stress equation.

In accordance with standard sign convention, stress values are positive or negative depending on the direction of the bending moment applied at the relaxed point of pile fixity. A clockwise moment produces positive bending stress. Conversely, a counterclockwise moment produces negative bending stress. Therefore, in a Type I bent, the combined stress equation for the general case is:

$$\left|\frac{\pm f_{bp(2)} \pm 2f_{be(1)}}{3F'_b}\right| + \frac{2f_c}{3F_c} \leq 1.0 \qquad \text{(8-6.06B-1)}$$

The vertical lines on either side of the bending stress fraction indicate that the absolute value of the fraction is to be used when solving the equation.

Example Problems 27 and 28, *Failure of Pile to Attain Required Penetration,* in Appendix D *Example Problems,* illustrate the procedure to be followed when evaluating the load carrying capacity of driven piles.

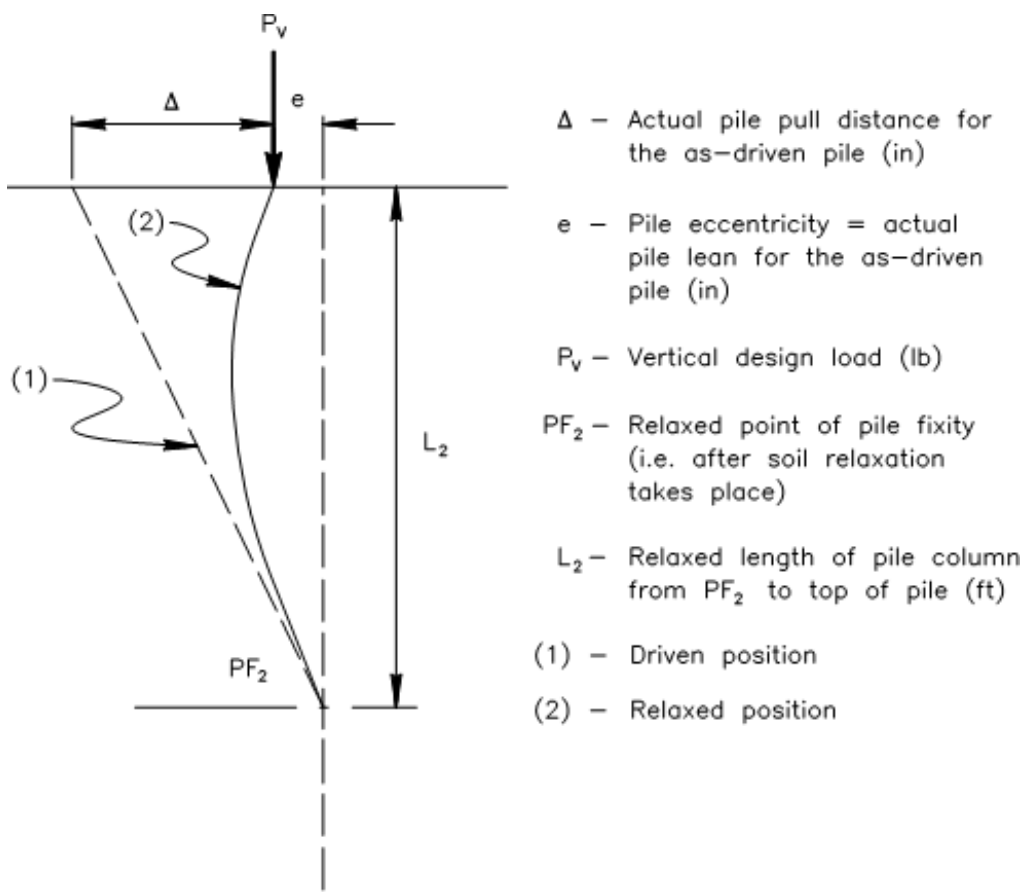

Figure 8-30. Timber Pile Position.

8-6.06B(1) Type I Pile Bents

Refer to Figure 8-30, *Timber Pile Position*, the pile pull produces a clockwise bending moment and therefore a positive bending stress, and the vertical load eccentricity due to pile lean produces a counterclockwise bending moment and therefore a negative bending stress. Hence, the combined stress equation is:

$$\left|\frac{+\mathbf{f_{bp(2)}}-\mathbf{2f_{be(1)}}}{\mathbf{3F_b}'}\right| + \frac{\mathbf{2f_c}}{\mathbf{3F_c}'} \leq \mathbf{1.0} \qquad \text{(8-6.06B(1)-1)}$$

When the position of a pile in a Type I pile bent exceeds the driving tolerances shown on the shop drawings, the capacity of that pile may be estimated as follows:

1. Calculate the initial bending stress due to pile pull, $\mathbf{f_{bp(1)}}$, using the actual pull distance. If the calculated stress is less than the allowable stress of 4000 psi for the initial pull, calculate the relaxed bending stress, $\mathbf{f_{bp(2)}}$, see equations 8-6.05A-3 and 8-6.05A-7.
2. Calculate the bending stress due to pile lean, $\mathbf{f_{be(1)}}$, using the actual eccentricity distance, see equation 8-6.05E(1)-2.
3. Determine the direction of the applied bending moment at the relaxed point of pile fixity and the sign (positive or negative) of the two bending stresses.
4. Determine the stress due to axial compression, $\mathbf{f_c}$, using equation 8-6.05E(1)-3. Axial compression is not affected by the excessive pile pull or pile lean, therefore, the value to be used in this analysis is the value calculated for the design review.
5. Enter the stress values and solve the combined stress equation using equation 8-6.06B(1)-1. The load-carrying capacity of the pile in its driven position is satisfactory if the value of the combined stress equation is not greater than 1.0.

8-6.06B(2) Type II Pile Bents

When the pile to be evaluated is in a Type II pile bent, it is also necessary to consider the effect of horizontal deflection and the combined stress equation for the general case is:

$$\left|\frac{\pm f_{bp(2)} \pm 2f_{be(1)}}{3\mathbf{F_b}'}\right| + \frac{2\left[F_{bH}+f_{be(2)}\right]}{3\mathbf{F_b}'} + \frac{2f_c}{3\mathbf{F_c}'} \leq 1.0 \qquad \text{(8-6.06B(2)-1)}$$

As shown in the equation, both the relaxed bending stress, $\mathbf{f_{bp(2)}}$, and the stress due to pile lean, $\mathbf{f_{be(1)}}$, may be either positive or negative depending on the direction of bending, while the sum of the bending stresses produced by the horizontal design load, $\mathbf{f_{bH} + f_{be(2)}}$, is positive. The bending stresses from the horizontal design load are always considered positive because, even though the horizontal design load may act from either direction, it is applied from the direction that produces the highest combined bending stress in the analysis.

8-6.06B(3) Type III Pile Bents

When the pile to be evaluated is in a Type III bent, the final term in the numerator of the bending stress fraction is replaced by $\mathbf{f_{be(3)}}$ to account for the additional vertical load eccentricity produced by P-Δ deflection.

$$\left|\frac{\pm f_{bp(2)} \pm 2f_{be(1)}}{3F_b'}\right| + \frac{2\left[F_{bH} + f_{be(3)}\right]}{3F_b'} + \frac{2f_c}{3F_c'} \leq 1.0 \qquad \text{(8-6.06B(3)-1)}$$

8-6.06C Vector Analysis

In Section 8-6.06B, *Failure to Meet Driving Tolerance,* it was assumed that pile pull, pile lean, horizontal deflection are in the same plane. In practice, this would be an unlikely occurrence.

When the bending forces due to pile pull and pile lean act in different vertical planes, it is necessary to add the bending stress vectors geometrically and enter the resultant stress in the combined stress equation.

An analysis based on the assumption that pile pull and pile lean are in the same plane is conservative since it gives a larger combined stress equation value than an analysis that considers the direction of the bending forces. Therefore, it is not necessary to use stress vectors if the pile is acceptable using the same plane analysis.

It is a matter of engineering judgement to determine whether the relative direction of application of the bending forces is of sufficient importance to warrant vector analysis. As a guide, if the angle between the two bending planes is small, say less than about 30 degrees, same plane bending may be assumed, and the evaluation made on this basis.

If the value of the combined stress equation is less than 1.0, the pile under consideration is adequate. If the calculated value of the combined stress equation is greater than 1.0, judgment is required to determine whether reevaluation based on the direction of the applied loads using vector analysis will result in a satisfactory condition.

Generally, if the value is only slightly greater than 1.0, pile capacity should be reevaluated based on the direction of loads using vector analysis.

Figure 8-31, *Pile Vectors,* is a schematic plan view showing the:

- Location of the bottom of a pile as driven.
- Location of top of the same pile as driven.
- Location of the top of the pile after it is pulled into position under the cap.
- The direction of the pull and the direction of lean after pulling.
- Stress vector for the relaxed bending stress, $\mathbf{f_{bp(2)}}$.
- Stress vector for the bending stress due to pile lean, $\mathbf{2f_{be(1)}}$.
- Resultant of these two vectors, $\mathbf{f_{bR}}$.

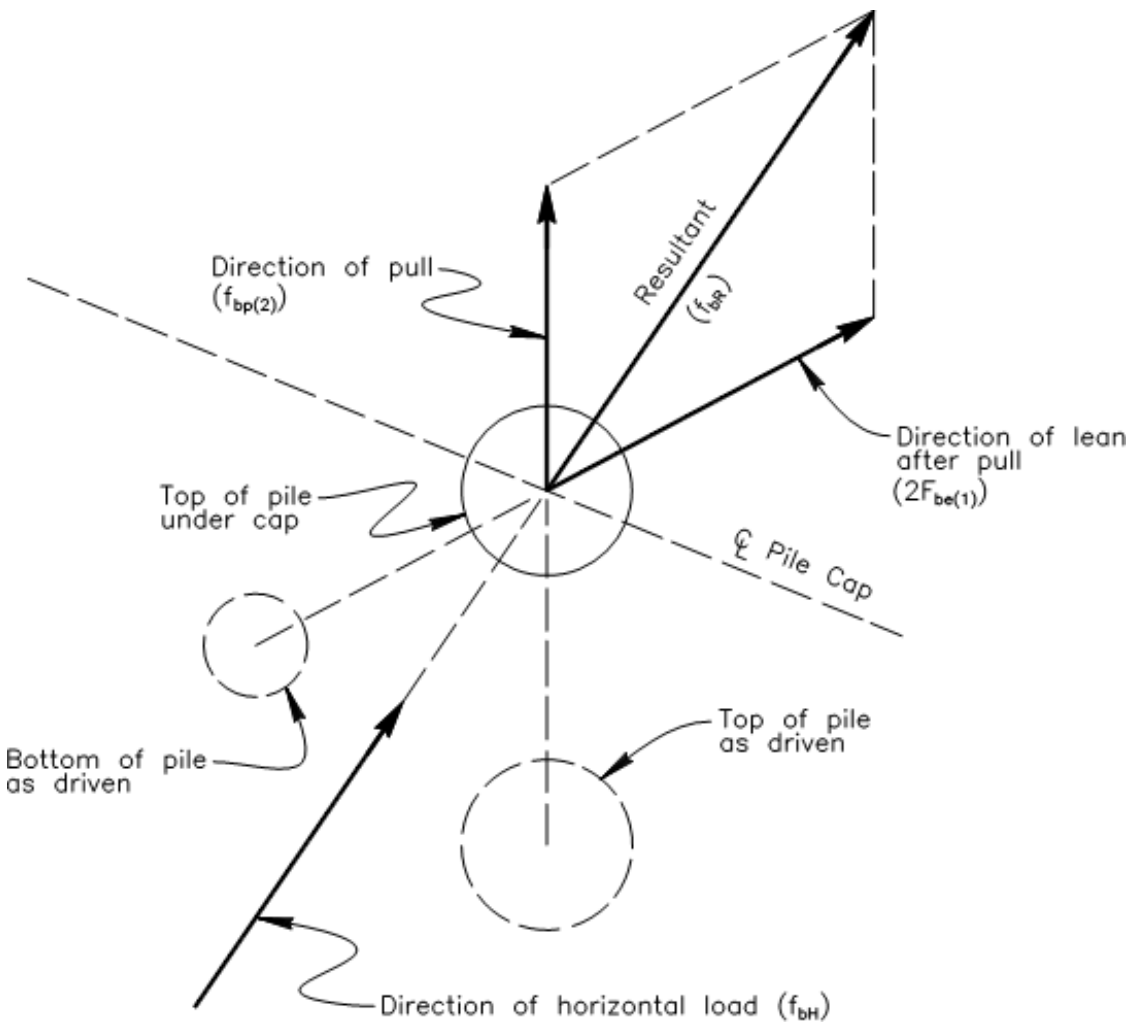

Figure 8-31. Pile Vectors.

The procedure for evaluating pile capacity using stress vectors is as follows:

1. Determine the direction of pull and the pull distance.
2. Calculate the initial bending stress due to pile pull, $\mathbf{f_{bp(1)}}$, using the actual pull distance. If the calculated stress is less than the allowable stress of 4000 psi for the initial pull, calculate the relaxed bending stress, $\mathbf{f_{bp(2)}}$, see Section 8-6.05A, *Effect of Pile Pull*.
3. Determine the direction of lean after the pile is pulled, and the magnitude of the lean.
4. Calculate the bending stress due to pile lean, $\mathbf{f_{be(1)}}$, using the actual eccentricity distance, see Sections 8-6.05E(1), *Type I Pile Bents*, 8-6.05E(2), *Type II Pile Bents*, and 8-6.05E(3), *Type III Pile Bents.*
5. Multiply the value obtained in step 4 by the load factor coefficient of 2 to obtain the stress value to use in the resultant calculation, $\mathbf{2f_{be(1)}}$.
6. Plot the stress vectors as shown in Figure 8-31, *Pile Vectors*. Plot the vectors outward from the center of the pile in the direction of pull and lean. While plotting is not essential to the calculation, it has two important advantages. First, a graphical portrayal of the problem provides a visual check on the direction and magnitude of the resultant. Second, if the vectors are plotted on a large enough scale, the resultant stress value may be scaled with sufficient accuracy to use in the remaining calculations.
7. Calculate (or scale) the resultant bending stress, $\mathbf{f_{bR}}$. Axial compression is not affected by the excessive pile pull or pile lean; therefore, it is unnecessary to recalculate the compressive stress.
8. Enter the stress values and solve the combined stress equation. The load carrying capacity of the pile in its driven position is satisfactory if the value of the combined stress equation is not greater than 1.0.

8-6.06C(1) Type I Pile Bents

For a pile in a Type I pile bent the combined stress equation is:

$$\frac{\mathbf{f_{bR}}}{\mathbf{3F_b}'} + \frac{\mathbf{2f_c}}{\mathbf{3F_c}'} \leq \mathbf{1.0} \qquad \text{(8-6.06C(1)-1)}$$

8-6.06C(2) Type II Pile Bents

For a Type II pile bent, the effect of horizontal deflection must be considered, but it is not necessary to consider the P-Δ deflection. However, since the bending stress produced by the horizontal load is not affected by excessive pull and/or excessive lean, the bending stress values to be used in the combined stress

equation are the values previously calculated. Moreover, the horizontal design load may act in any direction. For analysis purposes, the horizontal design load is assumed to act in the same direction as the resultant force, $\mathbf{f_{bR}}$, because this will produce the highest stress, see Figure 8-31, *Pile Vectors*. Therefore, all bending stresses will be additive.

For a pile in a Type II pile bent the combined stress equation is:

$$\frac{\mathbf{f_{bR}+2\left(f_{bH}+f_{bc(2)}\right)}}{\mathbf{3F_b{}'}}+\frac{\mathbf{2f_c}}{\mathbf{3F_c{}'}}\leq\mathbf{1.0} \qquad \text{(8-6.06C(2)-1)}$$

8-6.06C(3) Type III Pile Bents

For a Type III pile bent, the effect of horizontal deflection and P-Δ effect must be considered. However, since the bending stress produced by the horizontal load is not affected by excessive pull and/or excessive lean, the bending stress values to be used in the combined stress equation are the values previously calculated. Moreover, the horizontal design load may act in any direction. For analysis purposes, the horizontal design is assumed to act in the same direction as the resultant force, $\mathbf{f_{bR}}$, because this will produce the highest stress, see Figure 8-31, *Pile Vectors*. Therefore, all bending stresses will be additive.

For a pile in a Type III bent the combined stress equation becomes:

$$\frac{\mathbf{f_{bR}+2\left(f_{bH}+f_{bc(3)}\right)}}{\mathbf{3F_b{}'}}+\frac{\mathbf{2f_c}}{\mathbf{3F_c{}'}}\leq\mathbf{1.0} \qquad \text{(8-6.06C(3)-1)}$$