Chapter 7: Manufactured Assemblies

Table of Contents

Chapter 7: Manufactured Assemblies 1
Table of Contents 1
7-1 Introduction 3
7-1.01 General Information 3
7-1.02 Contractor's Manufactured Assemblies 3
7-2 Load Tests 4
7-2.01 Load Tests Introduction 4
7-2.02 Sand Jacks 6
7-2.03 Metal Shoring Systems 6
7-3 Miscellaneous Manufactured Assemblies 7
7-3.01 Wood Sand Jacks 7
7-3.02 Steel Sand Jacks 8
7-3.03 Beam Hangers 9
7-3.04 Deck Overhang Brackets 10
7-3.05 Metal Joist Assemblies 11
7-3.06 C-Clamps 12
7-3.07 Stringer Connector 15
7-3.08 Pile Friction Collars 17
7-3.09 Beam Clips 18
7-4 Metal Shoring Systems 19
7-4.01 Introduction 19
7-4.02 Safe Working Load and Factor of Safety 20
7-4.03 Design Criteria 21
7-4.04 Submittal 23
7-4.05 Review of Shop Drawings 24
7-4.06 Letters of Certification 25

7-4.07 Field Inspection 25
7-5 Previously Approved Metal Shoring Systems 25
7-6 Concrete Pads 26
7-6.01 Introduction 26
7-6.02 Authorized Concrete Pads 26
7-6.03 Other Concrete Pads 28

7-1 Introduction

7-1.01 General Information

The term *manufactured assembly* means any commercial product, the use of which is governed by conditions and/or restrictions imposed by the manufacturer. Manufactured assemblies routinely used in falsework construction include products such as jacks, hangers, clips, brackets, and similar hardware products, as well as all types of manufactured shoring systems. When authorized for use, such products may be incorporated into the falsework design.

The *Standard Specifications*, Section 48-2.02B(3)(d), *Stresses, Loadings, and Deflections – Manufactured Assemblies,* limit the load on, and/or the deflection of, any commercial product to the maximum recommended or allowed by the manufacturer of the product.

Allowable loads and conditions or limitations of use must be shown in a catalog or technical manual published by the manufacturer, or in a certificate of compliance from the manufacturer pertaining to a particular project. If a certificate of compliance is furnished in lieu of catalog data, it must be shown on the manufacturer's shop drawing or included in a letter. For the statement to be accepted by Structure Construction (SC), it must be provided and signed by the manufacturer of the product under consideration, not by a material supplier or the contractor.

The *Standard Specifications*, Section 48-2.01C(1), *Falsework – Submittals – General,* require the contractor to furnish a written certification stating that all components of the assembly are used in accordance with the manufacturer's recommendations. Moreover, the contractor is required to furnish technical data for manufactured assemblies, when requested by the engineer. It is good practice for the engineer to request catalog data or other technical information, as it may be needed to verify the load carrying capacity of any manufactured product proposed for use in the falsework system.

Some manufacturer's catalogs are very brief and show only general details. The engineer must be able to verify that the item is used as the manufacturer intended. It is the responsibility of the engineer to contact the contractor to obtain the substantiating technical data or statement of compliance signed by the product manufacturer.

7-1.02 Contractor's Manufactured Assemblies

Noncommercial products or devices fabricated by contractors, also referred to as "contractor's manufactured assemblies," such as sand jacks and deck overhang brackets, may also be incorporated into the design. However, these assemblies must be

tested per Section 7-2, *Load Tests,* before they can be authorized for use in falsework. The factor of safety is higher for noncommercial products or devices.

7-2 Load Tests

7-2.01 Load Tests Introduction

In any case where the shop drawings show or describe a manufactured product or device, which cannot be found in any catalog, a load test is required to establish the safe load carrying capacity of that product or device.

Load testing a commercially available product or device is intended to determine or verify the load carrying capacity of the product or device. Load testing must not be used to establish that a particular design detail or method of construction is capable of withstanding the imposed load without failing if the design calculations show that it is overstressed. Similarly, load testing must not be used to establish that the manufacturer's recommended load can be exceeded nor that the device can be used in a different manner than recommended by the manufacturer.

If a tested device is to be used on more than one job, the contractor must inform the structure representative of the intent to use a tested device. The structure representative must verify the submitted information by comparing it to the testing records in SC HQ.

7-2.01A Safe Working Load and Factor of Safety

Devices can be tested to a predetermined value or to failure. It is recommended to test the device to failure, in which case the safe working load may be taken as 1/2 the ultimate load. This will provide an **FS** = **2** with respect to failure, which is consistent with manufacturer's ratings for concrete form accessories. If it is not possible to test to failure, the working load used for the design should not exceed 1/2 of the maximum load carried during the test.

All testing of commercially available metal shoring systems must include a minimum **FS = 2.5**. See also Section 7-2.03, *Metal Shoring Systems,* and 7-4, *Metal Shoring Systems*.

The procedure discussed herein for load testing of manufactured assemblies will also apply to noncommercial items, such as noncommercial deck overhang brackets, fabricated by the contractor (i.e. contractor's manufactured assemblies). If the product is noncommercial, **FS = 3** is required, except for sand jacks, see Section 7-2.02, *Sand Jacks*.

7-2.01B Procedure

The load test can be performed in the contractor's yard or at the job site. The load test should be performed under conditions which will closely simulate the intended field use, particularly as to the method of support. The load test must be set up so that it accurately represents the use of the product. When performing a test of a manufactured assembly, follow these steps:

- Notify the engineer and the SC Falsework Engineer two weeks prior to performing testing.
- Before performing the test, the contractor must submit a testing procedure including shop drawings of the assembly, sketches of the testing equipment and setup, explaining what is being tested, how much load it is being tested for, and how the setup simulates field conditions.
- Before performing the test, the contractor must submit the annual certification record of the testing equipment performed by an independent third party.
- The testing procedure must be submitted to the Falsework Engineer in SC HQ for review and authorization. When authorized, the contractor may perform the test.
- The contractor must write a report of the test including the testing procedure, testing equipment certification, drawings of the tested assembly, test results, and photos. This report must be stamped by a civil engineer registered in the State of California and submitted to the Falsework Engineer in SC HQ.
- The structure representative and the Falsework Engineer or their delegates must witness the test and document the test procedure and results. These notes must be submitted to the Falsework Engineer in SC HQ.

Testing should, as a minimum, comply with the following:

- Test at least three identical assemblies or devices.
- The set up must include other necessary features unique to the system being tested.
- Measure strain, stresses, deflection, and other values as necessary to properly determine the adequacy of the device or as deemed necessary by the engineer.
- Apply load incrementally and hold load for one minute before taking readings. 10% incremental loading is recommended.
- Apply cyclic loading when deemed necessary by the engineer. It is recommended to use at least 10 cycles.
- The allowable load is the average of the test results divided by the factor of safety.

- Submit a statement certifying that all components duplicate field use of the proposed devices, components, or systems.

7-2.02 Sand Jacks

Sand jacks must be tested per Section 7-2, *Load Tests.* In addition, the specific requirement listed below must be satisfied:

- Hold the design load for 20 minutes with less than 1/16-inch increase in vertical displacement.
- Test the sand jack assemblies to twice the design load with less than 1-inch vertical displacement of the plunger. This provides an FS = 2.

7-2.03 Metal Shoring Systems

All commercially available metal shoring systems must be tested per Section 7-2, *Load Tests.* In addition, the specific requirement listed below must be satisfied:

- All testing must be performed by the manufacturer.
- Contractors may not perform their own testing on metal shoring systems.
- The test must demonstrate the adequacy of the proposed assemblies in resisting the design load (including the assumed horizontal load).

Past load test results, performed by the original manufacturer, that are compatible with the conditions of use may be acceptable as supporting documentation of the load carrying capacity of the shoring system. The test results must demonstrate the adequacy of the proposed assemblies in resisting the design load including the assumed horizontal load. Moreover, these test results must be sent to the Falsework Engineer in SC HQ for review and authorization.

The safe working loads for some older shoring systems previously used on Caltrans jobs were determined empirically from full scale load tests. The *Scaffolding, Shoring, and Forming Institute* and *Canadian Standards Association* provide recommendations for testing and rating shoring towers and components. The rating included a minimum **FS = 2.5**. In all cases of record, maximum values were obtained during tests under ideal conditions, in which the legs of the test tower were loaded uniformly and concentrically, and the tower was supported on a concrete pad to ensure an unyielding foundation. Results of tests in which the towers were loaded eccentrically, and/or lateral movement was allowed indicate a substantial reduction in capacity.

Noncommercial metal shoring systems may not be used.

7-3 Miscellaneous Manufactured Assemblies

7-3.01 Wood Sand Jacks

When wood sand jacks are used, the contractor has the following two options:

- Construct and use the authorized wood sand jacks. See Section 7-3.01A, *Authorized Wood Sand Jack.*
- Construct sand jacks that deviate from the authorized wood sand jacks and test them per Section 7-2, *Load Tests,* and 7-2.02, *Sand Jacks.*

Sand jacks must be new and manufactured for the current job. It is not acceptable to reuse old wood sand jacks.

Figure 7-1. Wood Sand Jacks.

7-3.01A Authorized Wood Sand Jack

The sand jack shown in Figure 7-2, *Authorized Wood Sand Jack,* is authorized for use on jobs in California. The allowable load is 68 kips and the anticipated settlement is 1/2-inch.

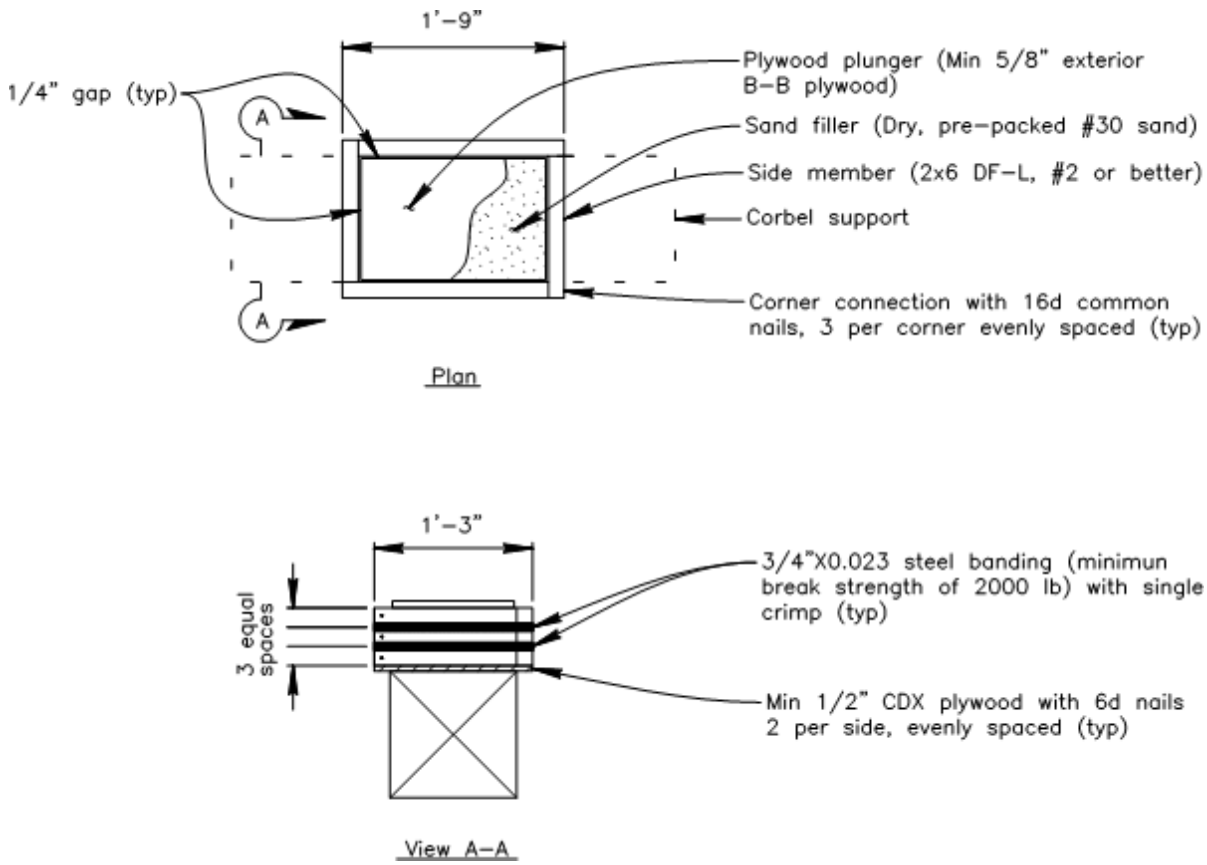

Figure 7-2. Authorized Wood Sand Jack.

7-3.02 Steel Sand Jacks

Steel sand jacks must be tested per Section 7-2, *Load Tests,* and 7-2.02, *Sand Jacks*. Steel sand jacks may be reused on other projects in the same configuration as they were tested if authorized by the structure representative. The shop drawing submitted for the steel sand jacks must be the same as those used for the test.

Figure 7-3. Steel Sand Jack.

7-3.03 Beam Hangers

Beam hangers are hardware items which are placed transversely across the top flange of a beam or girder. Threaded rods or bolts are supported by single or double channels, wire loops, or other methods as per the manufacturer. The rods or bolts hang vertically or diagonally to support deck falsework or overhang brackets. Figure 7-4, *Beam Hangers,* shows a generic beam hanger.

Unbalanced loading (loading only one side of the hanger) will reduce the load-carrying capacity of the hanger unless it is of a type designed to be loaded on one side at a time, or unless special measures are taken to hold the hanger in place. Special measures may include welding to studs or shear connectors. Beam hangers must not be welded to the top flange of a steel girder or to precast-prestressed girder stirrups.

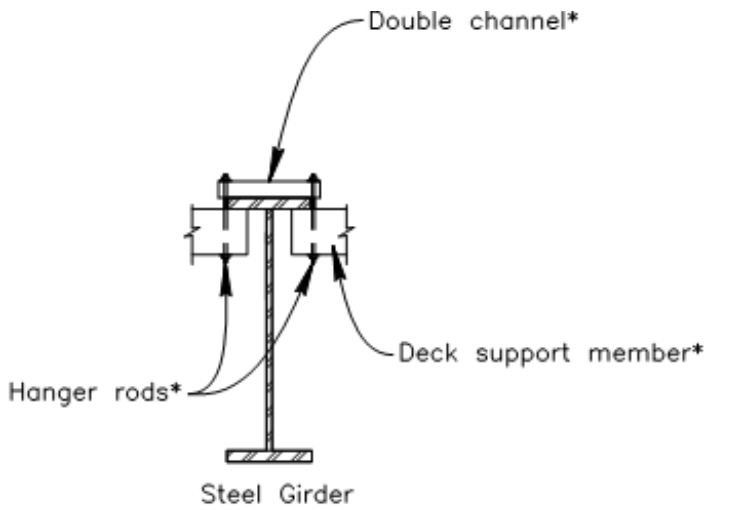

* Details vary as per manufacturer and contractor design

Figure 7-4. Beam Hangers.

7-3.04 Deck Overhang Brackets

Several types of commercial and noncommercial metal brackets specifically designed to support cantilevered deck overhangs are available. On some brackets the diagonal leg is wood. On precast concrete (PC) girders, these brackets are typically supported by beam hangers or by form bolt inserts cast into the top of the PC girder stems. On steel girders these brackets are typically supported by threaded rods or bolts extending through holes drilled in the web of steel girders. The brackets typically have a diagonal leg braced against the bottom flange of the girder.

The *Standard Specifications*, Section 55-1.03B, *Steel Structure – Construction – Falsework,* governing steel construction includes certain restrictions affecting the design of falsework supporting deck overhangs on steel girder bridges. See also Section 4-11, *Concrete Deck on Steel Girders*.

Bracket on PC girder **Bracket on steel girder**

Figure 7-5. Deck Overhang Brackets.

7-3.05 Metal Joist Assemblies

Metal joist assemblies are essentially metal beams, which can be adjusted to provide a wide range of span lengths. Catalog data should be provided showing the safe load carrying capacity and the allowable deflection. When joist assemblies are used to support deck slabs between girders, design load deflection is limited to the maximum deflection allowed by the manufacturer, which in some cases may exceed 1/240 of the span. At all other locations, the limit in the Standard Specification Section 48-2.02B(3)(c), *Design Criteria – Stresses, Loadings, and Deflections – Steel,* applies.

Figure 7-6. Metal Joists.

7-3.06 C-Clamps

Heavy-duty commercial or non-commercial C-clamps (Figure 7-7, C-*Clamps*) having a torque-tightening capacity of 90 ft-lb or more may be used as connecting devices in accordance with the criteria in this section.

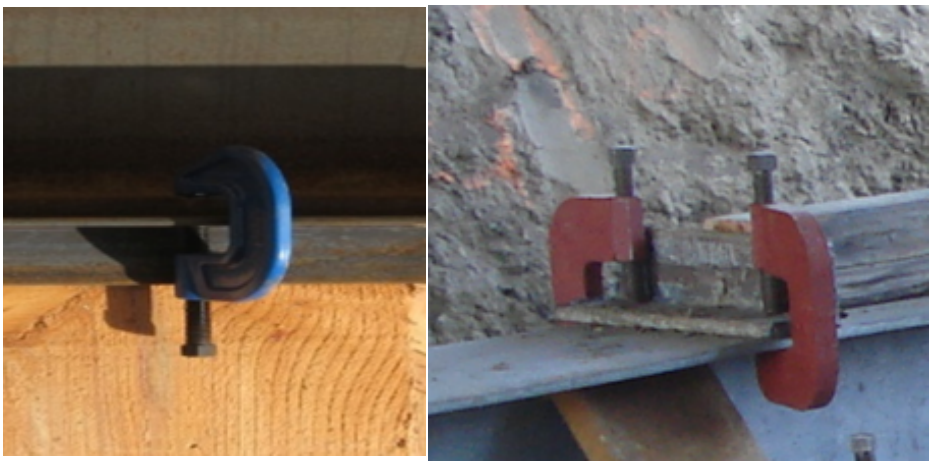

Commercial **Non-Commercial**

Figure 7-7. C-Clamps.

C-clamps used in conjunction with angles clamped to beams as show in Figure 7-8, *C-Clamp Installation*, will be permitted for transmitting forces in accordance with the criteria in this section. Other configurations must be tested per Section 7-2, *Load Tests*.

7-3.06A Commercial C-Clamps

Commercially available C-clamps must conform to the following:

- Heavy duty service pattern clamps with not less than a 10,000 lb. load limit (generally drop forged premium quality steel).
- Must remain elastic while withstanding a torque of 90 ft-lb load on the bolt.
- Bolt must be hardened machine bolt with cupped tip with a 3/4-inch diameter or greater.
- The contractor must furnish a catalog cut or manufacturer's technical data sheet describing the clamp in sufficient detail to verify compliance with product criteria listed in this section.

7-3.06B Non-Commercial C-Clamps

Non-commercial C-clamps must conform to the following:

- Clamps must be Grade A36 steel or higher.
- Must remain elastic while withstanding a torque of 90 ft-lb load on the bolt.
- Bolt must be hardened machine bolt with cupped tip with a 3/4-inch diameter.
- Dimension and details must be as shown in Figure 7-9, *Non-Commercial C-Clamp.*
- The shop drawings must include a sketch showing the dimensions and details of the clamp. The clamp must comply with restrictions and requirements in this section.

7-3.06C Working Load

The C-Clamp working loads stated below are based on test results:

- When used as shown in Figure 7-8, *C-Clamp Installation*, the two-clamp configuration can resist a maximum of 6000 lbs.
- When used without an angle iron, single C-clamps may be used as a mechanical connection at traffic openings for stringer to top cap connection to resist at most a 500 lb. load in any direction including uplift.

7-3.06D Use and Installation

The use and installation of C-clamps must be in conformance with the following:

- The location of the clamps must be shown on the shop drawings.
- Clamps must be torqued to 90 ft-lb. The shop drawings must include a note requiring all clamps to be torqued to a minimum of this value.
- All flanges, angle legs, plates, etc. to be connected must have constant thickness.
- Beams and caps must not be clamped together to resist longitudinal forces
- Clamps used to connect steel stringers to steel caps are to be placed on the heaviest loaded span side of the stringers.
- Must not be installed on the tail end of beams or stringers, but on the span side.
- May only be used for one purpose per installation, for example a clamp used to resist a 500 lb. force may not be used to resist other forces.

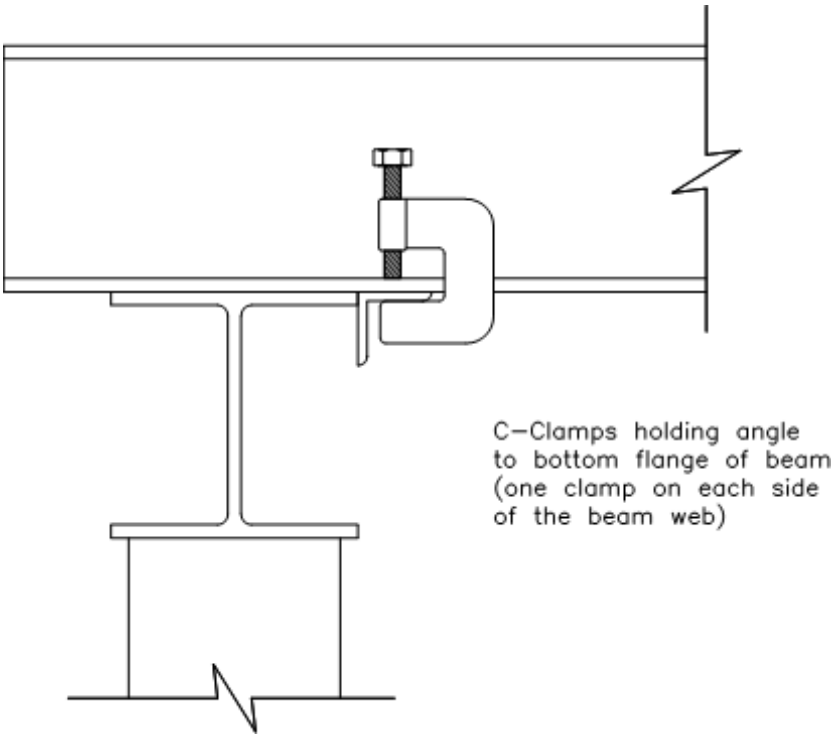

Figure 7-8. C-Clamp Installation.

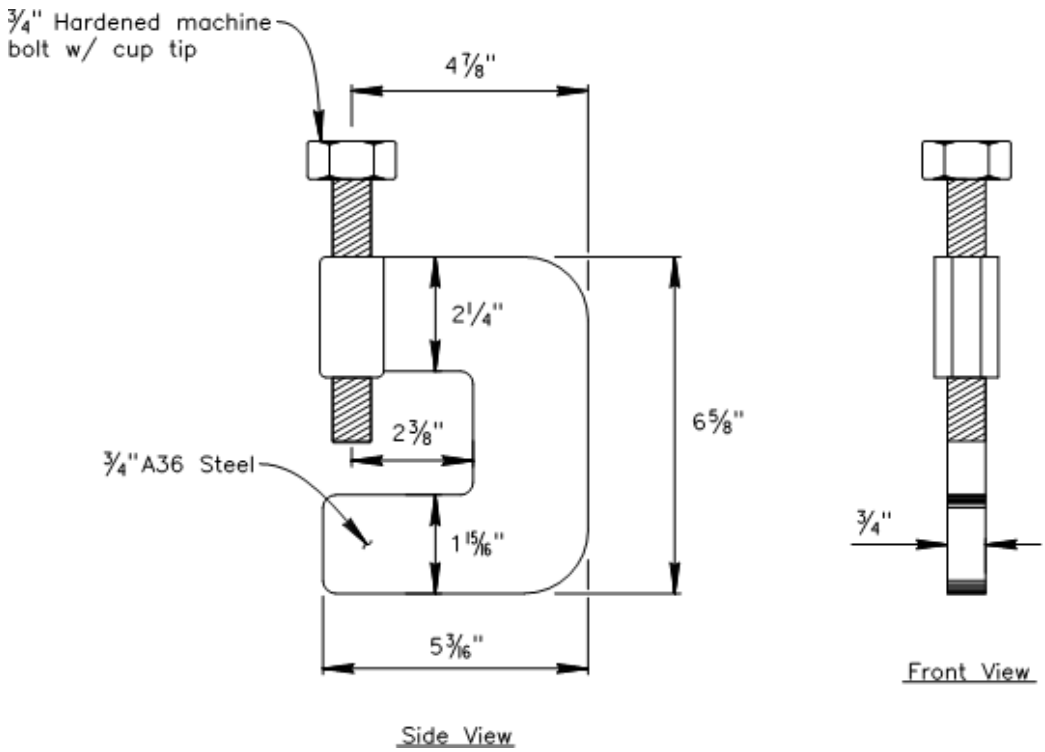

Side View **Front View**

Figure 7-9. Non-Commercial C-Clamp.

7-3.07 Stringer Connector

Stringer connectors are simple non-commercial connection devices used to transmit longitudinal forces along the length of falsework stringers.

Each stringer connector consists of two 1/2-inch thick A36 steel plates approximately 6-inches long by 2.50-inches wide, bolted at one end with a 3.5-inches long 7/8-inch diameter ASTM F3125, Grade A325 bolt. The lower plate is U-shaped, and the upper plate has a rectangular hole for the banding with a rounded edge where the banding attaches to the plate. The clips are typically installed on stringer top flanges with the lower plate clamping the stringer web, the bolt butting the end of the stringer, and the upper plate parallel to the banding. The banding is looped through the holes in the upper plates connecting the two clips. Figure 7-10, *Stringer Connector Details,* shows the connectors and method of installation on the stringers.

These stringer connectors have been tested and authorized for use in falsework to resist or transfer longitudinal forces in stringers.

7-3.07A Working Load

The stringer connector working loads are based on the stringer connectors shown in Figure 7-10, *Stringer Connector Details,* with a single 1.25 inches wide by 0.035" thick band. Higher loads will not be permitted. The approved working loads are:

- 5000 lbs. when the angle between center lines of banding and beam webs does not exceed 30°.
- For larger angles decrease the working load value by 1700 lbs. for each l0° increment in excess of 30°.

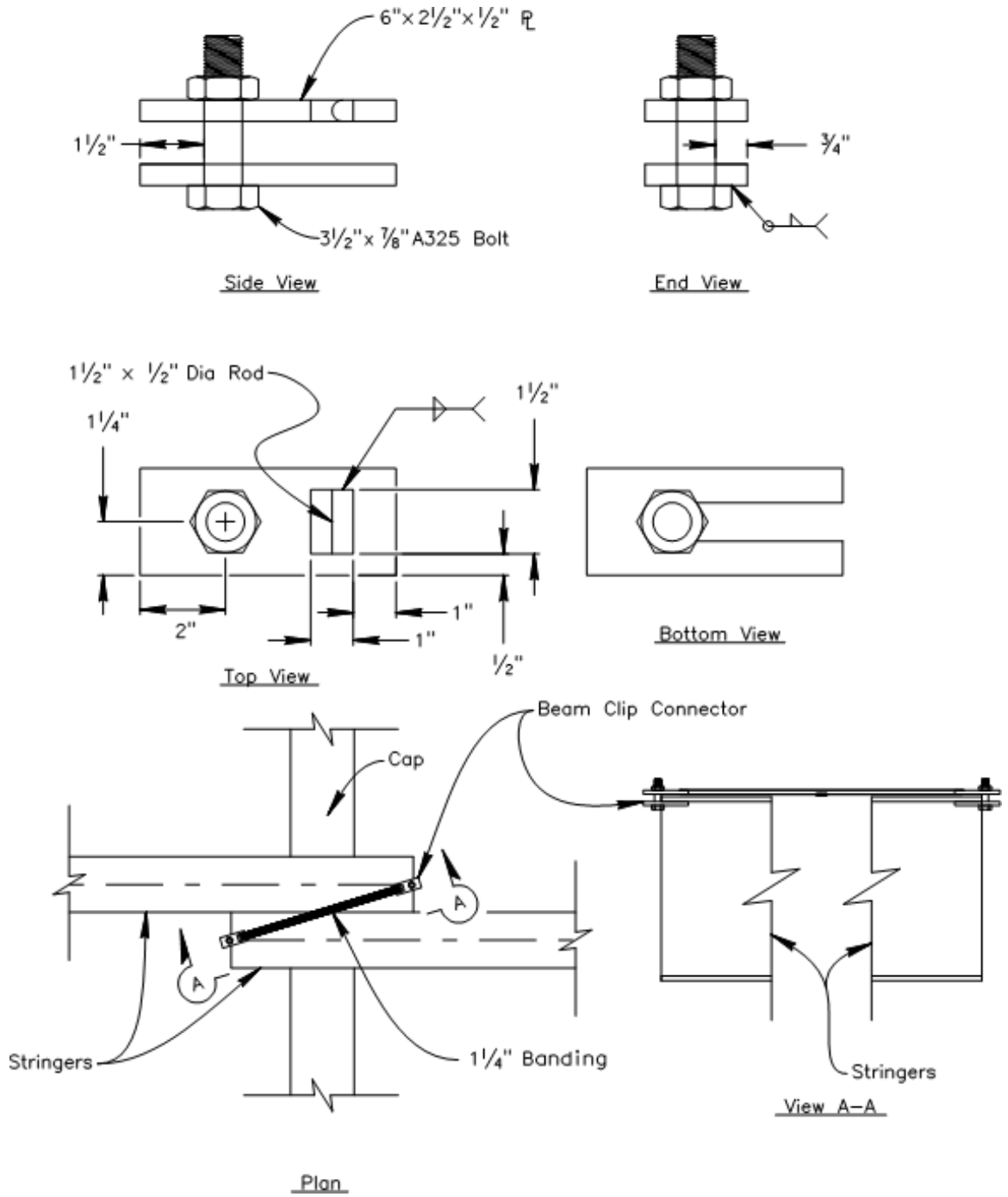

Figure 7-10. Stringer Connector Details.

7-3.08 Pile Friction Collars

Typically, the friction collar is used to permit erection of falsework on the friction collars before the piles for flat slab bridges are cut to grade. The falsework will normally be set on sand jacks which will be mounted atop the friction collar brackets. Friction collars must be installed per the manufacturer's recommendations.

Figure 7-11. Pile Friction Collar.

7-3.09 Beam Clips

Beam clips that conform to Figure 7-12, *Beam Clip,* and are fastened with a minimum of five 20D nails can be used to resist loads defined in *Standard Specifications*, Section 48-2.02B(4), *Special Locations*. Beam clips not conforming to Figure 7-12, *Beam Clip,* must be tested per Section 7-2, *Load Tests*.

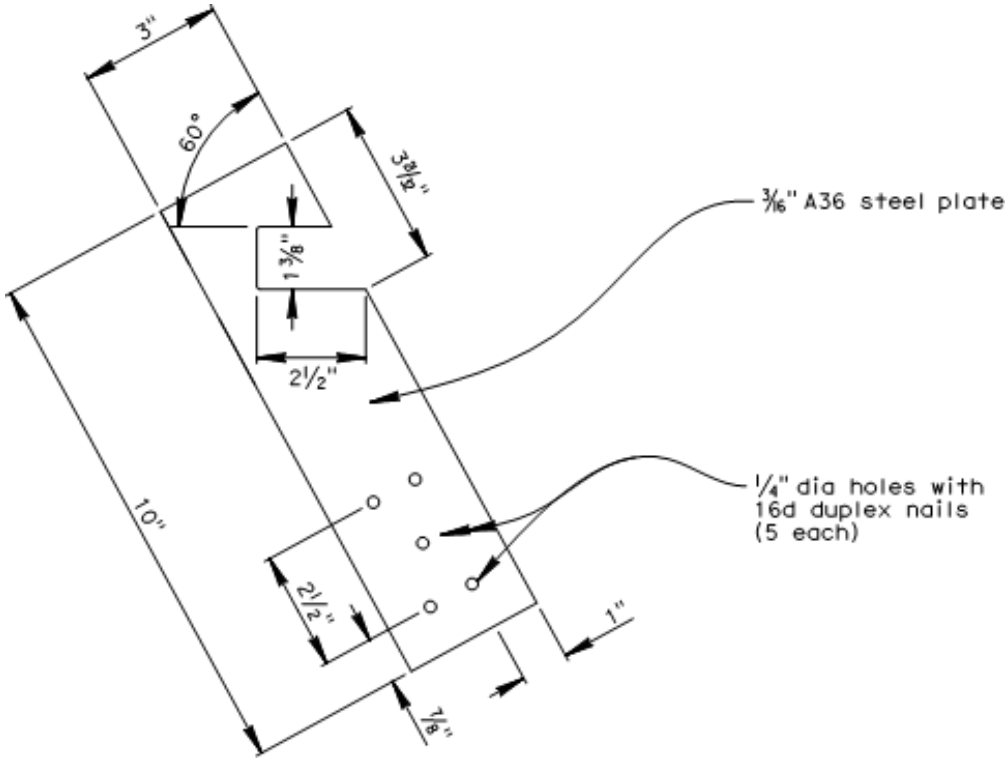

Figure 7-12. Beam Clip.

7-4 Metal Shoring Systems

7-4.01 Introduction

This section describes the general criteria and procedures to be followed when designing and reviewing metal shoring systems for compliance with the falsework specifications.

The term *metal shoring system* describes falsework consisting of individual components that may be assembled and erected in place to form a series of internally braced metal towers of any desired height. The tower legs, directly, or through a cap system, support the main load carrying members and transmit the load to a stable foundation. The use of metal shoring systems will require a complete submittal, review, and authorization process. The term *metal shoring system* includes all necessary bracing to stabilize the system and the cap beam connecting shoring towers.

Shoring towers are indeterminate space frames and therefore cannot be analyzed by the general formulas applicable to statically determinate framed structures. Manufacturers use empirical criteria developed from the effects of tower height, differential leg loading, side sway, and method of external support to determine the ability of metal shoring to safely carry a given load. Three-dimensional computer modeling is often used to design the system and full-scale load tests are performed to confirm the modeling. From this the manufacturer establishes the safe working loads. When used in projects, the contractor may be required to provide three-dimensional computer analysis (including electronic files) as part of the falsework submittal.

Figure 7-13. Heavy Duty Shoring System.

In the past, some proprietary metal shoring systems were analyzed and approved for use on state jobs. However, past approvals for these metal shoring systems are no longer valid. See Section 7-5, *Previously Approved Metal Shoring Systems*.

7-4.02 Safe Working Load and Factor of Safety

A metal shoring system is considered a manufactured assembly. Therefore, the maximum load to be carried must not exceed the safe working load recommended by the manufacturer for any given loading condition, see *Standard Specifications*, Section 48-2.02B(3)(d), *Stresses, Loadings, and Deflections – Manufactured Assemblies*.

The safe working load provided by the manufacturer must have a minimum **FS = 2.5**.

The shoring capacity, as shown in catalogs or brochures published by the manufacturer, should be considered as the maximum allowable safe working load that the shoring is able to safely support under ideal loading conditions. These maximum values must be reduced for adverse loading conditions often encountered in bridge falsework. For example, horizontal loads, eccentricity due to unbalanced spans or pouring sequence, and uneven foundation settlement are but a few of the loading conditions typical of

bridge falsework which differ from the loading conditions upon which the manufacturer's ratings are based.

Finally, the maximum allowable safe working load as recommended by the manufacturer is based on the use of new material or used material in good condition. Shoring components which are not in good condition will not be allowed for use in metal shoring systems.

7-4.02A Testing

For testing of metal shoring systems, see Sections 7-2, *Load Tests,* and 7-2.03, *Metal Shoring Systems*.

7-4.03 Design Criteria

Metal shoring systems must comply with all manufacturer's recommendations for condition, use, assembly, loading, foundation, and all other restrictions. Under no circumstances must the manufacturer's design criteria be exceeded. Metal shoring systems must be designed to meet the following criteria:

- Metal shoring systems must be independently designed and checked by two civil engineers registered in the State of California. This includes the entire shoring system with bracing for overturning and collapse and cap beams between shoring towers or units.
- The manufacturer's recommended safe working loads must be adjusted to consider material, site, and loading conditions. The maximum safe working load must be reduced for adverse loading conditions often encountered in bridge falsework.
- The shoring system must resist the sum of the dead loads and live loads and an assumed horizontal load in accordance with the requirements in Chapter 3, *Loads,* and *Standard Specifications*, Section 48-2.02B(2), *Design Criteria – Loads.*
- Steel beams used as continuous caps over two or more tower units require a complete stress analysis to determine the effect of continuity on tower leg loads. In many cases, particularly where large skews are involved, the falsework stringers will not be supported directly over a tower leg, therefore, both positive and negative bending moments will occur in the cap. Resulting moment and shear must be added to or subtracted from the simple beam reaction to obtain the actual leg load, and this may produce a significant load differential.
- The effect on the stress in the cap from differential leg loads, the resulting differential leg shortening, and differential foundation settlement must be accounted for.

- The maximum load on one leg of a tower should not exceed 4 times the load on any other leg under any given loading condition or sequence. The maximum load on one of the two frames making up a tower should not exceed 4 times the load on the opposite frame under any given loading condition or sequence. See Figure 7-14, *Leg Load in Shoring Tower.*
- Bracing must be provided to prevent overturning, collapse, and lateral deflection at the top of the shoring system.
- When investigating the stability of a multiple tower bent, any advantage gained from the theoretical transfer of the point of application of the vertical forces as the towers start to tip must be neglected.
- In a multiple tower bent where a continuous cap is not used, each tower must be independently braced to resist the horizontal load applied to that tower because the supported falsework above the towers is not capable of transferring horizontal forces.
- Screw jacks will not be allowed at the bottom of shoring towers. Towers must be installed plumb on level foundations.
- The foundation must be designed to ensure that the vertical loads are uniformly distributed and differential settlements are minimized.
- For individual shoring towers with maximum leg loads exceeding 30 kips, the foundation must be designed to provide uniform settlement under all legs of the tower.
- Timber pads or cribbing, while generally adequate for conventional falsework construction, may not be adequate to minimize differential settlement and ensure uniform settlement under metal shoring systems. Tower manufacturers will generally recommend concrete to ensure an unyielding foundation. Under adverse foundation conditions, cast-in-drilled-hole piles may provide the best value solution.
- Elastic shortening of the aluminum posts must be included in net settlement considerations.
- Wind loads on towers may be computed as outlined in Section 3-3.03, *Wind Loads.*
- Comply with *Standard Specifications*, Section 48-2.02B(4), *Design Criteria – Special Locations,* when constructed at the applicable locations.
- Metal shoring systems that have been altered must not be used. If a job specific alteration is necessary, the alteration must be independently designed and checked by two civil engineers registered in the State of California.

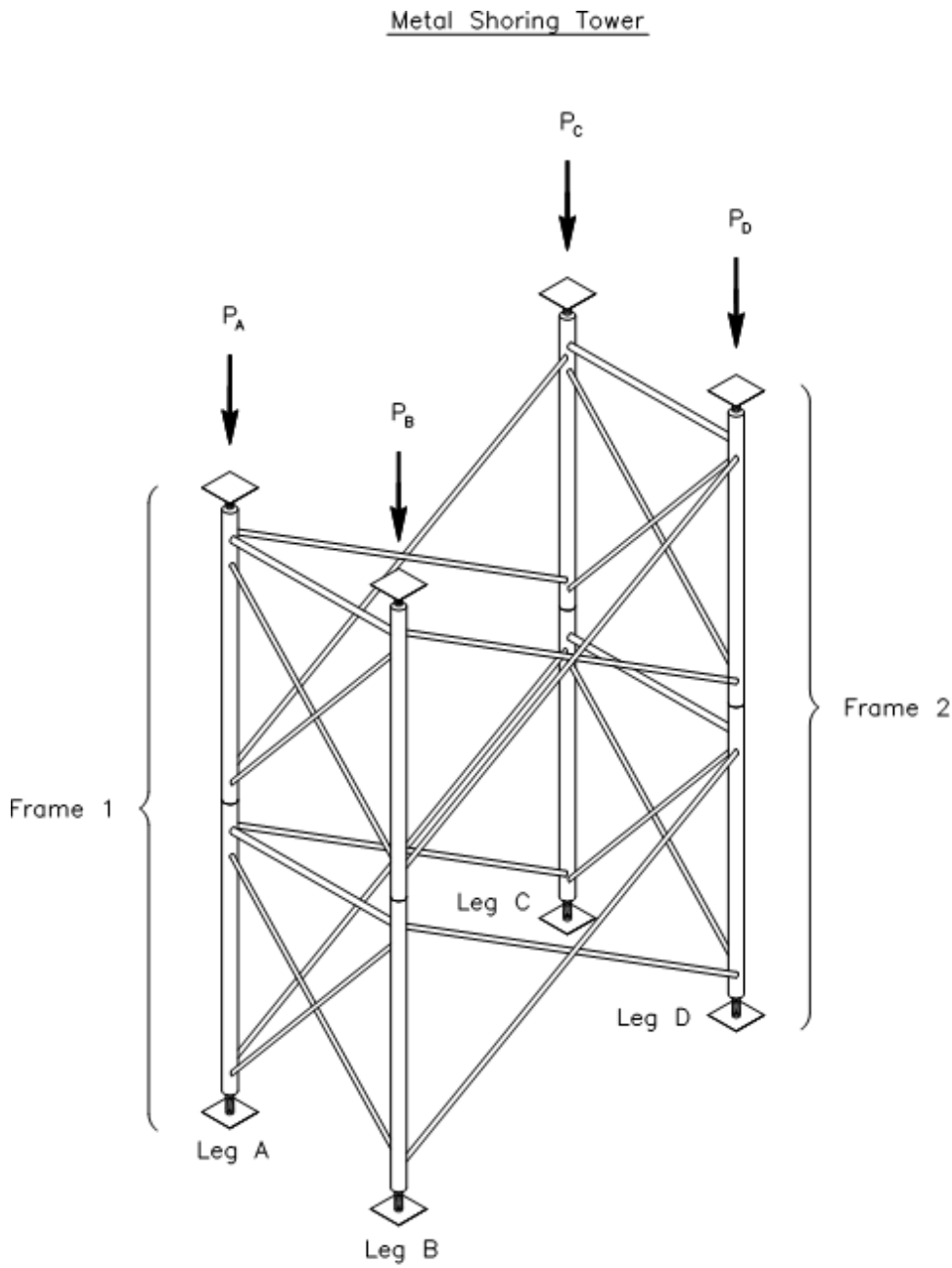

Maximum Leg Load in Tower: $P_A \leq 4P_{B,\ C\ or\ D}$

Maximum Frame Load in Tower: $P_A + P_B \leq 4(P_C + P_D)$

Figure 7-14. Leg Load in Shoring Tower.

7-4.04 Submittal

Metal shoring system submittals must include:

- Shop drawings in accordance with the *Standard Specifications*, Section 48-2.01C(2), *Submittals – Shop Drawings*. Shop drawings must be sealed and signed by the designer and the checker.
- Design calculations sealed and signed by the designer.
- Check calculations sealed and signed by the checker.
- Manufacturer's data to verify the manufacturer's recommendations, including safe working loads and corresponding factor of safety.
- The bracing system, including all construction details, must be shown on the shop drawings.
- Limits of screw jack extensions and the corresponding load rating must be shown on the shop drawings.
- Statement signed by the shoring manufacturer covering the specific installation. The statement must expressly provide that the shoring will carry the loads to be imposed without overstressing any component of the metal shoring system or reducing the required factor of safety. The statement is a condition for authorization of the falsework design. If the contractor cannot or does not furnish the statement, the shop drawings must not be authorized.

Upon request by the engineer, perform and provide test data demonstrating the adequacy of the proposed assemblies in resisting the design load (including the assumed horizontal load). Past load test results that are compatible with the conditions of use may be acceptable. Refer to Section 7-2.03, *Metal Shoring Systems,* for testing requirements.

Upon request by the engineer, perform and provide results from rigorous three-dimensional analysis demonstrating the adequacy of the proposed assemblies in resisting the design load (including the assumed horizontal load). Past analysis that are compatible with the conditions of use may be acceptable. Provide electronic calculations and models of the analysis.

Prior to concrete placement, A letter of certification that certifies all components of the metal shoring system are used in compliance with the manufacturer's recommendations, in accordance with the *Standard Specifications*, Section 48-2.01C(1), *Falsework – Submittals – General.*

7-4.05 Review of Shop Drawings

Review the metal shoring system shop drawings according to the requirements in Chapter 2, *Review of Shop Drawings*. Verify that the metal shoring system complies with Section 7-4.03, *Design Criteria*.

The structure representative or the civil engineer registered in the State of California reviewing the submittal must consult with the Falsework Engineer in the SC HQ when reviewing metal shoring systems.

Similar systems may be load rated differently depending upon the bracing type used in the frame. For example, towers with ladder type frames typically have a much lower rating than similar towers with cross braced frames.

The extension of screw jacks affects the load rating of shoring systems.

7-4.06 Letters of Certification

The *Standard Specifications*, Section 48-2.01C(1), *Falsework – Submittals – General,* requires the contractor to submit a letter of certification, which certifies that all components of the manufactured assembly are used in accordance with the manufacturer's instructions. In addition, the *Standard Specifications*, Section 48-2.01C(2), *Falsework – Submittals – Shop Drawings,* and the Cal-OSHA Construction Safety Order §1717(c)(1), *Falsework and Vertical Shoring – Inspection,* require another certification, which certifies that the falsework (which the shoring is part of) is constructed as shown in the authorized shop drawings before concrete is placed.

7-4.07 Field Inspection

Chapter 9, *Inspection* provides the guidelines for the field inspection of metal shoring systems.

7-5 Previously Approved Metal Shoring Systems

In the past, some proprietary metal shoring systems were analyzed and approved for use on state jobs. However, past approvals for these metal shoring systems are no longer valid for the following reasons:

- The proprietary metal shoring systems are often leased to many contractors for multiple types of applications and the conditions of the metal shoring components may not be the same as when they were first analyzed.
- Liability issues as ownership of those proprietary systems may have changed, especially when those reviews were done many years ago.
- Material specifications have changed in some instances and SC has not been informed of the changes.

Information about these shoring systems is available from the Falsework Engineer in SC HQ and can be used as a reference for when reviewing similar shoring systems.

7-6 Concrete Pads

7-6.01 Introduction

Concrete pads may be used as an alternative to timber pads. When concrete pads are used, the contractor has the following two options:

- Construct and use the authorized concrete pads per Section 7-6.02, *Authorized Concrete Pads.*
- Design and construct concrete pads that deviate from the authorized concrete pads per Section 7-6.03, *Other Concrete Pads*:

7-6.02 Authorized Concrete Pads

The pads shown in Figure 7-15, *Authorized Concrete Pad,* are authorized for use on projects in California. 12 x 12 timber corbels may be used, but it is more common to use steel beam corbels, which are anchored into the concrete. Both timber and steel corbels must be installed as shown in Figure 7-15, *Authorized Concrete Pad*. Lifting cables or bars are commonly installed in the concrete.

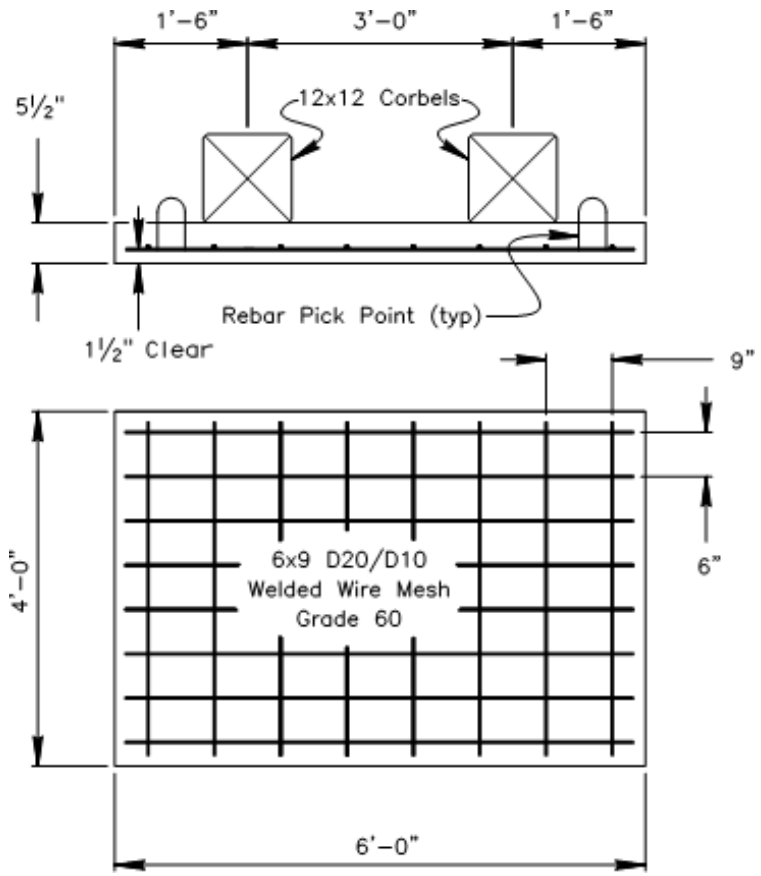

Figure 7-15. Authorized Concrete Pad.

7-6.02A Working Load

These pads are designed for these maximum loads:

- Soil pressure of 4000 psf
- 100 kips post load with two corbels supporting the post load as shown in Figure 7-16, *Concrete Pads with Cap Beam*.

Figure 7-16. Concrete Pads with Cap Beam.

7-6.02B Design Criteria

Design and analysis were completed using text book load factor design (LFD) for concrete. The concrete pads meet the criteria of wood pads as outlined in Section 8-2.04D, *Pad Analysis at Exterior Post*.

The pads must comply with the following requirements:

- Dimensions: 6 feet long by 4 feet wide by 5.5 inches thick.
- Both timber and steel corbels must be installed as shown in Figure 7-15, *Authorized Concrete Pad*. The location of the corbel is critical to the flexural strength of the pad.
- The corbels must extend across the full width of the pad.
- Concrete strength must not be less than **f′c** = 3500 psi.
- The reinforcing welded wire mesh must be D20/D10 Grade 60, spaced at 6 inches transversely and 9 inches longitudinally.
- The longitudinal bars in the welded wire mesh must be located at the bottom of the mesh.
- The clearance to the longitudinal reinforcing bars in the mesh from the bottom of the pad must be 1.5 inches.

7-6.02C Certificate of Compliance

A certificate of compliance from the pad fabricator must be obtained for concrete pads to be used on the project. The certificate of compliance must:

- Certify that the concrete meets the compressive strength requirements.
- Certify that the steel mesh is of the type and quality specified.
- Certify that the pad is fabricated as indicated in Figure 7-15, *Authorized Concrete Pad.*
- Be stamped by a civil engineer registered in the State of California.
- State how the individual pads can be identified in the field.

7-6.03 Other Concrete Pads

If the contractor chooses not to use the authorized concrete pads, the contractor may design and fabricate other concrete pads. These pads must comply with the requirements in the following sections.

7-6.03A Design Criteria

The design of the pads and corbels must comply with these requirements:

- The pads must be designed and independently checked by two civil engineers registered in the State of California.
- The pads must be designed using the latest AASHTO Bridge Design Specifications for concrete pads.
- Timber corbels must be designed using the current *Falsework Manual*.
- Steel corbels must be designed using the latest AASHTO Bridge Design Specifications or latest AISC manual for steel.
- Submit the design details, design calculations, and check calculations to the Falsework Engineer in SC HQ for review and authorization for use in California.
- The design must include the maximum allowable soil pressure, the maximum allowable post load, and the required bearing area between the post and corbel.

7-6.03B Testing

The Falsework Engineer in SC HQ will determine if testing of the pads is required for authorization, in accordance with Section 7-2, *Load Tests*.

7-6.03C Certificate of Compliance

Once the pads are authorized for use in California, a certificate of compliance from the pad fabricator must be obtained for concrete pads to be used on the project. The certificate of compliance must:

- Certify that the concrete meets the design compressive strength requirements.
- Certify that the steel mesh is of the type and quality specified.

- Certify that the pad is fabricated as per the submitted design and details. The details of the pads and the authorization will be available from the Falsework Engineer in SC HQ.
- Be stamped by a civil engineer registered in the State of California.
- State how the individual pads can be identified in the field.