Chapter 5: Analysis

Table of Contents

Chapter 5: Analysis 1
Table of Contents 1
5-1 Introduction 4
5-1.01 Design Requirements 4
5-1.02 General Design Assumptions 4
5-2 Timber Members 5
5-2.01 Introduction 5
5-2.02 Member Size 5
5-2.03 Allowable Stresses and Load Duration 5
5-2.04 Timber Beams 6
5-2.05 Timber Posts 15
5-2.06 Structural Composite Lumber 16
5-3 Timber Fasteners 19
5-3.01 Introduction 19
5-3.02 Connector Design Values 19
5-3.03 Nails and Spikes 19
5-3.04 Bolted Connections 22
5-3.05 Lag Screw Connections 25
5-3.06 Multiple Fastener Connections 25
5-3.07 Drift Pin and Drift Bolt Connections 26
5-3.08 Adjustment for Duration of Load 26
5-4 Steel Members 26
5-4.01 Design Criteria 26
5-4.02 Allowable Stresses 27
5-4.03 Bending Stresses 27
5-4.04 Bi-Axial Bending 28

5-4.05 Flange Buckling 31
5-4.06 Beam Shear 34
5-4.07 Web Yielding 35
5-4.08 Web Crippling 35
5-4.09 Flange Bending 36
5-4.10 Lateral Web Buckling 37
5-4.11 Timber Blocking 37
5-4.12 Steel Posts 38
5-4.13 Steel Bracing 38
5-4.14 Welding Steel Members 39
5-4.15 Miscellaneous Steel Components 40
5-5 Cable Bracing Systems 40
5-5.01 Introduction 40
5-5.02 Required Information 41
5-5.03 Manufacturer's Technical Data 42
5-5.04 Cable Connector Design 42
5-5.05 Cable Elongation 45
5-5.06 Factor of Safety 45
5-5.07 Limitations and Conditions of Use 46
5-5.08 Cable Design Load for Overturning 47
5-5.09 Review Criteria for Cable Bracing Systems 47
5-5.10 Cable Load Tests 58
5-5.11 Splicing Cable 58
5-5.12 Cable Connection to Shackles 58
5-5.13 Cable Anchor Systems 60
5-6 Short Poured-In-Place Concrete Piles 61
5-6.01 Introduction 61
5-6.02 Pile Uplift 62
5-6.03 Lateral Loads 65
5-6.04 Concrete Stresses 75
5-6.05 Bar Reinforcing Stresses 76
5-6.06 Resistance to Combined Uplift and Horizontal Load 77

5-7 Combining Stresses 79
5-7.01 Introduction 79
5-7.02 Design Criteria 79
5-8 Longer T-Beam Falsework Spans 80
5-8.01 Introduction 80
5-8.02 Design Criteria 80

5-1 Introduction

5-1.01 Design Requirements

The design stresses and deflections set forth in the *Standard Specifications*, Section 48-2.02B(3), *Stresses, Loadings, and Deflections,* are the maximum stresses and deflections allowed for a given loading condition. Loads are to be applied in accordance with the practice and procedures discussed in Chapter 3, *Loads*. Individual members of the falsework system, as well as the system as a whole, must be capable of resisting the specified design loads without exceeding the allowable values.

Shop drawings are not to be authorized in any case where the calculated stress or deflection in any member exceeds the allowable stress or deflection.

5-1.02 General Design Assumptions

In general, stresses in load carrying members of the falsework system may be determined by using the general formulas of civil engineering design applicable to statically determinate structures.

For some of the elements of the falsework system that are statically indeterminate, Structure Construction (SC) has developed specific methods and procedures to be used when investigating system adequacy. These procedures, which are applicable to diagonal bracing, metal shoring systems, pads, and pile bents, are explained in this manual in Chapter 6, *Stability,* Chapter 7, *Manufactured Assemblies,* and Chapter 8, *Foundations*, respectively.

The load carrying capacity of commercial products, such as jacks, beam hangers, deck overhang brackets, and other similar items, should be determined by reference to a manufacturer's published literature. The capacity can also be determined by a load test performed in accordance with Section 7-2, *Load Tests*.

The load imposed on falsework beams and stringers by the slab support system of closely spaced joists is actually applied as a series of concentrated loads. An equivalent uniform load may be assumed when calculating stresses in these members.

The effect of beam continuity must be investigated. Any theoretical advantage resulting from continuity should be neglected; however, the adverse effects must be considered to prevent overstressing of any falsework member. See Section 4-3, *Beam Continuity*.

The entire falsework system, as well as its component members, should be capable of resisting all imposed loads. The following items may contribute to the overall load to be carried by the member that is under investigation including:

- Any direct or redistributed load caused by beam continuity.
- Construction sequences.
- Prestressing.
- Deck shrinkage.
- Similar design and construction features which may contribute additional load.

5-2 Timber Members

5-2.01 Introduction

Wood differs from other building materials in that it is organic in nature, non-homogeneous, and composed of tube-like cells many times longer than they are wide. The cellular structure of wood fibers along with natural defects that develop as a tree grows are factors which result in a wide variation in the physical properties and characteristics of cut lumber. See Appendix A, *Wood Characteristics,* for a comprehensive discussion of the physical properties and characteristics of wood as a structural building material.

5-2.02 Member Size

Timber members should be assumed as S4S unless shown otherwise on the shop drawings.

The dimensions of rough cut lumber may vary appreciably from the theoretical dimension, particularly in the larger sizes commonly used in falsework construction. If the use of rough cut lumber is anticipated by the design, the actual member size must be verified prior to use.

5-2.03 Allowable Stresses and Load Duration

The allowable stresses for timber are based on the National Design Specifications (NDS), as specified in the *Standard Specifications*, Section 48-2.02B(3)(b), *Timber*. The load duration factor, $\mathbf{C_D}$, for typical falsework construction is:

- $\mathbf{C_D}$ = 1.25 based on an assumed duration of load of approximately 7 days

Occasionally a situation may occur where the falsework will be loaded for a long period of time, such as when a continuous structure is constructed in stages. In these cases, the appropriate load duration factor should be used based on the anticipated duration.

Appropriate load duration factors are discussed in Section 5-3.08, *Adjustment for Duration of Load*.

For the allowable stresses on camber strips and cap beam center loading strips, see Sections 4-2.02A, *Camber Strips,* and 4-4, *Cap Beam Center Loading Strips*, respectively.

5-2.04 Timber Beams

5-2.04A Beam Span

For simple beams, the span length is the clear distance from face-to-face of supports, plus one-half the required bearing length at each end.

For continuous beams, the span length is the center-to-center distance between supports over which the beam is continuous. For end spans of continuous beams, the span length is the distance between the center-of-bearing at the continuous support and the point of end support determined in accordance with the simple beam rule stated in the preceding paragraph.

5-2.04B Bending and Deflection

The extreme fiber stress due to bending is:

$$\mathbf{f_b = \frac{Mc}{I} \ \ or \ \ f_b = \frac{M}{S}} \qquad (5\text{-}2.04B\text{-}1)$$

where $\mathbf{f_b}$ = Bending stress (psi)

M = Bending moment (in-lb)

c = Distance from the neutral axis to the extreme fiber (in)

I = Moment of inertia of the section about the neutral axis (in^4)

S = Section modulus (in^3)

Deep narrow beams may require lateral support to prevent the compression edge from buckling before the allowable bending stress is reached. See Section 5-2.04E, *Lateral Support of Wood Beams*.

The maximum deflection of a uniformly loaded simple beam is:

$$\Delta = \frac{\mathbf{5wL^4}}{\mathbf{384EI}} \qquad (5\text{-}2.04B\text{-}2)$$

where Δ = Deflection (in)

w = Uniformly distributed load (lb/in)

L = Beam span (in)

E = Modulus of elasticity (psi)

I = Moment of inertia (in^4)

5-2.04C Horizontal Shear

The general equation for horizontal shear in a rectangular beam **b** inches wide and **d** inches deep is:

$$\mathbf{f_v} = \frac{\mathbf{3V}}{\mathbf{2bd}} = \frac{\mathbf{3V}}{\mathbf{2A}} \qquad (5\text{-}2.04C\text{-}1)$$

where $\mathbf{f_v}$ = Maximum horizontal shearing-stress (psi)

V = Vertical shear (lb)

A = Cross sectional area of the beam (in^2)

b = Width of beam (in)

d = Depth of beam (in)

Theoretically, the strength of a wood beam in horizontal shear is a function of the strength property for the wood type and the extent to which a particular beam may be checked or split at the end. However, tests by the U.S. Forest Products Laboratory and others have shown that with split beams, the shear force is not uniformly distributed as assumed by the shear equation. Instead, in a split or checked beam, the upper and lower halves of the beam each resist a portion of the total horizontal shear force independently of the force resisted by the beam at the neutral axis. Therefore, a split or checked beam is capable of carrying a larger load than would appear to be the case using the general shear equation. Investigation of this phenomenon led to the derivation of so-called two-beam or checked-beam formulas from which the horizontal shearing stress may be determined with greater accuracy.

The horizontal shearing stress should be computed using equation 5-2.04C-1.[1] When computing the total shear, **V**, to use in the equation, neglect all loads within a distance from the face of the support equal to the depth of the beam, **d**. If the allowable stress is

[1] The *Falsework Check* program uses the general formula for rectangular sections to calculate horizontal shear. However, this does not apply when load transfer to supporting members is with a mechanical connection.

exceeded when computed by the general equation, and if the contractor's beam design is based on the use of the checked-beam method of analysis, the shear value, **V**, may be determined by using the checked-beam formulas, and this value used in the horizontal shear calculation.

A discussion of checked-beam theory is not included in this manual because horizontal shear is seldom critical in bridge falsework spans. However, a discussion of the checked-beam method of analysis may be found in the NDS and other timber design manuals and reference is made thereto. The load within depth of the member applies to beam bearing on top of the support and not when the beam is connected with bolts/nails to the supporting member to transfer shear.

5-2.04D Compression Perpendicular to the Grain

Compression perpendicular to the grain at beam supports is:

$$\mathbf{f_{C\perp}} = \frac{\mathbf{P}}{\mathbf{A}} \qquad (5\text{-}2.04D\text{-}1)$$

where $\mathbf{f_{C\perp}}$ = Compression stress perpendicular to the grain (psi)

P = Applied load (lb)

A = Bearing area (in^2)

Initially when a beam deflects, the pressure on one edge of the support is greater than that of the other. However, wood yields enough so that the pressure equalizes and overstressing does not occur.

The use of the bearing area factor, $\mathbf{C_b}$, is permitted in the analysis of bridge falsework for small members having a bearing length, $\mathbf{L_b}$, of less than 6 inches and the contact area is 3 inches or more from the end of a supporting member, see Figure 5-1, *Effective Bearing Area*. The increase accounts for the additional wood fibers that resist the applied load after the supporting member becomes slightly indented. The bearing area factor is determined by:

$$\mathbf{C_b} = \left(\frac{\mathbf{L_b} + \frac{3}{8}}{\mathbf{L_b}}\right) \qquad (5\text{-}2.04D\text{-}2)$$

$$\mathbf{A_e} = \mathbf{AC_b} \qquad (5\text{-}2.04D\text{-}3)$$

where $\mathbf{C_b}$ = Bearing factor (in)

L_b = Bearing length (in)

A = Actual bearing area (in^2)

A_e = Effective bearing area (in^2)

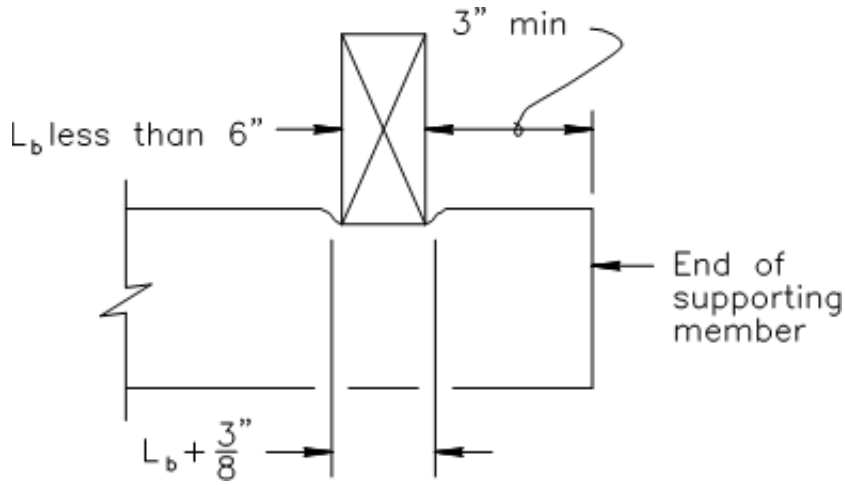

Figure 5-1. Effective Bearing Area.

To facilitate construction at locations where a conventional support may not be feasible, falsework members are occasionally supported by rods or dowels cast into a previous concrete pour. For example, lost deck forms may be supported by a ledger beam bearing on dowels cast into the girder stem. In this or any other case where a timber member bears directly on a round support, there will be some yielding of the wood fibers as the load is applied, and some crushing will occur.

Timber members supported by steel bars must comply with the following:

- Lost deck forms are supported by 2-inch nominal and wider ledger beams, bearing on either 5/8-inch or 3/4-inch diameter reinforcing bar dowels, and provided the dowel extends far enough from the face of the concrete to ensure full-width bearing under the ledger: a vertical design load of 900 lb maximum may be used on each dowel.
- For all other cases where timber members bear directly on steel bars, bearing capacity will be verified by means of an “equivalent bearing length” equal to 1/2 the bar diameter. If the calculated stress based on an equivalent bearing length of 1/2 the bar diameter does not exceed the allowable stress, the detail may be authorized even though some crushing will occur.

When a timber member is bearing on a round support, the bearing area obtained by using an equivalent bearing length may not be increased further by applying the effective area factor previously discussed. Combining the two procedures would take

unreasonable advantage of the bridging ability of wood fibers, and thus is not permitted for analysis.

5-2.04E Lateral Support of Wood Beams

Beams having a large depth-to-width ratio may fail due to lateral buckling (in much the same manner as long columns) before the allowable bending stress is reached. To avoid this mode of failure the beams must be restrained and forced to deflect in the plane of the load. The amount of restraint needed to ensure beam stability is a function of the depth-to-width ratio, however, it is not subject to precise analysis.

Beam stability must be designed according to NDS 4.4.1, *Stabillity of Bending Members,* using the applicable beam stability factor $\mathbf{C_L}$.

5-2.04F Beam Rollover

In this section, the term beam includes any horizontal load carrying member of the falsework system, including joists. When timber beams are placed in other than a true vertical position, they will have a tendency to rotate about their base as the load is applied. This rotational tendency, commonly referred to as beam rollover, is an indication of instability, which must be investigated during the engineering analysis.

The tendency of beams to roll over when placed on a sloping surface is a function of the height and width of the beam, the load, and the slope on which the beam is placed. Beam rollover should be investigated in all cases where beams are set on a sloping surface. The procedure in Section 5-2.04F(1), *Investigation of Rollover Stability,* describes how to find the limiting beam height for a given load, slope, and beam width.

In addition to rollover stability, beams placed on a sloping surface require a further check to verify that the allowable compressive stress is not exceeded at the down slope corner of the beam.

5-2.04F(1) Investigation of Rollover Stability

For analysis of beam rollover, it is assumed that the vertical load acts as a concentrated load on the top center of the beam. Figure 5-2, *Beam Rollover Forces at Sloping Support,* shows that the load transfers through the beam to the surface in contact with the supporting member through a vertical line. The beam will be stable against rollover if the line of the vertical load reaction lies within the beam width.

When moments are taken about the down slope corner of a beam placed on a sloping surface, as indicated by point A in Figure 5-2, *Beam Rollover Forces at Sloping Support*, the beam will be stable against rollover provided the resisting moment (RM) exceeds the overturning moment (OTM).

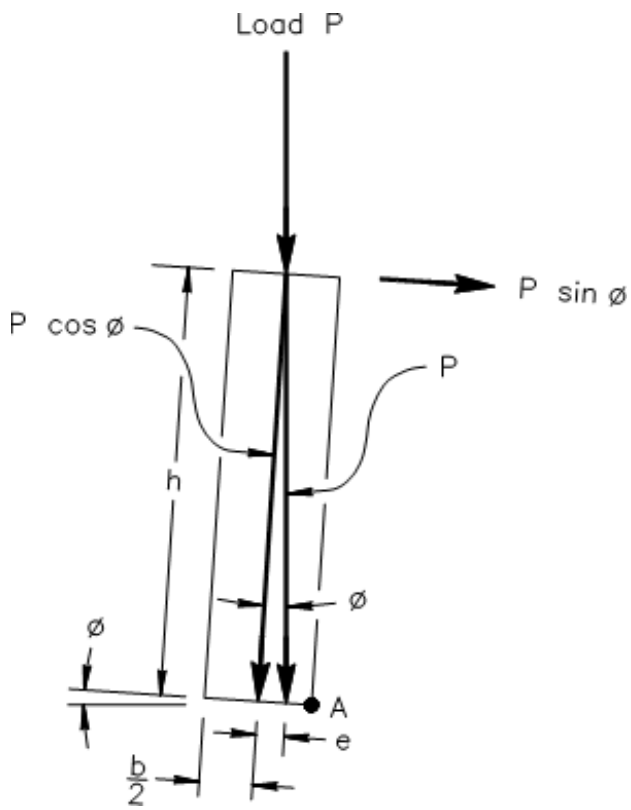

Figure 5-2. Beam Rollover Forces at Sloping Support.

For a given slope and beam load, there is a limiting beam height-to-width relationship. For a given width, the limiting height, **h**, is determined as follows:

$$\mathbf{OTM = RM} \qquad \text{(5-2.04F(1)-1)}$$

$$\mathbf{h(P)\sin\emptyset = b/2\ (P)\cos\emptyset} \qquad \text{(5-2.04F(1)-2)}$$

$$\mathbf{(h)\tan\emptyset = b/2} \qquad \text{(5-2.04F(1)-3)}$$

$$\mathbf{h = b/2\tan\emptyset \approx b/[2\ (s/100)]} \qquad \text{(5-2.04F(1)-4)}$$

$$\mathbf{h \approx 50b/s} \qquad \text{(5-2.04F(1)-5)}$$

where **P** = Load on the beam (lb)

h = Height of the beam (in)

b = Width of the beam (in)

s = Slope (%)

Ø =Tilt angle (deg)

As an example, the limiting slope, **s**, for a 2 x 10 (1.5" x 9.25") beam is calculated as follows:

$$\mathbf{s = 50\frac{b}{h} = \frac{50(1.5")}{9.25"} = 8.1\%} \qquad \text{(5-2.04F(1)-6)}$$

5-2.04F(2) Investigation of Compressive Stress

As the slope on which the beam rests increases, the compressive bearing stress between the beam and the supporting member at the down slope edge of the beam increases. This is the case because the center of gravity of the load acting through the top center of the beam remains vertical. The stress at the down slope edge is determined as follows:

- Calculate the compressive stress for normal bearing on the area between the beam and the supporting member as shown in Figure 5-3(a), *Beam Contact Pressure at Sloping Support:*

$$\mathbf{f_{c(a)} = P(\cos\emptyset)/A} \qquad \text{(5-2.04F(2)-1)}$$

where $\mathbf{f_{c(a)}}$ = Normal compressive stress (psi)

P = Load (lb)

Ø = Slope angle, so that **PcosØ** is the load component acting perpendicular to the bearing surface (deg)

A = Bearing area or contact area (in^2)

- Calculate the stress due to vertical load eccentricity, see Figure 5-3(b), *Beam Contact Pressure at Sloping Support:*

$$\mathbf{f_{c(b)} = Pe(\cos\emptyset)/S} \qquad \text{(5-2.04F(2)-2)}$$

where $\mathbf{f_{c(b)}}$ = Stress produced by the eccentric loading condition (psi)

e = Distance from the centerline of the beam at the bearing surface to the vertical reaction line (in)

S = Section modulus of the contact area (in^3), see Figure 5-4, *Beam Support Contact Area*

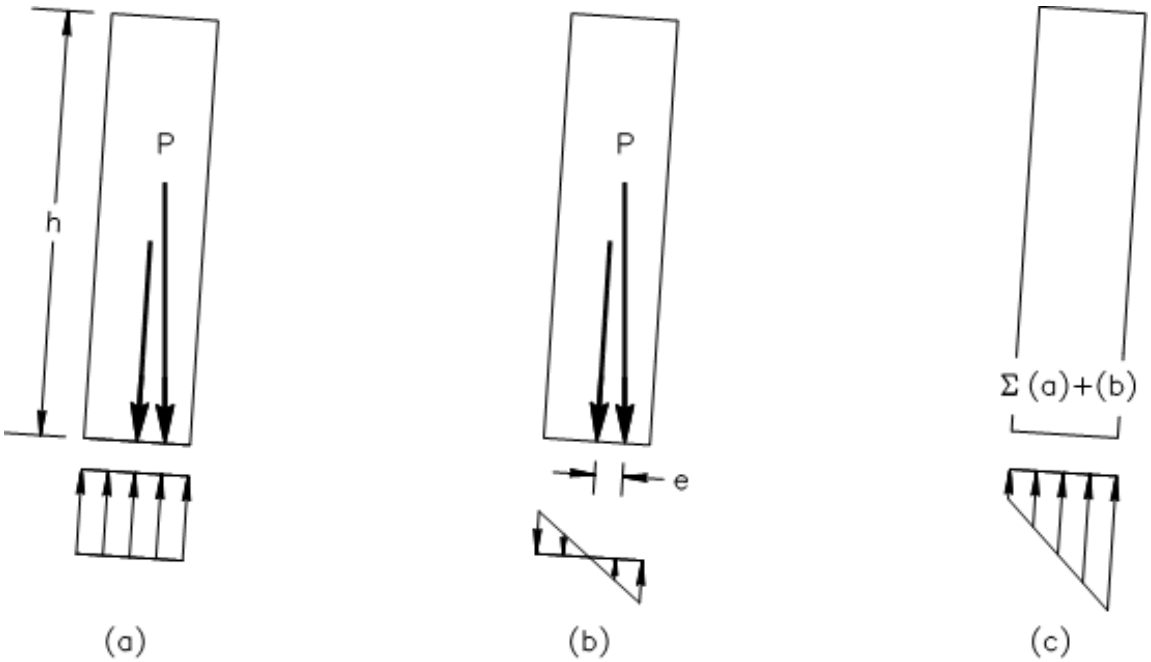

Figure 5-3. Beam Contact Pressure at Sloping Support.

- The sum of the stress values $\mathbf{f_{c(a)}}$ and $\mathbf{f_{c(b)}}$ will give the total compressive stress at the down slope edge of the beam, as shown in Figure 5-3(c), *Beam Contact Pressure at Sloping Support*.

$$\mathbf{f_{c(c)} = f_{c(a)} + f_{c(b)}} \qquad \text{(5-2.04F(2)-3)}$$

where $\mathbf{f_{c(a)}}$ = Normal compressive stress (psi)

$\mathbf{f_{c(b)}}$ = Stress produced by the eccentric loading condition (psi)

The calculated bearing stress on the down slope edge of a beam must not exceed the specified allowable bearing stress.

As an example, the bearing stress on the down slope edge of a 2 x 10 (1.5" x 9.25") beam on a 6% cross slope resting on a 1.5 inch wide camber strip where the design load is 500 lb is calculated as follows:

$$\mathbf{\emptyset = \tan^{-1}\left(\frac{6}{100}\right) = 3.43^{o}} \qquad \text{(5-2.04F(2)-4)}$$

$$\mathbf{A = 1.5in \text{ x } 1.5in = 2.25\ in^2} \qquad \text{(5-2.04F(2)-5)}$$

$$\mathbf{S = \frac{ba^2}{6} = \frac{1.5" \text{ x } (1.5")^2}{6} = 0.563 \text{ in}^3} \quad \text{(5-2.04F(2)-6)}$$

$$\mathbf{e = h(\tan 3.43^o) = 9.25in(\tan 3.43^o) = 0.554 \text{ in}} \quad \text{(5-2.04F(2)-7)}$$

$$\mathbf{f_{c(a)} = \frac{500^{\#}(\cos 3.43^o)}{2.25in^2} = 222 \text{ psi}} \quad \text{(5-2.04F(2)-8)}$$

$$\mathbf{f_{c(b)} = \frac{500^{\#}(0.554in)(\cos 3.43^o)}{0.563in^3} = 491 \text{ psi}} \quad \text{(5-2.04F(2)-9)}$$

Final stresses is:

$$\mathbf{f_{c(a+b)} = 491 \text{ psi} + 222 \text{ psi} = 713 \text{ psi} < 900 \text{ psi}} \quad \text{(5-2.04F(2)-10)}$$

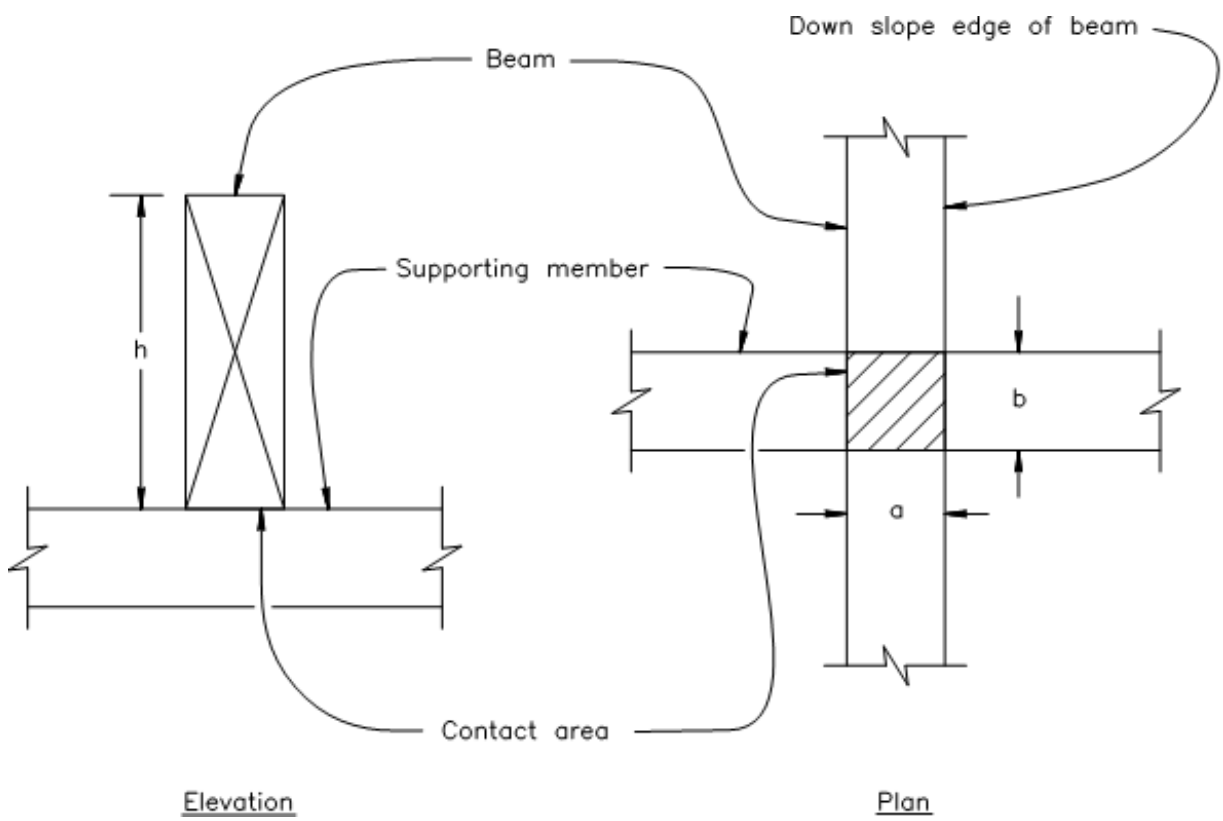

Figure 5-4. Beam Support Contact Area.

5-2.04F(3) Blocking to Prevent Rollover

The tendency of a beam to roll over is an independent condition of instability, therefore, blocking to prevent beam rollover occurs independently of any requirement for blocking or other means of support to ensure beam stability as discussed in Section 5-2.04E, *Lateral Support of Wood Beams*.

Beams which are unstable against rollover when investigated in accordance with the procedures described in sections 5-2.04F, *Beam Rollover,* and 5-2.04F(1), *Investigation of Rollover Stability,* must be made stable by the use of full depth blocking at the beam ends. Additionally, when the slope exceeds 8%, the following apply:

- If the nominal depth-to-width ratio is equal to or less than 4:1, blocking should be provided at mid-span.
- If the nominal depth-to-width ratio is greater than 4:1, blocking should be provided at the 1/3 points of the span.

Toe-nailing to the supporting surface in lieu of blocking will not be permitted for joists that are subject to rollover since the joist can break at the toe-nailed location.

5-2.05 Timber Posts

Timber falsework posts may be considered as pinned at the top and bottom, regardless of the actual end condition, except for driven timber pile bents, which can be considered fixed at a point below ground, see Section 8-6.04, *Timber Piles in Pile Bents*.

Timber posts must be designed in accordance with NDS 3.6, *Compression Members – General.*

The allowable compressive stress, $\mathbf{F_c'}$, is calculated by multiplying the reference design value, $\mathbf{F_c}$, by applicable adjustment factors as shown in NDS Table 4.3.1, *Applicablity of Adjustment Factors for Sawn Lumber*. Reference design values are tabulated in the NDS Supplement.

The combination of compressive stresses parallel to the grain and bending stresses due to buckling are considered in the design of timber posts. To account for buckling, NDS applies a column stability factor, $\mathbf{C_P}$, per NDS 3.7.1, *Column Stability Factor* $\boldsymbol{C_P}$.

The calculated axial unit stress, $\mathbf{f_c}$, in compression parallel to the grain is determined by dividing the total load by the cross sectional area of the post:

$$\mathbf{f_c = P/A} \qquad (5\text{-}2.05\text{-}1)$$

where $\mathbf{f_c}$ = Compressive stress parallel to the grain (psi)

P = Axial load (lb)

A = Cross sectional area of the post (in^2)

5-2.05A Round and Tapered Posts and Piles

Round and tapered posts and piles shall be designed per NDS 3.7.2 *Tapered Columns*, NDS 3.7.3, *Round Columns,* and NDS Chapter 6, *Round Timber Poles and Piles*.

For round members, the minimum dimension, **d**, should be taken as the length of the side of a square post whose area is equal to the cross sectional area of the round post being used. Round and square posts, having the same cross sectional area, have approximately equal stiffness and therefore carry approximately the same load. This procedure will give results, which are accurate within five percent for posts of the size and length ordinarily encountered in falsework construction.

$$\mathbf{d} = \sqrt{\frac{\pi \mathbf{D}^2}{4}} = \sqrt{\pi \mathbf{R}^2} \qquad (5\text{-}2.05\text{A-}1)$$

where **d** = Side of square post with same cross sectional area as round post with diameter **D** (in)

D = Diameter of round post (in)

R = Radius of round post (in)

5-2.06 Structural Composite Lumber

This section sets forth the practice with respect to the use of structural composite lumber (SCL) as a falsework material.

Except as otherwise provided in this section, all specification requirements and all *Falsework Manual* practice and procedures governing the use of timber members will apply to the use of SCL.

Structural composite lumber is usually marketed commercially as an engineered wood product intended for use as a structural building material and has been used for general building purposes, including limited use in falsework construction. Certain SCL products are manufactured and designed specifically for bridge forming applications.

For inspection and certificate of compliance requirements see Section 9-2.02A, *Structural Composite Lumber*.

5-2.06A General Information

Structural composite lumber is a natural wood product in which the harvested logs are debarked and either peeled or stranded. The resulting veneers or strands are then coated with adhesives and compressed to permanently bond the wood fibers. The finished product is a stronger, straighter and more homogeneous material than conventional lumber.

ASTM D5456 covers test specimen qualification procedures, testing methods and procedures, evaluation of test results, and assignment of design values. The ASTM specification covers composite lumber products which meet the following definitions. SCL intended for structural use is defined as one of the following:

- *Laminated veneer lumber* (LVL): a composite of wood veneer sheet elements with wood fibers primarily oriented along the length of the member. Veneer thickness must not exceed 0.25-inches.
- *Parallel strand lumber* (PSL): a composite of wood strand elements with wood fibers primarily oriented along the length of the member. The least dimension of the strands shall not exceed 0.25-inches, and the average length must be a minimum of 300 times the least dimension.
- *Laminated strand lumber* (LSL): a composite of wood strand elements with wood fibers primarily oriented along the length of the member. The least dimension of the strands must not exceed 0.10-inch, and the average length must be a minimum of 150 times the least dimension.
- *Oriented strand lumber* (OSL): a composite of wood strand elements with wood fibers primarily oriented along the length of the member. The least dimension of the strands must not exceed 0.10-inch, and the average length must be a minimum of 75 times the least dimension.

Typically, NDS dimension lumber sizes, 2 x 4, 4 x 4, 2 x 6, etc., are manufactured from LVL composites, while PSL composites are used for the NDS timber sizes 5 x 5 and larger. LSL and PSL are included as SCL products within ASTM D5456, however, there may not be any manufacturers that market either LSL or PSL for bridge forming applications LSL is typically used as a non-structural edge form material.

Design stress values are a function of grade and wood species, and in some cases the depth and orientation of the member as well. The grade (quality) of a particular lot of material is determined by the modulus of elasticity. Higher modulus values generally correlate with higher allowable design values.

Allowable working stress values are obtained from strength tests on material specimens. Since SCL is a more uniform product than natural wood they can have substantially higher design working stress values than those of even the best grades of lumber. This is largely due to the fact that design values for wood products are based on a characteristic value, which is typically in the lower fifth percentile value. Since strength properties of engineered wood products are more consistent across a population, having a lower coefficient of variation (CoV), the lower fifth percentile value for these products can be substantially higher than for solid sawn lumber, even from the same wood species and timber sourcing region. ASTM adjustment factors from which allowable working stresses are derived are considerably lower for SCL than the corresponding factors for solid sawn wood. These lower adjustment factors result in higher design working stress values for SCL than are allowed for even the best grades of sawn lumber.

The ASTM specification covers procedures for evaluating specific material properties and for determining design values, including bending strength and stiffness, tensile strength parallel to the grain, compressive strength parallel and perpendicular to the grain, and horizontal and vertical shear, along with procedures for maintaining quality assurance in manufacturing. However, the ASTM specification expressly excludes determination of design values for connections.

5-2.06B Design Criteria

The design criteria for SCL is not specifically covered by the *Standard Specifications*, Section 48, *Temporary Structures,* except that the use of SCL is permitted for falsework construction per the *Standard Specifications*, Section 48-2.01C(2), *Shop Drawings,* and as provided herein.

Any intended use of SCL must be indicated by a note on the shop drawings. The note must clearly identify the SCL members by grade (E value), species and type (e.g., 2.0E DF *Trade Name* LVL, or similar notation).

Shop drawings showing the use of SCL must be accompanied by a manufacturer's published literature and an International Code Council (ICC) report, if available. The technical data shown must include tabulated working stress values for normal load duration and dry service conditions. SCL used for falsework must be manufactured for outdoor use.

The design must be based on working stress using the manufacturer's tabulated values. The stress values:

- Must not exceed the lesser of the manufacturer's tabulated values or the ICC report.

- Must be adjusted as recommended by the manufacturer for member size or orientation.
- Do not need to be decreased for wet service conditions.

When used as a horizontal load carrying member, the deflection must comply with Section 4-2.01, *Beam Deflection*.

5-3 Timber Fasteners

5-3.01 Introduction

Timber fasteners must be designed per NDS Chapter 11, *Mechanical Connections*. The allowable value in shear, **Z'**, and withdrawal, **W'**, is calculated by multiplying the reference design value, **Z** and **W**, by applicable adjustment factors as shown in NDS Table 11.3.1, *Applicablity of Adjustment Factors for Connections*. Reference design values for dowel type fasteners are determined per NDS 12.2, *Reference Withdrawal Design Values,* and 12.3, *Reference Lateral Design Values*.

Dowel type fasteners are defined as bolts, lag screws, wood screws, nails, spikes, drift bolts, and drift pins.

5-3.02 Connector Design Values

Design values for both lateral load resistance and withdrawal resistance for wood fasteners in various wood species have been standardized by the timber industry, and are available in NDS. Douglas Fir-Larch is commonly used for construction in California.

The design values in NDS are for normal duration of load, and may be increased for the shorter load durations typical of bridge falsework. See Section 5-3.08. *Adjustment for Duration of Load*.

5-3.03 Nails and Spikes

5-3.03A Design Values

The tabulated values are for an individual nail or spike. When more than one nail or spike is used in a connection, the total design value for the connection is the sum of the design values for the individual nails or spikes. This is due to the Group Action Factor, $\mathbf{C_g}$, being equal to 1.0 for dowel type fasteners with a diameter, **D**, less than 1/4-inch, see NDS 11.3.6, *Group Action Factors*.

The tabulated design values are for a nail or spike driven into the side grain of the member holding the point with the axis of the nail or spike perpendicular to the direction of the wood fibers.

Diameters shown in the design tables apply to fasteners before application of any protective coating.

5-3.03A(1) Withdrawal Resistance

Nails and spikes have little resistance to withdrawal when driven into the end grain of a wood member. The use of connections where the nail or spike is subject to withdrawal from the end grain of wood will not be permitted.

5-3.03A(2) Lateral Resistance

The tabulated design values apply to lateral loads acting in any direction.

When a nail or spike is driven into the end grain of a wood member, the design value is multiplied by the end grain factor:

- $\mathbf{C_{eg}}$, per NDS 12.5.2, *End Grain Factor*

The ability of a nail or spike to resist lateral forces is a function of the diameter, **D**, and depth of penetration, **p**, into the member holding the point. The reference design value tables show the maximum lateral design value based on a penetration of 10D into the main member. Penetration beyond 10D does not allow an increase in the reference design value. However, NDS allows for a reduction of design values for penetrations between 10D and 6D. The penetration used in the design must be shown on the shop drawings.

A less than the desired penetration may occur when round posts are used or when longitudinal bracing on skewed bents is not parallel to the side of a square post. In such situations, care must be taken to verify that the minimum penetration is obtained, since nails or spikes having a penetration of less than the minimum will have no allowable lateral load carrying value.

5-3.03B Required Nail Spacing

The timber industry has not adopted standards to govern the spacing of nails and spikes when used in an engineered timber connection. For dowel-type fasteners where the diameter, **D**, is less than 1/4-inch the geometry factor, $\mathbf{C_{\Delta}}$, is equal to 1.0. The guideline in NDS states that “edge distances, end distances, and fastener spacings shall be sufficient to prevent splitting of the wood.”

SC has established the following practice, which will govern the spacing of nails and spikes when used to connect falsework bracing components:

- The average center-to-center distance between adjacent nails or spikes, measured in any direction, must not be less than the required penetration into the main member for the size of nail being used.
- The minimum end distance and the minimum edge distance in both side member and main member, must not be less than 1/2 of the required penetration.

While proper installation of timber connections is primarily a field concern, the design review must assure that the members are large enough to accommodate the required number of nails or spikes when they are spaced in conformance with the criteria listed above.

5-3.03C Toe-Nailed Connections

National Design Specifications recommends that toe-nails be driven at an angle of approximately 30° to the member being toe-nailed, and started approximately 1/3 of the nail length, from the end of the member. The penetration of the nail should be a minimum of 6 times the diameter (**6d**). See Figure 5-5, *Toe-Nailed Connection*.

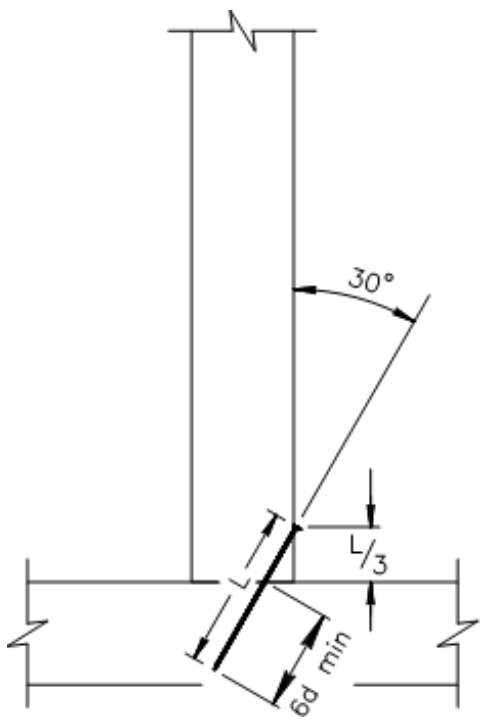

Figure 5-5. Toe-Nailed Connection.

Design values for withdrawal and lateral load resistance must be multiplied by the toe-nail factor, $\mathbf{C_{tn}}$, for toe-nailed connections as follows:

- C_{tn} = 0.67 for withdrawal loading
- C_{tn} = 0.83 for lateral loading

5-3.04 Bolted Connections

5-3.04A Design Values

The tabulated design values for bolted connections are provided in the NDS.

Threaded rods and coil rods may be used in place of bolts of the same diameter with no reduction in the tabulated values.

For connections in falsework, adjacent to or over railroads, substitution of bolts with coil rods or threaded rods is permitted if the root diameter is equal to the shank of the required bolt diameter.

If the connection is loaded at an angle to the bolt axis (e.g. a longitudinal brace on a skewed bent) see NDS section 12.3.10, *Load at an Angle to Fastener Axis*.

When the load is applied at an angle to the grain, as is the case with falsework bracing, the design value for the main member is obtained from the Hankinson formula.

$$\mathbf{N} = \frac{\mathbf{PQ}}{\mathbf{P}\sin^2\theta + \mathbf{Q}\cos^2\theta} \qquad (5\text{-}3.04A\text{-}1)$$

where: **N** = Design value for the main member (lb)

P = Tabulated design value for a load applied parallel to grain (lb)

Q = Tabulated design value for a load applied perpendicular to the grain (lb)

θ = Angle between the direction of the wood grain in the main member and the direction of the load in the side member (deg)

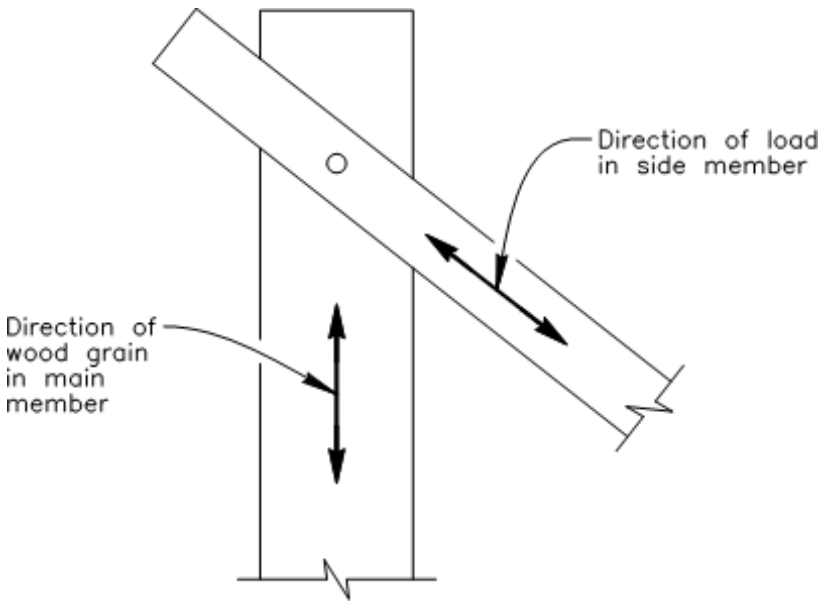

Figure 5-6. Wood Grain Direction in Post and Brace.

The reference values in NDS, are based on square posts. For round posts, the main member thickness is taken as the side of a square post having the same cross-sectional area as the round post.

$$\mathbf{d} = \sqrt{\frac{\pi \mathbf{D}^2}{4}} = \sqrt{\pi \mathbf{R}^2} \qquad (5\text{-}3.04A\text{-}1)$$

where **d** = Length of a square post having the same cross sectional area as a round post with diameter D (in)

D = Diameter of round post (in)

R = Radius of round post (in)

5-3.04B Design Procedure for Wood Cross Bracing

Special requirements apply to connections of diagonal wood bracing in compression. Referring to Section 6-3.02, *Wood Cross Bracing*:

- The contribution of the compression members and compression member connections is limited to 1/2 of their theoretical vales as calculated in the following sections.

5-3.04C Single Shear Connections

Figure 5-7, *Single Shear Bolted Connection* shows a typical two-member bolted connection in which the side member is loaded parallel-to-grain and the main member is

loaded at an angle to the grain. NDS provides reference design values for single shear connections for both wood and steel side members.

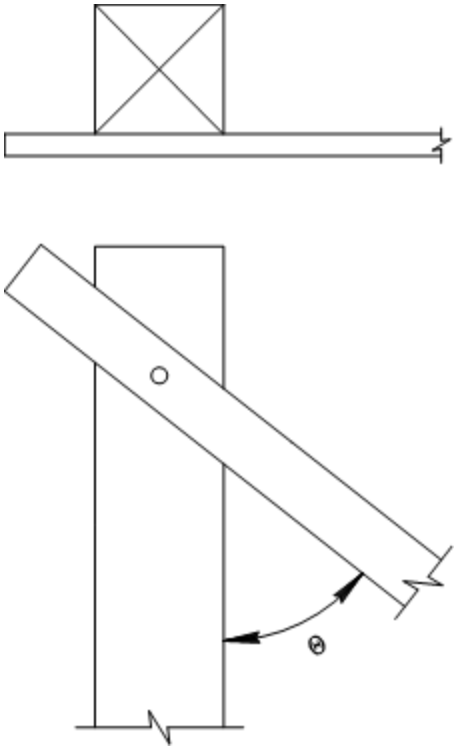

Figure 5-7. Single Shear Bolted Connection.

5-3.04D Double Shear Connections

Figure 5-8, *Double Shear Bolted Connection,* shows a three-member bolted connection in which the side members are loaded parallel-to-grain and the main member is loaded at an angle to the grain. NDS provides reference design values for double shear connections for both wood and steel side members.

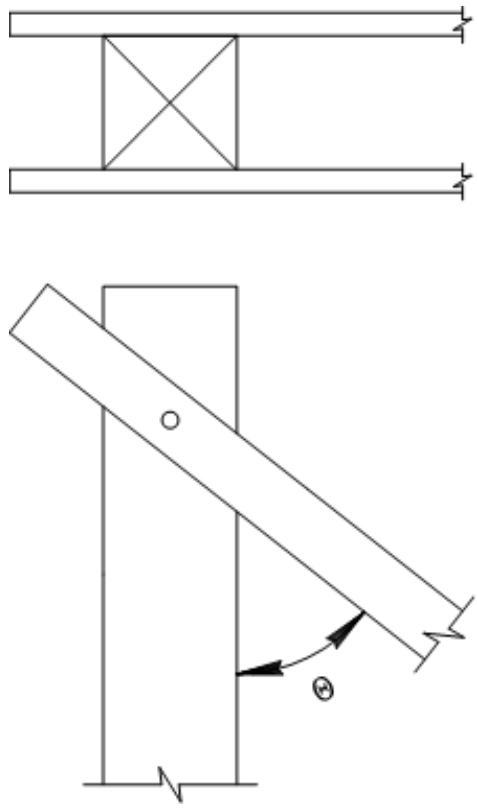

Figure 5-8. Double Shear Bolted Connection.

5-3.04E Installation Requirements

Although installation is primarily a construction concern, the design review should verify that installation of bolts meets the NDS criteria for end and edge distance found in NDS section 12.5, *Adjustment of Reference Design Values*.

For multiple bolt connections see section 5-3.06, *Multiple Fastener Connections.*

5-3.05 Lag Screw Connections

The design procedure for lag screws is similar to bolts, see section 5-3.04, *Bolted Connections*. Reference design values for lag screws for both withdrawal and lateral loading may be found in the NDS.

The reference design values apply only when the lag screw is installed in a properly sized predrilled hole.

5-3.06 Multiple Fastener Connections

Multiple fastener connections are designed in accordance with the NDS by applying the group action factor, $\mathbf{C_g}$,:

- C_g per NDS 11.3.6, *Group Action Factors*

5-3.07 Drift Pin and Drift Bolt Connections

Drift pins are steel rods cut to any desired length. Drift bolts are steel rods manufactured with a bolt head on one end. Typically, these fasteners are used to connect large members, such as caps and posts, in a timber bent. Drift pins and drift bolts are designed in accordance with NDS.

5-3.08 Adjustment for Duration of Load

Design values shown in the NDS are for normal load durations and may be increased for short duration loading.

Selecting the proper load duration factor to use in the calculations is a matter of engineering judgment. Typical load duration factors, $\mathbf{C_D}$, can be found in NDS Table 2.3.2, *Frequently Used Load Duration Factors*. For typical falsework design, a 7-day load duration factor is commonly used. For loads of shorter duration, such as wind, a larger factor would be appropriate. For stage construction where the falsework will remain loaded for an appreciable length of time, a lower factor may be appropriate.

The load duration factors, $\mathbf{C_D}$, for normal falsework construction are:

- C_D = 1.25 for vertical and horizontal loads
- C_D = 1.60 for wind load
- C_D = 2.0 for impact loading (limited to 1.6 for connection and pressure treated lumber)

If the falsework will remain loaded for a relatively longer period of time, the use of smaller duration of load factors is appropriate. These situations occur during cast-in-place prestressed construction where stressing will be delayed or during stage construction sequences for any type of concrete structure.

5-4 Steel Members

5-4.01 Design Criteria

The Standard *Specifications*, Section 48-2.02B(3)(c), *Stresses, Loading, and Deflections – Steel,* allows the use of the current *American Institute of Steel Construction (AISC) Manual* for design of steel except for flexural compressive stresses, deflections, and modulus of elasticity.

The specifications permit the use of grades of steel higher than ASTM Grade A36 for all loading conditions, provided the grade of steel can be identified. Identification is the contractor's responsibility, subject to verification by the engineer, see Section 9-2.03, *Steel Members*.

Design of unidentified steel is based on the assumed use of structural steel conforming to ASTM Grade A36.

Falsework over or adjacent to railroad must also comply with the current railroad guidelines.

5-4.02 Allowable Stresses

The maximum allowable stresses for identified steel must not exceed the requirements in the current *AISC Manual*, except for flexural compressive stresses, which must not exceed the requirements in *Standard Specifications*, Section 48-2.02B(3)(c), *Stresses, Loadings, and Deflections – Steel*.

The maximum allowable stresses for unidentified steel are based on the assumed use of structural steel conforming to ASTM Grade A36 and must not exceed the requirements in the current AISC Manual or those in the *Standard Specifications*, except for flexural compressive stresses, which must not exceed the requirements in *Standard Specifications*, Section 48-2.02B(3)(c), *Steel*.

Although the specifications allow higher working stresses when higher strength steel is used, the load carrying capacity of steel beams will, in most cases, be limited by deflection, not stress. When deflection controls, the use of high strength steel will not be of any benefit since the limiting deflection cannot be increased.

High strength steel beams may provide a greater load carrying capacity in situations where beams are subjected to bi-axial bending.

5-4.03 Bending Stresses

The bending stress formulas are:

$$\mathbf{f} = \frac{\mathbf{Mc}}{\mathbf{I}} = \frac{\mathbf{M}}{\mathbf{S}} \qquad (5\text{-}4.03\text{-}1)$$

where **f** = Bending stress (psi)

M = Bending moment (in-lb)

c = Distance from the neutral axis to the extreme fiber (in)

I = Moment of inertia of the beam about the neutral axis (in^4)

S = Beam section modulus (in^3)

If the compression flange is supported, these formulas may be used to determine the section needed to carry the applied load for a beam in which bending occurs in the vertical plane only. However, bridge falsework differs from most other construction in that top caps are typically set to the slope of the bridge soffit rather than level and the stringers are set flush on the cap. This construction configuration causes the stringers to deviate from a true vertical plane by an angle which is equal to the soffit cross slope, and the result is bi-axial bending in the stringer. Bi-axial bending is discussed in Section 5-4.04, *Bi-Axial Bending*.

If the compression flange of a beam is not supported, the maximum allowable bending stress must be reduced to prevent flange buckling, see Section 5-4.05, *Flange Buckling*.

5-4.04 Bi-Axial Bending

Figure 5-9, *Steel Beam on a Sloping Support,* shows a beam set on a sloping surface (i.e. canted). For such beams, the theoretical centroid of the applied load, **P**, acts on the top flange through the projected centerline of the web, rather than through the center of gravity of the canted beam.

When a vertical load is applied to a canted beam, the load is divided into two components: one acting through the web, and one acting along the top flange. This loading condition produces bi-axial bending (i.e. bending in two planes) which decreases the beam capacity. The decrease in beam capacity is a function of beam shape and soffit cross slope, and it cannot be determined by inspection. The effect of bi-axial bending must be investigated in all cases where falsework beams are not set in a true vertical plane.

When a beam is set on a sloping surface, the load component acting along the top flange causes the flange to deflect in the down slope direction. For nominal cross slopes, this lateral deflection is small and may be neglected. As the cross slope increases, however, the lateral deflection increases as well, and eventually becomes a factor for consideration since it can adversely affect both form alignment and reinforcing steel clearances.

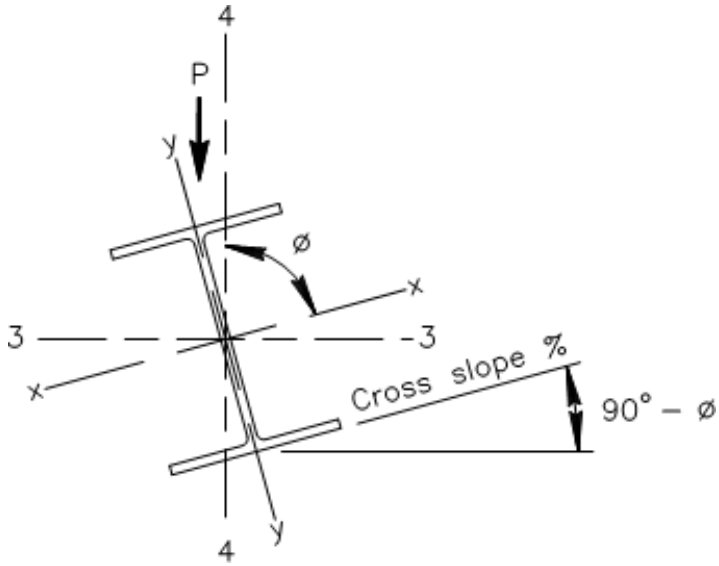

Figure 5-9. Steel Beam on a Sloping Support.

For analysis of bi-axial bending, lateral deflection must be considered in all cases where the falsework beam is canted more than 2%.

5-4.04A Beams Canted 2% or Less

Refer to Figure 5-9, *Steel Beam on a Sloping Support*. For any beam subject to bi-axial bending, the maximum bending stress, $\mathbf{f_b}$, is the sum of the bending stresses in the **x** and **y** directions. The following formulas may be used to calculate bending stress, $\mathbf{f_b}$, based on the moments of inertia of the non-rotated section and the rotation angle, **Ø**.

$$\mathbf{f_b = M\left[\frac{y}{I_{xx}}\sin\emptyset + \frac{x}{I_{yy}}\cos\emptyset\right]} \qquad (5\text{-}4.04A\text{-}1)$$

$$\mathbf{I_3 = I_{xx}\sin^2\emptyset + I_{yy}\cos^2\emptyset} \qquad (5\text{-}4.04A\text{-}2)$$

$$\mathbf{I_4 = I_{xx}\cos^2\emptyset + I_{yy}\sin^2\emptyset} \qquad (5\text{-}4.04A\text{-}3)$$

where **M** = Applied moment (in-lb)

y = Distance from the x-axis to the extreme fiber (in)

x = Distance from the y-axis to the extreme fiber (in)

Δ = Deflection angle (deg)

$\mathbf{I_{xx}}$ = Moment of inertia about x-axis of the beam (in^4)

I_{yy} = Moment of inertia about y-axis of the beam (in^4)

I_3 = Moment of inertia about the horizontal axis (in^4)

I_4 = Moment of inertia about the vertical axis (in^4)

Calculate the actual vertical deflection by using the moment of inertia about the 3-axis, I_3, in the deflection equation. As previously noted, for this case the lateral deflection may be neglected.

As an alternative procedure, stresses and deflections may be determined with respect to the strong x-axis and weak y-axis by using the **x** and **y** components of the applied load, **P**.

5-4.04B Beams Canted More Than 2%

The maximum bending stress and vertical deflection are computed in accordance with the procedure for beams canted 2% or less as discussed in the preceding section. In addition, for box girder structures, it is necessary to evaluate the effect of lateral deflection as discussed herein.

For box girder structures, the net lateral deflection of falsework beams under the weight of the bottom slab and girder stems only is limited to 1.5 inches. This limitation is considered necessary to mitigate the adverse effect of lateral movement during the soffit and girder stem concrete pour on form alignment and reinforcing steel placement and clearances.

Refer to Figure 5-10, *Lateral Deflection of a Canted Beam*, which is a schematic depiction of the movement of a point (Point A) on the top flange of a beam which is subject to bi-axial bending as it deflects under load.

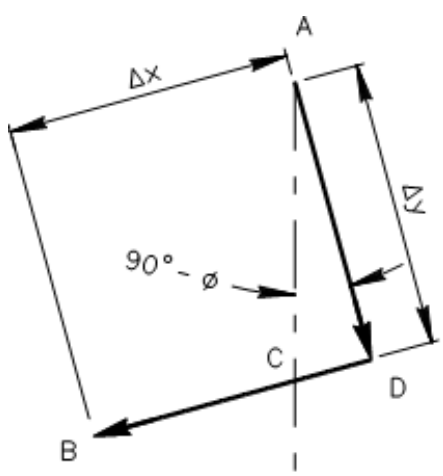

AD = Vertical deflection = Δy

DB = Lateral deflection = Δx

CB = Net lateral deflection

= DB − DC

DC = AD tan(90° − ø)

Figure 5-10. Lateral Deflection of a Canted Beam.

The movement of point **A** to point **B** is the combined vertical and lateral deflection of the bottom slab and stems of a box girder structure as the concrete is placed. While the vertical deflection can be compensated for by camber strips, the lateral deflection **DB** will displace the bottom slab and stems from the planned alignment, line **AC**, by the distance **CB**, which is the net lateral deflection. The net deflection is limited to 1.5 inches maximum.

For the lateral deflection calculation, the vertical load is the dead load weight of the concrete in the soffit slab and girder stems. Use the component values of the vertical load to determine beam deflections about both the x-axis and the y-axis.

5-4.05 Flange Buckling

The compression flange of a beam may be visualized as a column loaded along its length by increments of load transferred to it by horizontal shear from the web. If the compression flange is narrow in comparison to the depth of the beam, the flange may fail by buckling in a similar manner as a slender column.

Although methods for determining the critical buckling stress are quite complex, in steel members many simplifications are possible. Generally, the empirical formulas used are similar to column formulas, except that the flange width, **b**, is used instead of the radius of gyration.

The *Standard Specifications*, Section 48-2.02B(3)(c) *Steel* limit the allowable compression stress from flexure in the beam to:

$$\mathbf{f} = \frac{\mathbf{12{,}000{,}000}}{\mathbf{Ld/bt}} \qquad (5\text{-}4.05\text{-}1)$$

where **f** = Maximum allowable compressive stress due to flexure (psi)

L = Laterally unsupported length (in)

d = Depth of the member (in)

b = Width of compression flange (in)

t = Thickness of the compression flange (in)

The maximum allowable stress is limited to:

- 22,000 psi for unidentified steel
- 22,000 psi for steel conforming to ASTM designation A36
- 0.6 $\mathbf{F_y}$ for other identified grades of steel where $\mathbf{F_y}$ is the minimum yield stress.

If the actual stress exceeds the allowable, the flange must be supported or the load reduced.

It is difficult to determine how much lateral support may be developed by other falsework members. For example, friction between the joists and top flange of a beam will provide some restraint, but the amount is indeterminate. Therefore, friction between the joists and top flange will be neglected when investigating flange buckling.

Since it is impossible to predict the direction in which the compression flange will buckle, it is necessary to provide positive restraint in both directions. This is an important and often overlooked point. For example, the use of a tension tie between two adjacent beams or welding a light structural steel shape (such as a bar or angle) across the top flange of several beams will not prevent lateral movement. Such measures merely assure that all beams deflect in the same direction. Even when tension ties are used in combination with a compression strut, lateral restraint is not effective because the restraining components cannot assure that the beams will act as a unit when a lateral force is applied.

Timber cross bracing between adjacent beams is widely used for flange support in falsework construction. In this method timber struts, in pairs, are set diagonally between the top flange of one beam and the bottom flange of the adjacent beam to form an “X”, and securely wedged into place. However, timber cross bracing alone will not prevent flange buckling because timber struts can resist only compression forces.

Perhaps the most effective flange support method is to use steel tension ties, banded, welded, clamped, or otherwise secured across the top and bottom of adjacent beams in combination with timber cross bracing between the beams, as shown in Figure 5-11, *Two-Stringer Cross Bracing*.

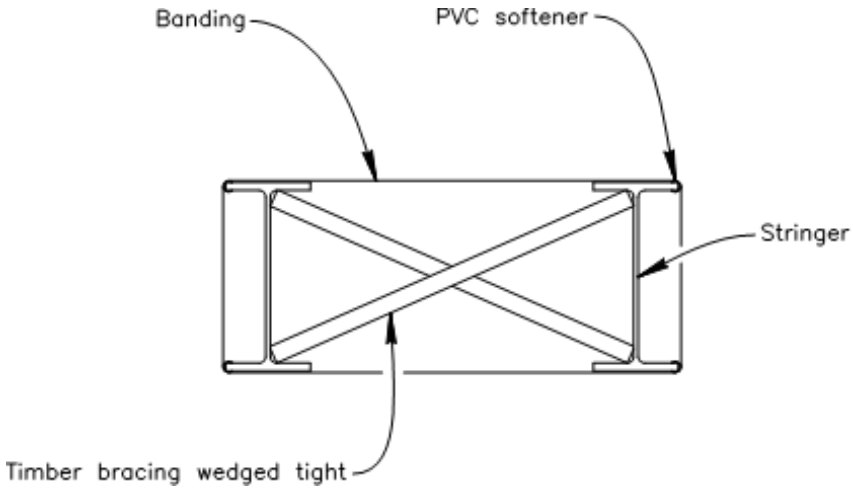

Figure 5-11. Two-Stringer Cross Bracing.

Commercial steel banding material wrapped around pairs of adjacent cross braced beams is commonly used. Steel banding is less expensive and easier to install and remove than other types of tension components. However, banding is not effective unless it is properly installed and tightened. When banding is used as part of a flange support system, some means must be provided to prevent an abrupt bend or kink at the point of contact with the outer edge of the beam flange. This is an important consideration because any kink or sharp bend in commercial banding is, potentially, a point of stress concentration, which can reduce the strength of the banding material. The use of softeners will reduce this stress concentration, see Figure 5-11, *Two-Stringer Cross Bracing*. If there is any question as to the adequacy of banding installed in a given situation, the contractor should be required to furnish the manufacturer's catalog data and instructions.

When rebar is welded to the top flange as tension ties, as a minimum, bottom tension ties must be installed in the end bays. The bottom tension ties can also be rebar welded to the bottom flanges. See Figure 5-12, *Multi-Stringer Cross Bracing*.

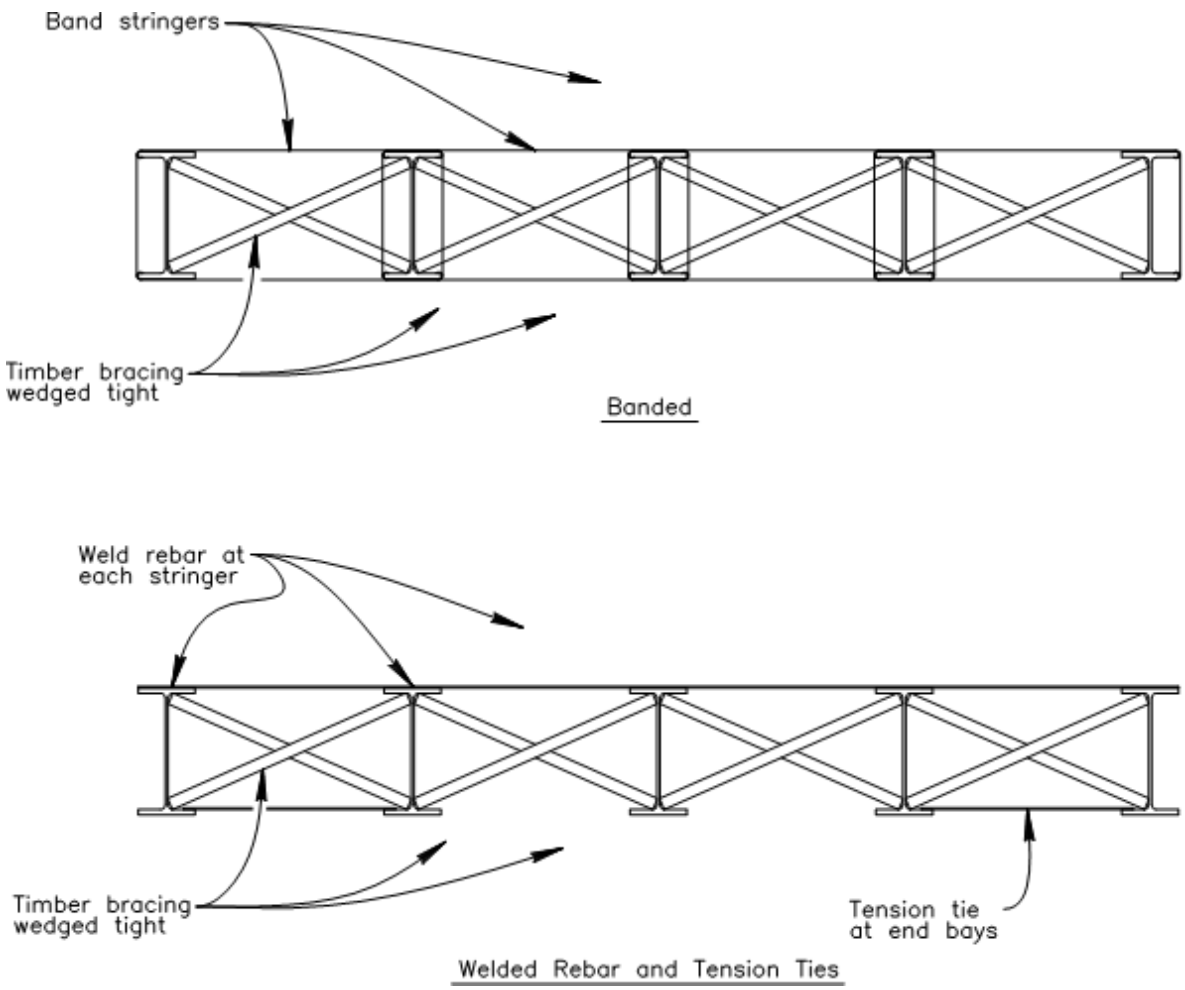

Figure 5-12. Multi-Stringer Cross Bracing.

Bracing, blocking, steel banding, ties, etc., required for lateral support of beam flanges must be installed at right angles to the beam. Bracing in adjacent bays should be set in the same transverse plane, if possible. If, because of skew or other considerations, it is necessary to offset the bracing in adjacent bays, the offset distance should not exceed twice the depth of the beam.

Only a small force is needed to hold the compression flange in position. In steel design for permanent work, it is common practice to use an assumed value of 2% of the calculated compression force in the beam flange at the point under consideration as the design force for the supporting brace. This practice is also acceptable for bridge falsework. The point under consideration should be designed for the maximum moment for the segment supported by the brace.

Providing adequate flange support is an important design consideration when support is necessary to prevent overstressing the compression flange. The method of support, including all construction details, must be shown on the shop drawings.

5-4.06 Beam Shear

The shearing stress at any point in a steel beam is calculated from the general formula for shearing stress. The general formula is:

$$\mathbf{f_v} = \frac{\mathbf{VQ}}{\mathbf{Ib}} \qquad (5\text{-}4.06\text{-}1)$$

where $\mathbf{f_v}$ = Shearing stress on any horizontal section or plane through the beam (psi)

V = Vertical shear (lb)

Q = Static moment about the neutral axis of that portion of the beam cross section, which is outside of the plane where the shearing stress is wanted (in-lb)

I = Moment of inertia of the entire beam cross section about the neutral axis (in^4)

b = Width of the beam at the point under consideration (in)

Since the web of a steel beam resists most of the shear, the shearing stress is usually calculated by:

$$\mathbf{f_v} = \frac{\mathbf{V}}{\mathbf{ht}} \qquad (5\text{-}4.06\text{-}2)$$

where $\mathbf{f_v}$ = Shearing stress through the web (psi)

V = Vertical shear (lb)

h = Overall depth of the beam including flanges (in)

t = Web thickness (in)

If a shearing stress occurs in one plane, an equal shearing stress occurs in a plane through that point perpendicular to the first plane. Therefore, the shear formula may be used to determine both vertical and horizontal shearing stresses.

5-4.07 Web Yielding

Rolled beams should be checked to verify the end reaction and any concentrated load along the interior of the beam does not produce a compressive stress at the web toe of the fillet, in excess of the allowable stress. If the actual value exceeds the allowable, the web must be stiffened or the length of bearing increased. When rolled beams require bearing stiffeners to prevent web yielding, the stiffeners may be designed to resist only the portion of the total load that is in excess of the load the beam is capable of resisting without stiffeners.

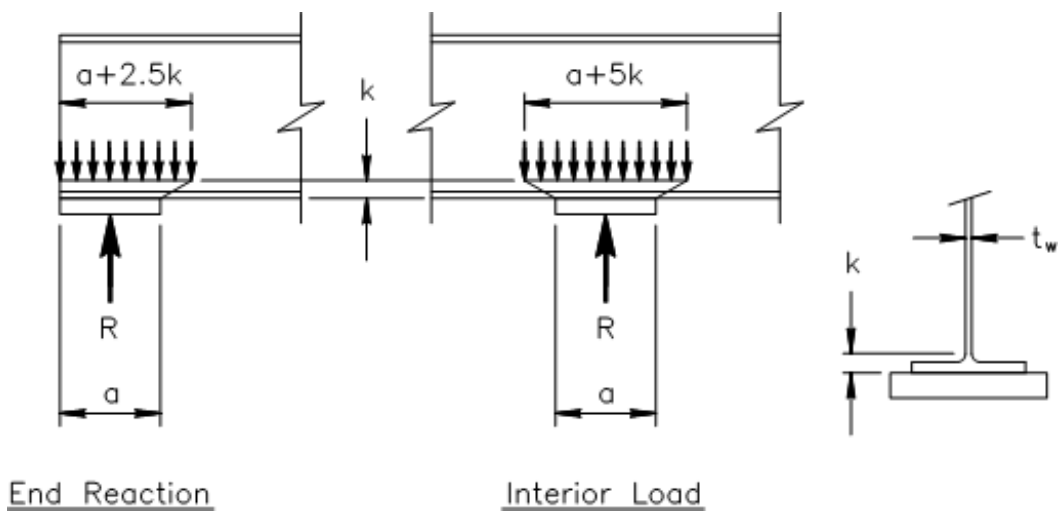

Figure 5-13. Web Yielding.

5-4.08 Web Crippling

Web crippling should be checked in beams with slender webs. Web crippling may occur at locations of concentrated loads and at supports. Figure 5-14, *Web Crippling,* illustrates the behavior of the web when it cripples.

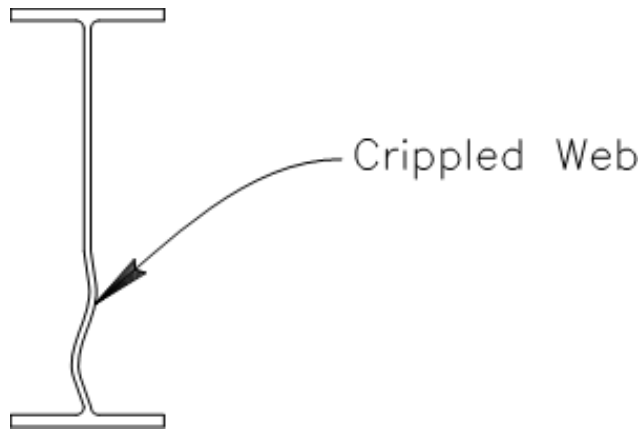

Figure 5-14. Web Crippling.

5-4.09 Flange Bending

Flange bending should be checked for steel to timber connections at locations of concentrated loads and supports. Figure 5-15, *Localized Flange Bending,* illustrates the behavior of the flange when it bends over the web. The flange capacity is determined by:

$$\frac{R_n}{\Omega} = \beta_1 t_f^2 F_{yf} \qquad (5\text{-}4.09\text{-}1)$$

where R_n = Flange capacity (lb)

β_1 = Constant based on uniform stress distribution

t_f = Flange thickness (in)

F_{yf} = Minimum specified yield strees of the flange (psi)

Ω = 1.67 (Factor of Safety)

Table 5-1. β_1 values for beams assuming uniform stress distribution.

Section	HP 12x53	HP 14x73	HP 14x89	W 14x90	HP 14x117	W 14x120
β_1	10.9	13.1	13.6	16.2	14.9	18.1

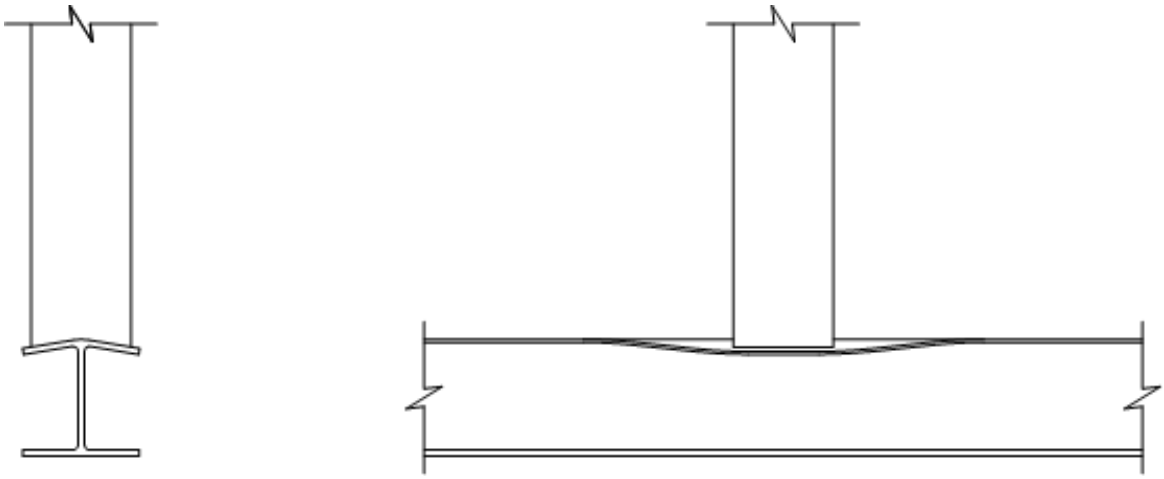

Figure 5-15. Localized Flange Bending.

5-4.10 Lateral Web Buckling

Buckling of unbraced, unstiffened beams, where the flange is loaded with a post load has potential to displace sideways through buckling of the web and is synonymous with column buckling. The dimensions of the assumed column are as follows:

- Column height equal to the clear distance between the beam flanges
- Column depth equal to the web thickness
- Column width equal to the tributary width of the associated post, which is typically the post spacing for interior post

Analyse using elastic buckling formula found in the *AISC Steel Construction Manual* with a effective length factor equal to 1.7.

5-4.11 Timber Blocking

Timber blocking can be used to increase capacity for web yielding, web crippling, and flange bending. Timber blocking must not be used for web lateral buckling. The full capacity of the blocking is not effective for increasing web. The effective capacity is given in the following formula:

$$\mathbf{P_b = \gamma F_{c||}' A_b} \qquad (5\text{-}4.11\text{-}1)$$

γ = 0.5 for wood post

γ = 0.3 for steel post

where $\mathbf{P_b}$ = Capacity of timber blocking (lb)

γ = Blocking effectiveness factor

$\mathbf{F_{c\|}'}$ = Nominal allowable stress for block after adjustment factors are applied (psi)

$\mathbf{A_b}$ = Combined cross sectional area of blocking on both sides (in^2)

Location of blocking is limited to the locations shown in Figure 5-16, *Timber Blocking*.

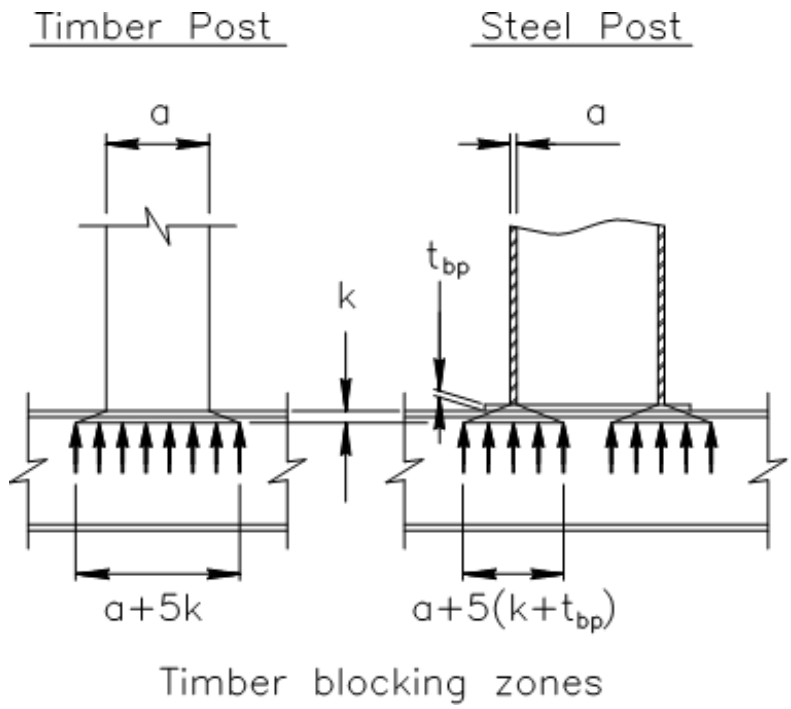

Figure 5-16. Timber Blocking

5-4.12 Steel Posts

In a post with pinned ends and no intermediate support, the unsupported length, **L**, is the actual length. Posts with other end conditions require the use of an effective length instead of the actual length. The effective length is the length of post, which actually behaves as though it were pinned.

Determining the effective length of a post with restrained end conditions is an unnecessary refinement for falsework design. It is accepted practice to treat posts in falsework bents as though their ends are pin-connected, which is conservative for typical falsework posts with some end restraint.

5-4.13 Steel Bracing

For bolted steel connections, the bolt design values may be taken from the AISC *Steel Construction Manual*. In accordance with AISC design practice, the calculated bearing

stress on the projected area of the bolt in steel members may not exceed 1.35 times the specified yield strength, $\mathbf{F_y}$, of the steel. For A36 Grade material, the allowable bearing stress is 48,600 psi. This value may not be increased for falsework construction.

Structural steel components (angles, bars, etc.) are sometimes used as diagonal bracing in timber bents. In such cases, as discussed in Section 5-3.04A, *Design Values,* the bolt design values for parallel-to-the-grain loading in the main member may be increased, but no increase is allowed for perpendicular-to-the-grain loading.

5-4.14 Welding Steel Members

Refer to *Standard Specifications*, Section 48-2.01D(2), *Welding and Nondestructive Testing,* for welding requirements. Refer to Section 9-2.03B, *Welding Steel Members,* for inspection requirements. *Standard Specifications*, Section 11, *Welding,* does not apply to welding of falsework members.

5-4.14A All Welds

All welding must comply with AWS D1.1 welding standard. All welds must be performed by a certified welder and inspected by an independent qualified inspector as stated in AWS D1.1.

The design strength must be determined in accordance with the AISC design practice. Per the *Standard Specifications*, Section 48-2.01C(2), *Shop Drawings*, the welding standard must be shown on the shop drawings.

5-4.14B Welded Splices

Special requirements apply to welded splices. The contractor is required to follow the requirements in the *Standard Specifications*, Section 48-2.01D(2), *Welding and Nondestructive Testing,* when splicing steel members by welding. See Section 9-2.03, *Steel Members,* for additional details and inspection requirements.

5-4.14C Approximating Fillet Welds

The design strength of fillet welded connections may be approximated by assuming a value of 1000 lb per inch length for each 1/8-inch of the fillet weld size (e.g. 1-inch length of a 1/4-inch weld has a strength of 2000 lb). This value is considered conservative for work performed by a certified welder and therefore is only intended as a rough approximation. If the capacity is not adequate using this approximation, the method in the AISC Steel Construction Manual should be used to determine the capacity of fillet welds.

5-4.14D Grades Higher Than A36

If the falsework design is based on the higher working stresses allowed for grades of steel other than Grade A36, the contractor must furnish substantiating mill test reports and a Certificate of Compliance. The Certificate of Compliance must be signed by the contractor with a list and description of the beams covered by the mill test reports.

5-4.15 Miscellaneous Steel Components

The adequacy of miscellaneous components (such as anchor bolts, post base plates, grillages, hangers, tie bars, and similar steel components) and hardware items, when used at locations subject to analysis but not specifically covered by the *Falsework Manual*, will be determined in accordance with applicable design procedure or recommended practice included in the AISC Steel Construction Manual.

5-5 Cable Bracing Systems

5-5.01 Introduction

The term cable bracing system means a length of wire rope cable and an appropriate fastening device. Cable bracing systems may be used to resist both overturning and collapsing forces, See Chapter 6, *Stability,* for a discussion of overturning and collapse as falsework failure modes.

Cable systems are particularly effective in resisting the overturning of high falsework. They are also commonly used as diagonal bracing to resist collapse of falsework bents. Moreover, cable is also used extensively as temporary bracing to stabilize falsework bents while they are being erected and/or removed. Cable systems are relatively inexpensive compared to other bracing methods.

Cables and cable fastening devices are an essential part of the falsework design. Design of cable systems is a sophisticated exercise, particularly with respect to such factors as the anticipated cable elongation, the amount of preloading or cable tension needed, the effect of cable tension on other members, and similar factors, which affect system stability.

SC practice with respect to the use of cable bracing systems, and the procedures and methodology to be used by field engineers when reviewing the adequacy of cable designs, are discussed in the following sections.

The guidance provided herein can be used when prestressed (PT) strands are used for bracing. However, it is worth noting that PT strands have a modulus of elasticity, **E** value, in the range of 28,000 - 29,000 ksi as compared to cables that have an **E** value of about 13,500 ksi. In addition, the PT strand has yield values as 90% of minimum

breaking force as compared to falsework cables that has yield strength as 65% of the minimum breaking force.

As used in this section, the term *cable* includes prestressing strand when prestressing strand is used in a falsework bracing system.

5-5.02 Required Information

All elements of the cable bracing system must be shown on the shop drawings in sufficient detail to permit a stress analysis. In addition, the contractor must provide technical data showing the strength and physical properties of the cable to be used, see Section 5-5.03, *Manufacturer's Technical Data*.

The following information is to be shown on the shop drawings for all cable systems:

- Cable diameter
- Cable description (including cable nominal diameter, number of strands, number of wires per strand, and core type)
- Weight of the cable
- Minimum breaking force
- Net metallic area
- Modulus of elasticity
- Maximum construction stretch (percent of loaded length)
- Preload value, along with the method by which the preload force is to be measured
- The type and number of fastening devices (such as Crosby clips, plate clamps, turnbuckles, shackles, etc.) to be used at each connection.
- If tightening is necessary, the method by which the cables may be tightened after installation to ensure their continued effectiveness
- Cable anchorage
- The location and method of attachment of the cable to the falsework

The location and method of attachment of the cable to the falsework are of particular importance to the design, since the connecting device must transfer both horizontal and vertical forces to the cable without overstressing any falsework component. When cables are used to prevent overturning of heavy duty shoring, cable restraint must be designed to act through the cap system. Cables should not be attached to tower components unless the contractor has obtained written authorization from the shoring

system manufacturer. Such authorization must be furnished before the shop drawings are authorized. (See Chapter 7, *Manufactured Assemblies.*)

5-5.03 Manufacturer's Technical Data

For the application of the *Standard Specifications*, Section 48-2.02B(3)(d), *Manufactured Assemblies*, a cable bracing system (i.e., the cable together with cable fastening devices) is a manufactured assembly. Therefore, the cable must be installed in accordance with the manufacturer's recommendations, and the contractor must furnish manufacturer's technical data if requested by the engineer.

For all cable systems, technical data from the manufacturer must include:

- Cable diameter
- Cable description (including cable nominal diameter, number of strands, number of wires per strand, and core type)
- Weight of the cable
- Minimum breaking force (which may be identified as a rated or nominal strength) or the safe working load of the cable
- Net metallic area
- Modulus of elasticity
- Maximum construction stretch (percent of loaded length)
- Preload value
- The type and number of fastening devices (such as Crosby clips, plate clamps, turnbuckles, shackles, etc.) to be used at each connection.

Since the adequacy of a cable bracing design cannot be verified without reference to the technical data provided by the cable manufacturer, such data is an essential part of the shop drawing submittal. If the shop drawings include a cable bracing system and are not accompanied by technical data from the cable manufacturer, the contractor should be informed immediately. The shop drawing submittal is not complete until the technical data is provided, see Chapter 2, *Review of Shop Drawings*.

In the absence of technical data, a load test will be required to establish cable strength and physical properties, see Section 5-5.10, *Cable Load Tests*.

5-5.04 Cable Connector Design

Cable connectors must be designed in accordance with criteria shown in Table 5-2, *Wire Rope Connections,* and Table 5-3, *Number and Spacing of U-Bolt Wire Rope*

Clips. Connector efficiency (CE) assumed in the design must not exceed the values shown in Table 5-2, *Wire Rope Connections*.

Connector efficiency factor for PT strands does not apply when used with chuck/wedges/retainer cap.

The installation of cable connectors must conform to the manufacturer's requirements. Only forged clips must be used as connectors. Forged clips are marked *forged* to permit positive identification, and have the appearance of galvanized metal. Malleable clips shall not be used as connectors. Malleable cable clips appear smooth and shiny.

If U-bolt (Crosby type) wire rope clips are used as connectors, the number used and the spacing must conform to the data shown in Table 5-3, *Number and Spacing of U-Bolt Wire Rope Clips*, and must be shown on the shop drawings.

Figure 5-17. Applying Wire Rope Clips.

The only correct method of attaching U-bolt wire rope clips to rope ends is shown in Figure 5-17, *Applying Wire Rope Clips*. The base (saddle) of the clip bears against the live end of the rope, while the "U" of the bolt presses against the dead end. A useful method of remembering this is: "You never saddle a dead horse."

The clips are usually spaced about six rope diameters apart to give adequate holding power. A wire rope thimble should be used in the loop eye to prevent kinking when wire rope clips are used. The correct number of clips for safe application, and spacing distances are shown in Table 5-3, *Number and Spacing of U-Bolt Wire Rope Clips*.

Table 5-2. Wire Rope Connections.

Wire Rope Connections (As compared to Safe Load on Wire Rope)		
Figure	**Type of Connection**	**Efficiency**
	Wire Rope	100 %
2	Sockets – Zinc Type	100 %
3	Wedge Sockets	70 %
4	Clips – Crosby Type	80 %
5	Knot and Clip (Contractor's Knot)	50 %
6	Plate Clamp – Three Bolt Type	80 %
7	Spliced Eye and Thimble	
	1/4" and smaller	100 %
	3/8" to 3/4"	96 %
	7/8" to 1"	88 %
	1-1/8" to 1-1/2"	82 %
	1-5/8" to 2"	75 %
	2-1/8" and larger	70 %

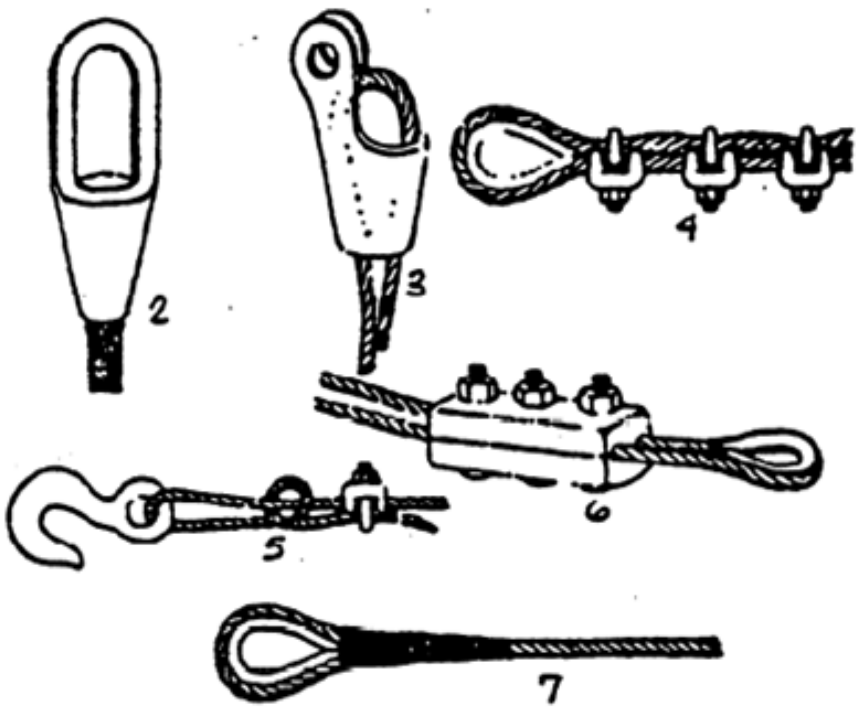

Table 5-3. Number and Spacing of U-Bolt Wire Rope Clips.

U-Bolt Wire Rope Clips		
Improved Plow Steel, Wire Rope Diameter	Number of Clips (Drop Forged)	Minimum Spacing
(in)		(in)
1/2	3	3
5/8	3	3-3/4
3/4	4	4-1/2
7/8	4	5-1/4
1	5	6
1-1/8	6	6-3/4
1-1/4	6	7-1/2
1-3/8	7	8-1/4
1-1/2	7	9

5-5.05 Cable Elongation

Wire rope cable is an elastic material, which will elongate or stretch when loaded. However, cable is a unique elastic material in that its elongation is not uniform throughout the elastic range. Additionally, it is subject to inelastic deformation at loads well below the yield strength.

For descriptive purposes, the cable industry identifies the two properties that contribute to the total elongation experienced by a cable during its service life as elastic stretch and construction stretch.

To ensure falsework stability, cable elongation must be considered when cable is used as bracing to prevent overturning or collapse of the falsework.

5-5.06 Factor of Safety

The allowable (or design) load carrying capacity of a product or device is obtained by applying a factor of safety based on the ultimate strength of that product or device. In general, this approach is satisfactory, because the system integrity will not be jeopardized by inelastic deformation that may occur if a product or device is subjected to a load that exceeds its yield strength, provided the load is not greater than the ultimate strength. However, this practice is not appropriate for cables used as falsework bracing because of the need to limit the total cable elongation to a predictable amount. In view of this reality, when cable is used as falsework bracing, the allowable working load must be related to the yield strength of the cable.

While a factor of safety of two, based on yield strength, may be considered satisfactory for falsework, the industry standards established by the Wire Rope Technical Board require the safe working load for static loading conditions to be determined using a factor of safety of three, based on the minimum breaking force of the cable. Since cables of this type used for falsework have yield strength of approximately 65% of the nominal strength, the industry standard is consistent with the use of a factor of safety of two based on yield strength.

Therefore, a factor of safety, **FS = 3**, based on the minimum breaking force, **MBF**, is required when determining the allowable design capacity of the cable units.

5-5.07 Limitations and Conditions of Use

The use of cable bracing systems designed to resist collapse is limited to single tier falsework bents where the cable is fastened to the bent cap. The use of cable to provide frame rigidity in multi-tiered bents, or in any bent where the cable is attached to a post or column will not be permitted, see Chapter *6, Stability*, for definitions of single and multi-tiered bents.

For single tier falsework with cable bracing systems, the horizontal deflection is limited to:

$$\Delta = \frac{\mathbf{L}}{\mathbf{8}} \leq \frac{\mathbf{b}}{\mathbf{4}} \qquad (5\text{-}5.07\text{-}1)$$

where Δ = Horizontal deflection (in)

L = Post height (ft)

b = Post width or diameter (in)

Limiting the horizontal deflection is necessary to prevent undesirable frame distortion, and to ensure that the vertical load reaction remains within the base width of the post.

The calculated horizontal deflection must be based on cable elongation due to both elastic and construction stretch, as discussed later in this section.

Cables attached to timber members, must be attached with an appropriate fastening device installed in accordance with the manufacturer's recommendations. Looping cable bracing around timber members is not permitted, because of the need to accurately predict the amount of lateral deflection in the system. However, for temporary erection or removal of bracing it is acceptable to loop cable bracing around timber members.

5-5.08 Cable Design Load for Overturning

When cables are used as bracing to resist overturning, the horizontal design load to be resisted by the cable bracing system will be calculated as follows:

- For heavy duty shoring, cable bracing must be designed to resist the difference between the total overturning moment and the resistance to overturning provided by the individual towers, see Chapter 4, *Design Considerations,* and Chapter 6, *Stability,* for overturning considerations.
- For pipe-frame shoring, cable bracing must be designed to resist the difference between the total overturning moment and the resistance to overturning provided by the shoring system as a whole, see Chapter 7, *Manufactured Assemblies,* for analysis of pipe frame shoring systems.
- For all other types of falsework, including temporary bracing used to stabilize falsework components during erection and/or removal, cable bracing must be designed to resist the total overturning moment.

5-5.09 Review Criteria for Cable Bracing Systems

The procedure for analyzing cable bracing systems, assumes that the post is attached to the top cap and bottom cap by an eccentric pinned connection, and that the eccentricity is numerically equal to the horizontal movement of the top cap due to cable unit elongation. These assumptions are valid for typical pipe post bents where the connections are not designed to resist moment, and for all timber bents. However, it is theoretically possible to design a pipe post frame with fixed connections. Any such designs will require a rigorous analysis by the contractor, with supporting calculations, and similar review by the engineer. In such cases, the engineer should contact the Falsework Engineer in SC HQ for the procedure to be followed.

The procedure considers the effect of cable elongation and frame deflection. Cable elongation allows the frame to deflect, producing vertical load eccentricity, which must be considered in the analysis. Additionally, post reactions will be affected by the vertical component of the cable load.

5-5.09A Allowable Working Loads

The maximum allowable load to be carried by a given cable will be determined in accordance with the following criteria:

5-5.09A(1) New Cable

If the cable is new or in uniformly good condition, and can be identified by reference to a manufacturer's catalog or similar technical publication, the allowable cable load will be the minimum breaking force, **MBF**, of the cable as

shown in the manufacturer's catalog, multiplied by the efficiency of the cable connector, and divided by the factor of safety. The allowable load capacity is:

$$\mathbf{P} = \frac{(\mathbf{MBF})(\mathbf{CE})}{\mathbf{FS}} \qquad (5\text{-}5.09A(1)\text{-}1)$$

where **P** = Allowable cable load capacity (lb)

MBF = Minimum breaking force (lb)

CE = Connector efficiency, see Table 5-2, *Wire Rope Connections*

FS = Factor of safety

While the technical data provided by the manufacturer will, in most cases, show the minimum breaking force, of the cable; some manufacturer's catalogs show only a recommended safe working load. If this is the case, the cable design load may not exceed the safe working load value, unless the contractor elects to perform a load test.

For a given cable, the safe working load recommended by the manufacturer is considerably less than the allowable load determined from the minimum breaking force of the cable. This is the case because the recommended safe working load is based on a factor of safety of 5 or more in consideration of the dynamic loading to which cable is ordinarily subjected. However, the appropriate static loading condition associated with falsework construction is the factor of safety of 3.

5-5.09A(2) Used Cable

Used cables must be in serviceable condition. A cable in serviceable condition will pass the inspection of a competent person and will comply with all the requirements for rope inspection in the current edition of the *Wire Rope User's Manual*, published by the Wire Rope Technical Board. For inspection, see Section 9-3.12D(2), *Cable Inspection*.

If the cable is used and still in serviceable condition, but a manufacturer's catalog is not available, the contractor may elect to perform a load test. In such case, the allowable working load must not exceed the minimum breaking force, **MBF**, as determined by the load test, multiplied by the connector efficiency factor, and divided by the factor of safety. The allowable load capacity is:

$$\mathbf{P} = \frac{(\mathbf{MBF})(\mathbf{CE})}{\mathbf{FS}} \qquad (5\text{-}5.09A(2)\text{-}1)$$

where **P** = Allowable cable load capacity (lb)

M**BF** = Minimum breaking force (lb)

CE = Connector efficiency, see Table 5-2, *Wire Rope Connections*

FS = Factor of safety

If the cable is used and still in serviceable condition, and if the contractor does not perform a load test, the allowable working load must not exceed the wire rope capacity shown in Table 5-4, *Wire Rope Capacities,* multiplied by the cable connector efficiency. The allowable load capacity is:

$$\mathbf{P} = (\mathbf{SL})(\mathbf{CE}) \qquad (5\text{-}5.09A(2)\text{-}2)$$

where **P** = Allowable cable load capacity (lb)

SL = Safe load from Table 5-4, *Wire Rope Capacities* (lb)

CE = Connector efficiency, see Table 5-2, *Wire Rope Connections*

Table 5-4. Wire Rope Capacities.

Wire Rope Capacities		
Safe load for new improved plow steel hoisting rope		
6 strands of 19 wires. Hemp Center		
FS = 6		
Diameter	**Weight**	**Safe Load**
(in)	(plf)	(lb)
1/4	.10	1.050
5/16	.16	1.500
3/8	.23	2.250
7/16	.31	3.070
1/2	.40	4.030
9/16	.61	4.840
5/8	.63	6.330
1	1.60	15.000
1-1/8	2.03	18.600
1-1/4	2.50	23.000
1-3/8	3.03	26.900
1-1/2	3.60	30.700
1-5/8	4.23	36.700
1-3/4	4.90	41.300

5-5.09B Cable Preload

In this section, the term *cable unit* refers to all cables acting to resist forces in the same direction, and the term *cable* refers to each individual cable within the cable unit.

After assembly, all cable units must be preloaded to remove any slack in the cables and connections. Preloading is necessary to ensure that the cable units will act elastically when the loads are applied.

A number of subjective considerations are involved when determining whether a given preload force is sufficient to ensure that the cable bracing system will act elastically. In the past, an arbitrary value of 1000 lb has been commonly used as a minimum preload force; however, the actual force needed to remove cable slack is a function of both the length and weight of the cable, thus there is no single preload value that will be appropriate for all installations.

To verify design adequacy, use the relationship between preload force and the theoretical drape of the cable hanging under its own weight. For any given preload value, the drape may be calculated using the formula in Figure 5-18, *Cable Drape Formula*. Dimension **A** is the mid-span cable drape.

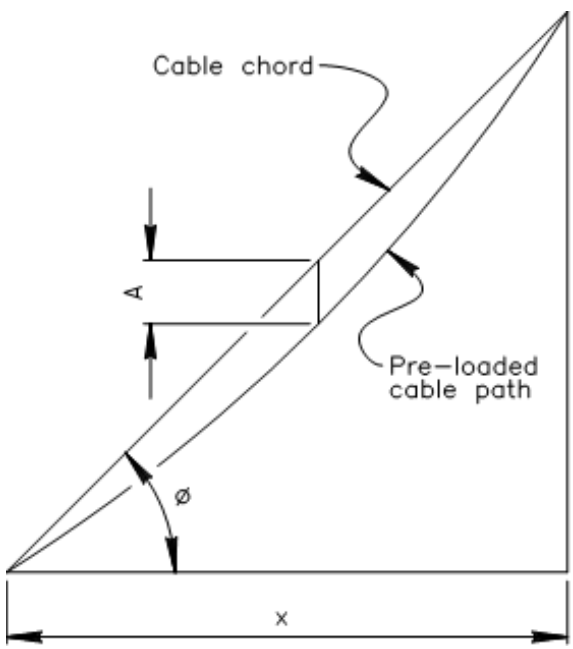

$$A = \frac{wx^2}{8T\cos ø}$$

Where A = Deflection (ft)
w = Cable weight per foot (lb/ft)
x = Horizontal distance between cable connection points (ft)
T = Cable pre-load value (lb)

Figure 5-18. Cable Drape Formula.

The preload force shown on the shop drawings must tension the cable unit sufficiently so that the calculated cable drape, after the falsework is erected, will not exceed the values in Table 5-5, *Maximum Cable Drape*.

Table 5-5, Maximum Cable Drape.

Cable Diameter	Max Cable Drape "A"
(in)	(in)
3/8	1
1/2	2
5/8	2-3/4

Experience has demonstrated that a preload force of less than about 500 lb may be insufficient to remove all cable slack. Therefore, the minimum preload value must not be less than 500 lb, regardless of other considerations.

For bents where the top cap and bottom cap do not have the same slope, the variation in post height will produce a non-symmetrical cable arrangement wherein the opposing cable units will have different lengths, and thus different elongations under a given preload force. However, the horizontal component of the cable elongation at the top cap connection must be equal in both directions to prevent distortion of the falsework bent. This means that, except for symmetrical cable arrangements, opposing cable units will have slightly different preload values.

Preload values are to be calculated by the contractor and shown on the shop drawings, along with the method by which the required preload force is to be measured.

5-5.09C Cable Elongation

The assumptions and design practice discussed herein are based on recommendations and design standards in the *Wire Rope User's Manual,* Fourth Edition, 2005, published by the Wire Rope Technical Board. Industry recommendations and standards are modified as appropriate for falsework considerations.

For a given installation and design load, the total cable elongation is a function of two independent factors:

- Elastic stretch, which is the result of the inherent elasticity, or recoverable deformation, of the metal itself. Since the elastic properties of a given cable can be determined, elongation due to elastic stretch is predictable.
- Construction stretch, which occurs when cable is loaded for the first time. When a cable is first loaded, the helically wound wire and strands are pulled more tightly together, compressing the core and bringing all of the cable elements into closer contact. This results in a slight reduction in diameter and a corresponding increase in length. Construction stretch is influenced by several factors including:
    - Type of core
    - Number of strands

- Number of wires in each strand
- The manner in which the cable is wound
- The magnitude of the applied load

Because of the number of variable factors involved, there is no mathematical constant applicable to all cable types from which elongation due to construction stretch may be determined. For a given cable and load, however, the probable construction stretch can be approximated with sufficient accuracy for cable design considerations.

5-5.09C(1) Elastic Stretch

For an elastic material loaded within the elastic range, the elastic deformation (i.e., the change in length, or stretch) is directly proportional to the change in applied load, all other factors remaining equal.

The general formula for elastic deformation is:

$$\Delta = \frac{(\mathbf{Change\ in\ Load})(\mathbf{Length})}{(\mathbf{Area})(\mathbf{Modulus\ of\ Elasticity})} \qquad \text{(5-5.09C(1)-1)}$$

Unlike other elastic materials, cable elongation is not directly proportional to the applied load over the full elastic range. This is the case because the modulus of elasticity for a given cable is significantly lower at low levels of applied load than at loads nearer to the normal working strength of the cable.

To accommodate this unique physical characteristic, it is standard practice in the cable industry to facilitate cable elongation calculations by using a nominal **E** value and a reduced **E** value, depending on the magnitude of the applied load. The nominal **E** value is used for that portion of the total load, which exceeds 20% of the minimum breaking force of the cable. The reduced **E** value, which is equal to 90% of the nominal value, is used for the portion of the load between zero and 20% of the minimum breaking force.

If the cable design load is not greater than 20% of the cable minimum breaking force , the elastic stretch may be determined from the general formula for elastic deformation shown above, using the reduced **E** value:

$$\Delta = \frac{(\mathbf{P-Preload})(\mathbf{L})}{\mathbf{A}(\mathbf{0.9E})} \qquad \text{(5-5.09C(1)-2)}$$

where Δ = elastic deformation (ft)

P = Cable load (lb)

L = Loaded length of the cable (ft)

A = Net metallic area of the cable (in^2)

E = Nominal modulus of elasticity (psi)

If the cable design load is greater than 20% of the minimum breaking force, the total elastic stretch is the sum of Δ_1 and Δ_2 as given by the following formulas:

$$\Delta_1 = \frac{(0.2\mathrm{MBF} - \mathrm{Preload})(\mathrm{L})}{\mathrm{A}(0.9\mathrm{E})} \qquad \text{(5-5.09C(1)-3)}$$

$$\Delta_2 = \frac{(\mathrm{P} - 0.2\mathrm{MBF})(\mathrm{L} + \Delta_1)}{\mathrm{AE}} \qquad \text{(5-5.09C(1)-4)}$$

$$\Delta_T = \Delta_1 + \Delta_2 \qquad \text{(5-5.09C(1)-5)}$$

where Δ_1 = Elastic deformation below 20% of minimum breaking force (ft)

Δ_2 = Elastic deformation above 20% of minimum breaking force (ft)

Δ_T = Total elastic deformation (ft)

MBF = Minimum breaking force (lb)

L = Loaded length of the cable (ft)

P = Cable load (lb)

A = Net metallic area of the cable (in^2)

E = Nominal modulus of elasticity (psi)

5-5.09C(2) Construction Stretch

As previously noted, construction stretch occurs when a cable is loaded for the first time. Construction stretch is an important design consideration for cable bracing systems because, depending on cable type, a typical new wire rope cable initially loaded to its design working strength will undergo a permanent elongation of from 1/2 to 1% of the loaded length.

Industry design practice assumes that construction stretch is proportional to the applied load, and that all construction stretch occurs within the elastic range. That is, the total expected construction stretch will have occurred when the applied load reaches the yield point load, or 65% of the cable minimum breaking force.

Construction stretch is given by:

$$\Delta_{CS} = \left(\frac{P}{0.65MBF}\right)(CS)(L) \qquad (5\text{-}5.09C(2)\text{-}1)$$

where Δ_{CS} **=** Construction stretch (ft)

P = Applied load (lb)

CS = Anticipated construction stretch provided by manufacturer

L = Cable length between end connections (ft)

MBF = Minimum breaking force (lb)

Construction stretch is expressed as a percent of the loaded length of the cable. For falsework bents, the loaded length is the length between end connections. The anticipated construction stretch, will be included in the cable design data provided by the manufacturer. If for some reason it is not provided and cannot be obtained, the analysis may be based on assumed values of 3/4 and 1% for wire core and fiber core cables, respectively.

Some types of high strength cable, such as prestressing strand, are commercially available with construction stretch removed by preloading at the factory. Such cable will conform to the requirements for ASTM Designation A586 (structural strand) or ASTM Designation A603 (structural rope), and will be clearly identified as prestretched cable. When prestretched cable is used, it is not necessary to consider construction stretch in the analysis.

Cables conforming to ASTM Designation A586 or A603 may be either prestretched or non-prestretched. Prestretched cable must be so identified in the cable design data furnished by the manufacturer. If the cable is not clearly identified as prestretched, construction stretch must be considered in the analysis, even though the cable may otherwise conform to the referenced ASTM specifications.

5-5.09D Horizontal Displacement of Top Cap

When calculating the horizontal displacement of the top cap due to cable unit elongation, all posts are assumed to rotate about their bases, and their tops move laterally the same distance as the cap. The calculated horizontal displacement must be less than the allowable horizontal displacement. See Section 5-5.07, *Limitations and Conditions of Use*.

Calculate horizontal displacement:

- Refer to Figure 5-19, *Post Displacement due to Cable Elongation*.
- The vertical distance between the lower cap and upper cap cable connection points at the location of the cap cable connection, vertical line **a**, may be used to complete triangles for the preloaded **b** and fully loaded **b'** cables. The law of cosines may be used to determine angles, since the dimensions of all three legs of the triangles will be known. Once the angle of rotation, **Ø**, of the posts has been determined, the horizontal displacement at the tops of the posts can be calculated. The angle **α** is the slope of the cap.

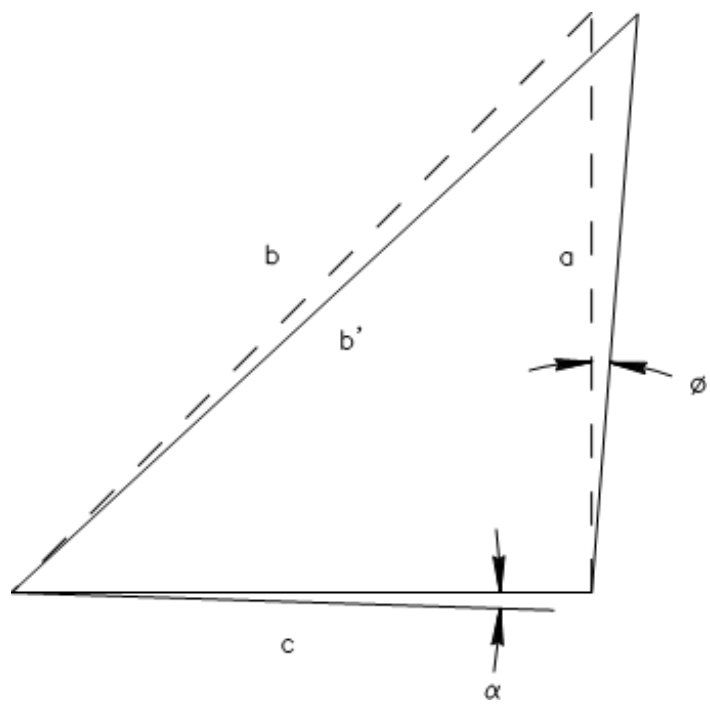

Figure 5-19. Post Displacement due to Cable Elongation.

5-5.09E Step By Step Procedure for Analysis

The following procedure is used to evaluate the system. This procedure is illustrated in Appendix D *Example Problems*, Example 18, *Cable Bracing – Bents*:

- Determine cable lengths, post heights, and the vertical distance between the plane of the cable connection at the lower cap and the plane of the cable connection at the upper cap.
- Calculate the horizontal design load based on the assumed horizontal load, see Section 3-3, *Horizontal Load*, and *Standard Specifications*, Section 48-2.02B(2), *Design Criteria – Loads*. The assumed horizontal load is applied to the unloaded and the loaded conditions.

- Calculate the capacity of the cable units, using the factor of safety based on the minimum breaking force, see Section 5-5.06, *Factor of Safety*.
- Check the cable preload values shown on the shop drawings.
- Using the horizontal design load, calculate the cable unit design load.
- Compare the cable unit design load and the cable unit capacity. If the design load exceeds capacity, the system must be redesigned.
- Calculate the cable unit elongation, which is the sum of the elongations due to elastic and construction stretch. As previously noted, a consideration of both elastic and construction stretch is required when calculating the expected cable elongation, unless the cable to be used has been preloaded at the factory to remove the construction stretch.
    - Calculate the elastic stretch
    - Calculate the construction stretch
    - Add the elastic stretch and construction stretch to obtain the total elongation for the cable unit
- Calculate the horizontal displacement of the top cap due to cable unit elongation
- Compare the calculated horizontal displacement and the allowable horizontal displacement

5-5.09E(1) Final Steps for Box Girder Bridges

The *Standard Specifications*, Section 48-2.02B(2), *Design Criteria – Loads,* provide for two loading conditions for box girder structures with cable bracing:

- Live load, stem and soffit dead load, falsework dead load, assumed horizontal load, and the vertical component of the cable unit load. All vertical loads act on the falsework in its deflected position.
- Live load, total dead load of entire superstructure cross section, falsework dead load, and the assumed horizontal load. All vertical loads act on the falsework in its deflected position.

The procedure for box girders structures is as follows:

- Calculate the post loads and the bending moment in the lower cap and upper cap for both loading conditions. Except for symmetrical cable configurations, it will be necessary to determine vertical load eccentricity and post reactions in both transverse directions to find the maximum loads and stresses in the individual posts.
- Investigate posts for both loading conditions:

- Determine the allowable axial compressive stress, $\mathbf{F_a}$, for each post.
- Calculate the axial compressive stress at each post:

$$\mathbf{f_a} = \frac{\mathbf{P}}{\mathbf{A}} \qquad \text{(5-5.09E(1)-1)}$$

where $\mathbf{f_a}$ = Axial compressive stress in the post (psi)

P = Post load (lb)

A = cross sectional area of post (in^2)

- Evaluate the post:

$$\frac{\mathbf{f_a}}{\mathbf{F_a}} \leq \mathbf{1.0} \qquad \text{(5-5.09E(1)-2)}$$

where $\mathbf{f_a}$ = Axial compressive stress (psi)

$\mathbf{F_a}$ = Allowable axial compressive stress (psi)

For many cable braced bents, stresses in the lower cap and upper cap may be determined by analysis in the usual manner; which is by using the Case II load combination. This procedure is usually satisfactory because the Case I load combination rarely governs cap beam design. However, if the cables are attached near the end of a cap cantilever supporting a lightly loaded exterior beam, the Case I load combination, which includes the vertical component of the cable design load, may produce the maximum cap bending moment.

5-5.09E(2) Final Steps for Other Bridge Types

The procedure described in the preceding section for box girder bridges is generally applicable to slab and T-beam structures as well, except that for these structure types it is unnecessary to investigate the system for two load cases.

For the calculations above, the design load combination is:

- Design live load, plus total design dead load, plus total horizontal design load, plus the vertical component of the cable unit design load. All vertical loads act on the falsework in its deflected position.

5-5.10 Cable Load Tests

In the absence of sufficient technical data to identify the cable and establish its safe working strength, the contractor may elect to perform one or more load tests. Judgment will be required as to the total number of tests needed.

For example, if the cable type can be identified and if it is in uniformly good condition, a single test may be sufficient for all cable of the same type. However, if the cable cannot be identified, or if it is old and obviously worn, it may be necessary to test each reel or drum furnished.

If a load test is needed to determine the physical properties of the cable, the test must be performed in a qualified testing lab. Field test results are not acceptable because determining cable properties, such as the modulus of elasticity, the elastic stretch, and the net metallic area of the cable requires precise measurements obtainable only with specialized testing equipment.

See Section 7-2, *Load Tests*, for additional information pertaining to all types of load testing.

5-5.11 Splicing Cable

Splicing is prohibited in any cable used as bracing because of the uncertainties associated with cable splicing.

5-5.12 Cable Connection to Shackles

Cables may be connected to shackles with or without thimbles. Thimbles are used to protect the cable from deformation during loading and also increase the efficiency (or strength) of the cable connection.

5-5.12A Cable Connection to Shackles with Thimbles

See manufacturer's recommendations on the reduction in efficiency using thimbles.

5-5.12B Cable Connection to Shackles without Thimbles

When a cable is looped around a shackle pin the efficiency (strength) of the cable is reduced. Refer to Figure 5-20, *Cable Strength Efficiency When Bent Over Pins*, the efficiency (or strength) of the cable is directly related to the ratio of the pin diameter, **D**, and the nominal cable diameter, **d**, by:

$$\mathbf{E = 100 - \frac{50}{\sqrt{R}},\ R \leq 6} \qquad \text{(5-5.12B-1)}$$

$$\mathbf{E = 100 - \frac{76}{R^{0.73}},\ R > 6} \qquad \text{(5-5.12B-2)}$$

$$\mathbf{R = \frac{D}{d}} \qquad \text{(5-5.12B-3)}$$

where **E** = Cable efficiency (%)

R = Pin to cable ratio

D = Pin diameter (in)

d = Cable diameter (in)

If the pin diameter is the same as the cable diameter, then the ratio, **R**, is one (D/d = 1). Hence, the efficiency (or strength) in the cable loop is 50%. When a cable is looped around a shackle pin, the cable loop is two part around the pin, therefore the load on the cable in the loop is 1/2 of the applied load on the single cable, hence the net efficiency (or strength) of the cable loop is 100%.

Therefore, it is acceptable to connect cables to shackles without thimbles provided that the shackle pin diameter is the same or larger than the cable diameter. The cable diameter must not be larger than 7/8-inch diameter.

The wire rope connection efficiency in Table 5-2, *Wire Rope Connections*, do still apply, hence a cable looped around a shackle with the same diameter and connected with clips has an efficiency of 80%.

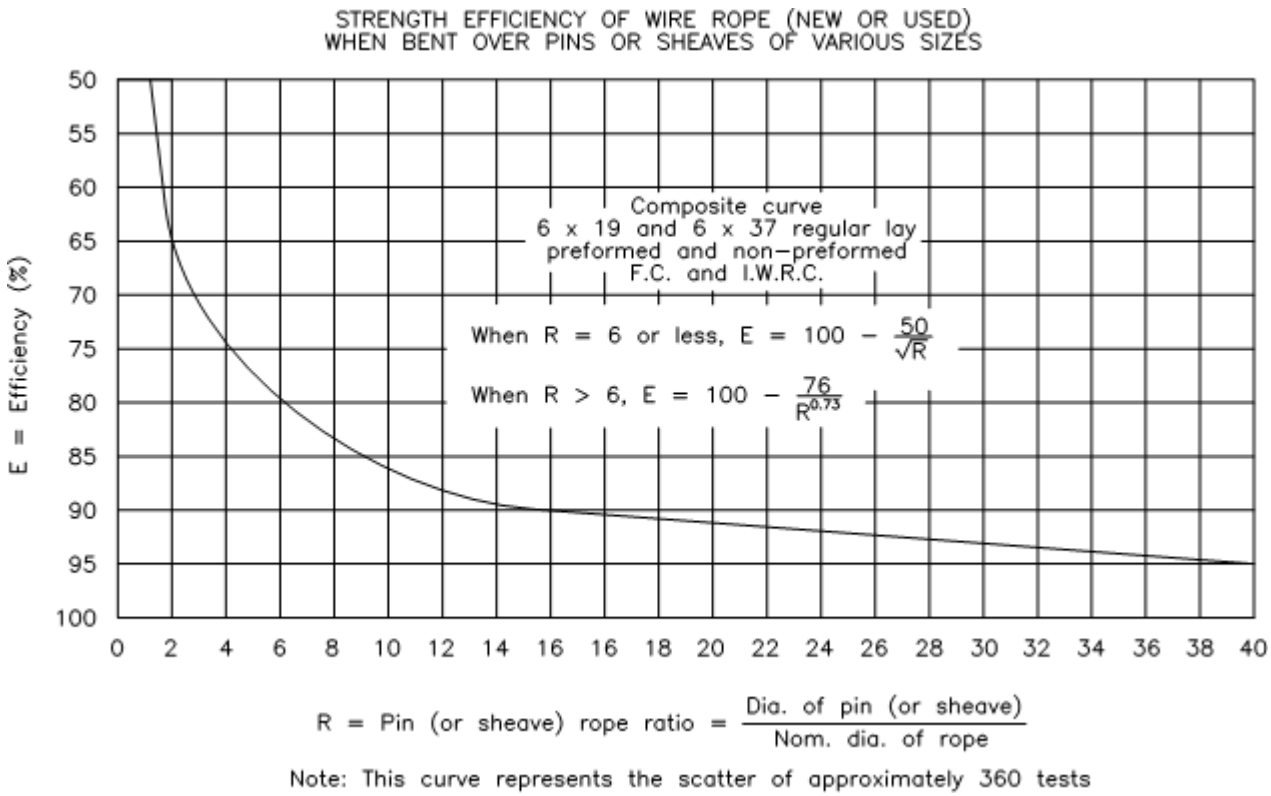

Figure 5-20. Cable Strength Efficiency When Bent Over Pins.

5-5.13 Cable Anchor Systems

In most cases, cables will be secured by fastening the end to a concrete anchor block, although cast-in-drilled hole (CIDH) anchors are sometimes used when relatively large forces must be resisted.

For either concrete anchor blocks or CIDH anchors, the method of connecting the cable to the anchorage is part of the design. The connecting device must be designed to resist both vertical (uplift) and horizontal forces.

For the procedure to review cable anchored to CIDH anchors, see Section 5-6, *Short Poured-In-Place Concrete Piles.*

5-5.13A Cable Anchored to Concrete Blocks

Concrete anchor blocks must be proportioned to resist both sliding and overturning. The weight of the anchor block must be reduced by the vertical component of the cable tension to obtain the net or effective weight to use in the anchorage computations.

For dry service conditions:

- The coefficient of friction assumed between the concrete anchor block and base material must not exceed the values in Table 5-6, *Coefficient of Friction For Concrete Anchor Blocks.*

For wet service conditions:

- Multiply the values for dry conditions by 0.67. This reduction must be used if it is likely that the base material will become wet during the construction period.
- If the blocks are submerged, account for buoyancy effects.

Table 5-6. Coefficient of Friction for Concrete Anchor Blocks.

Friction of Concrete Anchor Blocks	
Base Material	**Coefficient of Friction**
Sand	0.40
Clay	0.50
Gravel	0.60
Pavement	0.60

5-6 Short Poured-In-Place Concrete Piles

5-6.01 Introduction

CIDH cable anchors should be evaluated in accordance with the procedure below. Example calculations can be found in Appendix D *Example Problems,* Examples 29 and 30m *Short Poured-In-Place Concrete Piles*.

When CIDH anchors are used, the shop drawings should show:

- Pile diameter and length.
- Cementitious material content for concrete design.
- Reinforcing steel details.
- Cable anchor device.
- Soil pressure and properties.

Since the load resisting capacity of a CIDH anchor is dependent on the characteristics of the soil into which the pile has been cast, the contractor's design calculations should be given a cursory review to determine whether the assumed soil pressure and soil properties are consistent with the type of soil at the job site. Also determine whether the design procedure follows recommended practice for piles subject to both uplift and lateral forces. Any inconsistencies should be brought to the contractor's attention immediately, and supplemental details and/or calculations requested.

Design of piles to resist combined uplift and lateral forces is a sophisticated design procedure, which is sometimes approached superficially in the falsework design. However, the requirement for design calculations in the *Standard Specifications*, Section 48-2.01C(2), *Submittals - Shop Drawings,* applies to piles as well as other elements of the falsework system. In the absence of calculations to support the design, the falsework submittal is not complete and the contractor should be so informed.

The following is a brief review of the technical aspects and a procedure which can be used for investigating rigid piles. This is not a comprehensive coverage of the subject, there are soil complexities not covered, and some caution should be used in its application if primary loads of extended duration are to be supported.

The pile must have the structural capacity to resist tensile, shear, and bending stresses. Reinforcing steel should extend the full length of these piles.

The Division of Engineering Services (DES) Geotechnical Services in Sacramento has furnished the SC criteria for the analysis of loadings on poured-in-place concrete piles. The analysis is dependent on proper selection of soil type. It will be important to determine whether the soil into which the pile is constructed is principally cohesive or cohesionless. Analytical results for pile uplift and lateral loading represent ultimate resistance values.

Load resisting capacity is dependent upon the characteristics of the soil into which the pile has been cast. Preliminary assumptions may be made about soil properties at the time of review of the shop drawings. A final determination of the pile's capacity should be made, however, when the pile hole is excavated and the actual soil can be inspected. The type of soil in the upper third of the hole, its degree of compaction and whether ground water is (or may be), encountered are of primary importance.

Pile loadings are considered in three separate categories:

- Pile uplift
- Lateral loads
- Resistance to combined uplift and lateral loads

Accompanying sample problems are provided in Appendix D *Example Problems,* Examples 29 and 30, *Short Poured-In-Place Concrete Piles*.

5-6.02 Pile Uplift

Pile uplift, acting either vertically or at an angle, is resisted by soil-pile friction (shearing resistance) and the physical weight of the pile.

The shearing resistance of the soil-pile interface is computed differently for cohesive soils than it is for cohesionless soils. The internal angle of friction of the soil is not utilized for poured-in-place piles because in hard ground (high friction angle) the drilling operation loosens the adjacent soil, and in loose ground (low friction angle) the drilling operation tends to compact the adjacent soil particles.

Ultimate pile resistance to uplift is determined by adding the weight of the pile to the quantity of the appropriate unit shearing resistance value multiplied by the surface area of the pile. No additional provisions are made for irregularities along the pile-soil interface.

$$\mathbf{R = \pi dzS + W} \qquad (5\text{-}6.02\text{-}1)$$

where **R** = Resistance to pile uplift (lb)

d = Pile diameter (ft)

z = Depth below ground surface (ft)

S = Unit shearing resistance on the soil-pile interface (psf)

W = Pile weight (lb)

Generally, working load values are to be limited to no more than 1/2 the ultimate load values, which provides a minimum **FS = 2**.

5-6.02A Pile Uplift in Cohesionless Soil

For cohesionless soil, the soil-pile friction (shearing resistance) may be computed using the following equation:

$$\mathbf{S = \beta\sigma_z \leq 4{,}000\ psf} \qquad (5\text{-}6.02A\text{-}1)$$

$$\mathbf{\beta = 1.5 - 0.315\, z^{1/2}\ but\ 0.25 \leq \beta \leq 1.2} \qquad (5\text{-}6.02A\text{-}2)$$

where **S** = Soil-pile friction, shearing resistance (psf)

β = Reduction factor for cohesionless soils

σ_2 = Effective overburden soil weight (psf). Below the water table the weight of water is subtracted from the soil unit weight so that only the submerged soil weight is used

5-6.02B Pile Uplift in Cohesive Soil

The soil-pile friction equations for cohesive soils differ substantially for pile penetrations of less than 5 feet versus piles over 5 feet in depth. The equations also depend on whether the pile is greater or less than 18 inches in diameter:

$$\mathbf{R_s = \pi d z S} \quad \text{(5-6.02B-1)}$$

$$\mathbf{S = a_z C \leq 5,500\ psf} \quad \text{(5-6.02B-2)}$$

where $\mathbf{R_s}$ = Shearing resistance (lb)

d = Diameter of the pile (ft)

z = Depth below ground surface (ft)

S = Unit shearing resistance (psf)

$\mathbf{a_z}$ = An empirical unitless reduction factor derived from load testing which accounts for clay shrinkage and lateral pile loadings. This variable depends on the depth of pile penetration, having one value for a depth up to 5 feet, and another for penetration over 5 feet

C = Soil cohesion (undrained shear strength) (psf)

Reduction factor, $\mathbf{a_z}$, for pile diameters d > 18":

- The reduction factor, $\mathbf{a_z}$, for the first 5 feet of penetration is 0. The reduction factor remains constant at a_z = 0.55 for all depths greater than 5 feet. This may be expressed in equation form as:
    1. For short piles, 5' or less embedment:

$$\mathbf{a_{z(0-5)} = 0 \quad for\ 0 \leq z \leq 5\ feet} \quad \text{(5-6.02B-3)}$$

    2. For pile lengths with more than 5' embedment:

$$\mathbf{a_{z(0-5)} = 0 \quad for\ 0 \leq z \leq 5\ feet} \quad \text{(5-6.02B-4)}$$

$$\mathbf{a_{z(>5)} = 0.55 \quad for\ z > 5\ feet} \quad \text{(5-6.02B-5)}$$

Reduction factor, $\mathbf{a_z}$, for pile diameters d ≤ 18":

- The reduction for the top 5 feet of pile varies from 0 at z = 0 feet to 0.55 at z = 5 feet, then remains constant at 0.55 for all depths greater than 5 feet. For lengths

of pile between 0 and 5 feet, prorate the reduction factor. This concept may be expressed in equation form as:

1. For short piles, 5 feet or less embedment:

$$\mathbf{a_{z(0-5)} = \left(\frac{0+0.55}{2}\right)\frac{z}{5} = (0.275)\frac{z}{5} = 0.055z} \qquad \text{(5-6.02B-6)}$$

2. For pile lengths with more than 5 feet embedment

$$\mathbf{a_{z(0-5)} = \left(\frac{0+0.55}{2}\right)\frac{z}{5} = (0.275)\frac{z}{5} = 0.055z} \qquad \text{(5-6.02B-7)}$$

$$\mathbf{a_{z(>5)} = 0.55} \qquad \text{(5-6.02B-8)}$$

5-6.03 Lateral Loads

Tests have shown that soil resistance to lateral pile loading is greater than that predicted by Rankine equations. For clays the ultimate passive resistance can be as large as 9 times the shear strength, **C**, and for cohesionless soils the ultimate resistance can be 3 times as large as computed Rankine values. The soil resistance acting on isolated piles to a lateral force applied at or near the ground surface may be somewhat depicted as shown in Figure 5-21, *Pile Soil Resistance*.

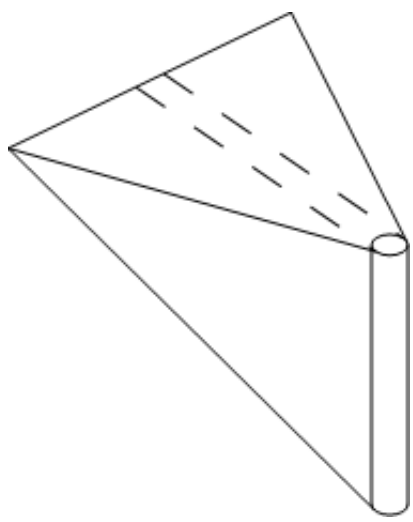

Figure 5-21. Pile Soil Resistance.

Convenient concepts and equations have been developed by Broms for cohesive and cohesionless soils. If a few important soil properties are known, or can be determined, it is possible to compute soil resisting values and pile moments resulting from the application of lateral pile forces at or near the ground surface.

Ultimate pile resistance to lateral loading may be determined by failure of the soil along the total pile length in the case of short piles, or by the yield moment of the pile itself for longer piles. Short unrestrained piles are those piles having a length to diameter ratio of **L/d ≤ 20** providing the yield moment, $\mathbf{M_y}$, of the pile will be greater than the maximum resisting moment, $\mathbf{M_{ULT}}$, furnished by the soil.

Embedment of piles should be a minimum of 4 times the pile diameter to achieve sufficient soil resisting capacity. The point of rotation of rigid short piles may be assumed to occur between 0.70 to 0.75 times the embedded length; where the larger value coincides with the largest lateral loadings. Soil resisting values are determined by using the lateral resisting value of up to 3 times the passive coefficient, $\mathbf{K_p}$, for cohesionless soil and as much as 9 times the undrained shear strength, $\mathbf{C_u}$, of cohesive soils.

Piles may be considered to act individually provided the pile spacing exceeds 4 pile diameters (4d). When piles are spaced closer than 2 pile diameters (2d), the piles and the soil within the pile group may be considered to act as a single unit.

As piles under load deflect they place the forward soil in a passive condition. When a pile is in clay, a void will be left behind the pulled pile until the clay crumbles or swells. When a pile is in granular material, the soil will soon fill the void behind the pulled pile. When a pile is unloaded, it will generally not return to its original position; some of the pulled deflection will remain. It can readily be seen that unloading and reloading a pile greatly decreases the soils moment capacity for that pile.

Generally, working load values are to be limited to no more than 1/2 the ultimate load values, which provides a minimum **FS = 2** assuming a one time loading of the soil around the pile.

For each subsequent time a pile is to be loaded in the same direction, an additional safety factor of 0.25 is to be added to the previous value as defined by the following:

$$\mathbf{FS = 2 + 0.25(x - 1)} \qquad (5\text{-}6.03\text{-}1)$$

where **FS** = Factor of safety

x = Number of uses in the same direction for the same horizontal component

5-6.03A Lateral Loading in Cohesionless Soil

Considerations used for piles in cohesionless soil include increasing the Rankine passive resistance by a factor of 3, ignoring active pressures on the back side of the

pile, and assuming that soil along the total length of buried pile provides resistance at the moment of loading.

Figure 5-22, *Soil Reaction and Bending Moment (Cohesionless Soil),* depicts soil reaction and pile bending moment diagrams for short and long isolated piles in cohesionless soil. The passive resistance at the toe of the short piles is replaced by a concentrated load acting at the pile tip to simplify the moment equation. A plastic hinge is assumed for long piles and the maximum bending moment will be limited to the yield moment, $\mathbf{M_y}$, of the pile.

The maximum moment for short piles occurs at the location of zero shear. For granular soils this plane of zero shear is located at a pile depth of $\mathbf{e + f_g}$ below the plane of application of the lateral load. The distance $\mathbf{f_g}$ equals the length from the ground surface to the plane of zero-shear.

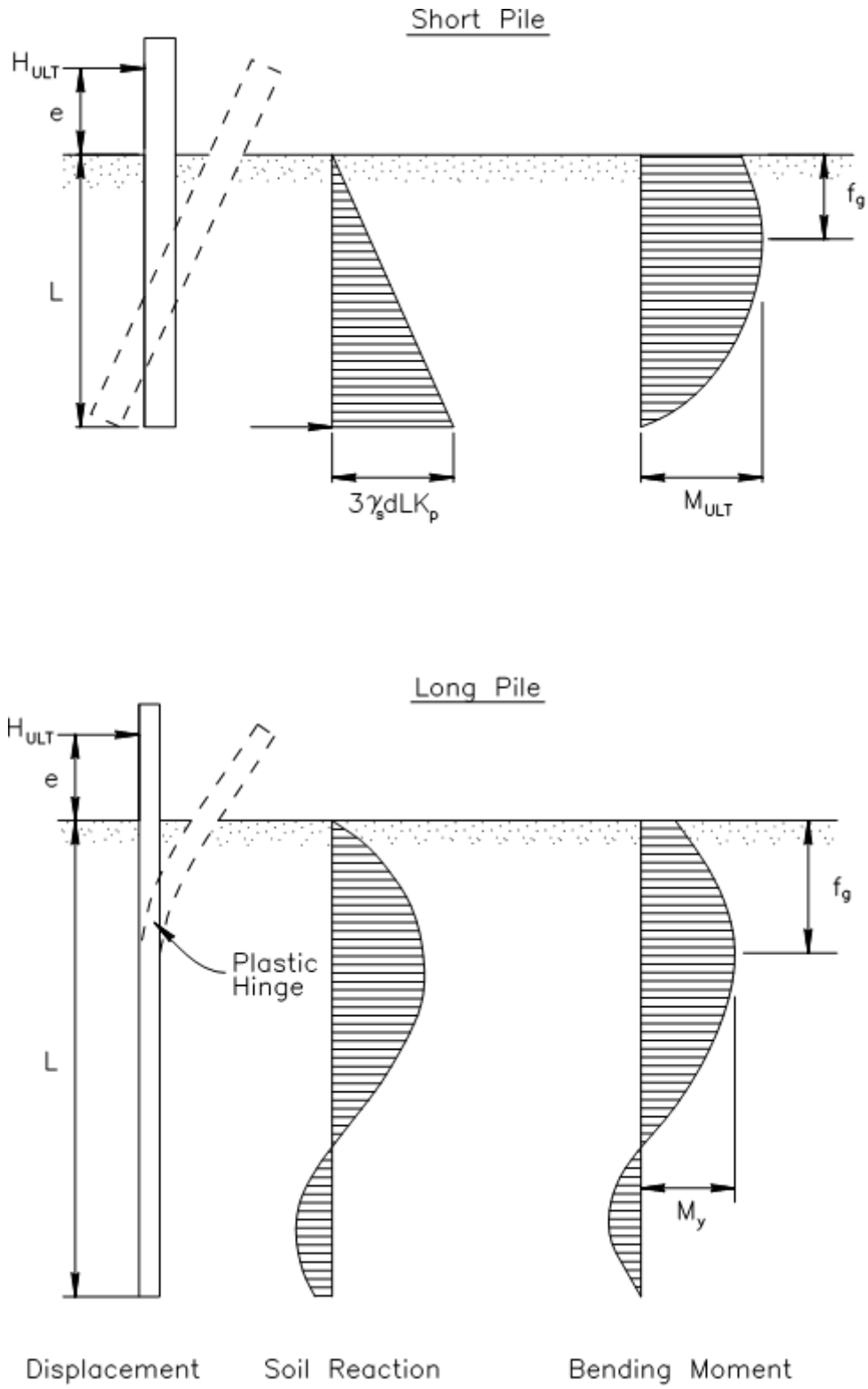

Figure 5-22. Soil Reaction and Bending Moment (Cohesionless Soil).

Equating lateral forces gives:

$$\left(\mathbf{f_g}\right)^2 = \frac{\mathbf{H_{ULT}}}{\mathbf{1.5\gamma_s d K_p}} \qquad (5\text{-}6.03A\text{-}1)$$

where $\mathbf{f_g}$ = Length from the ground surface to the plane of zero-shear (ft)

$\mathbf{H_{ULT}}$ = Ultimate lateral load (lb)

γ_s = Soil density (pcf)

d = Pile diameter (ft)

$\mathbf{K_p}$ = Passive coefficient for cohesionless soil

Based on failure of the soil, the maximum moment occurs at a depth of $\mathbf{e + f_g}$:

$$\mathbf{M_{ULT} = H_{ULT}\left(e + \frac{2f_g}{3}\right)} \qquad (5\text{-}6.03A\text{-}2)$$

where $\mathbf{M_{ULT}}$ = Ultimate moment (ft-lb)

$\mathbf{H_{ULT}}$ = Ultimate lateral load (lb)

e = Length from ground surface to ultimate lateral load (ft)

$\mathbf{f_g}$ = Length from the ground surface to the plane of zero-shear (ft)

If the ultimate moment, $\mathbf{M_{ULT}}$, is calculated to be greater than the pile limiting yield moment, $\mathbf{M_y}$, a long pile is indicated and therefore $\mathbf{H_{ULT}}$ must be limited by using $\mathbf{M_{ULT} = M_y}$.

Figure 5-23, *Pile Ultimate Lateral Resistance (Short Piles)* contains curves developed by Broms which relate the pile embedment length ratio, **L/d**, to the ultimate lateral soil resistance for various **e/d** ratios. From this figure $\mathbf{H_{ULT}}$ can be determined for short piles.

Figure 5-24, *Pile Ultimate Lateral Resistance (Long Piles),* may be used for long piles. Broms' curves for values of **e/d** relate the soil ultimate lateral resistance to the yield moment of the pile. This figure is used when the pile embedment length ratio **L/d > 20** and when the yield moment of the pile is less than the ultimate lateral soil resistance.

The maximum safe single use working load for free headed piles in cohesionless soils may be taken as 1/2 of the ultimate load values.

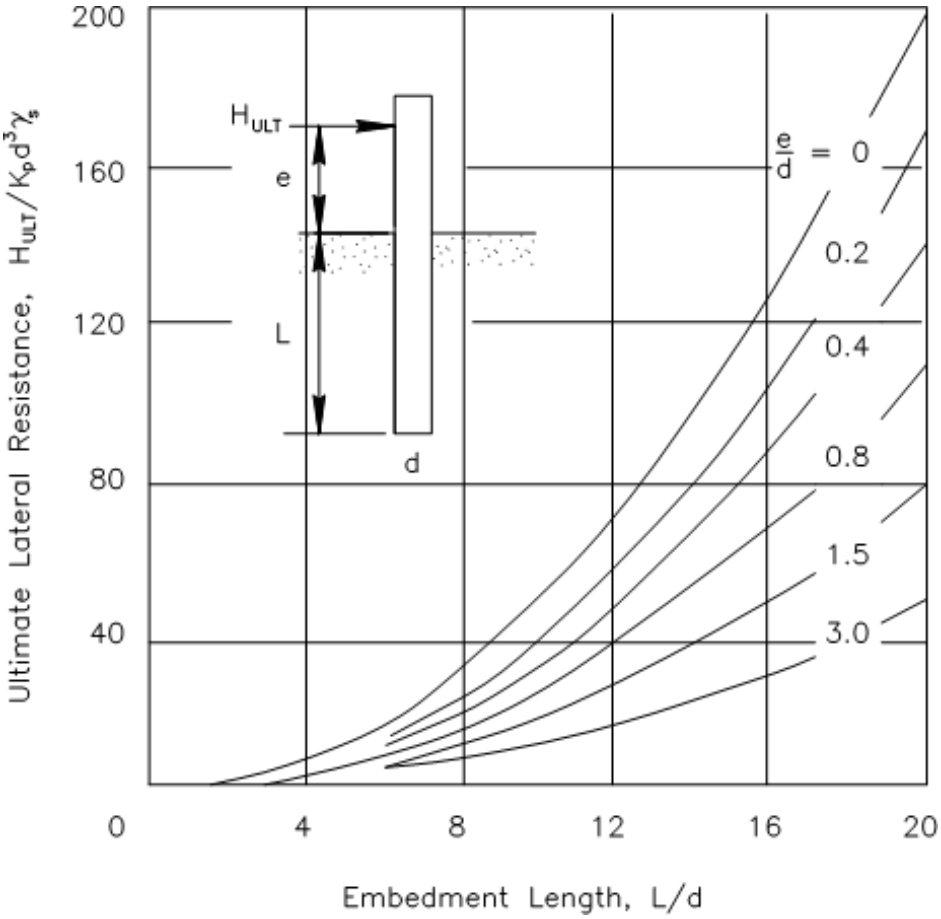

Figure 5-23. Pile Ultimate Lateral Resistance (Short Piles)

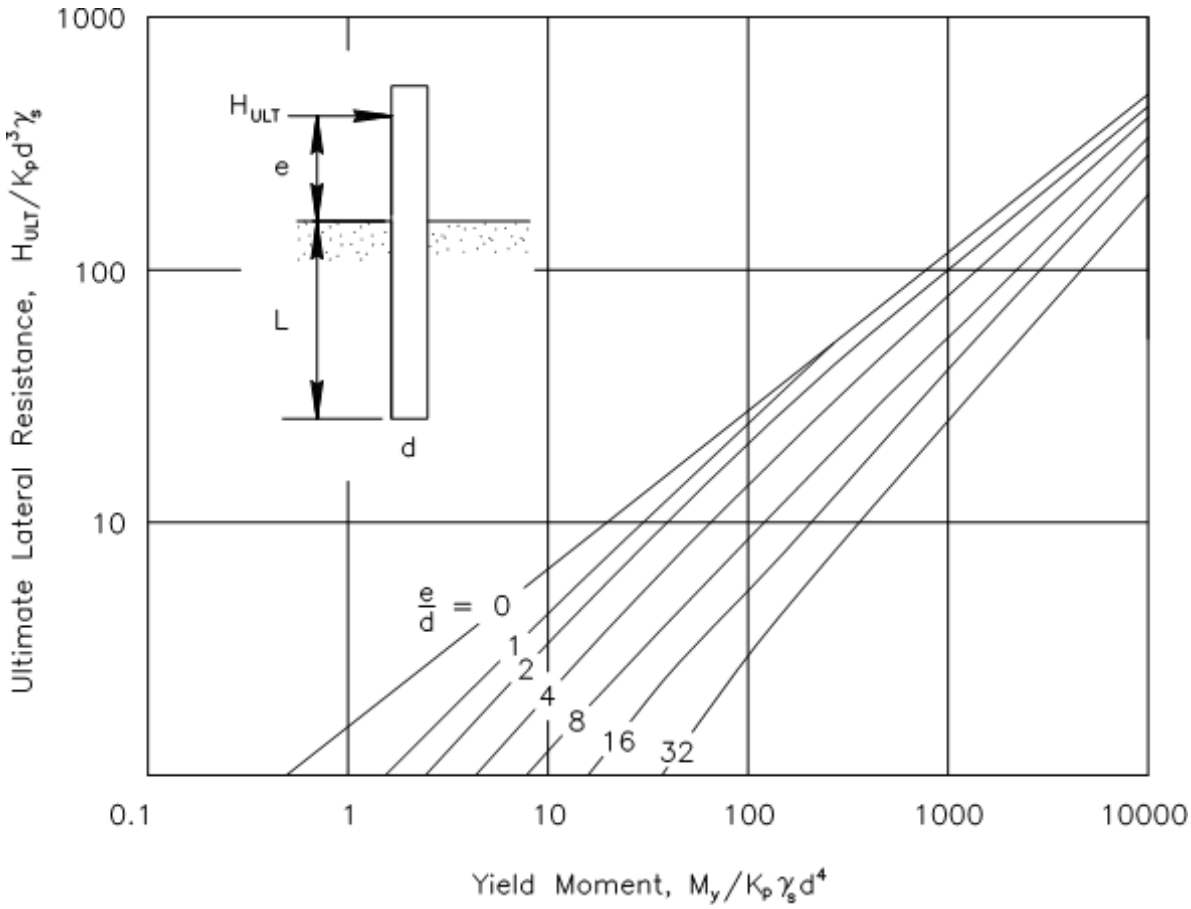

Figure 5-24. Pile Ultimate Lateral Resistance (Long Piles)

5-6.03B Lateral Loading in Cohesive Soil

The ultimate soil resistance for piles in cohesive soils increases to some maximum value at approximately 3 pile diameters below the ground surface then remains fairly constant at greater depth. Literature suggests using a soil distribution of zero between ground surface and a depth of 1.5 times the pile diameter (**1.5d**) and then using a value of 9 times the undrained shear strength (**$9C_u$**) for the remainder of the pile depth.

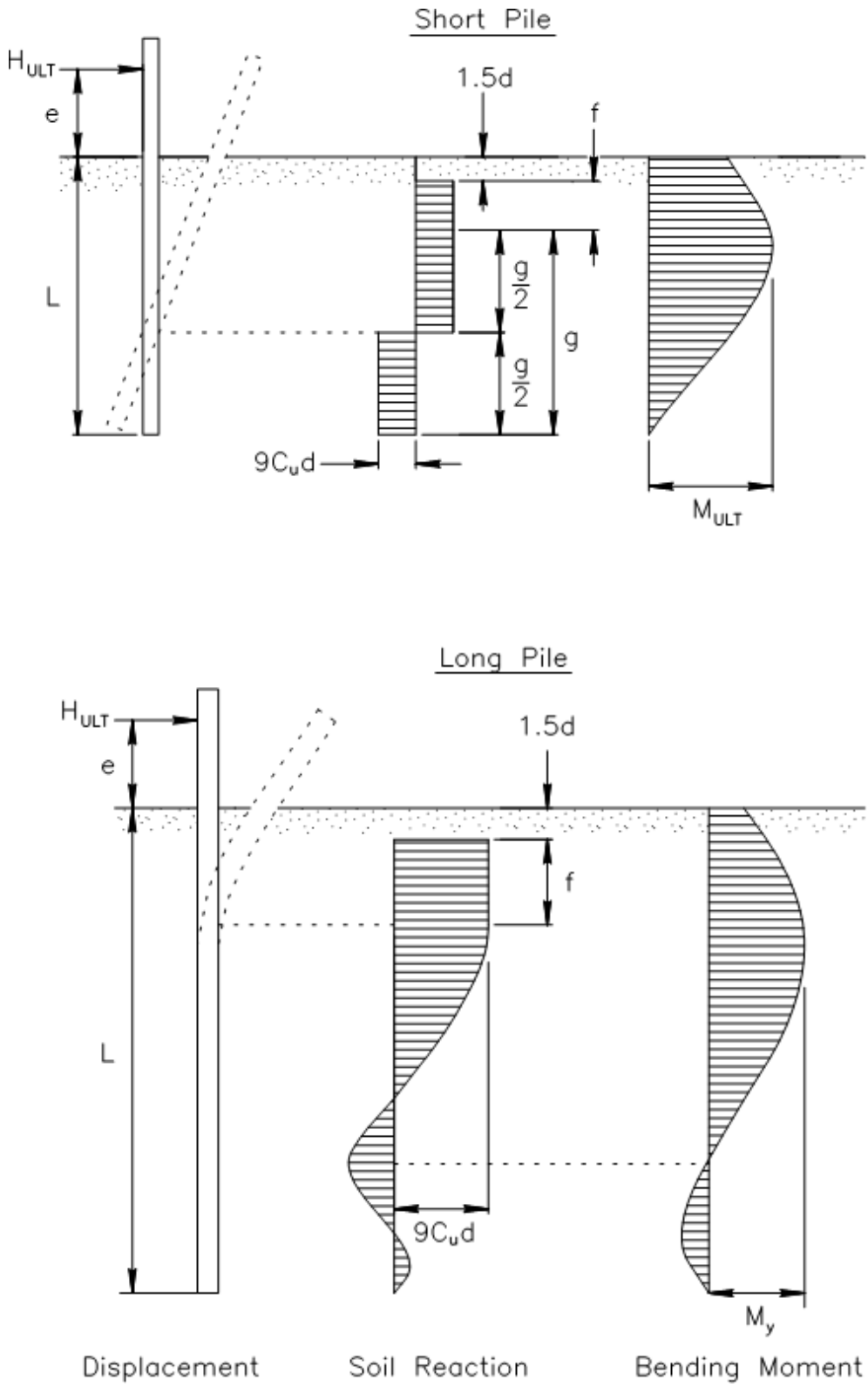

Figure 5-25. Soil Reaction and Bending Moment (Cohesive Soil).

Figure 5-25, *Soil Reaction and Bending Moment (Cohesive Soil),* depicts soil reaction and bending moment diagrams for short and for long piles in cohesive soils. Short piles have a limiting embedment length ratio of **L/d = 20**. Piles having ratios **L/d > 20** are considered to be long piles. For long piles a plastic hinge is assumed in the vicinity of the maximum moment. The yield moment, $\mathbf{M_y}$, of long piles will generally limit the soil resisting maximum moment, $\mathbf{M_{ULT}}$, so that $\mathbf{M_{ULT} = M_y}$ should be used.

The maximum moment for short piles occurs at the location of zero shear. For cohesive soils the plane of zero shear is located at a pile depth of $\mathbf{e + 1.5d + f_c}$ below the plane of application of the horizontal force. The distance $\mathbf{f_c}$ develops from equating horizontal forces:

$$\mathbf{f_c = \frac{H_{ULT}}{9C_u d}} \qquad \text{(5-6.03B-1)}$$

where $\mathbf{f_c}$ = Length from 1.5d below ground surface to point of zero shear (ft)

$\mathbf{H_{ULT}}$ = Ultimate lateral load (lb)

$\mathbf{C_u}$ = Undrained shear strength (psf)

d = Pile diameter (ft)

Based on failure of the soil, the maximum moment occurs at a depth of $\mathbf{e + 1.5d + f_c}$ and the maximum moment is:

$$\mathbf{M_{ULT} = H_{ULT}(e + 1.5d + 0.5f_c)} \qquad \text{(5-6.03B-2)}$$

where $\mathbf{M_{ULT}}$ = Ultimate moment (ft-lb)

$\mathbf{H_{ULT}}$ = Ultimate lateral load (lb)

e = Length from ground surface to ultimate lateral load (ft)

d = Pile diameter (ft)

$\mathbf{f_c}$ = Length from (1.5d) below ground surface to point of zero shear (ft)

If the ultimate moment, $\mathbf{M_{ULT}}$,is calculated to be greater than the yield moment, $\mathbf{M_y}$, of the pile, a long pile is indicated and $\mathbf{H_{ULT}}$ must be limited by using $\mathbf{M_{ULT} = M_y}$.

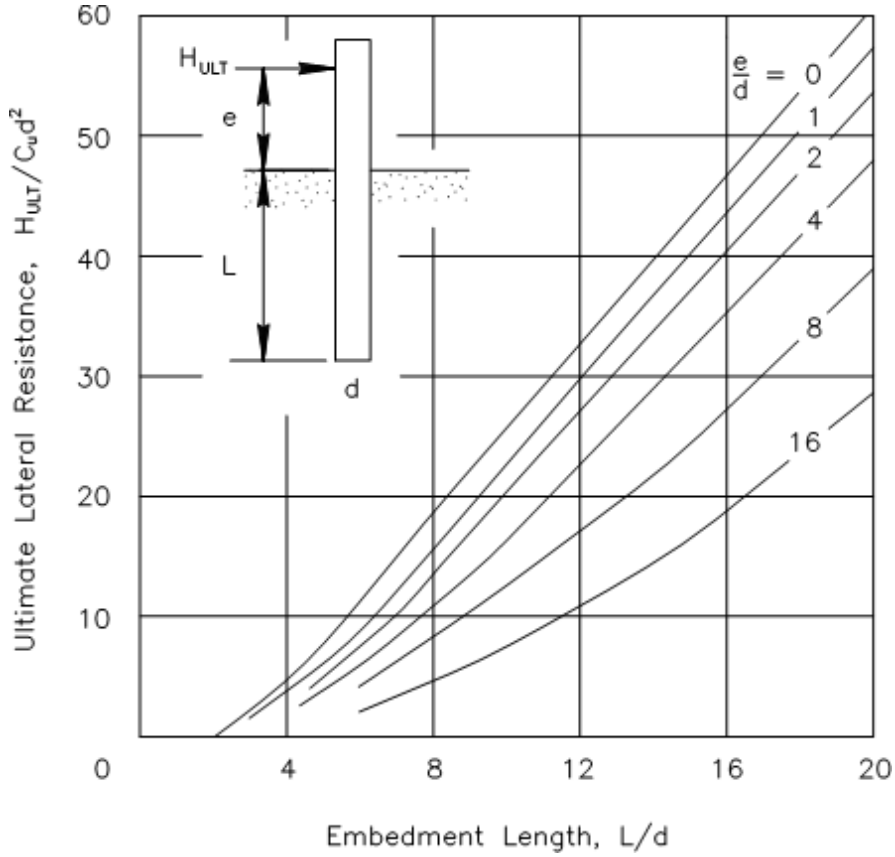

Figure 5-26. Ultimate Lateral Resistance and e/d Ratio (Short Piles).

Figure 5-26 *Ultimate Lateral Resistance and e/d Ratio (Short Piles)* contains curves developed by Broms for short piles which relate the pile embedment depth ratio, **L/d**, to the ultimate lateral soil resistance for various **e/d** ratios.

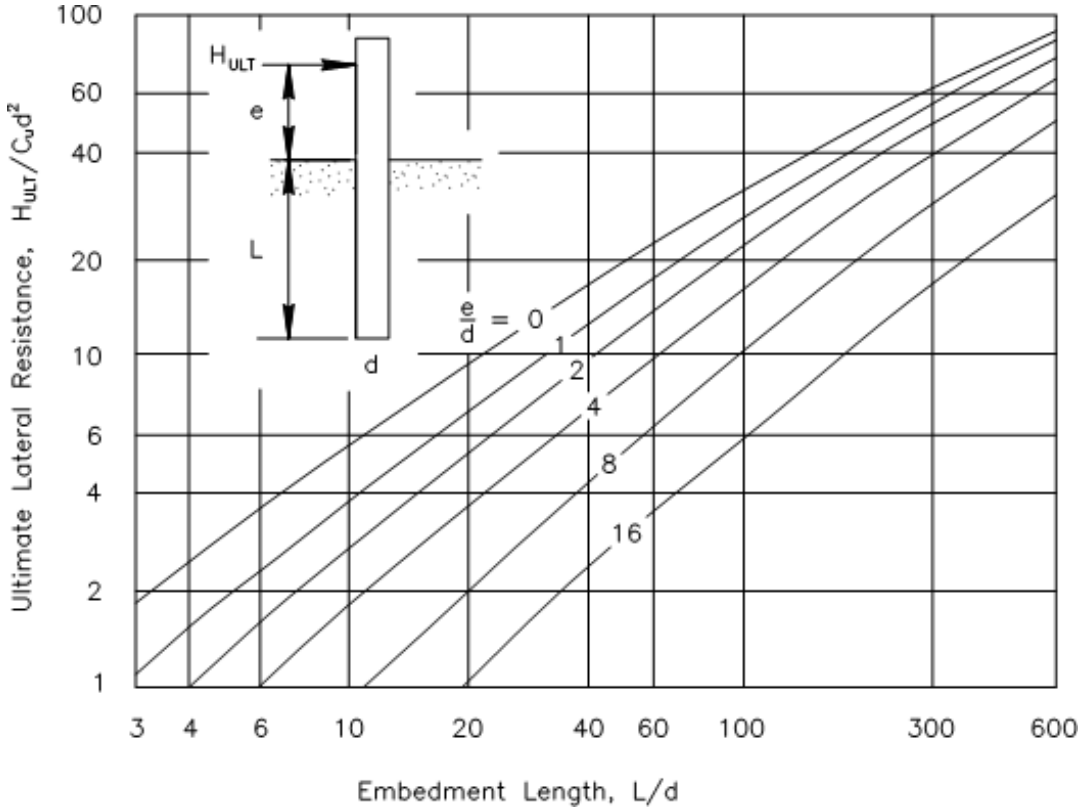

Figure 5-27. Ultimate Lateral Resistance and e/d Ratio (Long Piles).

Figure 5-27 *Ultimate Lateral Resistance and e/d Ratio (Long Piles)* may be used for long piles. Curves developed by Broms for **e/d** values relate the soils ultimate lateral resistance to the yield moment of the pile. This figure is used when the pile embedment length ratio **L/d > 20** and when the yield moment of the pile is less than the moment due to the ultimate lateral soil resistance.

The safe single use working load for free headed piles in cohesive soil may be taken as 1/2 of the ultimate load value.

5-6.04 Concrete Stresses

Concrete stresses in the pile may be computed by rigorous analysis; or may be approximated by assuming an average compressive condition over half of the pile width. The maximum compressive stress is located on one face of the pile. It should be assumed that the concrete will not take tensile forces on the other half of the pile. Tensile forces will be resisted by reinforcing steel.

For simplified compressive stress analysis use:

$$\mathbf{f_c = \frac{Md}{2I_g} - \frac{V'}{A_g} \leq \frac{f'_c}{2}} \qquad (5\text{-}6.04\text{-}1)$$

where $\mathbf{f_c}$ = Concrete compressive stress (psi)

M = Maximum moment in pile (in-lb)

d = Pile diameter (in)

$\mathbf{I_g}$ = Moment of Inertia on the gross pile section (in^4)

$\mathbf{A_g}$ = Gross cross sectional area of the pile (in^2)

V'= Tensile force (vertical force component) less pile weight above plane of zero shear (lb). Distance from pile top to the plane of zero shear is defined as M_{ULT}/H_{ULT}

$\mathbf{f'_c}$ **=** Concrete compressive strength

The computed maximum compressive stress, $\mathbf{f_c}$, shall not be greater than 1/2 of the concrete compressive strength, $\mathbf{f'_c}$, anticipated at the time the pile is to be loaded.

The allowable shear in the pile, $\mathbf{V_u}$. normal to the pile should not exceed 2 times the square root of concrete compressive strength $(\mathbf{2\sqrt{f'_c}})$**.**

5-6.05 Bar Reinforcing Stresses

Bar reinforcing steel stresses may be analyzed by rigorous methods; or may be approximated by making several assumptions.

Ignore concrete stress and assume the pile moment is to be resisted by the reinforcing steel. For symmetrical reinforcing it can be assumed that the reinforcing takes compression as well as tension. A simplified equation may be used to determine the tensile reinforcing steel stress.

$$\mathbf{f_s = \frac{Md_s}{2I_{bars}} + \frac{V'}{\Sigma A_s}} \qquad (5\text{-}6.05\text{-}1)$$

$$\mathbf{I_{bars} = \Sigma\left[I_0 + A_s\left(\frac{d_s}{2}\right)^2\right] \approx \Sigma A_s\left(\frac{d_s}{2}\right)^2} \qquad (5\text{-}6.05\text{-}2)$$

where: $\mathbf{f_s}$ = Tensile stress in reinforcing steel (psi)

M = Maximum moment in pile (in-lb)

$\mathbf{d_s}$ = Distance between center of gravity of bars either side of the pile neutral axis (in)

V' = Tensile force (vertical force component) less weight of pile above plane of zero shear (lb), which is located a distance of $\mathbf{M_{ULT}/H_{ULT}}$ below the pile top.

$\mathbf{A_s}$ = Area of reinforcing steel on either side of the neutral axis (in^2)

For 2 reinforcing bars, one either side of the pile center line symmetrically placed, the simplified equations is:

$$\mathbf{f_s = \frac{M\frac{d_s}{2}}{2A_s\left(\frac{d_s}{2}\right)^2} + \frac{V'}{\Sigma A_s} = \frac{M}{A_s d_s} + \frac{V'}{\Sigma A_s}} \qquad (5\text{-}6.05\text{-}3)$$

The allowable stress in the reinforcing steel should be limited to:

$$\mathbf{F_s \leq 0.70F_y} \qquad (5\text{-}6.05\text{-}4)$$

5-6.06 Resistance to Combined Uplift and Horizontal Load

Pile load tests have confirmed that the uplift resistance of piling is increased when the pile is also subjected to a lateral loading. Therefore it is believed acceptable to simply limit combined loadings so as not to exceed the permissible $\mathbf{H_{ULT}}$ and $\mathbf{V_{ULT}}$ loadings (safety factors considered).

Design load is limited to the smaller of either $\mathbf{V/\sin\theta}$ or $\mathbf{H/\cos\theta}$. See Figure 5-28, *Load Components for Plumb Piles*.

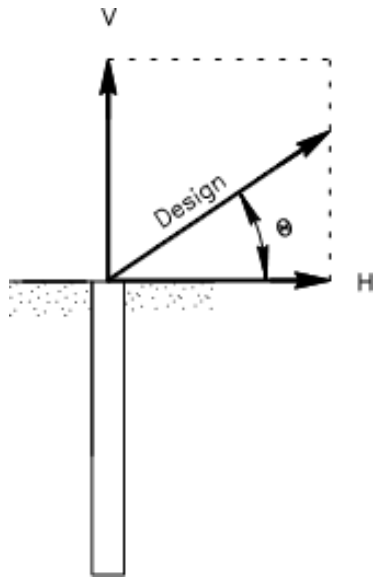

Figure 5-28. Load Components for Plumb Piles.

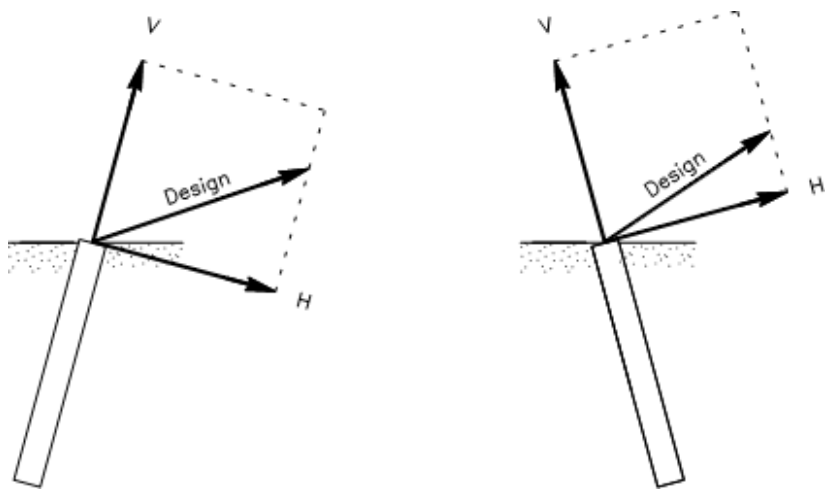

Figure 5-29. Load Components for Battered Piles.

Tests have also demonstrated that when the top of the pile is battered toward the load its lateral capacity is substantially greater than when battered away from the load. Force components **H** and **V** for battered piles are derived in the same manner as for plumb piles. The design load is then limited to the lesser of the **H** or **V** load resolved to the slope at which the design load will be acting. Piles battered toward and away from the design loading are depicted in Figure 5-29, *Load Components for Battered Piles*.

5-7 Combining Stresses

5-7.01 Introduction

As noted elsewhere in this manual, stresses produced by the simultaneous application of horizontal and vertical forces need to be combined in those situations where bending must be considered to prevent overstressing of an axially-loaded member of the falsework system. Examples of such situations include, but are not limited to, bents braced by cables, moment resisting connections, moment resisting piles, pile bents over water where the bracing extends only to the water surface, and multi-tiered frame bents where the bracing system, although adequate to resist the collapsing force, does not fully support the vertical members in the bent and/or cannot prevent side sway.

5-7.02 Design Criteria

The ability of a falsework member to resist the combined effect of bending and axial compression is evaluated by the combined stress expression. The combined stress expression, or interaction formula as it is sometimes called, establishes a limiting relationship between bending and compressive stresses, such that the sum of the actual/allowable ratios of the two stresses may not exceed 1.0. In formula form the combined stress expression is:

$$\frac{f_b}{F_b} + \frac{f_c}{F_c} \leq 1.0 \qquad (5\text{-}7.02\text{-}1)$$

where f_b = Calculated bending stress

f_c = Calculated compressive stresses

F_b = Allowable bending stress

F_c = Allowable axial compressive stress

The combined stress expression may be used to determine the adequacy of members to resist bending and axial compression in all cases except driven timber piles. Timber piles should be evaluated in accordance with the procedures discussed in Chapter 8, *Foundations*.

5-8 Longer T-Beam Falsework Spans

5-8.01 Introduction

It is acceptable to exceed the specified falsework span length provided the criteria below is satisfied. For additional information about T-Beams see Section 4-6, *T-Beam Bridges*.

5-8.02 Design Criteria

Longer T-Beam falsework spans may only be considered if the deflection due to concrete loading in the longer span is the same as the maximum deflection for the specified falsework span length. To fulfill this requirement, the moment of inertia of the longer span stringer must be greater than that required for a stringer for the specified span length.

The moment of inertia of the longer falsework stringer can be found by equating the deflection of the shorter and longer spans as shown below.

The deflection of the stringer using the specified span length is:

$$\Delta_1 = \frac{5wL_1^4}{384EI_1} \qquad (5\text{-}8.02\text{-}1)$$

$$L_1 = 12(14 + 8.5D) \qquad (5\text{-}8.02\text{-}2)$$

where Δ_1 = Deflection of falsework stringer using specified span length (in)

w = Uniform load on stringer (lb/in)

L_1 = Specified falsework span length (in)

E = Modulus of elasticity (psi)

I_1 = Moment of inertia of stringer for specified span length (in^4)

D = T-Beam depth measured from top of deck to bottom of girder (ft). For T-beams with varying depth (haunch) use the minimum depth

The deflection of the stringer using the proposed longer falsework span length is:

$$\Delta_2 = \frac{5wL_2^4}{384EI_2} \qquad (5\text{-}8.02\text{-}3)$$

where Δ_2 = Deflection of falsework stringer using proposed span length (in)

w = Uniform load on stringer (lb/in)

L_2 = Proposed falsework span length (in)

E = Modulus of elasticity (psi)

I_2 = Moment of inertia of stringer for proposed span length (in^4)

Equating the two deflections and solving for I_2 yields the required moment of inertia for the falsework stringer for the proposed span length:

$$\mathbf{I_2 = I_1 \left(\frac{L_2^4}{L_1^4}\right)} \qquad (5\text{-}8.02\text{-}4)$$