Dist	COUNTY	ROUTE	POST MILES TOTAL PROJECT	SHEET No.	TOTAL SHEETS
DDDD	CCCC	RRRR	PPPP	????	####

REGISTERED CIVIL ENGINEER X DATE

MM/DD/YYYY
PLANS APPROVAL DATE

REGISTERED PROFESSIONAL ENGINEER No. X Exp. X CIVIL STATE OF CALIFORNIA

THE STATE OF CALIFORNIA OR ITS OFFICERS OR AGENTS SHALL NOT BE RESPONSIBLE FOR THE ACCURACY OR COMPLETENESS OF SCANNED COPIES OF THIS PLAN SHEET.

THE REGISTERED CIVIL ENGINEER FOR THE PROJECT IS RESPONSIBLE FOR THE SELECTION AND PROPER APPLICATION OF THE COMPONENT DESIGN AND ANY MODIFICATIONS SHOWN.

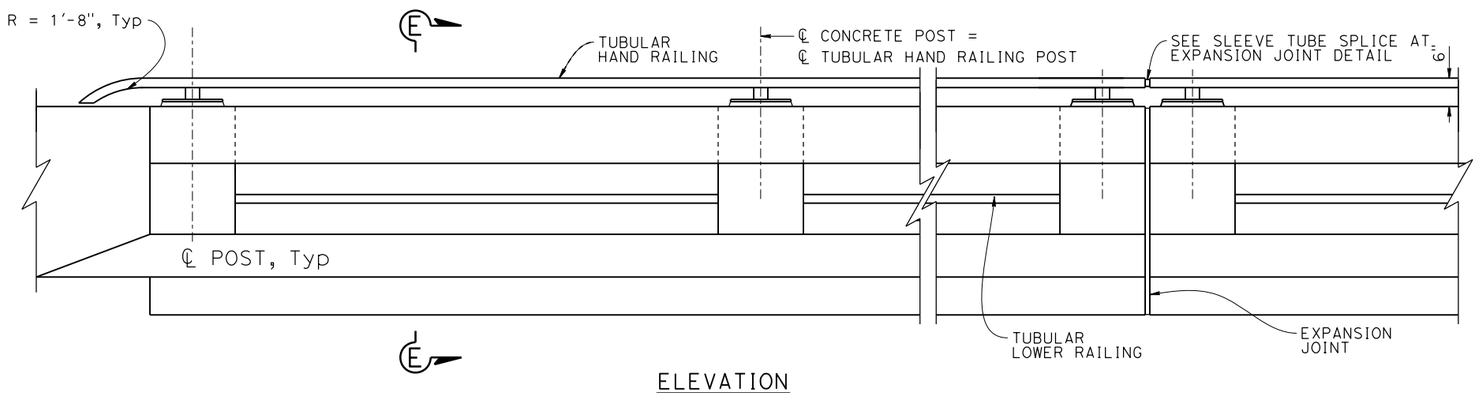

ELEVATION

NOTES:

1. Tubular hand railing posts shall be normal to railing.
2. Tube splices shall be located in the tubes spanning deck or wall joints. Increase joint width in tubes to match expansion joint width and increase sleeve length accordingly.
3. Top rail tube shall be continuous over not less than two posts.
4. 3/8" nut tack welded to sleeve may be replaced by drilled and tapped hole in sleeve.

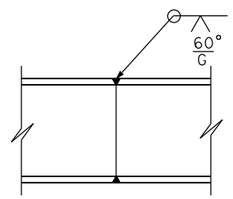

TUBE-WELDED SPLICE

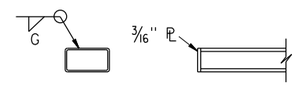

RAIL CAP

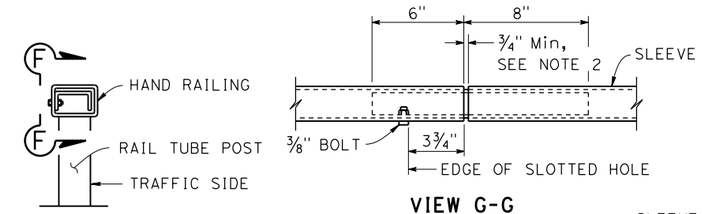

SECTION

VIEW G-G

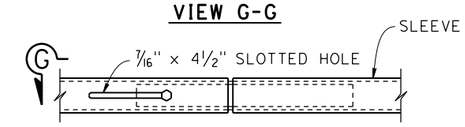

VIEW F-F

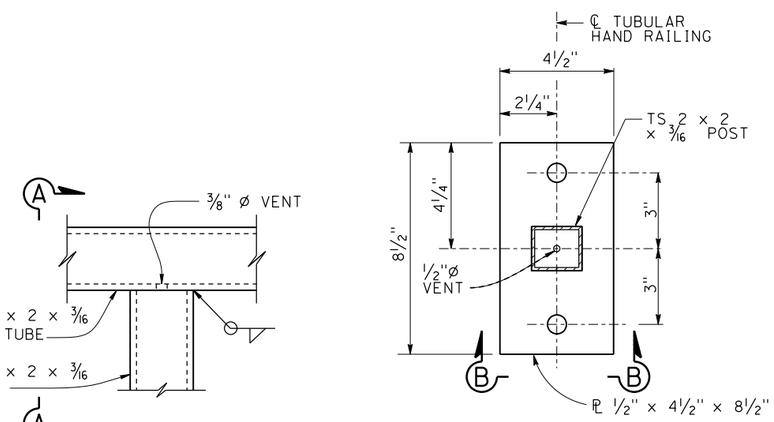

ELEVATION

PLAN

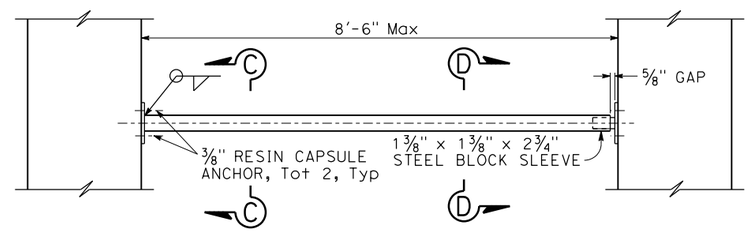

LOWER RAIL DETAIL

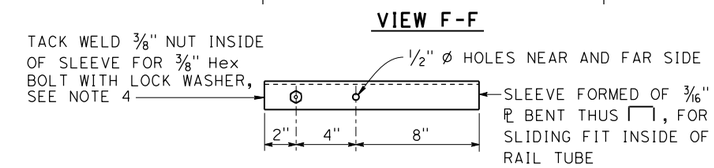

SLEEVE TUBE SPLICE AT EXPANSION JOINT DETAIL

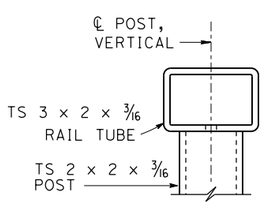

SECTION A-A

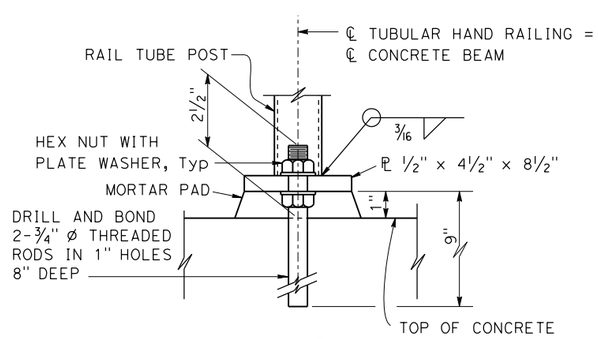

ELEVATION
SECTION B-B

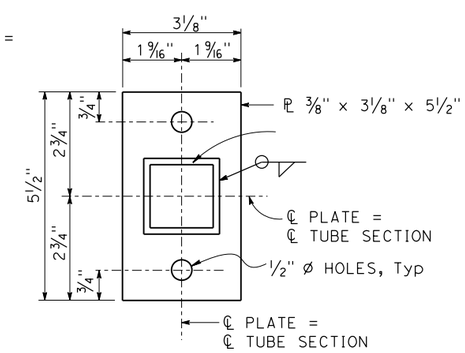

SECTION C-C

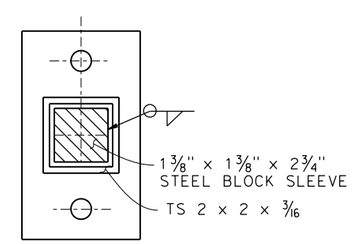

SECTION D-D

See Section C-C for details not shown

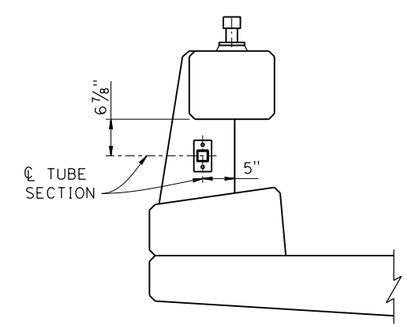

SECTION E-E

TUBULAR RAILING DETAILS

BRIDGE STANDARD DETAILS		
xs16-117-3	July 2020	*The components of the Bridge Standard Details have been prepared under the responsible charge of the Technical Owner, a registered civil engineer in the State of California*
FILE NO.	APPROVAL DATE	

STATE OF CALIFORNIA DEPARTMENT OF TRANSPORTATION

DIVISION OF ENGINEERING SERVICES

BRIDGE No. X
POST MILE X

X

CONCRETE BARRIER TYPE 85

DETAILS No. 3

Refer to: http://www.dot.ca.gov/hq/esc/techpubs/manual/bridgemanuals/bridge-standard-detail-sheets/index.html

DATE PLOTTED => 7/17/2020 TIME PLOTTED => 1:46:08 PM
FILE => ...\16\xs16-117-3.dgn USERNAME => "s136236"

ORIGINAL SCALE IN INCHES FOR REDUCED PLANS 0 1 2 3

UNIT: X
PROJECT NUMBER & PHASE: X
CONTRACT No.: X

DISREGARD PRINTS BEARING EARLIER REVISION DATES

REVISION DATES: 4-13-20 5-11-20 7-9-20 7-15-20

SHEET 3 OF 3