CHAPTER 4

PLANE GRID

CONTENTS

Section		Page
4.1	Introduction	4-2
4.2	Plane Grid Problem (with STRUDL SAVE Command)	4-3
4.3	Revised Plane Grid Problem (with RESTORE Command)	4-22
4.4	**Example Plane Grid Problem . . . . . .**	**4-28**

4.1 Introduction

The material presented in Chapters I and II of this manual are a necessary prerequisite for a reasonable understanding of the material presented in this chapter.

STRUDL treats a plane grid structure as a system of members lying in a plane, rigidly connected at their ends. The individual members must have one of their principal axes in the plane of the grid. The centroidal axis of each member will be the local X-axis. Each member is assumed to have the shear center axis at the longitudinal axis (local X-axis). Bending and torsion occur independently of one another if the shear center is taken as the longitudinal axis. For members symmetrical about both principal axes the shear center is actually located at the centroid of the member.

All forces applied to the grid must be normal to the plane of the structure and all couples must have their moment vectors in the plane of the grid. The significant member displacements are the rotations about the two member axes in the plane of the structure. Shear deformations may also be considered in the analysis of members which have appreciable depth relative to their lengths. A brief review of shearing deformations is presented in Chapter I. Axial deformations are not considered in the analysis, thus in-plane membrane action is not considered.

STRUDL considers only uniform torsion. The effects of restrained torsion or warping are not considered in the analysis. For concrete bridge structures made up of relatively thick members the effects of warping are negligible and STRUDL will provide accurate results. For open, thin-walled cross sections such as ordinary steel rolled beams, the effect of restrained torsion or warping may be important, in which case the STRUDL analysis would not be applicable.

A plane grid structure may be placed on any one of the three global coordinate planes. However, the user can simplify the formulation and visualization of plane grid structures by placing them in the global XZ plane. In this plane the positive local Y axis of the individual members is in the same direction as the positive global Y axis for Beta = 0. Thus the required member properties, for Beta = 0, will be IX, the torsional rigidity, and IZ, the moment of inertia.

The STRUDL grid analysis can be used to approximate the behavior of bridge decks by using an equivalent grid idealization, i.e., by replacing the bridge deck by a frame work of slender beam elements. The longitudinal members being a combination of the composite or non-composite girder and a strip of deck slab interconnected by transverse members to form a grid. The torsional rigidity of the system can be approximated by inducing torsional rigidities into the individual members.

Using the new finite element capability available in STRUDL II, a bridge deck can be analyzed as an idealized continuum using equivalent plate elements interconnected by beam elements. The finite element capability will be discussed in Chapter VII.

4.2 Plane Grid Problem (with SAVE command)

To illustrate the analysis of a plane grid structure and some additional STRUDL commands, consider the grid structure shown in Figure 4.2a. Subjected to the loading conditions shown in Figure 4.2d.

The STRUDL SAVE and RESTORE capabilities are illustrated in this problem.

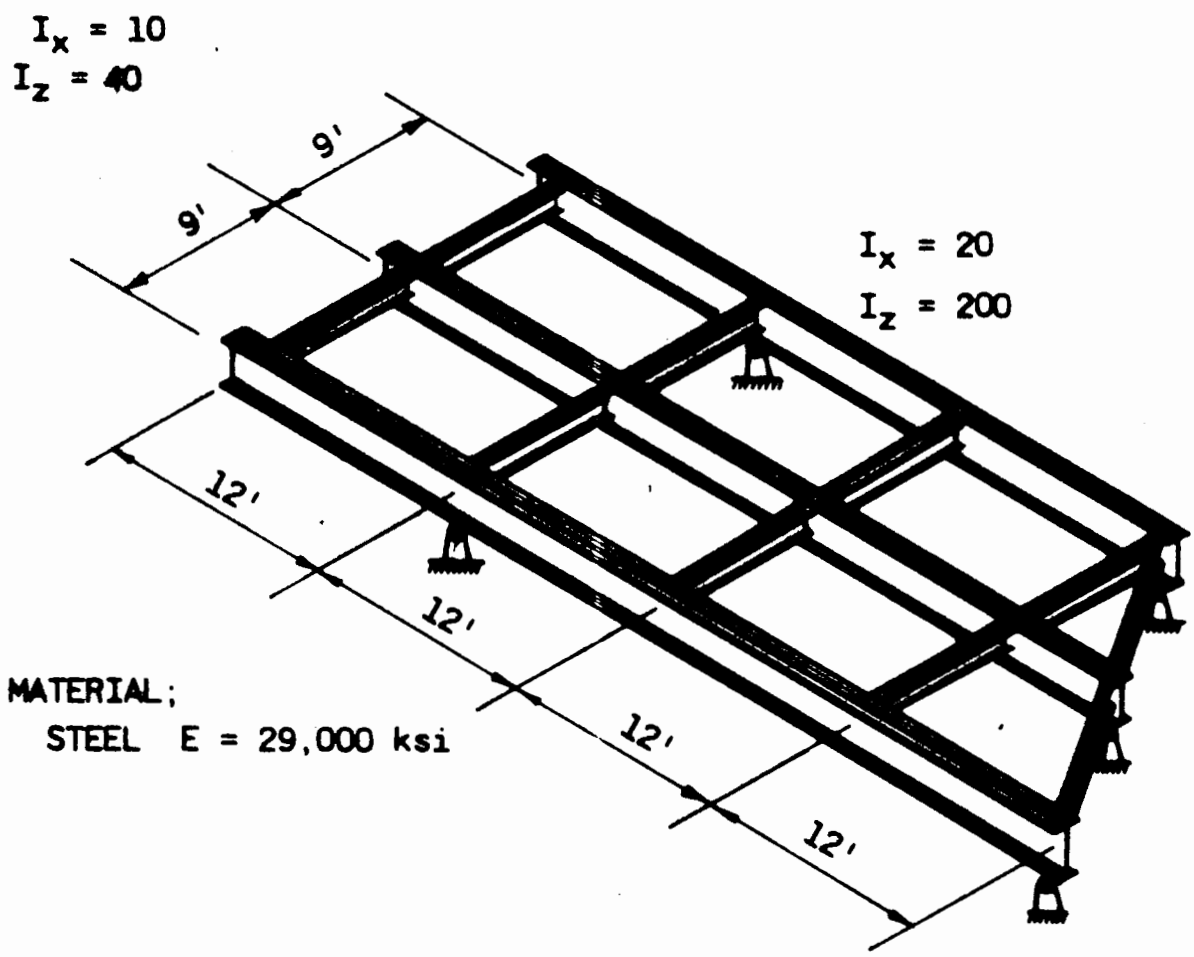

Fig. 4.2 a

The location of the global axes and the joint member numbering scheme is shown in Figure 4.2b.

The plane grid is located in the XZ plane.

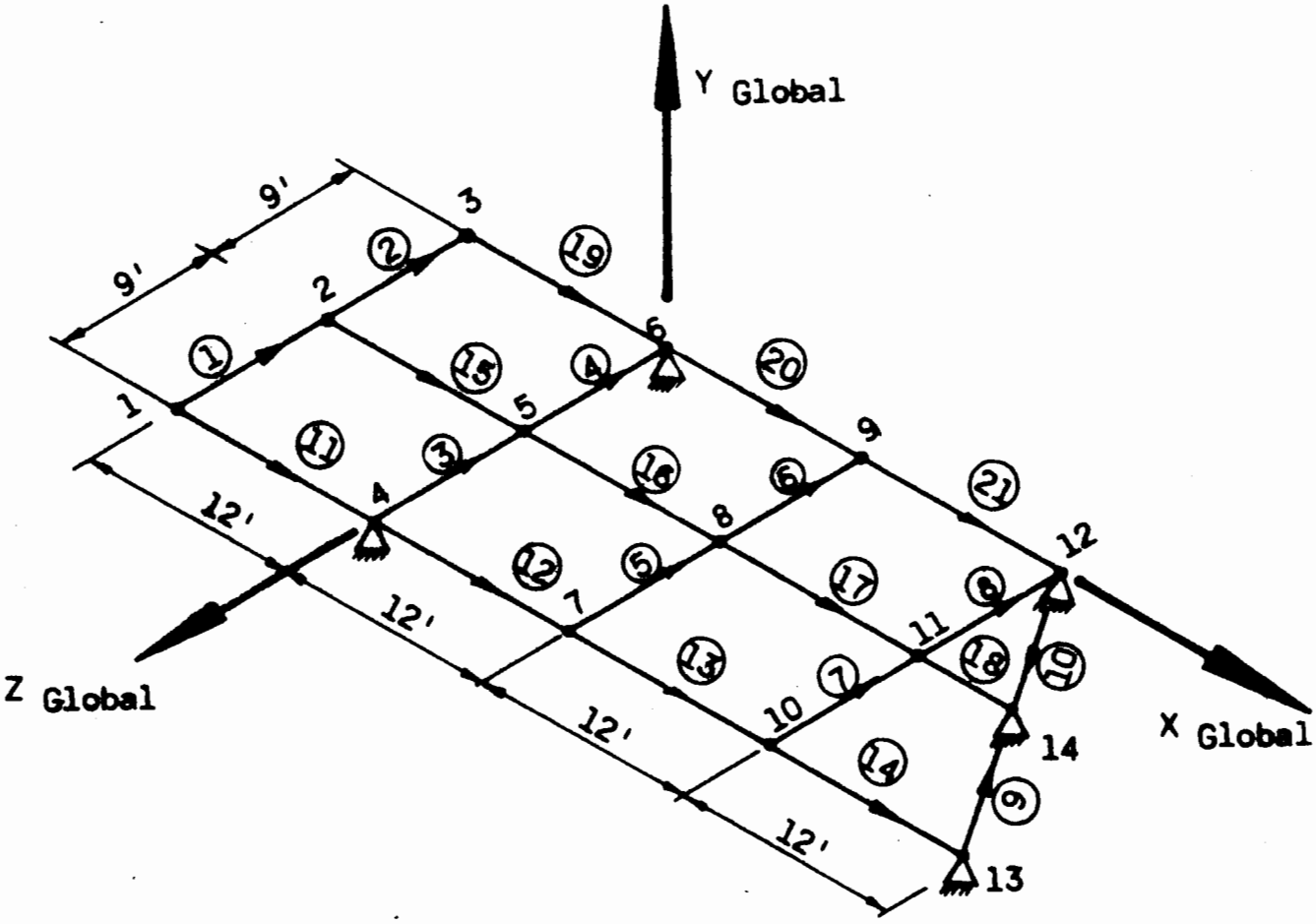

Fig. 4.2b

The basic structure geometry is described in lines 10 thru 410 of the coding below. Note that joints 1 to 3 are located with negative X coordinates. Joint coordinates are located relative to any right-handed orthogonal axes system and may have either a positive or negative value.

STATE OF CALIFORNIA - BUSINESS AND TRANSPORTATION AGENCY - DEPARTMENT OF PUBLIC WORKS - DIVISION OF ADMINISTRATIVE SERVICES

COMPUTER SYSTEMS

ICES

ADDRESS: $ 14N BATCH: 27

SUBSYSTEM NAME: STRUDL 'PROB 4.2' 'PLANE GRID'

SOURCE DIST. UNIT | CHARGE DIST. UNIT | EXPENDITURE AUTHORIZATION | SPECIAL DESIGNATION WHEN APPLICABLE | SEQUENCE: 0001

		SEQUENCE
TYPE	PLANE GRID XZ	20
UNITS	FEET	30
JOINT	COORDINATES	40
	1 -12. Z 18.	50
	2 -12. Z 9.	60
	3 -12.	70
	4 Z 18. SUPPORT	80
	5 Z 9.	90
	6 SUPPORT	100
	7 12. Z 18.	110
	8 12. Z 9.	120
	9 12.	130
	10 24. Z 18.	140
	11 24. Z 9.	150
	12 24. SUPPORT	160
	13 36. Z 18. SUPPORT	170
	14 30. Z 9. SUPPORT	180
JOINTS	4 6 12 13 14 RELEASE MOMENTS X Z	190
MEMBER	INCIDENCES	200
	1 1 2	210
	2 2 3	220
	3 4 5	230
	4 5 6	240
	5 7 8	250
	6 8 9	260
	7 10 11	270
	8 11 12	280
	9 13 14	290
	10 12 14	300
	11 1 4	310
	12 4 7	320
	13 7 10	330
	14 10 13	340
	15 2 5	350
	16 5 8	360
	17 8 11	370
	18 11 14	380
	19 3 6	390
	20 6 9	400
	21 9 12	410
MEMBERS	3 THRU 8 RELEASE START MOMENT Z END MOMENT Z	420

Line 0420 illustrates the use of the individual form of the MEMBER RELEASE statement. The MEMBER RELEASE statement is used to define the start and end releases of any member. (JOINT RELEASES on the other hand apply only to support joints.)

In a PLANE GRID structure we must consider the effect of our connections upon the end restraint of the members. For the beam connection in Figure 4.2c the support angles affect the end fixity of the beam. The possible components for release from the full fixity are: Force Y, Moment X and Moment Z.

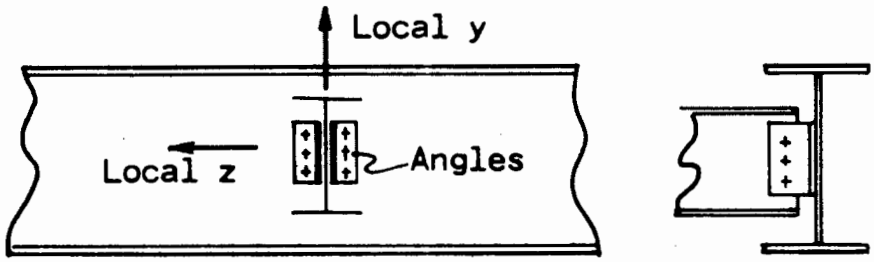

Fig. 4.2c

Members 1-8 End Connection (Problems 4.2 & 4.3)

If we consider the angles to be so small that they would not offer any torsional restraint (Moment X) or bending restraint (Moment Z) the appropriate releases would be Moment X and Moment Z. Moment X (Torsion) should not be released at both ends of a member because it would be free to spin on its X-axis yielding an unstable member.

For this problem we will assume the angles to be capable of transmitting shear and torsion. The release to be specified will be Moment Z at both ends of members 3 to 8 as coded on line 420.

The commands shown below on lines 430 to 470 describe the elastic properties and the member properties of the structure.

```
UNITS KIPS INCHES                                  430
CONSTANTS E 29000. ALL                             440
MEMBER PROPERTIES PRISMATIC                        450
    1 THRU 10 IX 10. IZ 40.0                       460
    11 THRU 21 IX 20. IZ 200.0                     470
```

```
UNITS FEET                                                    480
LOADING 'ONE'                                                 490
    JOINTS 1 3 LOAD FORCE Y -50                               500
    MEMBERS 1 THRU 21 LOAD FORCE Y UNIFORM -1.5               510
LOADING 'TWO'                                                 511
    JOINTS 7 TO 11 LOAD FORCE Y -50                           512
    MEMBERS 1 TO 21 LOAD FORCE Y UNIF -1.5                    513
```

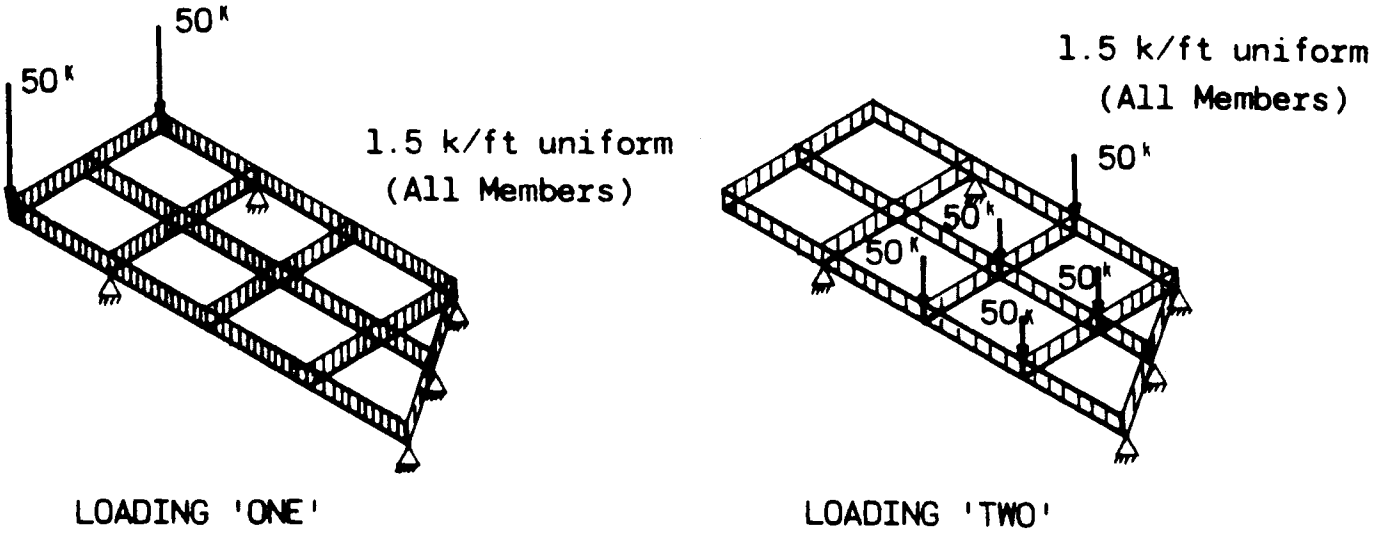

Fig. 4.2d

The two loading conditions shown in Figure 4.2d are coded on lines 490 thru 513. The structure and the two loading conditions are now completely described.

The commands appearing on lines 520 to 570 instruct the computer to print the problem description as interpreted by STRUDL, perform an analysis and printout the resulting forces, reactions and displacements.

```
LOADING LIST ALL                                              520
UNITS INCHES                                                  530
PRINT DATA                                                    540
STIFFNESS ANALYSIS                                            550
UNITS FEET KIPS                                               560
LIST FORCES REACTIONS                                         570
SAVE 'PROB 4.2'                                               600
```

The last command, SAVE 'PROB. 4.2', given on line 600 instructs the computer to save the problem on secondary storage. The problem will be saved with the current status of the problem for a period of time requested in the JOB CONTROL LANGUAGE. The user should contact a STRUDL coordinator prior to submitting a problem to be saved for assistance in this area. In Problem 4.3 this problem is restored, modified, reanalyzed and saved again.

```
STRUDL  'PROB 4.2' 'PLANE GRID'                                  $ 14N 27    0010

          ***********************************************
          *                                             *
          *     ICES STRUDL II       VERSION 1 MOD 1    *
          *       THE STRUCTURAL DESIGN LANGUAGE        *
          *    MASSACHUSETTS INSTITUTE OF TECHNOLOGY    *
          *              STATE OF CALIFORNIA            *
          *     BRIDGE DEPARTMENT DIVISION OF HWYS.     *
          *    SPECIAL STUDIES SECTION  PH. 445-6519    *
          *     NOVEMBER 1969  INSTALLED APRIL 1970     *
          *           21:45:01        8/31/70           *
          *                                             *
          ***********************************************

TYPE PLANE GRID XZ                                               $ 14N 27    0020

UNITS FEET                                                       $ 14N 27    0030

JOINT COORDINATES                                                $ 14N 27    0040

     1 -12. Z 18.                                                $ 14N 27    0050

     2 -12. Z 9.                                                 $ 14N 27    0060

     3 -12.                                                      $ 14N 27    0070

     4 Z 18. SUPPORT                                             $ 14N 27    0080

     5 Z 9.                                                      $ 14N 27    0090

     6 SUPPORT                                                   $ 14N 27    0100

     7 12. Z 18.                                                 $ 14N 27    0110

     8 12. Z 9.                                                  $ 14N 27    0120

     9 12.                                                       $ 14N 27    0130

     10 24. Z 18.                                                $ 14N 27    0140

     11 24. Z 9.                                                 $ 14N 27    0150

     12 24. SUPPORT                                              $ 14N 27    0160

     13 36. Z 18. SUPPORT                                        $ 14N 27    0170

     14 30. Z 9. SUPPORT                                         $ 14N 27    0180

JOINTS 4 6 12 13 14 RELEASE MOMENTS X Z                          $ 14N 27    0190

MEMBER INCIDENCES                                                $ 14N 27    0200

     1 1 2                                                       $ 14N 27    0210

     2 2 3                                                       $ 14N 27    0220

     3 4 5                                                       $ 14N 27    0230

     4 5 6                                                       $ 14N 27    0240

     5 7 8                                                       $ 14N 27    0250
```

```
     6 8 9                                                    $ 14N 27   0260
     7 10 11                                                  $ 14N 27   0270
     8 11 12                                                  $ 14N 27   0280
     9 13 14                                                  $ 14N 27   0290
     10 12 14                                                 $ 14N 27   0300
     11 1 4                                                   $ 14N 27   0310
     12 4 7                                                   $ 14N 27   0320
     13 7 10                                                  $ 14N 27   0330
     14 10 13                                                 $ 14N 27   0340
     15 2 5                                                   $ 14N 27   0350
     16 5 8                                                   $ 14N 27   0360
     17 8 11                                                  $ 14N 27   0370
     18 11 14                                                 $ 14N 27   0380
     19 3 6                                                   $ 14N 27   0390
     20 6 9                                                   $ 14N 27   0400
     21 9 12                                                  $ 14N 27   0410
MEMBERS 3 THRU 8 RELEASE START MOMENT Z END MOMENT Z          $ 14N 27   0420
UNITS KIPS INCHES                                             $ 14N 27   0430
CONSTANTS E 29000. ALL                                        $ 14N 27   0440
MEMBER PROPERTIES PRISMATIC                                   $ 14N 27   0450
     1 THRU 10 IX 10. IZ 40.0                                 $ 14N 27   0460
     11 THRU 21 IX 20. IZ 200.0                               $ 14N 27   0470
UNITS FEET                                                    $ 14N 27   0480
LOADING 'ONE'                                                 $ 14N 27   0490
     JOINTS 1 3 LOAD FORCE Y -50.                             $ 14N 27   0500
     MEMBERS 1 THRU 21 LOAD FORCE Y UNIFORM -1.5              $ 14N 27   0510
LOADING  'TWO'                                                $ 14N 27   0511
     JOINTS 7 TO 11 LOAD FORCE Y -50.                         $ 14N 27   0512
     MEMBERS 1 TO 21 LOAD FORCE Y UNIF -1.5                   $ 14N 27   0513
LOADING LIST ALL                                              $ 14N 27   0520
UNITS INCHES                                                  $ 14N 27   0530
PRINT DATA                                                    $ 14N 27   0540
```

```
****************************************
*  PROBLEM DATA FROM INTERNAL STORAGE  *
****************************************
```

JOB ID - PROB 4.2 JOB TITLE - PLANE GRID

ACTIVE UNITS -	LENGTH	WEIGHT	ANGLE	TEMPERATURE	TIME
	INCH	KIP	RAD	DEGF	SEC

********** STRUCTURAL DATA **********

ACTIVE STRUCTURE TYPE - PLANE GRID

ACTIVE COORDINATE AXES X Z

JOINT COORDINATES--------					STATUS---/
JOINT	X	Y	Z	CONDITION	
1	-144.000	0.0	216.000		ACTIVE
2	-144.000	0.0	108.000		ACTIVE
3	-144.000	0.0	0.0		ACTIVE
4	0.0	0.0	216.000	SUPPORT	ACTIVE
5	0.0	0.0	108.000		ACTIVE
6	0.0	0.0	0.0	SUPPORT	ACTIVE
7	144.000	0.0	216.000		ACTIVE
8	144.000	0.0	108.000		ACTIVE
9	144.000	0.0	0.0		ACTIVE
10	288.000	0.0	216.000		ACTIVE
11	288.000	0.0	108.000		ACTIVE
12	288.000	0.0	0.0	SUPPORT	ACTIVE
13	432.000	0.0	216.000	SUPPORT	ACTIVE
14	360.000	0.0	108.000	SUPPORT	ACTIVE

JOINT RELEASES----------/ELASTIC SUPPORT RELEASES----------/												
JOINT	FORCE	MOMENT	THETA 1	THETA 2	THETA 3	KFX	KFY	KFZ	KMX	KMY	KMZ
4	X	Z	0.0	0.0	0.0	0.0	0.0	0.0	0.0	0.0	0.0
6	X	Z	0.0	0.0	0.0	0.0	0.0	0.0	0.0	0.0	0.0
12	X	Z	0.0	0.0	0.0	0.0	0.0	0.0	0.0	0.0	0.0
13	X	Z	0.0	0.0	0.0	0.0	0.0	0.0	0.0	0.0	0.0
14	X	Z	0.0	0.0	0.0	0.0	0.0	0.0	0.0	0.0	0.0

MEMBER INCIDENCES--------/			LENGTH------/	RELEASES----------/				STATUS--/
				START		END		
MEMBER	START	END	LOCAL COORD.	FORCE	MOMENT	FORCE	MOMENT	
1	1	2	108.000					ACTIVE
2	2	3	108.000					ACTIVE
3	4	5	108.000		Z		Z	ACTIVE
4	5	6	108.000		Z		Z	ACTIVE
5	7	8	108.000		Z		Z	ACTIVE
6	8	9	108.000		Z		Z	ACTIVE
7	10	11	108.000		Z		Z	ACTIVE
8	11	12	108.000		Z		Z	ACTIVE
9	13	14	129.800					ACTIVE
10	12	14	129.800					ACTIVE
11	1	4	144.000					ACTIVE
12	4	7	144.000					ACTIVE
13	7	10	144.000					ACTIVE
14	10	13	144.000					ACTIVE
15	2	5	144.000					ACTIVE
16	5	8	144.000					ACTIVE
17	8	11	144.000					ACTIVE
18	11	14	72.000					ACTIVE
19	3	6	144.000					ACTIVE
20	6	9	144.000					ACTIVE
21	9	12	144.000					ACTIVE

********** LOADING DATA **********

LOADING - ONE STATUS - ACTIVE

MEMBER AND ELEMENT LOADS----------/

MEMBER/ELEMENT											
1	UNIFORM	LOAD	FORCE	Y	FR	W	-0.125	LA	0.0	LB	1.000
2	UNIFORM	LOAD	FORCE	Y	FR	W	-0.125	LA	0.0	LB	1.000
3	UNIFORM	LOAD	FORCE	Y	FR	W	-0.125	LA	0.0	LB	1.000
4	UNIFORM	LOAD	FORCE	Y	FR	W	-0.125	LA	0.0	LB	1.000
5	UNIFORM	LOAD	FORCE	Y	FR	W	-0.125	LA	0.0	LB	1.000
6	UNIFORM	LOAD	FORCE	Y	FR	W	-0.125	LA	0.0	LB	1.000
7	UNIFORM	LOAD	FORCE	Y	FR	W	-0.125	LA	0.0	LB	1.000
8	UNIFORM	LOAD	FORCE	Y	FR	W	-0.125	LA	0.0	LB	1.000
9	UNIFORM	LOAD	FORCE	Y	FR	W	-0.125	LA	0.0	LB	1.000
10	UNIFORM	LOAD	FORCE	Y	FR	W	-0.125	LA	0.0	LB	1.000
11	UNIFORM	LOAD	FORCE	Y	FR	W	-0.125	LA	0.0	LB	1.000
12	UNIFORM	LOAD	FORCE	Y	FR	W	-0.125	LA	0.0	LB	1.000
13	UNIFORM	LOAD	FORCE	Y	FR	W	-0.125	LA	0.0	LB	1.000
14	UNIFORM	LOAD	FORCE	Y	FR	W	-0.125	LA	0.0	LB	1.000
15	UNIFORM	LOAD	FORCE	Y	FR	W	-0.125	LA	0.0	LB	1.000
16	UNIFORM	LOAD	FORCE	Y	FR	W	-0.125	LA	0.0	LB	1.000
17	UNIFORM	LOAD	FORCE	Y	FR	W	-0.125	LA	0.0	LB	1.000
18	UNIFORM	LOAD	FORCE	Y	FR	W	-0.125	LA	0.0	LB	1.000
19	UNIFORM	LOAD	FORCE	Y	FR	W	-0.125	LA	0.0	LB	1.000
20	UNIFORM	LOAD	FORCE	Y	FR	W	-0.125	LA	0.0	LB	1.000
21	UNIFORM	LOAD	FORCE	Y	FR	W	-0.125	LA	0.0	LB	1.000

JOINT LOADS----------/ ----------/

JOINT	STEP	FORCE X	Y	Z	MOMENT X	Y	Z
1		0.0	-50.000	0.0	0.0	0.0	0.0
3		0.0	-50.000	0.0	0.0	0.0	0.0

JOINT DISPLACEMENTS----------/ ----------/

JOINT	STEP	DISP. X	Y	Z	ROT.	X	Y	Z

JOINT FORCE ASSUMPTIONS ----------/

JOINT	THETA 1	2	3	FORCE X	Y	Z	MOMENT X	Y	Z

NO ASSUMPTIONS GIVEN FOR THIS LOADING

MEMBER FORCE ASSUMPTIONS ----------/ ----------/

MEMBER	COMPONENT	DISTANCE	VALUE	COMPONENT	DISTANCE	VALUE

NO ASSUMPTIONS GIVEN FOR THIS LOADING

LOADING - TWO STATUS - ACTIVE

MEMBER AND ELEMENT LOADS----------/

MEMBER/ELEMENT											
1	UNIFORM	LOAD	FORCE	Y	FR	W	-0.125	LA	0.0	LB	1.000
2	UNIFORM	LOAD	FORCE	Y	FR	W	-0.125	LA	0.0	LB	1.000
3	UNIFORM	LOAD	FORCE	Y	FR	W	-0.125	LA	0.0	LB	1.000
4	UNIFORM	LOAD	FORCE	Y	FR	W	-0.125	LA	0.0	LB	1.000
5	UNIFORM	LOAD	FORCE	Y	FR	W	-0.125	LA	0.0	LB	1.000
6	UNIFORM	LOAD	FORCE	Y	FR	W	-0.125	LA	0.0	LB	1.000
7	UNIFORM	LOAD	FORCE	Y	FR	W	-0.125	LA	0.0	LB	1.000
8	UNIFORM	LOAD	FORCE	Y	FR	W	-0.125	LA	0.0	LB	1.000
9	UNIFORM	LOAD	FORCE	Y	FR	W	-0.125	LA	0.0	LB	1.000
10	UNIFORM	LOAD	FORCE	Y	FR	W	-0.125	LA	0.0	LB	1.000
11	UNIFORM	LOAD	FORCE	Y	FR	W	-0.125	LA	0.0	LB	1.000
12	UNIFORM	LOAD	FORCE	Y	FR	W	-0.125	LA	0.0	LB	1.000
13	UNIFORM	LOAD	FORCE	Y	FR	W	-0.125	LA	0.0	LB	1.000
14	UNIFORM	LOAD	FORCE	Y	FR	W	-0.125	LA	0.0	LB	1.000
15	UNIFORM	LOAD	FORCE	Y	FR	W	-0.125	LA	0.0	LB	1.000
16	UNIFORM	LOAD	FORCE	Y	FR	W	-0.125	LA	0.0	LB	1.000
17	UNIFORM	LOAD	FORCE	Y	FR	W	-0.125	LA	0.0	LB	1.000
18	UNIFORM	LOAD	FORCE	Y	FR	W	-0.125	LA	0.0	LB	1.000
19	UNIFORM	LOAD	FORCE	Y	FR	W	-0.125	LA	0.0	LB	1.000
20	UNIFORM	LOAD	FORCE	Y	FR	W	-0.125	LA	0.0	LB	1.000
21	UNIFORM	LOAD	FORCE	Y	FR	W	-0.125	LA	0.0	LB	1.000

JOINT LOADS----------/ ----------/

JOINT	STEP	FORCE X	Y	Z	MOMENT X	Y	Z
7		0.0	-50.000	0.0	0.0	0.0	0.0
8		0.0	-50.000	0.0	0.0	0.0	0.0
9		0.0	-50.000	0.0	0.0	0.0	0.0
10		0.0	-50.000	0.0	0.0	0.0	0.0
11		0.0	-50.000	0.0	0.0	0.0	0.0

JOINT DISPLACEMENTS----------/ ----------/

JOINT	STEP	DISP. X	Y	Z	ROT.	X	Y	Z

JOINT FORCE ASSUMPTIONS ----------/

JOINT	THETA 1	2	3	FORCE X	Y	Z	MOMENT X	Y	Z

NO ASSUMPTIONS GIVEN FOR THIS LOADING

MEMBER FORCE ASSUMPTIONS ----------/ ----------/

MEMBER	COMPONENT	DISTANCE	VALUE	COMPONENT	DISTANCE	VALUE

NO ASSUMPTIONS GIVEN FOR THIS LOADING

****
* END OF DATA FROM INTERNAL STORAGE *
****

MEMBER PROPERTIES----------/

MEMBER/SEG	TYPE	SEG.L	COMP	AX/YD	AY/ZD	AZ/YC	IX/ZC	IY/EY	IZ/EZ	SY	SZ
1	PRISMATIC			0.0	0.0	0.0	10.000	0.0	40.000	0.0	0.0
				0.0	0.0	0.0	0.0	0.0	0.0		
2	PRISMATIC			0.0	0.0	0.0	10.000	0.0	40.000	0.0	0.0
				0.0	0.0	0.0	0.0	0.0	0.0		
3	PRISMATIC			0.0	0.0	0.0	10.000	0.0	40.000	0.0	0.0
				0.0	0.0	0.0	0.0	0.0	0.0		
4	PRISMATIC			0.0	0.0	0.0	10.000	0.0	40.000	0.0	0.0
				0.0	0.0	0.0	0.0	0.0	0.0		
5	PRISMATIC			0.0	0.0	0.0	10.000	0.0	40.000	0.0	0.0
				0.0	0.0	0.0	0.0	0.0	0.0		
6	PRISMATIC			0.0	0.0	0.0	10.000	0.0	40.000	0.0	0.0
				0.0	0.0	0.0	0.0	0.0	0.0		
7	PRISMATIC			0.0	0.0	0.0	10.000	0.0	40.000	0.0	0.0
				0.0	0.0	0.0	0.0	0.0	0.0		
8	PRISMATIC			0.0	0.0	0.0	10.000	0.0	40.000	0.0	0.0
				0.0	0.0	0.0	0.0	0.0	0.0		
9	PRISMATIC			0.0	0.0	0.0	10.000	0.0	40.000	0.0	0.0
				0.0	0.0	0.0	0.0	0.0	0.0		
10	PRISMATIC			0.0	0.0	0.0	10.000	0.0	40.000	0.0	0.0
				0.0	0.0	0.0	0.0	0.0	0.0		
11	PRISMATIC			0.0	0.0	0.0	20.000	0.0	200.000	0.0	0.0
				0.0	0.0	0.0	0.0	0.0	0.0		
12	PRISMATIC			0.0	0.0	0.0	20.000	0.0	200.000	0.0	0.0
				0.0	0.0	0.0	0.0	0.0	0.0		
13	PRISMATIC			0.0	0.0	0.0	20.000	0.0	200.000	0.0	0.0
				0.0	0.0	0.0	0.0	0.0	0.0		
14	PRISMATIC			0.0	0.0	0.0	20.000	0.0	200.000	0.0	0.0
				0.0	0.0	0.0	0.0	0.0	0.0		
15	PRISMATIC			0.0	0.0	0.0	20.000	0.0	200.000	0.0	0.0
				0.0	0.0	0.0	0.0	0.0	0.0		
16	PRISMATIC			0.0	0.0	0.0	20.000	0.0	200.000	0.0	0.0
				0.0	0.0	0.0	0.0	0.0	0.0		
17	PRISMATIC			0.0	0.0	0.0	20.000	0.0	200.000	0.0	0.0
				0.0	0.0	0.0	0.0	0.0	0.0		
18	PRISMATIC			0.0	0.0	0.0	20.000	0.0	200.000	0.0	0.0
				0.0	0.0	0.0	0.0	0.0	0.0		
19	PRISMATIC			0.0	0.0	0.0	20.000	0.0	200.000	0.0	0.0
				0.0	0.0	0.0	0.0	0.0	0.0		
20	PRISMATIC			0.0	0.0	0.0	20.000	0.0	200.000	0.0	0.0
				0.0	0.0	0.0	0.0	0.0	0.0		
21	PRISMATIC			0.0	0.0	0.0	20.000	0.0	200.000	0.0	0.0
				0.0	0.0	0.0	0.0	0.0	0.0		

MEMBER CONSTANTS----------/

CONSTANT	STANDARD VALUE	DOMAIN,	VALUE	MEMBER LIST
E	28999.996094	ALL		
G	0.0	ALL		
DENSITY	0.001000	ALL		
CTE	1.000000	ALL		
BETA	0.0	ALL		
POISSON	0.0	ALL		

```
STIFFNESS ANALYSIS                                  $ 14N 27    0550
UNITS FEET KIPS                                     $ 14N 27    0560
LIST FORCES REACTIONS DISPLACEMENTS                 $ 14N 27    0570
```

```
****************************
*RESULTS OF LATEST ANALYSES*
****************************
```

PROBLEM - PROB 4.2 TITLE - PLANE GRID

ACTIVE UNITS FEET KIP RAD DEGF SEC

ACTIVE STRUCTURE TYPE PLANE GRID

ACTIVE COORDINATE AXES X Z

LOADING - ONE

MEMBER FORCES

MEMBER	JOINT	FORCE: AXIAL	FORCE: SHEAR Y	FORCE: SHEAR Z	MOMENT: TORSIONAL	MOMENT: BENDING Y	MOMENT: BENDING Z
1	1		37.3135681		-37.1775055		3.4901025
1	2		-23.8135834		37.1775055		271.5917569
2	2		-23.8825684		33.7784119		-266.6418457
2	3		37.3825531		-33.7784119		-9.0511017
3	4		6.7499990		-18.4595032		0.0
3	5		6.7499914		18.4595032		0.0
4	5		6.7499990		14.9587469		0.0
4	6		6.7499914		-14.9587469		0.0
5	7		6.7499990		12.4653463		0.0
5	8		6.7499914		-12.4653463		0.0
6	8		6.7499990		-15.4153252		0.0
6	9		6.7499914		15.4153252		0.0
7	10		6.7499990		27.3635406		0.0
7	11		6.7499914		-27.3635406		0.0
8	11		6.7499990		-28.3276825		0.0
9	12		6.7499914		28.3276825		0.0
9	13		5.0617847		27.4285126		14.1031113
9	14		11.1631861		-27.4285126		-47.1015220
10	12		4.9927883		-27.7055969		-29.3484650
10	14		11.2321825		27.7055969		-4.3962469
11	1		-87.3135529		-3.4801025		-37.1775055
11	4		105.3135529		3.4801025		-1118.5852051
12	4		66.2666168		-3.4801025		1100.1257224
12	7		-48.2666473		3.4801025		-412.9257812
13	7		41.5166473		-3.4801025		425.3911133
13	10		-23.5166626		3.4801025		-35.1914578
14	10		16.7666626		-3.4801025		62.5550537
14	13		1.2333269		3.4801025		30.6448575
15	2		47.6961517		-4.9500523		70.9559326
15	5		-29.6961517		4.9500523		393.3977051
16	5		16.1961670		-4.9500523		-359.9794922
16	8		1.8038225		4.9500523		446.3334961
17	8		-15.3038149		-4.9500523		-474.2141113
17	11		33.3038025		4.9500523		182.5684509
18	11		-46.8038025		-4.9500523		-238.2557809
18	14		55.8037872		4.9500523		-89.5629883
19	3		-87.3825531		9.0511017		-33.7784119
19	6		105.3825531		-9.0511017		-1122.8120117
20	6		70.9969940		9.0511017		1107.8532715
20	9		-52.9970245		-9.0511017		-363.8851602
21	9		46.2470245		9.0511017		379.3044434
21	12		-28.2470398		-9.0511017		67.6597443

RESULTANT JOINT LOADS - SUPPORTS

JOINT	FORCE: X FORCE	FORCE: Y FORCE	FORCE: Z FORCE	MOMENT: X MOMENT	MOMENT: Y MOMENT	MOMENT: Z MOMENT
4		178.3301697		-0.0000000		-0.0000000
6		183.1295471		-0.0000000		0.0
12		-16.5042415		-0.0000013		0.0000016
13		6.2951126		0.0000013		-0.0000015
14		78.1991119		0.0000000		0.0000000

RESULTANT JOINT DISPLACEMENTS - SUPPORTS

JOINT	DISPLACEMENT: X DISP.	DISPLACEMENT: Y DISP.	DISPLACEMENT: Z DISP.	ROTATION: X ROT.	ROTATION: Y ROT.	ROTATION: Z ROT.
4		0.0		-0.1080415		0.2245684
6		0.0		0.1149153		0.1854564
12		0.0		-0.0199150		-0.0694813
13		0.0		-0.0302792		-0.0581003
14		0.0		0.1561654		0.2602428

RESULTANT JOINT DISPLACEMENTS - FREE JOINTS

JOINT	DISPLACEMENT: X DISP.	DISPLACEMENT: Y DISP.	DISPLACEMENT: Z DISP.	ROTATION: X ROT.	ROTATION: Y ROT.	ROTATION: Z ROT.
1		-3.9735346		-0.1339622		0.3802981
2		-4.6848040		0.0271227		-0.0350644
3		-3.5112543		0.1823304		0.3423222
5		-4.9235497		0.0639920		0.0183311
7		1.1699038		-0.0821207		0.0045386
8		-3.9764519		0.1008614		0.1438067
9		0.7205704		0.0475001		-0.0284197
10		0.7286263		-0.0562000		-0.0587096
11		-1.5446768		0.1377308		0.2470074

LOADING - TWO

MEMBER FORCES

MEMBER	JOINT	FORCE AXIAL	FORCE SHEAR Y	FORCE SHEAR Z	MOMENT TORSIONAL	MOMENT BENDING Y	MOMENT BENDING Z
1	1		52.6235809		-27.3325195		14.0877104
1	2		-39.1235962		27.3325195		398.7744141
2	2		-36.6584015		37.3852844		-385.8374023
2	3		50.1583862		-37.3852844		-4.8379517
3	4		6.7499990		-9.2423000		0.0
3	5		6.7499914		9.2423000		0.0
4	5		6.7499990		19.9575653		0.0
4	6		6.7499914		-19.9575653		0.0
5	7		6.7499990		18.6535645		0.0
5	8		6.7499914		-18.6535645		0.0
6	8		6.7499990		-11.0487108		0.0
6	9		6.7499914		11.0487108		0.0
7	10		6.7499990		27.3307343		0.0
7	11		6.7499914		-27.3307343		0.0
8	11		6.7499990		-31.5356423		0.0
8	12		6.7499914		31.5396423		0.0
9	13		2.6890841		21.0722158		-2.8831692
9	14		13.5358896		-21.0722158		-55.7799377
10	12		5.1542730		-33.7394714		-28.3074646
10	14		11.0706578		33.7394714		-3.6905251
11	1		-52.6235809		-14.0877104		-27.3325195
11	4		70.6235504		14.0877104		-712.1503906
12	4		104.9951172		-14.0877104		702.9079590
12	7		-86.9951172		14.0877104		449.0334473
13	7		30.2451782		-14.0877104		-430.3798828
13	10		-12.2451859		14.0877104		685.3220215
14	10		-44.5047913		-14.0877104		-657.9914551
14	13		62.5047913		14.0877104		15.9338560
15	2		75.7819824		-12.9369450		64.7178040
15	5		-57.7819977		12.9369450		736.6660156
16	5		44.2820129		-12.9369450		-707.4660645
16	8		-26.2820129		12.9369450		1130.8503418
17	8		-37.2179565		-12.9369450		-1160.5524902
17	11		55.2179565		12.9369450		605.5370117
18	11		-118.7179260		-12.9369450		-664.8073730
18	14		127.7179260		12.9369450		-74.5001068
19	3		-50.1583862		4.8379517		-37.3852844
19	6		68.1583557		-4.8379517		-672.5153809
20	6		77.1633606		4.8379517		652.5578613
20	9		-59.1633911		-4.8379517		165.4026337
21	9		2.4134026		4.8379517		-154.3538818
21	12		15.5865879		-4.8379517		75.3147583

RESULTANT JOINT LOADS - SUPPORTS

JOINT	FORCE X FORCE	FORCE Y FORCE	FORCE Z FORCE	MOMENT X MOMENT	MOMENT Y MOMENT	MOMENT Z MOMENT
4		192.3687286		0.0		0.0000000
6		152.0717216		0.0000000		0.0000000
12		27.4908600		-0.0000013		0.0000015
13		65.1938782		0.0000023		-0.0000027
14		152.3244781		-0.0000000		0.0000000

RESULTANT JOINT DISPLACEMENTS - SUPPORTS

JOINT	DISPLACEMENT X DISP.	DISPLACEMENT Y DISP.	DISPLACEMENT Z DISP.	ROTATION X ROT.	ROTATION Y ROT.	ROTATION Z ROT.
4		0.0		-0.1965826		-0.0700316
6		0.0		0.1128063		0.0496839
12		0.0		0.0407375		0.0220528
13		0.0		0.1182050		0.1748309
14		0.0		0.2619473		0.4190649

RESULTANT JOINT DISPLACEMENTS - FREE JOINTS

JOINT	DISPLACEMENT X DISP.	DISPLACEMENT Y DISP.	DISPLACEMENT Z DISP.	ROTATION X ROT.	ROTATION Y ROT.	ROTATION Z ROT.
1		0.0401550		-0.3015118		0.0266199
2		-2.0014715		-0.0753056		-0.2787503
3		-1.3432045		0.1488407		0.1389336
5		-4.9524727		0.0210523		-0.1732904
7		-1.3783112		-0.0916533		-0.1024873
8		-5.4829463		0.1174103		0.1059181
9		-0.0507286		0.0767719		-0.0175227
10		-1.6547318		0.0132758		0.0690765
11		-2.4355392		0.2137682		0.3744269

```
SAVE 'PROB 4.2'                                  $ 14N 27    0600
FINISH                                                       0000

GOOD-BYE
```

Results

The interpretation of output results for several members of the plane grid structure analyzed are illustrated using the free body diagrams on the following pages. The torsional couples and bending moments are drawn with double headed arrows in the direction of the local coordinate axes, the sense being determined by the sign of the reported force. The actual moments and torques act in planes normal to the arrows, their direction being determined by the right hand screw rule. Following is a statement of the rule:

> Point the right hand thumb in the direction of the moment or torque vector. Fingers now point in the direction of the actual moment or torque.

To illustrate the application of the right hand rule, consider the free body diagram of member 11 shown in Figure 4.2e below.

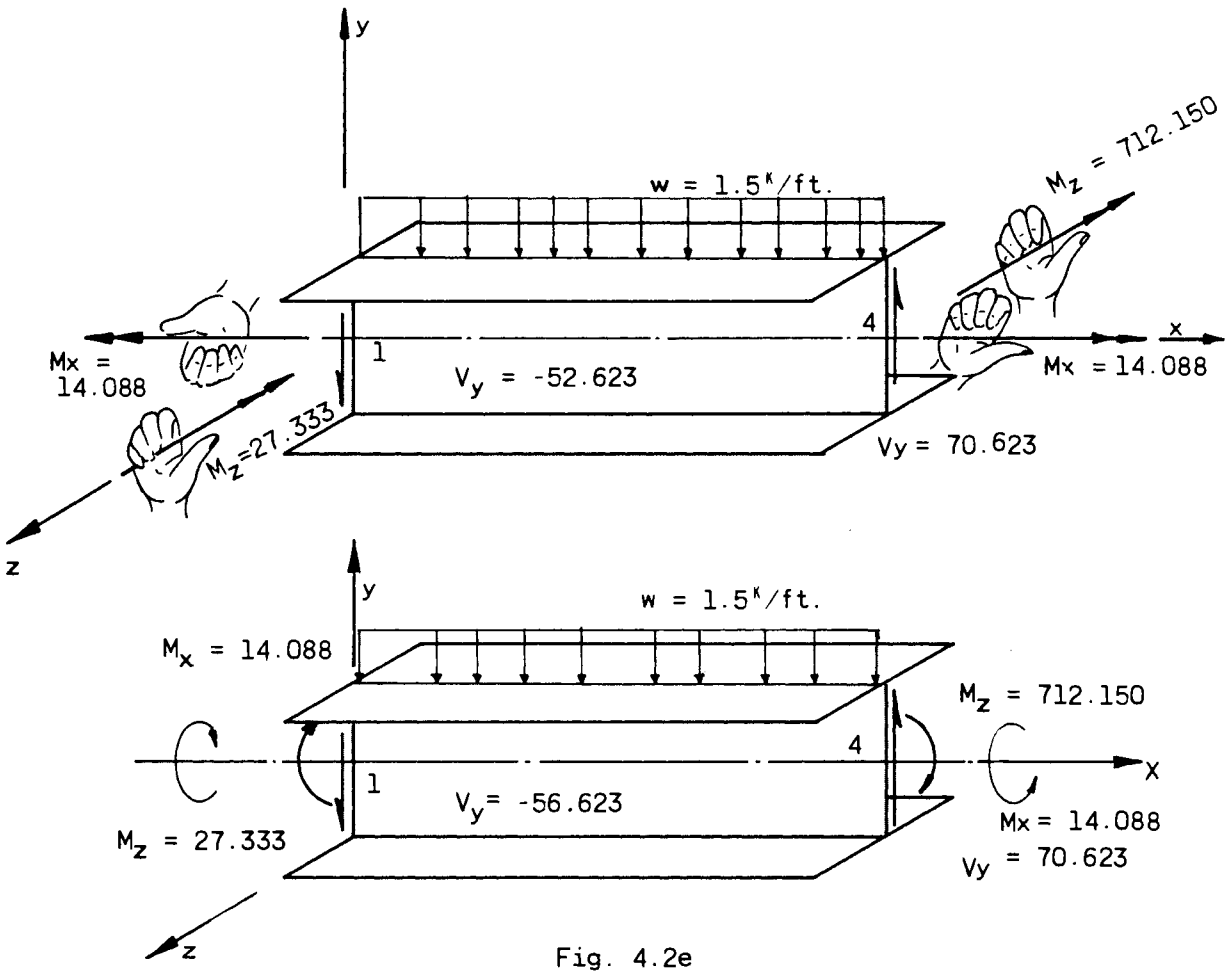

Fig. 4.2e

LOADING - TWO

MEMBER FORCES

MEMBER	JOINT	FORCE SHEAR Y	TORSIONAL	BENDING Z
11	1	-52.6235809	-14.0877104	-27.3325195
11	4	70.6235504	14.0877104	-712.1503906

The output results for the members end forces of member 11 are shown above. The double headed torque (M_x) and moment (M_z) vectors are shown in the upper free body diagram, their direction being determined directly from the output results. The right hand rule is applied to the vectors to determine how the torques and moments act on the ends of the member as shown in the lower free body diagram

Shown in Figure 4.2f below is a free body diagram of joint 4, followed by the output results for the members meeting at joint 4 and the resulting joint forces at joint 4 for LOADING TWO.

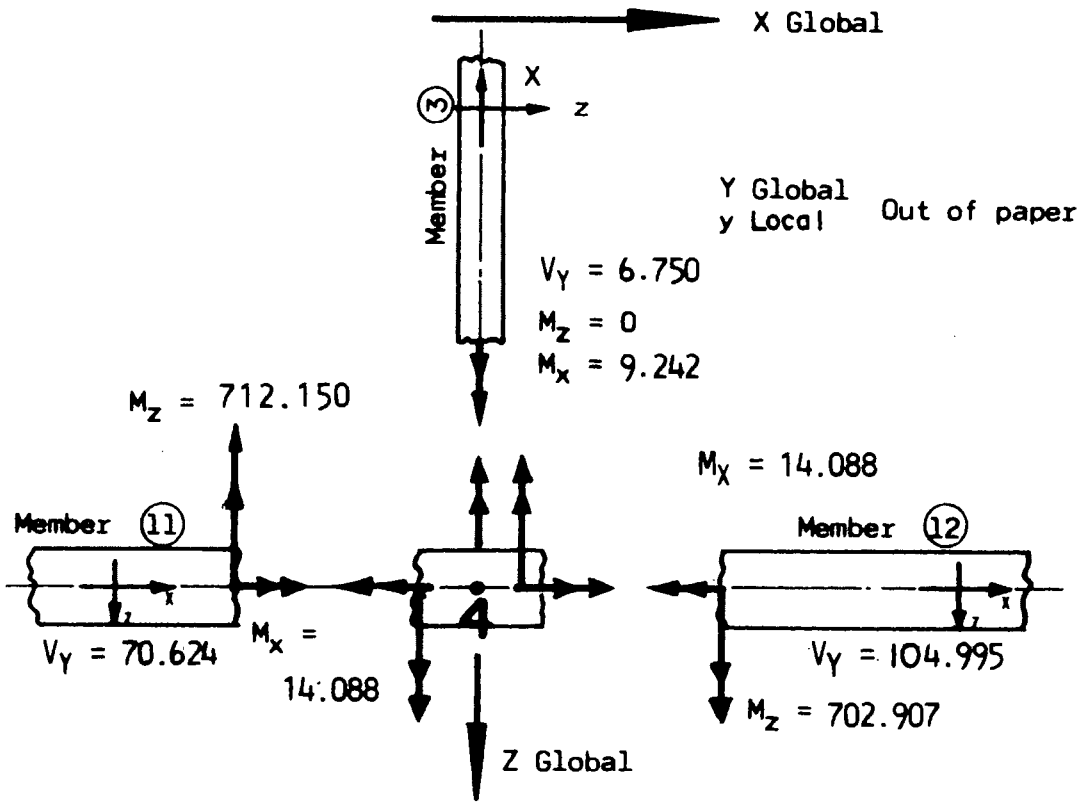

Fig. 4.2f

LOADING - TWO

MEMBER FORCES

MEMBER	JOINT	FORCE SHEAR Y	TORSIONAL	BENDING Z
3	4	6.7499990	-9.2423000	0.0
3	5	6.7499914	9.2423000	0.0
11	1	-52.6235809	-14.0877104	-27.3325155
11	4	70.6235504	14.0877104	-712.1503906
12	4	104.9951172	-14.0877104	702.9079590
12	7	-86.9951172	14.0877104	449.0324473

RESULTANT JOINT LOADS - SUPPORTS

JOINT	FORCE Y FORCE	X MOMENT	Z MOMENT
4	182.3687286	0.0	0.0000000

The vectors of the moments and torques acting on the ends of the members are directed as indicated by the output results in the local coordinate system for each of the members. Equal and opposite torques and moments acting on joint 4 are also shown in the diagram. These forces are in the global coordinate system. Resolution of the member end forces applied to the joint should be equal and opposite to the forces reported for the RESULTANT JOINT LOADS - SUPPORTS for joint 4. These forces are resolved in the calculations below, note that the results are equal and opposite to the results reported at joint 4 and the joint is in equilibrium.

$M_x = -14.0877 + 14.0877 = 0.0000$ KIP FT.

$M_z = 712.1504 - 9.2423 - 702.9079 = 0.0002$ KIP FT.

$V_y = -70.6236 - 6.7500 - 104.9951 = 182.3687$ KIPS

To further illustrate this technique consider a more general case with non-orthogonal members meeting at a joint such as at joint 13 shown in Figure 4.2g. The output results for the members meeting at the joint and the joint follow.

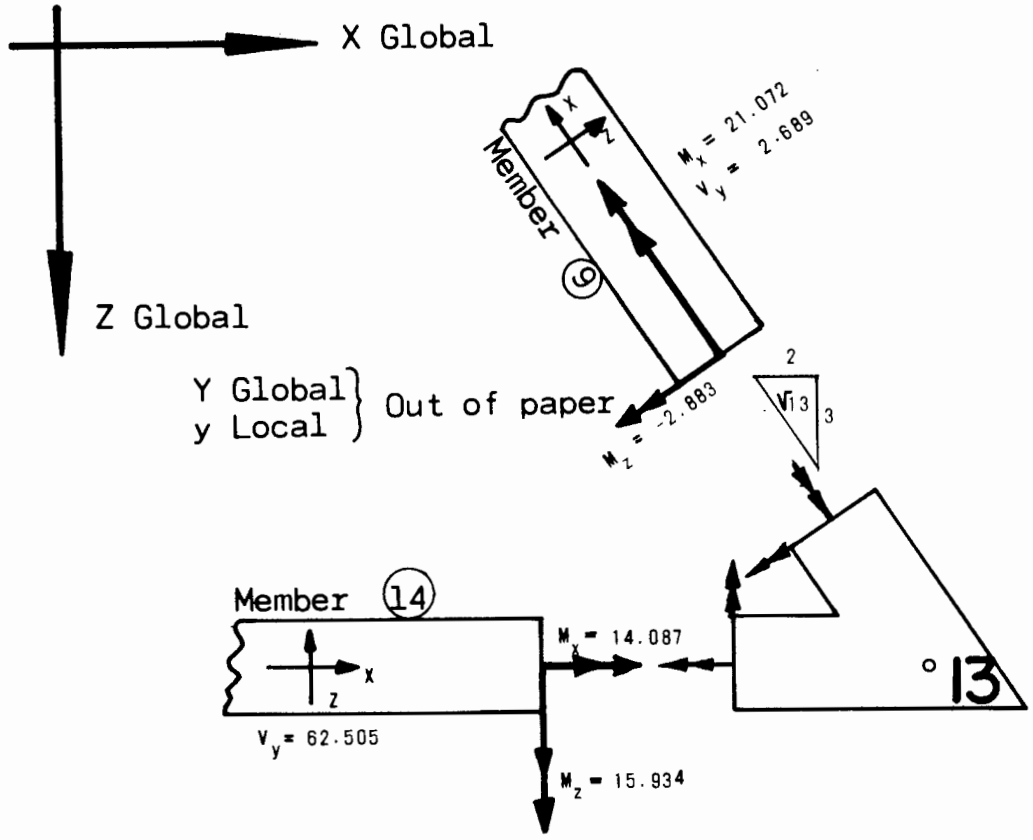

Fig. 4.2g

LOADING - TWO

MEMBER FORCES

MEMBER	JOINT	FORCE SHEAR Y	TORSIONAL	BENDING Z
9	13	2.6890841	21.0722198	-2.8931692
9	14	13.5358896	-21.0722198	-55.7799377
14	10	-44.5047913	-14.0877104	-657.9914551
14	13	62.5047913	14.0877104	15.9338560

RESULTANT JOINT LOADS - SUPPORTS

JOINT	FORCE		
	Y FORCE	X MOMENT	Z MOMENT
13	65.1939792	0.0000023	-0.0000027

The vectors of the moments and the torque acting on the members are directed as indicated by the output results. Equal and opposite forces act on the joint as shown on the free body diagram. These forces now acting in the global coordinate system must be resolved into the direction of the global coordinate axes. The forces are resolved in the following calculations and agree with those reported in the output results for the RESULTANT JOINT LOADS - SUPPORTS.

$$\Sigma M_x = -14.0877 + \frac{3}{\sqrt{13}}(2.8832) + \frac{2}{\sqrt{13}}(21.0722)$$

$$= -14.0877 + 2.3990 + 11.6888 = +.0001 \text{ KIP FT.}$$

$$\Sigma M_z = -15.9338 - \frac{2}{\sqrt{13}}(2.8832) + \frac{3}{\sqrt{13}}(21.0722)$$

$$= -15.9338 - 1.5993 + 17.5331 = .0000 \text{ KIP FT.}$$

$$\Sigma V_y = -62.5048 - 2.6890 = -65.1938 \text{ KIPS}$$

4.3 Revised Plane Grid Problem (with RESTORE command)

The plane grid structure shown in Figure 4.2a will now be revised by removing the support as shown in Figure 4.3a below:

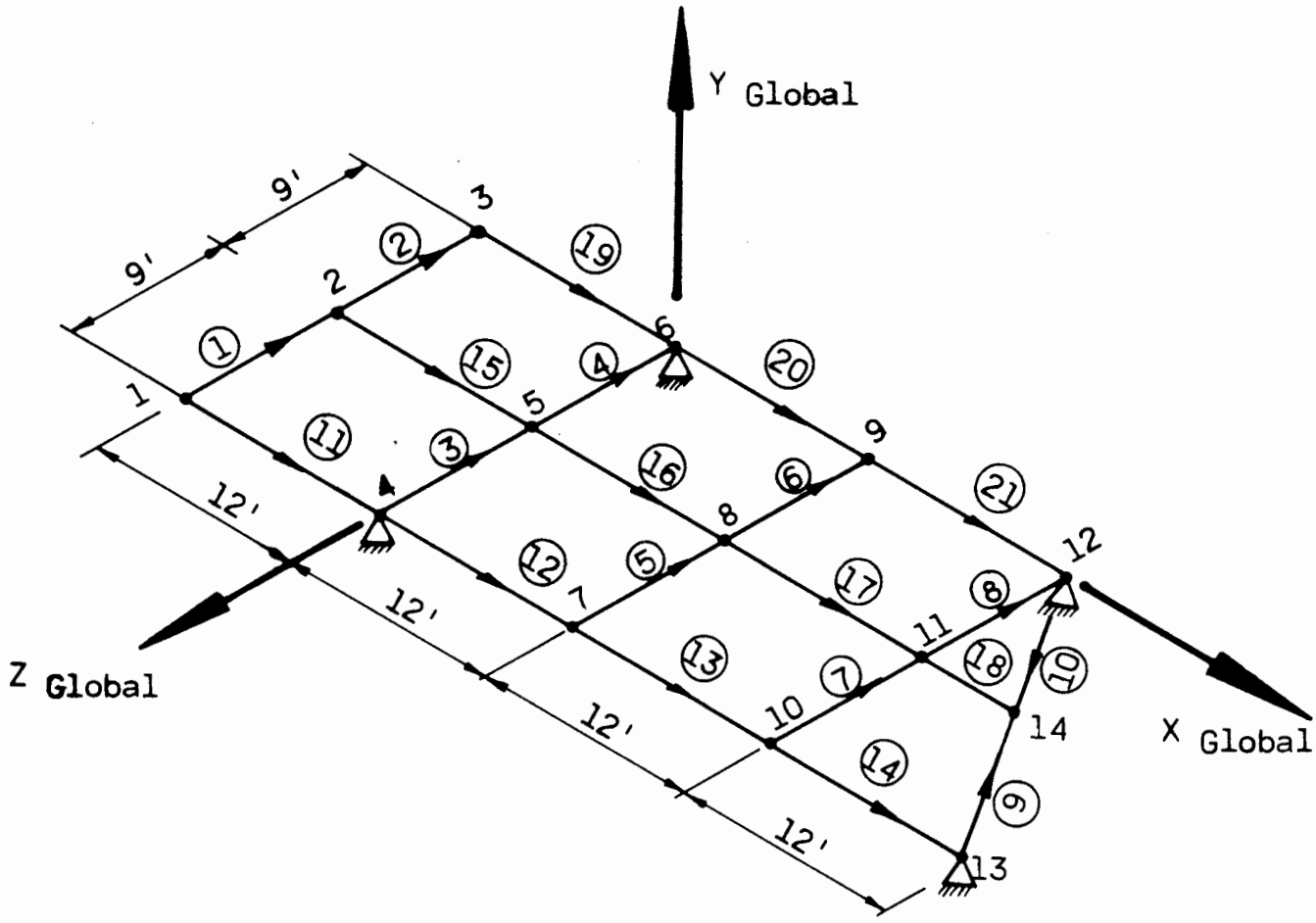

Fig. 4.3a

The revised structure will be reanalyzed for the loading conditions shown in Figure 4.2d. The command STRUDL RESTORE 'PROB. **4.2**' given on line 0010 restores the problem with the same status that it had when it was saved in the previous problem. The commands shown on lines 0020 thru 0060 are given to revise the structure. Following these are commands requesting print out of the STRUDL interpretation of the revised structure. The structure is then reanalyzed and saved for a subsequent analysis. The STRUDL output for the revised structure is on the following pages.

STATE OF CALIFORNIA BUSINESS AND TRANSPORTATION AGENCY DEPARTMENT OF PUBLIC WORKS DIVISION OF ADMINISTRATIVE SERVICES

COMPUTER SYSTEMS

ICES

SUBSYSTEM NAME	SOURCE DIST. UNIT	CHARGE DIST. UNIT	EXPENDITURE AUTHORIZATION	SPECIAL DESIGNATION WHEN APPLICABLE	SEQUENCE
					0001

```
STRUDL RESTORE 'PROB 4.2'                                  10
DELETIONS                                                  20
    JOINT 14 RELEASES MOMENT X Z                           30
CHANGES                                                    40
    JOINT 14 COORDINATES FREE                              50
CHANGE ID 'PROB 4.3' 'PROB 4.2 WITH JOINT 14 SUPPORT REMOVED  60
UNITS INCHES                                               70
PRINT JOINT COORDINATES                                    80
PRINT JOINT RELEASES                                       90
STIFFNESS ANALYSIS                                         100
UNITS FEET KIPS                                            110
LIST FORCES REACTIONS DISPLACEMENTS                        120
```

```
STRUDL RESTORE 'PROB 4.2'                                          $ 14N 28    0010

          ***********************************************
          *                                             *
          *     ICES STRUDL II       VERSION 1 MOD 1    *
          *       THE STRUCTURAL DESIGN LANGUAGE        *
          *    MASSACHUSETTS INSTITUTE OF TECHNOLOGY    *
          *              STATE OF CALIFORNIA            *
          *     BRIDGE DEPARTMENT DIVISION OF HWYS.     *
          *    SPECIAL STUDIES SECTION  PH. 445-6519    *
          *     NOVEMBER 1969  INSTALLED APRIL 1970     *
          *            20:12:54        9/01/70          *
          *                                             *
          ***********************************************

DELETIONS                                                          $ 14N 28    0020

     JOINT 14 RELEASES MOMENT X Z                                  $ 14N 28    0030

CHANGES                                                            $ 14N 28    0040

     JOINT 14 COORDINATES FREE                                     $ 14N 28    0050

CHANGE ID 'PROB 4.3' 'PROB 4.2 WITH JOINT 14 SUPPORT REMOVED       $ 14N 28    0060

UNITS INCHES                                                       $ 14N 28    0070

PRINT JOINT COORDINATES                                            $ 14N 28    0080
```

```
****************************************
*  PROBLEM DATA FROM INTERNAL STORAGE  *
****************************************

JOB ID -  PROB 4.3     JOB TITLE -                                          I     S   -

ACTIVE UNITS -  LENGTH        WEIGHT        ANGLE        TEMPERATURE       TIME
JOINT COORDINATES-INCH---------KIP-----------RAD---------/ DEGF             SEC
JOINT            X             Y             Z      CONDITION

1            -144.000        0.0         216.000
2            -144.000        0.0         108.000
3            -144.000        0.0           0.0
4               0.0          0.0         216.000    SUPPORT
5               0.0          0.0         108.000
6               0.0          0.0           0.0      SUPPORT
7             144.000        0.0         216.000
8             144.000        0.0         108.000
9             144.000        0.0           0.0
10            288.000        0.0         216.000
11            288.000        0.0         108.000
12            288.000        0.0           0.0      SUPPORT
13            432.000        0.0         216.000    SUPPORT
14            360.000        0.0         108.000


JOINT RELEASES-----------------------------------/ELASTIC SUPPORT RELEASES-----------------------------------------------/
JOINT    FORCE  MOMENT    THETA 1   THETA 2   THETA 3      KFX          KFY          KFZ          KMX          KMY          KMZ
4               X   Z     0.0       0.0       0.0          0.0          0.0          0.0          0.0          0.0          0.0
6               X   Z     0.0       0.0       0.0          0.0          0.0          0.0          0.0          0.0          0.0
12              X   Z     0.0       0.0       0.0          0.0          0.0          0.0          0.0          0.0          0.0
13              X   Z     0.0       0.0       0.0          0.0          0.0          0.0          0.0          0.0          0.0


****************************************
*  END OF DATA FROM  INTERNAL STORAGE  *
****************************************
```

```
****************************************
*  PROBLEM DATA FROM INTERNAL STORAGE  *
****************************************
```

JOB ID - PROB 4.3 JOB TITLE - I 5 -

ACTIVE UNITS - LENGTH WEIGHT ANGLE TEMPERATURE TIME

JOINT RELEASES----INCH----------KIP----------RAD--/ELASTIC BBBPORT RELEASESEC----------/

JOINT	FORCE	MOMENT	THETA 1	THETA 2	THETA 3	KFX	KFY	KFZ	KMX	KMY	KMZ
4	X	Z	0.0	0.0	0.0	0.0	0.0	0.0	0.0	0.0	0.0
6	X	Z	0.0	0.0	0.0	0.0	0.0	0.0	0.0	0.0	0.0
12	X	Z	0.0	0.0	0.0	0.0	0.0	0.0	0.0	0.0	0.0
13	X	Z	0.0	0.0	0.0	0.0	0.0	0.0	0.0	0.0	0.0

```
****************************************
*  END OF DATA FROM  INTERNAL STORAGE  *
****************************************
```

STIFFNESS ANALYSIS $ 14N 28 0100

UNITS FEET KIPS $ 14N 28 0110

LIST FORCES REACTIONS DISPLACEMENTS $ 14N 28 0120

LOADING - TWO

MEMBER FORCES

MEMBER	JOINT	FORCE AXIAL	FORCE SHEAR Y	FORCE SHEAR Z	MOMENT TORSIONAL	MOMENT BENDING Y	MOMENT BENDING Z
1	1		53.7688293		-34.3650055		-4.5623055
1	2		-40.2688293		34.3650055		427.7316895
2	2		-37.3057404		45.1313477		-416.3808594
2	3		50.8057251		-45.1313477		19.8793488
3	4		6.7499990		-16.3863678		0.0
3	5		6.7499914		16.3863678		0.0
4	5		6.7499990		27.9139099		0.0
4	6		6.7499914		-27.9139099		0.0
5	7		6.7499990		11.4831123		0.0
5	8		6.7499914		-11.4831123		0.0
6	8		6.7499990		-3.4406166		0.0
6	9		6.7499914		3.4406166		0.0
7	10		6.7499990		19.9652252		0.0
7	11		6.7499914		-19.9652252		0.0
8	11		6.7499990		-25.2487640		0.0
8	12		6.7499914		25.2487640		0.0
9	13		77.7060547		37.8762970		30.7340393
9	14		-61.4811401		-37.8762970		722.0358887
10	12		80.6691742		-3.6918430		21.4307404
10	14		-64.4442291		3.6918430		763.3898026
11	1		-53.7688293		4.5623055		-34.3650055
11	4		71.7687988		-4.5623055		-718.8608398
12	4		105.4855720		4.5623055		702.4743652
12	7		-87.4856720		-4.5623055		455.3537598
13	7		30.7357178		4.5623055		-443.8706055
13	10		-12.7357330		-4.5623055		704.6992188
14	10		-44.0142517		4.5623055		-684.7341309
14	13		62.0142517		-4.5623055		48.5631866
15	2		77.5745544		-11.3507366		79.4963684
15	5		-59.5745850		11.3507366		743.3984375
16	5		46.0745850		-11.3507366		-699.0981445
16	8		-28.0745850		11.3507366		1143.9931641
17	8		-35.4253845		-11.3507366		-1158.9167480
17	11		53.4253845		11.3507366		625.8122559
18	11		-116.9253540		-11.3507366		-671.0261230
18	14		125.9253540		11.3507366		-57.5258484
19	3		-50.8057251		-19.8793488		-45.1313477
19	6		68.8056793		19.8793488		-672.5373535
20	6		74.0623627		-19.8793488		644.6235352
20	9		-56.0623779		19.8793488		136.1248016
21	9		-0.6876096		-19.8793488		-132.6842194
21	12		18.6875916		19.8793488		16.4328918

RESULTANT JOINT LOADS - SUPPORTS

JOINT	FORCE X FORCE	FORCE Y FORCE	FORCE Z FORCE	MOMENT X MOMENT	MOMENT Y MOMENT	MOMENT Z MOMENT
4		184.0045471		0.0000000		0.0000000
6		149.6180420		0.0000000		0.0000000
12		106.1067963		0.0000310		-0.0000363
13		139.7203522		-0.0000297		0.0000348

RESULTANT JOINT DISPLACEMENTS - SUPPORTS

JOINT	DISPLACEMENT X DISP.	DISPLACEMENT Y DISP.	DISPLACEMENT Z DISP.	ROTATION X ROT.	ROTATION Y ROT.	ROTATION Z ROT.
4		0.0		-0.3685312		-0.0746460
6		0.0		0.3213336		0.0541444
12		0.0		0.6174676		0.0113345
13		0.0		-0.4704752		0.1849637

RESULTANT JOINT DISPLACEMENTS - FREE JOINTS

JOINT	DISPLACEMENT X DISP.	DISPLACEMENT Y DISP.	DISPLACEMENT Z DISP.	ROTATION X ROT.	ROTATION Y ROT.	ROTATION Z ROT.
1		0.0917217		-0.3345499		0.0219575
2		-2.1362104		-0.0817494		-0.3619827
3		-1.3921423		0.1732666		0.1422435
5		-6.0995998		0.0027940		-0.2577214
7		-1.4294014		-0.4025126		-0.1060957
8		-7.6452856		0.0873374		0.0221984
9		-0.0051920		0.4694006		-0.0162416
10		-1.7214994		-0.4364939		0.0703644
11		-5.5927219		0.1718809		0.2934742
14		-3.6388159		0.2141526		0.3397898

```
**************************
*RESULTS OF LATEST ANALYSIS*
**************************
```

PROBLEM - PROB 4.3 TITLE - T S -

ACTIVE UNITS FEET KIP RAD DEGF SEC

ACTIVE STRUCTURE TYPE PLANE GRID

ACTIVE COORDINATE AXES X Z

LOADING - ONE

MEMBER FORCES

MEMBER	JOINT	FORCE AXIAL	FORCE SHEAR Y	FORCE SHEAR Z	MOMENT TORSIONAL	MOMENT BENDING Y	MOMENT BENDING Z
1	1		37.9015045		-40.7877808		-6.0942955
1	2		-24.4015045		40.7877808		286.4577637
2	2		-24.2148895		37.7550354		-282.3230215
2	3		37.7148895		-37.7550354		3.6380730
3	4		6.7499990		-22.1270752		0.0
3	5		6.7499914		22.1270752		0.0
4	5		6.7499990		19.0433044		0.0
4	6		6.7499914		-19.0433044		0.0
5	7		6.7499990		8.7842321		0.0
5	8		6.7499914		-8.7842321		0.0
6	9		6.7499990		-11.5095387		0.0
6	9		6.7499914		11.5095387		0.0
7	10		6.7499990		23.5823059		0.0
7	11		6.7499914		-23.5823059		0.0
8	11		6.7499990		-25.0981140		0.0
8	12		6.7499914		25.0981140		0.0
9	13		43.5734253		36.0552521		31.3612518
9	14		-27.3484497		-36.0552521		352.2072754
10	12		43.7600403		-12.2799768		-3.8142509
10	14		-27.5350647		12.2799768		389.4013672
11	1		-87.9014893		6.0942955		-40.7877808
11	4		105.9014893		-6.0942955		-1122.0300293
12	4		66.5184326		6.0942955		1099.9030762
12	7		-48.5184784		-6.0942955		-409.6811523
13	7		41.7684784		6.0942955		418.4655762
13	10		-23.7684937		-6.0942955		-25.2437286
14	10		17.0184937		6.0942955		48.8260345
14	13		0.9814950		-6.0942955		47.3958893
15	2		48.6164093		-4.1357355		78.5428314
15	5		-30.6164093		4.1357365		396.8540039
15	5		17.1164246		-4.1357365		-355.6835937
16	8		0.8835641		4.1357365		453.0808105
17	8		-14.3835573		-4.1357365		-473.3745117
17	11		32.3835449		4.1357365		192.7718658
18	11		-45.8835449		-4.1357365		-241.4522858
18	14		54.8835297		4.1357365		-60.8488770
19	3		-87.7148590		-3.6380730		-37.7550354
19	6		105.7148590		3.6380730		-1122.8234863
20	6		69.4049835		-3.6380730		1103.7800293
20	9		-51.4050446		3.6380730		-378.9196777
21	9		44.6550598		-3.6380730		390.4289551
21	12		-26.6550598		3.6380730		37.4314270

RESULTANT JOINT LOADS - SUPPORTS

JOINT	FORCE X FORCE	FORCE Y FORCE	FORCE Z FORCE	MOMENT X MOMENT	MOMENT Y MOMENT	MOMENT Z MOMENT
4		179.1699829		-0.0000000		-0.0000000
6		181.8699188		0.0000000		0.0000000
12		23.8549652		0.0000152		-0.0000178
13		44.5549316		-0.0000152		0.0000177

RESULTANT JOINT DISPLACEMENTS - SUPPORTS

JOINT	DISPLACEMENT X DISP.	DISPLACEMENT Y DISP.	DISPLACEMENT Z DISP.	ROTATION X ROT.	ROTATION Y ROT.	ROTATION Z ROT.
4		0.0		-0.1963151		0.2221994
6		0.0		0.2219673		0.1877453
12		0.0		0.2761621		-0.0749838
13		0.0		-0.3324912		-0.0528987

RESULTANT JOINT DISPLACEMENTS - FREE JOINTS

JOINT	DISPLACEMENT X DISP.	DISPLACEMENT Y DISP.	DISPLACEMENT Z DISP.	ROTATION X ROT.	ROTATION Y ROT.	ROTATION Z ROT.
1		-3.9470625		-0.1509231		0.3779046
2		-4.7539759		0.0238146		-0.0777936
3		-3.5363770		0.1948700		0.3440214
5		-5.5124531		0.0546187		-0.0250134
7		1.1436758		-0.2417071		0.0026862
8		-5.0865879		0.0854228		0.1008273
9		0.7439476		0.2490647		-0.0277620
10		0.6943499		-0.2870932		-0.0580484
11		-3.1654863		0.1162269		0.2054229
14		-1.8680568		0.1316290		0.2195451

4.4 EXAMPLE PLANE GRID PROBLEM

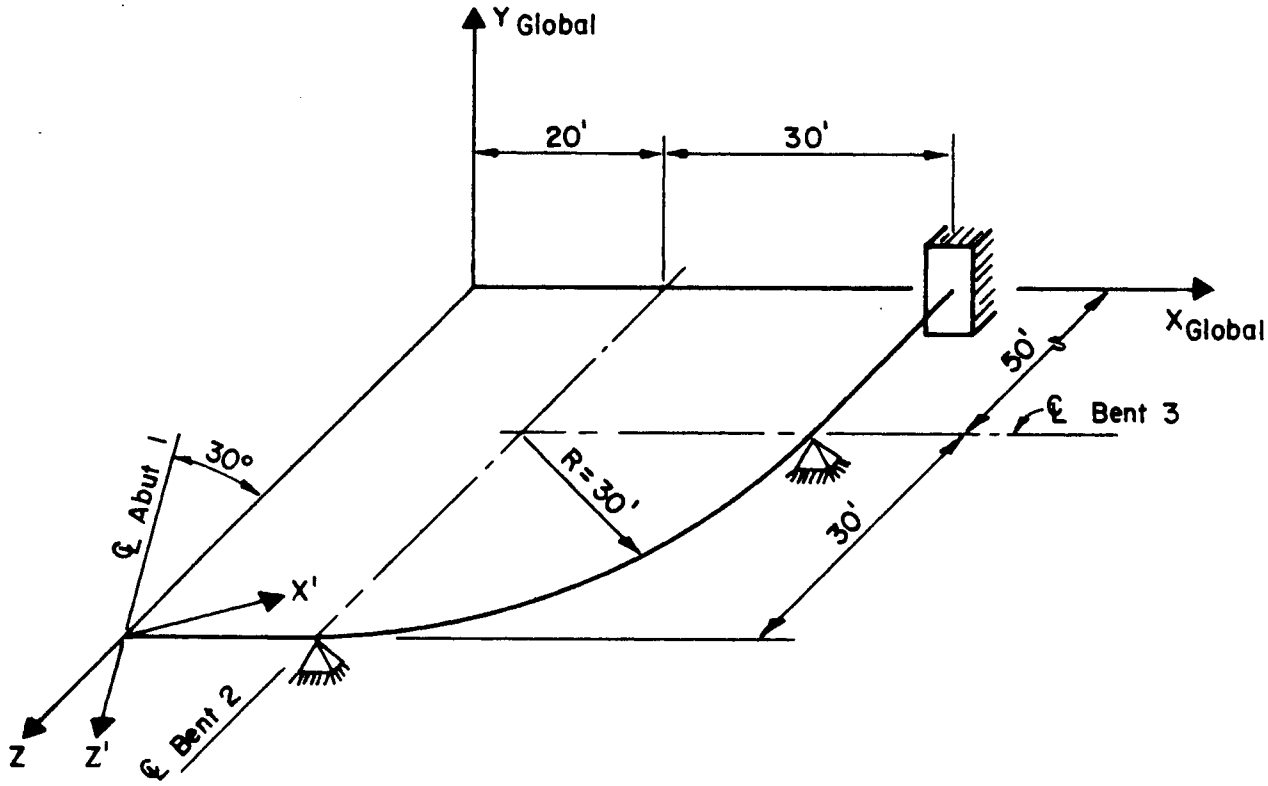

Using STRUDL determine the following for the grid structure shown in the sketch above:

1. The member forces at the 1/5 points for all three spans due to the imposed dead load and overturning force. Use 2200 pounds per ft. for the dead load. The overturning force is 200 pounds per foot and is applied at the right edge of the soffit.

2. The live load moment envelope, local moment Z, for the curved span. Use the 1/5 points also for the moment envelope. The intensity of the live loading is 85 pounds per square foot.

3. The torsional constant IX, for the two celled box section using the method of simultaneous equations or the method of successive corrections as outlined in Appendix C of the Bridge STRUDL manual. Compare the torsional constant computed using one of these two methods with the torsional constant computed neglecting the interior web. The torsional constants for standard closed sections are also given in this appendix on page C-6.

   Include the curb sections in calculating the torsional stiffness.

Note the skew angle at Abutment 1. The support conditions at the abutment are such that the structure is restrained from rotating about the X' axis and free to rotate about the Z' axis.

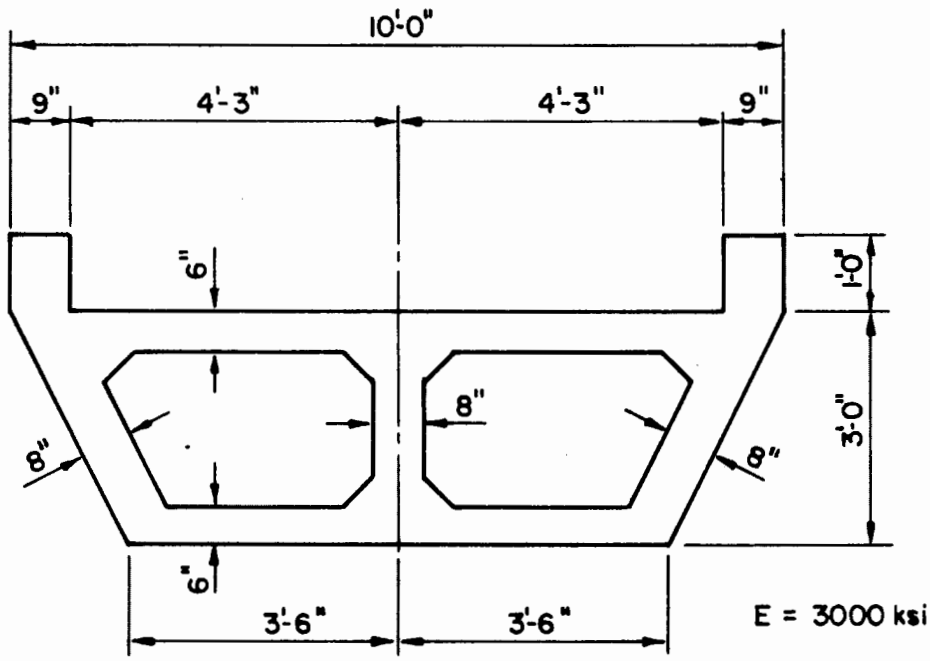

TYPICAL SECTION

The ICES/STRUDL coding for this problem is as follows:

```
STRUDL 'PROB 4.4' 'EXAMPLE PLANE GRID PROBLEM, POC'                $ 14T 60   0010
$                                                                  $ 14T 60   0020
TYPE PLANE GRID XZ                                                 $ 14T 60   0030
UNITS FEET KIPS DEGREES                                            $ 14T 60   0040
JOINT COORDINATES                                                  $ 14T 60   0100
     1    0.        0.        80.        SUPPORT                  $ 14T 60   0110
     2   20.        0.        80.        SUPPORT                  $ 14T 60   0120
     3   29.271     0.        78.532                              $ 14T 60   0130
     4   37.634     0.        74.271                              $ 14T 60   0140
     5   44.271     0.        67.634                              $ 14T 60   0150
     6   48.532     0.        59.271                              $ 14T 60   0160
     7   50.000     0.        50.000     SUPPORT                  $ 14T 60   0170
     8   50.000     0.         0.        SUPPORT                  $ 14T 60   0180
MEMBER INCIDENCES                                                  $ 14T 60   0200
     1    1    2                                                   $ 14T 60   0210
     2    2    3                                                   $ 14T 60   0220
     3    3    4                                                   $ 14T 60   0230
     4    4    5                                                   $ 14T 60   0240
     5    5    6                                                   $ 14T 60   0250
     6    6    7                                                   $ 14T 60   0260
     7    7    8                                                   $ 14T 60   0270
CONSTANTS E 432.E3 ALL                                             $ 14T 60   0280
$POSSIBLE DEGREES OF FREEDOM INCLUDE TRANSLATION Y ROTATION X Z    $ 14T 60   0290
JOINT RELEASE                                                      $ 14T 60   0300
     2 7 MOMENT X Z                                                $ 14T 60   0310
     1 MOMENT Z TH2 -30.                                           $ 14T 60   0320
MEMBER 1 TO 7 PROPERTIES PRISMATIC IX 38.15  IZ 19.79              $ 14T 60   0330
```

```
LOADING 1 'DEAD LOAD'    $ CROSS SECTIONAL AREA=14.65          $ 14T 60    0340
     MEMBERS 1 TO 7 LOAD  FORGE Y GLOBAL UNIFORM W -2.2        $ 14T 60    0350
LOADING 2 'OVERTURNING'                                        $ 14T 60    0360
     MEMBERS 1 TO 7 LOAD  FORGE Y GLOBAL UNIFORM W 0.2         $ 14T 60    0370
     MEMBERS 1 TO 7 LOAD  MOMENT X UNIFORM W -.7               $ 14T 60    0380
LOADING 3 'LIVE LOAD SPAN 1'                                   $ 14T 60    0390
     MEMBER 1 LOAD  FORCE Y GLOBAL UNIFORM W -.68              $ 14T 60    0400
LOADING 4 'LIVE LOAD SPAN 2'                                   $ 14T 60    0410
     MEMBER 2 TO 6 LOAD  FORCE Y GLOBAL UNIFORM W -.68         $ 14T 60    0420
LOADING 5 'LIVE LOAD SPAN 3'                                   $ 14T 60    0430
     MEMBER 7 LOAD  FORCE Y GLOBAL UNIFORM W -.68              $ 14T 60    0440
LOADING 6 'LIVE LOAD SPAN 1-2'                                 $ 14T 60    0450
     MEMBER 1 TO 6 LOAD  FORCE Y GLOBAL UNIFORM W -.68         $ 14T 60    0460
LOADING 7 'LIVE LOAD SPAN 2-3'                                 $ 14T 60    0470
     MEMBER 2 TO 7 LOAD  FORCE Y GLOBAL UNIFORM W -.68         $ 14T 60    0480
LOADING 8 'LIVE LOAD SPAN 1-3'                                 $ 14T 60    0490
     MEMBER 1 7 LOAD  FORCE Y GLOBAL UNIFORM W -.68            $ 14T 60    0500
LOADING 9 'LIVE LOAD ALL SPANS'                                $ 14T 60    0510
     MEMBER 1 TO 7 LOAD  FORCE Y GLOBAL UNIFORM W -.68         $ 14T 60    0520
PRINT DATA                                                     $ 14T 60    0600
DUMP TIME                                                      $ 14T 60    0610
STIFFNESS ANALYSIS                                             $ 14T 60    0620
LIST FORCES REACTIONS DISPLACEMENTS                            $ 14T 60    0630
LOAD LIST 3 TO 9                                               $ 14T 60    0640
LIST FORCE ENVELOPE MEMBERS 2 TO 6 SECTION FRACT  NS 2 0. 1.0  $ 14T 60    0650
LOAD LIST 1 2                                                  $ 14T 60    0660
LIST SECTION FORCES MEMBERS 1 7 SECTION FRACT DS 0. .2         $ 14T 60    0670
LIST SECTION FORCES MEMBERS 2 TO 6 SECTION FRACT  NS 2 0. 1.0  $ 14T 60    0675
```