DIST	COUNTY	ROUTE	POST MILES TOTAL PROJECT	SHEET No.	TOTAL SHEETS

REGISTERED CIVIL ENGINEER DATE

PLANS APPROVAL DATE

REGISTERED PROFESSIONAL ENGINEER No. Exp. CIVIL STATE OF CALIFORNIA

The State of California or its officers or agents shall not be responsible for the accuracy or completeness of scanned copies of this plan sheet.

The Registered Civil Engineer for the project is responsible for the selection and proper application of the component design and any modifications shown.

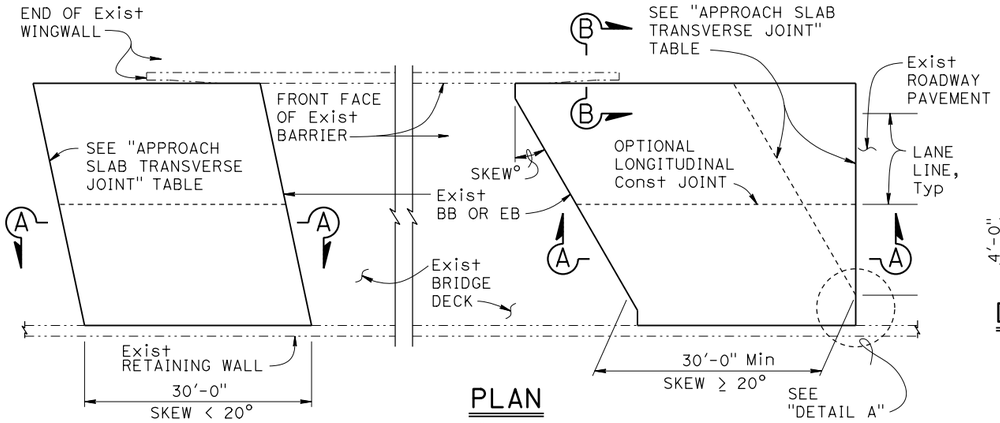

PLAN

1" = 10'

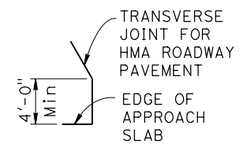

DETAIL A

No Scale

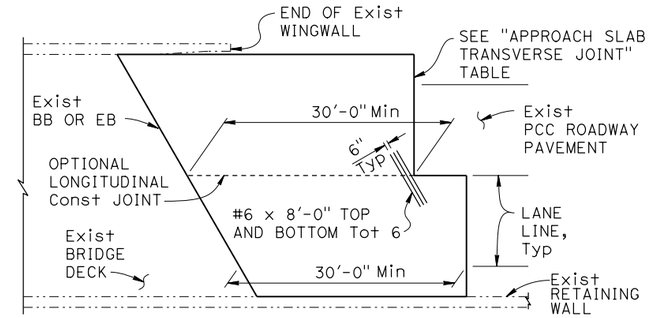

END STAGGER DETAIL

1" = 10'

APPROACH SLAB TRANSVERSE JOINT		
APPROACH SKEW	WITH HMA ROADWAY PAVEMENT	WITH PCC ROADWAY PAVEMENT
< 20°	PARALLEL TO BB OR EB	PARALLEL TO BB OR EB
20° - 45°	PARALLEL TO BB OR EB USE "DETAIL A"	STAGGER AT LANE LINES 24' TO 36' APART, SEE "END STAGGER DETAIL"
> 45°	PARALLEL TO BB OR EB USE "DETAIL A"	STAGGER AT EACH LANE LINE, SEE "END STAGGER DETAIL"

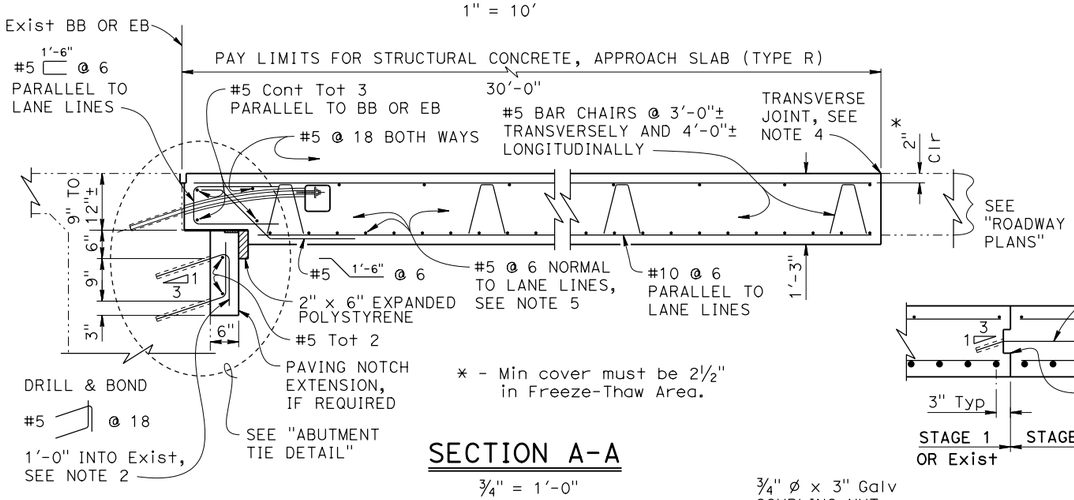

* - Min cover must be 2½" in Freeze-Thaw Area.

SECTION A-A

¾" = 1'-0"

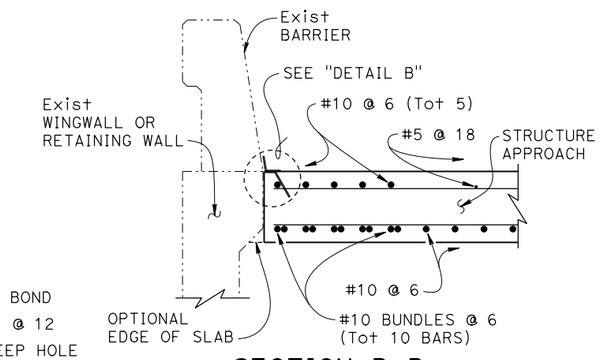

SECTION B-B

¾" = 1'-0"

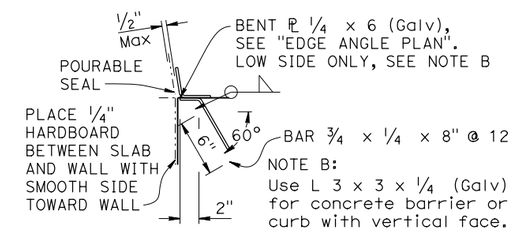

DETAIL B

1½" = 1'-0"

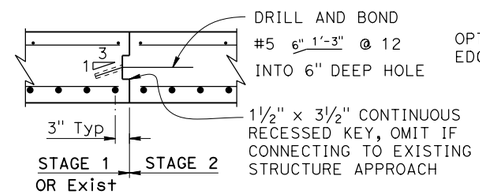

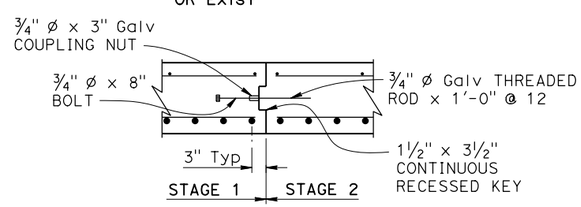

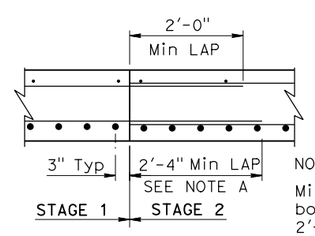

NOTE A:
Min lap splice for bottom Reinf must be 2'-9" in Freeze-Thaw Area.

LONGITUDINAL CONSTRUCTION JOINT ALTERNATIVES

¾" = 1'-0"

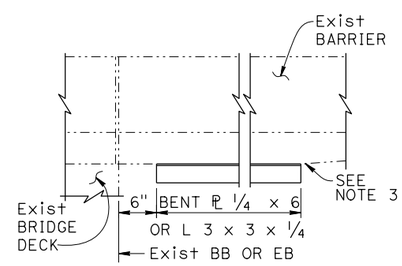

EDGE ANGLE PLAN

1" = 1'-0"

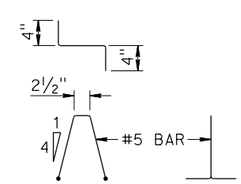

BAR CHAIR DETAIL

1" = 1'-0"

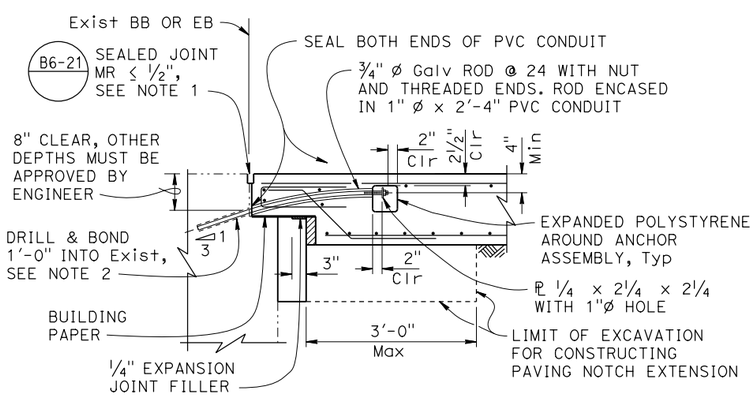

NOTE: For details not shown, see "SECTION A-A".

ABUTMENT TIE DETAIL

¾" = 1'-0"

NOTE:
The contractor must verify all controlling field dimensions before ordering or fabricating any material.

DESIGN NOTES

DESIGN: AASHTO LRFD Bridge Design Specifications, 2012 Edition with Caltrans Amendments, preface dated January 2014

LIMIT STATES: Service I, Strength I & II, Extreme II and Fatigue I (γ_{FAT} = 1.0)

DEAD LOAD: Includes 35 psf for future wearing surface

LIVE LOAD: HL93 and permit design load
Equivalent strip width method: W_1 = 12 ft
Slab span: L_1 = 24.5 ft

REINFORCED CONCRETE:
f_y = 60 ksi
f'_c = 3.6 ksi
n = 8

NOTES:

1. For details not shown, see other plan sheets. Adjust reinforcement to clear sawcut for sealed joint.
2. Space reinforcement to avoid existing prestress anchorages and other abutment reinforcement.
3. End the plate or edge angle at beginning of barrier transition, end of wingwall, or end of structure approach as applicable.
4. Transverse Joint must be a minimum of 5'-0" from an existing or constructed weakened plane joint in approach PCC roadway pavement. Refer to Standard Plans P10 and P14.
5. At the Contractor's option, approach slab transverse reinforcement may be placed parallel to BB or EB. Spacing of transverse reinforcement is measured along ℄ roadway.

—·—·— Indicates Existing Structure

BRIDGE STANDARD DETAILS

xs3-150	January 2015	The components of the Bridge Standard Details have been prepared under the responsible charge of the Technical Owner, a registered civil engineer in the State of California
FILE NO.	APPROVAL DATE	

STATE OF CALIFORNIA DEPARTMENT OF TRANSPORTATION

DIVISION OF ENGINEERING SERVICES

BRIDGE NO.

POST MILE

STRUCTURE APPROACH TYPE R (30D)

Refer to: http://www.dot.ca.gov/hq/esc/techpubs/manual/bridgemanuals/bridge-standard-detail-sheets/index.html

FILE => xs3-150.dgn
USERNAME => s136236 TIME PLOTTED => 16:52 DATE PLOTTED => 11-JUL-2016

ORIGINAL SCALE IN INCHES FOR REDUCED PLANS 0 1 2 3

UNIT:
PROJECT NUMBER & PHASE:
CONTRACT NO.:

DISREGARD PRINTS BEARING EARLIER REVISION DATES

REVISION DATES 7-7-16 SHEET OF