STATE OF CALIFORNIA - DEPARTMENT OF TRANSPORTATION - DIVISION OF STRUCTURES

DIST	COUNTY	ROUTE	POST MILE
03	Sac	50	1.51-2.12

To get to the Caltrans web site, go to: http://www.dot.ca.gov

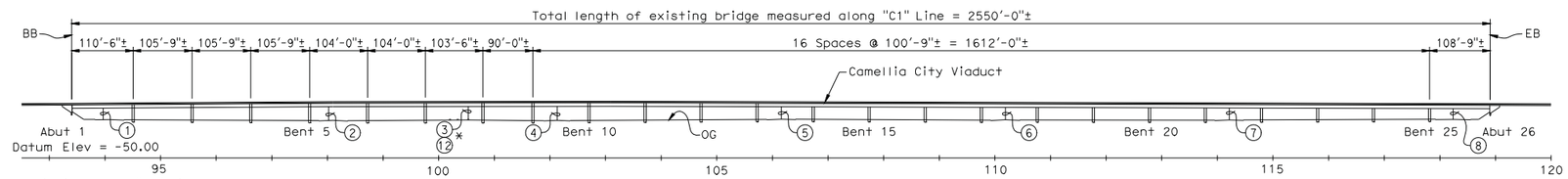

ELEVATION

1" = 100'

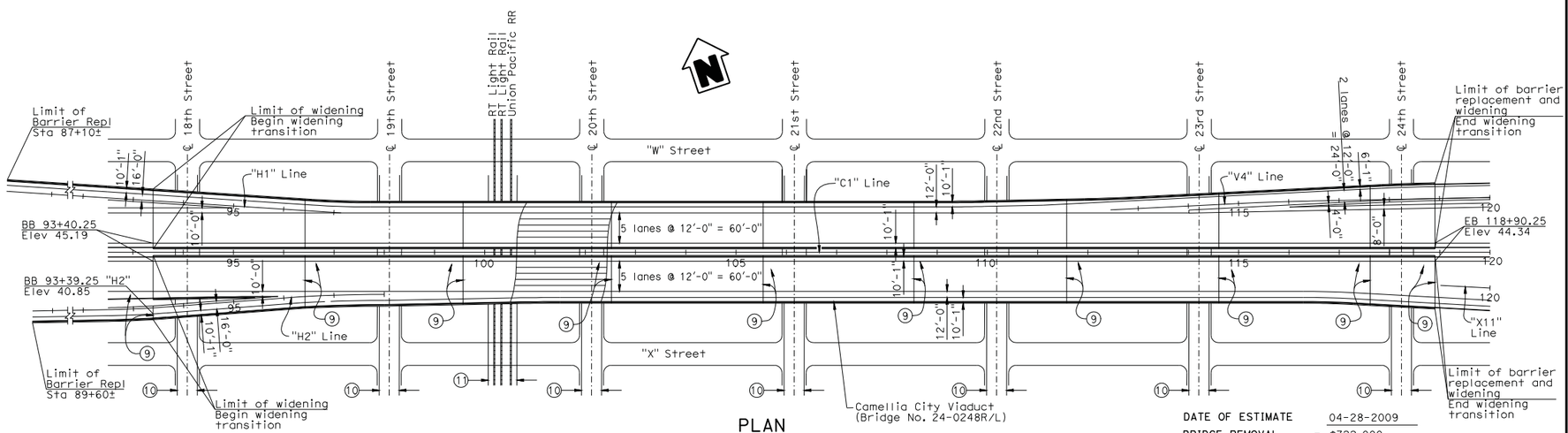

PLAN

1" = 100'

	Min Clearance
1	20'-8"±
2	24'-9"±
3	23'-7"± *
4	25'-6"±
5	22'-6"±
6	22'-6"±
7	21'-8"±
8	19'-6"±

Notes :

9 Remove, clean and replace with new joint seal, Type B.

10 Provide 40' falsework opening, typical at all local streets.

11 Provide 57' falsework opening at RR.

12 Provide 21' minimum falsework vertical clearance over RR, measured from top of rail

* - Minimum clearance to top of rail

DATE OF ESTIMATE	04-28-2009
BRIDGE REMOVAL	= $722,000
STRUCTURE DEPTH	= 6'-0"
LENGTH	= 2,550'-0"
WIDTH	= 20'-0"
AREA	= 51,000 SF
COST/ □_ INCLUDING 10% MOBILIZATION & 25% CONTINGENCY	= $275.09
TOTAL COST	= $14,751,000

DESIGNED BY Reza Erfanian	DATE 05-05-2009	STRUCTURE DESIGN BRANCH 7	ALTERNATIVE 1 - 1 of 2
DRAWN BY Gerald Dickerson	DATE 05-06-2009		RAILROAD CONCEPTUAL SUBMITTAL
CHECKED BY X	DATE X		CAMELLIA CITY VIADUCT
APPROVED X	DATE X		BRIDGE NO. 24-0248R/L · CU 03 · SCALE: 1" = 100' · EA 0F230K

STRUCTURES DESIGN ADVANCE PLANNING STUDY SHEET (ENGLISH) (REV. 10/25/05)

FILE => aps-24-0248rl-alt1rr01.dgn

USERNAME => s136481 DATE PLOTTED => 07-MAY-2009 TIME PLOTTED => 08:20

STATE OF CALIFORNIA - DEPARTMENT OF TRANSPORTATION - DIVISION OF STRUCTURES

DIST	COUNTY	ROUTE	POST MILE
03	Sac	50	1.51-2.12

To get to the Caltrans web site, go to: http://www.dot.ca.gov

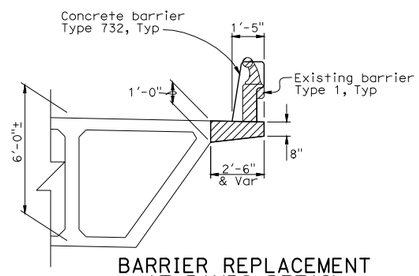

BARRIER REPLACEMENT AT RAMPS DETAIL

3/8" = 1'-0"

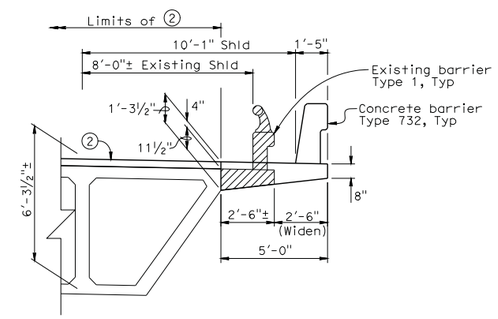

WIDENING DETAIL

3/8" = 1'-0"

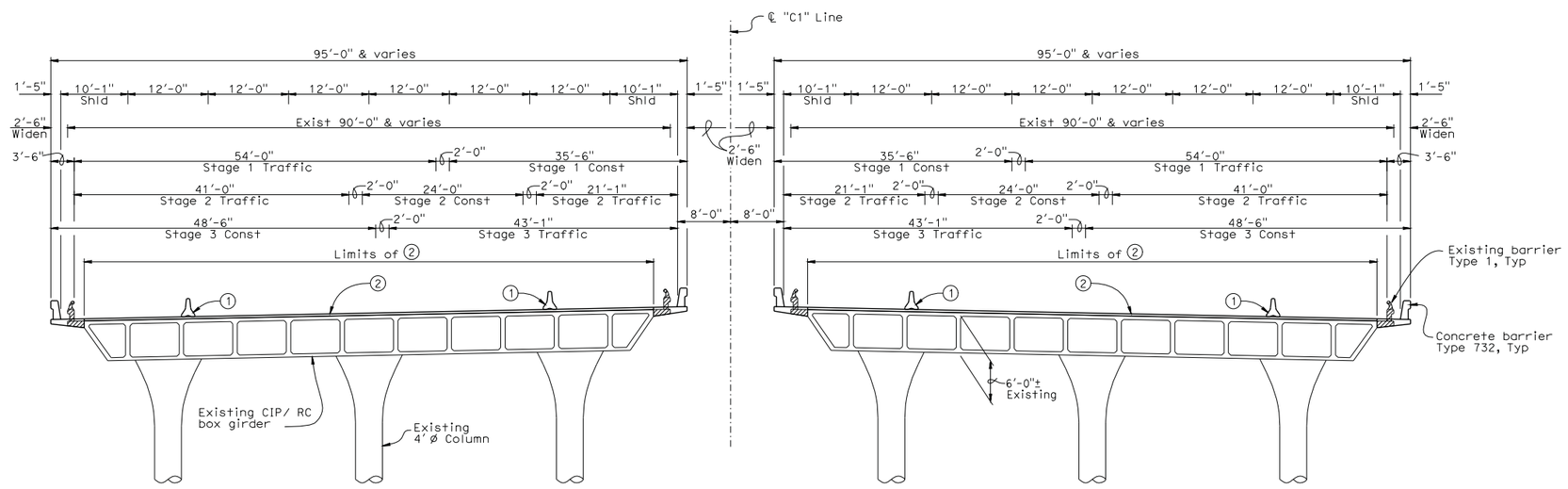

TYPICAL SECTION

1/8" = 1'-0"

Notes :

1. Temporary railing (Type K).
2. Remove ½" deck and place 4" Structural Concrete (Microdeck).

▨ - Indicates bridge removal.

DESIGNED BY Reza Erfanian	DATE 05-05-2009	STRUCTURE DESIGN BRANCH 7	ALTERNATIVE 1 - 2 of 2
DRAWN BY Gerald Dickerson	DATE 05-06-2009		RAILROAD CONCEPTUAL SUBMITTAL
CHECKED BY X	DATE X		CAMELLIA CITY VIADUCT
APPROVED X	DATE X		BRIDGE NO. 24-0248R/L · CU 03 · SCALE: As Noted · EA 0F230K

USERNAME => s136481 DATE PLOTTED => 07-MAY-2009 TIME PLOTTED => 08:20

STRUCTURES DESIGN ADVANCE PLANNING STUDY SHEET (ENGLISH) (REV. 10/25/05)

FILE => aps-24-0248r1-alt1-rr02.dgn