TRANSPORTATION ELECTRICAL EQUIPMENT SPECIFICATIONS

TEES 2009 ERRATA No.4

December 4, 2019

STATE OF CALIFORNIA
DEPARTMENT OF TRANSPORTATION

Gavin Newsom
Governor

David S. Kim
Secretary
California State Transportation Agency

Bob Franzoia
Acting Director
Department of Transportation

Steve Takigawa
Deputy Director
Maintenance and Operations

Jasvinderjit S. Bhullar
Program Manager
Traffic Operations

Stan Slavin
Chief, Office of Transportation Management Systems

Herasmo Iñiguez
Branch, Chief Traffic Control Systems

Table of Contents

TEES 2009 ERRATA No.4 i
CHAPTER 3 6
AUXILIARY CABINET SPECIFICATIONS 6
CHAPTER 3-SECTION 10 7
MODEL 700 POWER SUPPLY UNIT 7
3.10.3.1. Unit Chassis 7
3.10.3.2. Unit Design 7
3.10.3.3. Input Protection 7
3.10.3.4. Output Protection 7
3.10.3.5. Input fuses 7
3.10.3.6. Line and Load Regulation 7
3.10.3.7. Design Voltage 7
3.10.3.8. Full Load Current 7
3.10.3.9. Ripple Noise 7
3.10.3.10. Efficiency 7
3.10.3.11. Power Factor Correction 8
3.10.3.12. Circuit Capacitors 8
3.10.3.13. Front Panel and Terminals 8
3.10.3.14. LED Indicators 8
CHAPTER 3-SECTION 11 9
AUXILIARY EQUIPMENT & HARNESS DETAILS 9
CHAPTER 6-SECTION 8 10
332LS, 334LS, 336LS, 342LX, 344LX & 346LX CABINET DETAILS 10
6.8.10 Service Panel Assembly (SPA) Details sheet 1 of 3 10
6.8.11 Service Panel Assembly (SPA) Details sheet 2 of 3 10
6.8.12 Service Panel Assembly (SPA) Details sheet 3 of 3 10
CHAPTER 9-SECTION 1 11
GENERAL 11
9.1.1 Controller Unit 11
9.1.5 2070 Unit Module 12
CHAPTER 9-SECTION 2 13
MODEL 2070-1 CPU MODULE 13
9.2.1 Model 2070-1E CPU Module 13
9.2.4 2070-1E CPU Module 13
9.2.7 2070-1E CPU Module Software 13
9.2.3.6 Firmware Updates 13
CHAPTER 9-SECTION 5 14
model 2070-4 power supply module 14
9.5.5.1 AC Fail/Power Down Output Lines 14
9.5.6.11 Power Factor Correction 14
CHAPTER 9-SECTION 6 15
Model 2070LX + UNIT CHASSIS 15
9.6.1 General 15
9.6.2 Serial Motherboard 15
9.6.3 Model 2070LX + Unit Chassis 15
CHAPTER 9-SECTION 7 16
MODEL 2070 UNIT details 16

9.7.1 Model 2070 LX+ - Chassis Front View 16
9.7.2 Model 2070 LX+- Chassis Rear View 16
9.7.3 Model 2070 LX+ - Chassis Top View 16
9.7.4 Model 2070 LX+ - Chassis Motherboard 16
9.7.5 Model 2070 - Motherboard A1-A5 Connector Pinouts 16
9.7.6 Model 2070 - System PCB Modules, General 16
9.7.7 Model 2070 - 1E CPU Modules &Serial Port/SDLC Protocol 16
9.7.8 Model 2070-2, Field I/0 Modules 16
9.7.9 Model 2070-2A, Field I/O Module, C1 & C11 Connectors 16
9.7.10 Model 2070-3A, 3B & D Front Panel Assembly 16
9.7.11 Model 2070-3 FPA Key Codes 16
9.7.12 Model 2070-3 FPA Display Codes 16
9.7.13 Model 2070-4 Power Supply Module 16
9.7.14 Model 2070LX+ Motherboard A6 – A7 Connector Pinouts 16
9.7.15 Model 2070-1C CPU Module 16
9.7.16 Model 2070 - Serial Port Descriptors Defaults 16
9.7.17 Model 2070 - Power Failure Reaction 16
9.7.18 Model 2070-LAN 16
CHAPTER 10-SECTION 13 17
10.13.1 Model 2070-LAN Local Area Network Module 17
10.13.2 Mechanical/Electrical Requirements. 17
10.13.3 Model 2070-LAN Module Requirements 17
10.13.4 Network Standards 17
10.13.5 Modes of Operation 17
10.13.6 Network Media Support 18
10.13.7 LED Indicators 18
10.13.8 Form Factor 18
10.13.9 Power Requirements 18
10.13.10 Environmental 18
CHAPTER 12-SECTION 2 19
OPERATION 19
12.2.6 Transfer Time 19
CHAPTER 13-SECTION 1 20
INTRODUCTION 20
CHAPTER 13-SECTION 3 21
POWER DISTRIBUTION ASSEMBLY (PDA) 21
13.3.2 24-Volt Power Supplies 21
CHAPTER 13-SECTION 4 22
PIXEL MATRIX MODULE (PMM) 22
13.4.1 General and Mechanical 22
13.4.2 Communications 22
13.4.5 Power 23
CHAPTER 13-SECTION 5 24
SIGN CONTROLLER 24
CHAPTER 13-SECTION 11 25
SIGN STRUCTURE AND HOUSING 25
13.11.4 Sign Equipment Access Door 25
13.11.11 In-Sign Electrical Equipment Mounting Area 25
CHAPTER 13-SECTION 12 26
CONTROLLER GROUND CABINET 26

13.12.2 General Requirements 26
CHAPTER 13-SECTION 15 27
IN-SIGN NETWORK SWITCH 27
ERRATA NO.4 APPENDIX 29

CHAPTER 3
AUXILIARY CABINET SPECIFICATIONS

3.10.3.1. Unit Chassis

The unit chassis shall be vented. The power supply cage and transformers shall be securely braced to prevent damage in transit. The Model 700 Power Supply shall be provided with mounting brackets so that it can be securely mounted as shown in A1-27.

3.10.3.2. Unit Design

The unit shall provide +24 VDC to power the PMMs. The unit shall be a Switch-Mode design. It shall conform to the following requirements:

3.10.3.3. Input Protection

Cold Start Inrush Current shall be less than 25Apk at 115VAC. Three UL 1449 Varistors (MOVs), with a Nominal Discharge Current Rating (In) of 3kA shall be provided between AC+ to AC, AC+ to EG, and AC- to EG.

3.10.3.4. Output Protection

The output shall be over-current and short-circuit protected. Output could drop out of regulation (<95%) when output current is 105% to 130% of full load. The output shall also be protected against voltage transients by a suppressor with minimum rating of 1500 Watts.

3.10.3.5. Input fuses

Input fuse protection shall comply with IEC-60127.

3.10.3.6. Line and Load Regulation

Line and Load Regulation- shall not exceed +23 to + 25 VDC (4.2%) with a design voltage of +24 VDC at 50% load.

This includes ripple noise; from 90 to 135 VAC at 60 Hz, plus an additional 1.6% for each additional 1.0% frequency change; and current range from 1 to 5 Amperes with a maximum temperature rise of 86 ^{0}F above ambient.

3.10.3.7. Design Voltage

The power supply shall include an ORing Diode/FET and current sharing functionality. Design output +24.5 ± 0.1 VDC at 0.2A load and linearly drops to 23.5 ± 0.1 VDC at full load, 86 ^{0}F, 115 VAC incoming voltage.

3.10.3.8. Full Load Current

Full Load Current 20 Amperes each for +24 VDC, minimum.

3.10.3.9. Ripple Noise

Ripple Noise - 2 volts peak-to-peak and 500 mV RMS at full load.

3.10.3.10. Efficiency

Efficiency (at full load) - 80% minimum.

3.10.3.11. Power Factor Correction

The Model 700 Power Supply shall include power factor correction circuitry resulting in a minimum full load power factor of 0.98.

3.10.3.12. Circuit Capacitors

Circuit capacitors shall be rated for 35 volts minimum.

3.10.3.13. Front Panel and Terminals

The front panel shall include AC fuses, power ON light and test points for monitoring the output voltages at the upstream of the ORing Diode/FET. The unit including terminals shall be protected to prevent accidental contact with energized parts.

3.10.3.14. LED Indicators

LED indicators shall be provided on the Front Panel indicating AC Line input status and fuse integrity. The indicators shall also display output status of the 24VDC output.

CHAPTER 3-SECTION 11
AUXILIARY EQUIPMENT & HARNESS DETAILS

	Appendix
3.11.1 Model 200 Switch Pack & Model 204 & 205 Connector Details	A3-1
3.11.2 Model 208 Monitor Units	A3-2
3.11.3 Model 210 T170 Monitor Unit	A3-3
3.11.4 Model 210 T170 Monitor Unit & Programming Card &Connector Wiring Assignments	A3-4
3.11.5 C2 Modem Harness	A3-5
3.11.6 Model 206L Power Supply	A3-6
3.11.7 C11 Harness	A3-7
3.11.8 C2 Serial Harness	A3-8
3.11.9 C1 Harness	A3-9
3.11.10 Model 206LS Power Supply	A3-10
3.11.11 Model 280 Input File Ethernet Switch Unit	A3-11
3.11.12 C16 Railroad Harness	A3-12
3.11.13 Model 206E Power Supply	A3-13
3.11.14 Model 700 Power Supply	A3-14

CHAPTER 6-SECTION 8
332LS, 334LS, 336LS, 342LX, 344LX & 346LX CABINET DETAILS

Appendix

6.8.10	**Service Panel Assembly (SPA) Details sheet 1 of 3**	**A6-10**
6.8.11	**Service Panel Assembly (SPA) Details sheet 2 of 3**	**A6-11**
6.8.12	**Service Panel Assembly (SPA) Details sheet 3 of 3**	**A6-12**

CHAPTER 9-SECTION 1
GENERAL

9.1.1 Controller Unit

The Controller Unit shall be composed of the Unit Chassis, modules and assemblies per their version. The following is a list of 2070 Versions, their interface rolls and composition:

UNIT VERSION	DESCRIPTION
2070LX+ UNIT	LX + Unit mates to the 170 & ITS cabinets. It consists of: 2070 LX +UNIT CHASSIS, 2070-1C CPU, 2070-2E+ (2C if ITS CABINET), FI/O, 2070-3B FRONT PANEL, 2070- 4 POWER SUPPLY and Model 2070-LAN Module
2070E UNIT	LITE Unit mates to the 170 & ITS cabinets. It consists of: UNIT CHASSIS, 2070-1E CPU, 2070-2E+ (2C if ITS CABINET), FI/O, 2070-3B FRONT PANEL and 2070- 4 POWER SUPPLY
2070EC UNIT	LITE unit mates to ITS cabinets only. It consists of: UNIT CHASSIS, 2070-1E CPU, 2070-2C FI/O, 2070-3C FRONT PANEL and 2070-4 POWER SUPPLY
2070LX UNIT	LX Unit mates to the 170 & ITS cabinets. It consists of: UNIT CHASSIS, 2070-1C CPU, 2070-2E+ (2C if ITS CABINET), FI/O, 2070-3B FRONT PANEL and 2070- 4 POWER SUPPLY
Note: See Chapter 11 for 2070 NEMA Versions	

9.1.5 2070 Unit Module

2070 UNIT module / assembly power limitations shall be as follows:

Models	**+5VDC**	**+12VDC iso**	**+12VDC ser**	**-12 VDC ser**
2070-1E CPU	1.0 A	250 mA		
2070-1C, Host Board	2 A	250 mA		
2070-2A FI/O	250 mA	750 mA	-----	-----
2070-2B FI/O	250 mA	500 mA	-----	-----
2070-3A, B&D FPA	500 mA	-----	50 mA	50 mA
2070-3C FPA	500 mA	-----	50 mA	50 mA
2070-LX+Unit Chassis/A6	2 A	250 mA	-----	-----
2070-LX+Unit Chassis/A7	2 A	250 mA	-----	-----
2070-6A & Others	900 mA	-----	300 mA	300 mA
2070-7 All Comm	250 mA	-----	50 mA	50 mA
2070-LAN	1 A	--------	------	--------

CHAPTER 9-SECTION 2
MODEL 2070-1 CPU MODULE

9.2.1 Model 2070-1E CPU Module

9.2.4 2070-1E CPU Module

9.2.7 2070-1E CPU Module Software

9.2.3.6 Firmware Updates

Circuitry shall be included in the 2070 Unit that provides a bi-directional, asynchronous serial communications path from the CPU Module to microcontroller(s) in the Field I/O, Front Panel and Model 2070LX+ Serial Motherboard. Firmware shall be included on the main processor of the CPU Module, and all microcontrollers, that facilitates in-field firmware updates. As a minimum, the Field I/O processor and Front Panel processor shall be upgradeable via communications from the CPU Module.

The Field I/O processor shall use SP5 for the firmware upgrade path.
The Front Panel processor shall use SP6 for the firmware upgrade path.

CHAPTER 9-SECTION 5
MODEL 2070-4 POWER SUPPLY MODULE

9.5.5.1 AC Fail/Power Down Output Lines

The AC Fail/Power Down Output Lines shall go Low (ground true) immediately upon Power Failure. The Lines shall transition to High immediately after both Power Restoration and supply is fully recovered. The Lines shall be driven separately. The Sysreset/Powerup Output Lines shall transition to Low 525 +/-25 ms after AC Fail/Power Down transition to Low. The Lines shall transition to HIGH 225 +/- 25 ms after both Power Restoration and the supply is fully recovered (e.g. after +5 VDC is within the range specified in section 9.5.6). The Lines shall be driven separately.

The AC Fail Output line shall transition to High within 300 ms after a Cold Start of the power supply. Cold Start occurs when the power supply has been off line for 3 minutes or more.

9.5.6.11 Power Factor Correction

The Model 2070-4 Power Supply shall include power factor correction circuitry resulting in a minimum full load power factor of 0.96.

CHAPTER 9-SECTION 6
MODEL 2070LX + UNIT CHASSIS

9.6.1 General

The Chassis shall consist of the metal housing, Serial Motherboard, Back-plane Mounting Surface, Power Supply Module Supports, slot card guides, Wiring Harnesses, and Cover Plate(s). All external screws shall be countersunk and shall be Phillips flat head stainless steel type. The housing shall be treated with clear chromate and the slot designation labeled on the back-plane mounting surface above the upper slot card guide. The Chassis shall be cooled by convection only. The top and bottom pieces of the housing shall be slotted for vertical ventilation.

9.6.2 Serial Motherboard

Serial Motherboard shall function as support for its connectors, A1 to A5 and FP, and as the interface between the CPU and the dedicated modules/Front Panel carrying both serial communications, logic, and power circuits. The PCB shall be multi-layered, with one-layer plane assigned to DC Ground. A wiring harness PS2 shall be provided between the Model 2070-4 Power Supply and the Motherboard PCB (provide strain relief). Test points shall be provided on the FPA side of the Motherboard for PS2 lines. A wiring harness FP shall be provided, linking the Motherboard with the FPA.

9.6.3 Model 2070LX + Unit Chassis

The Model 2070-LX+ Unit Chassis shall be provided with ethernet network lines as shown in A9-14 and shall contain slots A6, 7 and 8.

The network switch ports resident in the Model 2070-LAN and inserted slot A8 shall be routed to the NetP5 ports of slots A1, A2, A4, A5, A6 and A7.

CHAPTER 9-SECTION 7
MODEL 2070 UNIT DETAILS

	Appendix
9.7.1 Model 2070 LX+ - Chassis Front View	A9-1
9.7.2 Model 2070 LX+- Chassis Rear View	A9-2
9.7.3 Model 2070 LX+ - Chassis Top View	A9-3
9.7.4 Model 2070 LX+ - Chassis Motherboard	A9-4
9.7.5 Model 2070 - Motherboard A1-A5 Connector Pinouts	A9-5
9.7.6 Model 2070 - System PCB Modules, General	A9-6
9.7.7 Model 2070 - 1E CPU Modules &Serial Port/SDLC Protocol	A9-7
9.7.8 Model 2070-2, Field I/0 Modules	A9-8
9.7.9 Model 2070-2A, Field I/O Module, C1 & C11 Connectors	A9-9
9.7.10 Model 2070-3A, 3B & D Front Panel Assembly	A9-10
9.7.11 Model 2070-3 FPA Key Codes	A9-11
9.7.12 Model 2070-3 FPA Display Codes	A9-12
9.7.13 Model 2070-4 Power Supply Module	A9-13
9.7.14 Model 2070LX+ Motherboard A6 – A7 Connector Pinouts	A9-14
9.7.15 Model 2070-1C CPU Module	A9-15
9.7.16 Model 2070 - Serial Port Descriptors Defaults	A9-16
9.7.17 Model 2070 - Power Failure Reaction	A9-17
9.7.18 Model 2070-LAN	A9-18

CHAPTER 10-SECTION 13
MODEL 2070-LAN MODULE

10.13.1 Model 2070-LAN Local Area Network Module

The Model 2070-LAN Module shall provide 8 ports for Network Communications to and from network modules in the Model 2070 Controller Ax Slots and the front panel.

An integrated Store-and-Forward 8 port Network Switch shall be used as the core for the Model 2070-LAN Module. A network ports from the switch residing in the Model 2070-LAN Module shall be used to route Ethernet Traffic across the Motherboard to the "Ax" Connector's Network Lines. DC Grounding around the network connectors and lines shall be provided. The Network Lines shall be assigned as: NetP5 TX+, TX-, RX+ and RX- respectively. One network port shall be brought to a RJ-45 Connector on the Faceplate.

The Model 2070-LAN Module shall be a Plug-in Card style version for the 2070 Controller.

A microcontroller shall be provided to allow for switch configurations including setting up VLANS and rate limiting on ports.

10.13.2 Mechanical/Electrical Requirements.

The Model 2070-LAN Modules card edge connector shall be fully compatible with the 2070 Controller's Motherboard Ax Card Slots.

The Model 2070-LAN Module shall be powered direct from the 2070 Controller's edge connector.

10.13.3 Model 2070-LAN Module Requirements

The Model 2070-LAN shall be provided with Network Magnetics for each port.

10.13.4 Network Standards

The Model 2070-LAN Module shall meet the IEEE802.3 10Base-T, IEEE 802.3u, and IEEE 802.3x.

10.13.5 Modes of Operation

The Model 2070-LAN Module shall have auto-negotiation for 10/100 Mbps connection speed and Half/Full-Duplex modes on the RJ-45 port.

The Model 2070-LAN Module shall be provided with Auto-MDIX for the RJ-45 port.

The network ports routed to the Controller's Motherboard shall have Auto-negotiation for 10/100Mbps connection speed.

10.13.6 Network Media Support

The Model 2070-LAN Module shall be configured as a Multiple Channel Media Converter to route network traffic between network modules in the Ax Slots and the RJ-45 Faceplate Connector.

The Model 2070-LAN Module shall support the following Media:

100Baset-TX: Cat. 5, EIA/TIA-568B, 100-Ohm UTP cables.

10.13.7 LED Indicators

The Model 2070-LAN Module shall be provided with an RJ-45 Connector containing Link/Activity and 10/100 Speed LED indicators. Network Link/Activity and 10/100 Speed indicators for the port routed to the Controller's Motherboard shall be provided on the Face Plate of the Model 2070-LAN Module as shown in A9-18

10.13.8 Form Factor

See A10-13 for Details

10.13.9 Power Requirements

The power requirements of the 2070-LAN Module be within the power limitations of the Model 2070 Unit as describe in Section 9.2.5 of these specifications.

Models	**5 VDC**	**+12 VDC iso**	**+12 VDC ser**	**-12 VDC ser**
2070-LAN	1 A			

10.13.10 Environmental

The 2070-LAN Module shall operate within the specifications listed in Chapter 1 Section 1.8.4.

CHAPTER 12-SECTION 2
OPERATION

12.2.6 Transfer Time

The maximum transfer time allowed, from disruption of normal utility line voltage to stabilized Backup Mode line voltage, shall be no greater than 40 milliseconds. The same maximum allowable transfer time shall also apply when switching from Backup Mode line voltage back to utility line voltage.

CHAPTER 13-SECTION 1
INTRODUCTION

13.1.7 OSI layers 1 and 2

All OSI layer 1 and 2 module communications interfaces shall support 10/100baseTX Ethernet that complies with all current IEEE 802.3i, 802.3u, 802.3x standards.

13.1.9 Spare Parts

The following spare item(s) shall be included per each delivered Model 700, 700C, 710, 710C, 720, or 720C CMS System.

1. Pixel Matrix Modules (PMM)

Two (2) Pixel Matrix Modules (PMM)

2. Test Box

One (1) Test box as referenced in Chapter 13, Section 9

3. Remote I/O Unit

One (1) Remote I/O Unit as referenced in Chapter 13, Section 8

4. In-Sign Ethernet Switch

One (1) In-sign Ethernet Switch as referenced in Chapter 13, Section 15

CHAPTER 13-SECTION 3
POWER DISTRIBUTION ASSEMBLY (PDA)

13.3.2 24-Volt Power Supplies

1. 24VDC Power Supplies

The CMS Model 700 Series shall have installed seven (7) 24-volt power supplies numbered 1 through 7. Power supplies shall be industrial-safe with wide operating temperature range between -20°C and 70°C or better.

2. 24VDC Power Supplies #1 and #2

24VDC power supplies #1 and #2 shall supply power to the top row of PMM's via 24VDC bus or buses. Individual power cable harness used to connect each of the PMM is to be soldered to a 24VDC bus or buses. The solder joint is to be sealed and protected

3. 24VDC Power Supplies #3 and #4

24VDC power supplies #3 and #4 shall supply power to the top row of PMM's via 24VDC bus or buses. Individual power cable harness used to connect each of the PMM is to be soldered to a 24VDC bus or buses. The solder joint is to be sealed and protected

4. 24VDC Power Supplies #5 and #6

24VDC power supplies #4 and #5 shall supply power to the top row of PMM's via 24VDC bus or buses. Individual power cable harness used to connect each of the PMM is to be soldered to a 24VDC bus or buses. The solder joint is to be sealed and protected

CHAPTER 13-SECTION 4
PIXEL MATRIX MODULE (PMM)

13.4.1 General and Mechanical

1. PMM components

A. Each PMM shall contain an integrated store-and-forward 3-port network switch per the IEEE 802.3, 802.3u, and 802.x specifications. Ports 1 and 2 shall be routed to a corresponding RJ45 connector via Magnetics. The third port shall be routed to the PMM processor.

B. Each PMM shall consist of display pixel LEDs, diagnostic circuitry that provides feedback to the Sign Controller on the PMM health and pixel status, and connector header for 24VDC power. The 24VDC power connector header is to be of Type VH, 4-position locking header, 3.96mm pitch for Disconnect Crimp style connectors

5. PMM Guiding / Alignment pins

Each PMM shall have four (4) guiding / alignment pins for alignment and ease of installation & removal of PMM from the sign's structural ribs.

15. PMM Compatibility and Upgradability

The Model 700C PMMs shall allow for upgrading of Caltrans Amber PMMs to Color.

13.4.2 Communications

4. PMM's address DIP switch

Each PMM shall have the lowest octet of its IP Address selectable with one 8-bit DIP switch. The Least Significant Bit (LSB) is to be the last switch on the right of the DIP switch as it is facing its viewer.

5. PMM's DIP switch address map on sign face

PMM address set through address DIP switch is to follow the below convention as PMM's are arranged from left to right on the CMS sign face:

- First PMM of top row starts at 1 and step up by 1 increasement horizontally through the last PMM on this row
- First PMM of middle row starts at 31 and step up by 1 increasement horizontally through the last PMM on this row
- First PMM of bottom row starts at 61 and step up by 1 increasement horizontally through the last PMM on this row

13.4.5 Power

4. Circuit protection

The supply input circuit of each PMM shall be fused with surface-mount fuse. Use PCB reference designator F1 for this fuse.

CHAPTER 13-SECTION 5
SIGN CONTROLLER

13.4.6 System Default Internet Protocol (IP) Addresses

1. **Internet protocol (IP) Assignment**

The default IP addresses shall be:

A. PMM (Row 1) 192.168.110.1 through 192.168.110.21
B. PMM (Row 2) 192.168.110.31 through 192.168.110.51
C. PMM (Row 3) 192.168.110.61 through 192.168.110.81
D. Sign Controller (Ethernet Port #1) 192.168.110.200
E. Sign Controller (Ethernet Port #2) 192.168.1.100
F. Remote I/O Box 192.168.110.204
G. Test Box 192.168.110.205
H. Ethernet switch 10/100baseTX (Quantity 1)

Network Mask:	255.255.255.0
Default Gateway:	Leave Blank
IP Address:	192.168.110.101

CHAPTER 13-SECTION 11
SIGN STRUCTURE AND HOUSING

13.11.4 Sign Equipment Access Door

1. Access door

The CMS housing shall have one (1) access door, EITHER a left OR a right access door as specified by purchase order. This access door shall provide access to the Sign Equipment Rack, the 24 Volt Power Supplies, all other required components, and ground cabinet termination points without the removal of any Pixel Matrix Modules.

3. Door hinge

Access door hinge shall be a one-piece continuous hinge located on the inside edge along the left or right contrast border.

13.11.11 In-Sign Electrical Equipment Mounting Area

2. Electrical equipment

CMS Model 700 Series shall include the minimum electronic equipment mounted in the Sign Electrical Equipment Mounting Area:

A. Power Distribution Assembly (PDA)
B. Remote Input/Output (I/O) Box
C. Industrially-rated 10/100baseTX Ethernet Switches
D. Industrially-rated Ethernet Switch (Spare, tested unplugged from all cables)
E. 24-Volt Power Supplies

CHAPTER 13-SECTION 12
CONTROLLER GROUND CABINET

13.12.2 General Requirements

1. CMS ground cabinet

The CMS system shall include a cabinet Model 334LS, which will be mounted nearby on the ground to provide connectivity with the CMS's in-sign equipment rack.

2. Electronic equipment

The CMS 700/700c series system shall include the minimum electronic equipment mounted or installed in the Model 334LS ground cabinet:

A. Industrially-rated Sign Controller
B. Test Box
C. Model 280 Input File Ethernet Switch Unit
D. A 4-port minimum Remote Power Switch with LAN/WAN/Web and Phone control capability (Example: Ambery Corporation Model IP-P3 or equivalent)
E. One (1) spare Remote I/O unit and one (1) spare Test Box are to be rack mounted in the free rack spaces at the bottom most of the 334LS cabinet.
F. Quantity of three (3) approximately 300-feet long CAT-6A ethernet cables are to be wrapped & secured inside the ground cabinet. These cables are to be used to make connections between the ground cabinet and the CMS Sign at time of CMS Sign Installation. (See Drawing A1-29).

CHAPTER 13-SECTION 15
IN-SIGN NETWORK SWITCH

13.15.1 General Requirements

1. **Ethernet switch type and capability**

Industrially-rated hardened Layer-3 Gigabit managed ethernet switch that supports ring protocols for fault tolerant operation.

2. **Cooling and temperature range**

Fanless cooling only with -40 to 70°C operating temperature range.

13.15.2 Ethernet Interface

1. **Number of ports**

10/100/1000Base T(X) Ports (RJ45): Minimum 16 ports
100/1000Base SFP Ports: Minimum 4 ports

2. **The In-Sign Network Switch shall comply to the following standards:**

IEEE 802.1D-2004 for Spanning Tree Protocol
IEEE 802.1p for Class of Service
IEEE 802.1Q for VLAN Tagging
IEEE 802.1s for Multiple Spanning Tree Protocol
IEEE 802.1w for Rapid Spanning Tree Protocol
IEEE 802.1X for authentication
IEEE 802.3 for 10BaseT
IEEE 802.3ab for 1000BaseT(X)

13.15.3 Advanced Security

The In-Sign Network Switch shall provide the following security features as a minimum:
Static and dynamic port security
Authentication: SNMPv3, 802.1x, RADIUS, TACACS+ AAA/3.0, web and MAC
Encryption: MD5, TLS, TTLS, TACACS+ AAA/3.0
Access Control List (ACL) per IP/MAC/VLAN/TCP/UDP
Secure Web (HTTPS/SSL) and Telnet (SSH)
Rate limiting and multicast storm protection
IP Source Guard, DHCP Snooping and Option 82

13.15.4 Active and Spare Ethernet Switches

Each CMS Model 700 Series sign will include 2 identical ethernet switches. One of the 2 switches will be ACTIVE (i.e. in use) and the other a SPARE. Both switches shall be configured

identically. Like the ACTIVE switch, the SPARE switch is to be tested for full functionality, then unplugged from all cables including the power source until such time that it needs to be used as a replacement for the failed ACTIVE switch

13.15.5 Rack Mounting

1. Mounting

The Ethernet Switch shall be mounted on a to the CMS Model 700 Series sign using a mounting rail as specified in IEC 60715 or shall include a complete set of hardware which allows the switch to be mounted in an EIA 19-inch rack cage.

ERRATA NO.4 APPENDIX

	Appendix
Model 700 Power Supply	A3-14
BBS Utility Power Connection Diagram	A4-1
Service Panel Assembly (SPA) Details Sheet 1 of 3	A6-10
Service Panel Assembly (SPA) Details Sheet 2 of 3	A6-11
Service Panel Assembly (SPA) Details Sheet 3 of 3	A6-12
PDA #2LX, #2LS & #3LX Details Sheet 5 of 8	A6-17
Side Panel Details Sheet 1 of 4	A6-21
Harness Wiring Diagram Sheet 1 of 5	A6-25
Input/output File #1LX Details Sheet 3 of 12	A6-45
Input/output File #1LX Details Sheet 4 of 12	A6-46
Input/output File Details Sheet 7 of 12	A6-49
Input/output File #2LX Details Sheet 12 of 13	A6-54
Model 2070LX+ Chassis Front View	A9-1
Model 2070LX+ Chassis Rear View	A9-2
Model 2070LX+ Chassis Top View	A9-3
Model 2070LX+ Chassis Motherboard	A9-4
Model 2070LX+ Chassis A6 to A7 Connector Pin Out	A9-14
Model 2070-LAN Connector Pinout	A9-18
Model 2070-LAN 2070 Local Area Network Module	A10-13
GT-BBS Utility Power Connection Diagram	A12-2
GT-BBS Battery Interface	A12-4
GT-BBS Harness	A12-5
CMS MODEL 700 SERIES SYSTEM BLOCK DIAGRAM WITH GROUND CABINET	A1-1
MODEL 700 CMS OF MODEL 700 SERIES SYSTEM HOUSING DETAIL, FRONT AND SIDE VIEWS	A1-5
MODEL 710 CMS OF MODEL 700 SERIES SYSTEM HOUSING DETAIL, FRONT AND SIDE VIEWS	A1-10
MODEL 720 CMS OF MODEL 700 SERIES SYSTEM HOUSING DETAIL, FRONT AND SIDE VIEWS	A1-14
PIXEL MATRIX MODULE, TYPE 1 FRONT AND REAR VIEWS	A1-17
PIXEL MATRIX MODULE, TYPE 1 END VIEW	A1-18
PIXEL MATRIX MODULE, TYPE 2 FRONT AND REAR VIEWS	A1-19
PIXEL MATRIX MODULE, TYPE 2 END VIEW	A1-20
CMS MODEL 700 SERIES POWER DISTRIBUTION ASSEMBLY BLOCK DIAGRAM	A1-26
19” EQUIPMENT RACK	A1-27
CMS MODEL 700 SERIES SYSTEM WIRING DIAGRAM	A1-29
PIXEL MATRIX MODULE, TYPE 3 FRONT, SIDE, AND REAR VIEWS	A1-30
PIXEL MATRIX MODULE, TYPE 4 FRONT, SIDE, AND REAR VIEWS	A1-31

MODEL 700 POWER SUPPLY MODULE

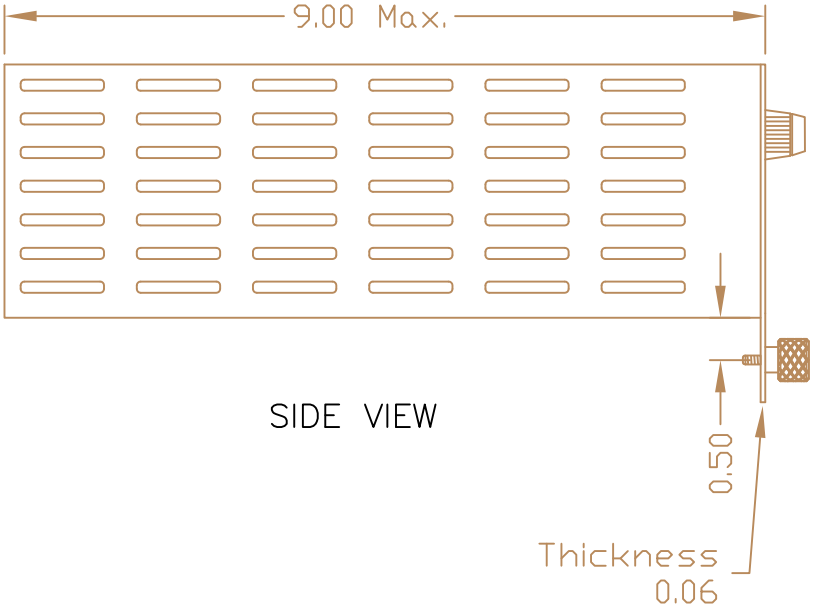

SIDE VIEW

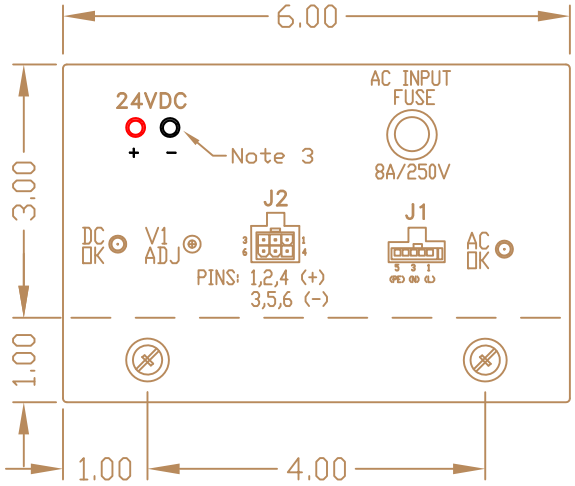

FRONT VIEW

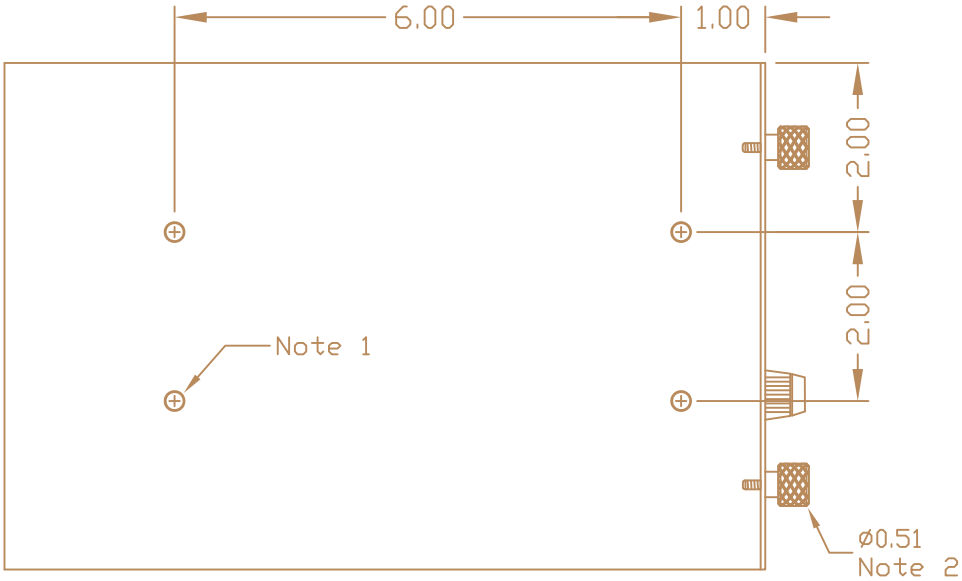

BOTTOM VIEW

NOTE:
1. M4X0.7P Thread, 4X Mounting locations, bottom.
2. TSD: Southco #47-62-381-20.
3. 24VDC+ "RED", 24VDC- "BLACK".
4. All dimensions shown are in inches.

TITLE: MODEL 700 POWER SUPPLY	
ERRATA 4	NO SCALE
TEES 2009	A3-14

BBS Utility Power Connection Diagram

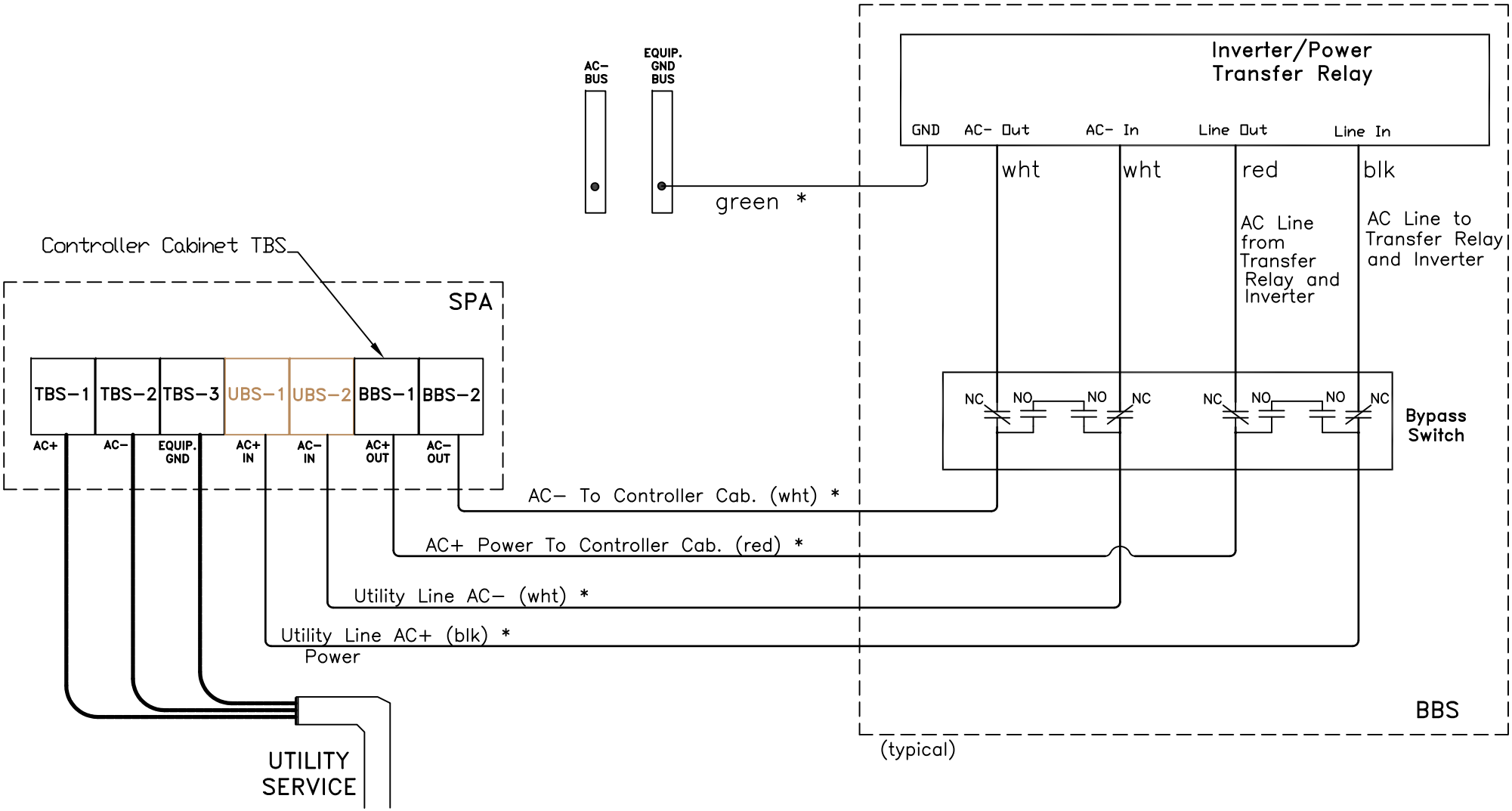

Note:

1. See A6-12 for conductor insulation colors and definitions.
2. All dimensions shown are in inches.

* As a minimum, these wires shall be provided in 9 ft lengths as part of the interconnect wiring kit.

TITLE:	BBS Utility Power Connection Diagram	
	ERRATA 4	NO SCALE
	TEES 2009	A4-2

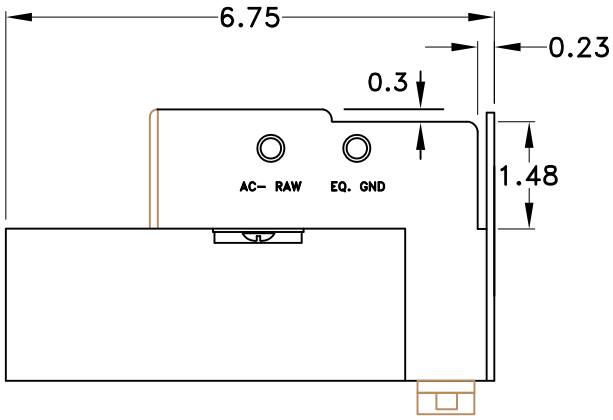

TOP VIEW

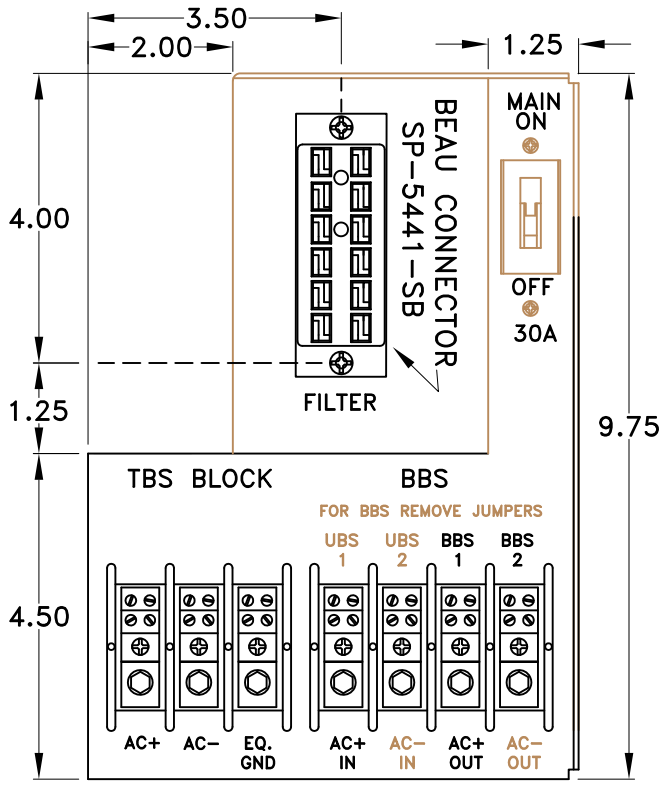

FRONT VIEW

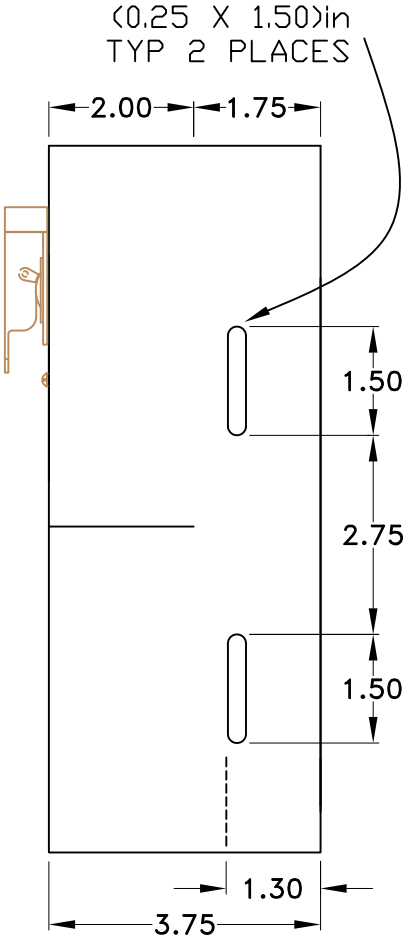

SIDE VIEW

NOTE:

All dimensions shown are in inches.

TITLE: SERVICE PANEL ASSEMBLY (SPA) DETAILS SHEET 1 OF 3	
ERRATA 4	NO SCALE
TEES 2009	A6-10

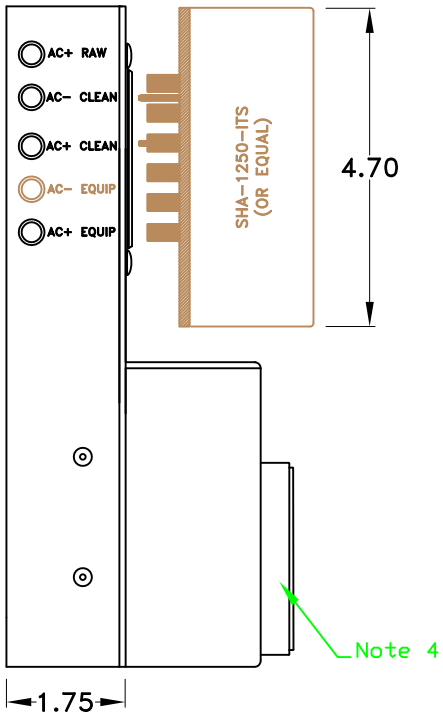

SIDE VIEW

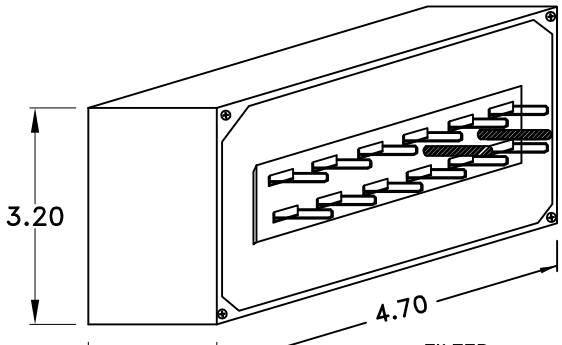

FILTER
(MODEL SHA−1250−ITS OR EQUAL)

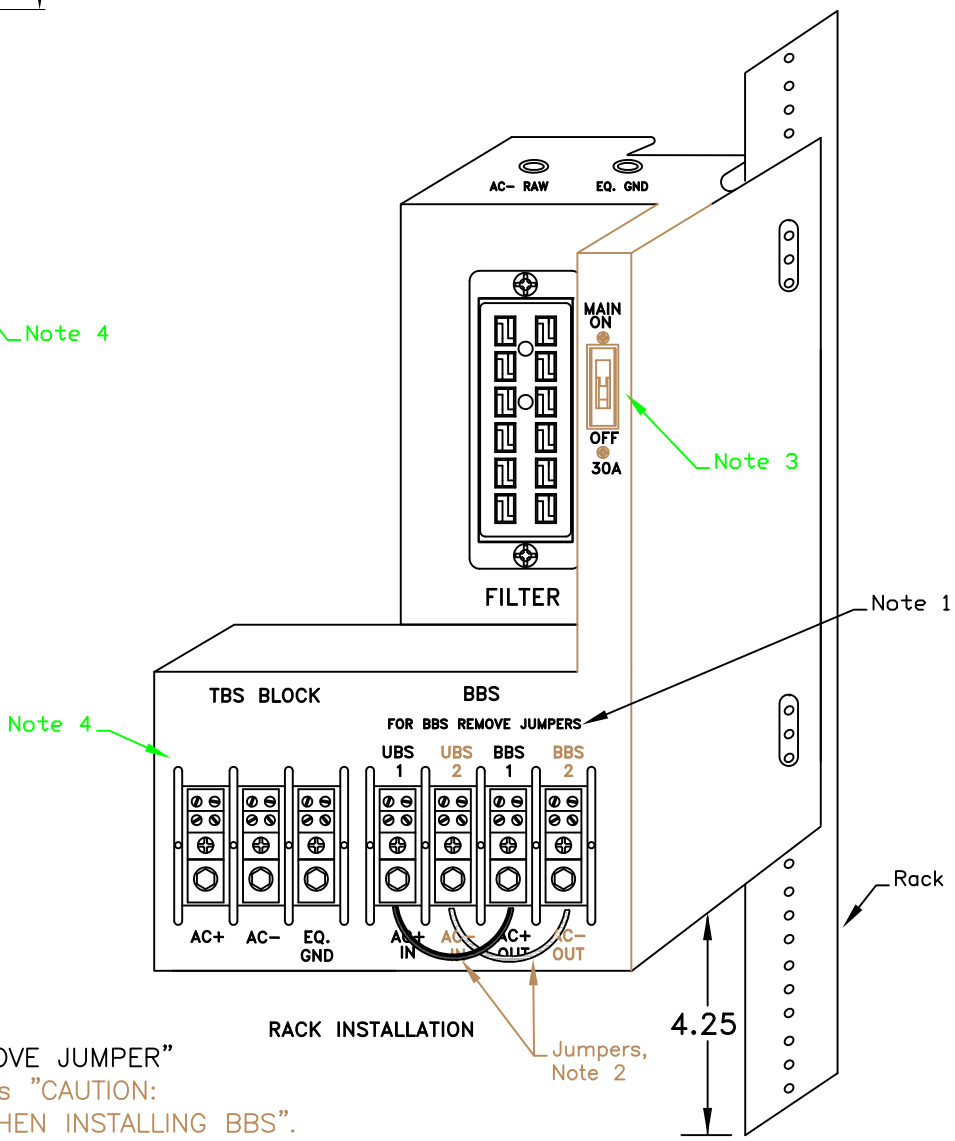

RACK INSTALLATION

NOTES: (FOR THIS DETAIL)

1. Place label "FOR BBS REMOVE JUMPER"
2. Attach red tags on jumpers "CAUTION: REMOVE THESE JUMPERS WHEN INSTALLING BBS".
3. See Switch Guard details, sheet A6−60
4. Clear plastic cover shall protect the terminal blocks.
5. The SPA shall be mounted at least 4.25in above the bottom of the cabinet shelf, except the 336LS.
6. All dimensions shown are in inches.

TITLE: SERVICE PANEL ASSEMBLY (SPA) DETAILS SHEET 2 OF 3	
ERRATA 4	NO SCALE
TEES 2009	A6−11

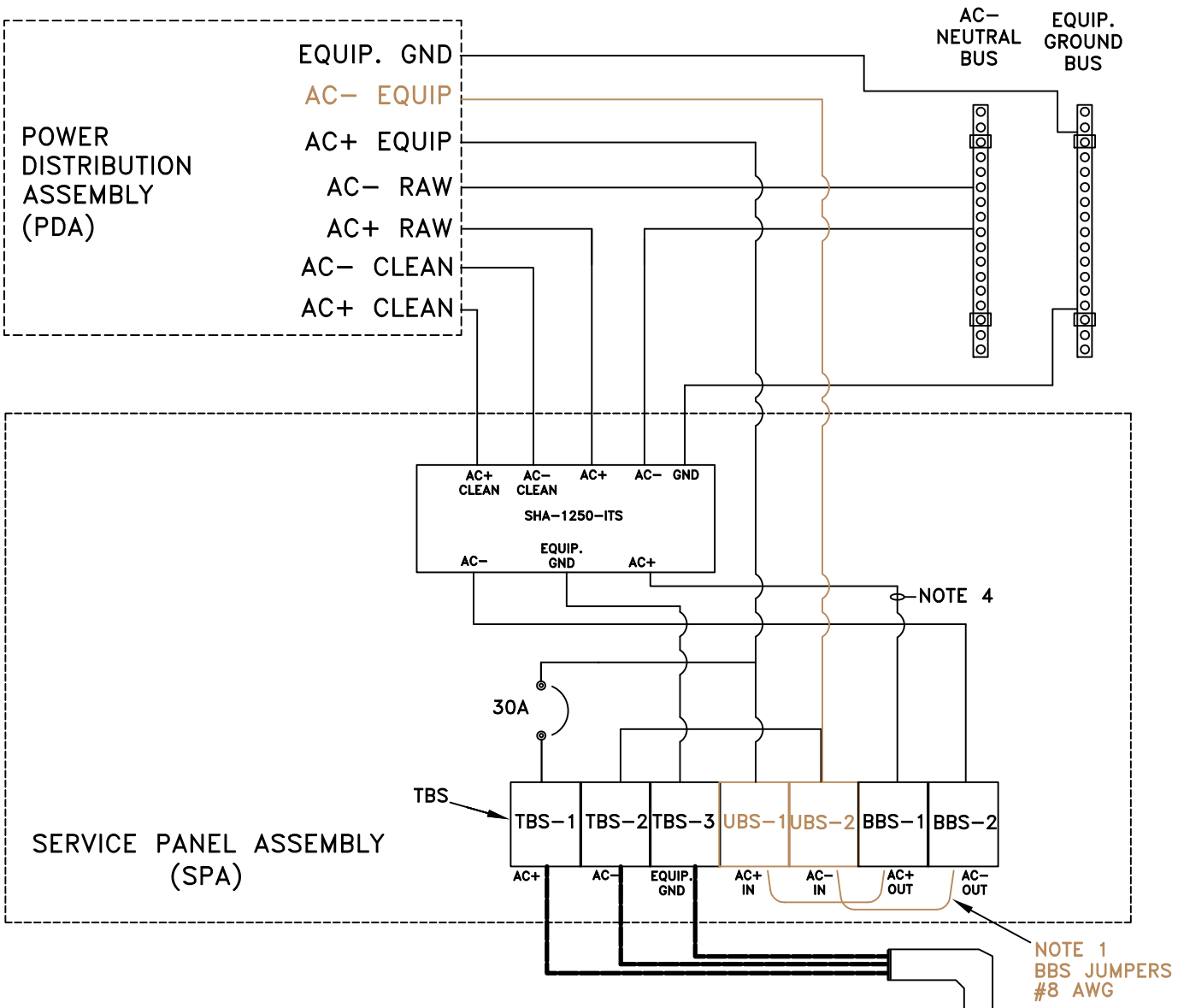

SHA−1250−ITS CONNECTOR DETAIL

PIN	FUNCTION	PIN	FUNCTION
1	AC+ RAW	2	AC+ RAW
3	EQ. GND	4	EQ. GND
5	AC+ CLEAN	6	AC+ RAW
7	AC− CLEAN	8	NA
9	EQ. GND	10	EQ. GND
11	AC− RAW	12	AC− RAW

BEAU S−5412

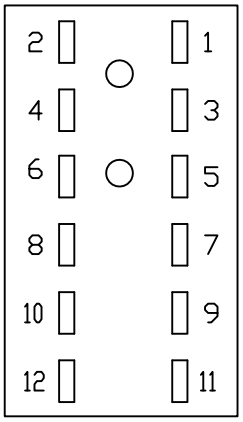

REAR VIEW

NOTE:

BBS = Battery Back−up System
TBS = Terminal Block Service
UBS = Utility to BBS

1. Remove jumper when connecting BBS.
2. SHA−1250−ITS connector BEAU S−5412 or equivalent.
3. Surge protection shall be provided of indicators
   GREEN LED Indicator ON= ok, OFF= error.
   YELLOW LED ON= error, Off= ok.
4. Red insulation conductor

TITLE: SERVICE PANEL ASSEMBLY (SPA) DETAILS SHEET 3 OF 3	
ERRATA 4	NO SCALE
TEES 2009	A6−12

POWER DISTRIBUTION ASSEMBLY TERMINAL BLOCK ASSIGNMENT DETAIL

PDA's	2LX, 2LS	2LX, 2LS	3LX	2LX, 2LS & 3LX	2LX,2LS	3LX
TERMINAL BLOCK	T1	T2		T3	T4	
SIDE / POS	A B	A B	A B	A B	A B	A B
1.	EG BUS / EG	EQ AC– UBS–2 / ER AC–	EG BUS / EQ GND	24VDC BUS / PS–7	NA / NA	FL1 / SP 3–3
2.	AC– BUS / AC–	01–5 / FU1–7	AC– BUS / AC–	24VDC (CONTROLLED) / PS–7	NA / NA	FL2 / SP 3–5
3.	CR AC– / AC– CLEAN	01–6 / FU1–8	* / AC+ RAW	DC GND BUS / PS 8	NA / NA	FL3 / SP 3–7
4.	* / SCB CKT 5	01–7 / FU2–7	* / AC+ CLEAN	DC GND BUS / PS–8	NA / NA	FL4 / SP 2–3
5.	* / AC+ RAW	01–8 / FU2–8	* / MU		NA / NA	FL5 / SP 2–5
6.	CR AC+ / AC+ CLEAN	* / FTR DRIVE	* / TR COIL		NA / NA	FL6 / SP 2–7
7.	* / SSR	01–1 / SCB CKT 1	NA / TRC1NO		NA / NA	FL7 / SP 1–3
8.	* / SCB CKT 6	01–2 / SCB CKT 2	NA / TRC2NC		NA / NA	FL8 / SP 1–5
9.	* / FCB1 (SEC)	01–3 / SCB CKT 3	03–5 / FLD2		NA / NA	FL9 / SP 1–7
10.	* / ER AC+	01–4 / SCB CKT 4	SPA AC– CLEAN / AC– CLEAN		NA / NA	EQ / ER AC– AC– UBS–2

A = EXTERNAL SIDE B = INTERNAL SIDE * = WIRE PER ONE LINE DIAGRAM

NOTES: (FOR DETAILS A6–13 TO A6–17)

1. All dimensions shown are in inches.
2. Sheet Definitions:

CKT = CIRCUIT	EG = EQUIPMENT GROUND
FLD1 = FIELD 1 CIRCUIT BREAKER	FL1 = FIELD LOAD 1
FU1–7 = FLASHER UINT #1, PIN 7	ER = EQUIPMENT RECEPTACLE
L = LAMP	LD CKT#1 = LOAD CIRCUIT 1
SSR = SOLID STATE RELAY	CR = CONTROLLER RECEPTACLE
MN = MAIN	MU–22 = MONITOR UNIT – PIN 22
OD = OUTSIDE DIMENSION	POS = POSITION
PS–7 = POWER SUPPLY PIN 7	SCB = SIGNAL CIRCUIT BREAKER
SP 3–3 = SWITCH PACK 3, PIN 3	TR = TRANSFER RELAY
01–8 = OUTPUT FILE TB 01, POSITION 8	TRC1NO = TRANSFER RELAY CIRCUIT 1, NORMALLY OPEN
FCB1 = FIELD CIRCUIT BREAKER 1	
EQ = EQUIPMENT	

3. Thumb screw device.
4. Transfer relay in PDA #2LX, #2LS & #3LX shall extend no more than 1.0 inch out from the assembly front face.
5. Slack shall be provided in the wiring for the circuit breakers and GFCI receptacle to allow for the removal and repair. Excess bends and stress on the wiring shall be minimized.
6. See Output File plan sheet for heavy duty relay and switch pack wiring assignments and connector mounting location.
7. Wiring shall be routed (with extra length) to minize movement when front panel door is opened. The wiring going to the front panel shall be routed such that it does not cause undue twisting or bending of the wires.
8. No ventilation hole shall be large enough to place a 0.375 inch diameter object through.
9. If PDA #2LX or #2LS is installed, park the C1 harness #1 – C5S connector at the Input Panel's C5P. If PDA #3LX is intalled, the C1 harness #2 – C5S connector shall be connected to the PDA's C6P connector, support bracket and wiring shall be installed.
10. Hing shall fasten to PDA chassis with two acorn Stainles Steel nuts.
11. Terminal shall be 5–pin screw type, Weidmuller BLT–C10 or equivalent.

TITLE: PDA #2LX, #2LS & #3LX DETAILS SHEET 5 OF 8	
ERRATA 4	NO SCALE
TEES 2009	A6–17

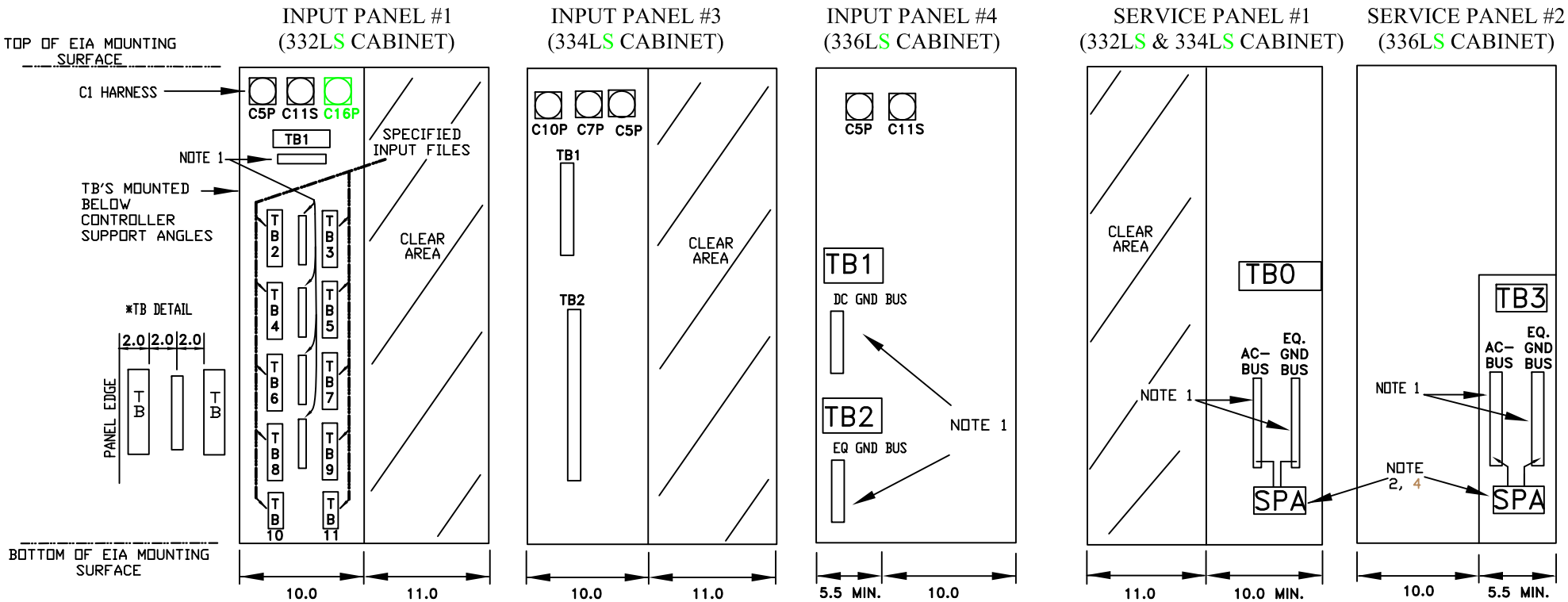

NOTES:

1. 10 terminal (#8 wire) minimum copper bus.
2. See service panel assembly details A6–10, A6–11 & A6–12.
3. The terminal block shall have terminal positions necessary to match position assignments. Terminal position screws shall be 8–32 except for TBS, TB0, TB0, TB3, which shall be 10–32
4. SPA shall be bolted on the Rail and firmly attached to the Service Panel.
5. All dimensions shown are in inches.

TITLE: SIDE PANEL DETAILS SHEET 1 OF 4	ERRATA 4	TEES 2009
	NO SCALE	A6–21

C1 HARNESS WIRING LIST #1

PIN	SOURCE	DESTINATION	FUNCTION	PIN	SOURCE	DESTINATION	FUNCTION
1	DC GND	DC GND BUS	–	53	I2-7	IFI-11W	SPARE #1
2	O1-1	C4-1	SWPK 4P-RED	54	I2-8	IFJ-11F	EVB
3	O1-2	C4-2	SWPK 4P-GRN	55	I3-1	IFJ-1F	5 CE
4	O1-3	C4-3	SWPK 4-RED	56	I3-2	IFI-1F	1 CE
5	O1-4	C4-4	SWPK 4-YEL	57	I3-3	IFJ-5F	7 CE
6	O1-5	C4-5	SWPK 4-GRN	58	I3-4	IFI-5F	3 CE
7	O1-6	C4-6	SWPK 3-RED	59	I3-5	IFJ-9F	5 CE
8	O1-7	C4-7	SWPK 3-YEL	60	I3-6	IFI-9F	1 CE
9	O1-8	C4-8	SWPK 3-GRN	61	I3-7	IFJ-9W	7 CE
10	O2-1	C4-9	SWPK 2P-RED	62	I3-8	IFI-9W	3 CE
11	O2-2	C4-10	SWPK 2P-GRN	63	I4-5	IFI-3F	2 CE
12	O2-3	C4-11	SWPK 2-RED	64	I4-6	IFJ-3F	6 CE
13	O2-4	C4-12	SWPK 2-YEL	65	I4-7	IFI-7F	4 CE
14	DC GND	IFI-15-4	INPUT DC GND	66	I4-8	IFJ-7F	8 CE
15	O2-5	C4-13	SWPK 2-GRN	67	I5-1	IFI-12F	2 PED
16	O2-6	C4-14	SWPK 1-RED	68	I5-2	IFI-13F	6 PED
17	O2-7	C4-15	SWPK 1-YEL	69	I5-3	IFI-12W	4 PED
18	O2-8	C4-16	SWPK 1-GRN	70	I5-4	IFI-13W	8 PED
19	O3-1	C4-17	SWPK 8P-RED	71	I5-5	IFJ-12F	EVA / APP
20	O3-2	C4-18	SWPK 8P-GRN	72	I5-6	IFJ-13F	EVB / SIM PRI
21	O3-3	C4-19	SWPK 8-RED	73	I5-7	IFJ-12W	EVC / GD,ISL
22	O3-4	C4-20	SWPK 8-YEL	74	I5-8	IFJ-13W	EVD / SIM SEC
23	O3-5	C4-21	SWPK 8-GRN	75	I6-1	IFJ-11W	SPARE #3
24	O3-6	C4-22	SWPK 7-RED	76	I6-2	IFI-3W	2 CE
25	O3-7	C4-23	SWPK 7-YEL	77	I6-3	IFJ-3W	6 CE
26	O3-8	C4-24	SWPK 7-GRN	78	I6-4	IFI-7W	4 CE
27	O4-1	C4-25	SWPK 6P-RED	79	I6-5	IFJ-7W	8 CE
28	O4-2	C4-26	SWPK 6P-GRN	80	I6-6	IFI-11F	ADVANCE
29	O4-3	C4-27	SWPK 6-RED	81	I6-7	IFI-14F	FLASH SENSE
30	O4-4	C4-28	SWPK 6-YEL	82	I6-8	IFI-14W	STOP TIME
31	O4-5	C4-29	SWPK 6-GRN	83	O6-1	C5-1	SWPK 14-RED N/A
32	O4-6	C4-30	SWPK 5-RED	84	O6-2	C5-2	SWPK 14-GRN N/A
33	O4-7	C4-31	SWPK 5-YEL	85	O6-3	C5-3	SWPK 13-RED
34	O4-8	C4-32	SWPK 5-GRN	86	O6-4	C5-4	SWPK 13-YEL
35	O5-1	C4-33	SWPK 2P-YEL	87	O6-5	C5-5	SWPK 13-GRN
36	O5-2	C4-34	SWPK 6P-YEL	88	O6-6	C5-6	SWPK 12-RED
37	O5-3	C4-35	SWPK 4P-YEL	89	O6-7	C5-7	SWPK 12-YEL
38	O5-4	C4-36	SWPK 8P-YEL	90	O6-8	C5-8	SWPK 12-GRN
39	I1-1	IFI-2F	2 CE	91	O7-1	C5-9	SWPK 11-RED HS
40	I1-2	IFJ-2F	6 CE	92	DC GND	DC GND BUS	–
41	I1-3	IFI-6F	4 CE	93	O7-2	C5-10	SWPK 11-GRN GPO2
42	I1-4	IFJ-6F	8 CE	94	O7-3	C5-11	SWPK 10-RED
43	I1-5	IFI-2W	2 CE	95	O7-4	C5-12	SWPK 10-YEL
44	I1-6	IFJ-2W	6 CE	96	O7-5	C5-13	SWPK 10-GRN
45	I1-7	IFI-6W	4 CE	97	O7-6	C5-14	SWPK 9-RED
46	I1-8	IFJ-6W	8 CE	98	O7-7	C5-15	SWPK 9-YEL
47	I2-1	IFI-4F	2 CALL	99	O7-8	C5-16	SWPK 9-GRN
48	I2-2	IFJ-4F	6 CALL	100	O5-5	C5-17	SWPK 14-YEL N/A
49	I2-3	IFI-8F	4 CALL	101	O5-6	C5-18	SWPK 11-YEL GPO1
50	I2-4	IFJ-8F	8 CALL	102	O5-7	IFI&J-15-3	DETECTOR RESET
51	I2-5	IFJ-14F	RR1 PRE / ADV. PRI	103	O5-8	C4-37	WDT-MU
52	I2-6	IFJ-14W	RR2 PRE / ADV. SEC	104	DC GND	IFJ-15-4	INPUT DC GND

TITLE: HARNESS WIRING DETAILS SHEET 1 OF 5	
ERRATA 4	NO SCALE
TEES 2009	A6-25

OUTPUT FILE #1LX DETAIL

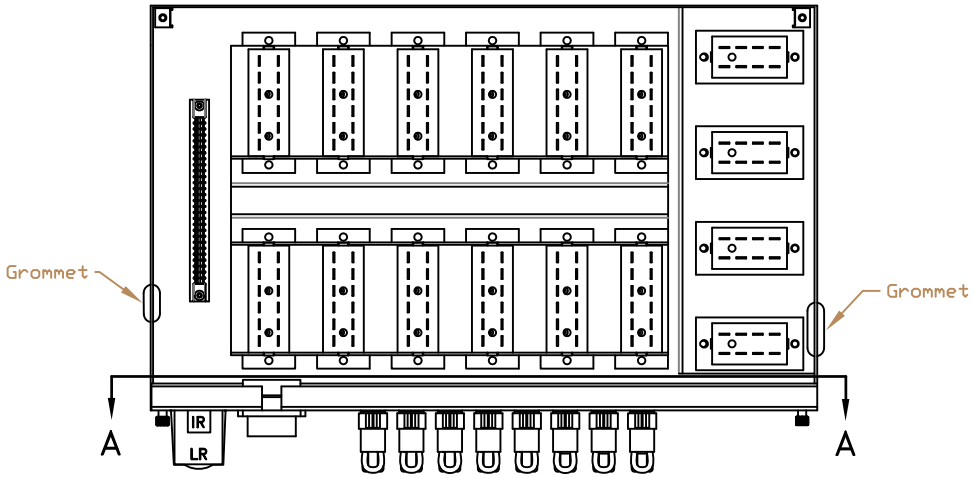

REAR VIEW
(BACK PANEL - OPEN)

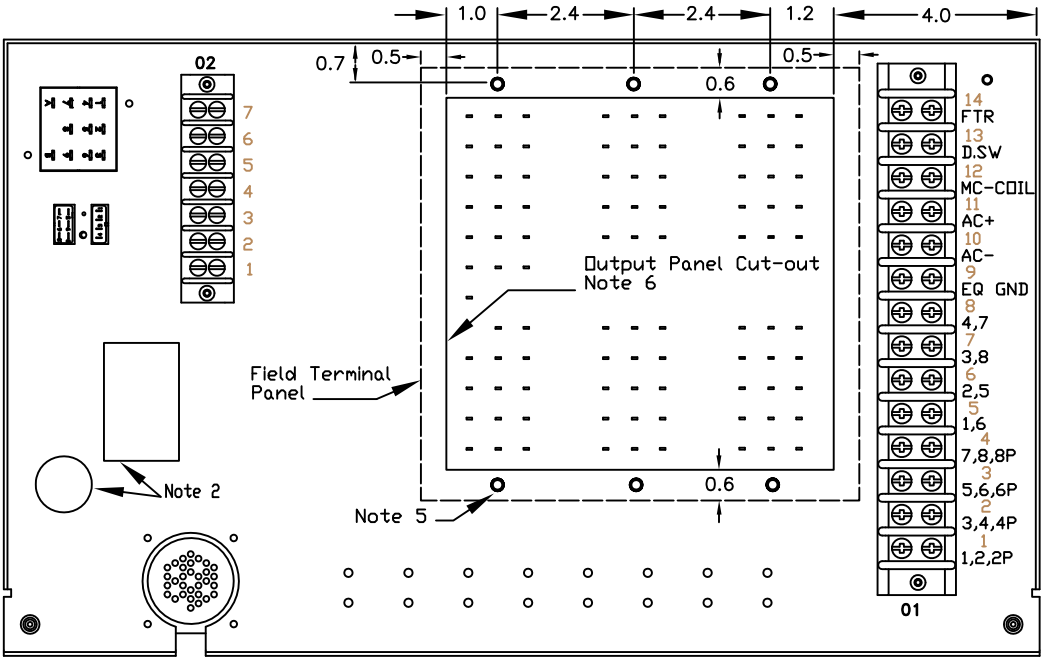

VIEW A-A

NOTE:

1. Thumb screws device
2. Panel stamped for OL Monitor Input Cable and Red Monitor Program Board, but board not installed.
3. For Terminal Assignment, see Output File #1 detail.
4. See A6-49, A6-53 & A6-61 for sheets 7, 11, & 12.
5. Holes 0.2 Dia. for Field Terminal Panel & Output Panels.
6. Cut-out Height = 7 – 7.3, Width = 7
7. All dimensions shown are in inches

TITLE: INPUT/OUTPUT FILE #1LX DETAILS SHEET 3 OF 12	
ERRATA 4	NO SCALE
TEES 2009	A6-45

MODEL #520 OUTPUT FILE #2LX DETAIL

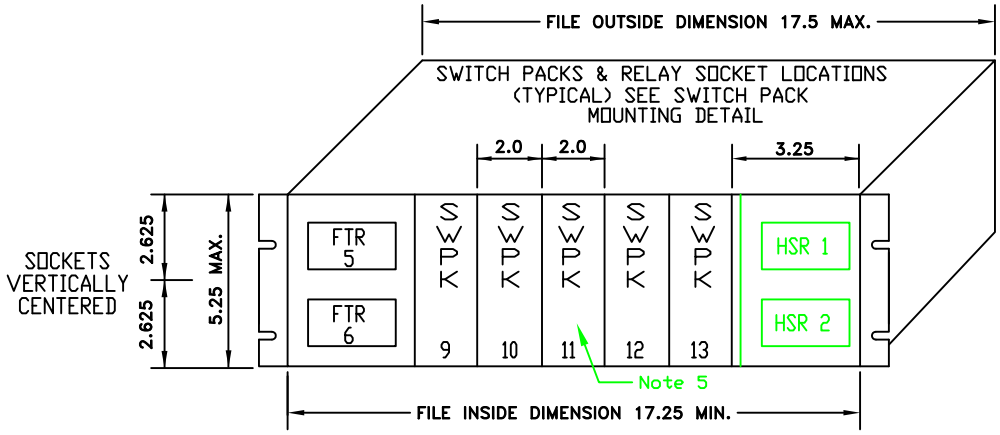

FRONT VIEW

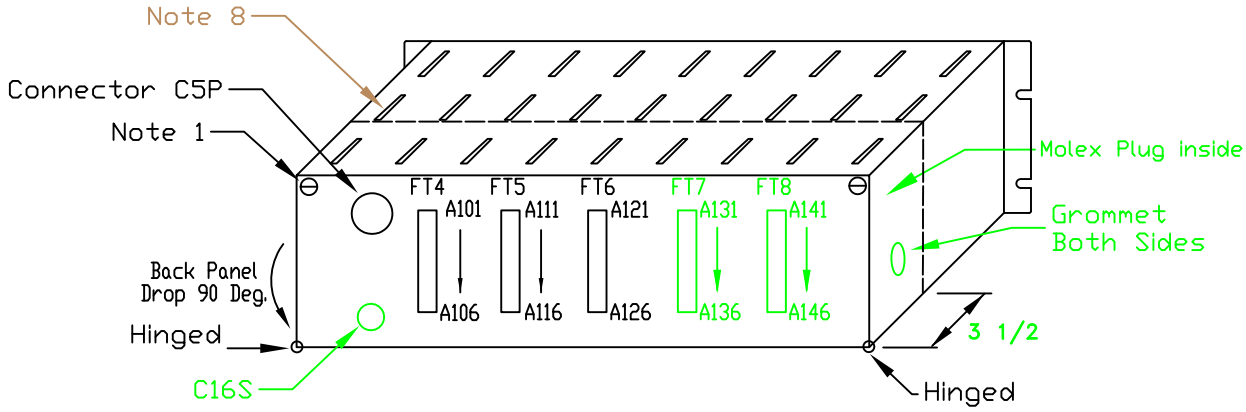

REAR VIEW
(BACK PANEL - CLOSED)

NOTE:

1. Thumb screws device
2. Back Panel Drop 90 Deg.
3. HSR=Health Status Relay,
4. For Terminal Assignment, see A6-50.
5. Health Status SWPK
6. Field Terminal contacts shall be 5-pin screw type, Weidmuller BLT-C18, Phoenix or equivalent.
7. TB03 and TB04 are inside the back panel.
8. Perforation on top and bottom.
9. All dimensions shown are in inches

TITLE: INPUT/OUTPUT FILE #2LX DETAILS SHEET 4 OF 12	
ERRATA 4	NO SCALE
TEES 2009	A6-46

OUTPUT FILE #1LX TERMINAL ASSIGNMENT DETAIL

01 TERM	FUNCTION
1	PDA CKT1/SWPKS 1,2,2P-1
2	PDA CKT2/SWPKS 3,4,4P-1
3	PDA CKT3/SWPKS 5,6,6P-1
4	PDA CKT4/SWPKS 7,8,8P-1
5	PDA FU1 CKT1/FTR1
6	PDA FU1 CKT2/FTR2
7	PDA FU2 CKT1/FTR3
8	PDA FU2 CKT2/FTR4
9	EQUIP. GROUND
10	AC-
11	AC+ (FROM PDA)
12	SSR (TO PDA)
13	DOOR SW. (FROM POL PAN)
14	FTR COILS (TO)

02 TERM	FUNCTION
1	+24VDC TO LOGIC RELAY (LR) COIL
2	DC GROUND
3	IFI-14J, STOP TIME (FROM M.U)
4	IFI-14D, FLASH SENSE (FROM I.R)
5	EXTERNAL (M.U) RESET
6	NA
7	+24VDC (CONTROLLED) TO SWITCHPACKS (1-12) POSITION 9

FT1 TERM	FUNCTION
101	SWPK 4-RED
102	SWPK 4-YEL
103	SWPK 4-GRN
104	SWPK 4P-RED
105	SWPK 4P-YEL
106	SWPK 4P-GRN
107	SWPK 8-RED
108	SWPK 8-YEL
109	SWPK 8-GRN
110	SWPK 8P-RED
111	SWPK 8P-YEL
112	SWPK 8P-GRN

FT2 TERM	FUNCTION
113	SWPK 2P-RED
114	SWPK 2P-YEL
115	SWPK 2P-GRN
116	SWPK 3-RED
117	SWPK 3-YEL
118	SWPK 3-GRN
119	SWPK 6P-RED
120	SWPK 6P-YEL
121	SWPK 6P-GRN
122	SWPK 7-RED
123	SWPK 7-YEL
124	SWPK 7-GRN

FT3 TERM	FUNCTION
125	SWPK 1-RED
126	SWPK 1-YEL
127	SWPK 1-GRN
128	SWPK 2-RED
129	SWPK 2-YEL
130	SWPK 2-GRN
131	SWPK 5-RED
132	SWPK 5-YEL
133	SWPK 5-GRN
134	SWPK 6-RED
135	SWPK 6-YEL
136	SWPK 6-GRN

Model #420. OUTPUT FILE #2LX TERMINAL ASSIGNMENT DETAIL

O3 TERM	FUNCTION
1	PDA FU1 CKT1/FTR5
2	PDA FU2 CKT2/FTR6
3	FTR COILS (TO)
4	AC-
5	PDA CKT5/SWPKS 9,10,11-1
6	PDA CKT6/SWPKS 12,13,14-1
7	EQUIP. GROUND
8	AC+ (FROM PDA)

O4 TERM	FUNCTION
1	+24VDC
2	DC GROUND
3	IFI-14J, STOP TIME (FROM M.U)
4	IFI-14D, FLASH SENSE (FROM I.R)
5	EXTERNAL (M.U) RESET
6	WDT INPUT
7	LR COIL (UNIT IN)
8	SSR (PDA)

FT4 TERM	FUNCTION	FT5 TERM	FUNCTION	FT6 TERM	FUNCTION
A101	SWPK 13-RED	A111	SWPK 11-RED	A121	SWPK 9-RED
A102	SWPK 13-YEL	A112	SWPK 11-YEL	A122	SWPK 9-YEL
A103	SWPK 13-GRN	A113	SWPK 11-GRN	A123	SWPK 9-GRN
A104	SWPK 14-RED	A114	SWPK 12-RED	A124	SWPK 10-RED
A105	SWPK 14-YEL	A115	SWPK 12-YEL	A125	SWPK 10-YEL
A106	SWPK 14-GRN	A116	SWPK 12-GRN	A126	SWPK 10-GRN

NOTE:

1. Thumb screws device.
2. All dimensions shown are in inches.

TITLE:

INPUT/OUTPUT FILE DETAILS

SHEET 7 OF 12

ERRATA 4	NO SCALE
TEES 2009	A6-49

MODEL #420 OUTPUT FILE #2LX DETAIL
(AUX. FILE)

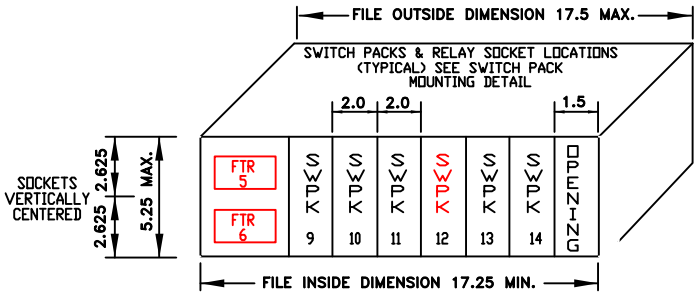

FRONT VIEW

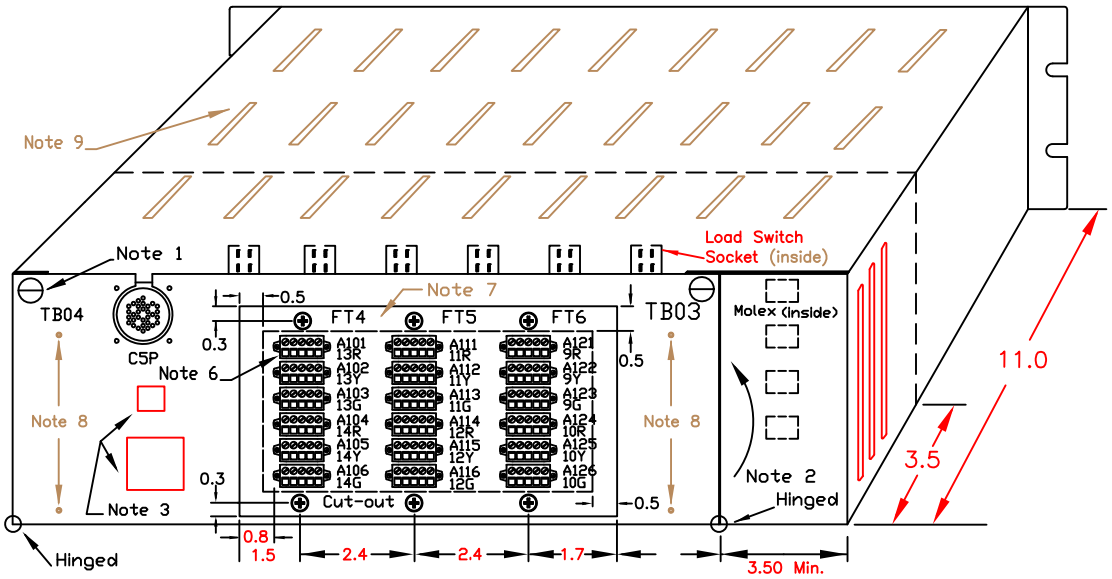

REAR VIEW
(BACK PANEL - CLOSED)

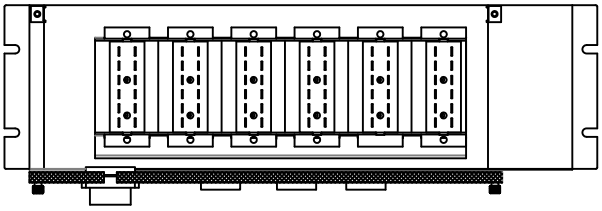

REAR VIEW
(BACK PANEL - OPEN)

NOTE:

1. Thumb screws device
2. Back Panel Drop 90 Deg.
3. Panel stamped for IR & LR relay sockets, but relays not installed
4. For Terminal Assignment, see Output File #2LX detail.
5. See A6-49 for sheet 7.
6. Field Terminal contacts shall be 5-pin screw type, Weidmuller BLT-C18, Phoenix or equivalent.
7. Field Terminal Panel (FTP-2LX), Height = 4.6 - 4.8, Width = 8.0
8. TB03 inside the back panel.
9. Perforation on top and bottom.
10. All dimensions shown are in inches

TITLE: INPUT/OUTPUT FILE #2LX DETAILS SHEET 12 OF 13	
ERRATA 4	NO SCALE
TEES 2009	A6-54

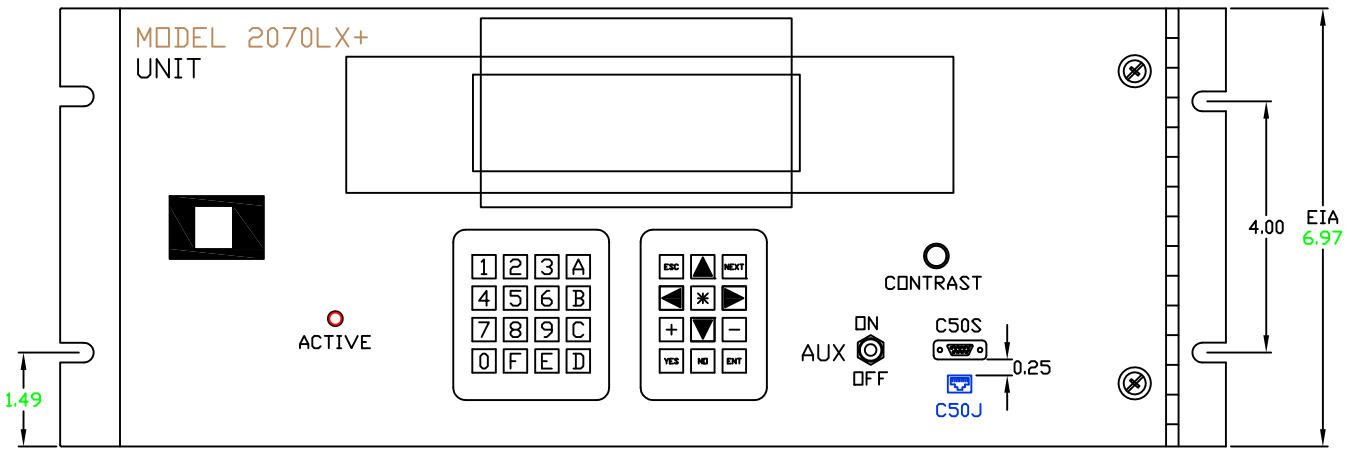

FRONT PANEL INSTALLED

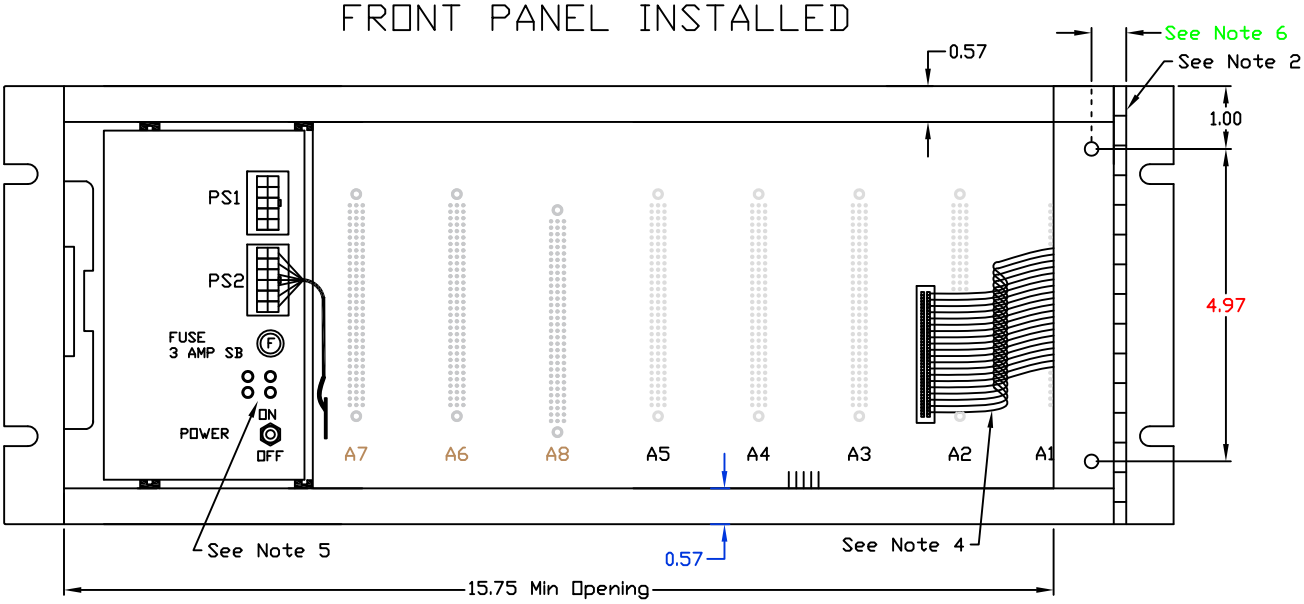

FRONT PANEL REMOVED

NOTES: (FOR THIS DETAIL)

1. The unit shall be capable of mounting to a Standard EIA-310B Rack using 4U open end mounting slots.
2. Continuous stainless steel hinge (0.157in maximum hinge barrel) that attaches to the Front Panel by two TSD #1 Thumbscrew devices.
3. Actual location of ACTIVE light, AUX switch, C50S, C50J and contrast control shall be limited to ACTIVE light on the left side of the panel; AUX switch, C50S, C50J and the contrast control on the right side. They shall be located greater than 1 in from the edge of each other, other devices, connector or latch. C50J only needs to be 0.25in minimum from C50S.
4. The length of the Front Panel Harness shall be 5in + 2% and it shall be removable.
5. LED indicators for each DC voltage shall be provided.
6. With the hinge installed, the distance between the TSD hole center and the CHASSIS Right Side (inside plane) shall be 0.55in.
7. All dimensions shown are in inches.

TITLE: MODEL 2070LX+ CHASSIS FRONT VIEW	
ERRATA 4	NO SCALE
TEES 2009	A9-1

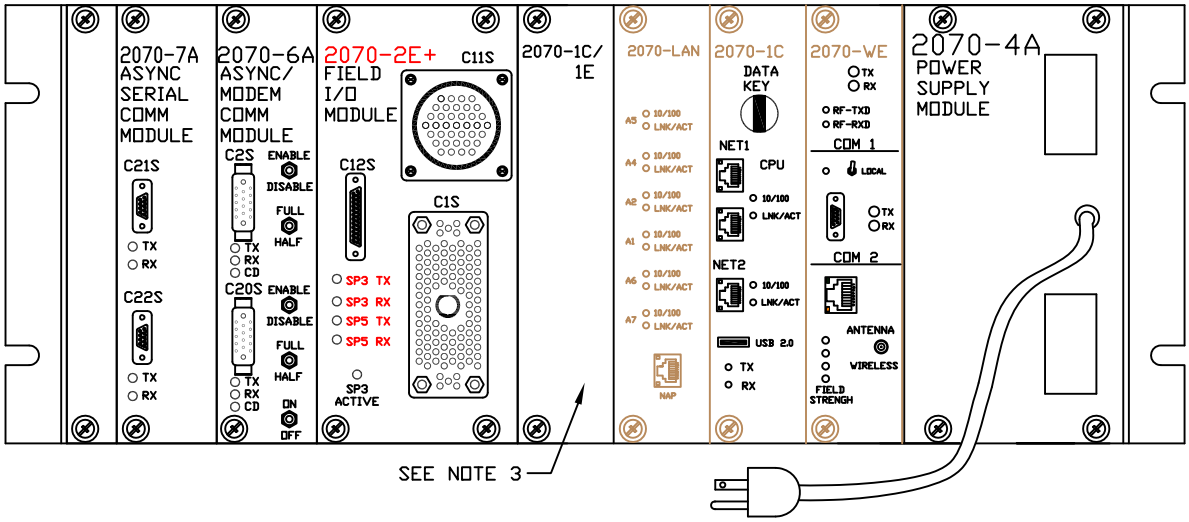

REAR VIEW, LOADED

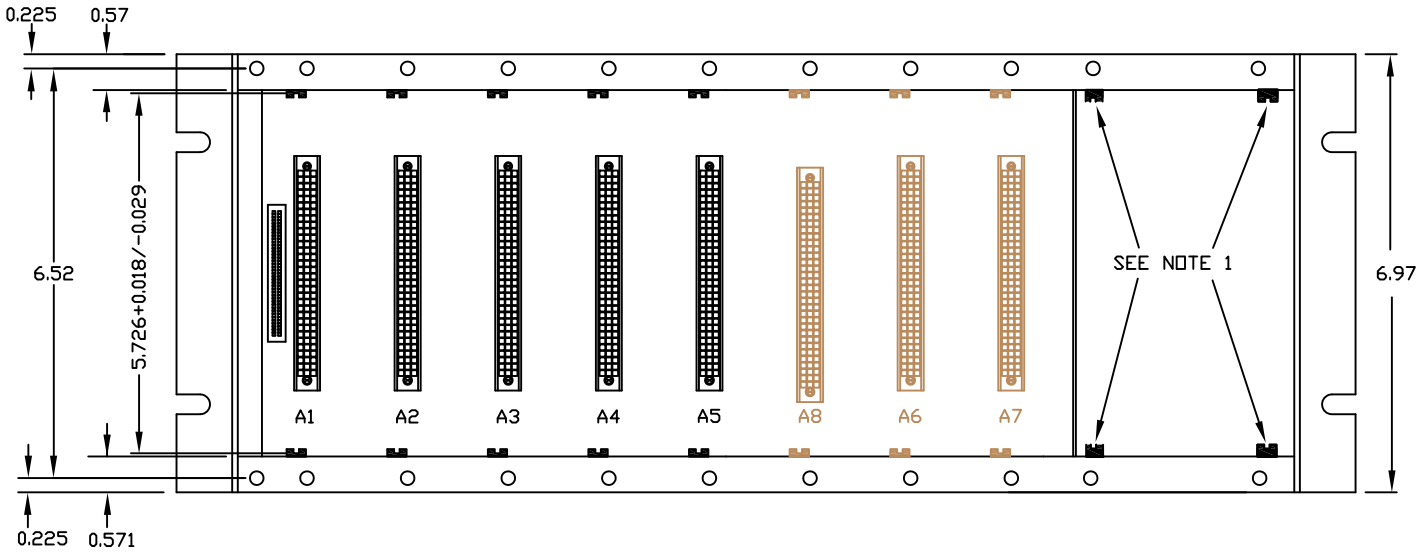

REAR VIEW, UNLOADED

NOTES: (FOR THIS DETAIL)

1. Four permanently attached 8in long Card Guides SAE 1800F (OR EQUAL) beginning 0.51in from the backplane mounting surface.
2. Blank plates shall cover all unused module openings.
3. All Module Front Plates thickness shall be (0.08±0.005)
4. All dimensions shown are in inches.

TITLE: MODEL 2070LX+ CHASSIS REAR VIEW	
ERRATA 4	NO SCALE
TEES 2009	A9-2

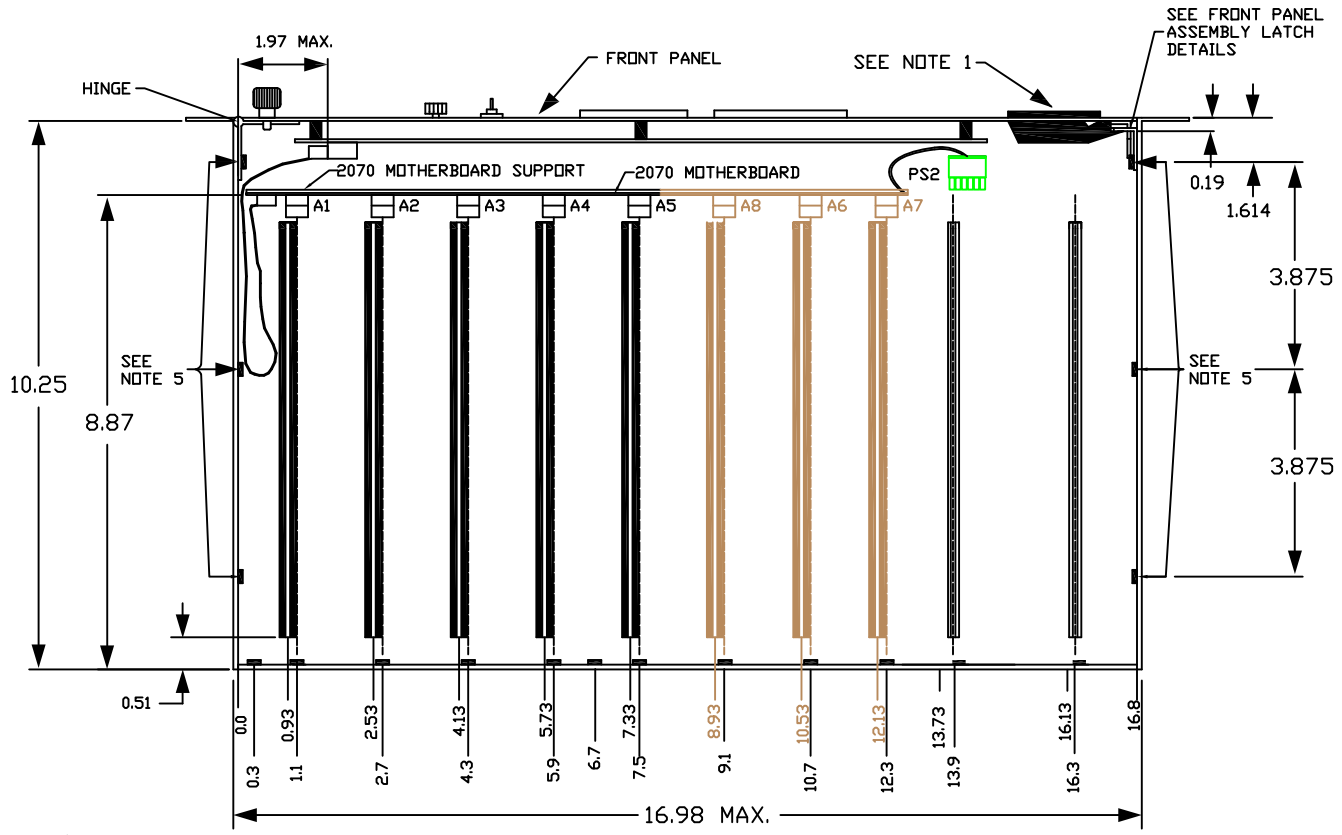

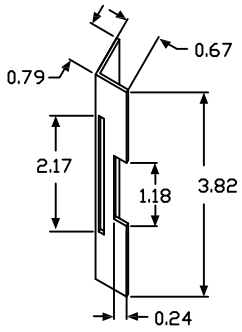

CHASSIS BRACKET
(Thickness is 0.06)

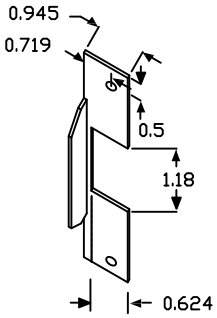

FRONT PANEL BRACKET

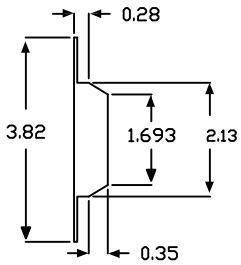

SIDE VIEW

FRONT PANEL ASSEMBLY LATCH DETAILS

NOTES: (FOR THIS DETAIL)

1. Front Panel Assembly Latch mating with and rigidly held in place by Chassis Guide Latch/member shall be provided.
2. Nylon card guides, SAE 1800F (OR EQUAL), shall be provided (top and bottom) for Mother Slot/Connectors A1 to A7. The Guides shall begin 0.51 inch from the Backplane outside surface.
3. M3 PEM Self-clinching Miniature Fasteners (OR EQUAL) shall be used for mounting holes located on Backplane Surface.
4. All harnesses shall have a minimum slack of 1 inch when connected.
5. M3 PEM Self-clinching Miniature Fasteners (OR EQUAL) shall be used for mounting holes to match the TSD #3 Thumbscrew Devices on the Model 2070-8 Module. Fastener centers shall be 0.25 inch above unit baseline.
6. The 2070 chassis top & bottom sections shall be constructed with a continuous 0.571 inch folded lip along the front perpendicular to the 2070 top and bottom sections. The top and bottom sections of the 2070 chassis shall be recessed 0.71 inch as measured from the front surface of the front panel.
7. Chassis side plates shall be 0.090in thick.
8. All dimensions shown are in inches.

TITLE: MODEL 2070LX+ CHASSIS TOP VIEW	
ERRATA 4	NO SCALE
TEES 2009	A9-3

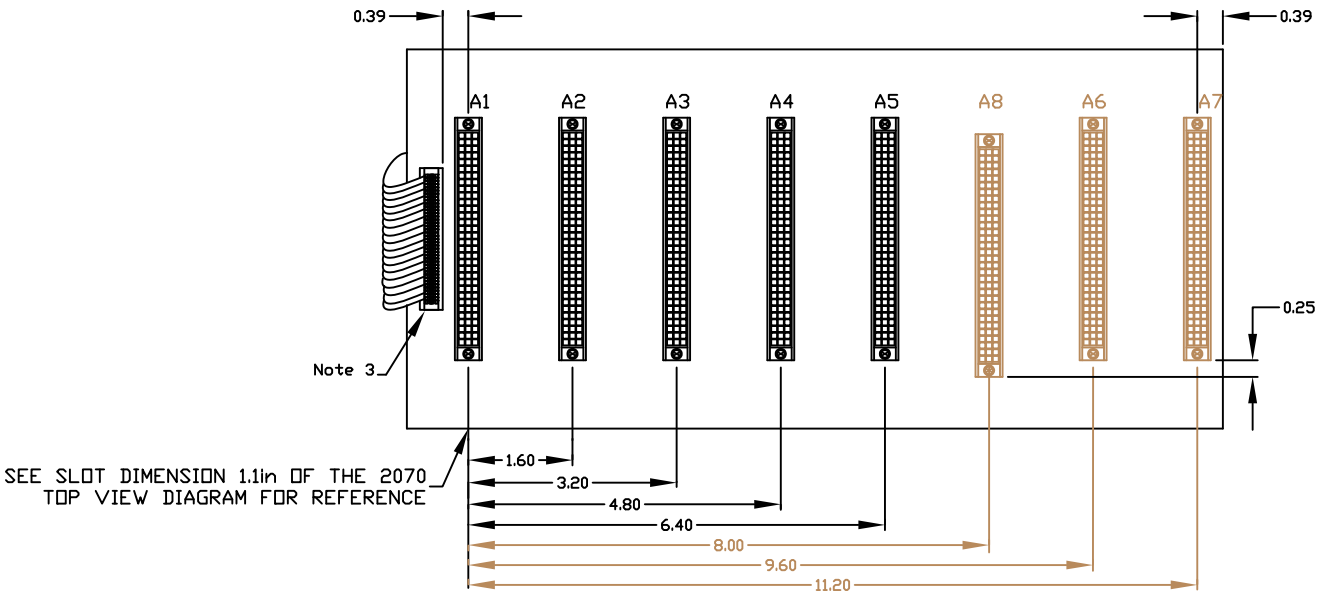

CONNECTOR VIEW

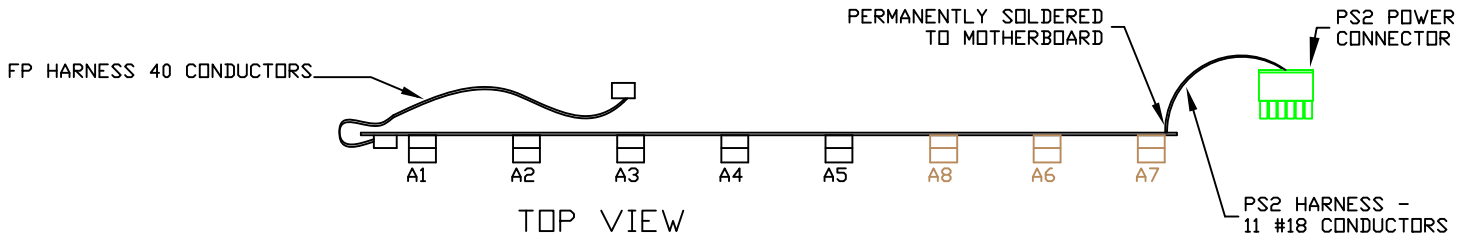

TOP VIEW

FP HARNESS PIN/WIRING ASSIGNMENT			
PIN	CONNECTOR ROW A	PIN	CONNECTOR ROW B
1	SP4TXD+	2	SP4TXD-
3	SP4RXD+	4	SP4RXD-
5	SP6TXD+	6	SP6TXD-
7	SP6RXD+	8	SP6RXD-
9	NA	10	NA
11	NA	12	NA
13	NA	14	NA
15	NA	16	NA
17	NA	18	NA
19	NA	20	NA
21	DCG #1	22	DCG #1
23	+12 VDC SER	24	-12 VDC SER
25	DCG #1	26	DCG #1
27	CPU LED	28	DCG #1
29	CPURESET	30	DCG #1
31	DCG #1	32	C50 ENABLE
33	DCG #1	34	+5 VDC
35	+5 VDC	36	+5 VDC
37	+5 VDC	38	+5 VDC
39	NA	40	NA

PS2 HARNESS PIN/WIRING ASSIGNMENT	
PIN	FUNCTION
1	+5 VDC
2	+12 VDC SER
3	-12 VDC SER
4	DCG #1 (+5 VDC & 12 SER)
5	+5 VDC Standby
6	ISO +12 VDC
7	DCG #2 (ISO +12 VDC ONLY)
8	POWERDOWN
9	POWERUP
10	EG (EQUIPMENT GROUND)
11	LINESYNC
12	NA

NOTES: (FOR THIS DETAIL)

1. The Motherboard shall be a 0.125 inch minimum thickness pcb mechanically mounted in a vertical position.
2. A1 to A7 receptacle connectors shall be 96 socket contact DIN 41612 connectors (ROBINSON NUGENT #DIN 96RSC or ELCO Series 8477 Three Row Inverted Socket OR EQUAL).
3. The FP Harness shall be connected to the Motherboard via a header connector. Pin 1 shall be in the lower right hand corner.
4. Front Panel Harness Connector shall intermate with AMP 102-160-9 or equal located on Front Panel PCB.
5. Angle Brackets shall support the Motherboard to the Model 2070 chassis.
6. All dimensions shown are in inches.

TITLE: MODEL 2070LX+ CHASSIS MOTHERBOARD	
ERRATA 4	NO SCALE
TEES 2009	A9-4

A6 TO A7 CONNECTOR PINOUT			
PIN	A	B	C
1	NA	NA	NA
2	NA	NA	NA
3	NA	NA	NA
4	NA	NA	NA
5	NA	NA	NA
6	NA	NA	NA
7	NA	NA	NA
8	NA	NA	NA
9	NA	NA	NA
10	NA	NA	NA
11	NA	NA	NA
12	NA	NA	NA
13	NA	NA	NA
14	NA	NA	NA
15	NA	NA	NA
16	NA	NA	NA
17	NA	NA	NA
18	NA	NA	NA
19	NA	NA	NA
20	NA	NA	NA
21	DCG #1	NA	NA
22	NetP5 (TX+)	NA	NA
23	NetP5 (TX-)	NA	NA
24	NA	LINESYNC	NA
25	NetP5 (RX+)	POWERUP	NA
26	NetP5 (RX-)	POWERDOWN	NA
27	DCG #1	DCG #1	DCG #1
28	+12 VDC SER	-12 VDC SER	+5 Standby
29	+5 VDC	+5 VDC	+5 VDC
30	DCG #1	DCG #1	DCG #1
31	ISO +12 VDC	ISO +12 VDC	ISO +12 VDC
32	DCG #2	DCG #2	DCG #2

NETWORK SWITCH PORT CONNETOR PIN OUT	
Port 1	A5 Conn Pinout
TX+	22
TX-	23
RX+	25
RX-	26
Port 2	A4 Conn Pinout
TX+	22
TX-	23
RX+	25
RX-	26
Port 3	A2 Conn Pinout
TX+	22
TX-	23
RX+	25
RX-	26
Port 4	A1 Conn Pinout
TX+	22
TX-	23
RX+	25
RX-	26
Port 5	A6 Conn Pinout
TX+	22
TX-	23
RX+	25
RX-	26
Port 6	A7 Conn Pinout
TX+	22
TX-	23
RX+	25
RX-	26

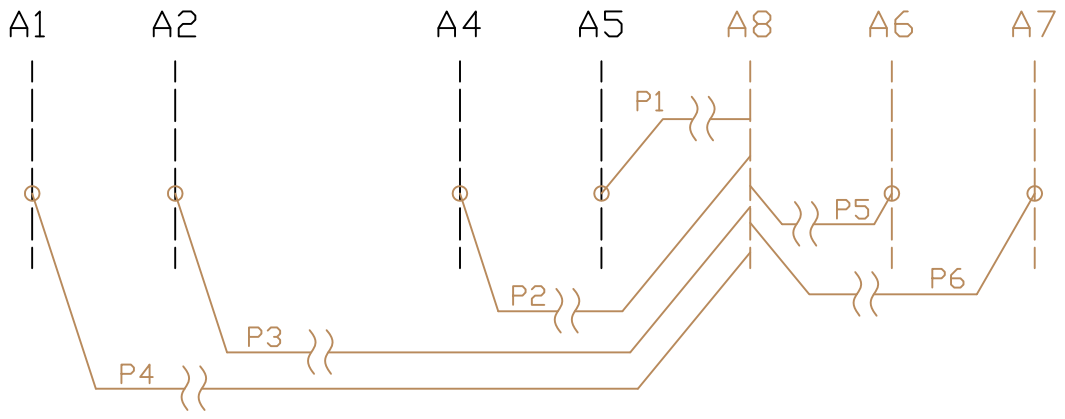

Network Connections A1, A2, A4, A5, A6, A7 & A8

NOTES: (FOR THIS DETAIL)

1. Functions are referenced to CPU.

TITLE: MODEL 2070LX+ NETWORK MOTHERBOARD CONNECTOR PINOUT	
ERRATA 4	NO SCALE
TEES 2009	A9-14

A8 CONNECTOR PINOUT			
PIN	A	B	C
1	DCG #1	DCG #1	DCG #1
2	Netwk1-A1	NA	Netwk3-A1
3	Netwk2-A1	NA	Netwk4-A1
4	DCG #1	DCG #1	DCG #1
5	Netwk1-A2	NA	Netwk3-A2
6	Netwk2-A2	NA	Netwk4-A2
7	DCG #1	DCG #1	DCG #1
8	Netwk1-A4	NA	Netwk3-A4
9	Netwk2-A4	NA	Netwk4-A4
10	DCG #1	DCG #1	DCG #1
11	Netwk1-A5	NA	Netwk3-A5
12	Netwk2-A5	NA	Netwk4-A5
13	DCG #1	DCG #1	DCG #1
14	Netwk1-A6	NA	Netwk3-A6
15	Netwk2-A6	NA	Netwk4-A6
16	DCG #1	DCG #1	DCG #1
17	Netwk1-A7	NA	Netwk3-A7
18	Netwk2-A7	NA	Netwk4-A7
19	DCG #1	DCG #1	DCG #1
20	Netwk1-FP	NA	Netwk3-FP
21	Netwk2-FP	NA	Netwk4-FP
22	DCG #1	DCG #1	DCG #1
23	NA	NA	NA
24	NA	LINESYNC	NA
25	NA	POWERUP	CPU RESET
26	DCG #1	POWERDOWN	DCG #1
27	SP6RX+OUT	SP6TX+	SP6RX+IN
28	SP6RX-OUT	SP6TX-	SP6RX-IN
29	PS2-12	NA	NA
30	+5VDC	+5VDC	+5VDC
31	+5VDC	+5VDC	+5VDC
32	DCG #1	DCG #1	DCG #1

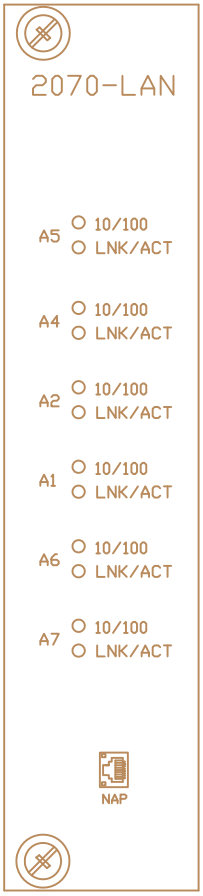

LED Indicators

NOTES: (FOR THIS DETAIL)

1. Functions are referenced to CPU.

TITLE: MODEL 2070-LAN MODULE CONNECTOR PINOUT	
ERRATA 4	NO SCALE
TEES 2009	A9-18

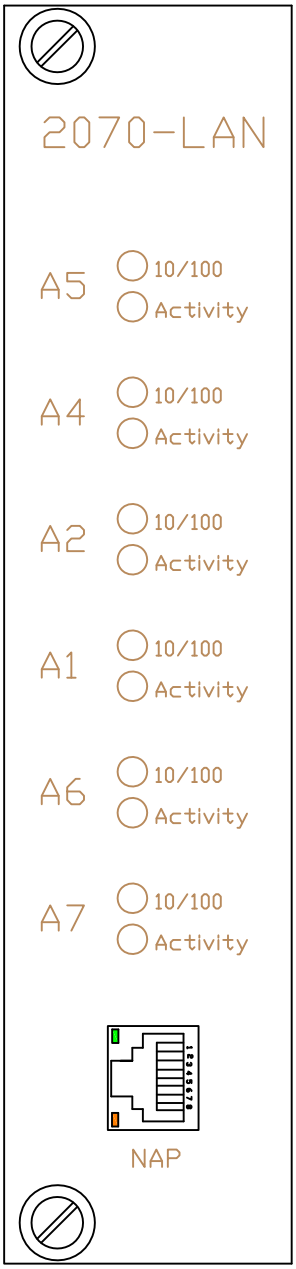

NAP		RJ45 PIN ASSIGNMENTS	
PIN	FUNCTION	PIN	FUNCTION
1	TX +	5	NA
2	TX -	6	RX -
3	RX +	7	NA
4	NA	8	NA

NOTES: (FOR THIS DETAIL)

1. Network Access Port (NAP).

TITLE: MODEL 2070-LAN 2070 Local Area Network Module	
ERRATA 4	NO SCALE
TEES 2009	A10-13

GT–BBS Utility Power Connection Diagram

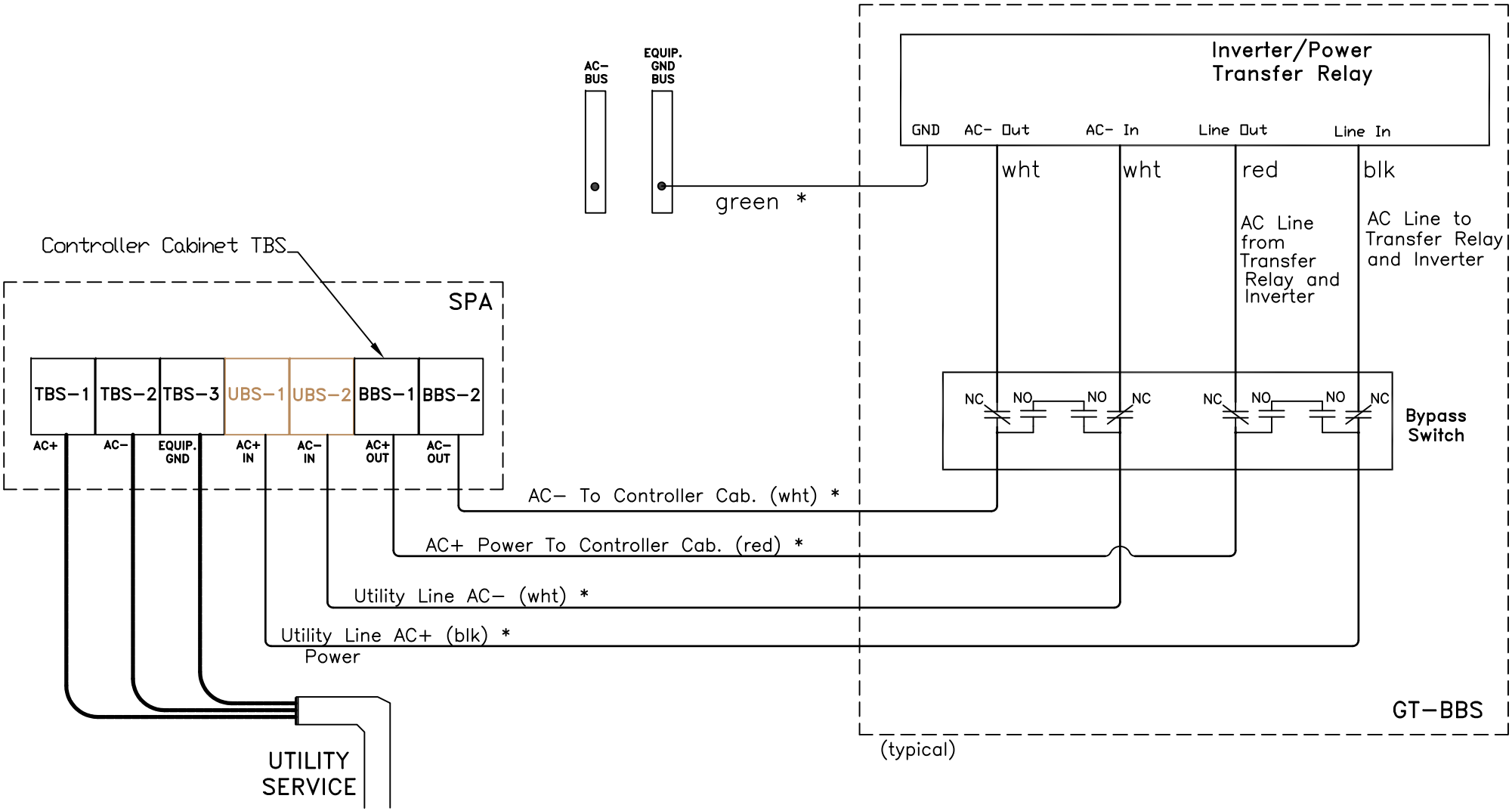

Note:

1. See A6–12 for conductor insulation colors and definitions.
2. All dimensions shown are in inches.

* As a minimum, these wires shall be provided in 9 ft lengths as part of the interconnect wiring kit.

TITLE:	GT–BBS Utility Power Connection Diagram	
	ERRATA 4	NO SCALE
	TEES 2009	A12–2

GT-BBS BATTERY INTERFACE

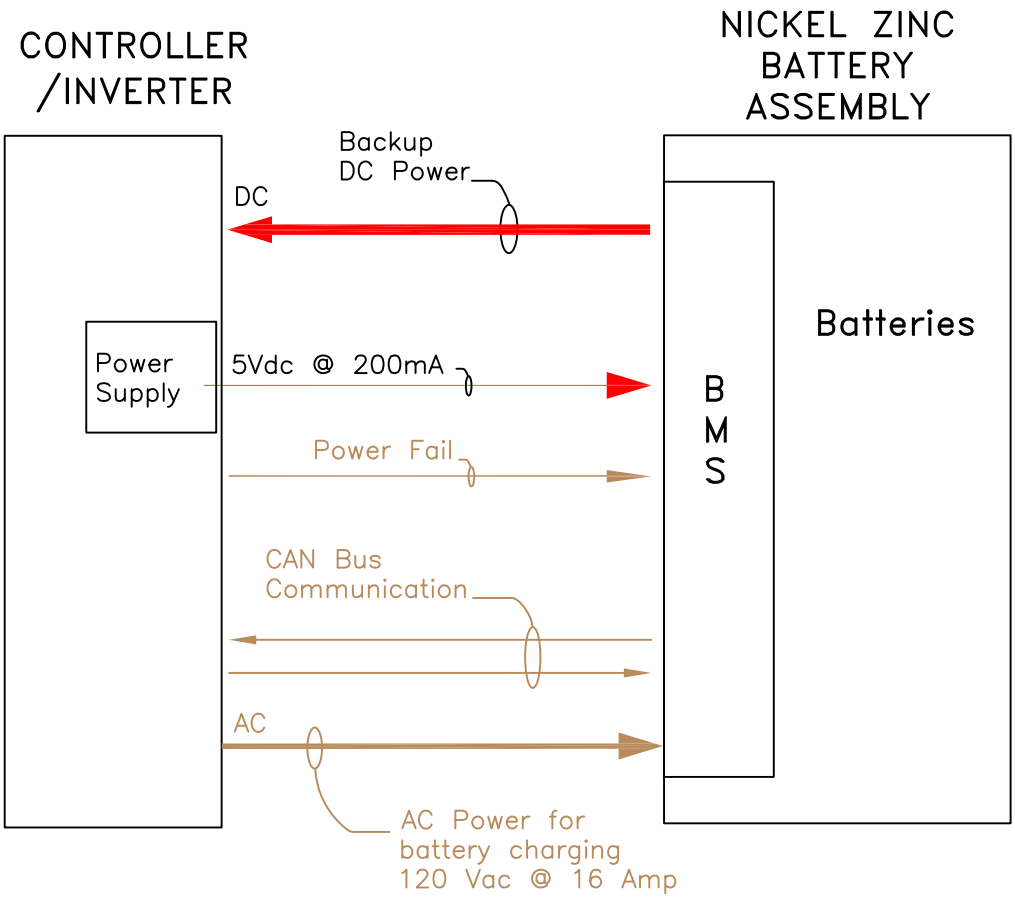

Notes: (For this detail)

1. BMS=Battery Management System
2. All dimensions shown are in inches.

TITLE: GT-BBS Battery Interface	
ERRATA 4	NO SCALE
TEES 2009	A12-4

GT-BBS HARNESS

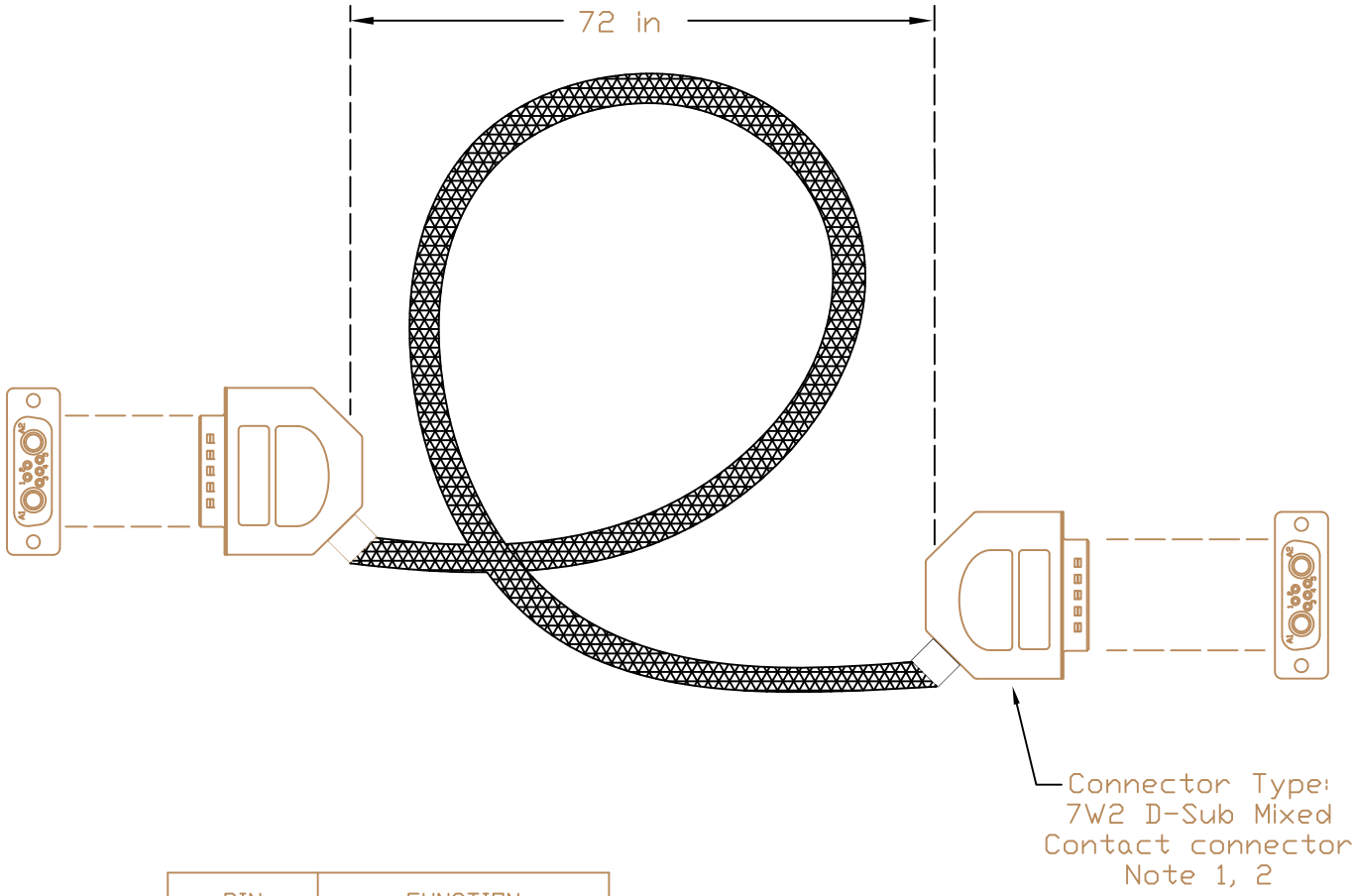

PIN	FUNCTION
A1	DC-
A2	DC+
1	CANBUS HIGH
2	DC GND, 5V
3	CANBUS LOW
4	DC+, 5V
5	POWER FAIL

NOTE:

1. Connector pinout identical for both sides.
2. Connector: Molex Part No. 17131070059
   Power Terminals: Molex Part No. 1727040148
   Backshell: Norcomp Part No. 955-015-030R121
3. All dimensions shown are in inches

TITLE: GT-BBS HARNESS	
ERRATA 4	NO SCALE
TEES 2009	A12-5

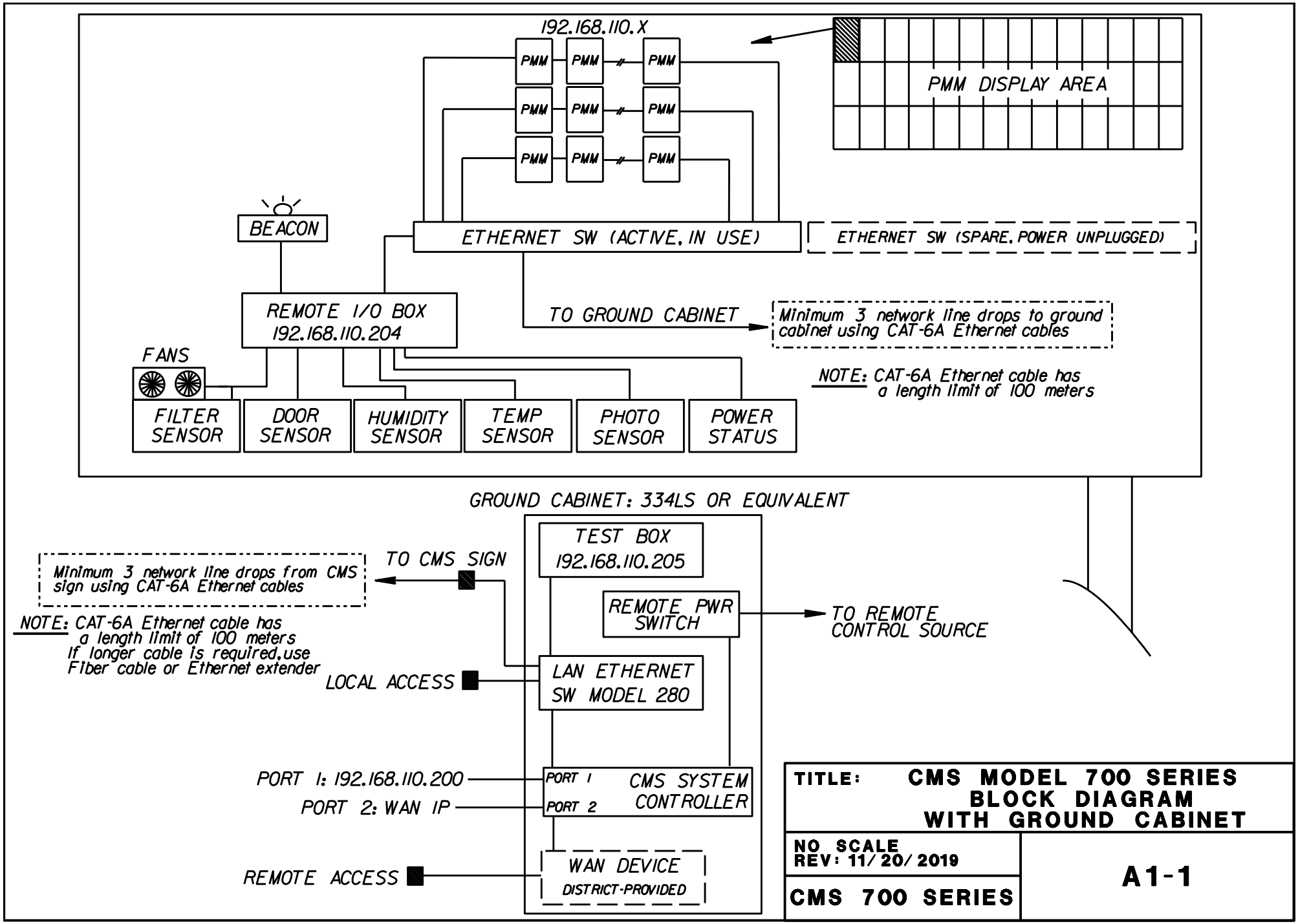
192.168.110.X
PMM
PMM DISPLAY AREA
BEACON
ETHERNET SW (ACTIVE, IN USE)
ETHERNET SW (SPARE, POWER UNPLUGGED)
REMOTE I/O BOX
192.168.110.204
TO GROUND CABINET
Minimum 3 network line drops to ground cabinet using CAT-6A Ethernet cables
NOTE: CAT-6A Ethernet cable has a length limit of 100 meters
FANS
FILTER SENSOR
DOOR SENSOR
HUMIDITY SENSOR
TEMP SENSOR
PHOTO SENSOR
POWER STATUS
GROUND CABINET: 334LS OR EQUIVALENT
TEST BOX
192.168.110.205
TO CMS SIGN
Minimum 3 network line drops from CMS sign using CAT-6A Ethernet cables
NOTE: CAT-6A Ethernet cable has a length limit of 100 meters If longer cable is required, use Fiber cable or Ethernet extender
REMOTE PWR SWITCH
TO REMOTE CONTROL SOURCE
LOCAL ACCESS
LAN ETHERNET SW MODEL 280
PORT 1: 192.168.110.200
PORT 2: WAN IP
PORT 1
PORT 2
CMS SYSTEM CONTROLLER
REMOTE ACCESS
WAN DEVICE
DISTRICT-PROVIDED
TITLE: CMS MODEL 700 SERIES BLOCK DIAGRAM WITH GROUND CABINET
NO SCALE
REV: 11/20/2019
CMS 700 SERIES
A1-1

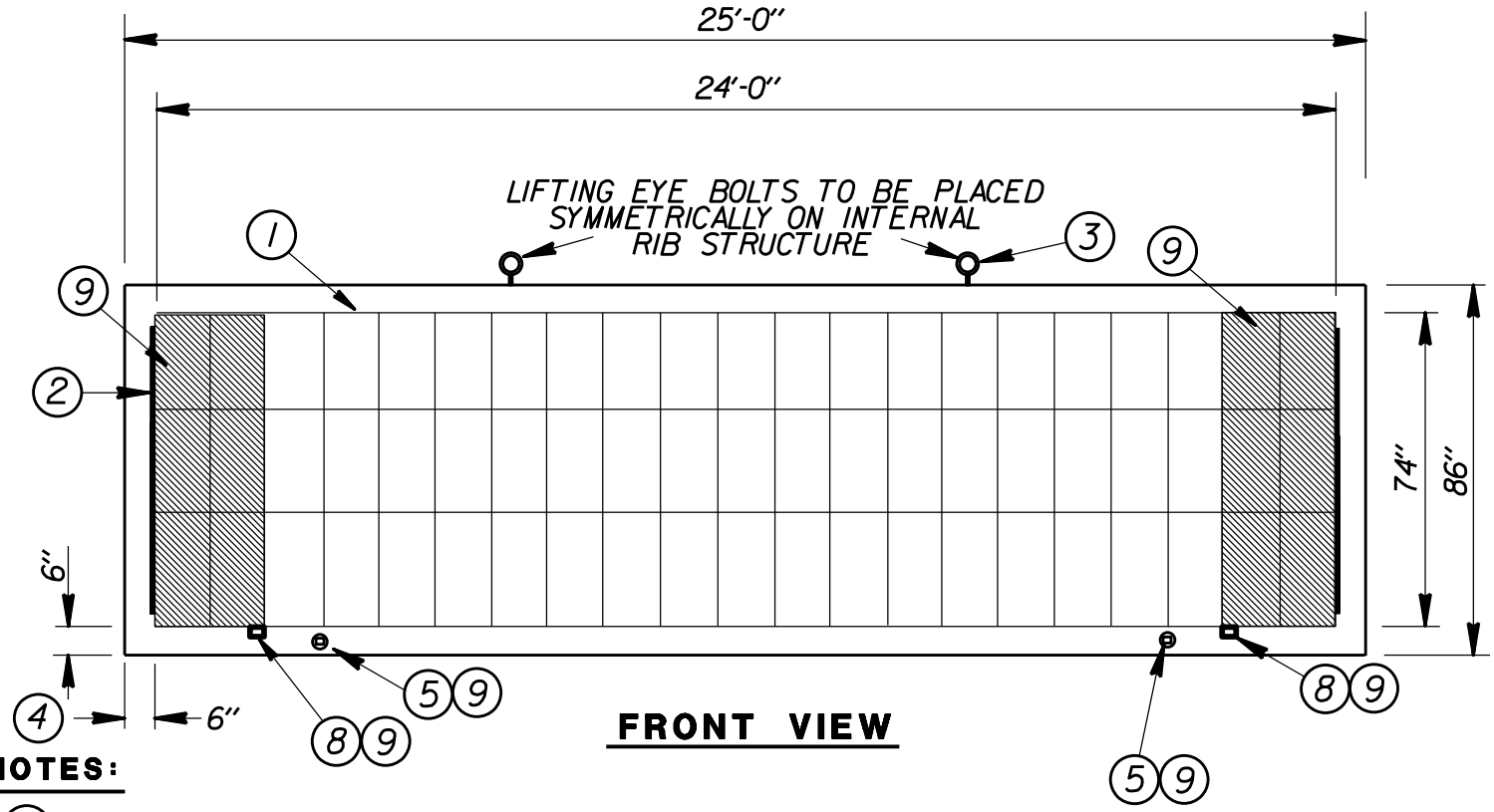

FRONT VIEW

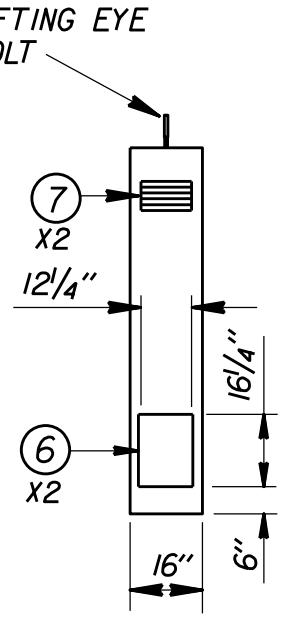

SIDE VIEW

Label or Silkscreen

DOOR RELEASE TORQUE 50 LBS

NOTES:

1. PMM Type I: 21 PMM across x 3 PMM down (63 PMM total)
2. Front door hinge open for electrical equipment access.
3. The lifting bracket must be used to prevent injury and damage to the sign.
4. The sign shall have 6 inch contrast borders on all four sides for display clarity and maximum contrast ratio. Modification to the contrast border shall require Caltrans engineering approval.
5. Door release mechanism with nearby high endurance label or silkscreen
6. Cutouts 16 1/4" x 12 1/4" for 2-fan fan box. Active fan box on side of equipment rack. Cutout on other side is reserved for other mount option Both cutouts to be protected with watertight doors with ventilation to allow airflow
7. Ventilation louvers on top of both sides of sign.
8. Door locking plate
9. Two doors are shown for demonstration purposes only. System shall have ONLY ONE door, EITHER on the left or on the right

TITLE:	CMS MODELS 700/700C FRONT AND SIDE VIEWS
NO SCALE REV:09/19/2019	A1-5
CMS 700 SERIES	

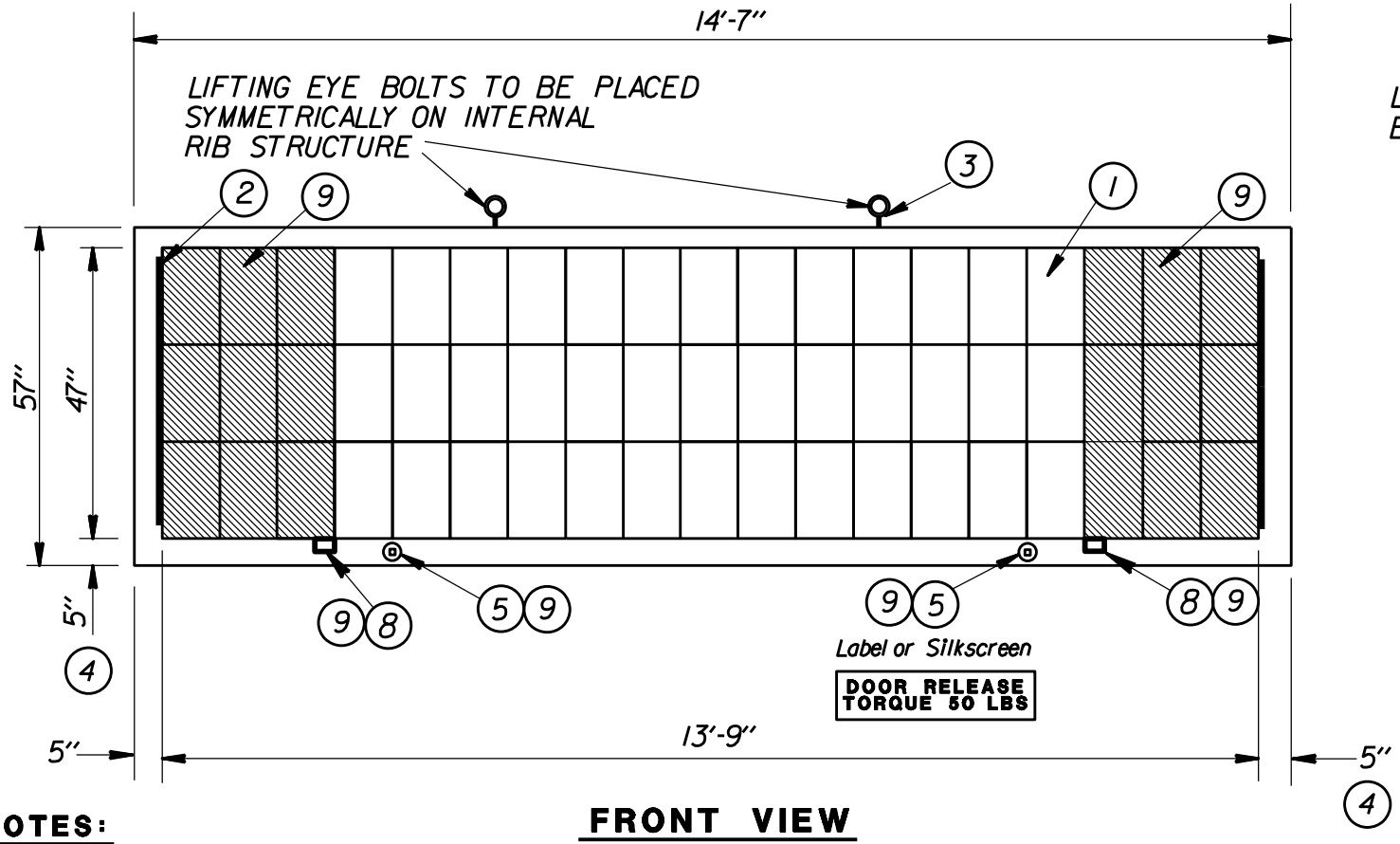

FRONT VIEW

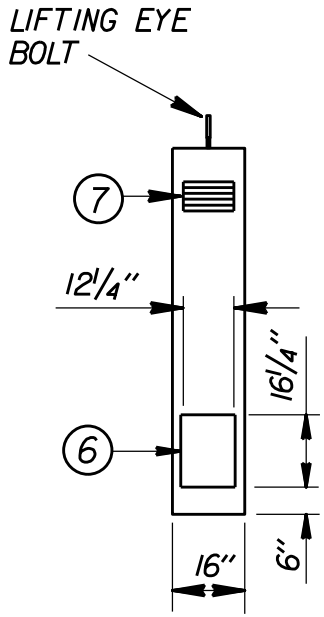

SIDE VIEW

NOTES:

1. PMM Type 2: 19 PMM across x 3 PMM down (57 PMM total)
2. Front door hinge open for electrical equipment access.
3. The lifting bracket must be used to prevent injury and damage to the sign.
4. The sign shall have 5-inch contrast borders on all four sides for display clarity and maximum contrast ratio. Modification to the contrast border shall require Caltrans engineering approval.
5. Door release mechanism with nearby high endurance label or silkscreen
6. Hole on each side - 16¼" x 12¼" for fan box installation.
7. Ventilation louvers on top of both sides of sign
8. Door locking plate
9. Two doors are shown for demonstration purposes only. System shall have ONLY ONE door, EITHER on the left or on the right

TITLE: CMS MODELS 710/710C FRONT AND SIDE VIEWS	
NO SCALE REV: 09/19/2019	A1-10
CMS 700 SERIES	

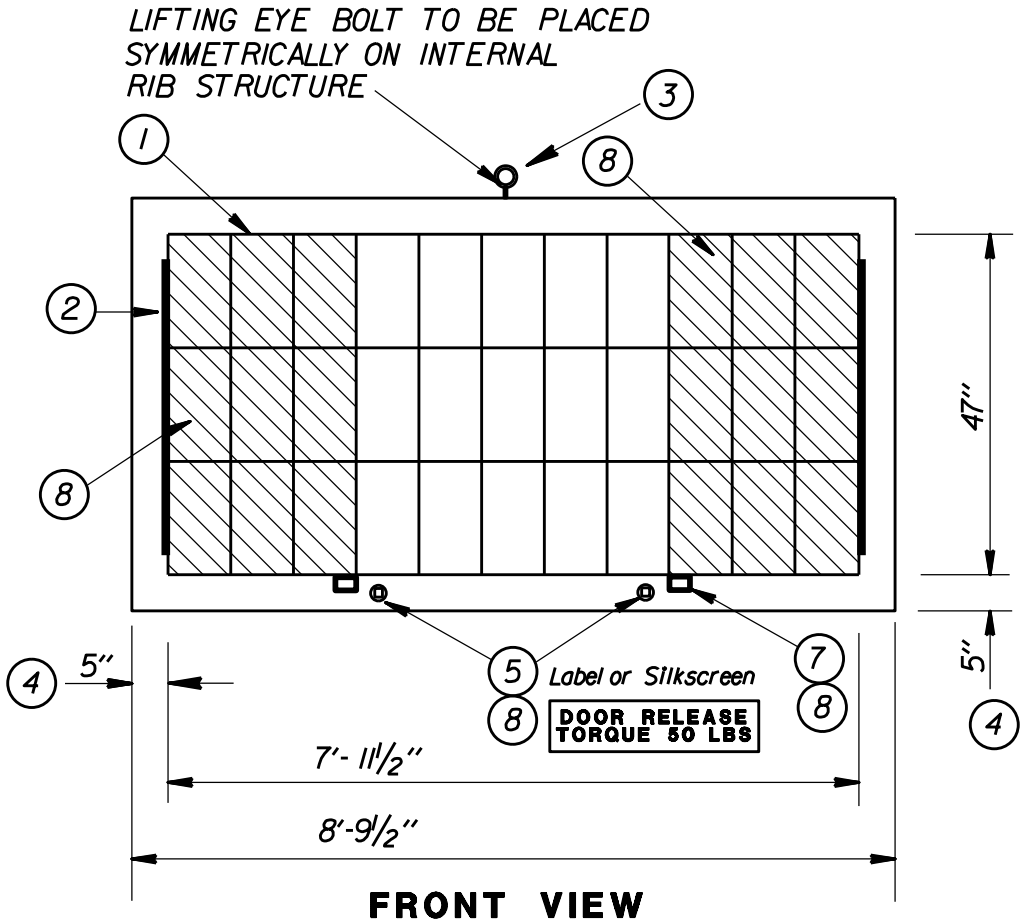

FRONT VIEW

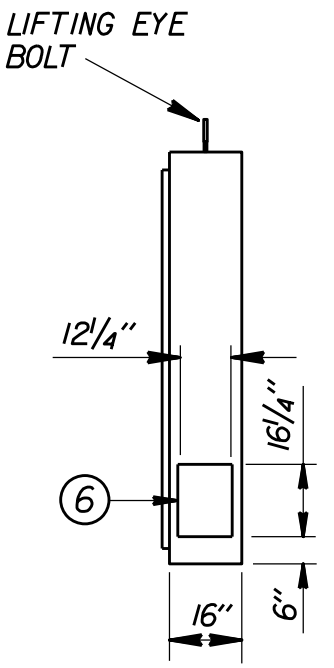

SIDE VIEW

NOTES:

1. PMM Type 2: 11 PMM across x 3 PMM down (33 PMM total)
2. Front door hinge open for electrical equipment access.
3. The lifting bracket must be used to prevent injury and damage to the sign.
4. The sign shall have 5-inch contrast borders on all four sides for display clarity and maximum contrast ratio. Modification to the contrast border shall require Caltrans engineering approval.
5. Door release mechanism with nearby high endurance label or silkscreen
6. Hole on each side - 16 1/4" x 12 1/4" for fan box installation.
7. Door locking plate
8. Two doors are shown for demonstration purposes only. System shall have ONLY ONE door, EITHER on the left or on the right

TITLE:	CMS MODELS 720/720C FRONT AND SIDE VIEWS
NO SCALE REV: 09/19/2019	A1-14
CMS 700 SERIES	

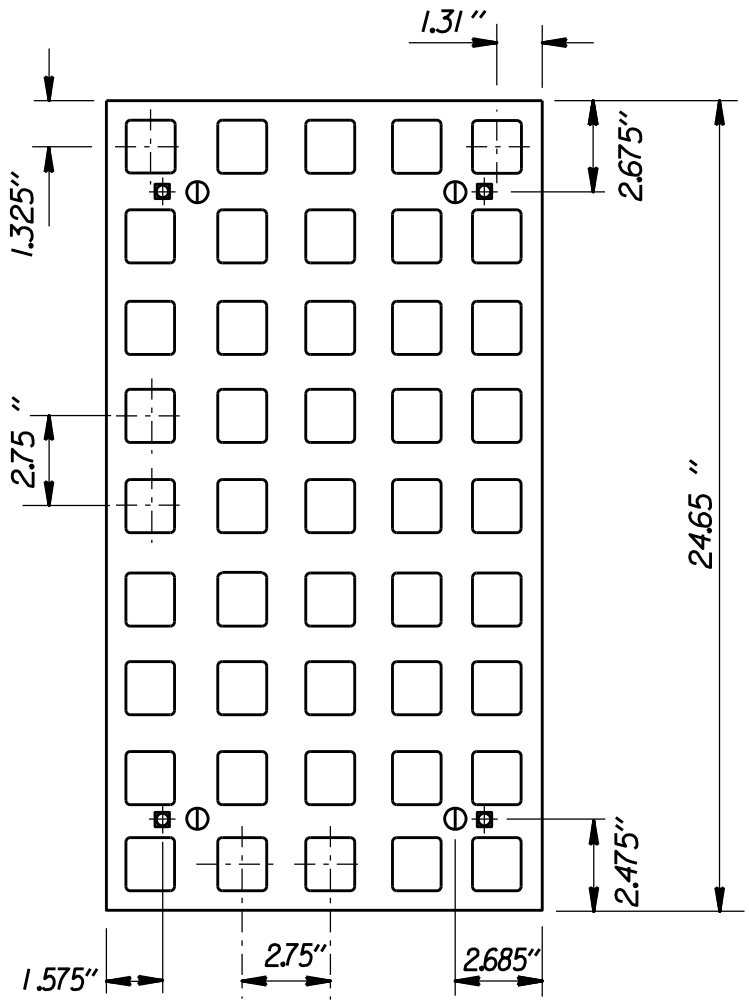

FRONT VIEW

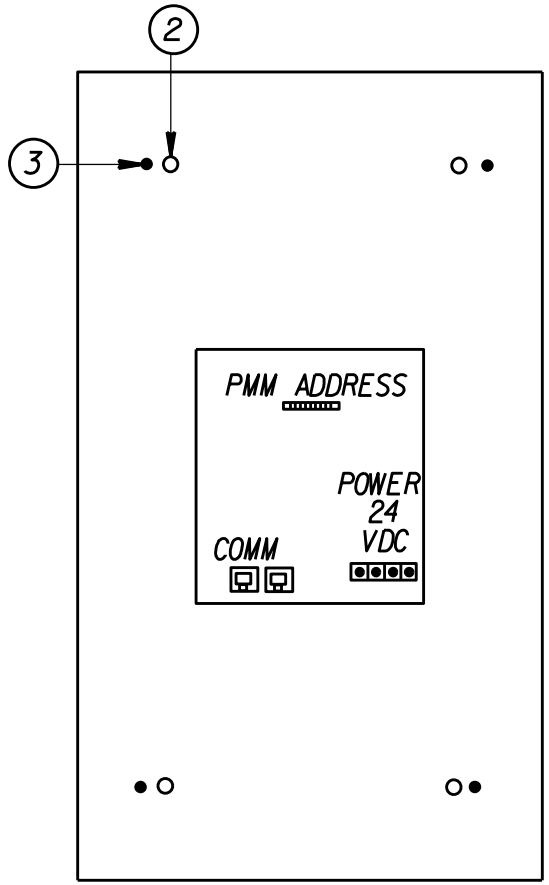

REAR VIEW

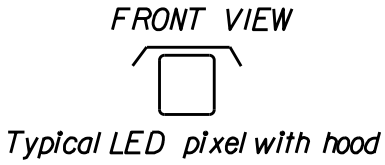

NOTES:

1. Pixel array shall be symmetrical within the panel.
2. Captive thumbscrews (Type M6)
3. Guiding / Alignment pin (Type M6).

TITLE: PIXEL MATRIX MODULE-TYPE 1 FRONT AND REAR VIEWS	
NO SCALE REV: 10/10/2019	A1-17
CMS 700 SERIES	

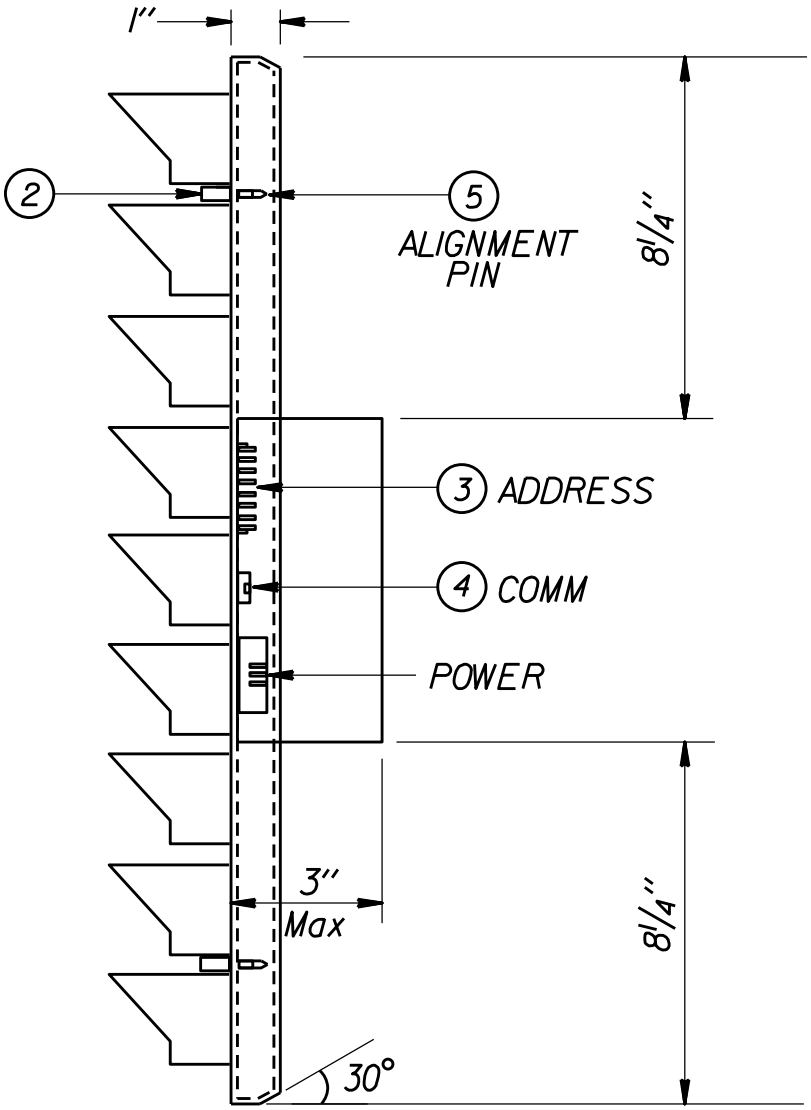

SIDE VIEW

NOTES:

1. All pixels shall be mounted to the same PC board.
2. Captive thumbscrews (type M6)
3. 8 Bit DIP switch for address.
4. RJ45 10Base - T/100Base -TX Ethernet ports
5. Guiding / Alignment pin (Type M6)

TITLE: PIXEL MATRIX MODULE-TYPE 1 SIDE VIEW	
NO SCALE REV: 10/10/2019	A1-18
CMS 700 SERIES	

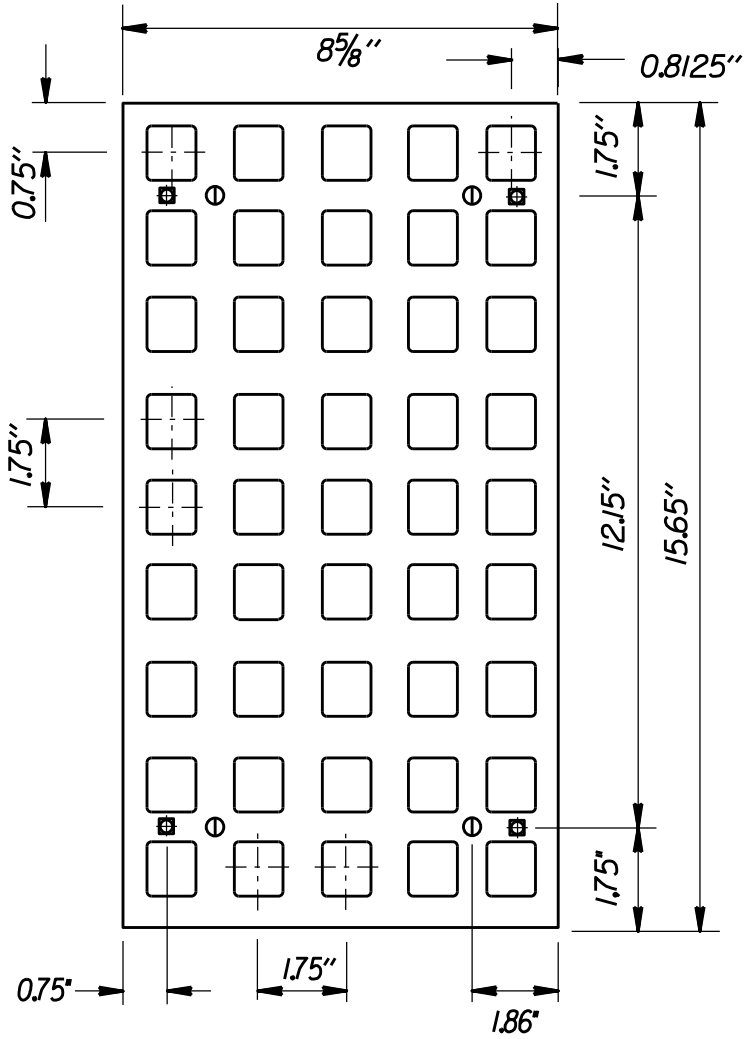

FRONT VIEW

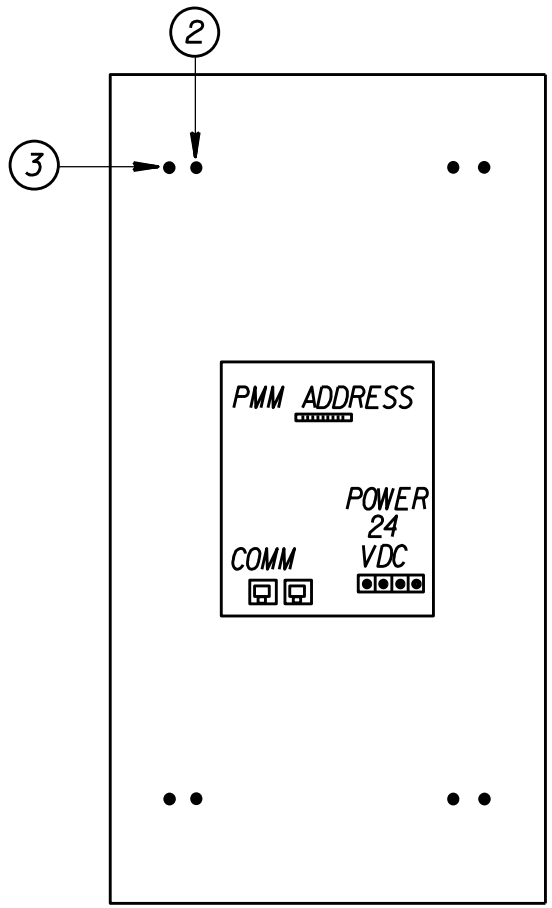

REAR VIEW

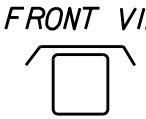

Typical LED pixel with hood

NOTES:

1. Pixel array shall be symmetrical within the panel.
2. Captive screws (Type M6)
3. Guiding / Alignment Pins (Type M6)

TITLE: PIXEL MATRIX MODULE-TYPE 2 FRONT AND REAR VIEWS	
NO SCALE REV: 10/09/2019	A1-19
CMS 700 SERIES	

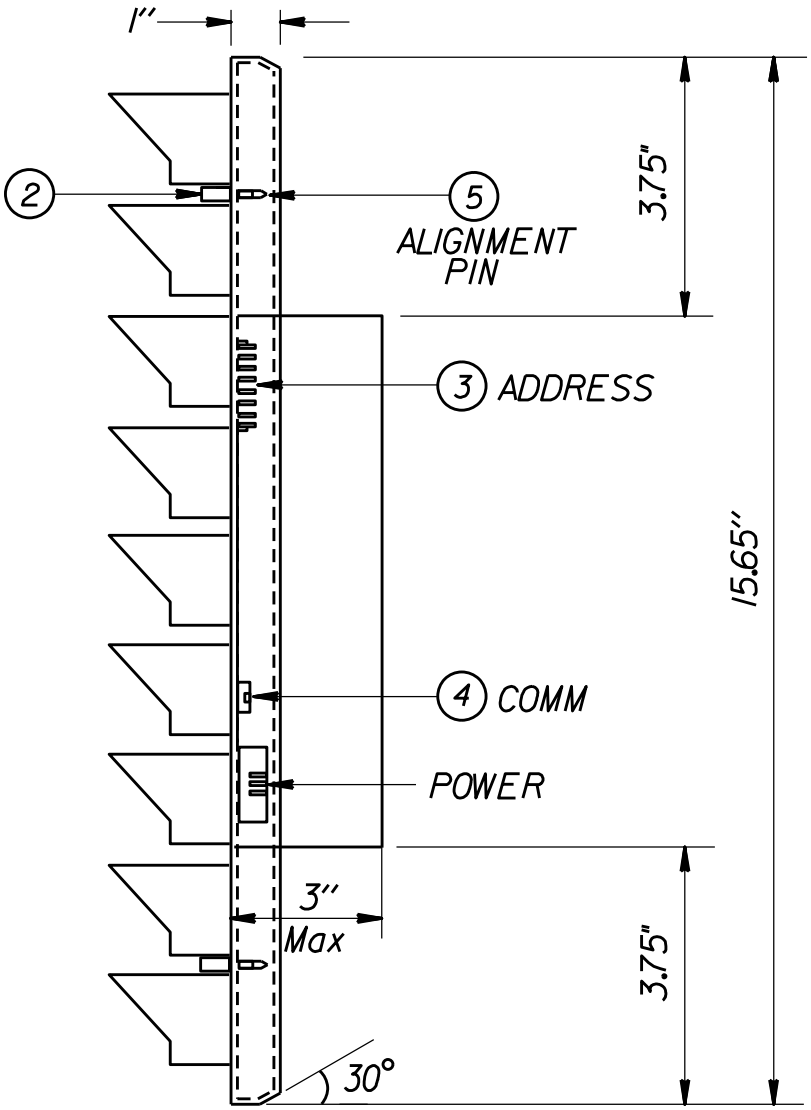

SIDE VIEW

NOTES:

1. All pixels shall be mounted to the same PC board.
2. Captive thumbscrews (type M6)
3. 8 Bit DIP switch for address.
4. RJ45 10Base - T/100Base -TX Ethernet ports
5. Guiding / Alighment pin (Type M6)

TITLE: PIXEL MATRIX MODULE-TYPE 2 SIDE VIEW	
NO SCALE REV: 10/10/2019	A1-20
CMS 700 SERIES	

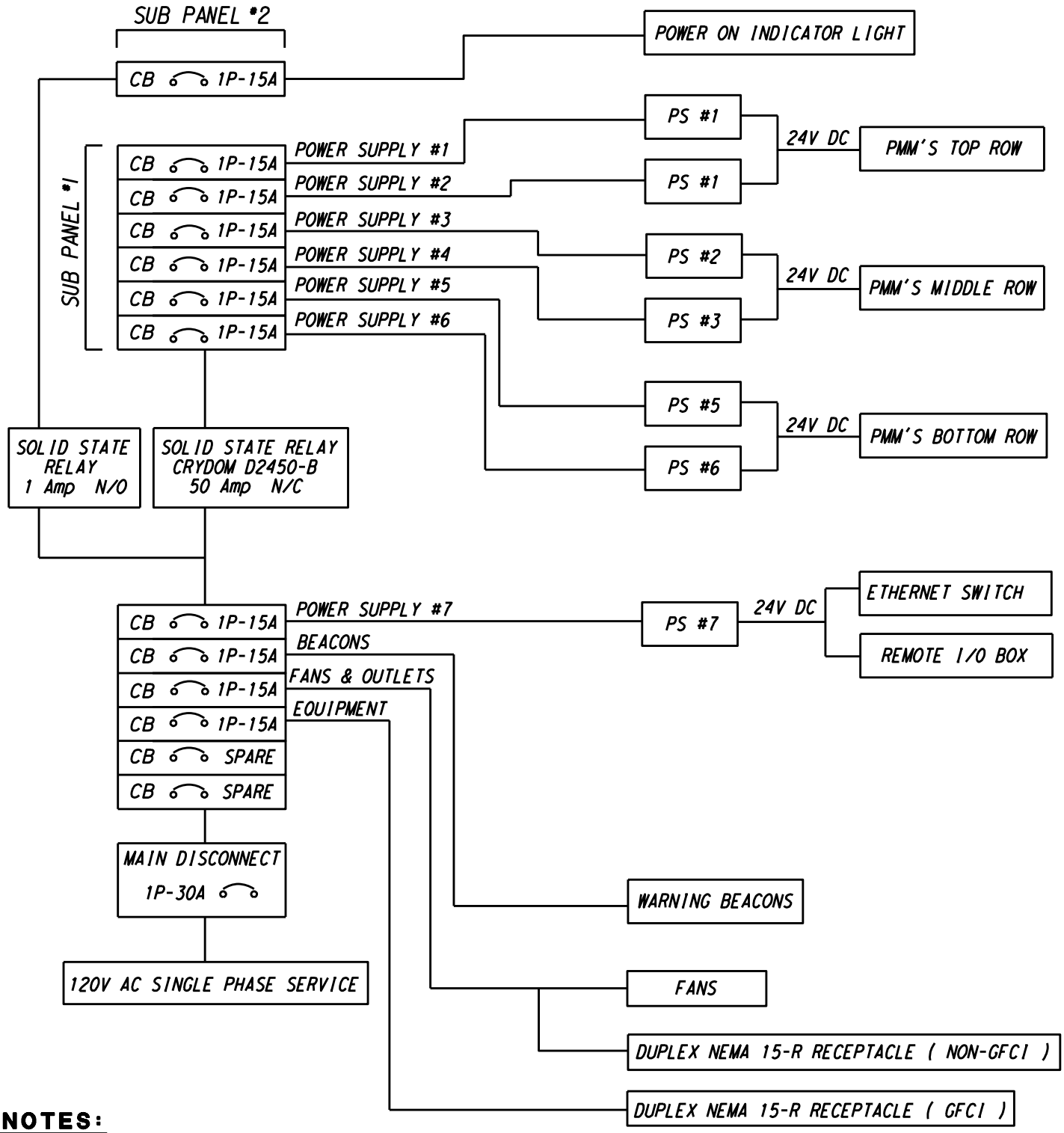

NOTES:

1. The Ethernet switche and Remote I/O box can be powered by either 24V DC or 120V AC
2. When Sub Panel #1 is powered on Sub Panel #2 is powered off.
3. Solid state relays are controlled by the remote I/O box beacon 3 and 4 output.

TITLE: POWER DISTRIBUTION ASSEMBLY BLOCK DIAGRAM	
NO SCALE REV: 09/20/2019	A1-26
CMS 700 SERIES	

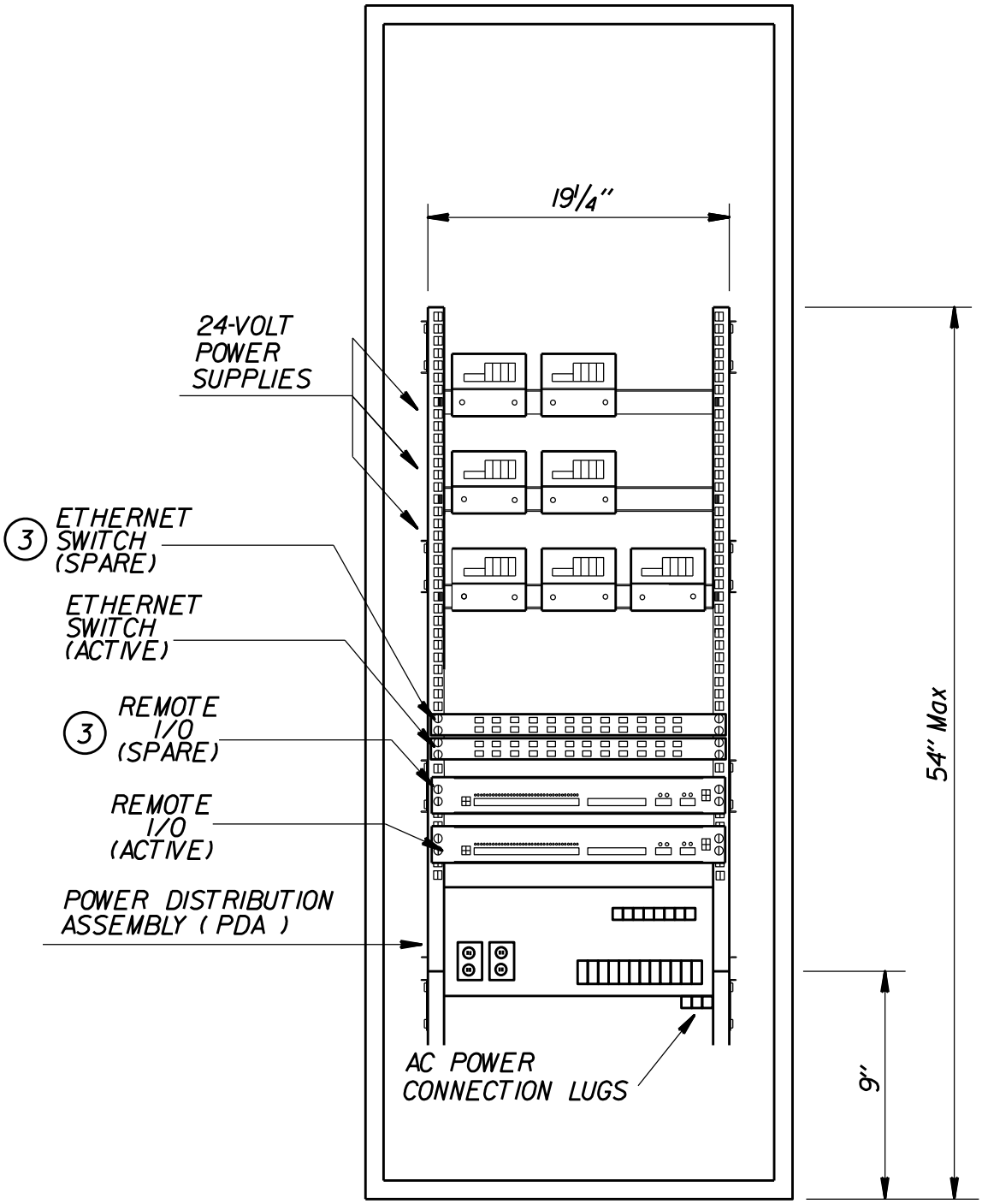

NOTES:

1. Rack depth 9" Max.
2. Rack shall be no closer than 8" from the edge of sign
3. Spare parts shall be fully tested for functionality then unplugged from all cables including power source

TITLE: IN-SIGN 19'' EQUIPMENT RACK	
NO SCALE REV: 11/20/2019	A1-27
CMS 700 SERIES	

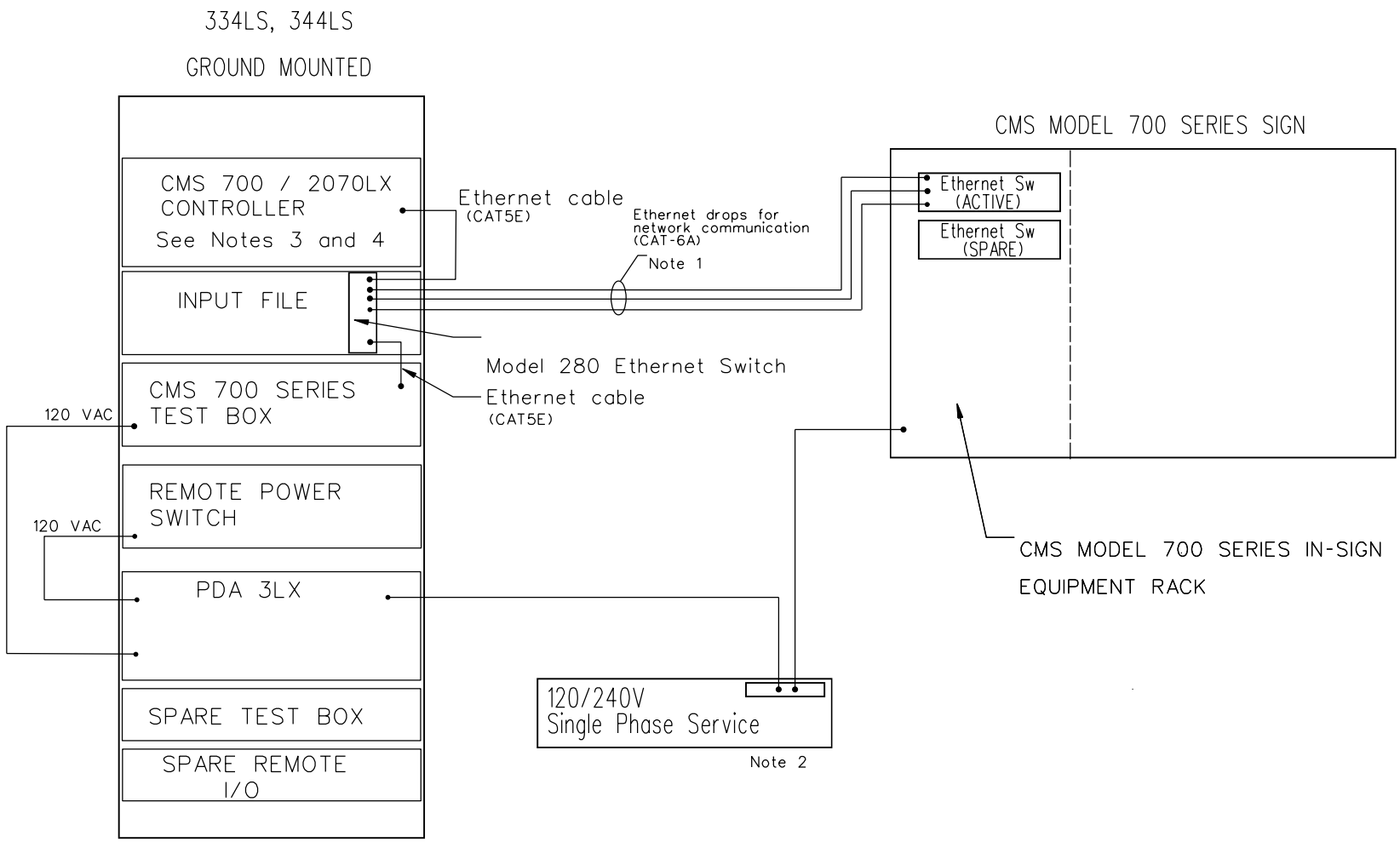

NOTES:

1. Ethernet drops (3 minimum) for CMS-to-Cabinet network communication. CAT-6A cable has a length limit of 100 meters. If longer cable is required, use proper equipment to maintain communication signal integrity
2. Incoming power to Service Cabinet, 120/240 Single Phase.
3. Sign Controller rated at 24VDC or 120VAC.
4. If sign controller is rated at 24VDC, an industrially-rated 120V AC adapter is required. The sign controller is to be powered from the Remote Power Switch

TITLE:
CMS MODELS 700 SERIES
SYSTEM WIRING DIAGRAM

NO SCALE
REV: 11/20/2019

CMS 700 SERIES

A1-29

FRONT VIEW

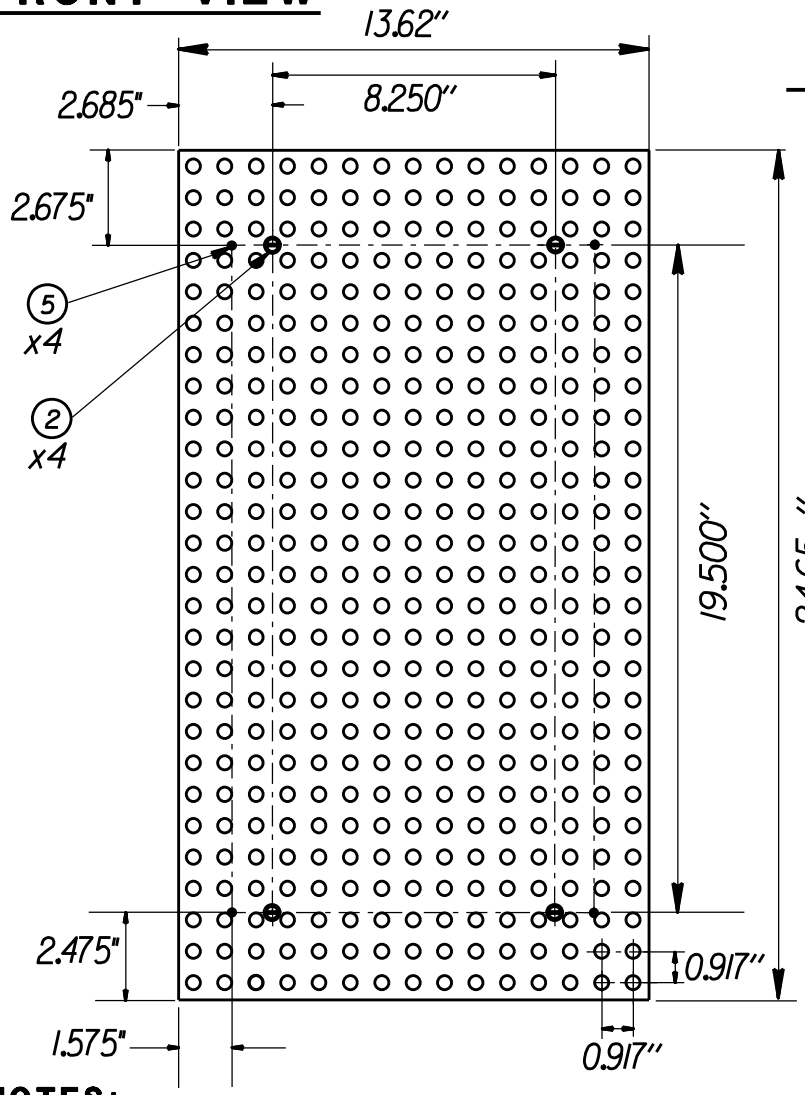

SIDE VIEW

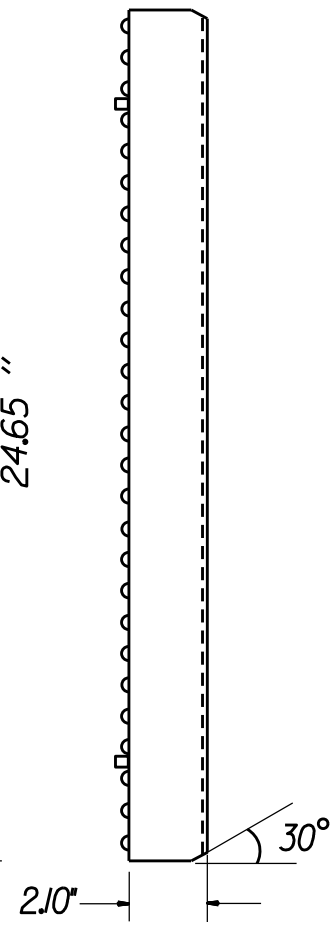

REAR VIEW

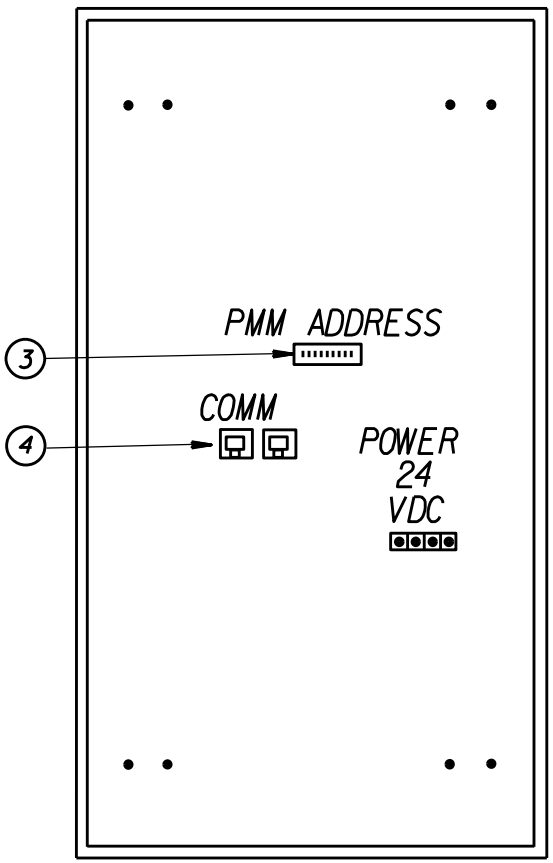

NOTES:

1. Pixel array shall be symmetrical within the panel.
2. Captive thumbscrews (type M6)
3. 8-Bit DIP switch for address
4. RJ45 10Base-T / 100Base-TX Ethernet ports
5. Guiding / Alighment Pins (type M6)

TITLE: PIXEL MATRIX MODULE-TYPE 3 FRONT, SIDE, AND REAR VIEWS	
NO SCALE REV: 10/09/2019	A1-30
CMS 700 SERIES	

FRONT VIEW

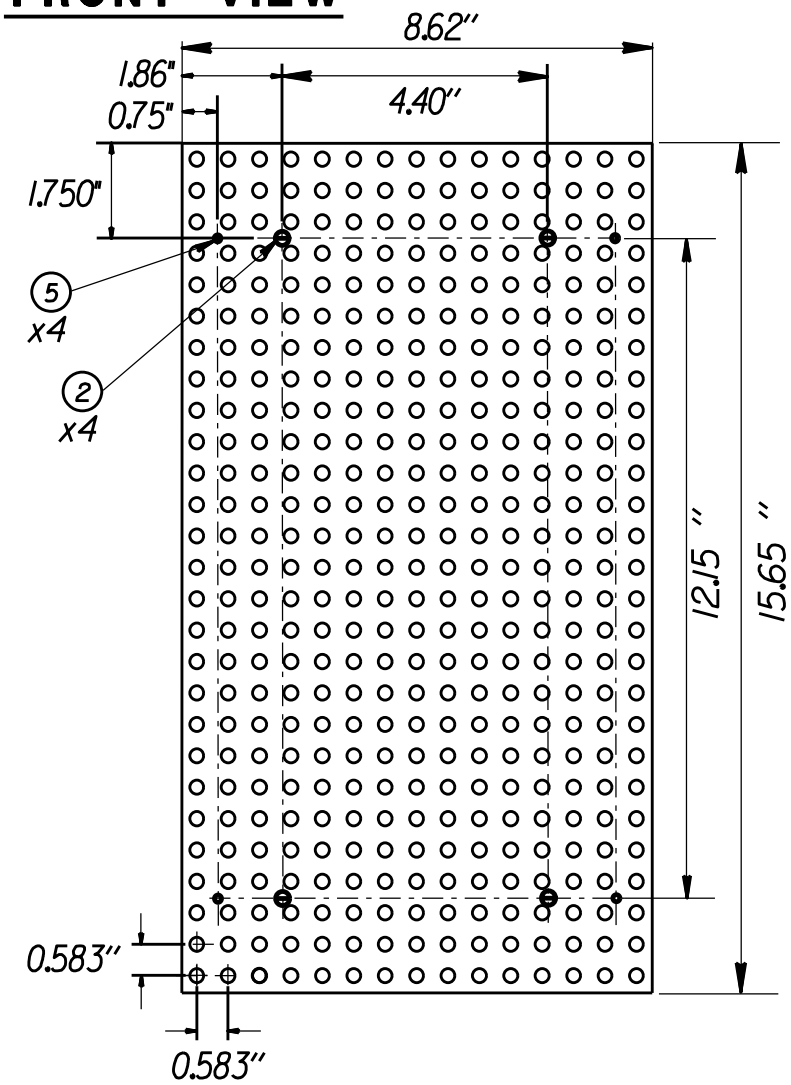

SIDE VIEW

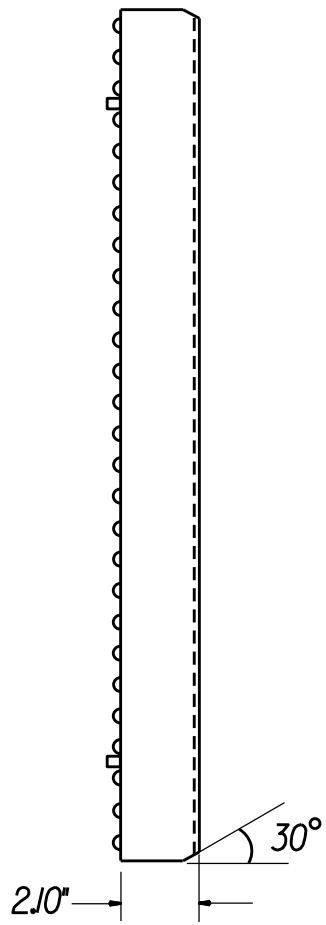

REAR VIEW

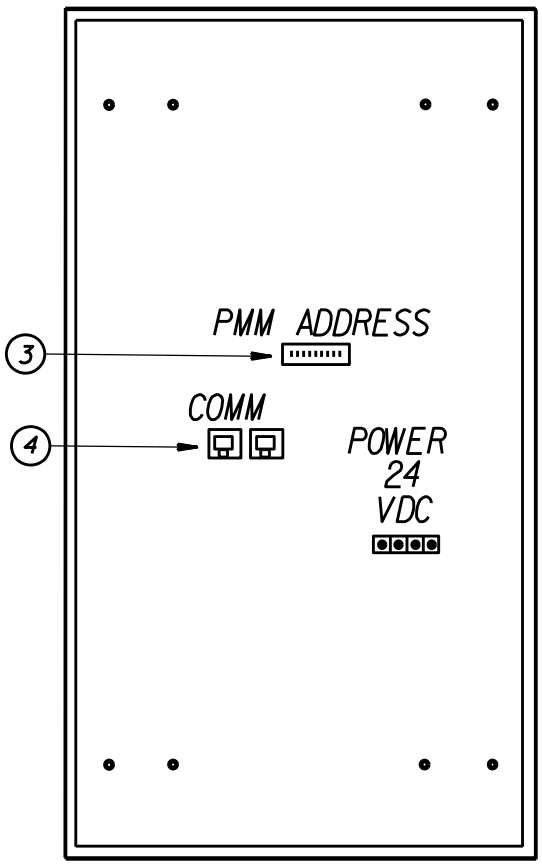

NOTES:

1. Pixel array shall be symmetrical within the panel.
2. Captive screws (Type M6)
3. 8-Bit DIP switch for address
4. RJ45 10Base-T / 100Base-TX Ethernet ports
5. Guiding / Alignment Pins (Type M6)

TITLE: PIXEL MATRIX MODULE-TYPE 4 FRONT, SIDE, AND REAR VIEWS	
NO SCALE REV: 10/09/2019	A1-31
CMS 700 SERIES	