Appendix

Table of Contents

Appendix A – AASHTO 1
Appendix B – Agreements 2
Appendix C – FHWA 30
Appendix D – Forms 31
Appendix E – Guidelines 32
Appendix F – Miscellaneous 104
Appendix G – District Encroachment Permit Offices 108
Appendix H – References 109
Appendix I – Resolutions 116
Appendix J – Road Connections and Driveways 127
Appendix K – Special Provisions 130

© 2018 California Department of Transportation. All Rights Reserved.

Appendix A – AASHTO

Table of Contents

The following documents are available for purchase at: https://store.transportation.org/

- A Policy on the Accommodation of Utilities Within Freeway Right-of-Way, 2005
- A Guide for Accommodating Utilities Within Highway Right-of-Way, 2005

© 2018 California Department of Transportation. All Rights Reserved.

Appendix B – Agreements

Table of Contents

AGREEMENT WITH CITY/COUNTY TO ISSUE ROUTINE ENCROACHMENT PERMITS ON CONVENTIONAL HIGHWAYS B-1

Cooperative Agreements:

Please contact Project Management Delivery Improvement and Agreements (ODIA)

MEMORANDUM OF AGREEMENT AMONG THE CALIFORNIA HIGHWAY PATROL, THE CALIFORNIA DEPARTMENT OF TRANSPORTATION AND THE CALIFORNIA FILM COMMISSION: FILMING ON CALTRANS PROPERTIES B-4

Maintenance Agreements:

Please contact the appropriate District Maintenance Agreement Coordinator for the following:

- Freeway Maintenance Agreement
- Electrical Maintenance Agreement
- Delegated Maintenance Agreement
- Landscape Maintenance Agreement
- Project Specific Maintenance Agreement
- Work for other Agreement

Kiosk Advertising/Display Agreement (TR-0401) ..... See CEFS

Newspaper Distribution Agreement (TR-0150) ..... See CEFS

© 2018 California Department of Transportation. All Rights Reserved.

AGREEMENT WITH (CITY/COUNTY OF _____) TO ISSUE ROUTINE ENCROACHMENT PERMITS ON CONVENTIONAL HIGHWAYS

THIS AGREEMENT, made and executed in duplicate this ___ day of 20___, by and between the State of California acting by and through the Department of Transportation, hereinafter referred to as State and the (City/County of hereinafter referred to as (City/County).

WITNESSETH:

A. RECITALS

The Parties hereto desire to provide for the (City/County) to perform particular encroachment permit functions on (designated State highways) within the jurisdictional limits of (City/County), to wit, the issuance of routine encroachment permits and the control and inspection of work performed pursuant to said permits, as provided for in Sections 130 and 676 of the Streets and Highways Code.

B. AGREEMENT

This Agreement shall supersede any previous AGREEMENT WITH CITY/COUNTY OF _____ TO ISSUE ROUTINE ENCROACHMENT PERMITS ON STATE HIGHWAYS and/ or AMENDMENTS thereto.

C. In consideration of the mutual covenants and promises herein contained it is mutually agreed that (City/County);

1. Shall use State's Standard Encroachment Permit forms.
2. Shall follow State's policies as contained in State's Encroachment Permit Manual. A copy of said Manual will be furnished upon execution of this Agreement.
3. Shall follow State's design standards unless (City/County's) standards are more restrictive. In the event of conflict as to interpretation, State's standards shall apply.
4. May issue Encroachment Permits for the following routine encroachments without State's prior approval:

   a.

   b.

   c. (etc.)

© 2018 California Department of Transportation. All Rights Reserved.

5. Shall collect sufficient fees from the permittee to cover its cost of permit administration, inspection and other permit related costs. No cost for (City/County) administration, review or inspection shall be charged to or borne by the State.
6. (City/County) shall assign qualified personnel to review permit application, plans and specifications, to revise plans and produce permit with appropriate specifications, and to provide construction inspection or monitoring and conduct final inspection of all work performed within the highway right-of-way.
7. Shall keep on file, subject to State's inspection, all permits issued on State highways; and shall forward copies of all issued permits, along with Notices of Completion, As-Built plans (if any) and all other related data to State's District Permit Engineer immediately upon completion of the work permitted or upon the expiration of the permit.

D. LEGAL RELATIONS AND RESPONSIBILITIES

Nothing in the provisions of this agreement is intended to created duties or obligations to or rights in third parties not parties to this contract or affect the legal liability of either party to the contract by imposing any standard of care respecting the maintenance of State highways different from the standard of care imposed by law.

It is understood and agreed that neither the STATE nor any officer or employee is responsible for any damage or liability occurring by reason of anything done or omitted to be done by the (CITY/COUNTY) under or in connection with any work, authority or jurisdiction delegated to the (CITY/COUNTY) under this agreement. It is understood and agreed that pursuant to Government Code Section 895.4 (CITY/COUNTY) shall defend, indemnify and save harmless the State of California, all officers and employees from all claims, suits or actions of every name, kind and description brought for or in account of injuries to or death of any person or damage to property resulting from anything done or omitted to be done by the (CITY/COUNTY) under or in connection with any work, authority or jurisdiction delegated to the (CITY/COUNTY) under this agreement.

The (CITY/COUNTY) waives any and all rights to any type of express and implied indemnity against the STATE, its officers and employees arising from any work, authority or jurisdiction delegated to the (CITY/COUNTY) under this agreement.

E. TERMS OF AGREEMENT

THIS AGREEMENT shall become effective and shall remain in full force and effect until amended or terminated. This Agreement may be amended or terminated at anytime upon mutual consent of the parties hereto. This Agreement may also be terminated by either party upon thirty (30) days written notice to the other party.

© 2018 California Department of Transportation. All Rights Reserved.

IN WITNESS WHEREOF, the parties hereto have set their hands and seals the day and year first above written.

(CITY/COUNTY) OF

BY_____

Approved as to form and procedure

STATE OF CALIFORNIA

DEPARTMENT OF TRANSPORTATION

_____

Attorney

Department of Transportation

BY _____

_____

City/County Attorney

© 2018 California Department of Transportation. All Rights Reserved.

MEMORANDUM OF AGREEMENT

Among
the California Highway Patrol,
the California Department of Transportation,
and
the California Film Commission:

FILMING ON CALTRANS' PROPERTIES

Agreement No. M01–0178

I. INTENT

A. It is the intent of the California Highway Patrol (CHP), the California Department of Transportation (Caltrans), and the California Film Commission (CFC) to enter into this Memorandum of Agreement (MOA), effective this 1st day of JUNE 2014, to establish (1) reasonable criteria for the approval of permits to allow filming on State of California highways, freeways, and Nonhighway Caltrans facilities, and (2) a consistent process for obtaining such approval.

A. Pursuant to Government Code section 14998.8, the Director of the CFC is the permitting authority for the use of State-owned property and State employee services for the purpose of making commercial motion pictures or still photography, commonly called film permits (Film Permits).

B. Therefore, the CHP, Caltrans, and the CFC hereby agree to the following process for issuing and inspecting specific Film Permits for filming, videotaping, or digital recording on State of California highways, freeways, and Nonhighway Caltrans facilities. The duties and responsibilities of the signatory parties to this MOA are hereby clarified and defined.

II. DEFINITION OF TERMS

Capitalized terms as used in this MOA have the following definitions:

A. "Access Controlled Highway" is any highway with full or partial restriction of access, allowing entry only at prescribed access points, usually designated as a freeway or expressway.

B. "Business Day" is a weekday that begins at 8 a.m. and concludes at 5 p.m., excluding weekends, State-observed holidays, and State-mandated furlough days. If an application is forwarded to Caltrans by the CFC beyond these hours on a given Business Day, the period defined as a Business Day will end at 5 p.m. the following Business Day.

C. "Caltrans" is the California Department of Transportation.

© 2018 California Department of Transportation. All Rights Reserved.

D. "Caltrans Encroachment Permit" is a revocable authorization issued by Caltrans allowing the specified presence for work by others on State highway rights-of-way.

The following types of Caltrans Encroachment Permits may be issued for commercial filming activities:

1. An "FI Permit" is a Caltrans Encroachment Permit authorizing filming involving moving vehicles with CHP escort or intermittent traffic control ("ITC"), normally not to exceed five minutes in the rights-of-way of "Conventional Highways" as defined in this MOA.

2. An "FL Permit" is a Caltrans Encroachment Permit authorizing filming within Conventional Highway rights-of-way, including the use of ITC exceeding five minutes, lane closures, detours, etc.

3. An "FO Permit" is a Caltrans Encroachment Permit authorizing filming that does not affect moving traffic on State highway rights-of-way, including placement of cameras, equipment, and "No Parking" signs in Conventional Highway rights-of-way.

4. An "FR Permit Rider" is a document issued by Caltrans changing terms and conditions of the original Caltrans Encroachment Permit. Riders cannot allow work to exceed the special provisions of the original Caltrans Encroachment Permit. Significant changes may require Caltrans to issue a new permit in lieu of an FR Permit Rider.

5. An "FS Permit" is a Caltrans Encroachment Permit authorizing filming within Conventional Highway rights-of-way involving stunts, pyrotechnics, aircraft flying below 500 feet in altitude, or any filming within Access Controlled Highways.

6. An "FF Permit" is a Caltrans Encroachment Permit authorizing filming at a "Nonhighway Caltrans Facility" as defined in this MOA.

E. "Car-to-Car" filming is an industry term that involves a camera handheld or mounted on one registered motor vehicle while filming another "picture vehicle" in front of, behind, or beside the vehicle carrying the camera.

F. "CFC" is the California Film Commission.

G. "CFC Permit Application" is a document consisting of applicant information specific to the occupation or use of State-owned or State-operated property and/or services for the purpose of filming, and the general terms and conditions governing such activities.

H. "CHP" is the California Highway Patrol.

I. "Conventional Highway" is any highway other than Access Controlled Highways.

J. "Drive-bys" mean that cameras and sound devices that are recording images and sounds of a motor vehicle driving on State-administered freeways, highways, and roads are outside of the picture vehicle, with equipment on the side of the road or near the road.

© 2018 California Department of Transportation. All Rights Reserved.

K. "Driving Shots Within a Vehicle" means that all cameras and sound devices that are recording images and sounds are contained entirely within a registered motor vehicle moving with the flow of traffic whether on freeway, highway, or road. No camera is mounted or handheld outside of the windows of the car. The camera position cannot be in the driver's seat, on the driver of the vehicle, or obstruct the driver's view or control of the vehicle in any manner.

L. "Film Permit" is a document issued by the CFC authorizing commercial filming operations on State properties.

M. "FMRO" is the CHP Film Media Relations Officer.

N. "Insurance Coverage" means an insurance policy sufficient to reimburse the State for any user-caused damage to property and to provide adequate personal liability insurance coverage.

O. "ITC" means intermittent traffic control, intended to impede or stop the flow of public traffic, normally not to exceed five minutes at any one time.

P. "MOA" refers to this Memorandum of Agreement, No. M01-0178 and its amendment if any.

Q. "Nonhighway Caltrans Facilities" is defined to include any Caltrans facility or real estate property not part of any State highway or freeway system. Caltrans facilities include any office buildings, maintenance stations, maintenance facilities, Park and Ride lots, and houses used or operated by Caltrans.

R. "Notification of Closures" is required for a "Road Closure" as defined in this MOA. This Notification of Closures shall be done at least seven (7) calendar days in advance of a permitted closure.

1. The Permittee shall notify the local print/broadcast media and all affected entities with the local detour information; the Permittee's contact information shall also be provided. Affected entities may include the local permitting agency, local film commissions or offices, local law enforcement, transit agencies, fire departments, tribal governments, and/or other interested persons. The Permittee shall provide evidence of this notification to the CFC or Caltrans.

2. The Caltrans Public Information Officer (District PIO) of the district where activity is occurring will broadcast a press release for closure information pertaining to the State right-of-way.

© 2018 California Department of Transportation. All Rights Reserved.

S. Permits

1. "Complex Permit" is a Caltrans Encroachment Permit issued to the Permittee that involves any of the following activities:

   a. Ramp closure(s) with major local traffic detour.
   b. Freeway closure(s).
   c. Explosions, pyrotechnics, or other special effects or stunts that interfere with traffic.
   d. Aircraft or helicopters flying below 500 feet in altitude.
   e. Aircraft or helicopters landing on ramps, freeways, highways, or Nonhighway Caltrans Facility.

2. "Noncomplex Permit" is a Caltrans Encroachment Permit issued to the Permittee that requires ramp closure without detour or lane closure on a Conventional Highway that would require detour.

3. "Routine Permit" is any permit that is neither a Complex Permit nor a Noncomplex Permit.

T. "Permit Application Package" is a set of documents created and/or collected by the CFC upon receipt of a filming permit application, which shall include the following:

1. A complete CFC Permit Application.

2. If required, detour plans approved by the affected governmental agencies (cities, counties, and tribal governments).

3. If required, resolutions from all affected local governmental agencies indicating approval of the filming activity and any proposed detours. Other written approval for the filming from an individual delegated such approval authority may be submitted. The CFC will keep proof of delegated authority.

4. A letter of consent from each State contractor whose construction operations may be affected by the permitted filming activity.

5. A complete "Traffic Management Plan" for FL or FS Permits that involve Road Closures as defined in this MOA.

U. "Permittee" is the insured entity that has applied for a permit to film or use for commercial filming or photographic purposes State-owned or State-operated property or services.

V. "Road Closures" include any lane, onramp, offramp, full directional closure, or stoppage of traffic that exceeds five minutes.

W. "Rolling Traffic Break" consists of an intentional slowing of public traffic to a desired speed through the use of CHP pilot vehicles.

X. "State" is the State of California.

© 2018 California Department of Transportation. All Rights Reserved.

Y. "Stationary Camera Location" includes filming from a fixed location, not from or on a vehicle or vehicles moving with the normal flow of traffic on a highway.

Z. "Traffic Management Plan" is a document prepared by the Permittee to address and mitigate the impacts of a proposed Road Closure and associated detours. This document shall include reasonable and appropriate provisions for advance public notification and augmented transit, tow, and emergency services as needed.

III. INCORPORATION OF EXHIBITS

Exhibits A and B are attached to this MOA and by this reference are expressly incorporated into this MOA. The Exhibits consist of the following:

Exhibit A, General Terms and Conditions
Exhibit B, Signature of Parties

IV. COMMUNICATION

A. The CHP Contract Manager for this MOA is the Commander of the Research and Planning Section, (916) 843-3340.

The Caltrans Contract Manager for this MOA is the Chief of the Office of Permits, (916) 654-5548.

The CFC Contract Manager for this MOA is the Deputy Director of the CFC, (323) 860-2960, extension 136. In the event the position of Deputy Director is vacant, the CFC Contract Manager will be the Director of the CFC at extension 111.

B. All official communications to the CHP shall be directed to the attention of the Contract Manager or designee at the following address and telephone/fax numbers:

CHP Commander
California Highway Patrol
Research and Planning Section
601 North Seventh Street
Sacramento, CA 95811
Tel. (916) 843-3340
Fax (916) 322-3175

© 2018 California Department of Transportation. All Rights Reserved.

C. All official communications to Caltrans shall be directed to the attention of the Contract Manager or designee at the following address and telephone/fax numbers:

Chief, Office of Permits
California Department of Transportation
Division of Traffic Operations
1120 N Street, MS–36
Sacramento, CA 95814
Tel. (916) 654-5548
Fax (916) 653-6080

D. All official communications to the CFC shall be directed to the attention of the Contract Manager or designee at the following address and telephone/fax numbers:

Deputy Director
California Film Commission
7080 Hollywood Boulevard, Suite 900
Los Angeles, CA 90028
Tel. (323) 860-2960, ext. 136
Fax (323) 860-2972

V. CHP RESPONSIBILITIES

A. On an ongoing basis, the CHP will station a CHP officer at the CFC's office to act as liaison between the CHP, Caltrans and the CFC.

B. On an ongoing basis, the CHP will furnish to Caltrans and the CFC the name and telephone/fax numbers of the FMRO responsible for permit conditions enforcement, to enable the CFC to identify the FMRO named in each Film Permit.

C. On an ongoing basis, the CHP will inform Caltrans and the CFC of all complaints received by the CHP relative to filming on State highways within seven (7) Business Days of receipt of said complaint.

D. On an ongoing basis, the CHP will take responsibility for Vehicle Code compliance with respect to activities not requiring a Caltrans Encroachment Permit.

E. Upon receipt of a Permit Application Package from the CFC, the CHP will verbally advise the local law enforcement agency with jurisdiction over the film location, when applicable. Typically on large-scale projects, the FMRO will involve the local law enforcement agency in the pre-planning procedures.

F. During filming, the CHP will enforce the permit conditions set out in the Caltrans Encroachment Permit and in the Film Permit and will ensure public safety and convenience pursuant to the Permit Guidelines set forth in this MOA.

© 2018 California Department of Transportation. All Rights Reserved.

G. During filming, the CHP will ensure permitted work hours and locations are not significantly altered or changed without a Caltrans FR Permit Rider. The CHP may approve minor changes to approved filming activities or locations and to time extensions during daylight hours if (a) the change will allow the filming to be completed without impacting commute or peak traffic and safety, (b) the CHP approved changes are documented on the face of the issued Film Permit and sent to the CFC and Caltrans within three (3) Business Days, and (c) any change to location is still within the limits of the film site listed on the Film Permit and the Caltrans Encroachment Permit. The CHP may also modify or stop a permitted presence, work, or activity to ensure highway safety or efficient traffic flow.

H. After filming, the CHP will supply Caltrans and the CFC with written documentation of unusual occurrences and permit violations occurring during permitted activities within seven (7) Business Days of the occurrence or violation or within seven (7) Business Days of notification to the FMRO of the occurrence or violation, whichever is later. The documentation should be prepared by the FMRO named in the Film Permit.

I. The CHP shall notify Caltrans if for any reason the CHP is unable to have a representative present at a filming site.

VI. CALTRANS RESPONSIBILITIES

A. On an ongoing basis, Caltrans will staff a statewide film coordinator at the Caltrans District 7 office in Los Angeles to act as liaison between the CHP, Caltrans, and the CFC.

B. Caltrans' statewide film coordinator will inform the CHP and the CFC of any complaints received by Caltrans relative to filming on State highways within three (3) Business Days of receipt of the complaint by that statewide film coordinator, with a written confirmation within seven (7) Business Days.

C. Caltrans will process the Permit Application Package for filming and will, pursuant to Government Code section 14998.8(f), issue or deny a Caltrans Encroachment Permit within ten (10) Business Days of receipt of application.

D. Sufficient lead time is necessary to assess adequately the affects of a film activity to the operations of State highway facility. Caltrans reserves the right to deny with prejudice any application that does not comply with the following lead-time requirements.

1. Applications for Routine Permit shall be received by the CFC at least four (4) Business Days in advance of activity. Caltrans will make every effort to issue or deny a Caltrans Encroachment Permit within three (3) Business Days of receipt.

2. Applications for Noncomplex Permit shall be received by the CFC at least ten (10) Business Days in advance of activity. The allotted lead time is necessary to implement requirements of possible Notification of Closures properly. Caltrans will make every effort to issue or deny a Caltrans Encroachment Permit within five (5) Business Days of receipt.

© 2018 California Department of Transportation. All Rights Reserved.

3. Applications for Complex Permit shall be received by the CFC at least fifteen (15) Business Days in advance of the activity. The allotted lead time is necessary to allow Caltrans time to assess the merits of the proposed activity, detour plans, and associated Traffic Management Plans that are inherent in Complex Permits. Caltrans will make every effort to issue or deny a Caltrans Encroachment Permit within ten (10) Business Days of receipt.

4. Applications for FR Permit Riders and revisions to ongoing applications for Routine Permits should be received at least one (1) Business Day in advance of the activity. If proposed changes of a filming activity are significant, revisions to a Permit Application Package may, at Caltrans' discretion, require additional time to deny or approve the requested change.

E. Caltrans will deny a Caltrans Encroachment Permit, without prejudice, if the Permit Application Package is deemed incomplete. For Complex Permits, a package may be considered incomplete, and therefore denied, if a satisfactory Traffic Management Plan is not provided or if approval from affected entities is not provided.

F. Caltrans will notify the CFC immediately once it is determined that a Caltrans Encroachment Permit will not be issued or denied within the timeframe allotted in Government Code section 14998.8(f) and this MOA.

G. For the purpose of Road Closure required for Complex Permits, Caltrans' statewide film coordinator will perform duties as follows:

1. The statewide film coordinator will ensure that each Caltrans district film coordinator will provide the respective District PIO with closure information at least seven (7) calendar days in advance of a permitted closure. The District PIO will broadcast a press release for closure information pertaining to the State right-of-way.

2. The statewide film coordinator will ensure that each Caltrans district film coordinator will notify the Caltrans Office of Permits, Transportation Permits Issuance Branch, with the information at least ten (10) calendar days in advance of a permitted closure.

3. The statewide film coordinator will confirm that the Permittee has provided the Notification of Closures as defined in this MOA at least seven (7) calendar days in advance of closure.

4. The statewide film coordinator will ensure that each district film coordinator conduct a field check to ensure that advance notification signs are in place seven (7) calendar days in advance of the activity.

H. Caltrans' statewide film coordinator will communicate with the FMRO whenever a Permit Application Package is under review so the FMRO may determine the need for CHP involvement.

© 2018 California Department of Transportation. All Rights Reserved.

I. Upon the approval or denial of a Caltrans Encroachment Permit, Caltrans will provide the CFC with a calculation sheet setting out Caltrans' fees to be collected from the Permittee by the CFC, including review fees, inspection fees, and costs incurred by Caltrans associated with preliminary and operational meetings, special traffic analysis, identifying sites, and actual on-site operations.

J. The estimated cost becomes the final cost unless inspection time cost is changed during filming. No separate billing will be made if no changes occur.

K. Caltrans will endeavor to check and verify the information, as to the date, time, and activity, on the Caltrans Encroachment Permit to ensure accuracy prior to forwarding to the CFC.

L. During filming, Caltrans' inspector will enforce the provisions set out in the Caltrans Encroachment Permit for FL, FS, and FF Permits pursuant to the Permit Guidelines set forth in this MOA. Caltrans, at its sole discretion, may still inspect the filming operations for FI and FO Permits for quality control and training purposes; however, the Permittee is not charged for this effort.

M. The Caltrans Encroachment Permit may be modified or revoked immediately by Caltrans upon any violations of permit requirements or conditions or for operational needs or emergency situations.

VII. CFC RESPONSIBILITIES

A. On an ongoing basis, the CFC will act as the first point of contact and continuing point of contact for film industry representatives applying for a Film Permit.

B. On an ongoing basis, the CFC will inform filming industry representatives of Film Permit and Caltrans Encroachment Permit procedures and any changes to those procedures.

C. The CFC will inform filming industry representatives that no filming on State highways can take place prior to the issuance of a Film Permit and a Caltrans Encroachment Permit.

D. The CFC will inform the Permittee that the Caltrans Encroachment Permit may be modified or revoked immediately by Caltrans upon any violation of permit requirements or conditions or for operational needs or emergency situations arising on State highways.

E. The CFC will inform the Permittee that the CHP may also modify or stop a permitted presence, work, or activities to ensure highway safety or efficient traffic flow.

F. On an ongoing basis, the CFC will inform filming industry representatives of the Permit Guidelines for filming on Conventional Highways, Access Controlled Highways, and Nonhighway Caltrans Facilities set forth in this MOA.

© 2018 California Department of Transportation. All Rights Reserved.

G. On an ongoing basis, the CFC will inform applicants of the lead time required to process a Caltrans Encroachment Permit, which is as follows:

   1. For a Routine Permit, applications shall be received by the CFC at least four (4) Business Days in advance of the activity.

   2. For a Noncomplex Permit, applications shall be received by the CFC at least ten (10) Business Days in advance of the activity.

   3. For a Complex Permit, applications shall be received by the CFC at least fifteen (15) Business Days in advance of the activity. A coordination meeting may be required in advance of the activity.

H. Immediately upon receipt of a CFC Permit Application, the CFC will create a Permit Application Package.

I. The CFC will submit a Permit Application Package to the Caltrans statewide film coordinator and to the FMRO for review and approval or denial.

J. Prior to issuing the Film Permit, the CFC shall collect all fees shown on the Caltrans calculation sheets submitted by Caltrans. The CFC shall deposit the fees in the Film Transfer Account, which was created in accordance with Government Code section 14998.8. The CFC shall disburse the fees to Caltrans to reimburse Caltrans for the actual costs associated with the issuance and inspection of Caltrans Encroachment Permits.

K. Prior to issuing the Film Permit, the CFC will ensure that there are no conflicts between the Caltrans Encroachment Permit and the Film Permit documents and that both documents are complete.

L. The CFC will issue the Film Permit and the Caltrans Encroachment Permit to the responsible film company representative and provide a copy to the CHP with a confirming copy to Caltrans.

M. The CFC is responsible for informing the Permittee that it is required to have the two permits in its possession at all times.

N. For purposes of Notification of Closures, the CFC will inform the Permittee that it is the responsibility of the Permittee to notify the local print/broadcast media and all affected entities about the local detour information. Affected entities may include the local permitting agency, local film commissions or offices, local law enforcement, transit agencies, fire departments, and/or other interested persons. The Permittee shall show evidence of Notification of Closures to the CFC or Caltrans at least seven (7) calendar days in advance of a permitted closure.

   The District PIO where film activity is occurring will broadcast a separate press release for closure information pertaining to the State right-of-way.

© 2018 California Department of Transportation. All Rights Reserved.

O. The CFC will inform the Permittee that no activity that will cause damage to State property shall be allowed. Use of pyrotechnics shall have approval from the State Fire Marshal and the local fire department having jurisdiction over the filming site. This clearance shall be indicated on the CFC Permit Application and/or the Caltrans Encroachment Permit. A licensed "Pyrotechnic Operator–Special Effects" shall be on location and in charge of all use, storage, and handling of special effect items.

P. The CFC will inform the Permittee that traffic control shall only be placed/performed by the CHP, Caltrans, or a California licensed Traffic Control Contractor.

VIII. SPECIAL PROVISIONS APPLICABLE TO ALL PARTIES

A. All routine contacts between the CHP, Caltrans, and the CFC with regard to permit matters covered by this MOA shall be directed through the FMRO, the Caltrans statewide film coordinator, and the CFC permit coordinator respectively.

B. Even though this MOA addresses the issuance and inspection of specific Film Permits for filming or videotaping on State highways, freeways, and Nonhighway Caltrans Facilities, the duties and responsibilities of the signatory parties to this MOA are limited to the duties listed under the section listing their respective responsibilities. Each of these agencies is not responsible or liable for the acts or duties of the other signatory agencies. Each of the agencies shall indemnify and hold harmless the other agencies in accordance with the indemnity provisions of this MOA.

C. The CHP, Caltrans, and the CFC will respond to all public complaints regarding filming on State highways within a timely manner upon soliciting input from the other agencies.

D. The CHP, Caltrans, and the CFC shall independently train all of their employees involved in the Film Permit process in the operation of this MOA.

E. The CHP, Caltrans, and the CFC shall hold meetings, as needed, involving the FMRO; the Caltrans statewide film coordinator, and the CFC Deputy Director or designees to review current procedures and areas of concern. Upon the mutual agreement of the parties, individual meetings may be canceled.

F. The CHP, Caltrans, and the CFC will check and verify that all film activities comply with all of the provisions set forth in this MOA in Section IX, "Permit Guidelines for Filming on Conventional Highways," Section X, "Permit Guidelines for Filming on Freeway and Access Controlled Highways," and Section XI, "Permit Guidelines for Filming on Nonhighway Caltrans Facilities." The guidelines set out in Sections IX, X, and XI do not preclude the development of additional guidelines or criteria by local CHP commands and local Caltrans districts addressing safety, public convenience, highway operation, or other issues specific to their areas. All parties will be provided with copies of any such guidelines or criteria, and the parties can meet to discuss related issues as needed.

G. The CHP, Caltrans, and the CFC will work with the Permittee to identify public agencies and private parties that need to be notified by the Permittee of FL or FS Permits and other filming operations.

© 2018 California Department of Transportation. All Rights Reserved.

IX. PERMIT GUIDELINES FOR FILMING ON CONVENTIONAL HIGHWAYS

A. A Caltrans Encroachment Permit is required whenever filming activities are being conducted on a Conventional Highway, including posting of temporary "No Parking" signs; parking of equipment, trucks, trailers, and vehicles with steps or ramps; stringing cables on sidewalk shots; and driving scenes.

B. The CFC shall inform the Permittee that it is required to have its Film Permit and the Caltrans Encroachment Permit, when applicable, in its possession at all times while on Caltrans' rights-of-way. Noncompliance shall be cause for termination of activity. The CHP and/or Caltrans shall report all noncompliance to the CFC.

C. The Permittee shall supply properly functioning communication equipment in sufficient quantity to appropriate personnel involved in the filming operation and to the CHP and Caltrans on-site personnel.

D. The Permittee shall not direct lights or other illuminating devices toward traffic.

E. Stationary cameras shall be positioned on the sidewalk or ten (10) feet from the edge of the adjacent lane. Filming equipment and personnel are normally prohibited in median areas.

F. On State Conventional Highways, placement of "Temporary No Parking" signs requires proof of written authorization by the incorporated city or by the county in unincorporated areas, as appropriate. The Permittee's equipment such as buses, trucks, cars, and catering service equipment shall be parked off the traveled way, or in a manner approved by Caltrans, so that equipment and employees do not interfere with the free flow of pedestrian or vehicular traffic.

G. Filming involving only Driving Shots Within a Vehicle and Drive-bys, which conform to the Vehicle Code and are approved in advance by the CHP, may not require a Caltrans Encroachment Permit.

   1. A Caltrans Encroachment Permit for Drive-bys is necessary only when the recording devices and other film equipment are outside of those moving vehicles and on a Caltrans easement or highway right-of-way. If not on Caltrans property, then a permit from the authority having jurisdiction or private landowner is necessary. Drive-bys may or may not necessitate CHP escort.

   2. Filming involving Driving Shots Within a Vehicle may or may not necessitate CHP escort.

H. Filming involving Car-to-Car activities shall always involve a CHP escort and a Caltrans Encroachment Permit.

I. Prior approval by Caltrans of the filming operation and location is necessary.

© 2018 California Department of Transportation. All Rights Reserved.

J. Routine filming activities in which traffic control is performed by the CHP without a requirement for Caltrans to monitor the filming are classified as FI or FO Permits by Caltrans. After Caltrans issues an FI or FO Permit, the Permittee will coordinate its activities with the FMRO, and no additional Caltrans contact is necessary unless specifically required in the Caltrans Encroachment Permit. Caltrans, at its sole discretion, may still monitor the filming operations for quality control and training purposes; however, the Permittee will not be charged for this effort.

K. More complex filming activities and those involving stunts, staged accidents, pyrotechnics, wet downs, or aircraft flying below 500 feet in altitude are classified as FL or FS Permits by Caltrans, and monitoring for these activities is provided by Caltrans. After initial on-site inspection, and by mutual agreement, Caltrans may defer to the CHP to monitor the remaining activities without further Caltrans involvement. Such authorization will be stated on the FL or FS Permit. Filming with only ITC for involved aircraft does not usually require Caltrans monitoring.

L. Upon a request by Caltrans, or upon the CFC's determination of need, the CFC will be responsible for scheduling a preliminary meeting before issuance of a Caltrans Encroachment Permit and Film Permit when proposed filming activities require a Road Closure, stunts, or special effects. The CHP, Caltrans, the CFC, responsible film company representatives, and, when appropriate, other local authorities and law enforcement agencies shall attend this meeting to ensure that all plans are finalized and that all participants are aware of their individual responsibilities prior to the commencement of filming.

M. Upon a request by Caltrans, or upon the CFC's determination of need, the CFC will be responsible for scheduling an operational meeting immediately prior to complex FL or FS Permit filming operations. The CHP, Caltrans, the CFC, responsible film company representatives, and, when appropriate, other local authorities and law enforcement agencies shall attend this meeting to ensure that all plans are finalized and that all participants are aware of their individual responsibilities prior to the commencement of filming.

N. Hours of high volume or peak traffic flow shall be excluded from filming.

O. ITC, normally not to exceed five (5) minutes, if approved, shall be provided by the CHP.

P. Operational need or emergency situations may require that the roadway be reopened immediately. This decision shall be made by the CHP or Caltrans. If the roadway is reopened under these conditions, the CFC shall be notified as soon as possible. The notification shall be made by the CHP or Caltrans representative who made the decision. When both the CHP and Caltrans are present, the decision shall be made jointly. The CFC will notify the responsible film company representatives.

Q. Filming of activities on Conventional Highway rights-of-way from aircraft flying below 500 feet in altitude over the highway must be in compliance with Federal Aviation Administration (FAA) regulations and will not be permitted if public safety is jeopardized.

© 2018 California Department of Transportation. All Rights Reserved.

R. Wet downs of the roadway will not be permitted unless authorized within the Caltrans Encroachment Permit.

S. On Conventional Highways, the following guidelines apply to Road Closures, whether lane or full closures, unless specifically waived within the Caltrans Encroachment Permit Special Provisions:

1. Film sites identified for a complete closure shall be selected where cross streets are at a minimum and where adequate detours are available. A complete closure is defined as a full two-directional closure of an undivided roadway or a full one-directional closure of a divided roadway separated by a raised median.

2. Where detours or reduced access is proposed, a comprehensive Traffic Management Plan shall be prepared and submitted by the film company for review and approval by the CHP, Caltrans, and the affected local agencies before the Permit Application Package is considered complete.

3. Entities affected by a proposed detour or reduced access through their jurisdiction shall pre-approve the proposed detour through their jurisdiction prior to submittal to Caltrans. The final detour approval shall be attached to the Caltrans Encroachment Permit.

4. The proposed ingress and egress of all filming company personnel to the closed portion of the highway shall be preapproved by both the CHP and Caltrans. Only vehicles essential for the immediate filming operation will be allowed within full Road Closures.

5. Notification of Closures shall be done at least seven (7) calendar days in advance of any closure.

6. Advance notification signs for all highway closures shall be in place seven (7) calendar days in advance of the activity.

7. Film sites identified for single-lane or multiple-lanes closure (one direction) shall be allowed only with the CHP controlling the left turn and cross street traffic, unless waived within the Caltrans Encroachment Permit. Adequate detours as required by the CHP, Caltrans, and affected local agencies shall be available.

8. Advanced warning and detour signing is required where determined necessary by the CHP or Caltrans.

© 2018 California Department of Transportation. All Rights Reserved.

X. PERMIT GUIDELINES FOR FILMING ON ACCESS CONTROLLED HIGHWAYS

A. A Caltrans Encroachment Permit for filming is required for filming activities on State freeways and Access Controlled Highways.

B. The CFC shall inform the Permittee that it is required to have its Film Permit and the Caltrans Encroachment Permit, when applicable, in its possession at all times while on Caltrans' rights-of-way. Noncompliance shall be cause for termination of activity. The CHP and/or Caltrans shall report all noncompliance to the CFC.

C. The Permittee shall supply properly functioning communication equipment in sufficient quantity to appropriate personnel involved in the filming operation and to the CHP and Caltrans on-site personnel.

D. The Permittee shall not direct lights or other illuminating devices toward traffic.

E. Filming involving only Driving Shots Within a Vehicle and Drive-bys, which conform to the Vehicle Code and are approved in advance by the CHP, may not require a Caltrans Encroachment Permit.

   1. A Caltrans Encroachment Permit for Drive-bys is necessary only when the recording devices and other film equipment are outside of those moving vehicles and on a Caltrans easement or highway right of way. If not on Caltrans property, then a permit from the authority having jurisdiction or private landowner is necessary. Drive-bys may or may not necessitate CHP escort.

   2. Filming involving Driving Shots Within a Vehicle may or may not necessitate CHP escort.

F. Only in unusual cases will Caltrans inspect routine filming activities with only Rolling Traffic Breaks performed by the CHP. After Caltrans has completed its review and a Film Permit and the Caltrans Encroachment Permit are issued, the Permittee will coordinate its activities with the FMRO, and no additional Caltrans contact is necessary unless specifically required by the permit.

G. More complex filming activities and those involving aircraft flying below 500 feet in altitude over State highway rights-of-way are monitored by Caltrans. After initial on-site inspection, and by mutual agreement with the CHP representative, the Caltrans representative may defer to the CHP to monitor the remaining activities without further Caltrans involvement.

H. Upon a request from the CHP, Caltrans, or the CFC, the CFC will be responsible for scheduling a preliminary meeting before issuance of a Caltrans Encroachment Permit and Film Permit when proposed filming activity will take place on a State freeway. The CHP, Caltrans, the CFC, responsible film company representatives, and, when appropriate, other local authorities and law enforcement agencies shall attend this meeting to determine freeway location feasibility, the number of personnel required, traffic control needs, timing of filming, and other required provisions. For Complex Permits, this meeting shall be held at least fifteen (15) Business Days in advance of the activity.

© 2018 California Department of Transportation. All Rights Reserved.

I. Upon a request from the CHP, Caltrans, or the CFC, the CFC will be responsible for scheduling an operational meeting immediately prior to a freeway closure. The CHP, Caltrans, the CFC, responsible film company representatives, and, when appropriate, other local authorities and law enforcement agencies shall attend this meeting to ensure that all plans are finalized and that all participants are aware of their individual responsibilities prior to the commencement of filming.

J. Hours of high volume or peak traffic flow shall be excluded from filming.

K. All approved Road Closures shall be done only by a California-licensed Traffic Control Contractor using State specifications and standards. Rolling Traffic Break control shall be provided by the CHP. Stunts, temporary modification of traffic regulatory devices, pyrotechnics, and wet downs are only authorized during full Road Closures and only with specific written authorization in the Caltrans Encroachment Permit.

L. Operational need or emergency situations may require that the roadway be reopened immediately. This decision shall be made by the CHP or Caltrans. If the roadway is reopened under these conditions, the CFC shall be notified as soon as possible. The notification shall be made by the CHP or Caltrans representative who made the decision. When both CHP and Caltrans are present, the decision shall be made jointly. The CFC will notify the responsible film company representatives.

M. On full directional closures, the following guidelines apply to State freeways or Access Controlled Highways unless specifically waived in the Caltrans Encroachment Permit:

1. Whenever possible, the area identified shall be the "end" portion of a freeway, one to three miles in length.

2. A comprehensive Traffic Management Plan shall be prepared and submitted by the film company for review and approval by the CHP, Caltrans, and the affected local agencies before the Permit Application Package is considered complete.

3. Entities affected by a proposed detour or reduced access through their jurisdiction shall pre-approve the proposed detour through their jurisdiction prior to submittal to Caltrans. The final detour approval shall be attached to the Caltrans Encroachment Permit.

4. The proposed ingress and egress of all filming company personnel to the closed portion of the highway shall be preapproved by both the CHP and Caltrans.

5. The filming company's base of operations shall be located outside the State's operating rights-of-way. Only vehicles essential for the immediate filming operation will be allowed within full Road Closures.

6. Notification of Closures shall be done at least seven (7) calendar days in advance of any closure.

© 2018 California Department of Transportation. All Rights Reserved.

7. Caltrans requires at least ten (10) calendar days' notice to notify the Caltrans Office of Permits, Transportation Permits Issuance Branch, of any freeway or ramp closures.

8. Advance notification signs for all highway and freeway closures shall be in place seven (7) calendar days in advance of the activity.

N. The following guidelines apply to a Rolling Traffic Break on State freeways or Access Controlled Highways unless specifically waived in the Caltrans Encroachment Permit:

1. Adequate on and offramps must be available for CHP units to create Rolling Traffic Breaks that will provide space for the filming company to enter and exit the freeway safely.

2. The highway shall have either a median barrier or a 30-foot or wider median area.

3. Advanced warning and detour signing is required when determined necessary by the CHP or Caltrans.

4. The CHP has final responsibility for traffic control and operational coordination with the filming company. Caltrans shall seek the CHP's input prior to permit issuance relating to a Rolling Traffic Break to ensure that the CHP can provide for a safe filming operation.

O. The following guidelines apply to a full ramp closure on State freeways or Access Controlled Highways unless specifically waived in the Caltrans Encroachment Permit:

1. Ramp closures should be performed during time of low traffic volumes.

2. The Permittee shall not place equipment, lay cables, or park vehicles over State traffic signals or other forms of vehicle loop detectors.

3. Adequate alternate on- and offramps shall be available at a reasonable distance from the ramp(s) to be closed to provide access to local facilities.

4. Affected local governmental agencies shall formally concur in the ramp closure, access denial, and related traffic control, and such authorization shall be attached to the Caltrans Encroachment Permit.

5. Notification of Closures shall be done at least seven (7) calendar days in advance of any closure.

6. Caltrans requires at least ten (10) calendar days' notice to notify the Caltrans Office of Permits, Transportation Permits Issuance Branch, of any freeway or ramp closures.

7. Advance notification signs for freeway closures shall be in place seven (7) calendar days in advance of the activity.

© 2018 California Department of Transportation. All Rights Reserved.

P. The following guidelines apply to Stationary Camera Locations on State freeways or Access Controlled Highways, unless specifically waived in the Caltrans Encroachment Permit:

1. Film company vehicles, personnel, cameras, and equipment shall remain a safe and reasonable distance, to be determined by the CHP and/or the Caltrans Inspector, from the edge of the roadway unless protected by adequate existing barriers or other means approved by Caltrans.

2. Only persons associated with the filming company are allowed at Stationary Camera Locations.

3. When appropriate, advance-warning signs shall be provided, placed, and removed by the Permittee's private traffic control company.

4. The CHP shall control access to and from the Stationary Camera Location for individuals associated with the filming operation.

5. Vehicles being filmed shall enter the roadway at the first appropriate upstream onramp, and exit at the first appropriate downstream offramp.

6. Vehicles being filmed shall not stop or slow in the flow of traffic, in the median, or on the shoulder.

7. Stationary cameras shall be positioned on the sidewalk or at least ten (10) feet from the edge of the adjacent lane. Filming equipment and personnel are normally prohibited in median areas.

Q. The following guidelines apply to film operations on over-crossing structures of State freeways or Access Controlled Highways unless specifically waived in the Caltrans Encroachment Permit:

1. Filming activities on over-crossing structures require a filming permit.

2. Filming activities on structures with no connecting freeway ramps, and not affecting the structure or freeway traffic, are generally monitored by local authorities, while filming activities on structures with connecting ramps or affecting freeway traffic are generally monitored by the CHP and Caltrans.

3. Equipment shall not hang or project over the structure.

4. The Permittee shall not mount or strap equipment to the structure.

5. Pedestrian travel must remain unobstructed or have safe alternate facilities.

6. Traffic control on structures with connecting freeway ramps shall conform to Caltrans standards and specifications.

© 2018 California Department of Transportation. All Rights Reserved.

7. Traffic control on structures with no connection to freeway ramps may conform to local requirements and specifications.

8. The Permittee shall not place equipment, lay cables, or park vehicles over State traffic signal or other forms of vehicle loop detectors.

XI. PERMIT GUIDELINES FOR FILMING ON NONHIGHWAY CALTRANS FACILITIES

A. A Caltrans Encroachment Permit for filming is required when filming activities are conducted on Nonhighway Caltrans Facilities and shall be designated as an FF Permit.

B. The CFC shall inform the Permittee that it is required to have its Film Permit and the Caltrans Encroachment Permit, when applicable, in its possession at all times while on Caltrans' rights-of-way. Noncompliance shall be cause for termination of activity. The CHP and/or Caltrans shall report all noncompliance to the CFC.

C. The Permittee shall supply properly functioning communication equipment in sufficient quantity to appropriate personnel involved in the filming operation and to the CHP and Caltrans on-site personnel.

D. Before filming begins, Caltrans must approve the filming operation and location. The filming operation must not disrupt or interfere with any State business.

E. Upon a request by Caltrans, or upon the CFC's determination of need, the CFC will be responsible for scheduling a preliminary meeting before issuance of a Caltrans Encroachment Permit and Film Permit when proposed filming activities require significant stage work, stunts, special effects, or pyrotechnics. The CHP, Caltrans, the CFC, responsible film company representatives, and when appropriate, other local authorities and law enforcement agencies shall attend this meeting to ensure that all plans are finalized and that all participants are aware of their individual responsibilities prior to the commencement of filming.

F. When the filming is limited entirely within a Caltrans or other Caltrans-owned or maintained State building, the CHP will not be assigned unless requested or there is an identified need. Caltrans will be providing inspection.

G. Permits without significant stage work, stunts, and pyrotechnics may be monitored by the CHP for quality control, safety, and security, and no additional Caltrans contact is necessary unless specifically stated in the Caltrans Encroachment Permit.

H. Permits in which filming activities require significant stage work, stunts, or pyrotechnics will require inspection by the CHP and Caltrans, and the Permittee will be charged accordingly. After initial on-site inspection, and by mutual agreement, Caltrans may defer to the CHP the remaining monitoring activities without further Caltrans involvement.

© 2018 California Department of Transportation. All Rights Reserved.

EXHIBIT A

GENERAL TERMS AND CONDITIONS

1. AGREEMENT PERIOD

   This MOA shall take effect on the date specified on the face sheet and shall terminate without cause only upon the issuance of a thirty (30) days written notice by any parties to the other two parties involved.

2. PAYMENT

   Each party will assume all costs incurred in the performance of this MOA, except to the extent that those costs are passed on to the Film Permit holders.

   The CHP and the CFC agree to provide the services covered in this MOA at no cost to Caltrans. Caltrans services are contingent upon the allocation of sufficient resources in the Annual State Budget Act and by the California Transportation Commission.

3. APPROVAL

   This MOA is not valid until signed by all parties.

4. AMENDMENT

   No amendment or variation of the terms of this MOA shall be valid unless made in writing, signed by the parties, and approved as required. No oral understanding or agreement not incorporated in the MOA is binding on any of the parties.

5. SUBCONTRACTING

   No subcontracting is authorized by this MOA.

6. AUDIT

   The parties to this MOA agree that the other parties, the Department of General Services, the Bureau of State Audits, or their designated representatives shall have the right to review and to copy any records and supporting documentation pertaining to the performance of this MOA. The parties agree to maintain such records for possible audit for a minimum of three (3) years after the termination of the MOA.

© 2018 California Department of Transportation. All Rights Reserved.

7. INDEMNIFY AND HOLD HARMLESS

A. Neither the CHP, CALTRANS nor any officer or employee thereof is responsible for any injury, damage or liability occurring by reason of anything done or omitted to be done by the CFC under or in connection with any work, authority, or jurisdiction conferred upon the CFC under this MOA. It is understood and agreed that the CFC will fully defend, indemnify and save harmless the CHP, CALTRANS and all their officers and employees from all claims, suits, or actions of every name, kind and description brought forth under, including, but not limited to, tortious, contractual, inverse condemnation or other theories or assertions of liability occurring by reason of anything done or omitted to be done by the CFC under this MOA.

B. Neither, CALTRANS, the CFC nor any officer or employee thereof is responsible for any injury, damage or liability occurring by reason of anything done or omitted to be done by the CHP, under or in connection with any work, authority, or jurisdiction conferred upon the CHP under this MOA. It is understood and agreed that the CHP will fully defend, indemnify and save harmless CALTRANS, the CFC and all their officers and employees from all claims, suits, or actions of every name, kind and description brought forth under, including, but not limited to, tortious, contractual, inverse condemnation or other theories or assertions of liability occurring by reason of anything done or omitted to be done by the CHP under this MOA.

C. Neither the CHP, the CFC nor any officer or employee thereof is responsible for any injury, damage or liability occurring by reason of anything done or omitted to be done by CALTRANS, under or in connection with any work, authority, or jurisdiction conferred upon CALTRANS under this MOA. It is understood and agreed that CALTRANS will fully defend, indemnify and save harmless the CHP, the CFC and all their officers and employees from all claims, suits, or actions of every name, kind and description brought forth under, including, but not limited to, tortious, contractual, inverse condemnation or other theories or assertions of liability occurring by reason of anything done or omitted to be done by CALTRANS under this MOA.

8. TIMELINES

Time is of the essence in this MOA.

9. DISPUTES

The parties to this MOA shall continue with the responsibilities under this MOA during any dispute. Disputes shall be resolved at the lowest level, through the normal chain of command for respective individuals involved. If a dispute arises under this MOA that cannot be resolved at the Contract Manager level, the parties will elevate the dispute to the CHP Commissioner, the Caltrans Director and the Director of the CFC. Any dispute that cannot be resolved at that level will be elevated to the Secretary of the California State Transportation Agency and the Director of the Governor's Office of Business & Economic Development for final resolution.

© 2018 California Department of Transportation. All Rights Reserved.

EXHIBIT B

SIGNATURE OF PARTIES

IN WITNESS THEREOF, the parties agree to have executed this MOA on the day, month and year noted.

California Department of Transportation

Malcolm Dougherty, Director — Date: 3/27/2014

California Highway Patrol

Joe Farrow, Commissioner — Date: 4/14/14

California Film Commission

Amy Lemisch, Director — Date: 4/8/2014

© 2018 California Department of Transportation. All Rights Reserved.

STATE OF CALIFORNIA • DEPARTMENT OF TRANSPORTATION

KIOSK ADVERTISING/DISPLAY AGREEMENT

TR-0401 (REV. 05/2009)

The undersigned requests to place an advertisement/display within the Traveler/Tourist Information Center, hereinafter referred to as "kiosk" within the Safety Roadside Rest Area, and hereby agrees to the following conditions:

I have read the Kiosk Advertising/Display Guidelines, and conditions contained herein and agree to comply. And, understand that any failure to do so will result in termination of this agreement.

The requestor assumes full and complete responsibility and liability for the content of the advertisement/display, and shall agree to save, defend, indemnify and hold the State, the department, its officers, agents and employees harmless against any and all demands, claims, liability, damages and causes of action, including attorney's fees and all costs of any legal action occasioned by or resulting from injuries or losses to any person, firm or corporation, however occurring, resulting from their reliance on the person's or company's advertisement/display or from the form, content or representations contained therein.

The name on the agreement shall be that of the responsible party for that service or facility. Sub-contracting or third-party agreements **will not be allowed** for the placement of an advertisement/display. The requestor is required to be solely responsible for the service or facility, listed within the advertisement/display.

The advertisement/display shall be of a professional quality, printed on LEXAN or a comparable material pre-approved by the SRRA Coordinator, able to withstand adverse conditions, such as direct sunlight, rain or snow and able to endure the length of the agreement. The minimal size of the advertisement/display allowed shall be no less than 10" x 14," and a maximum size of 14" x 20." Advertisement /displays not enclosed within a protective casing shall be durable, and protected with an anti graffiti coating.

The requestor is responsible for the production of the advertisement/display at their sole cost and expense.

The format and content of the advertisement/display shall be provided for review. Upon approval in writing from the department, the advertisement/display shall not be changed or altered in any way without the written consent of the Department.

The requestor is seeking placement in the following SRRA:

NAME OF BUSINESS OR ORGANIZATION	OWNER OR REPRESENTATIVES NAME	PHONE NUMBER
ADDRESS		E-MAIL ADDRESS
OWNER OR REPRESENTATIVES SIGNATURE ▶		

NAME OF SAFETY ROADSIDE REST AREA	DIRECTION	TYPE OF ADVERTISEMENT/DISPLAY	FEE ASSESSED
			@ SEMI-ANNUALLY ☐
			@ ANNUAL ☐
			TOTAL:

DISTRICT USE ONLY

APPROVAL: YES ☐ NO ☐ COMMENTS: _____

CASHIER

INITIALS BY _____ DATE _____ ☐ CASH ☐ CHECK ☐ MONEY ORDER ☐ OTHER _____

AGREEMENT PERIOD

BEGINNING DATE _____ ENDING DATE _____

DISTRICT REPRESENTATIVES NAME	PHONE NUMBER
DISTRICT REPRESENTATIVES SIGNATURE ▶	E-MAIL ADDRESS

© 2018 California Department of Transportation. All Rights Reserved.

STATE OF CALIFORNIA • DEPARTMENT OF TRANSPORTATION

NEWSPAPER DISTRIBUTION AGREEMENT

TR-0150 (NEW 05/2009)

The undersigned newspaper distributor, hereinafter referred to as DISTRIBUTOR, desires to place and maintain **a newspaper** and newspaper vending machine, hereinafter referred to as "Machine", at certain identified safety roadside rest areas owned and operated by the State of California, Department of Transportation, hereinafter referred to as STATE. DISTRIBUTOR agrees that the following conditions apply:

1. DISTRIBUTOR shall comply with the applicable provisions of the California Administrative Code and directions from the State's representative as to the location and placement of each Machine and including its associated pedestal.

2. DISTRIBUTOR shall indemnify, protect and hold harmless the STATE, its officers and employees from all claims for injury to persons or damage to property by reason of the presence, location and/or maintenance of the Machine on STATE property, or by reason of claims based on acts of DISTRIBUTOR'S agents, employees or workers.

3. Maintenance of the Machine shall be the sole responsibility of DISTRIBUTOR, including any replacement or repair of Machine stolen or damaged by vandalism. DISTRIBUTOR shall begin to make necessary repairs within 48 hours after receipt of written or oral notification by STATE.

4. In the course of servicing a Machine, DISTRIBUTOR shall not deposit in or about any safety roadside rest area any wrapping paper, tying material or other litter, except to dispose of such material in a receptacle intended for that purpose. Any material that cannot be disposed of in available receptacles shall be immediately removed from the premises by DISTRIBUTOR.

5. If distribution of the newspaper is discontinued for thirty consecutive days, the DISTRIBUTOR shall remove the Machine and restore the site to its original condition.

6. If the Machine to be removed is on a pedestal shared with other machines, the DISTRIBUTOR shall modify the pedestal to properly accommodate the remaining machines.

7. If, after such discontinuance, or if the terms of this Agreement are violated, and DISTRIBUTOR fails to remove the Machine and restore the site within ten days after reasonable notice and demand, the STATE may thereafter remove the Machine and restore the site to its original condition and the DISTRIBUTOR agrees to reimburse the STATE for the reasonable costs of that removal and restoration.

8. The STATE reserves the right to close, temporarily or permanently, the safety roadside rest area for any reason without notification to the DISTRIBUTOR.

9. This Agreement shall commence on _____ 20___, and shall terminate on _____ 20___

The parties agree that only the following newspaper may be distributed:

NAME OF REST AREA(S)	TRAVEL DIRECTION	NEWSPAPER NAME

COMPANY NAME	CONTACT PERSON	PHONE NUMBER
ADDRESS		E-MAIL ADDRESS
DISTRIBUTOR'S SIGNATURE ▶		

DISTRICT USE ONLY

DISTRICT SRRA COORDINATOR / DISTRICT LANDSCAPE ARCHITECT NAME	PHONE NUMBER
DISTRICT SRRA COORDINATOR / DISTRICT LANDSCAPE ARCHITECT NAME ▶	E-MAIL ADDRESS

© 2018 California Department of Transportation. All Rights Reserved.

Appendix C – FHWA

Table of Contents

FHWA

FEDERAL-AID POLICY GUIDE
23 CFR 645B
https://www.fhwa.dot.gov/legsregs/directives/fapg/cfr0645b.htm

© 2018 California Department of Transportation. All Rights Reserved.

Appendix D – Forms

Table of Contents

The following public use forms can be found at: https://forms.dot.ca.gov/

- ADOPT-A-HIGHWAY PERMIT APPLICATION (TR-0103)
- CALTRANS/ELECTRIC UTILITY TREE REMOVAL REQUEST (TR-0168)
- CERTIFICATION BY CONTRACTOR (TR-0113)
- CERTIFICATION OF COMPLIANCE WITH AMERICANS WITH DISABILITIES ACT (ADA) (TR-0405)
- CERTIFICATION OF STRUCTURAL EXPERIENCE (TR-0133)
- CHAIN INSTALLER APPLICATION (TR-0106)
- CONSENT LETTER (TR-0131)
- DATA FOR HIGH VOLTAGE CABLES ON BRIDGES (DS-M-0080)
- ENCROACHMENT PERMIT ADMINISTRATIVE ROUTE SLIP (TR-0154)
- ENCROACHMENT PERMIT APPLICATION CHECK LIST (TR-0402)
- ENCROACHMENT PERMIT FEE CALCULATION SHEET (TR-0406)
- NOTICE OF COMPLETION (POST CARD) (TR-0128)
- NOTIFICATION OF NON-COMPLIANCE (TR-0134)
- PAYMENT BOND (TR-0018)
- PEER FORM (TR-0112)
- PERFORMANCE BOND (TR-0001)
- STANDARD ENCROACHMENT PERMIT APPLICATION (TR-0100)
- VISIBILITY IMPROVEMENT REQUEST (TR-0165)

For all internal (Caltrans') use forms, visit the Caltrans Electronic Forms System (CEFS).

© 2018 California Department of Transportation. All Rights Reserved.

Appendix E – Guidelines

Table of Contents

GUIDELINES FOR TRAFFIC SIGNAL CONTROLLERS AND INSPECTION E-1

SPECIAL FUNDED PROJECTS:
https://dot.ca.gov/programs/engineering-services/special-funded-projects-and-local-assistance

DEVELOPING SPECIAL FUNDED PROJECTS DEPUTY DIRECTIVE 23-R-2 (Rev 12/18) E-6

TRANSPORTATION MANAGEMENT PLAN GUIDELINES:
https://dot.ca.gov/programs/traffic-operations/tmp

ENCROACHMENT PERMIT - H SUPPORT DIAGRAM FOR AERIAL CROSSINGS (TR-0108) E-15

ENCROACHMENT PERMIT - SETTLEMENT ROD DETAIL (TR-0152)..... E-16

ENCROACHMENT PERMIT - SURVEY GRID (TR-0151) E-17

ENCROACHMENT PERMIT - TRENCH DETAIL (TR-0153)..... E-18

GUIDELINESS FOR THE PLACEMENT OF NEWSPAPER VENDING MACHINES IN SAFETY ROADSIDE REST AREAS E-20

JOINT OPERATIONAL POLICY STATEMENT - SPECIAL EVENTS ON CONVENTIONAL HIGHWAY RIGHTS-OF-WAY E-25

PROFESSIONAL ENGINEERS ACT (EXCERPTS FROM THE BUSINESS AND PROFESSIONS CODE)..... E-30

INCLUSION OF EXPIRATION DATE ON ENGINEERING AND LAND SURVEYING DOCUMENTS MEMO..... E-31

GUIDELINES FOR KIOSK ADVERTISING/DISPLAYS IN SAFETY ROADSIDE REST AREAS E-32

GUIDELINES FOR SUBMITTING TRANSPORTATION INFORMATION FROM A REPORTING OR MONITORING PROGRAM TO THE CALIFORNIA DEPARTMENT OF TRANSPORTATION..... E-36

GUIDELINES FOR THE PLACEMENT OF TRAVELER DISCOUNT BOOKLETS IN SAFETY ROADSIDE REST AREAS E-44

GUIDELINES AND SPECIFICATIONS FOR TRENCHLESS TECHNOLOGY PROJECTS E-51

© 2018 California Department of Transportation. All Rights Reserved.

GUIDELINES FOR TRAFFIC SIGNAL CONTROLLERS AND INSPECTION

Privately funded projects without a Cooperative Agreement - Project proponent pays costs for Department furnished controller assembly.

These costs are updated annually, if necessary, after determining the average actual cost for the Department to acquire, test, stock and ship the equipment to the local District. For additional equipment and their associated costs, please see the attached price list.

These costs should be included in the deposit prior to the issuance of the contractor's encroachment permit. In cases where there is a long lead-time before starting work, these costs may be submitted immediately prior to performing work on a signal system.

Districts should determine and charge additional fees covering the actual cost to deliver, install, inspect, and turn on traffic signal controllers.

Projects involving Cooperative Agreements - Project proponent pays costs for Department furnished controller assembly

The traffic signal controllers, and all other actual costs incurred by Caltrans, are charged against the appropriate Cooperative Agreement Expenditure Authorization. When there is Department participation in the project, the Department's share of the actual costs of the project will be reduced by the actual cost of the controllers, which include controller fee, testing costs and any other mandatory charges.

Procedures to order controller assemblies from the Department’s warehouse

To allow time for delivery to the District, controller assemblies shall be ordered from the Sacramento warehouse a minimum of 10 working days before a permittee plans to pick up an assembly in the district (controller not included). Caltrans Maintenance or Traffic staff will deliver actual controllers and auxiliary equipment to job sites at the time of a scheduled signal turn on.

Charges for Encroachment Permit projects

As each controller assembly is ordered, the districts shall instruct the Caltrans warehouse in Sacramento to charge the equipment to the Encroachment Permit Expenditure Authorization (EA) 937700, using Subjob 3EPIC and Object Code 118. A Special Designation (SD) of 7CONTROL must also be used if the permittee has paid a fee for the equipment.

Charges for Cooperative Agreement projects

For Cooperative Agreement projects, the district should instruct the warehouse to charge the equipment to the appropriate Cooperative Agreement EA, with any applicable SD identified for the project (do not use an Encroachment Permit EA or SD on these Cooperative Agreement Project

© 2018 California Department of Transportation. All Rights Reserved.

FEES FOR TRAFFIC SIGNAL CONTROLLERS AND INSPECTION

TYPE OF PROJECT	PROJECT FEE PAYMENTS		
	CONTROLLER	INSPECTION	DELIVERY AND INSTALLATION
PRIVATELY FUNDED	YES	YES	YES
LOCALLY FUNDED W/O AGREEMENT	YES (Paid by Contractor)	YES (Paid by Contractor)	YES (Paid by Contractor)
JOINT FUNDED PROJECTS WITH COOPERATIVE AGREEMENTS	YES (As part of Department's Contribution and Charged to Coop EA)	YES (As part of Department's Contribution and Charged to Coop EA)	YES (As part of Department's Contribution and Charged to Coop EA)
100% SPECIAL FUNDED PROJECTS WITH AGREEMENTS	YES (Charged to Coop EA)	YES (Charged to Coop EA)	YES (Charged to Coop EA)

© 2018 California Department of Transportation. All Rights Reserved.

Deputy Directive

Number: DD-23-R2

Refer to Director's Policy:
DP-03, Safety and Health
DP-06, Caltrans' Partnerships
DP-07, Project Delivery
DP-08, Transportation System Management and Operations (TSMO)
DP-10, Departmental Commitments
DP-14, Quality in Caltrans
DP-33, Sustainability

Effective Date: 12/04/2018

Supersedes: DD-23 R1 (2/23/2007)

Responsible Program: Project Delivery, Division of Design

TITLE Roles and Responsibilities for Development of Projects on the State Highway System

POLICY

The California Department of Transportation (Caltrans), as owner/operator of the State Highway System (SHS), has the statutory (Government Code section 14000(c)) and inherent goal to ensure that all modifications or additions to the SHS are:

- Safe, operational, maintainable, environmentally compatible, and of good value.
- Efficient in providing multimodal movement of people and goods.
- In the best interest of the general public.
- Developed and constructed in compliance with laws and regulations that govern the use of state and federal transportation funds.
- Developed and constructed in partnership with vested stakeholders.

Caltrans meets this goal by:

- Applying quality management practices.
- Engaging in early and continuous partnerships and ensuring accountability amongst project sponsors, implementing agencies, stakeholders, Caltrans functional units, local, regional, and transit agencies, tribal governments, developers and consulting firms employed by Caltrans or its partners.
- Ensuring that all projects on or proposed for the SHS are planned, developed, and constructed efficiently and effectively resulting in a quality project in accordance with Caltrans standards and practices.

© 2018 California Department of Transportation. All Rights Reserved.

- Ensure one implementing agency undertakes the project's advertising, awarding, and administration of a construction contract.
- Maintaining ultimate approval authority for all projects on the SHS.
- Keeping the public informed through appropriate outreach.

DEFINITION/BACKGROUND

The roles and responsibilities in planning, designing, and constructing transportation projects on the SHS continue to increase in complexity due to the influx of various transportation funding sources, the ability to use alternative project delivery methods, regional transportation planning agencies' active roles in selecting and programming transportation projects, and these agencies' ability to contract with private architectural and engineering firms to deliver those projects. Caltrans as steward of the SHS strives to ensure the appropriate accountability and professional liability remain with project sponsors, implementing agencies, and product suppliers. Caltrans seeks to ensure the integrity of the SHS by defining the various roles and responsibilities of all parties involved, and by ensuring the quality of transportation projects. The definitions provided below are recognition of the parties' interests related to transportation project development.

Owner/Operator is the entity ultimately responsible for the planning, design, construction, operation, maintenance, and liability of a facility. Government Code section 14520.3 (b) and Streets and Highways Code section 90 establishes Caltrans as the owner/operator of the SHS.

Project is the undertaking by a project sponsor of a transportation related construction, erection, alteration, repair, or improvement to the SHS, including all work necessary to fulfill the owner/operator's requirements and commitments while satisfying all state and federal laws and regulations. (Public Contract Code section 10105).

Project Sponsor is the project advocate that acquires funding partners to ensure adequate project funding.

Project Components are prescribed in Government Code section 14529(b) and describe the resources during the life of a project in the State Transportation Improvement Program. Components are synonymous to phases which are used to indicate the progression of a project in the project development process.

Implementing Agency is an entity charged with successful completion of a project component, and assumes project management responsibilities for the component. There is only one implementing agency per component.

© 2018 California Department of Transportation. All Rights Reserved.

Supplier is the entity that provides a service or product to the implementing agency.

Delegation is the process of transferring powers, duties, obligations, or actions from one person/entity to another.

Quality Project is the result in the fulfillment of project responsibilities in the delivery of products and services that considers stakeholders' interests and fulfills Caltrans' requirements and outcomes.

Quality Control (QC) is the methods, means, or procedures used by a supplier to monitor and assess products or services to ensure that the final product will fulfill the established quality requirements.

Quality Assurance (QA) is the performance of all the planned and systematic activities that provide confidence that the product requirements will be fulfilled.

Quality Management Plan (QMP) is a document prepared by the implementing agency that describes by who, what, when, and how QC and QA activities will be performed for each project component as specified in the quality assurance program.

Quality Assurance Program (QAP) is the implementing agency's promulgated quality related policies, procedures, and guidelines necessary to ensure the work performed for each project component results in a quality project.

Quality Management Assessment (QMA) is the performance of all planned systematic activities by the owner/operator that verifies the implementing agency's QAP effectiveness and precedes the owner/operator approval.

Quality Management Practices are all the implementing agency's systematic activities used to direct, control, and coordinate the development of a quality project. These activities include the QAP and QMP implementation, the performances of QC and QA activities, and quality improvements originating from QMA, QC, or QA.

Owner/Operator Approval is a non-delegable project related decision which can only be performed by the owner/operator.

Stakeholder Approval is a project related decision which can only be performed by an external individual or organization whose duties are established by law (e.g. National Environmental Policy Act (NEPA) permitting agencies, California Environmental Quality Act (CEQA) permitting agencies, railroads, or the California Transportation Commission (CTC)).

© 2018 California Department of Transportation. All Rights Reserved.

California Environmental Quality Act Lead Agency (CEQA) (Public Resources Code section 21067) is the public agency which has the principal responsibility for carrying out or approving a project which may have a significant effect on the environment.

National Environmental Policy Act Lead Agency is the public agency which ensures federal compliance and approvals for a project.

CEQA Responsible Agency (Public Resource Code section 21069) is the public agency, other than the lead agency, that has discretionary authority over a project.

RESPONSIBILITIES

Owner/Operator:

- Performs QMA for all projects to ensure a quality project on the SHS.
- Provides owner/operator approval as needed.
- Provides written approval on risks the project sponsor is unable to mitigate or avoid.
- Fulfills the FHWA Stewardship and Oversight Agreement responsibilities.
- Fulfills NEPA lead agency role and responsibilities when assigned by FHWA.
- Fulfills CEQA lead agency role and responsibilities.
- Performs CEQA responsible agency responsibilities, when not a CEQA lead agency.

Project Sponsor:

- Secures funding for the preparation and completion of all the project components including quality management practices.
- Identifies and seeks approval for the transportation need and purpose that conforms to Caltrans Strategic Management Plan.
- Evaluates and compares project outcomes to the established project goals.
- Chooses an implementing agency for each project component.
- Mitigates project risks and does not create undue risk for the owner/operator unless necessary approvals are obtained using proper procedures.
- Ensures the project management plan is implemented, including, but not limited to, the QMP and risk management plan.

CEQA Lead Agency:

- Determines the appropriate type of environmental documentation.
- Exercises its independent judgment and analysis for the adequacy and objectivity of the CEQA environmental document.
- Reviews and approves the need and purpose for the project as it relates to the environmental documentation.

© 2018 California Department of Transportation. All Rights Reserved.

- Reviews and approves a reasonable range of alternatives in relation to the environmental documentation.
- Reviews, comments, approves, and certifies the environmental documentation at appropriate stages of project development as prescribed in the Caltrans Standard Environmental Reference (SER).

NEPA Lead Agency:
Performed by the US Department of Transportation, Federal Highway Administration (FHWA) unless assigned to Caltrans.

- Reviews, comments, and approves the NEPA environmental documentation at appropriate stages of project development.
- Reviews and approves the need and purpose for the project as it relates to the environmental document.
- Ensures a reasonable range of alternatives are considered in relation to the environmental document.
- Reviews, comments, approves, and revaluates environmental documentation at each project component.
- Ensures the project sponsor complies with the project's environmental mitigation and other environmental commitments disclosed in the environmental document.

CEQA Responsible Agency:

- Ensures its concerns are met by providing early consultation to the CEQA lead agency.
- Participates in the CEQA process.
- Prepares and issues its own findings.
- Certifies its review and consideration of the CEQA lead agency's CEQA document.
- Acts on or approves the project.

Implementing Agency:

- Chooses the supplier for each project component.
- Establishes and implements QAP and generates a QMP for each component.
- Delivers quality project components on time, and within budget.
- Verifies and accepts work performed by the supplier provided appropriate documentation is obtained to allow for verification and acceptance.
- Advertises, awards, and administers the construction contract.
- Ensures that all project component closeout activities are completed in a timely manner, including, but not limited to, survey control and right of way monumentation, as-built plans, environmental commitments compliance, and right-of-way.

© 2018 California Department of Transportation. All Rights Reserved.

Deputy Director, Project Delivery:

- Ensures establishment and implementation of Caltrans policies, standards, procedures, and best practices for each project component affecting project development.
- Ensures establishment of the QAP for each project component affecting Project Delivery that includes QC, QA, QMA, and owner/operator approval activities.
- Ensures allocation of capital outlay support (COS) resources for the timely delivery of quality products and services.

Deputy Director, Maintenance and Operations:

- Ensures establishment and implementation of Caltrans policies, procedures, and best practices for maintenance and operations of SHS.
- Ensures allocation of maintenance and operations support resources for the timely delivery of products and services related to project development.
- Ensures establishment and implementation of Caltrans policies, procedures, and best practices for issuance of encroachment permits.
- Ensures allocation of maintenance and operations support resources for the timely delivery of products and services including CEQA lead agency or responsible agency.

Deputy Director, Planning and Modal Programs:

- Ensures establishment and implementation of Caltrans policies, procedures, and best practices for Transportation Planning of the SHS.
- Ensures that implementation of projects on or proposed for the SHS are consistent with all Caltrans transportation planning documents.
- Provides resources for the development of project initiation documents in the project initiation phase.
- Establishes and ensures the QAP for the project initiation phase includes QC, QA, QMA, and owner/operator approval activities.
- Ensures allocation of Transportation Planning support resources for the timely delivery of products and services including CEQA lead agency or responsible agency.

Division Chiefs:

For each Division's respective area of responsibility pertaining to the efficient and timely delivery of quality projects and services:

- Develop and implement standards, procedures, and best practices that are aligned with Caltrans' Strategic Management Plan.
- Develop and implement guidance, tools, and training to ensure successful delivery of quality projects.
- Develop a QAP pertaining to their product and services for which Caltrans is the implementing agency and responsible agency.

© 2018 California Department of Transportation. All Rights Reserved.

- Provide statewide direction, policies and standards for activities required to ensure compliance with Caltrans policies, standards, and best practices.
- Measure and monitor critical program and project deliverables and outcomes by districts and regions in alignment with Caltrans' Strategic Management Plan.
- Act as the approval authority for owner/operator approvals for those decisions delegated.
- Provide guidance, policies, tools, and training for QMA activities.
- Perform audit, surveillance, or process reviews for ensuring the consistent and effective application of Caltrans standards, procedures, best practices, and quality management activities.
- Implement a system of continuous quality improvement using information learned from measuring and monitoring deliverables and from process reviews.

District Directors:

- Assess the feasibility of the project sponsor's ability to obtain funding for the proposed project component(s) before Caltrans begins work.
- Act as the Caltrans authority for any owner/operator approval for those decisions delegated.
- Concur on the project's need and purpose relative to its public benefit and impacts to the SHS.
- Appoint a primary point of contact for each project.
- Determine and provide those activities that ensure a quality project on the SHS, including, but not limited to:
    - Implementation of the QAP for each project component for which Caltrans is the implementing agency.
    - Implementation of QMA for all project components.
- Ensure project decisions are made considering information gathered through public outreach and involvement of stakeholders.
- Enter into cooperative or highway improvement agreements as appropriate with project sponsor(s) prior to expenditure of COS resources.
- Inform stakeholders of the policies, standards, procedures, and best practices required by Caltrans and FHWA.
- Deliver on commitments made to partners and customers, based on statutory authority and available resources, and ensure the timely delivery of quality products and services for which Caltrans is the implementing agency.
- Ensure that Caltrans functional units are properly resourced to deliver quality products and services in a timely manner.
- Determine the appropriate agency to be the lead under CEQA.
- Approve and certify the CEQA environmental document if Caltrans is the CEQA lead agency or approve the project if Caltrans is the responsible agency.

© 2018 California Department of Transportation. All Rights Reserved.

- Review and approve the project report or equivalent after consideration of the CEQA.
- If assigned, approve the NEPA environmental documentation.
- Ensures all proposed projects are evaluated and prioritized for funding.

Public Information Officers:
Communicate to the public specific actions that will be taken to restore or minimize effects of all construction, maintenance, permitting, planned emergency restoration, or other activities on the SHS.

District Deputies, Office Chiefs, and Branch Chiefs:
- Provide QA for the products, and services within their functional area.
- Empower employees with the tools, resources, time, and training to deliver the products and services for which Caltrans is the implementing agency.
- Participate in the development of work plans and quality management activities defining project scope, cost, schedule, resource, and quality requirements.
- Prioritize commitments to ensure the successful delivery of both Caltrans' and external project sponsors' projects.
- Ensure that work does not begin without appropriate written authorization.
- Notify their District Director and/or Deputy District Directors, via established reporting relationship, of any changes, problems, or risks that could affect the scope, cost, schedule, and overall quality of projects on the SHS, or owner/operator approval.
- Apply the QAP, and develop the QMP if Caltrans is the implementing agency.
- Perform QMA, if assigned this responsibility.
- Assess and manage risk affecting the owner/operator responsibilities.

Project Managers:
- Lead the project development team on issues and risks related to quality management, scope management, schedule management, or cost management issues for each project component utilizing appropriate documentation.
- Facilitate resolutions and seek approvals for project related issues and risks affecting the quality, scope, schedule or cost.
- Ensure funding requirements are met.

Task Managers or Employees:
- Participate in the deployment of the QAP by performing quality control or quality assurance, if assigned, on work or services.
- Provide quality and timely products and services by using appropriate tools, resources, time, documentation, and training.

© 2018 California Department of Transportation. All Rights Reserved.

- Assess risk of issues affecting the owner/operator responsibilities and communicate those in a collaborative fashion to the implementing agency and stakeholders.
- Communicate to their supervisors, project managers, and impacted functional units any changes, problems, or risks by using proper and approved methods of documentation for the project.

APPLICABILITY

All employees involved with the delivery of modifications or additions to the SHS.

RYAN CHAMBERLAIN
Chief Deputy Director

12/4/18
Date Signed

© 2018 California Department of Transportation. All Rights Reserved.

STATE OF CALIFORNIA - DEPARTMENT OF TRANSPORTATION

ENCROACHMENT PERMIT H - SUPPORT DIAGRAM FOR AERIAL CROSSINGS

TR-0108 (REV. 03/2007)

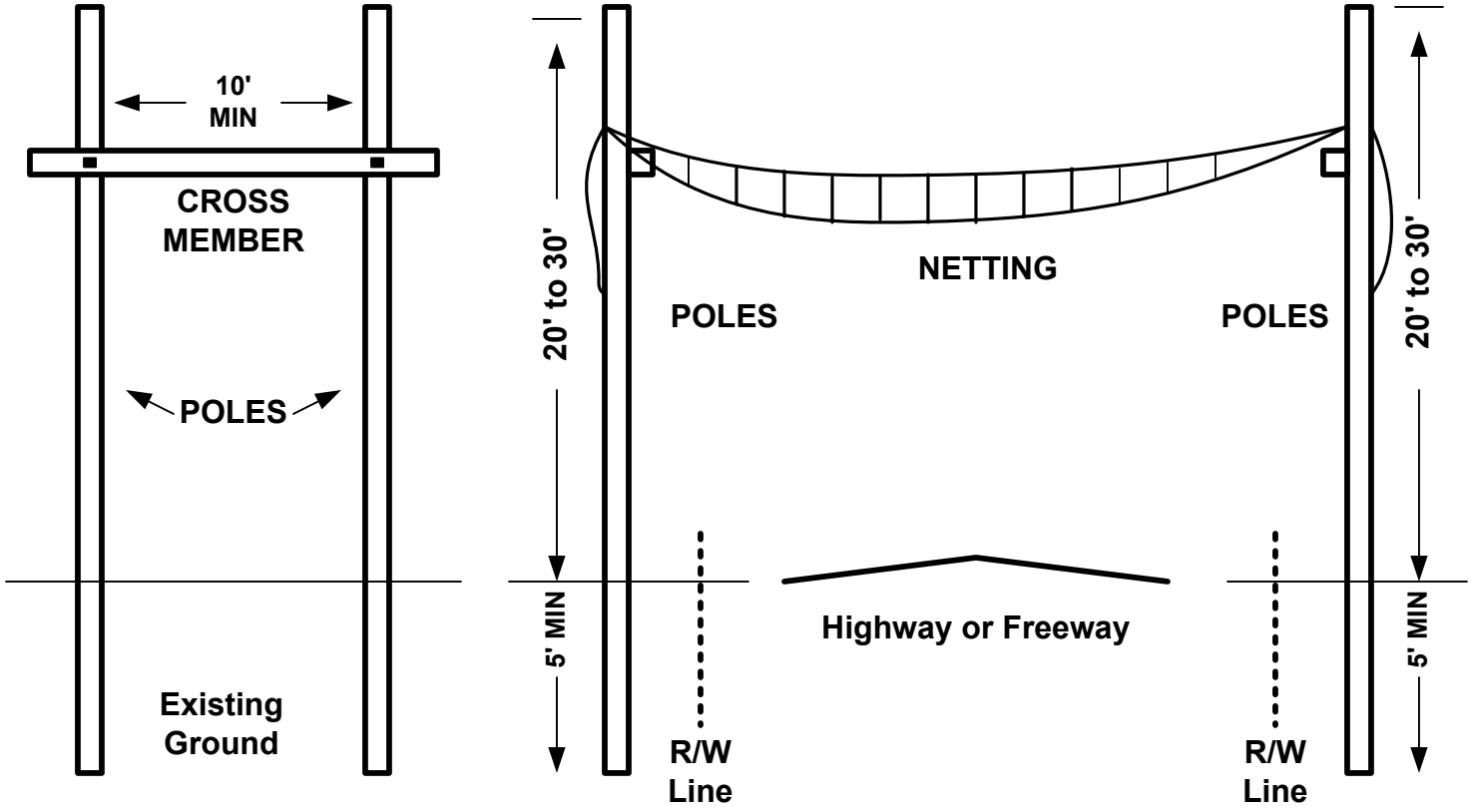

CONSTRUCTION NOTES:

A MINIMUM OF 18' SHALL BE MAINTAINED OVER AND ACROSS HIGHWAY OR FREEWAY LANES.

NETTING SHALL BE MAINTAINED OVER AND ACROSS LANES UNTIL AERIAL FACILITIES ARE PROPERLY SECURED IN PLACE.

H - SUPPORTS SHALL BE INSTALLED OUTSIDE OF STATE R/W, UNLESS PERMITTED BY THE STATE'S REPRESENTATIVE.

CHP BREAKS SHALL NOT EXCEED 5 MINUTES FOR THE PLACEMENT OF NETTING.

PLACEMENT OF AERIAL LINES: **Installation or removal of overhead conductors crossing a freeway require traffic control by the California Highway Patrol (CHP) and usually occur on weekend mornings. The CHP can perform a rolling break in traffic on most highways to allow up to a five-minute clearing. These breaks are adequate for simple cable installation. Utility personnel carry the conductors across the freeway lanes and hoist them into place on the opposite side of the freeway.**

On larger conductor crossings such as transmission lines, 1" or greater in diameter, districts may determine that safety nets are needed to prevent transmission lines from falling on traffic during cabling installations. Temporary safety-net support poles are placed at protected locations outside shoulders and in medians. If locations for temporary supports are not available, the utility company may use K-rail and sand barrel crash cushions. After rope nets are strung during CHP traffic breaks other work is then allowed to proceed. Placement of the aerial line may be by helicopter.

© 2018 California Department of Transportation. All Rights Reserved.

STATE OF CALIFORNIA - DEPARTMENT OF TRANSPORTATION

ENCROACHMENT PERMIT SETTLEMENT ROD DETAIL

TR-0152 (REV. 09/2006)

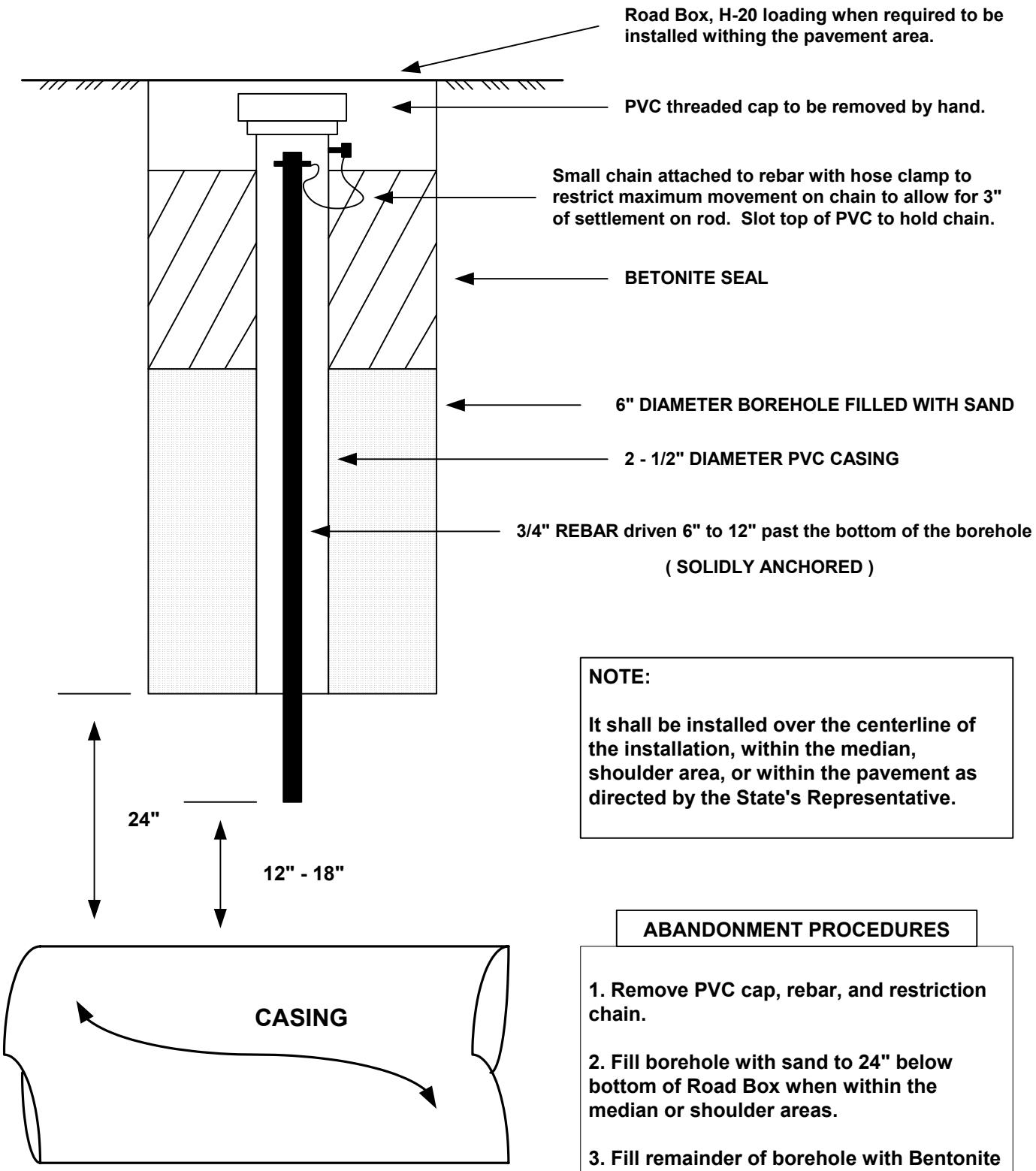

NOTE:

It shall be installed over the centerline of the installation, within the median, shoulder area, or within the pavement as directed by the State's Representative.

ABANDONMENT PROCEDURES

1. Remove PVC cap, rebar, and restriction chain.

2. Fill borehole with sand to 24" below bottom of Road Box when within the median or shoulder areas.

3. Fill remainder of borehole with Bentonite seal mixture.

4. Remove Road Box and back fill with an approved backfill.

© 2018 California Department of Transportation. All Rights Reserved.

STATE OF CALIFORNIA - DEPARTMENT OF TRANSPORTATION

ENCROACHMENT PERMIT SURVEY GRID

TR-0151 (REV. 09/2006)

LEGEND:

- ⬡ Octagon Data Points required when the diameter is < 8'.
- △ Octagon & Triangle Data Points required when the diameter is > 8'.
- ☆ Settlement Rod may be required when the diameter is > 5'. (Settlement Rod Detail is located in Appendix E of the Encroachment Permits Manual)

EP	Edge of Pavement
ETW	Edge of Travel Way (Fog line, Yellow Stripe, etc.)
S	Offset Distance away from the pipe alignment, as follows:
3'	for casing pipe diameters < 30"
5'	for casing pipe diameters 30" - 72"
10'	for casing pipe diameters 72" - 108"
15'	for casing pipe diameters > 108"

NOTES:

Survey data is to be collected at the specific points along the casing alignment at the following times:

1. Prior to Start of Work.
2. Every two (2) hours continuously throughout the project.
3. Upon completion of the project.
4. Every two (2) months, during a six month period after the date of completion, and or As Required by the Department.

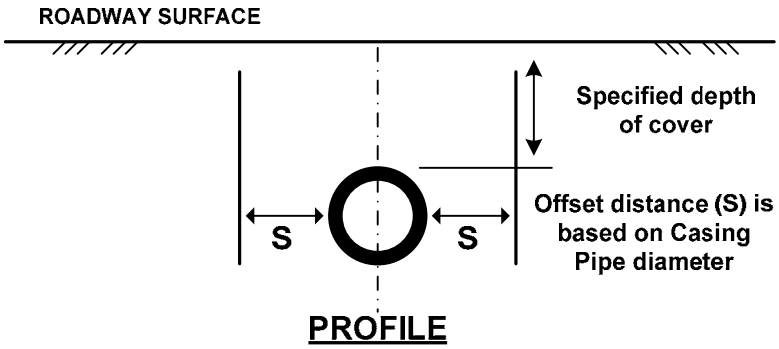

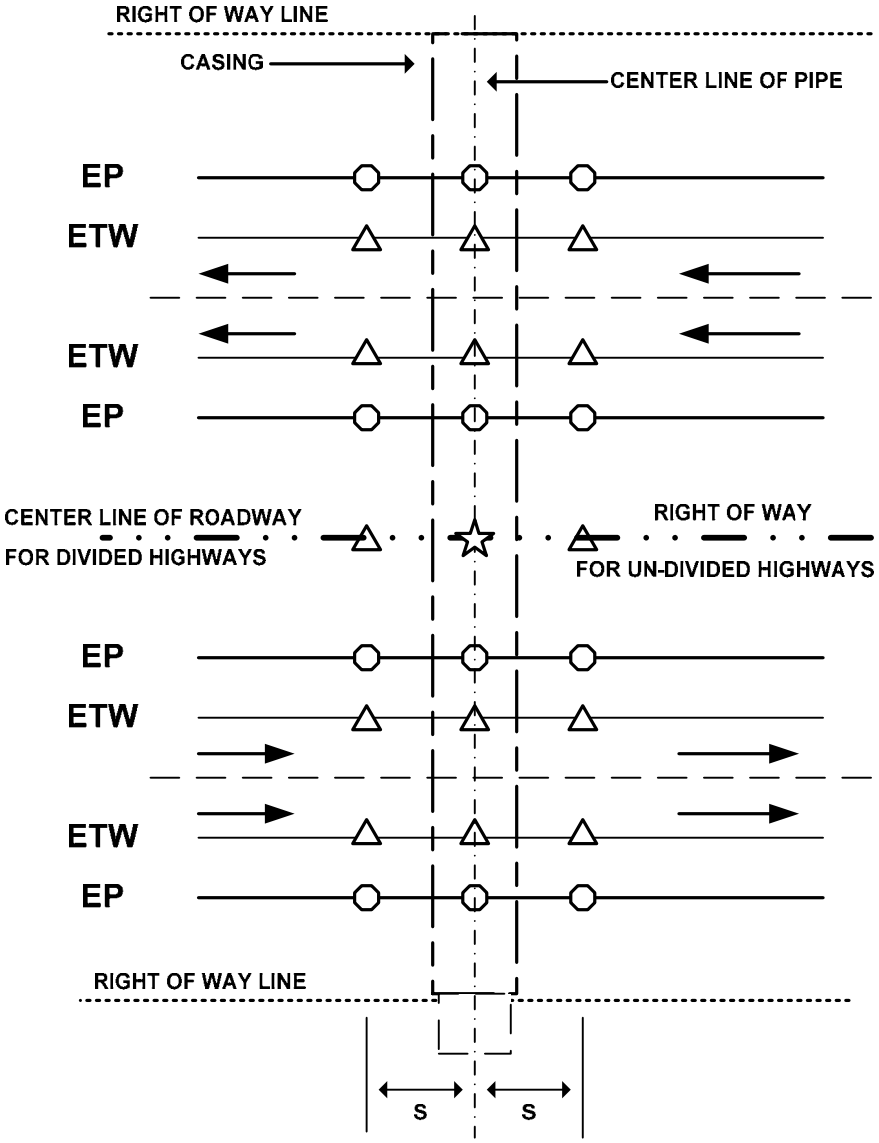

© 2018 California Department of Transportation. All Rights Reserved.

TYPICAL TRENCH DETAIL (NOT TO SCALE)

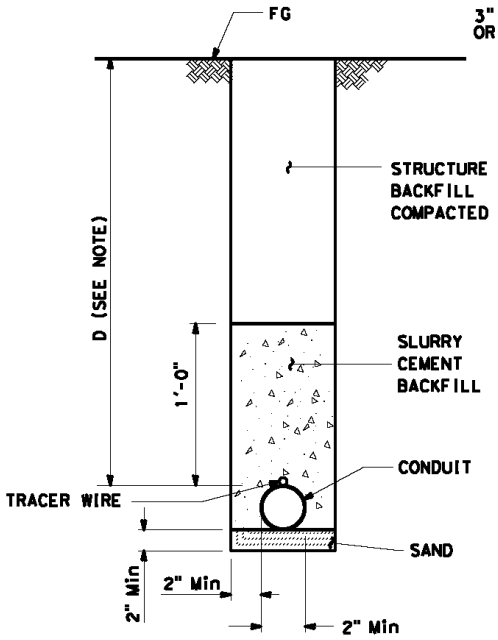

TRENCH IN SOIL

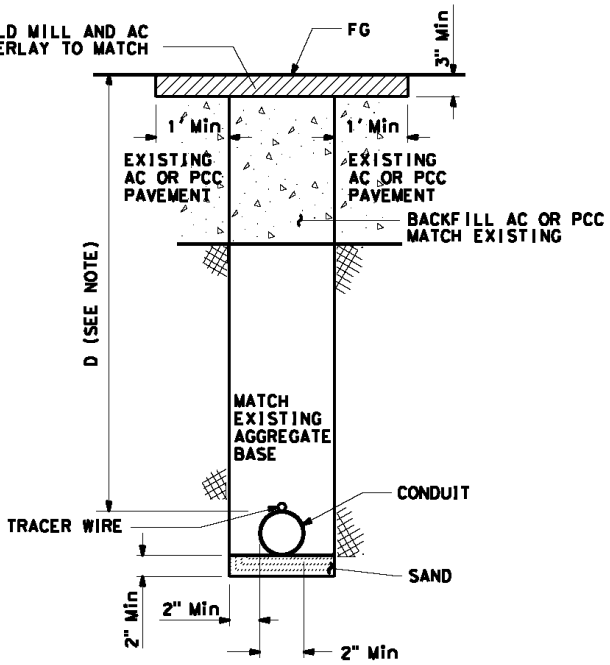

TRENCH IN PAVEMENT (PCC OR ASPHALT)

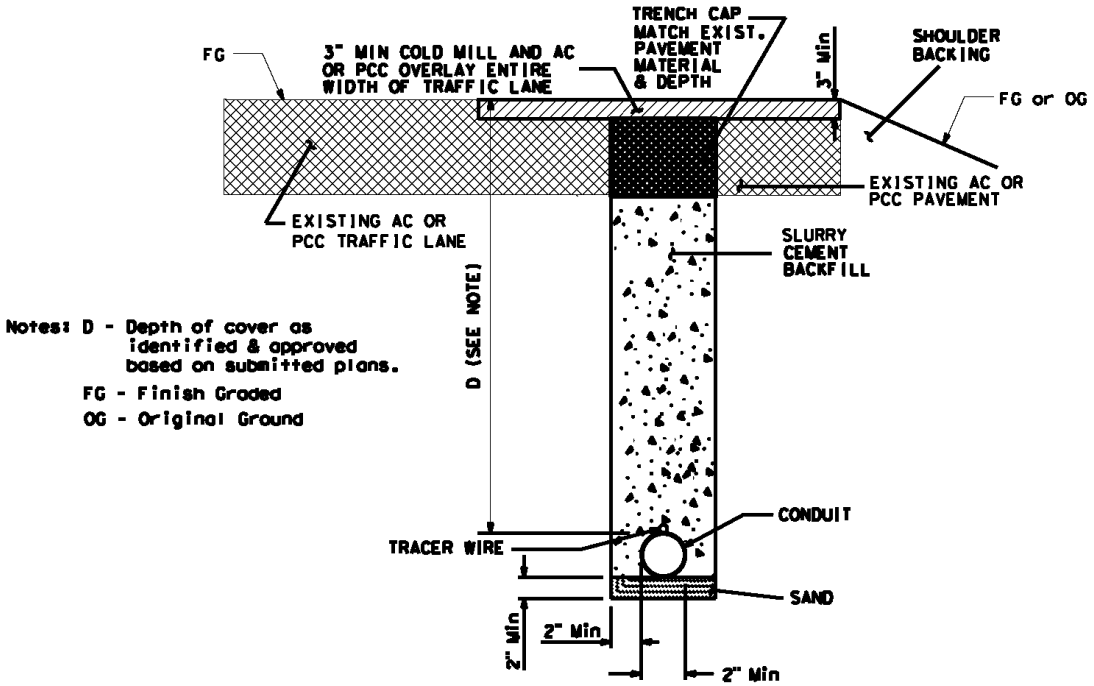

LONGITUDINAL TRENCH IN PAVEMENT (PCC OR ASPHALT)

See page 2 for additional notes.

- **All work must be authorized by the encroachment permit, and/or as directed by the State's representative.**
- **A tracer wire must be placed on top of the conduit unless specified not to.**
- **Clearance between the trench wall and encroachment work less than 6 inches in width shall be a minimum of 2 inches. Clearance between the trench wall and encroachment work greater than 6 inches width shall be a minimum of 6 inches.**
- **When the trench width is less than 2' the backfill for subgrade must consist of either slurry cement or Controlled Low-Strength Material (CLSM).**
- **When trench width is greater than 2' compacted aggregate base may be used for backfill.**
- **Structure backfill must conform to Section 19-3.02C of the Standard Specifications.**
- **For trench located under unimproved surface, structure backfill can use the original soil. Soil must be compacted by mechanical means. Ponding, jetting or flooding are not allowed. Slurry cement backfill is optional at the discretion of the Caltrans District.**
- **Slurry cement backfill must conform to Section 19-3.02E of the Standard Specifications.**
- **Aggregate base shall conform to Section 26 of the Standard Specifications.**
- **CLSM must conform to Section 19-3.02G of the Standard Specifications. When CLSM is utilized the mix design and test results must be submitted to the State's representative. See Appendix H of the Encroachment Permits Manual for additional information.**
- **Cold planed surface and overlay shall be to the nearest lane line for the entire length of the trench/disturbed areas, and/or as directed by the State's representative.**
- **A paving notch ("T" Cut) shall be cold planed in exist asphalt concrete to a minimum width of 1.0' beyond each side of the trench and to a depth of 3" for the final layer of HMA.**
- **HMA or PCC to replace pavement section shall match existing pavement depth, unless directed otherwise by the State's representative.**
- **Hot mix asphalt must conform to Section 39 of the Standard Specifications.**
- **A tack coat of asphaltic emulsion conforming to Section 39-2.01C (3) (f) shall be applied.**
- **When the trench is within 4' of curb and gutter, additional cold planing may be required at the discretion of the State's representative.**
- **Pavement markings and/or striping removed or damaged during construction must be replaced as directed by the State's representative.**
- **Other trench related details are shown in Chapter 6 of the Encroachment Permits Manual as well as the Trenching and Shoring Manual. Both publications can be found on the State of California, Department of Transportation's website.**

NEWSPAPER

DISTRIBUTION

GUIDELINES

For

Safety Roadside Rest Areas

HEADQUARTERS
OFFICE OF ENCROACHMENT PERMITS
&
HEADQUARTERS LANDSCAPE ARCHITECTURE PROGRAM

MAY 2009

© 2018 California Department of Transportation. All Rights Reserved.

NEWSPAPER DISTRIBUTION GUIDELINES
SPECIAL PROVISIONS & PERMIT CONDITIONS

APPLICATION SUBMITTAL

Streets and Highway Codes Section 220.5 authorizes the placement of Newspaper Vending Machines, herein after referred to as "distribution boxes," at Safety Roadside Rest Areas (SRRA).

- Section 220.5 (c) authorizes the Department the rights of determination in which SRRA are suitable for placement of these facilities.
- Section 220.5 (d) authorizes the Department the right to determine a suitable fee.

Newspaper distribution boxes at Safety Roadside Rest Areas (SRRA) and Vista Points are permissible when a Newspaper Entity has entered into a "Newspaper Distribution Agreement," hereinafter referred to as "Agreement", through the District Landscape Architect.

The District Landscape Architect is responsible for all reviews, field studies, and document preparation before sending the completed package, consisting of the Agreement, the required fee/deposit and a completed Encroachment Permit Application to the District Encroachment Permits Office for permit issuance.

The Department retains all rights in determining whether or not the placement of Newspapers and distribution boxes will be allowed within any SRRA and/or Vista Point. When the Department grants permission to allow placement of these facilities, they shall be limited to a total of four units per SRRA location. A copy of the agreement, permit and guidelines shall be provided to the requestor, and a copy forwarded to Headquarters Landscape Architecture Program.

FEE / DEPOSIT

A check in the amount of four (4) hours of the encroachment standard hourly rate shall be submitted with the package to the District Permits Office. This deposit/fee will cover processing of the application, review, issuance of the permit and inspection. All permits issued for the placement of a Newspaper within a SRRA shall be issued for a period of one year.

The permittee is responsible for all actual costs of the permitting process. When there are issues of non-conformance that could result in additional time expenditures the permittee shall be required to compensate re-imbursement of that time expended.

SPECIAL PROVISIONS & CONDITIONS

Subcontracting under this permit will not be allowed for the placement of the newspapers.

The permittee is required to provide weekly maintenance checks on their distribution facility, to ensure cleanliness of the area surrounding their facility.

Storage of newspapers on State rights-of-way will not be allowed.

A copy of the newspaper is the only item that will be allowed in the window of the door on the distribution box.

The permittee is required to notify the District Landscape Architect prior to start of any work in the States' right-of-way, to include performing weekly inspections.

© 2018 California Department of Transportation. All Rights Reserved.

Vehicles shall be parked in the parking lot when filling or re-filling of the distribution boxes.

Any three violations of the special provisions or permit conditions within the term of the permit will result in revocation of your permitted privileges.

INSTALLATIONS & CONDITIONS

All new installations of distribution facilities shall be installed and maintained by the permittee under the direction of the District Landscape Architect and shall be in compliance with the following criteria:

Within each Safety Roadside Rest Area (SRRA), all distribution facilities (boxes and pedestals) shall all be of the same type, model, manufacturer and color (see Attachment #1 & #2) so that a uniform appearance is maintained as directed by the District Landscape Architect and per the attachments provided.

The distribution facilities shall be located within the SRRA as directed by the District Landscape Architect, in the planted areas wherever practicable, adjacent to walkways and electroliers to reduce the exposure to vandalism and theft.

The distribution facility should be located in an area where it will be unobtrusive and not detract from other elements of the SRRA. It will be located so that it is convenient and easily accessible to the traveling public.

The front of the distribution facility should be parallel with the edge of the walkway.

The distribution boxes are to be securely fastened to square steel pedestal mounts, which are to be set in a concrete footing located within the planted area. The top of the concrete footing is to be covered with soil, mulch or ground cover to restore the area to its previous appearance to as great an extent as possible. Distribution boxes furnished with a pedestal mount equipped with a steel flange base designed to be bolted to concrete surfaces are to used only where directed by the District Landscape Architect.

All distribution facilities shall be free of any advertisements and shall be maintained in a clean, neat and attractive condition and in good repair at all times. Any facilities (boxes, pedestals) that are damaged, in a state of disrepair, or due to wear and tear which are no longer in a presentable condition (clean, neat and attractive) shall be replaced or repaired by the permittee within (48) hours after discovery or notification by the States' representative to do so.

All distribution facilities which have been lost, stolen or vandalized and facilities that are no longer to be used, shall be removed, replaced or repaired by the permittee within (48) hours after discovery or notification by the District Landscape Architect to do so.

Any distribution facility that is missing, vandalized or unused and is not to be replaced shall be removed, and the site shall be returned to its original condition.

THESE GUIDELINES ARE SUBJECT TO CHANGE AT THE DISCRETION OF THE HEADQUARTERS OFFICE OF ENCROACHMENT PERMITS. IT IS THE RESPONSIBILITY OF THE PERMITTEE TO REMAIN CURRENT WITH THE SPECIAL PROVISIONS AND PERMIT CONDITIONS OF THESE GUIDELINES.

© 2018 California Department of Transportation. All Rights Reserved.

ATTACHMENT #1

DISTRIBUTION BOXES

FACE VIEW

BEIGE COLOR

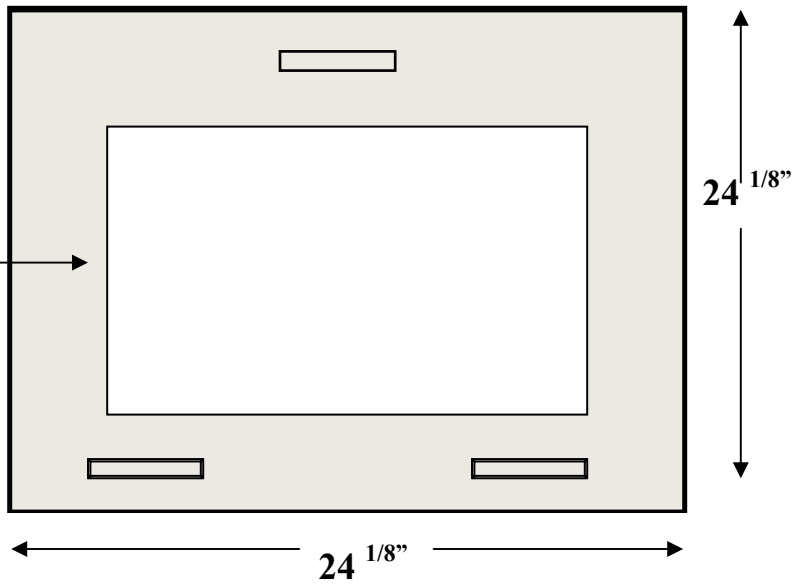

SIDE VIEW

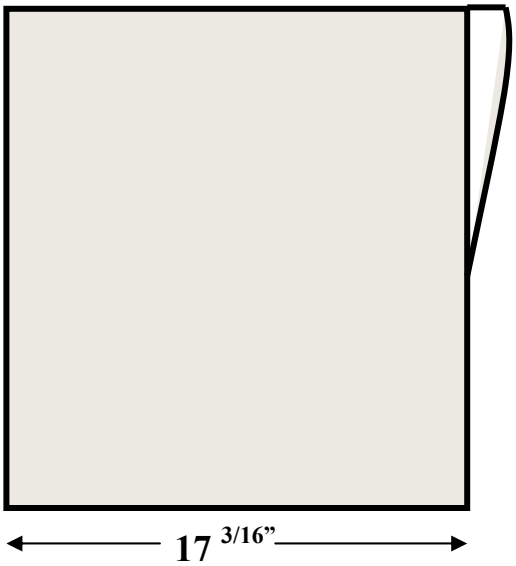

DOUBLE BOX DIAGRAM

TOP VIEW
Of
BASE TRAY

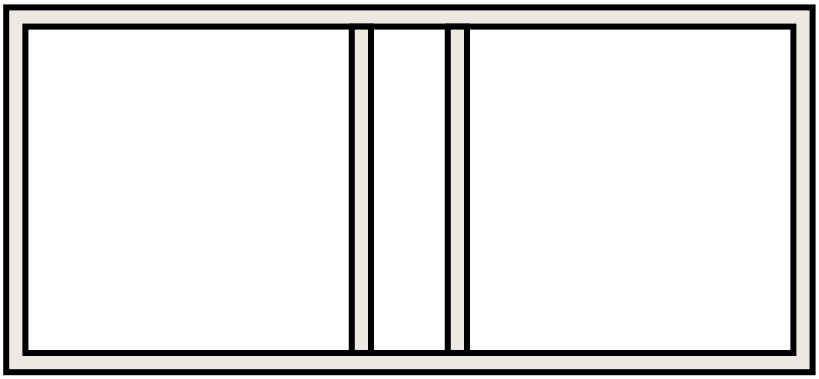

© 2018 California Department of Transportation. All Rights Reserved.

ATTACHMENT #2

PEDESTAL

SINGLE BOX DIAGRAM

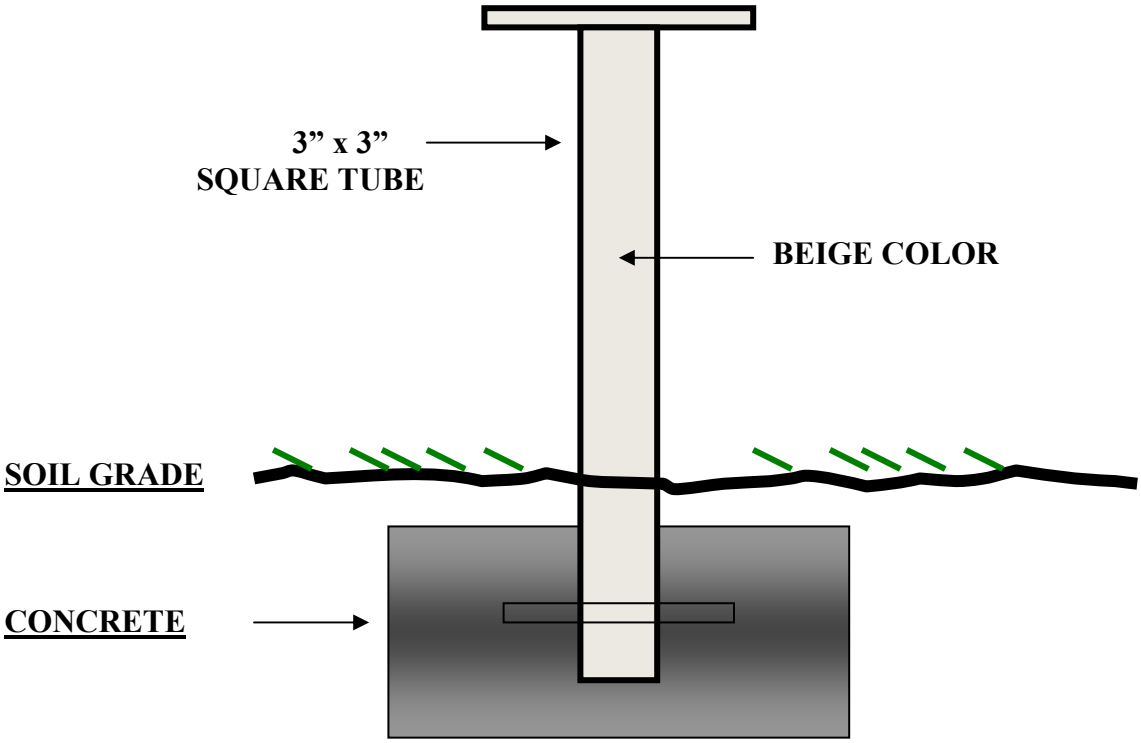

The distribution boxes are to be securely fastened to square steel pedestal mounts, which are to be set in a concrete footing located within the planted area. The top of the concrete footing is to be covered with soil, mulch or ground cover to restore the area to its previous appearance to as great an extent as possible. Distribution boxes furnished with a pedestal mount and equipped with a steel flange base that are designed to be bolted to concrete surfaces are to be used only where directed by the Department.

© 2018 California Department of Transportation. All Rights Reserved.

STATE OF CALIFORNIA • DEPARTMENT OF TRANSPORTATION

NEWSPAPER DISTRIBUTION AGREEMENT

TR-0150 (NEW 05/2009)

The undersigned newspaper distributor, hereinafter referred to as DISTRIBUTOR, desires to place and maintain **a newspaper** and newspaper vending machine, hereinafter referred to as "Machine", at certain identified safety roadside rest areas owned and operated by the State of California, Department of Transportation, hereinafter referred to as STATE. DISTRIBUTOR agrees that the following conditions apply:

1. DISTRIBUTOR shall comply with the applicable provisions of the California Administrative Code and directions from the State's representative as to the location and placement of each Machine and including its associated pedestal.

2. DISTRIBUTOR shall indemnify, protect and hold harmless the STATE, its officers and employees from all claims for injury to persons or damage to property by reason of the presence, location and/or maintenance of the Machine on STATE property, or by reason of claims based on acts of DISTRIBUTOR'S agents, employees or workers.

3. Maintenance of the Machine shall be the sole responsibility of DISTRIBUTOR, including any replacement or repair of Machine stolen or damaged by vandalism. DISTRIBUTOR shall begin to make necessary repairs within 48 hours after receipt of written or oral notification by STATE.

4. In the course of servicing a Machine, DISTRIBUTOR shall not deposit in or about any safety roadside rest area any wrapping paper, tying material or other litter, except to dispose of such material in a receptacle intended for that purpose. Any material that cannot be disposed of in available receptacles shall be immediately removed from the premises by DISTRIBUTOR.

5. If distribution of the newspaper is discontinued for thirty consecutive days, the DISTRIBUTOR shall remove the Machine and restore the site to its original condition.

6. If the Machine to be removed is on a pedestal shared with other machines, the DISTRIBUTOR shall modify the pedestal to properly accommodate the remaining machines.

7. If, after such discontinuance, or if the terms of this Agreement are violated, and DISTRIBUTOR fails to remove the Machine and restore the site within ten days after reasonable notice and demand, the STATE may thereafter remove the Machine and restore the site to its original condition and the DISTRIBUTOR agrees to reimburse the STATE for the reasonable costs of that removal and restoration.

8. The STATE reserves the right to close, temporarily or permanently, the safety roadside rest area for any reason without notification to the DISTRIBUTOR.

9. This Agreement shall commence on _____ 20___, and shall terminate on _____ 20___

The parties agree that only the following newspaper may be distributed:

NAME OF REST AREA(S)	TRAVEL DIRECTION	NEWSPAPER NAME

COMPANY NAME	CONTACT PERSON	PHONE NUMBER
ADDRESS		E-MAIL ADDRESS
DISTRIBUTOR'S SIGNATURE ▶		

DISTRICT USE ONLY

DISTRICT SRRA COORDINATOR / DISTRICT LANDSCAPE ARCHITECT NAME	PHONE NUMBER
DISTRICT SRRA COORDINATOR / DISTRICT LANDSCAPE ARCHITECT NAME ▶	E-MAIL ADDRESS

© 2018 California Department of Transportation. All Rights Reserved.

DEPARTMENT OF TRANSPORTATION

AND

CALIFORNIA HIGHWAY PATROL

Joint Operational Policy Statements

PLANNED LANE CLOSURES

GENERAL

The California Department of Transportation (Caltrans) and the California Highway Patrol (CHP) share responsibility for operating the state highway system safely and efficiently. Because of the shared responsibilities, planned lane closures impact both Caltrans and CHP. Minimizing motorist delay while maintaining the quality of work and public and worker safety are key goals during planned lane closures.

PLANNED LANE CLOSURE POLICY

Transportation Management Plans (TMPs), including contingency plans, are required for all construction, maintenance, encroachment permit, planned emergency restoration, or other planned activities. TMPs define the actions necessary to ensure a safe workzone that minimizes impacts to motorists. Caltrans District offices will seek input from local CHP personnel for the development of significant TMPs.

When planned lane closures are necessary, some of the techniques or considerations when developing a TMP may include:

1. Consideration of lane closure hour restriction.
2. Use of Construction/Maintenance Zone Enhanced Enforcement Program (COZEEP/MAZEEP).
3. Use of Freeway Service Patrol for workzone.
4. Consideration of predictable heavy congestion, such as commute hours and holidays.
5. Detour routes.
6. Reduced lane widths.
7. Consideration of impact on adjacent roads.

Decisions on how to handle public safety situations should be made collaboratively between Caltrans and CHP at pre-job meetings and/or when they

© 2018 California Department of Transportation. All Rights Reserved.

occur. More information on termination of lane closures is contained under Joint Responsibilities.

A. JOINT RESPONSIBILITIES

1. Lane Closure Review Committees. When a planned lane closure-related traffic delay is expected to exceed 30 minutes, a Caltrans District Lane Closure Review Committee (DLCRC) review and approval is required. The DLCRC will include a local designated CHP representative. The DLCRC decides when to submit lane closure requests that are of an interregional, statewide, environmental, or otherwise of a sensitive nature to the Caltrans headquarters Lane Closure Review Committee (HLCRC) for their approval. The HLCRC includes a designated CHP headquarters representative.

2. Contingency Plans. Contingency plans will be developed to address construction process problems, and those for unexpected traffic issues. A contingency plan addresses specific actions that will be taken to restore or minimize effects on traffic when traffic congestion or delay exceeds the original estimates. The contingency plans will prescribe actions for likely problems and provide the criteria "triggers" for initiating the planned actions. The CHP and Caltrans will collaborate in the development of contingency plans and will:

a. Commit personnel and resources, as available, to ensure the efficient execution of the plan.

b. Ensure the plan provides that clearly designated responsible personnel, with the authority to act, will be available at all times during closure.

c. Coordinate and collaborate with other commands and agencies as required.

d. Ensure local authorities and allied agencies as appropriate are participants in the plan and are willing to act.

e. Ensure the TMCs are part of the plan, including interregional TMC participation.

3. Termination of Highway Lane Closures. Either department may terminate a lane closure because of safety concerns (e.g., unacceptable smoke or dust that restricts motorist visibility, development of inclement weather, potential for flooding). Whenever possible, a closure should be terminated collaboratively between Caltrans and the CHP.

When a CHP field representative determines a lane closure should be terminated

© 2018 California Department of Transportation. All Rights Reserved.

because of safety concerns or unacceptable traffic congestion, the following protocol should be used:

a. Notify a CHP supervisor.

b. Contact the Caltrans person responsible for overseeing field work. If mutual agreement to terminate the closure is not reached, the CHP supervisor should notify the Area commander or designee, who will contact the appropriate Caltrans manager to mutually resolve the issue. If the decision is made to terminate the closure, the CHP and Caltrans representatives shall:

1. Advise the TMC or Caltrans Maintenance Dispatch as appropriate.

2. Notify all other applicable entities (e.g., highway contractor).

When a Caltrans field representative or District Traffic Manager (DTM) determines a lane closure should be terminated because of safety concerns or unacceptable traffic congestion on the immediate and/or adjacent highway/roadway system, the following protocol should be used:

a. Notify the Caltrans person responsible for overseeing field work, Maintenance Dispatch, CHP Communication Center, and TMC.

b. Notify all other applicable entities (e.g., highway contractor).

4. Evaluation. For some major TMPs, it is expected that evaluations will be done as a joint CHP/Caltrans activity, and include any other participants such as allied agencies.

B. CHP'S RESPONSIBILITIES

CHP Division and Area commanders, or their designees, will collaborate and cooperate with responsible Caltrans personnel to minimize traffic congestion (e.g., vehicle queuing, stopping, slow bumper-to-bumper vehicles) resulting from planned lane closures. CHP Division and Area commanders will work with the appropriate Caltrans District Division Chief, DTM, Resident Engineer, Maintenance Region Manager, or person(s) designated by the District Director to ensure the CHP's concerns are adequately addressed in the TMPs and contingency plans.

Area commanders or their designees participating on, and/or reviewing and commenting on project-specific TMPs and contingency plans will:

© 2018 California Department of Transportation. All Rights Reserved.

1. Review the plans in a timely manner to ensure CHP concerns, including motorist and worker safety, are adequately addressed.

2. Provide notification to appropriate CHP commands of all impending planned lane closures and status of associated TMPs.

3. Notify respective CHP Division commanders of agreed upon traffic queues (distance and amount of time for stop-and-go vehicles) during the lane closures and any significant issues concerning traffic control that were not resolved in the TMP.

4. Verify that TMCs have been notified and are part of impending projects, TMPs, and contingency plans.

5. Ensure the commitment of CHP personnel and resources to COZEEP/MAZEEP, directing traffic, and traffic monitoring is clearly and accurately described in TMPs and contingency plans.

C. CALTRANS' RESPONSIBILITIES

The Caltrans TMP Coordinator will confer with the respective CHP Area commanders to determine criteria and procedures for notification of planned highway lane closures and changes to TMPs.

Depending on the project and impact on traffic, Caltrans may include CHP in the development and review of TMPs.

1. Caltrans should designate a responsible representative for each lane closure.

2. Caltrans should ensure the contractor is able and prepared to comply with the TMP and contingency plan as they relate to its performance of work.

D. SPECIAL EVENTS ON STATE HIGHWAYS

Special events include, but are not limited to, activities such as parades, marathons, bikeathons, walkathons, marches, triathlons, and other activities. Filming operations are covered under separate guidelines.

An encroachment permit for special events is required whenever any activity is conducted within a state highway right-of-way which interferes with the unrestricted movement of traffic, requires special traffic control, and/or cannot be conducted in such a manner as to fall under the permissible uses of a highway as authorized in the California Vehicle Code (CVC). Activities which do not

© 2018 California Department of Transportation. All Rights Reserved.

interfere with traffic and which conform to the CVC do not require a permit.

Preliminary and operational meetings should be held with Caltrans, CHP, and special event representatives for all proposed special events before a permit is issued. When appropriate, other local authorities and law enforcement agencies should be invited to attend the meetings. The purpose of these meetings is to define permit conditions, which generally include:

1. Highway location feasibility.
2. Traffic control and facility needs.
3. CHP and Caltrans personnel required for event.
4. Timing of event.
5. Preventing damage to state property.
6. Safety considerations, which includes preventing traffic hazards and determining the least amount of impact to traffic.

Operational decisions and/or emergency situations may require the roadway to be reopened immediately. This decision should be made by the state representative in charge (Caltrans or CHP). CHP and Caltrans may bill the permit-holder for all costs incurred.

WILL KEMPTON, Director
Department of Transportation

12/29/05
Date

M. L. BROWN, Commissioner
Department of California
Highway Patrol

Date

© 2018 California Department of Transportation. All Rights Reserved.

6735. Preparation, signing, and sealing of civil engineering documents
(a) All civil (including structural and geotechnical) engineering plans, calculations, specifications, and reports (hereinafter referred to as "documents") shall be prepared by, or under the responsible charge of, a licensed civil engineer and shall include his or her name and license number. Interim documents shall include a notation as to the intended purpose of the document, such as "preliminary," "not for construction," "for plan check only," or "for review only." All civil engineering plans and specifications that are permitted or that are to be released for construction shall bear the signature and seal or stamp of the licensee and the date of signing and sealing or stamping. All final civil engineering calculations and reports shall bear the signature and seal or stamp of the licensee, and the date of signing and sealing or stamping. If civil engineering plans are required to be signed and sealed or stamped and have multiple sheets, the signature, seal or stamp, and date of signing and sealing or stamping, shall appear on each sheet of the plans. If civil engineering specifications, calculations, and reports are required to be signed and sealed or stamped and have multiple pages, the signature, seal or stamp, and date of signing and sealing or stamping shall appear at a minimum on the title sheet, cover sheet, or signature sheet.

6746. Exemption - communications companies under the Public Utilities Commission
Plans, specifications, reports and documents relating to communication lines and equipment prepared by employees of communications companies which come under the jurisdiction of the Public Utilities Commission, and by employees of contractors while engaged in work on communication equipment for communications companies which come under the jurisdiction of the Public Utilities Commission, are not subject to the provisions of this chapter.

6746.1. Exemption - employees of the communications industry
The provisions of this act pertaining to licensure of professional engineers other than civil engineers, do not apply to employees in the communication industry, nor to the employees of contractors while engaged in work on communication equipment. However, those employees may not use any of the titles listed in Section 6732, 6736, and 6736.1, unless licensed.

6747. Exemption – industrial corporations and public utilities
(a) This chapter, except for those provisions that apply to civil engineers and civil engineering, shall not apply to the performance of engineering work by a manufacturing, mining, public utility, research and development, or other industrial corporation, or by employees of that corporation, provided that work is in connection with, or incidental to, the products, systems, or services of that corporation or its affiliates.
(b) For purposes of this section, “employees” also includes consultants, temporary employees, contract employees, and those persons hired pursuant to third-party contracts

© 2018 California Department of Transportation. All Rights Reserved.

State of California
DEPARTMENT OF TRANSPORTATION

Business, Transportation and Housing Agency

Memorandum

Flex your power!
Be energy efficient!

To: DIRECTOR
DEPUTY DIRECTORS
DISTRICT DIRECTORS
DIVISION CHIEFS

Date: December 22, 2009

From: MALCOLM DOUGHERTY
Interim Chief Engineer

Subject: Inclusion of Expiration Date on Engineering and Land Surveying Documents

Assembly Bill 645, which becomes effective January 1, 2010, deletes the requirement to include the license expiration date on engineering and land surveying documents.

The Department has considered the impending changes and has determined that engineering and survey documents prepared for the Department's use or for construction on the State Highway System will continue to include the expiration date on the seal or stamp.

The current business practice of including the expiration date is consistent with the Department's quality management policies and its desire to perpetuate only the highest quality engineering and surveying documents.

Please refer any questions on this policy to Terry Abbott or Linda Fong.

© 2018 California Department of Transportation. All Rights Reserved.

KIOSK

ADVERTISING/ DISPLAY

GUIDELINES

For
Safety Roadside Rest Areas

HEADQUARTERS LANDSCAPE

ARCHITECTURE PROGRAM

MAY 2009

© 2018 California Department of Transportation. All Rights Reserved.

KIOSK ADVERTISING GUIDELINES

SUBMITTAL

This program is "optional" at the discretion of the District Office.

Requests for placement of an advertisement/display within a Traveler/Tourist Information Center, hereinafter referred to as "Kiosk," shall be submitted by the responsible person (City, County, Chamber of Commerce, Organization or Business Owner) for that activity, service or facility, hereinafter referred to as the "Requestor," to the District's Representative.

Kiosk Advertising Guidelines are established from Barclays California Code of Regulations, Title 21·Public Works, Division·2 Department of Transportation, Chapter·20 Permissible Activity and Use of Safety Roadside Rest Areas (SRRA) and Vista Points in and along California State Highways, which authorize the placement of commercial advertisements/displays within kiosks.

- Article 2, Section 2204 (b) authorizes the placement of commercial displays under an agreement within Traveler Information Centers for a cost.
- Article 2, Section 2204 (d) defines Traveler Information Centers as kiosks.
- Article 2, Section 2204 (f) authorizes the Department to place Public Information displays/advertisements determined to be of a specific value, interest or assistance to the traveling public, for a cost.

Streets and Highway Codes Section 220.5 authorizes the placement of kiosks, within Safety Roadside Rest Areas (SRRA), and the following advertisements/displays are allowed for placement at no cost.

- Section 220 authorizes the placement of agricultural displays.
- Section 221 authorizes the placement of information regarding missing children.

Forty-percent (40%) of the kiosk space is devoted to non-commercial public information. The remaining sixty-percent (60%) may be utilized as follows:

Placement of an advertisement/display can be monthly, quarterly or semi-annual.

The format and content of the advertisement/display will be provided for review and consideration. The District SRRA Coordinator or District Landscape Architect is responsible for review, approval and processing of the submitted request.

Upon approval in writing from the Department, the advertisement/display can not be changed or altered in any way without the written consent of the Department.

Displays approved for placement can only provide public information regarding:

- local and state points of interest
- local communities and community service facilities
- location of recreational areas and facilities (campgrounds, etc)
- identification of local automotive service stations

© 2018 California Department of Transportation. All Rights Reserved.

- food
- lodging
- traveler service related facilities

FEE

The entire fee of the agreement, per advertisement/display, is required due upon written approval of the request. Payment of the fee shall be by personal or company check, money order or cashier's check, made out to the Department of Transportation.

Districts will assess the fee for the placement of the "advertising/display" based upon the following criteria:

1. Location of the SRRA
2. Distance of the SRRA in relation to the District Office (round-trip travel time, etc.)
3. Size of the advertising/display
4. Other district resources expended

The assessed advertising fee is subject to change at the end of the existing agreement period entered into by the requestor and the Department, at the discretion of the Department.

CONDITIONS OF INSTALLATION

Installation or removal of the advertisement/display upon any kiosk will solely be the responsibility of the Department. Under no circumstances can the requestor install, replace, repair, alter or remove the advertisement/display.

The Department reserves all rights, as stipulated within Barclays California Code of Regulations:

- to reject or refuse at its sole discretion any advertisement/display which is false or misleading, which may misinform, or which does not qualify as traveler information under the Department's rules and regulations.
- to reject, refuse or remove any advertisement/display which does not conform to the Department's specifications, which is deemed unsightly or in a bad state of repair.
- to cancel the agreement at any time, upon ten-days written notification.
- any delay in the placement of an advertisement/display or interruption of the display time caused by the Department shall not constitute a breach of the agreement. In its discretion, the Department may extend the term of the agreement or provide a pro rata credit equal to the period of delay or interruption. Such extension or credit shall be the only damages recoverable.
- to close the Safety Roadside Rest Area for any reason without notification, temporarily or permanently, or to cancel the agreement. The requestor shall have no claim for damages, or extension of the agreement by reasons of such removal, disruption, discontinuance or termination.

The Requestor is responsible for the production of the advertisement/display at their sole cost and expense.

The Requestor is responsible at their own cost and expense for, the restoration, repair or replacement of any advertisement/display which is lost, stolen, defaced, damaged, or destroyed through no fault of

© 2018 California Department of Transportation. All Rights Reserved.

the Department, or which is deemed by the Department to be in a faded, or deteriorated condition, regardless of the cause.

In this event, if the requestor fails to provide an acceptable replacement of the advertisement/display within thirty-days of notification, the Department may cancel the agreement.

The advertisement/display will be of a professional quality, printed on LEXAN or a comparable material pre-approved by the District SRRA Coordinator or District Landscape Architect, able to withstand adverse conditions, such as direct sunlight, rain or snow and able to endure the length of the agreement. The minimal size of the advertisement/display allowed shall be no less than 10" x 14," and a maximum size of 14" x 20." Advertisement/displays not enclosed within a protective casing shall be durable, and protected with an anti graffiti coating.

SPECIAL PROVISIONS

Sub-contracting or third party agreements **will not be allowed** for the request or placement of an advertisement/display. The requestor is required to be solely responsible for the service or facility, listed within the advertisement/display.

The requestor assumes full and complete responsibility and liability for the content of the advertisement/display, and shall agree to save, defend, indemnify and hold the State, the Department, its officers, agents and employees harmless against any and all demands, claims, liability, damages and causes of action, including attorney's fees and all costs of any legal action occasioned by or resulting from injuries or losses to any person, firm or corporation, however occurring, resulting from their reliance on the person's or company's advertisement/display or from the form, content or representations contained therein.

THESE GUIDELINES ARE SUBJECT OF CHANGE AT THE DISCRETION OF THE DEPARTMENT. IT IS THE REQUESTOR'S RESPONSIBILITY TO REMAIN CURRENT WITH THESE GUIDELINES.

© 2018 California Department of Transportation. All Rights Reserved.

STATE OF CALIFORNIA • DEPARTMENT OF TRANSPORTATION

KIOSK ADVERTISING/DISPLAY AGREEMENT

TR-0401 (REV. 05/2009)

The undersigned requests to place an advertisement/display within the Traveler/Tourist Information Center, hereinafter referred to as "kiosk" within the Safety Roadside Rest Area, and hereby agrees to the following conditions:

I have read the Kiosk Advertising/Display Guidelines, and conditions contained herein and agree to comply. And, understand that any failure to do so will result in termination of this agreement.

The requestor assumes full and complete responsibility and liability for the content of the advertisement/display, and shall agree to save, defend, indemnify and hold the State, the department, its officers, agents and employees harmless against any and all demands, claims, liability, damages and causes of action, including attorney's fees and all costs of any legal action occasioned by or resulting from injuries or losses to any person, firm or corporation, however occurring, resulting from their reliance on the person's or company's advertisement/display or from the form, content or representations contained therein.

The name on the agreement shall be that of the responsible party for that service or facility. Sub-contracting or third-party agreements **will not be allowed** for the placement of an advertisement/display. The requestor is required to be solely responsible for the service or facility, listed within the advertisement/display.

The advertisement/display shall be of a professional quality, printed on LEXAN or a comparable material pre-approved by the SRRA Coordinator, able to withstand adverse conditions, such as direct sunlight, rain or snow and able to endure the length of the agreement. The minimal size of the advertisement/display allowed shall be no less than 10" x 14," and a maximum size of 14" x 20." Advertisement /displays not enclosed within a protective casing shall be durable, and protected with an anti graffiti coating.

The requestor is responsible for the production of the advertisement/display at their sole cost and expense.

The format and content of the advertisement/display shall be provided for review. Upon approval in writing from the department, the advertisement/display shall not be changed or altered in any way without the written consent of the Department.

The requestor is seeking placement in the following SRRA:

NAME OF BUSINESS OR ORGANIZATION	OWNER OR REPRESENTATIVES NAME	PHONE NUMBER
ADDRESS		E-MAIL ADDRESS
OWNER OR REPRESENTATIVES SIGNATURE ▶		

NAME OF SAFETY ROADSIDE REST AREA	DIRECTION	TYPE OF ADVERTISEMENT/DISPLAY	FEE ASSESSED
			@ SEMI-ANNUALLY ☐
			@ ANNUAL ☐
			TOTAL:

DISTRICT USE ONLY

APPROVAL: YES ☐ NO ☐ COMMENTS: _____

CASHIER

INITIALS BY _____ DATE _____ ☐ CASH ☐ CHECK ☐ MONEY ORDER ☐ OTHER _____

AGREEMENT PERIOD

BEGINNING DATE _____ ENDING DATE _____

DISTRICT REPRESENTATIVES NAME	PHONE NUMBER
DISTRICT REPRESENTATIVES SIGNATURE ▶	E-MAIL ADDRESS

© 2018 California Department of Transportation. All Rights Reserved.

State of California

Business, Transportation and Housing Agency

Memorandum

Flex your power!
Be energy efficient!

To: DEPUTY DISTRICT DIRECTORS
for Planning

DEPUTY DISTRICT DIRECTORS
for Operations

Date: August 2, 2004

From: BRIAN J. SMITH
Deputy Director
Planning and Modal Programs

LAWRENCE H. ORCUTT
Acting Deputy Director
Maintenance and Operations

Subject: Guidelines for Submitting Transportation Information from a Reporting or Monitoring Program to the California Department of Transportation (Department), Revised July 9, 2004

The California Environmental Quality Act (CEQA), (Public Resources Code [PRC] Section 21081.6) requires that public agencies adopt a reporting or monitoring program when they include environmental impact mitigation as a condition of project approval. PRC Section 21081.7 requires that public agencies submit such information to the Department if the project is of statewide, regional or area-wide significance; in addition, 21081.7 requires that the Department adopt guidelines for the submittal of such information.

In February 2003, the Department issued *Guidelines for Submitting Transportation Information From a Reporting or Monitoring Program to the Department* (Guidelines).

We revised the Guidelines, effective July 9, 2004, in response to comments and questions that we received following distribution of the February 2003 edition. The new Guidelines seek to clarify the procedures for the Department and public agencies by providing a bit more detail to the steps that we are asking them to take. In addition, we have modified the Checklist/Certification form to more easily accommodate its purposes.

The revised Guidelines are enclosed, as is a sample cover letter for use in forwarding them from district Intergovernmental Review (IGR) units to local public agencies.

Please direct questions to Tom Neumann, Chief, Office of Community Planning at Calnet 8-461-6882, or Paul Cavanaugh, Chief, Encroachment Permit Branch at Calnet 8-464-6232.

Enclosures:
1. Guidelines, including "Checklist/Certification" form
2. Sample cover letter.

"Caltrans improves mobility across California"

© 2018 California Department of Transportation. All Rights Reserved.

c: Joan Sollenberger, DOTP
Karla Sutliff, DOTO
District Directors
Paul Cavanaugh, DOTO, Encroachment Permit Branch
Maxine Ferguson, Legal Division
Robert Wiswell, Division of Aeronautics
District IGR Coordinators
Tom Neumann, DOTP,OCP
Terri Pencovic, DOTP, OCP, IGR

© 2018 California Department of Transportation. All Rights Reserved.

Guidelines for Submitting Transportation Information from a Reporting or Monitoring Program to the California Department of Transportation

for a

Project of Statewide, Regional, or Areawide Significance

California Department of Transportation

July 9, 2004

© 2018 California Department of Transportation. All Rights Reserved.

GUIDELINES FOR SUBMITTING TRANSPORTATION INFORMATION FROM A REPORTING OR MONITORING PROGRAM TO THE CALIFORNIA DEPARTMENT OF TRANSPORTATION (DEPARTMENT)

INTRODUCTION

The California Environmental Quality Act (CEQA) requires, under Public Resources Code (PRC) Section 21081.6, the adoption of reporting or monitoring programs when public agencies include environmental impact mitigation as a condition of project approval. Reporting or monitoring takes place after project approval to ensure implementation of the project in accordance with mitigation adopted during the CEQA review process.

Assembly Bill 1807 (effective January 1, 2001) amended the PRC in a number of ways. Section 21080.4 was amended to add a requirement that lead agencies submit Notices of Preparation (NOPs) to the Governor's Office of Planning and Research when they determine that an environmental impact report will be required to approve a project.

Section 21081.7 was amended with two additional provisions. The first provision required that transportation information resulting from a reporting or monitoring program adopted by a public agency in accordance with Section 21081.6 be submitted to the Department of Transportation (Department) when a project has impacts that are of statewide, regional, or area-wide significance. The second provision required that the Department adopt guidelines for the submittal of those reporting or monitoring programs.

PURPOSE

The purpose of these guidelines is to establish clear and consistent statewide procedures to be used by both Department District Intergovernmental Review (IGR) Program Coordinators to identify the scope and timing of transportation information needed from lead agencies, and public agencies when submitting transportation information to the Department, in accordance with Section 21081.7.

© 2018 California Department of Transportation. All Rights Reserved.

PROCEDURES

A. The District IGR Program Managers and/or Coordinators shall:

1. Prior to implementation of mitigation measures:

   a. Notify the CEQA lead agency by letter during "early consultation," the Notice of Preparation (NOP) stage, or the Initial Study (IS) phase of the CEQA review process that the transportation information included in the reporting or monitoring program will need to be provided to the Department following project mitigation agreement.

   b. Provide the name, address, and telephone number of the District IGR contact to the lead agency.

   c. Provide, as an enclosure to the notification letter, a copy of these "Guidelines" and the Department's "CEQA Lead Agency Checklist/Certification" form. (Part 1 of the form, *Checklist*, is to be signed by the lead agency following project approval, and a copy submitted to the District along with the transportation reporting or monitoring information. Part 2 of the form, *Certificatio*n, is to be signed by the lead agency and the District upon implementation of all agreed-upon mitigation measures.)

2. Following implementation of mitigation measures as identified in Part 1, *Checklist,* of the CEQA Lead Agency Checklist/Certification form, and certification of implementation by the lead agency in Part 2, *Certification*:

   Ensure sign off of Part 2, indicating that the mitigation measures have been implemented.

   1) If the project required encroachment onto a state highway, obtain the District Permit Engineer's signature in Part 2.

   2) If the project did not involve encroachment onto a state highway, the District IGR Coordinator shall sign Part 2.

© 2018 California Department of Transportation. All Rights Reserved.

3) The District IGR Coordinator shall: (a) Retain the original document; (b) forward a copy to the District Permit Engineer (if the Permit Engineer signed Part 2); (c) forward a copy to the Department's Headquarters IGR Program Manager; and, (d) send a copy to the lead agency.

B. The CEQA lead agency shall:

1. Following project approval:

Submit the following information to the Department District IGR contact:

1) Name, address, and telephone number of the CEQA lead agency contact responsible for the mitigation reporting or monitoring program.

2) Location and custodian of the documents or other material, which constitute the record of proceedings upon which the lead agency's decision to approve the project is based.

3) Assurances that the Department can obtain copies of the aforementioned documents and materials, if needed, to clarify details or resolve issues related to the mitigation adopted.

4) Detailed information on impact assessment methods, the type of mitigation, specific location, and implementation schedule for each transportation impact mitigation measure included in the reporting or monitoring program.

5) A copy of the "CEQA Lead Agency Checklist/Certification" form, with Part 1, *Checklist,* signed and dated, and the reporting or monitoring program transportation information attached or enclosed. The CEQA lead agency, at its discretion, may submit the complete reporting or monitoring program with the required transportation information highlighted.

© 2018 California Department of Transportation. All Rights Reserved.

2. Following implementation of mitigation measures:

   a. Sign and date Part 2, *Certification,* of the "CEQA Lead Agency Checklist/Certification" form.

   b. Forward the "CEQA Lead Agency Checklist/Certification" form, with appropriate completion documents attached, to the District IGR contact, certifying that the mitigation measures agreed upon and identified in the reporting or monitoring program have been implemented, and that all other reporting requirements have been adhered to, in accordance with PRC Sections 21081.6 and 21081.7.

APPROVED:

Brian J. Smith 8 July 04	L. H. Orcutt 7-9-04
BRIAN J. SMITH — Date	LARRY ORCUTT — Date
Deputy Director	Acting Deputy Director
Planning and Modal Programs	Maintenance and Operations

© 2018 California Department of Transportation. All Rights Reserved.

CEQA LEAD AGENCY CHECKLIST/CERTIFICATION ♦

TRANSPORTATION INFORMATION FROM A REPORTING OR MONITORING PROGRAM

Part 1 - Checklist

Project Name: _____

Lead Agency: _____

Lead Agency Contact (Name, Title, Agency, Address & Phone): _____

_____

State Clearinghouse (SCH) File #/s: _____

Document Type/s: _____

Findings & Approval Date/s: _____

_____

Project Proponent (Name, Title, Company, Address & Phone): _____

_____

For each specific Transportation Related Mitigation Measure associated with this Project, The following information items are included in the attached materials:

Yes	No	
☐	☐	**Location/Custodian Of CEQA Documents, Proceedings, Records**
☐	☐	**Description Of How To Obtain Copies Of Above Documents**
☐	☐	**Mitigation Measure Name & Identifying Number**
☐	☐	**Detailed Description of Measure & its Purpose (attach blueprints if necessary)**
☐	☐	**Measure Location Description, Latitude/Longitude, & Vicinity Map**
☐	☐	**Location of Impacted State Highway Component (County, Route, Postmile)**
☐	☐	**Caltrans Encroachment Permit Number (if one was needed)**
☐	☐	**Copy of Other Agency Permits required for this Measure (if needed)**
☐	☐	**Completion Criteria (including detailed performance objectives)**
☐	☐	**Implementation Schedule**
☐	☐	**Estimated Monetary Value of Completed Measure & % Local Agency Funded**
☐	☐	**Responsible Contractor (Name, Company, Address & Phone)**

The above project mitigation measures will be implemented as indicated in the adopted reporting or monitoring program, and the California Department of Transportation will be notified upon implementation.

_____ _____

CEQA Lead Agency **Date**

Part 2 - Certification

We certify that the agreed upon mitigation measures have been implemented, and all other requirements have been adhered to, in accordance with PRC Sections 21081.6 and 21081.7. Attached: 1. Completion evaluation (including field inspection reports); 2. Photograph of completed measure.

Signature & Date: _____ _____

Name: _____ _____

Title: _____ _____

CEQA Lead Agency **California Department of Transportation**

♦ **This form is to be used by public agencies to submit their mitigation reporting or monitoring programs to the California Department of Transportation (Department) when a CEQA project has been found to have transportation or circulation impacts that are of statewide, regional, or area-wide significance. Copies of this form, and the Department Guidelines developed pursuant to PRC Section 21081.7, can be downloaded from our website (http://www.dot.ca.gov/hq/tpp/offices/ocp/igr_guidelines_procedures.htm). Completed form with attached materials may be post-mailed, e-mailed, or faxed to the appropriate Department District Planning Office, Attention: Intergovernmental Review (IGR) Coordinator. {Form Version 07/2004}**

© 2018 California Department of Transportation. All Rights Reserved.

GUIDELINES

for the placement of

TRAVELER DISCOUNT BOOKLETS
In
AMTRAK-CALIFORNIA STATIONS
&
SAFETY ROADSIDE REST AREAS

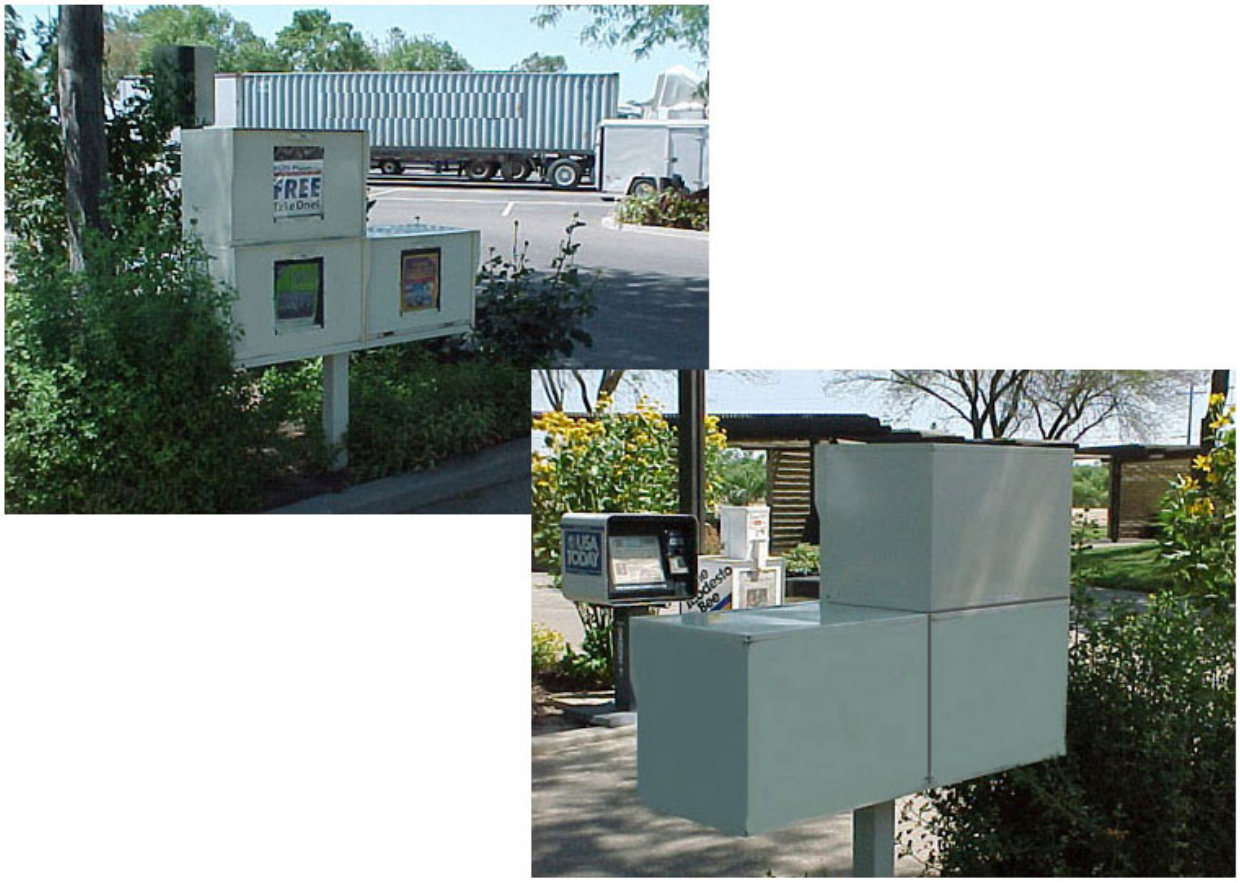

OCTOBER 2007

© 2018 California Department of Transportation. All Rights Reserved.

COUPON BOOKLET GUIDELINES
SPECIAL PROVISIONS & PERMIT CONDITIONS

Definition

Periodical vendors, herein after referred to as Coupon Booklet Vendors (CBV), offer discount coupons for lodging and entertainment to the traveling public.

Written Agreement

The Department's representative for Amtrak-California Stations will be the Chief of the Rail Marketing Branch, Division of Rail.

The Department's representative for Safety Roadside Rest Areas (SRRA) will be the District Rest Area Coordinator.

CBV companies requesting to place their coupon booklet(s) within Amtrak-California Stations and SRRA are first required to enter into a written agreement with the Department, administered by the Headquarters Office of Encroachment Permits.

This written agreement shall stipulate the reserving of four full-pages for departmental campaign advertisements within their respective publications, to be administered by the Statewide Events & Awards Coordinator, in the Headquarters Office of External Affairs.

The Department's advertisements will consist of Slow for the Cone Zone, Amtrak-California, California Highway Information Network (CHIN) and Don't Trash California. These campaign advertisements shall be effectively placed in the booklets upon finalization of the written agreement.

The location of placement of the Department's campaign advertisements within the publications is at the discretion of the CBV, so long as the pages appear either before the first page of lodging coupons or, after the final page of lodging coupons.

The CBV agree to endeavor to place the Department's campaign advertisements together, facing each other whenever the paid composition of the publication permits.

When, and if constraints are imposed upon the CBV by the placement of paid advertising, the CBV shall still be obligated to provide the advertisements at their discretion within the areas of the publications as prescribed above.

The Department retains the right and privilege to prescribe the content of the four full-page advertisements during the course of the written agreement and thereafter.

Each CBV will deliver 2 copies of each new publication printed to the Statewide Events & Awards Coordinator, HQ Office of External Affairs, and 2 copies of each new publication printed to the Chief, Rail Marketing Branch, Division of Rail, 1120 N Street, MS-74, Sacramento, California 95814.

Application Submittal

Upon confirmation of the revised agreement, each CBV will only be required to submit one standard encroachment permit application, for the issuance of one statewide biennial permit allowing the continual distribution and maintenance of their facilities. In the box labeled "description of work to be performed", the applicant shall state the intent for the "placement and maintenance of Traveler Discount Coupon Booklets, and/or facilities."

© 2018 California Department of Transportation. All Rights Reserved.

In the event that placement is sought where there are no existing facilities, as a new installation, will require the CBV to submit an exempt encroachment permit rider request, and the CBV shall be responsible for all costs incurred with the installation of new facilities.

Permit Fee

All permits are to be issued "exempt" for periodical distribution, and shall be issued as biennial permits (2-years).

Special Provisions

The Department will allow for the placement of these booklets for each year following as long as the respective parties adhere to the conditions of the written agreement entered into:

District 11 Encroachment Permit Office will issue a statewide biennial "CU" encroachment permit, listing the specific Amtrak-California Stations and SRRA locations statewide, following the permit special provisions, on the following pages of the permit. All respective districts will receive cc: copies of the statewide permits issued.

Require the placement of a laminated placard depicting the cover of the booklet to be placed within the window of the display box.

The CBV booklets will be allowed in the Department's Headquarters building, on the sixth floor outside of the cafeteria area and in Amtrak-California Stations stipulated within their permit, to be placed within facilities provided by the CBV.

Permit Conditions

Subcontracting under this permit will not be allowed for the placement of the coupon booklets.

The CBV is required to provide weekly maintenance checks on all distribution facilities, to ensure cleanliness of the area surrounding their facilities and to ensure that the traveling public is provided with current information at no cost to the public.

Storage of coupon booklets upon State rights-of-way or within the Amtrak-California termini will not be allowed.

The CBV is required to notify the Department's representative a minimum of two days prior to entry into any of the locations stipulated within their respective permit and/or the States' rights-of-way.

Any combination of three violations of the special provisions or permit conditions within the term (two-years) of the permit will result in suspension and/or revocation of your permitted privileges.

Installation Conditions

All new installations of distribution facilities shall be installed and maintained by the CBV under the direction of the Department's representative and shall be in compliance with the following criteria:

Upon completion on the installation of the distribution facilities located within an Amtrak-California Station or SRRA, said facilities inherently become the property of the State of California.

Within each Amtrak-California Station or SRRA, all distribution facilities (boxes and pedestals) shall all be of the same type, model, manufacturer and color (see Attachment #1 & #2) to ensure a uniform appearance is maintained as directed by the Department's representative and per the attachments provided.

© 2018 California Department of Transportation. All Rights Reserved.

The color for new distribution facilities shall be consistent at a location but may be a color other than Beige, as determined by the Department's representative.

The distribution facility should be located in an area where it will be unobtrusive and not detract from other elements of the SRRA.

The distribution facility should be located within the planted areas wherever practicable, adjacent to walkways and electroliers to reduce the exposure to vandalism and theft, or as directed by the Department's representative.

It will be located so that it is convenient and easily accessible to the traveling public, as directed by the Department's representative.
The front of the distribution facility should be parallel with the edge of the walkway.

The maximum number of distribution boxes shall not exceed four (a double stack of two) in any SRRA.

The distribution boxes located within SRRA are to be securely fastened to square steel pedestal mounts, which are to be set in a concrete footing located within the planted area. The top of the concrete footing is to be covered with soil, mulch or ground cover to restore the area to its previous appearance to as great an extent as possible. Distribution boxes furnished with a pedestal mount equipped with a steel flange base designed to be bolted to concrete surfaces are to be used only where directed by the Department's representative.

All distribution facilities shall be free of any advertisements (see Attachment #3) and shall be maintained in a clean, neat and attractive condition and in good repair at all times. Any facilities (boxes, pedestals, and racks) that are damaged, in a state of disrepair, or due to wear and tear which are no longer in a presentable condition (clean, neat and attractive) shall be replaced or repaired by the CBV as soon as practicable after discovery or notification by the Department's representative to do so.

All distribution facilities which have been lost, stolen or vandalized and facilities that are no longer to be used, shall be removed, replaced or repaired by the CBV as soon as practicable after discovery or notification by the Department's representative to do so.

The CBV is responsible for removal of the remaining facilities when any distribution facility is missing, vandalized or unused, and there is not intent to replace it in kind. The site shall be returned to its original condition.

THESE GUIDELINES ARE SUBJECT TO CHANGE AT THE DISCRETION OF THE HEADQUARTERS OFFICE OF ENCROACHMENT PERMITS. IT IS THE RESPONSIBILITY OF THE PERMITTEE TO REMAIN CURRENT WITH THE SPECIAL PROVISIONS AND PERMIT CONDITIONS OF THESE GUIDELINES.

© 2018 California Department of Transportation. All Rights Reserved.

ATTACHMENT #1

COUPON BOOK DISTRIBUTION BOXES

FACE VIEW

BEIGE COLOR

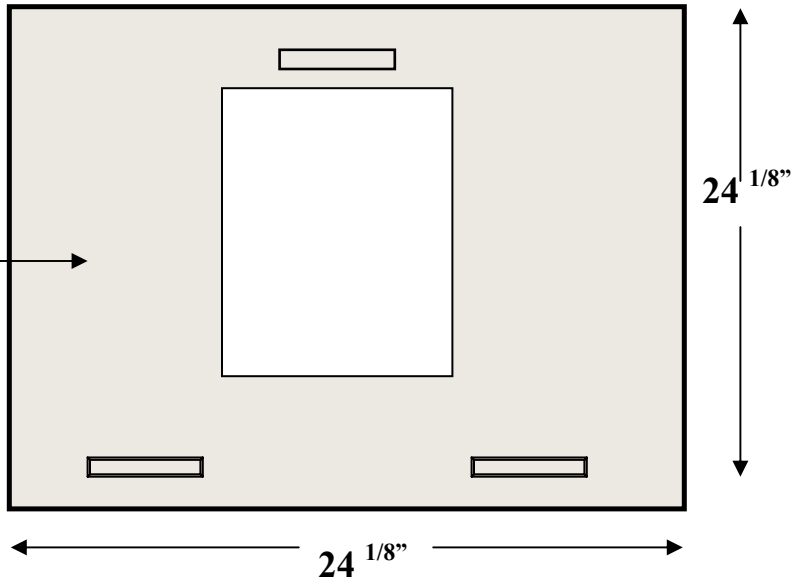

SIDE VIEW

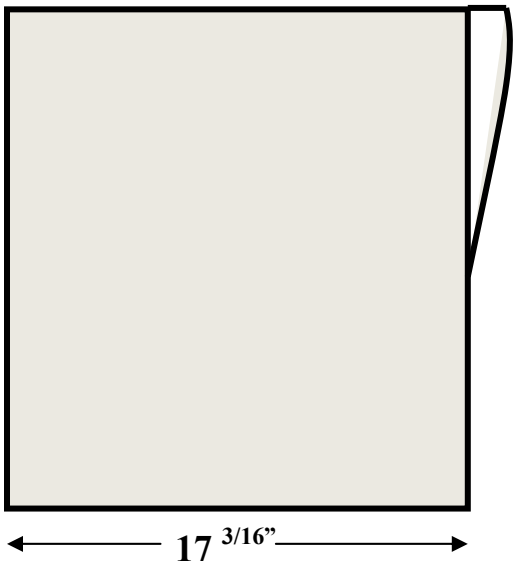

DOUBLE BOX DIAGRAM

TOP VIEW
Of
BASE TRAY

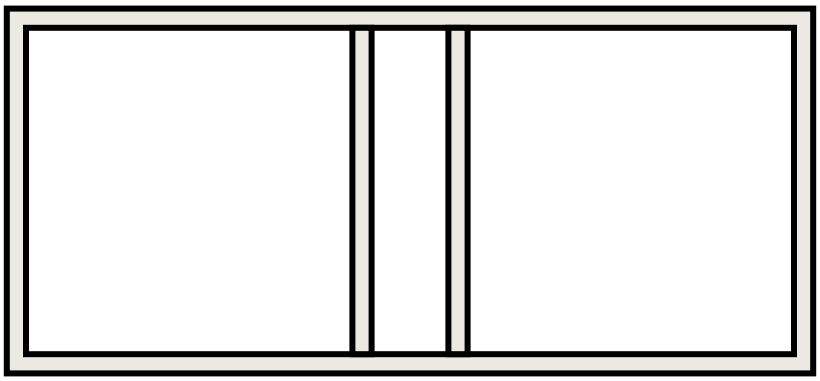

© 2018 California Department of Transportation. All Rights Reserved.

ATTACHMENT #2

PEDESTAL

SINGLE BOX DIAGRAM

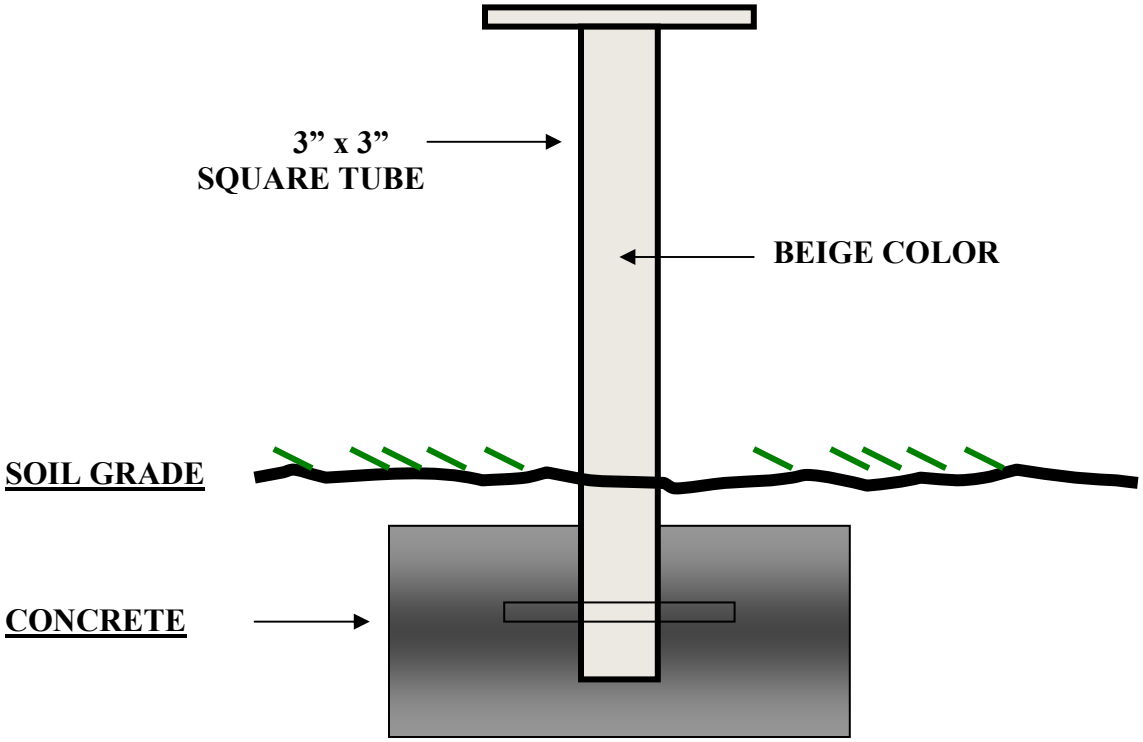

The distribution boxes are to be securely fastened to square steel pedestal mounts, which are to be set in a concrete footing located within the planted area. The top of the concrete footing is to be covered with soil, mulch or ground cover to restore the area to its previous appearance to as great an extent as possible. Distribution boxes furnished with a pedestal mount and equipped with a steel flange base that are designed to be bolted to concrete surfaces are to be used only where directed by the Department.

© 2018 California Department of Transportation. All Rights Reserved.

ATTACHMENT #3

This illustration shows the appearance in how the placements of these distribution facilities are to appear in the Safety Roadside Rest Areas. Also shown is what is acceptable for placement in the door window and what is NOT.

© 2018 California Department of Transportation. All Rights Reserved.

CALTRANS
ENCROACHMENT PERMITS

GUIDELINES AND SPECIFICATIONS
FOR
TRENCHLESS TECHNOLOGY PROJECTS

AUGUST 2018

© 2018 California Department of Transportation. All Rights Reserved.

TABLE OF CONTENTS

PROCEDURAL REQUIREMENTS FOR DESIGN AND CALCULATIONS OF STRUCTURAL AND SUB-STRUCTURAL PROJECTS 3
Structural Design and Calculations 3
Substructural Design and Calculations 3
Project Owner's Responsibilities 4
Contractor's Responsibilities 4

TUNNELING PROJECTS 5
Cal/Osha Requirements 5
Tunnel 6
Tunnel Shield 6
Tunnel Lining 6
Lagging 7
Construction of Shafts and Pits 7
Placement of Shafts and Pits 7
Excavation 8
Dewatering 8
Grouting 8
Materials 9
Project Owner's Responsibilities 9
Contractor's Responsibilities 10

ENCASEMENT REQUIREMENTS 11

BORE & JACK 12
Bore and Receiving Pits 12

HORIZONTAL DIRECTIONAL DRILLING 13
Soil Investigations 13
Pre-construction & Site Evaluation 14
Installation Requirements 14
Permittee/Contractor Responsibilities 15
Drilling Fluids Management Plan 16
Previous Experience 16
Safety 16
Contingency Plans 17
Communications Plan 17
Drilling Operations 17
Equipment Setup and Site Layout 17
Drilling and Back-Reaming 17
Break-away Pulling Head 17
Protective Coatings 18
Drilling Fluid - collection and disposal practices 18
Site Restoration and Post Construction Evaluation 18

MICRO-TUNNELING 19
Micro-tunneling Plan Set Submittal 19
Contractor's Submittal 20

PIPE RAMMING 21

PIPE BURSTING 22

© 2018 California Department of Transportation. All Rights Reserved.

PROCEDURAL REQUIREMENTS FOR DESIGN AND CALCULATIONS OF STRUCTURAL AND SUB-STRUCTURAL PROJECTS

All submittals shall be stamped by a Registered Structural Engineer, or a Registered Civil Engineer, with a minimum of five years' experience in structural design and preparation of calculations, proof of experience is required by use of Encroachment Permits form "Certification of Structural Experience" (form TR-0133) to be included within the project package submittal.

STRUCTURAL DESIGN AND CALCULATIONS

All Structural Project submittals (structures and structural falsework) will require review by Structures Maintenance, for construction under an encroachment permit and require the following:

Designed plans and specifications, calculations and details (structural and falsework).

A geotechnical investigation and soil analysis by a licensed geotechnical engineer is required. It shall provide identification of any locations of difficulty, changes in soil formation, or mixed face conditions that could present or create ground loss, exploratory soil corings and logs are required along the alignment of the project.

Construction or Structures Construction may provide oversight.

SUB-STRUCTURAL DESIGN AND CALCULATIONS

Sub-structural projects may consist of, but are not limited to, drainage boxes & systems, tunneling projects (mechanical or manual tunnel excavations for the placement of tunnel supports), and Trenchless Technologies for the installation of utilities when the diameter is 30" or larger (jack & bore, micro-tunneling, horizontal directional drilling, or pipe-ramming).

When the distance between the tunnel and an existing structure is less than twenty times its diameter, it shall be sent to Structures Maintenance for review of the potential lateral loading effects to the pilings and foundation.

Otherwise, Sub-structural Project submittals, listed below and submitted with the "Certification of Experience" (form TR-0133) **do not** require review by Structures Maintenance or Underground Structures.

- Micro-tunneling projects.
- Bore & Jack, HDD, or Pipe Ramming (hole-diameter is 30" or larger and requiring structural/sub-structural design, investigations and calculations)
- Tunneling for the placement of tunnel support systems (rib & lagging, or steel liner plate requiring structural/sub-structural design, investigations and calculations).
- Drainage boxes and systems.

All Sub-structural Project submittals require the following:

The District Encroachment Permits Office is responsible for verification of the Registered Engineer's stamp, validation of the date of expiration against the dated plan set and calculations. The permit office engineer shall validate the RE's stamp at the web site listed below, by entering the RE's number. A copy of the results shall be printed and included within the permit file. The encroachment permit may be issued, upon completion of the normal review process (Traffic, Environmental, R/W, etc.).

© 2018 California Department of Transportation. All Rights Reserved.

http://www2.dca.ca.gov/pls/wllpub/wllqryna$lcev2.startup?p_qte_code=ENG&p_qte_pgm_code=7500

- Designed plans and specifications, calculations and details (liner plates, rib & lagging, bracing, etc.).
- A geotechnical investigation and soil analysis by a licensed geotechnical engineer is required. It shall provide identification of any locations of difficulty, changes in soil formation, or mixed face conditions that could present or create ground loss, exploratory soil corings and logs are required along the alignment of the project.
- When the length of the tunnel is greater than four hundred feet (> 400'), alignment holes may be required. Alignment holes shall be drilled at a maximum spacing of two-hundred feet (200') and a casing of four to six inches (4" to 6") in diameter installed vertically, to a depth necessary for the installed casing to extend into the tunnel excavation. When alignment holes fall within the pavement area of the roadway, the pavement shall be saw-cut, a cover shall be placed over the end of the casing at grade, and the space around the casing within the roadway filled with concrete (EXCEPT in controlled access right-of-way).

PROJECT OWNER'S RESPONSIBILITIES

On projects deemed by the Department as requiring full time inspection, the project owner is responsible for providing a third-party full-time inspector.

A full-time Safety Engineer: A Registered Structural or Civil Engineer, with a minimum of five years' experience in design or inspection of Sub-structural Projects (tunnels). Proof of experience shall be submitted on Encroachment Permits form "Certification of Structural Experience" (form TR-0133) **or**

A full-time Safety Representative: State certified by Department of Industrial Relations, Cal/OSHA Mining & Tunnel Unit, proof of certification is required. California Code of Regulations 8406(f), (h)

CONTRACTOR'S RESPONSIBILITIES

Prior to issuance of the "DP" permit the following shall be submitted:

- Proof of experience, as stipulated by the District Office, in respect to diameter and length of proposed project.
- Tunnel support system construction plans and specifications, calculations and details, method of construction, to include the adequacy of the shield and liner material stamped by a Registered Structural Engineer, or a Registered Civil Engineer, with a minimum of five (5) years' experience in sub-structural design and preparation of calculations.
- "Notice of Materials to be used" (form CEM-3101).
- Method of construction plan.
- A Licensed Surveyor.
- Proof of rib expanders and/or liner supports.
- Working schedule of the project.
- Contingency plan for dealing with ground loss work.
- Shaft; soil stability at portals and ground improvement plan.
- Dewatering plans for entry and exit shafts/pits, if needed.
- Installation and monitoring of SWPPP or WPCP facilities and conditions.
- Shoring design for entry and exit shafts/pits.
- Survey control plan: lasers, laser mounting, laser checking.
- Ground surface settlement monuments and subsurface settlement monuments monitoring program plan.
    - Buried points

© 2018 California Department of Transportation. All Rights Reserved.

TUNNELING PROJECTS

All projects will vary in their own characteristics. General similarities are listed below to provide a general understanding of these types of projects.

Establishment of a survey-grid line and existing elevation points shall be over the centerline and wing points of the installation.

Designed plans and specifications, calculations and details (liner plates, rib & lagging, bracing, etc.) shall be stamped by a Registered Structural Engineer, or a Registered Civil Engineer, with a minimum of five (5) years' experience in sub-structural design of tunnels. Proof of experience shall be submitted on "Certification of Structural Experience" (form TR-0133) in conjunction with project package submittal.

A geotechnical investigation and soil analysis by a licensed geotechnical engineer/engineering geologist is required. It shall provide identification of any locations of difficulty, changes in soil formation, or mixed face conditions that could present or create ground loss, exploratory soil corings and logs are required along the tunnel alignment at intervals of twenty-five to one-hundred feet {25' to 100'}.

When the length of the tunnel is greater than four hundred feet (> 400'), alignment holes may be required. Alignment holes shall be drilled at a maximum spacing of two-hundred feet (200') and a casing of four to six inches (4" to 6") in diameter installed vertically, to a depth necessary for the installed casing to extend into the tunnel excavation. When alignment holes fall within the pavement area of the roadway, the pavement shall be saw-cut, a cover shall be placed over the end of the casing at grade, and the space around the casing within the roadway filled with concrete (EXCEPT in controlled access right-of-way).

CAL/OSHA REQUIREMENTS

The California Code of Regulations (CCR) mandates the following requirements for Tunneling Projects.

- The Owner or Local Entity proposing the construction of the tunnel shall make a full submittal to the Department of Industrial Relations, Cal/OSHA, to determine tunnel classification. CCR 8422
- Development of a check-in/check-out procedure to ensure an accurate account of personnel underground in the event of an emergency. CCR 8410
- Development of an Emergency Plan, that outlines duties and responsibilities of all personnel on the project during an emergency. The plan shall include ventilation controls, firefighting equipment, rescue procedures, evacuation plans and communications. CCR 8426
- Cal/OSHA requires a State of California certified person performing the duties of gas tester or safety representative to be certified by passing a written and an oral examination administered by the Cal/OSHA Mining & Tunneling Unit. CCR 8406(f), (h)
- A certified safety representative shall direct the required safety and health program and must be on-site while employees are engaged in operations during which the Tunnel Safety Orders (TSO) apply. CCR 8406(f)
- The certified safety representative must have knowledge in underground safety, must be able to recognize hazards, and must have the authority to correct unsafe conditions and procedures subject to the TSO. CCR 8406(f)

A State of California certified gas tester is required for the following operations:

- All classifications other than non-gassy
- Projects during which diesel equipment is used underground
- Hazardous underground gas conditions. CCR 8470

© 2018 California Department of Transportation. All Rights Reserved.

TUNNEL

Tunnel construction is accomplished by the method of Hand-mining, or by Mechanical means, and the use of a protective shield.

Continuous monitoring and observation of the ground surface above the tunnel is required. In some cases, it may be required to survey and record elevations along the survey grid line, several times a day, or daily.

Generally, when tunneling in good ground, tunnels with a diameter of less than eight-feet (< 8') and less than three-hundred feet to four-hundred feet (300' to 400') in length may be holed-through (excavated completely) before concreting the interior of the tunnel, when placement of pre-fabricated or pre-cast pipe is to be installed. When this is proposed, hole-through (unsupported length) before concreting of the interior of the tunnel, it shall be justified by the original subsurface geotechnical investigation and design.

Tunnel lining and bracing should consist of steel ribs and steel spreaders (dutchmen) with wood, concrete, or steel lagging, or with bolted steel liner plates.

Fireproof materials should be utilized in all construction of plant structures, above ground, within one hundred feet (100') of the shaft or tunnel. The use of flammable materials or wood shoring would require that adequate fire protection be provided.

Ventilation systems shall be established and provide a minimum of two hundred (200) cfm per worker.

- All equipment shall maintain a minimum clearance of twenty-five feet (25') from opening.
- An established contingency plan in the event of ground loss.
- Cranes utilized in operations shall maintain minimum required clearances.

TUNNEL SHIELD

- The face of the shield shall be provided with a hood or an approved grid system.
- The excavation face shall have a sufficient length to allow for the installation of one (1) complete ring of liner plates, or one (1) complete set of ribs and lagging before advancing.
- The contractor shall submit details and design information of the shield.

TUNNEL LINING

Tunnel lining and bracing should consist of steel ribs and steel spreaders with wood lagging and concrete, or steel lagging, or with bolted steel liner plates.

The tunnel liner and bracing shall be designed (calculations provided) of an adequate strength based upon the geotechnical investigation, soil analysis, loading, and the diameter and depth of cover to provide adequate support of the tunnel.

- A ring expander shall be used to expand the rib continuously outward and upward.
- Liner plates shall be designed based on joint strength, minimum stiffness, critical buckling of the liner plate wall, and deflection or flattening of the tunnel section.
- On tunnels with a diameter greater than ten feet (> 10'), the placement of ribs inside of liner plate may be required.
- When the geotechnical investigation has determined that silts and fine sands exist, that may flow under pressure, all liner plates shall include a neoprene gasket adhered to each flange face.

© 2018 California Department of Transportation. All Rights Reserved.

LAGGING

Generally started at spring line and continue upwards towards the crown. Lag spacing consists of three methods:

1. Wedging – done by driving a block of wood between the earth and the lag at each end, or by driving a wedge between the rib and the lag.
2. Stops – by welding small angles to the ribs outer flange to prevent sliding.
3. Clamps – which are applied to wood or steel lags.

If the spacing of lags between ribs is used in tunnel construction, packing between lags with filler may be required.

- Lags are boards or steel plates placed longitudinally against the roof and walls of the tunnel excavation.
- Steel lagging may consist of channel, liner plate or corrugated metal.
- Steel lagging thickness shall be designed on strength based upon the geotechnical investigation, soil analysis, and loading.
- Wood lagging thickness shall be designed on strength based upon the geotechnical investigation, soil analysis, loading. Generally wooden lags common size is three-inches by six-inches (3" x 6"), and the length is cut according to the spacing of the ribs.
- A minimum of one liner plate per ring with a two-inch (2") diameter coupling for grouting is required.

CONSTRUCTION OF SHAFTS / PITS

Shafts / pits should be constructed of a proper size and shape, and equipped as to allow work to be carried on safely.

- Shafts must be constructed of driven steel sheet pilings, steel bracing and tight wood, or steel lagging or steel liner plates and ribs.
- The removal of spoils should be accomplished by mechanical means (muck box).
- All shafts must be provided with guardrail and a toeboard.
- When ladders are utilized within the shaft or pit, cages and/or safety devices must be provided on depths of 15 feet to 20 feet, platforms must be provided at depths of greater than 20 feet.
- Ventilation systems must be established and provide a minimum of 200 cfm per worker.
- All equipment must maintain a minimum clearance of 25 feet from openings.
- Upon completion of project all shafts, pits and drifts that are not part of the finished product must be backfilled.

PLACEMENT OF SHAFTS / PITS

Shafts /Pits must be:

- Preferred to be located as far from the traveled way as feasible. At minimum, should be located 10 feet from the edge of pavement in rural areas, or at least 5 feet beyond the concrete curb and gutter or AC dike in urban areas, or at least 5 feet beyond the toe of slope of embankments.
- Located outside of access-controlled right-of-way.
- Adequately fenced or have a Type-K barrier placed around them at a 10:1 taper or as otherwise directed.

© 2018 California Department of Transportation. All Rights Reserved.

- Shored according to Cal-OSHA minimum requirements. Located within 15 feet of traffic lanes on a State highway must not extend more than 36 inches above the pavement grade unless otherwise authorized by the State representative. Reflectors must be affixed to the sides facing traffic, and placement around the perimeter of a 6-foot chain link fence during non-working hours.
- Are only allowed within access-controlled right-of-way for direct access-controlled right-of-way crossings that are excessively long or that have restricted space available outside the right-of-way.
- They must not affect State facilities or create a hazard to the traveling public. When placement is approved within access-controlled right-of-way, damaged State facilities must be replaced or repaired according to State Standard Specifications.
- Must have crushed-rock and sump areas to clear groundwater and water used to clean. They must be lined with filter fabric when groundwater is found and pumping is required.

EXCAVATION

In some locations Soil Stabilization may be required. It may become necessary at the direction of the Engineer to either pressure grout or freeze the soil area of the project to control water, to prevent loss of ground, to prevent settlement or displacement of an embankment. When required, a Registered Geotechnical Engineer shall prepare and stamp the plans determining the material and method for use.

In some projects masonry sections are installed, the amount of excavation of the tunnel should not exceed the amount needed for placement of a full masonry section after all lining is in place.

All excavated material shall be considered as unclassified material.

- In the event of any ground movement over or adjacent to construction, all work shall be suspended, except that which will assist in making the construction site secure and prevent any further additional movement of the ground.
- Excavation should not be advanced beyond the edge of the shield, except in rock.
- The geotechnical engineer/engineering geologist shall determine the allowable amount of tunnel length unsupported by bracing, based on the geotechnical investigation and design.
- All voids between the excavation and the liner shall be grouted after setting of ribs and lagging, if not expanded to full contact with the surrounding ground, as determined by the Safety Engineer.
- A log shall be maintained of all surrounding utilities and facilities.

DEWATERING

When ground water is anticipated, pumps of sufficient capacity to handle the flow shall be maintained at the site. Observation shall be maintained to detect any settlement, displacement or washing of fines into the pit, shaft or tunnel.

GROUTING

Grouting should be kept close to the heading (working front of tunnel). It may be required to add pea-gravel and fly ash to the grout. The pea-gravel would assist in consolidation and the filling of the voids, fly-ash works as a lubricant allowing the grout to free-flow.

- The use of grout stops may be utilized if necessary or if required by the Safety Engineer.
- Grouting shall be performed when ordered by the Safety Engineer.
- At no time shall progression of the tunnel exceed six feet (6') beyond the grouting of the exterior void.

© 2018 California Department of Transportation. All Rights Reserved.

- Pressure on the grouting gauge should not exceed the capacity of the lining, sufficient to fill all voids.
- A gauge shall be provided which will accurately indicate working pressure and shall be monitored constantly during grouting procedures.
- Grouting shall start at the lowest point and proceed upwards simultaneously on alternating sides.
- When grouting is complete at that location a threaded plug shall be installed into the coupling.

MATERIALS

"Notice of Materials to be used" (form CEM-3101) is required.

- The manufacturer shall provide a Certificate of Compliance, to ensure tensile and yield strengths.
- Steel lagging may consist of channel, liner plate or corrugated metal.
- Steel lagging thickness shall be designed on strength based upon the geotechnical investigation, soil analysis, and loading.
- Wood lagging thickness shall be designed on strength based upon the geotechnical investigation, soil analysis, loading. Generally wooden lags common size is three-inches by six-inches (3"x 6"), and the length is cut according to the spacing of the ribs.
- When the geotechnical investigation has determined that silts and fine sands exist, that may flow under pressure, all liner plates shall include a neoprene gasket adhered to each flange face.
- Ensure Manufacturer's Specification Data Sheets (MSDS) are provided stipulating recommended:
  - Specifications of steel spreaders (spacing, tolerances).
  - Specifications of steel rib (section lengths, spacing, etc.)

PROJECT OWNER'S/PERMITTEE'S RESPONSIBILITIES

The project owner/permittee is responsible for providing:

A full-time Safety Engineer or Safety Representative, and proof of certification is required, either by submittal on "Certification of Structural Experience" (form TR-0133) or State Certification.

Cal/OSHA requires persons performing the duties of gas tester or safety representative to be certified by passing a written and an oral examination administered by the M&T Unit. CCR 8406(f), (h)

- Project drawings and specifications, calculations and details stamped by a Registered Structural Engineer, or a Registered Civil Engineer, with a minimum of five (5) years' experience in sub-structural design of tunnels.
- A geotechnical investigation by a licensed geotechnical engineer to determine the following;
- Storm Water Pollution Prevention Plan (SWPPP) or Water Pollution Control Plan (WPCP).
- De-Watering Plan, if needed.
- Ground water information
- Boring and soil analysis logs, location plan of borings, cross sections, subsurface strata, fill and ground water elevations;
  - Particle size distribution (particularly percent rock and cobble),
  - Cohesion index, internal angle of friction, and soil classification,
  - Plastic and liquid limits (clays), expansion index (clays), soil density, and penetration tests,
  - Rock strength, rock joint fracture and orientation, water table levels, and soil permeability,
  - Areas of suspected and known contamination should also be noted and characterized.
- The soil investigation shall also determine the presence of rock, cobbles, and/or boulders, and the following;
  - Depth and extent of rock

© 2018 California Department of Transportation. All Rights Reserved.

- Rock type
- Rock strength
- Rock joint/fracture spacing
- Hardness
- RQD
- Estimated range of sizes & frequency of occurrence of cobbles and boulders.

CONTRACTOR'S RESPONSIBILITIES

The contractor is responsible for providing:

- Tunnel project construction plans and specifications, calculations and details, method of construction, to include the adequacy of the shield and liner material stamped by a Registered Structural Engineer, or a Registered Civil Engineer, with a minimum of five (5) years' experience in sub-structural design of tunnels.
- "Notice of Materials to be used" (form CEM-3101).
- Method of construction plan.
- A Licensed Surveyor.
- Proof of rib expanders and/or liner supports.
- Working schedule of the project.
- Contingency plan for dealing with ground loss work.
- Shaft; soil stability at portals and ground improvement plan.
- Dewatering plans for entry and exit shafts/pits, if needed.
- Installation and monitoring of SWPPP or WPCP facilities and conditions.
- Shoring design for entry and exit shafts/pits.
- Survey control plan: lasers, laser mounting, laser checking.
- Ground surface settlement monuments and subsurface settlement monuments monitoring program plan.
    - Buried points

© 2018 California Department of Transportation. All Rights Reserved.

ENCASEMENT REQUIREMENTS

1. Encasement requirements are discussed in Section 603.3C of the Encroachment Permits Manual.
2. The minimum wall thickness required for steel encasements is shown in Table 6.8 of the Encroachment Permits Manual.
3. Encasement ends shall be plugged with ungrouted bricks or other suitable material approved by the Caltrans' representative.
4. The Caltrans' representative may require the permittee to pressure grout, filling any voids generated during the permitted work. Grouting shall be at the expense of the permittee. Grout holes when placed inside the of the pipe, generally on diameters of 36” or greater, shall be on 8' centers, longitudinally and offset 22 degrees from vertical, and staggered to the left and right of the top longitudinal axis of the pipe. Grout pressure shall not exceed five-(5) psig (34.5 kPa) for a duration sufficient to fill all voids.
5. There is a spacing requirement when placement of multiple encasements is requested. The distance between multiple encasements shall be the greater of either 24” or twice that of the diameter of the larger pipe being installed.
6. Wing cutters when used shall only add a maximum of 1" in diameter to the outside diameter of the encasement pipe. Voids in excess of the Standard Specifications shall be grouted.
7. A band welded to the leading edge of the encasement pipe should be placed square to the alignment and not on the bottom edge of pipe. A flared lead section on bores over 100' shall not be permitted.
8. The length of the auger strand shall be equal to that of the section of encasement pipe.

© 2018 California Department of Transportation. All Rights Reserved.

BORE & JACK

Utility installations placed by Bore & Jack shall be monitored to ensure that the integrity of the existing roadway elevations are maintained. When the encasement is also to serve as the carrier facility for hazardous materials, the use of another trenchless installation is recommended. Potential damage could occur during the jacking process, rendering the use of that facility as the carrier.

BORE AND RECEIVING PITS

Requirements:

1. Must be located as far from the traveled way as feasible. At minimum, must be located 10 feet from the edge of pavement in rural areas, or at least 5 feet beyond the concrete curb and gutter or AC dike in urban areas, or at least 5 feet beyond the toe of slope of embankments.
2. Must be located outside of access-controlled right-of-way. Any deviations for direct crossings that are excessively long, or there is restricted space available for placement, outside of the right-of-way require an approved encroachment policy exception. Those portions of the installation not placed by Bore & Jack must be encased by the open trench method.
3. Must be protected by placement of 6-foot chain link fence or Type-K barrier around them.
4. Must be shored in accordance to Cal-OSHA requirements. Shoring of pits located within 15 feet of lanes within State highway right-of-way must not extend more than 36 inches in height above the pavement grade, unless authorized by a Caltrans' representative.
5. Reflectors must be affixed to the shoring on all sides facing traffic.
6. Pits must not affect any State facilities, or create a hazard to the traveling public. Damaged State facilities must be replaced in-kind or repaired to their original state.
7. All pits should have crushed-rock and sump areas to clear groundwater and water used to clean the casings. Pits must be lined with filter fabric when groundwater is found and pumping is required.
8. Temporary Type-K railing must be placed at a 10:1 taper or as otherwise directed by the Caltrans' representative to maintain the integrity of the adjacent travel lane.

Any installation that is 30 inches in diameter or greater is defined as tunnel. See Section 518, and Table 5.29 - Permit Code TN for the requirements of such installations.

© 2018 California Department of Transportation. All Rights Reserved.

RECOMMENDED MINIMUM DEPTH OF COVER FOR HDD INSTALLATIONS

DIAMETER	DEPTH OF COVER
2 inches to 6 inches	4 feet
8 inches to 14 inches	6 feet
15 inches to 24 inches	10 feet
25 inches to 48 inches	15 feet

Upon completion of the work, the permittee shall provide an accurate as-built drawing of the installed pipe.

SOIL INVESTIGATIONS

The District Permit Engineer (DPE) should determine the extensiveness of the Soil Investigation to be performed based on the complexity of the HDD operation, or modify the guideline to fit the respective area.

A soil investigation is required, suitable for the proposed complexity of the installation to confirm ground conditions that will be encountered during the HDD operation. The HDD process is a continual and extensive soil analysis as the pilot bore is made encountering the varying soils and formations.

Projects less than 500' in length, where the product or casing is 8" or less in diameter:

A field soil sampling investigation to a depth of one foot below the proposed drilling.

a) Subsurface strata, fill, debris and material

Projects less than 800' in length, where the product or casing is 14" or less in diameter:

A field soil sampling investigation to a depth of one foot below the proposed drilling.

a) subsurface strata, fill, debris and material
b) particle size distribution (particularly percent gravel and cobble)

Projects where the product or casing is 16" or greater in diameter:

A geotechnical evaluation by a qualified soil engineer to determine the following.

a) subsurface strata, fill, debris and material,
b) particle size distribution (particularly percent gravel and cobble),
c) cohesion index, internal angle of friction, and soil classification,
d) plastic and liquid limits (clays), expansion index (clays), soil density
e) water table levels, and soil permeability,

Projects where the product or casing 24" or greater in diameter:

A geotechnical evaluation by a qualified soil engineer to determine the following.

a) subsurface strata, fill, debris and material
b) particle size distribution (particularly percent gravel and cobble)
c) cohesion index, internal angle of friction, and soil classification
d) plastic and liquid limits (clays), expansion index (clays), soil density, and penetration tests,
e) rock strength, rock joint fracture and orientation, water table levels, and soil permeability,
f) areas of suspected and known contamination should also be noted and characterized.

A borehole or test pit should be undertaken on both sides and in the median when conditions permit.

© 2018 California Department of Transportation. All Rights Reserved.

Additional boreholes or test pits should be considered if substantial variations in soil conditions are encountered in the soil analysis (the presence of gravel, cobble, and/or boulders).

Fluid jetting methods used as a means of cutting **should only be considered** where soils have a high cohesion such as stiff clays.

PRE-CONSTRUCTION & SITE EVALUATION

The following steps should be undertaken by the permittee/contractor to ensure safe and efficient construction with minimum interruption of normal, everyday activities at the site.

- Notify owners of subsurface utilities along and on either side of the proposed drill path of the impending work through USA alert (the one-call program). All utilities along and on either side of the proposed drill path are to be located.
- Obtain all necessary permits or authorizations to carry construction activities near or across all such buried obstructions.
- All utility crossings should be exposed using a hydro-excavation, hand excavation (potholing) or other approved method to confirm depth.
- Construction schedule should be arranged to minimize disruption (e.g. drilling under railroad beds, major highways, and/or river crossings).
- The proposed drill path should be determined and documented, including its horizontal and vertical alignments and the location of buried utilities and substructures along the path.

Walk the area prior to the commencement of the project and visually inspect potential sites. The following should be addressed:

- When on State R/W establish whether or not there is sufficient room at the site for: entrance and exit pits; HDD equipment and its safe unimpeded operation; support vehicles; fusion machines; stringing out the pipe to be pulled back in a single continuous operation.
- Establishing suitability of soil conditions for HDD operations. Subgrade soils consisting of large grain materials like gravel, cobble, and boulders make HDD difficult to use and may contribute to pipe damage.
- Check the site for evidence of substructures such as manhole covers, valve box covers, meter boxes, electrical transformers, conduits or drop lines from utility poles, and pavement patches. HDD may be a suitable method in areas where the substructure density is relatively high.

INSTALLATION REQUIREMENTS

During construction continuous monitoring and plotting of pilot drill progress shall be undertaken to ensure compliance with the proposed installation alignment and allow for appropriate course corrections to be undertaken that would minimize “dog legs” should the bore start to deviate from the intended bore path.

Monitoring shall be accomplished by manual plotting based on location and depth readings provided by the locating/tracking system or by computer generated bore logs which map the bore path based on information provided by the locating/tracking system. Readings or plot points shall be undertaken on every drill rod.

Excess drilling fluids shall be contained at entry and exit points until recycled or removed from the site. Entry and exit pits should be of sufficient size to contain the expected return of drilling fluids and soil cuttings.

The permittee shall ensure that all drilling fluids are disposed of in a manner acceptable to the appropriate

© 2018 California Department of Transportation. All Rights Reserved.

local, state, or federal regulatory agencies. When drilling in contaminated ground the drilling fluid shall be tested for contamination and disposed of appropriately. Restoration of damage to any highway or non-highway facility caused by escaping ("fracout") drilling fluid, or the directional drilling operation, shall be the responsibility of the permittee.

To minimize heaving during pullback, the pull back rate shall be determined which maximizes the removal of soil cuttings and minimizes compaction of the ground surrounding the borehole. The pullback rate shall also minimize overcutting of the borehole during the back reaming operation to ensure excessive voids are not created resulting in post installation settlement.

The permittee shall, prior to and upon completion of the directional drill, establish a Survey Grid Line and provide monitoring as outlined in their submitted detailed monitoring plan. Subsurface monitoring points shall be utilized to provide early indications of settlement as large voids may not materialize during drilling due to pavement bridging.

Should pavement heaving or settlement occur, sawcutting and replacement of the asphalt shall be the responsibility of the permittee.

To prevent future settlement should the drilling operation be unsuccessful the permittee shall ensure the backfill of any void(s) with grout or backfilled by other means.

PERMITTEE'S/CONTRACTOR'S RESPONSIBILITIES

The plans set submittal should contain the following information in support of the permit application.

1. Location of entry and exit point.
2. Equipment and pipe layout areas.
3. Proposed drill path alignment (both plan & profile view).
4. Location, elevations and proposed clearances of all utility crossings and structures.
5. Proposed Depth of cover.
6. **Soil analysis.
7. Product material (HDPE/steel), length, diameter-wall thickness, reamer diameter.
8. Detailed pipe calculations, confirming ability of product pipe to withstand installation loads and long term operational loads including H20.
9. Proposed composition of drilling fluid (based on soil analysis) viscosity and density.
10. Drilling fluid pumping capacity, pressures and flow rates proposed.
11. State right-of-way lines, property, and other utility right-of-way or easement lines.
12. Elevations.
13. Type of tracking method/system.
14. Survey Grid establishment for monitoring ground surface movement (settlement or heave) due to the drilling operation.

Note: *** May be waived by the District Permit Engineer on HDD jobs of less than 6" in diameter and on a transverse crossing less than 150' in length.*

ADDITIONAL PERMIT CONDITIONS SHALL BE SET FORTH IN THE SPECIAL PROVISIONS OF THE PERMIT.
LOCATING AND TRACKING

EFFECTIVE JANUARY 1, 2000, LOCATING AND TRACKING OF THE REAMER DURING THE BACK-REAMING PROCESS IS REQUIRED.

The illustration below shows a universal housing that will work with any drill-string on all HDD rigs.

© 2018 California Department of Transportation. All Rights Reserved.

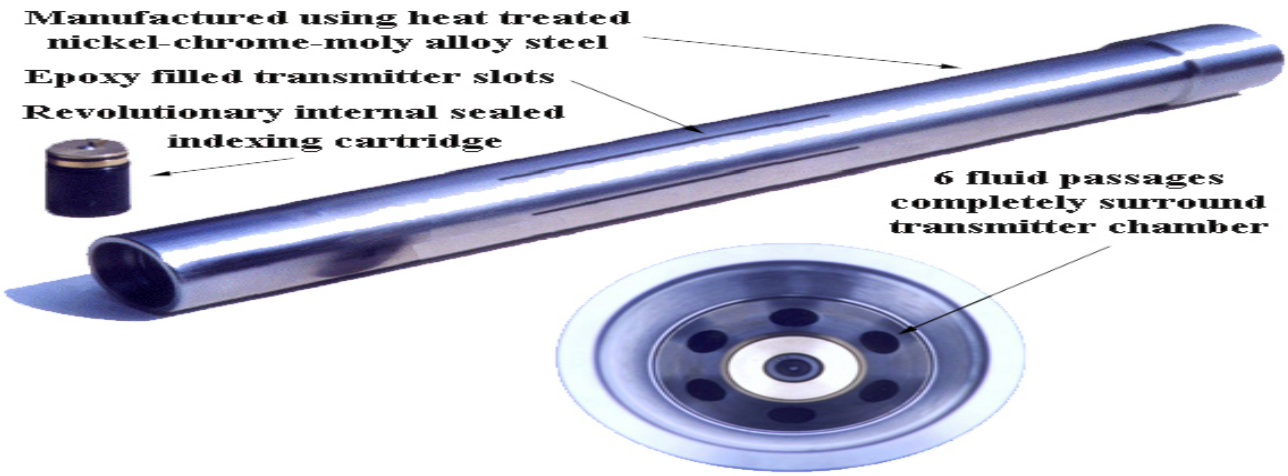

DRILLING FLUIDS MANAGEMENT PLAN

The following information should be provided as part of the drilling fluid management plan:

- Identify source of fresh water for mixing the drilling mud (Necessary approvals and permits are required for sources such as streams, rivers, ponds, or fire hydrants).
- Method of slurry containment.
- Method of recycling drilling fluid and spoils (if applicable).
- Method of transporting drilling fluids and spoils off site.

Drilling fluid pressures should not exceed that which can be supported by the overburden (soil) pressure.

Drilling fluids serve many functions, as follows:

- Removes cuttings from the bottom of the hole and transports them to the surface.
- Holds cuttings and weight material in suspension when circulation is interrupted.
- Releases sands and cuttings at the surface.
- Stabilizes the hole with an impermeable cake.
- Cools and lubricates the drill bit and drill string
- Controls subsurface pressures.
- Transmits hydraulic horsepower.
- Cools the locating transmitter sonde preventing burnout.

PREVIOUS EXPERIENCE

- The permittee's contractor should provide a list of projects completed by his company, location, project environment (e.g., urban work, river crossing), product diameter and length of installation.
- The permittee's contractor should provide a list of key personnel.

SAFETY

- Emergency procedures for inadvertently boring into a natural gas line, live power cable, water main, sewer lines, or a fiber-optic cable, which comply with applicable regulations.
- Emergency evacuation plan in case of an injury.

© 2018 California Department of Transportation. All Rights Reserved.

CONTINGENCY PLANS

The Contingency plan shall address the containment and removal, of an inadvertent return or spill (e.g., drilling fluids, and hydraulic fluids).

COMMUNICATION PLAN

The communication plan should address the following:

- The phone numbers for communication with owner or his representative on the site.
- Identification of all key personnel which will be responsible for ensuring that the communications plan is followed.

DRILLING OPERATIONS

The following paragraphs provide general remarks and rules of thumb related to the directional boring method, as well as specific details regarding various stages of the installation process.

- The drill path alignment should be as straight as possible to minimize the fractional resistance during pullback and maximize the length of the pipe that can be installed during a single pull.
- The radius of curvature is determined by the bending characteristics of the product line, and it is increasing with diameter.
- If a drill hole beneath a road must be abandoned, the hole should be backfilled with grout or bentonite to prevent future subsidence.

EQUIPMENT SETUP AND SITE LAYOUT

- Sufficient space is required on the rig side to safely set up and operate the equipment.
- Sufficient space should be allocated to fabricate the product pipeline into one string, thus enabling the pull back to be conducted in a single continuous operation.

DRILLING AND BACK-REAMING

- Drilling mud shall be used during drilling and back reaming operations. Using exclusively water may cause collapse of the borehole in unconsolidated soils, while in clays, the use of water may cause swelling and subsequent jamming of the product.
- Heaving may occur when attempting to back ream too large of a hole. This can be avoided by using several pre-reams to gradually enlarge the hole to the desired diameter.
- The conduit must be sealed at both ends with a cap or a plug to prevent water, drilling fluids and other foreign materials from entering the pipe as it is being pulled back.
- Pipe rollers, skates or other protective devices should be used to prevent damage to the pipe from the edges of the pit during pullback, eliminate ground drag or reduce pulling force and subsequently reduce the stress on the product.
- The drilling mud in the annular region should not be removed after installation, but permitted to solidify and provide support for the pipe and neighboring soil.

BREAK-AWAY PULLING HEAD

Some utility companies require the use of breakaway swivels to limit the amount of force used when pulling HDPE products.

© 2018 California Department of Transportation. All Rights Reserved.

PROTECTIVE COATINGS

In an HDD installation, the product pipe may be exposed to extra abrasion during pullback. When installing a steel pipe, a form of coating which provides a corrosion barrier as well as an abrasion barrier is recommended during the operation, the coating should be well bonded and have a hard smooth surface to resist soil stresses and reduce friction, respectively. A recommended type of coating for steel pipes is mill applied Fusion Bonded Epoxy.

DRILLING FLUID - COLLECTION AND DISPOSAL PRACTICES

Drilling fluids, additives and their Material Safety Data Sheets (MSDS) shall be identified within the contractor's submittal permit package.

- Excess drilling fluids shall be contained within a lined pit or containment pound, until removed from the site.
- When an area of contaminated ground is encountered, the slurry shall be tested for contamination and disposed of in a manner, which meets Local, State and/or Federal requirements.
- Precautions shall be taken to keep drilling fluids out of the streets, manholes, sanitary and storm sewers, and other drainage systems, including streams and rivers.
- The contractor shall make all diligent efforts to minimize the amount of drilling fluids and cuttings spilled during the drilling operation, and shall provide complete clean-up of all drilling mud overflows or spills.

SITE RESTORATION AND POST CONSTRUCTION EVALUATION

All surfaces affected by the work shall be restored to their pre-existing conditions.

The permittee/contractor shall provide a set of as-built drawings to include both alignment and profile.

Drawings should be constructed from actual field readings. Raw data shall be submitted as part of the "As-Built" document. The contractor shall stipulate the tracking method used to ensure the data was captured.

© 2018 California Department of Transportation. All Rights Reserved.

MICRO-TUNNELING

Micro-tunneling is a hybrid of the tunneling industry (miniaturization of tunnel boring machines) and the pipeline industry where pipe jacking has been used for more than 100 years. It is a special construction method suitable for many conditions where open cut construction methods are not cost effective, too disruptive, or not physically possible.

MICRO-TUNNELING PLAN SET SUBMITTAL

The plan set submittal shall consist of two separate submittals, by the Owner of the installation and by the owner's contractor.

The submittal by the owning agency shall contain the following plans and information:

1. Drive lengths
2. Proposed depth
3. Shaft; jacking and receiving shafts, manhole construction, shaft backfill, and shoring removal;
   - Type of shaft;
     a) Sheet Pile
     b) Beams and Lagging
     c) Trench Box
     d) Auger Drilled and Lined
     e) Caissons
4. Intermediate jacking stations;
   - Number of Stations;
     a) Required by Specifications
     b) On site
5. Geotechnical; including ground water information
   - Geotechnical evaluation by a qualified soil engineer to determine the following;
     a) Boring logs & plan locations of borings and cross sections, Subsurface strata, fill and ground water elevations
     b) Particle size distribution (particularly percent rock and cobble),
     c) Cohesion indexes, internal angle of friction, and soil classification,
     d) Plastic and liquid limits (clays), expansion index (clays), soil density, and penetration tests,
     e) Rock strength; rock joint fracture and orientation, water table levels, and soil permeability,
     e) Areas of suspected and known contamination should also be noted and characterized.
   - Should the soil investigation determine the presence of rock, cobbles, and/or boulders, determination of the following information would be required;
     a) Depth and extent of rock
     b) Rock type
     c) Rock strength
     d) Rock joint/fracture spacing
     e) Hardness
     f) RQD
     g) Estimated range of sizes & frequency of occurrence of cobbles and boulders.

Boreholes or test pits for road crossings shall be undertaken on both sides with one or more additional boreholes or test pits in the median where conditions permit. Additional boreholes or test pits should be considered if substantial variation in soil conditions are encountered. Where a proposed installation parallels an existing road, boreholes or test pits should be undertaken at approximately 250 to 410 feet intervals.

© 2018 California Department of Transportation. All Rights Reserved.

CONTRACTOR'S SUBMITTAL

Shall contain the following plans and information:

1. Shaft; soil stability at portals and ground improvement.
2. Dewatering plans for jacking and receiving shafts, if any.
3. Shoring design for jacking and receiving shafts.
4. Survey control plan: lasers, laser mounting, laser checking.
5. Ground surface settlement monuments and subsurface settlement monuments monitoring program plan.
   - Buried points
     a) Rebar points, or
     b) MPBX (Multi-point borehole extensometers)
6. Recycling information; slurry mix and polymer additives, slurry separation plant type, and spoils disposal;
     a) Removal of slurry in dump trucks.
     b) Removal of slurry in tankers.
     c) Settlement ponds.
     d) Muck piles on site.
7. Contingency plan information;
     a) Ground improvement plans when required at portals and/or behind thrust block/reaction wall due to weak and unstable soil conditions.
     b) Obstruction removal through emergency (911) shafts or other means.
     c) Mechanical breakdowns and recovery of the MTBM through 911 shafts or other means.
     d) Control of hydrofracture and slurry loss.
     e) Remediation of loss of ground and excessive ground surface settlement.

© 2018 California Department of Transportation. All Rights Reserved.

PIPE RAMMING

Pipe Ramming pit requirements are identical to those for Bore & Jack.

Establishment of a survey-grid line is required.

Before any project begins, exploration bore-holes and a complete geotechnical investigation shall be conducted to determine possible difficulties to determine the drilling trajectory.

The casing shall be rammed open ended, except when the diameter is 6” or smaller. Pipes 6” or smaller may be rammed open ended or closed.

A soil shoe may be installed on the leading edge of the casing, either by fabrication on site or obtained from the manufacturer. A soil shoe shall not be utilized on those installations at depths or 18” or less from the surface.

Lubrication shall only be utilized to reduce friction and increase production. The amount of lubrication directed to the outside of the pipe shall only be of a sufficient amount required to fill the void between the outside of the pipe and soil, as created by the soil shoe.

Lubrication to the inside of the casing shall only be an amount adequate to assist in spoil removal when the ram is completed.

Welding of the casing at joints shall be as per the manufacturer’s recommendations.

The use of straps at each joint on pipe diameters of 12” or larger is required as is the use of the manufacturer’s specified welding wire or rod.

Spoil removal for rammed encasements of 30” in diameter or less, may utilize pressurized air or water.

Air pressure shall not exceed 150 psi and water pressure shall not exceed 300 psi.

Encasements larger than 30” in diameter shall have the spoils removed by other means than by pressurizing of the pipe, such as, manual, auguring, vacuum, washing or other means.

The Receiving Pit shall be steel plated entirely when the spoils are to be removed from within the encasement by means of air or water pressurized methods.

© 2018 California Department of Transportation. All Rights Reserved.

PIPE BURSTING

Pipe Bursting operations generally are only performed by the owning utility when they have exceeded the operating capacity of their existing facilities. In most cases pipe bursting allows the utility owners the advantage of upgrading their existing facilities by up to 50%.

On installations of diameters 12" or greater it is necessary to establish a survey-grid line and establish the existing elevation points over the existing area of installation.

A soil analysis should be required and review of the information to identify any locations of difficulty, density, water table, changes in soil formation that could present or create greater friction resistance.

Request information of the proposed project as to:

1. The ratio of the proposed upgrade to determine difficulty, generally up to 25% increase in diameter is common. An increase of 25% - 50% is considered challenging, and an increase of 50% or greater is considered experimental.

2. The existing depth of cover, "rule of thumb" depth of cover should be at least 10X the difference in the upgrade of the existing diameter to be burst.

3. Whether or not the existing line has been viewed by video, do not allow line to be burst blind.

4. Is this proposed line straight or are there bends in the line.

5. If bends are existing in the line, the location of the bend will have to be excavated and new pits re-established at those locations.

6. Require that the contractor provide a list of equipment to be on site to handle an emergency, in the event that bypass pumping is required to maintain the existing service in the event of a problem.

7. As to what method will be utilized (static, pneumatic, burst and jack, or hydraulic).

© 2018 California Department of Transportation. All Rights Reserved.

Appendix F – Miscellaneous

Table of Contents

Sample letter to City or County requesting consent for Visibility Improvement F-1

Permit File & Plans Set Microfilming Guidelines F-2

Minimum clearances of wires above railroads, thoroughfares, buildings, etc. (Excerpts from the California Public Utilities Commission's General Order 95, Rules 36, 37 and Table 1)

http://www.cpuc.ca.gov/gos/GO95/go_95_section_3.html

© 2018 California Department of Transportation. All Rights Reserved.

DEPARTMENT OF TRANSPORTATION
DISTRICT XX, ENCROACHMENT PERMITS OFFICE
???? $$$$ STREET
P.O. BOX 00000, MS-XX
XXXXXXXXXX, CA 90000-0000
PHONE (000) 555-9876
FAX (000) 555-9876
TTY 711
www.dot.ca.gov

Making Conservation a California Way of Life.

<Date>

<Mr./Ms./The Honorable Name>
<Title>
<Organization>
<Address>
<City, ST ZIP>

Dear <Mr./Ms./City/County Manager>:

I am writing to you in behalf of a visibility improvement requester regarding a matter you may be interested in.

Pursuant to Streets and Highways Code Section 670, when proposed encroachment work for the destruction, removal or topping of a tree (except if dead or diseased) exceeds $500, then the consent of the city or county, in which the tree is located, is required before permit issuance. In addition, a 30-day time limit to respond from the receipt of this letter is also required and failure to do so shall deem the consent from the city or county.

Please complete the bottom portion of the enclosed Visibility Improvement Request and return it to the Caltrans District Permit Office.

Sincerely,

NAME
District Permit Engineer

Enclosure

© 2018 California Department of Transportation. All Rights Reserved.

In addition to the requirements discussed in Section 206.4A "Closing out permit files", the following steps must be taken when preparing permit files and plan sets for microfilming:

PERMIT FILES:

The first page of the permit file must be a completed "EP – Microfilming Slipsheet" (form TR-0155). This form is available at:

http://cefs2.dot.ca.gov/v2Forms/servlet/FormRenderer?frmid=TR0155

Forms can be typed or handwritten as long as they are legible. If handwritten, print using black or blue ink.

Smaller size plan sets (8 1/2" x 11" and 11" x 17") must be included with the permit file (preferably at the end) so they are microfilmed together rather than in separate aperture cards. This helps reduce costs, space and research time since all of the information is available within a single microfilm roll.

Procedures for larger size plan sets are addressed below.

The "Permit Transfer Sheet" (form ADM-0163) is an accountability record used by both the District Office and the Microfilming contractor to track the location of any particular permit file while it is in the process of being microfilmed. This form is available at:

http://cefs2.dot.ca.gov/v2Forms/servlet/FormRenderer?frmid=ADM0163

A copy of the transfer sheet must be placed inside the box (on top of the permit files).

A second copy of the transfer sheet must also be taped to the outside of the box. This allows us to quickly view the box's contents without opening it if a file needs to be located.

Keep a copy of the transfer sheet for your records.

If the documents do not completely fill up the box, add packing material to prevent the contents from shifting during transit.

LARGER SIZE PLAN SETS:

Larger size plans sets must be packaged separately from the permit files so they are converted into aperture cards.

Use the following guide to place the information stamp (permit #, plan set #, etc.) on each page of the plan set parallel to the bottom of the page:

1. First choice - lower right quarter
2. Second choice- upper right quarter
3. Third choice - upper left quarter
4. Fourth choice- lower left quarter

If the background of the page is a dark color, tape a post-it or similar label on the page and then stamp the label.

Be sure that plan sets are placed facing up.

Do not place written information on the back of the plan sets.

© 2018 California Department of Transportation. All Rights Reserved.

Important notes must be taped onto the plan set. These additional pieces of paper are to become part of the plan set. Place and tape down any applicable notes over an open space on the plan set.

Remove all staples from plan sets with multiple sheets. Plan sheets must be numbered and placed in the correct sequential order.

Do not break up a plan set between boxes.
Consecutively number each box within the current calendar year.

Format:
2 digit District number – Box number – last 2 digits of the current calendar year.

Example:

- The first box is packaged by District 02 in 2017 this box is numbered 02-01-17.
- Two months later, the second box is packaged and numbered 02-02-17.
- Then District 02 does not package another box until 2018.
  Since this is the first box for 2018, this box is numbered 02-01-18.

Arrange the plan sets in ascending order by year and plan set number within the year.

The oldest plan set with lowest plan set number will appear first followed by the next, etc.

Example:

PERMIT NUMBER	**YEAR**	**PLAN SET #**	**TOTAL PAGES**
0217 – 6-CD - 0005	2017	17	1
0217 – N-DD - 0180	2017	30	1
0218 – 6-MC - 0161	2018	31	1
0219 – 6-UB - 0068	2019	35	2
0219 – N-UE - 0070	2019	36	3

The district must list the plan sets in ASCENDING YEAR and PLAN SET # as the plans also appear in the box.

The first plan set listed on the sheet is the plan set on top in the box, etc.

A copy of the transfer sheet must be placed inside the box (on top of the plan sets).

A second copy of the transfer sheet must also be taped to the outside of the box. This allows us to quickly view the box's contents without opening it if a plan set needs to be located.

Keep a copy of the transfer sheet for your records.

If the documents do not completely fill up the box, add packing material to prevent the contents from shifting during transit.

© 2018 California Department of Transportation. All Rights Reserved.

Appendix G – DISTRICT ENCROACHMENT PERMIT OFFICES

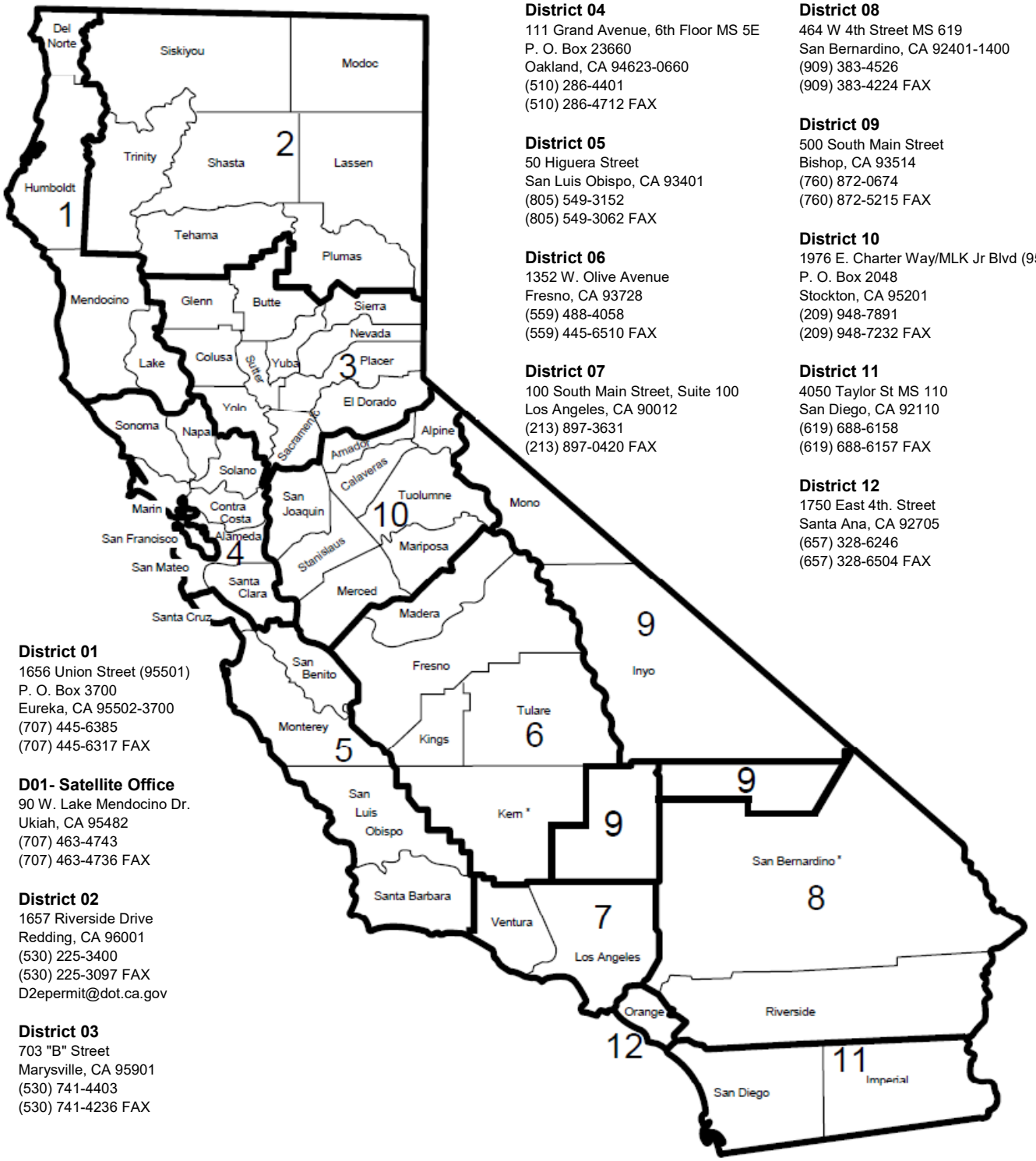

District 01
1656 Union Street (95501)
P. O. Box 3700
Eureka, CA 95502-3700
(707) 445-6385
(707) 445-6317 FAX

D01- Satellite Office
90 W. Lake Mendocino Dr.
Ukiah, CA 95482
(707) 463-4743
(707) 463-4736 FAX

District 02
1657 Riverside Drive
Redding, CA 96001
(530) 225-3400
(530) 225-3097 FAX
D2epermit@dot.ca.gov

District 03
703 "B" Street
Marysville, CA 95901
(530) 741-4403
(530) 741-4236 FAX

District 04
111 Grand Avenue, 6th Floor MS 5E
P. O. Box 23660
Oakland, CA 94623-0660
(510) 286-4401
(510) 286-4712 FAX

District 05
50 Higuera Street
San Luis Obispo, CA 93401
(805) 549-3152
(805) 549-3062 FAX

District 06
1352 W. Olive Avenue
Fresno, CA 93728
(559) 488-4058
(559) 445-6510 FAX

District 07
100 South Main Street, Suite 100
Los Angeles, CA 90012
(213) 897-3631
(213) 897-0420 FAX

District 08
464 W 4th Street MS 619
San Bernardino, CA 92401-1400
(909) 383-4526
(909) 383-4224 FAX

District 09
500 South Main Street
Bishop, CA 93514
(760) 872-0674
(760) 872-5215 FAX

District 10
1976 E. Charter Way/MLK Jr Blvd (95205)
P. O. Box 2048
Stockton, CA 95201
(209) 948-7891
(209) 948-7232 FAX

District 11
4050 Taylor St MS 110
San Diego, CA 92110
(619) 688-6158
(619) 688-6157 FAX

District 12
1750 East 4th. Street
Santa Ana, CA 92705
(657) 328-6246
(657) 328-6504 FAX

* Eastern Kern County and Northern San Bernardino County fall under D09's jurisdiction. Please contact the office if you have any questions.

© 2018 California Department of Transportation. All Rights Reserved.

Appendix H – References

Table of Contents

Encroachment Permit Fees.....H-1

The following Temporary Traffic Control Systems ("T" sheets) are available at:

https://dot.ca.gov/programs/design/ccs-standard-plans-and-standard-specifications

- Traffic Control System for Lane Closure on Freeways and Expressways, T-9
- Traffic Control System for Lane Closure on Freeways and Expressways, T-10
- Traffic Control System for Lane and Complete Closure on Freeways and Expressways, T-10A
- Traffic Control System for Lane Closure on Multilane Conventional Highways, T-11
- Traffic Control System for Lane Closure on Multilane Conventional Highways, T-12
- Traffic Control System for Lane Closure on Two Lane Conventional Highways, T-13
- Traffic Control System for Ramp Closure, T-14

Uncased High Pressure Natural Gas Pipelines Crossings (Exception to Policy) H-2

Controlled Low Strength Material H-5

The following documents are available for purchase at: https://store.transportation.org/

- AASHTO's "Roadside Design Guide" 4th Edition, Chapter 11 "Erecting Mailboxes on Streets and Highways"

© 2018 California Department of Transportation. All Rights Reserved.

ENCROACHMENT PERMIT FEE SCHEDULE

TR-0166 (REV. 10/2019)

Code	Permit Type	Deposit Required	Review	Inspection
	General			
AD	Advertising displays, marquees, arcades, awnings	6	AX	AX
AH	Adopt-A-Highway	EXEMPT	EXEMPT	EXEMPT
AP	Transportation Art Program	EXEMPT	EXEMPT	EXEMPT
AS	Airspace Development	EXEMPT	EXEMPT	AX
BR	Banners, decorations	6	AX	AX
BS	Bus shelters & benches	EXEMPT	EXEMPT	AX
CC	City/County issued permits	---	---	---
CD	Commercial Development	6	AX	AX
CN	Chain Installer	2 + vest		
CS	Curb/gutter/sidewalk	6	AX	AX
CU	Coupon Racks & Newspaper vending machines at SRRAs	6	AX	AX
CU	Adopt-A-Kiosk (TSIC)	EXEMPT	EXEMPT	EXEMPT
CU	SRRA Vending Machines	EXEMPT	EXEMPT	EXEMPT
DP	Double Permit	6	2	AX, (#1)
DP	Double Permit when contractor makes project plan submittal	6	AX	AX, (#1)
	Cooperative Agreements	AD	AD	AD
FN	Fence – New/Modified	6	AX	AX
GM	Gateway Monument	EXEMPT	EXEMPT	EXEMPT
ID	Community Identification	EXEMPT	EXEMPT	EXEMPT
MB	Mailbox	EXEMPT	EXEMPT	EXEMPT
MC	Contractor's yard and plant, Grading, mowing grass, material removal, structures, parking meters, tieback, widening, freeway & conventional striping	6	AX	AX
MM	Blue Star and Memorial Markers	EXEMPT	EXEMPT	EXEMPT
MW	Monitoring Wells	6	AX	AX
OA	Visibility Improvement Request	6	AX	AX
OP	Oversight Projects	AD	AD	AD
RX	Railroad Crossing	EXEMPT	EXEMPT	EXEMPT
SC	State Contract – Early entry	1	1	0
SI	Signs	6	AX	AX
SV	Land, archeological, traffic counts, research project, accident reconstruction, literature distribution	6	AX	AX
TN	Tunneling (> 30 inches)	6	AX	AX
WL	Wall	6	AX	AX
	Drainage			
DM	Minor Drainage	6	AX	AX
DD	Major Drainage	6	AX	AX

Code	Permit Type	Deposit Required	Review	Inspection
	Filming			
FF	Filming in Facilities	0	AX	AX
FI	Intermittent Traffic control	0	2	0
FL	Traffic Control	0	AX	AX
FO	No moving traffic	0	1	0
FR	Film rider	0	AX	AX
FS	Special	0	AX	AX
LM	Maintenance	6	AX	AX
LT	Tree Trim/removal	6	AX	AX
	Rider			
RD	Caltrans initiated rider	EXEMPT	EXEMPT	EXEMPT
RT	Time extension rider	2	2	AX
RW	Modify work rider	6	AX	AX
	Road approach / driveway			
RC	Commercial	6	AX	AX
RM	Resurface, reconstruct, reissue	6	1	AX
RP	Public/Private	6	AX	AX
RS	Single family/agricultural	6	AX	AX
	Special event			
SE	Special Event	6	AX	AX
	Signals / lighting			
SN	Signal – new/modify	6	AX	AX
TK	Traffic Control, signals, lighting	6	AX	AX
	Annual / bi-annual			
---	All permits	DEF	2	AX
	Utilities			
BB	Broadband	DEF	AX	AX
UB	Utilities in or on a bridge	DEF	AX	AX
UC	Conventional Aerial	DEF	AX	AX
UE	Annual utility & service	DEF	AX	AX
UF	Freeway Aerial	DEF	AX	AX
UJ	Transverse Bore & Jack	DEF	AX	AX
UL	Underground Longitudinal Minor	DEF	AX	AX
UR	State required relocation	EXEMPT	EXEMPT	EXEMPT
US	Service, pothole, modify	DEF	AX	AX
UT	Open cut road	DEF	AX	AX

Notes:

MOST PERMITS REQUIRE A 6 HOUR MINIMUM DEPOSIT UNLESS EXEMPT OR NOTED OTHERWISE

(#1) Inspection time will be charged to only one permit, the parent permit or the double permit, not both

AD – As specified in the agreement and/or the "Encroachment Permit Administrative Route Slip" (form TR-0154)

AX – Actual expenditures shall be collected

DEF – Deferred Billing (Utilities only)

© 2018 California Department of Transportation. All Rights Reserved.

State of California

Business, Transportation and Housing Agency

Memorandum

To: ALL DISTRICT DIRECTORS

Attention Deputy District Directors
District Permit Engineers

Date: November 9, 1994

File No.: 617
Encroachment Permits

From: DEPARTMENT OF TRANSPORTATION
DIRECTOR'S OFFICE

Subject: Exception to Policy - Uncased High-pressure Natural Gas Pipeline Crossings

Encroachment Permits Manual Section 623, entitled "Transverse Boring and Jacking", requires that all new pipeline installations six inches and larger that cross a State highway must be placed within a casing that is bored and jacked under the highway.

Having examined the pros and cons of cased versus uncased natural gas transmission pipelines, Caltrans will now allow uncased natural gas pipeline crossings in specific circumstances. Because our primary concerns are for public safety, the integrity of the highway facility and the mechanical protection of the pipeline itself, it is necessary to limit requests for transverse natural gas transmission line crossings without casings to locations where the following conditions are met:

1) The pipeline owner agrees that the crossing will be designed for construction in accordance with the Code of Federal Regulations, Title 49, Part 192, and/or the California Public Utilities Commission General Orders No. 112-D with respect to natural gas pipelines. The crossing design shall be comprehensive in all respects including but not limited to material specification, pipe wall thickness determination, coating selection, and cathodic protection. Soil conditions at each site shall be analyzed for characteristics that may prove harmful to the protective pipe coating. This analysis shall be used by the pipeline owner in selecting a protective pipe coating sufficient to withstand the potential for gouging or peeling during the boring and jacking operation, or other methods approved by Caltrans. The final condition of the coating will be determined by the pipeline owner through monitoring of the boring and jacking operation, visually inspecting the exiting initial pipe segment, and electrical testing by an engineer or technician with expertise in cathodic protection. The test data shall be noted on the as-built drawings. Remedial action will be taken if the condition of the coating is such that cathodic protection is not practical.

2) The minimum depth of cover within State highway right of way, from the final ground line (finished grade or original ground) to the top of the proposed gas carrier pipeline, is two and one-quarter meters (7' - 6"). If the location is such that it is not practical to achieve the above depth of cover, then an engineered protective cover (such as a reinforced concrete structure) may be provided outside of pavement areas in lieu of casing. At

© 2018 California Department of Transportation. All Rights Reserved.

no time shall the minimum depth of cover be less than one and one-tenth meters (42").

3) The permit specifies that the uncased gas carrier pipeline shall, as a minimum, be designed for a Class 3 Location (Code of Federal Regulations referenced above) for hard surfaced roads, highways, public streets, and railroads. (See attached *Excerpts From Code of Federal Regulations, Design Factor to be Used for Natural Gas Pipelines*.)

4) The existence of the crossing is adequately identified by signing at the right-of-way line, with at least one identifying sign which is visible from the roadway in each direction of travel.

5) The pipeline owner agrees to provide as-built drawings at completion of the pipeline crossing, with a letter certifying that the pipeline was installed properly and in accordance with the permit plans (including approved changes to the permit plans), and meets industry and regulatory standards for such installation.

6) All other applicable requirements of Section 623 of the Encroachment Permits Manual are satisfied.

All permit applications requesting installations of such uncased natural gas pipeline crossings six inches or larger in diameter and meeting the above requirements may be approved by the highway district. All permit applications for uncased pipeline crossings deviating from the above requirements shall be submitted to the Chief of the Office of Project Planning and Design for exception approval in the usual manner.

R. P. WEAVER
Deputy Director
Project Development

JCHaggard:jl
bcc:
DHBenjamin
WPSmith
GPeck
JVan Berkel
DLeFevre
JHaggard
DParks - NTM&R
AGugino - Structures Maint.
WMorehead - Structures
PCotter - Structures
DHBenjamin's Pend
WPSmith's Pend
Director's Office Chron
Director's Office Read
OPPD File

Attachment

© 2018 California Department of Transportation. All Rights Reserved.

EXCERPTS FROM CODE OF FEDERAL REGULATIONS,

DESIGN FACTOR TO BE USED FOR NATURAL GAS PIPELINES

In the design of steel natural gas pipelines the Minimum Yield Strength for the grade of steel used is reduced by a Design Factor (F). This Design Factor is determined by the type of road being crossed by the pipeline and a Class Location established by Code of Federal Regulations, Title 49, Part 192 (Office of the Federal Register, 1990)

The Class Location depends on the occupancy of buildings or activities within an area that extends 660 feet (200 m) either side of the pipeline centerline for a continuous 1 mile (1.6 km) segment of the pipeline. There are four Class Locations as follows:

Class 1. Location that has 10 or less buildings intended for human occupancy.

Class 2. Location that has more than 10 but less than 46 buildings intended for human occupancy.

Class 3. a) Any location that has 46 or more buildings intended for human occupancy ; or

b) Area where pipeline lies less than 300 feet (91 m) of either a building or a small well-defined outside area (such as a playground, recreation area, outdoor theater, or other place of public assembly) that is occupied by 20 or more persons on at least 5 days a week fr 10 weeks in any 12-month period. (The days or weeks need not to consecutive).

Class 4. Location where buildings of four or more stories are prevalent.

The design factor used for a specific Class Location also depends on the kind of road involved as indicated on the following Table.

Design Factor (F)

	Class Location			
Kind of Thoroughfare	1	2	3	4
Privately owned roads	0.72	0.60	0.50	0.40
Unimproved public roads	0.60	0.60	0.50	0.40
Hard surfaced roads, highways public streets, and railroads	0.60	0.50	0.50	0.40

Example: A pipe made of X42 grade of steel which has a Minimum Yield Strength (MYS) of 42,000 psi used in a Class 4 location at a hard surface road crossing would be designed using a reduced Minimum Yield Strength, by applying a Design Factor of 0.4, of 16,800 psi.

© 2018 California Department of Transportation. All Rights Reserved.

CONTROLLED LOW STRENGTH MATERIAL

Controlled low strength material (CLSM) shall consist of a workable mixture of aggregate, cementitious materials, and water. Controlled low strength material shall conform to the provisions in Section 19-3, "Structure Excavation and Backfill," of the Standard Specifications and these special provisions.

At the option of the Contractor, controlled low strength material may be used as structural backfill for pipe culverts within trenches.

When controlled low strength material is used for structure backfill, the width of the excavation shown on the plans may be reduced so that the clear distance between the outside of the pipe and the side of the excavation, on each side of the pipe, is a minimum of 6 inches except that 12 inches shall be required for pipes 42 inches and greater in diameter or span when height of cover is greater than 20 feet. Controlled low strength material shall not be used with underground structures having a span greater than 20 feet.

Controlled low strength material in new construction shall not be permanently placed higher than the basement soil. For trenches in existing pavements, permanent placement shall be no higher than the bottom of any existing pavement permeable drainage layer; if no drainage layer(s) are present, permanent placement in existing pavements shall be no higher than: a) 1 inch below the bottom of the existing asphalt concrete, or b) no higher than the top of base below existing Portland cement concrete pavements. When used, the minimum height that controlled low strength material placed relative to the pipe invert shall be: 0.5 d (diameter) for rigid pipe and 0.7 d for flexible pipe.

When controlled low strength material is proposed for use, the Contractor shall submit a mix design and test data to the Engineer for approval prior to excavating the trench for which controlled low strength material is proposed for use. The test data shall demonstrate that the mix design provides:

a) For pipe culverts having a height of cover of 20 feet or less, a 28-day compressive strength between 50 and 100 psi is required; for height of cover greater than 20 feet, a minimum 28-day compressive strength of 100 psi is required. Compressive strength shall be determined by ASTM Test Method D4832, "Preparation of Testing of Soil-Cement Slurry Test Cylinders."

b) When controlled low strength material is used as structure backfill for pipe culverts, the sections of pipe culvert in contact with the controlled low strength material shall meet the requirements of Chapter 850 of the Highway Design Manual using the minimum resistivity, pH, chloride content, and sulfate content of the hardened controlled low strength material. Minimum resistivity and pH shall be determined by California Test 643, the chloride content shall be determined by California Test 422, and the sulfate content shall be determined by California Test 417.

c) Cement shall be: any type of Portland cement conforming to the provisions of ASTM Designation C 150; any type blended hydraulic cement conforming to ASTM C 595M; or any type blended hydraulic cement conforming to the physical requirements of ASTM C 1157M. Testing will not be required.

d) Admixtures may be used in conformance with Section 90-4 of the Standard Specifications and the following: Chemical admixtures containing chlorides as CI in excess of 1 percent by mass of admixture, as determined by California Test 415, shall not be used.

Materials for controlled low strength material shall be thoroughly machine-mixed in a pugmill, rotary drum, or other approved mixer. Mixing shall continue until the cementitious material and water are thoroughly dispersed throughout the material. Controlled low strength material shall be placed in the work within 3 hours after mixing.

Controlled low strength material shall be placed in a uniform manner that will prevent voids in, or segregation of, the backfill, and will not float or shift the culvert. Foreign material that falls

© 2018 California Department of Transportation. All Rights Reserved.

into the trench prior to or during placing of the controlled low strength material shall be immediately removed.

When controlled low strength material is to be placed within the traveled way or otherwise to be covered by paving or embankment materials, it shall achieve a maximum indentation diameter of 3 inches prior to covering and opening to traffic. Penetration resistance shall be as measured by ASTM Test Method C 6024, "Standard Test Method for Ball Drop on Controlled Low Strength Material to Determine Suitability for Load Application."

Controlled low strength material used as structure backfill for pipe culverts will be considered structure backfill for compensation purposes.

© 2018 California Department of Transportation. All Rights Reserved.

Appendix I – Resolutions

Table of Contents

FILMING

Use this document for filming when:

Closure of the State Highway will require traffic redirection onto local streets or roads I-1

Filming activity requires closure of the State Highway and there is no acceptable alternate route I-2

A restriction on the State Highway occurs but no closure or detour is required I-3

Time factors do not permit a resolution adoption before the date of the filming activity and requires re-routing over City Streets/County Roads I-4

Time factors do not allow a resolution to be adopted before the date of the filming activity I-5

SPECIAL EVENTS

Use this document for special events when:

Closure of the State Highway will require traffic redirection onto local streets or roads I-6

Event activity requires closure of the State Highway and there is no acceptable alternate route I-7

A restriction on the State Highway occurs but no closure or detour is required I-8

Time factors do not permit a resolution adoption before the date of the special event and requires re-routing over City Streets/County Roads I-9

Time factors do not allow a resolution to be adopted before the date of the special event I-10

© 2018 California Department of Transportation. All Rights Reserved.

FILMING

(USE THIS RESOLUTION FORMAT WHEN CLOSURE OF THE STATE HIGHWAY WILL REQUIRE TRAFFIC REDIRECTION ONTO LOCAL STREETS OR ROADS)

WHEREAS (name of production company) _____ has applied to the State of California to conduct (describe filming activities) _____ on State property; and

WHEREAS (filming activities) _____ will require the temporary closure of State Highway Route _____ on (date) _____ between (location) _____ and _____ between the hours of _____ and _____ ; and

WHEREAS said temporary closure will cause the re-routing of traffic onto and over the following (city streets/county roads) _____: (describe routing) _____.

NOW THEREFORE be it resolved that the City/County of _____ approves and consents to the proposed (filming activities) _____ and recommends approval of and consents to the proposed re-routing of traffic onto and over the described city streets/county roads upon terms and conditions deemed appropriate and necessary by the State of California, Department of Transportation.

© 2018 California Department of Transportation. All Rights Reserved.

FILMING

(USE THIS RESOLUTION FORMAT WHEN THE FILMING ACTIVITY REQUIRES CLOSURE OF THE STATE HIGHWAY AND THERE IS NO ACCEPTABLE ALTERNATE ROUTE)

WHEREAS (name of production company) _____ has applied to the State of California to conduct (describe filming activities) _____ on State property; and

WHEREAS (filming activities) _____ will require the temporary closure of State Highway Route_____ on (date) _____ between (location) _____ and _____ between the hours of _____ and _____; and

WHEREAS there is no acceptable alternate route, with the result that traffic normally using State Highway Route _____ will be temporarily halted or restricted.

NOW THEREFORE be it resolved that the City/County of _____ approves and consents to the proposed (filming activities) _____ and recommends approval of and consents to the proposed closure/restriction of State Highway Route _____ upon terms and conditions deemed appropriate and necessary by the State of California, Department of Transportation.

© 2018 California Department of Transportation. All Rights Reserved.

FILMING

(USE THIS RESOLUTION FORMAT WHEN A RESTRICTION ON THE STATE HIGHWAY OCCURS BUT NO CLOSURE OR DETOUR IS REQUIRED)

WHEREAS (name of production company) _____ has applied to the State of California to conduct (describe filming activities) _____ on State property; and

WHEREAS (filming activities) _____ will temporarily impede and restrict the free passage of traffic over State Highway Route _____ on (date) _____ between (location) _____ and _____ between the hours of _____ and _____; and

NOW THEREFORE be it resolved that the City/County of _____ approves and consents to the proposed (filming activities) _____ and recommends approval of and consents to the proposed restriction of State Highway Route _____ upon terms and conditions deemed appropriate and necessary by the by the State of California, Department of Transportation.

© 2018 California Department of Transportation. All Rights Reserved.

FILMING

(USE THIS DOCUMENT FORMAT WHEN TIME FACTORS DO NOT PERMIT A RESOLUTION ADOPTION BEFORE THE DATE OF THE FILMING AND REQUIRES RE-ROUTING OVER CITY STREETS/COUNTY ROADS)

(To be addressed to the California Film Commission)

(Name of production company) _____ has applied to the State of California to conduct (describe filming activities) _____ on State Highway Route _____ on (date) _____, between (location) and _____ between the hours of _____ and _____. Said event will require the temporary closure of State Highway Route _____, as indicated, and the re-routing of traffic over (describe city streets/county roads) _____.

The next regularly scheduled meeting of the City Council/Board of Supervisors of _____ will be on (date) _____. A formal Resolution by the Council/Board cannot be obtained before the proposed date of the (filming activities) _____. In my capacity as (title) _____ for the City/County of _____, I am authorized to advise you that the City/County of _____ approves and consents to the proposed event upon such terms and conditions deemed appropriate and necessary by the State of California, Department of Transportation and further recommends approval of and consents to the re-routing of traffic onto and over the named city streets/county roads.

Date: _____ Signature: _____

© 2018 California Department of Transportation. All Rights Reserved.

FILMING

(USE THIS DOCUMENT FORMAT WHEN TIME FACTORS DO NOT ALLOW A RESOLUTION TO BE ADOPTED BEFORE THE DATE OF THE FILMING)

(To be addressed to the California Film Commission)

(Name of production company) _____ has applied to the State of California to conduct (describe filming activities) _____ on State Highway Route _____ on _____, between (location) and _____ between the hours of _____ and _____.

The next regularly scheduled meeting of the City Council/Board of Supervisors of will be on (date) _____. A formal Resolution by the Council/Board cannot be obtained before the proposed date of (filming activities) _____. In my capacity as (title) _____ for the City/County of _____, I am authorized to advise you that the City/County of _____ approves and consents to the proposed event upon such terms and conditions deemed appropriate and necessary by the State of California, Department of Transportation.

Date: _____ Signature: _____

© 2018 California Department of Transportation. All Rights Reserved.

SPECIAL EVENT

(USE THIS RESOLUTION FORMAT WHEN CLOSURE OF THE STATE HIGHWAY WILL REQUIRE TRAFFIC REDIRECTION ONTO LOCAL STREETS OR ROADS)

WHEREAS (name of sponsor) _____ has applied to the State of California to conduct (describe special event) _____on State property; and

WHEREAS (special event) _____ will require the temporary closure of State Highway Route _____ on (date) _____ between (location) _____ and _____ between the hours of _____ and _____; and

WHEREAS said temporary closure will cause the re-routing of traffic onto and over the following (city streets/county roads) _____, (describe routing) _____.

NOW THEREFORE be it resolved that the City/County of _____ approves and consents to the proposed (special event) _____ and recommends approval of and consents to the proposed re-routing of traffic onto and over the described city streets/county roads upon terms and conditions deemed appropriate and necessary by the State of California, Department of Transportation.

© 2018 California Department of Transportation. All Rights Reserved.

SPECIAL EVENT

(USE THIS RESOLUTION FORMAT WHEN THE SPECIAL EVENT REQUIRES CLOSURE OF THE STATE HIGHWAY AND THERE IS NO ACCEPTABLE ALTERNATE ROUTE)

WHEREAS (name of sponsor) _____ has applied to the State of California to conduct (describe special event) _____ on State property; and

WHEREAS (special event) _____ will require the temporary closure of State Highway Route _____ on (date) _____ between (location) _____ and _____ between the hours of _____ and _____; and

WHEREAS there is no acceptable alternate route, with the result that traffic normally using State Highway Route _____ will be temporarily halted or restricted.

NOW THEREFORE be it resolved that the City/County of _____ approves and consents to the proposed (special event) _____ and recommends approval of and consents to the proposed closure/restriction of State Highway Route _____ upon terms and conditions deemed appropriate and necessary by the State of California, Department of Transportation.

© 2018 California Department of Transportation. All Rights Reserved.

SPECIAL EVENT

(USE THIS RESOLUTION FORMAT WHEN A RESTRICTION ON THE STATE HIGHWAY OCCURS BUT NO CLOSURE OR DETOUR IS REQUIRED)

WHEREAS (name of sponsor) _____ has applied to the State of California to conduct (describe special event) _____ on State property; and

WHEREAS (special event) _____ will temporarily impede and restrict the free passage of traffic over State Highway Route _____ on (date) _____ between (location) _____ and _____ between the hours of _____ and _____; and

NOW THEREFORE be it resolved that the City/County of _____ approves and consents to the proposed (special event) _____ and recommends approval of and consents to the proposed restriction of State Highway Route _____ upon terms and conditions deemed appropriate and necessary by the by the State of California, Department of Transportation.

© 2018 California Department of Transportation. All Rights Reserved.

SPECIAL EVENT

(USE THIS DOCUMENT FORMAT WHEN TIME FACTORS DO NOT PERMIT A RESOLUTION ADOPTION BEFORE THE DATE OF THE SPECIAL EVENT AND REQUIRES RE-ROUTING OVER CITY STREETS/COUNTY ROADS)

(To be addressed to the Department's Permit Engineer)

(Name of sponsor) _____ has applied to the State of California to conduct (describe special event) _____ on State Highway Route _____ on (date) _____, between (location) _____ and _____ between the hours of _____ and _____. Said event will require the temporary closure of State Highway Route _____, as indicated, and the re-routing of traffic over (describe city streets/county roads) _____.

The next regularly scheduled meeting of the City Council/Board of Supervisors of _____ will be on (date) _____. A formal Resolution by the Council/Board cannot be obtained before the proposed date of the (special event) _____. In my capacity as (title) _____ for the City/County of _____, I am authorized to advise you that the City/County of _____ approves and consents to the proposed event upon such terms and conditions deemed appropriate and necessary by the State of California, Department of Transportation and further recommends approval of and consents to the re-routing of traffic onto and over the named city streets/county roads.

Date: _____ Signature: _____

© 2018 California Department of Transportation. All Rights Reserved.

SPECIAL EVENT

(USE THIS DOCUMENT FORMAT WHEN TIME FACTORS DO NOT ALLOW A RESOLUTION TO BE ADOPTED BEFORE THE DATE OF THE SPECIAL EVENT)

(To be addressed to the Department's Permit Engineer)

(Name of sponsor) _____ has applied to the State of California to conduct (describe special event) _____ State Highway Route _____ on (date) _____, between (location) _____ and _____ between the hours of _____ and _____. The next regularly scheduled meeting of the City Council/Board of Supervisors of will be on (date) _____. A formal Resolution by the Council/Board cannot be obtained before the proposed date of (special event) _____. In my capacity as (title) _____ for the City/County of _____, I am authorized to advise you that the City/County of _____ approves and consents to the proposed event upon such terms and conditions deemed appropriate and necessary by the State of California, Department of Transportation.

Date: _____ Signature: _____

© 2018 California Department of Transportation. All Rights Reserved.

Appendix J – Road Connections and Driveways

Table of Contents

Design Guidelines for Typical Rural Driveways in State Right of Way. 1

© 2018 California Department of Transportation. All Rights Reserved.

Design Guidelines for Typical Rural Driveways in State Right of Way

REFERENCES:

Please always refer to the latest Highway Design Manual (HDM) for most up to date guidelines. The HDM indexes referenced in the guidelines below can be accessed online from the following link:

https://dot.ca.gov/programs/design/manual-highway-design-manual-hdm

Initial Driveway Design Considerations:

1. **Location of the driveway shall be designed to maximize corner sight distance.** For corner sight distance, see HDM Index 405.1 (2)(c). Driveway proposals that do not meet sight distance requirements will not be permitted. The minimum corner sight distance shall be equal to the stopping sight distance as given in HDM Table 201.1. HDM Table 101.2 shows appropriate ranges of design speeds that shall be used for the various types of facilities, place types, and conditions listed (see HDM Table 101.2 Vehicular Design Speed; Table 201.1 Sight Distance Standards; Index 205.4 Driveways on Frontage roads and in Rural Areas; Index 405.1 (2) Corner Sight Distance).

2. **Driveways connecting to State highways shall be paved a minimum of 20 feet from the edge of shoulder** or to the edge of State right of way, whichever is less to minimize or eliminate gravel from being scattered on the highway and to provide a paved surface for vehicles and bicycles to accelerate and merge. Where larger design vehicles are using the driveway (e.g., dump trucks, flatbed trucks, moving vans, etc.), extend paving so the drive wheels will be on a paved surface when accelerating onto the roadway (see HDM Index 205.4 Driveways on Frontage roads and in Rural Areas).

Driveway Design Details: Once considerations 1 and 2 above are met, driveway shall be designed per the following requirements:

3. Where County or City Regulations differ from the State's, it may be desirable to follow their regulations (See HDM Index 205.4 Driveways on Frontage roads and in Rural Areas).

OR

4. Design details are shown on HDM Figure 205.1. This detail, without the recess, may be used on conventional highways (see HDM Figure 205.1 Access Openings on Expressways, Note 2).

5. Approach and departure tapers should be 50 feet longitudinal and 8 feet from edge of traveled way at the end of the taper. Approach and departure tapers are not required where the existing paved shoulder is at least 8 feet wide (see HDM Figure 205.1 Access Openings on Expressways).

Structural Section Design Details: Driveways structural section has to meet the following requirements:

6. Approach and departure tapers should have structural sections matching the existing State highway shoulders. An alternate shoulder design is allowed. See HDM Figure 613.5B for details. For asphalt driveway the structural section should be equal to or greater than edge of shoulder or approach and

© 2018 California Department of Transportation. All Rights Reserved.

departure tapers. Minimum thickness of surface course is 0.35 foot. Aggregate base depth should match State highway shoulders. Details (cross section, etc.) for concrete driveways are shown on Standard Plan A87A. Minimum thickness at driveway shall be 4 inches for residential and 6 inches for commercial. (See HDM 613.5 (2) Shoulders; Standard Plan A87A Curb and Driveways; Standard Plans are available at:

https://dot.ca.gov/programs/design/ccs-standard-plans-and-standard-specifications

7. Place shoulder backing from the edge of pavement (EP) to the hinge point (HP). Shoulder backing should be placed on a width of at least 2 feet from EP. For placement of shoulder backing thickness greater than 0.5 foot for slope repair; shoulder backing behind dikes; and where longitudinal drainage are present; see HDM for details (see HDM Index 672 Shoulder Backing and HDM Figures 672.3 A through E).

The Figure below is provided to assist driveway design for rural areas and to clarify terminologies used in the above guidance. This figure is provided for general illustration purposes and is not be used for design details. It should not to be used as a drawing in the encroachment permit application for the driveway.

Driveway Design Requirements for Rural Areas with Unimproved Frontage on Conventional State Highways

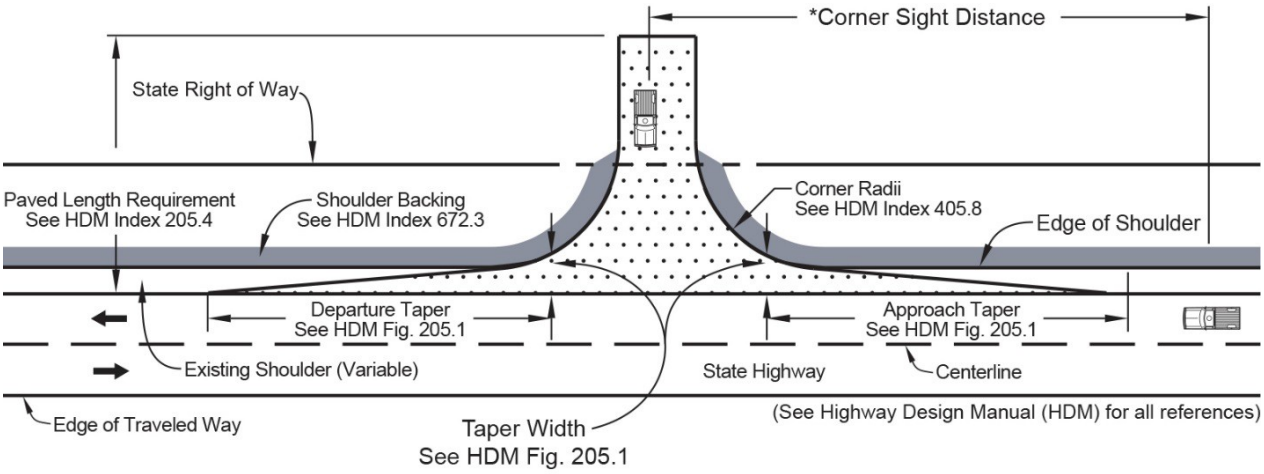

*Corner Sight Distance shall be calculated from all directions of approach. See HDM Index 405.1(2) & Figure 405.7 for set back and sight distance calculations.

Purpose: The above excerpts from the Department's HDM are shown for reference. The design standards used for any project should equal or exceed the minimum given in the manual to the maximum extent feasible. They do not replace engineering knowledge, experience, and judgment in the design of driveways.

Special situations may call for variation from policies and procedures, subject to the appropriate approval. This is not intended to, nor does it establish a legal standard or any other standard of conduct or duty toward the public.

© 2018 California Department of Transportation. All Rights Reserved.

Appendix K – Special Provisions

Table of Contents

ACCESS CONTROL AND TEMPORARY SAFETY BARRIER RETAINING WALLS AND SOUNDWALLS (WL) K-1

ADOPT-A-HIGHWAY PERMIT SPECIAL PROVISIONS K-2

ADOPT-A-HIGHWAY Safety Requirements for Participants: "C R E W P L A N S" K-5

ADVERTISING DISPLAYS (AD) K-6

AIR SPACE DEVELOPMENT (AS) K-7

ART PROGRAM (AP) K-8

BANNERS (BR) K-9

BUS PASSENGER SHELTERS, BENCHES, AND PULLOUTS--ADVERTISING AND LOCATION (BS) K-10

CABLES/GEOPHYSICAL TESTING (GC) K-11

DRAINAGE - ROOF AND SURFACE, MINOR (DM) K-12

DRIVEWAY, COMMERCIAL (RC) K-13

DRIVEWAY, RECONSTRUCTION (RM) K-14

DRIVEWAY, SINGLE FAMILY (RS) K-15

EARLY ENTRY (SC) K-16

ENCROACHMENT PERMIT GENERAL PROVISIONS K-17

FILMING - ACCIDENT RECONSTRUCTION K-22

FILMING - AIRCRAFT, PYROTECHNICS, STUNTS, ETC. (FS) K-23

FILMING - INTERMITTENT TRAFFIC CONTROL (FI) K-24

FILMING - NO MOVING TRAFFIC (FO) K-25

FILMING - TRAFFIC CONTROL (FL) K-26

FILMING - WETDOWN K-27

HAZARDOUS MATERIALS AND HAZARDOUS WASTE MANAGEMENT K-28

LAW ENFORCEMENT SURVEILLANCE DEVICES K-29

MAIL BOX (MB) K-30

NOTIFICATION OF ENCROACHMENT K-31

PEDESTRIAN SAFETY (MCP) K-32

RAILROAD GRADE CROSSING - MAINTENANCE (RX) K-33

ROLLING TRAFFIC BREAKS K-34

© 2018 California Department of Transportation. All Rights Reserved.

SIDEWALKS (CS) K-35
STEEL PLATE BRIDGING UTILITY K-36
STORMWATER SPECIAL PROVISIONS FOR MINIMAL OR NO IMPACT (SWSP) K-37
STRUCTURE AS-BUILT PLANS SUBMITTAL ROUTE SLIP K-39
STRUCTURE WORK K-40
SURVEYS (SV) K-42
TEMPORARY GROUND ANCHORS (TIEBACKS) K-43
TRAFFIC COUNTERS (SV) K-44
TRAFFIC SIGNAL CONTROLLER ASSEMBLY K-45
TRAFFIC STRIPING, MARKINGS, AND SIGNS K-46
TREE PRUNING (TRIMMING) AND CHEMICAL APPLICATION K-47
TREE REMOVAL K-50
UNCASED HIGH-PRESSURE NATURAL GAS PIPELINE PROVISIONS K-51
UNMANNED AIRCRAFT SYSTEMS (UAS) OPERATION K-53
UTILITY ANNUAL PROVISIONS K-56
UTILITY LEASING K-58
UTILITY OVERHEAD PROVISIONS (OH) K-59
UTILITY UNDERGROUND PROVISIONS (UG) K-60
VIBRIO GENERATING EQUIPMENT (GV) K-64

© 2018 California Department of Transportation. All Rights Reserved.

ACCESS CONTROL AND TEMPORARY SAFETY BARRIER RETAINING WALLS AND SOUNDWALLS (WL)

In addition to the attached General Provisions, (TR-0045), the following special provisions are also applicable:

1. A temporary 6 feet high access control fence shall be provided before removing the existing fence. Existing fence fabric shall be salvaged and delivered to the nearest State facility as directed by the State's representative at no cost to the State. The remaining access control fence shall be tied to the wall.
2. Fence posts are to be removed completely and the holes backfilled with compacted earthen material.
3. Access to the worksite from the freeway is prohibited.
4. Any material stored at the worksite within 30 feet of the traveled way when work is not in progress shall be protected by Type K barrier railing placed at a 20: 1 taper or as otherwise directed by the State's representative.
5. Any Type K barrier placed within 10 feet of the traveled way shall have one appropriate reflective marker affixed to the top of each section. A Type "P" object marker shall be installed in front of the approach end section. The end section shall also be protected by a temporary crash cushion array.

© 2018 California Department of Transportation. All Rights Reserved.

ADOPT-A-HIGHWAY PERMIT SPECIAL PROVISIONS

TR-0156 (REV. 09/2009)

1. **AUTHORITY:** The Department's authority to issue encroachment permits is provided under Division 1, Chapter 3, Articles 1 - 3, Section 660 to 734 of the Streets and Highways Code.

2. **REVOCATION/CANCELLATION:** This permit may be revoked by the Department for noncompliance with permit provisions or for failure of the permittee, or their representative to adhere to direction given by a Departmental representative. These provisions are subject to modification or abrogation at any time. This permit may be temporarily suspended due to construction or other State operations at, or within, the vicinity of the site.

   Permittee may cancel their permit at any time without consequence from the Department. Permittees using contractors are responsible for terminating those arrangements.

3. **ASSIGNMENT:** No parties other than the permittee, or permittee's authorized representative, are allowed to work under this permit.

4. **ACCEPTANCE OF PROVISIONS:** Permittee understands and agrees to accept these Adopt-A-Highway Permit Special Provisions and all attachments to this permit, for any work to be performed under this permit. It is understood and agreed by the permittee that performing work under this permit shall constitute acceptance.

5. **PERMITTEE RESPONSIBILITY:** No person shall enter the State's right of way to perform work until the Department's Maintenance Supervisor has given the permittee's group/crew leader a safety orientation, and, all participants have received safety training from the permittee's group/crew leader as described in items 20 and 24.

   It is the responsibility of the permittee to notify the District Adopt-A-Highway Coordinator of any change of permittee's address, phone number, or contact person.

6. **PLAN CHANGES:** Changes to plans, specifications, and permit provisions are not allowed without prior approval from the Department.

7. **AGE OF PARTICIPANTS:** No minors under the age of 16 are permitted to participate in the program. Minors, 16 and 17 years of age, may participate; however, there must be one adult supervisor for every five minors present at the work site. The adult supervisor must be at least 21 years old and must walk along with the group. Volunteer group leaders must be adults who are at least 21 years old.

8. **BEGINNING OF WORK:** Work authorized by this permit shall begin **after a safety orientation has been completed and within 30 calendar days from the date of issuance**, regardless of whether or not the permittee's Adopt-A-Highway courtesy sign(s) and/or recognition panel(s) have been installed. Work shall not be discontinued if the permittee's courtesy sign is damaged or stolen.

9. **ADVANCE NOTICE OF WORK:** Permittee must notify the Department's Maintenance Supervisor listed on Attachment A (Adopt-A-Highway Special Provisions) of their plans to work at least five days, but no more than one month, before the event.

10. **WORK DAYS AND HOURS:** Work must be performed during daylight hours. If weather (or other adverse circumstance) causes decreased visibility or a public hazard, work shall immediately be discontinued. Work shall not be conducted on, or within twenty-four hours preceding, the following holidays or holiday weekends: New Year's Day, Martin Luther King, Jr.'s Birthday, Washington's Birthday, Cesar Chavez's Birthday, Easter, Memorial Day, Independence Day (July 4th), Labor Day, Veteran's Day, Thanksgiving and the day after, and Christmas. Unless specified, work is permitted the day following a legal holiday or holiday weekend.

11. **PARTICIPATION IN STATEWIDE EVENTS:** Weather permitting, volunteer litter removal groups shall schedule work during the "Great American Cleanup-California" (March-May) and "California Cleanup Day" (September) events in order to support Adopt-A-Highway's participation in national and international cleanup events.

12. **CONFLICTING ENCROACHMENTS:** Permittee shall yield start of work to ongoing, prior authorized, work adjacent to or within the limits of the project site.

13. **PERMIT AT WORK SITE:** Permittee shall keep the complete permit package (Adopt-A-Highway Encroachment Permit, Adopt-A-Highway Permit Special Provisions, and if applicable, plans and work schedule) or a copy thereof, at the work site and show it upon request to any Department representative or law enforcement officer. If the permit package is not kept and made available at the work site, the work shall be suspended. In addition, a copy of the encroachment permit must be displayed in the windshield of each vehicle parked on the right of way. Vehicles without permits may receive traffic citations.

14. **PARKING AT THE WORK SITE:** Participant's personal vehicles shall not interfere with the free flow of traffic or pedestrians. Vehicles used to transport participants or materials may legally park on the right of way provided that they are located completely *off of the pavement and a minimum of six feet from any traffic lane.* If this is not possible, participants must walk to and from the site or, if the site has a shoulder, participants can use a drop-off and pick-up arrangement.

15. **WORK PROCEDURES:** Work shall proceed in the direction facing traffic. A posted safety lookout shall be used when fellow participants are unable to watch oncoming traffic.

    Work shall not be performed on or within six feet from any traffic lane or on median strips. Participants shall not walk or run across access-controlled highways (freeways), including on-ramps and off-ramps unless there are crosswalks. Participants shall not work on unstable or slippery ground, on slopes greater than approximately 40º, on bridges, in tunnels, or inside culverts. Unless excluded by the aforementioned conditions, or entered on Attachment A, Work Procedures, litter removal and vegetation control shall be performed behind soundwalls.

16. **PUBLIC TRAFFIC CONTROL:** All forms of traffic control, including shoulder, lane, and ramp closures, signs, cones, vehicles, or any other traffic control device are prohibited under this permit.

17. **SAFETY EQUIPMENT:** It is required that all participants wear hard hats, safety vests, gloves, and protective eye wear while on the State's right-of-way. The Department will provide these and, if needed, litter pickers to volunteers free of charge. In addition, participants are required to wear long pants and substantial leather shoes or boots with ankle support. Any State-furnished, personal protective equipment, unused materials, and tools shall be returned upon termination of the permit.

18. **LITTER BAGS**: Participants shall use white, Adopt-A-Highway bags provided by the Department. Securely tied, filled bags must be placed at least six feet from the edge of traffic lanes and off of paved shoulders. Bags must be placed in locations where they are not obstructing drainage and where Departmental maintenance forces can easily see them and safely retrieve them. Whenever possible, bags should be stacked together and/or placed 100 feet from structures. It

© 2018 California Department of Transportation. All Rights Reserved.

is important for participants to leave their filled bags at the site so that the Department can verify that work frequencies are being met. Also, the monthly count of white bags collected, enables the Department to quantify the value of the Adopt-A-Highway Program. (Participants may take bags of recyclables home.)

19. **STORAGE OF EQUIPMENT AND MATERIALS:** Unless specified in the Permittee's planting and/or work plans, storage of equipment and materials (other than filled, Adopt-A-Highway litter bags) on the State right of way is not authorized under this permit.

20. **SAFETY PROCEDURES FOR VOLUNTEER GROUPS:**

A. **Designate group leaders.** Each permittee shall designate a group leader and an alternate group leader to represent the group. Unless otherwise notified, the Department considers the group leader to be the individual whose name appears on the attached encroachment permit.

Unless otherwise notified, the Department considers the alternate group leader to be the individual named as the alternate contact on the Adopt-A-Highway Program Application.

B. **Attend a Caltrans safety orientation.** Both the group leader and the alternate group leader shall schedule and attend a safety orientation given by the Department's Maintenance Supervisor. The "Adopt-A-Highway Safety Orientation Checklist for Volunteers" will be reviewed, signed, and copies given to the group leaders.

C. **Obtain safety equipment:** Safety equipment and a copy of the Adopt-A-Highway safety video shall be issued during the Caltrans safety orientation. Participants who need them will also receive Adopt-A-Highway litter bags and litter pickers. Additional safety equipment and litter bags may be obtained as needed throughout the permit period from the Department's Maintenance Supervisor.

D. **Provide safety training to all group members.** The group leader or alternate group leader shall then provide safety training for all participants before they attend a work event. The encroachment permit and special provisions shall be explained and part two of the Adopt-A-Highway safety video must be viewed.

E. **Conduct safety reviews before each work event.** The group leader or alternate group leader shall conduct a brief, off-site safety review each time the group goes out to work. The "Safety Requirements for Participants" and the "Bag It, Move It, or Leave It?" handouts shall be reviewed. The group leader or alternate group leader shall ensure that all participants are equipped with safety gear and that minors will be adequately supervised. The group leader or alternate group leader must participate in the work event.

F. **Provide annual safety training.** The group leader or alternate group leader shall hold an annual safety training refresher for all participants. Once again, the encroachment permit and special provisions shall be explained and part two of the Adopt-A-Highway safety video viewed.

G. **Report Injuries, Accidents, and Incidents.** The following occurrences shall be reported to the District Adopt-A-Highway Coordinator by the next business day: injuries resulting in an individual seeking medical treatment, vehicular damage resulting in an insurance claim and/or police report, and incidents where the California Highway Patrol was contacted.

H. **Report changes in contact information or leadership to the District Adopt-A-Highway Coordinator.** New group leaders, appointed during the permit period, must make arrangements to attend a safety orientation given by the Department's Maintenance Supervisor, not the permittee's previous group leaders.

21. **ADOPT-A-HIGHWAY SIGNS:** The Department shall furnish, install, and maintain an Adopt-A-Highway courtesy sign(s) and standard recognition panel(s) at the adoption site in recognition of the Permittee's contribution. Standard recognition panels shall display the Permittee's name in black, block letters on a white background. Permittees may furnish a customized, recognition panel(s) at their own expense. Specifications for the recognition panel's wording, size, color, type style, placement, and any subsequent modifications shall be solely determined and approved by the Department. (Note: "Spot" Wildflower and Supplemental Litter Removal adoptions do not meet minimum requirements for a courtesy sign.) **Neither the Adopt-A- Highway Program nor it's courtesy signs are intended to pro- vide a forum for advertisement, solicitation, or public discourse.**

22. **WHEN AN ADOPT-A-HIGHWAY CONTRACTOR IS UTILIZED:** Individuals, organizations, and businesses may adopt segments of highway and have the required adoption work performed by a professional business through contract or agreement. Contractors must submit a separate Adopt-A-Highway Permit Application and will be issued a "double permit." Only contractors that have been pre-ap- proved by the Department may be utilized. In order to receive Departmental approval, contractors must submit and maintain the following documents:

A. **Liability Insurance:** Contractors with employees shall maintain $1,000,000 of general liability insurance for each occurrence, plus $2,000,000 of excess liability insurance (totaling $3,000,000). Contractors who do not utilize paid employees shall maintain $1,000,000 in general liability insurance for each occurrence; no excess liability insurance is required. All certificates of liability insurance shall name the State of California Department of Transportation as additional insured.

B. **Vehicular insurance,** in the minimum amount of one million dollars, is required of all contractors.

C. **Worker's compensation insurance,** in the minimum amount of one million dollars, is required for contractors who employ persons to perform work authorized under this permit.

D. **Professional licensing** as required by the California Contractors State License Board and/or the California Department of Pesticide Regulation to perform work authorized under this permit. **Subcontracting is not permitted under the Adopt- A-Highway Program.**

E. **County and/or city business licenses** as required by local governments to perform work authorized under this permit.

Contractors are required to provide a minimum notice of 30 days to the Department's District Adopt-A-Highway Coordinator or State-wide Adopt-A-Highway Coordinator before any reduction in cover-age and/or cancellation of coverage becomes effective.

23. **INSTALLATION OF RECOGNITION PANELS BY ADOPT-A-HIGHWAY CONTRACTORS:** Adopt-A-Highway contractors may install recognition panels at specific locations if the work is authorized on page one of the attached Encroachment Permit (Adopt-A-Highway) and they have received an Adopt-A-Highway Service Contractor Recognition Panel Installation Order.

© 2018 California Department of Transportation. All Rights Reserved.

24. SAFETY PROCEDURES FOR ADOPT-A-HIGHWAY CONTRACTORS:

A. **Attend a Caltrans safety orientation.** Adopt-A-Highway contractors shall abide by safety requirements set forth by California Occupational Safety and Health Administration (Cal-OSHA). In addition, the contractor's crew leader must schedule and attend a safety orientation given by the Department's Maintenance Supervisor. The "Safety Orientation Checklist for Adopt-A-Highway Contractors" will be reviewed, signed, and a copy given to the crew leader.

B. **Report Injuries, Accidents, and Incidents.** The following occurrences shall be reported to the District Adopt-A-Highway Coordinator by the next business day. Injuries resulting in an individual seeking medical treatment, vehicular damage resulting in an insurance claim and/or police report, and incidents where the California Highway Patrol was contacted.

C. **Contractor's crew must carry an identification card.** The card must list the employee's name, the name of the Adopt-A-Highway contractor, and a phone number where the crew leader can be reached during working hours.

25. PERMITS FROM OTHER AGENCIES: This permit is invalid if the permittee has not obtained all permits necessary and required by law, from Cal-OSHA, the Public Utilities Commission of the State of California (PUC), the California Contractors State License Board, the California Department of Pesticide Regulation, or any other public agency having jurisdiction.

26. COST OF WORK: Unless stated in the permit, or a separate written agreement, the permittee shall bear all costs incurred for work within the State right of way and waives all claims for indemnification or contribution from the State.

27. LABOR CODE COMPLIANCE - PREVAILING WAGES: If the scope of work granted under this Adopt-A-Highway permit is performed under a contract between the permittee/adopter and a contractor, and falls within the parameters of the Labor Code section 1720(a)(1) definition of a "public work" in that it is construction, alteration, demolition, installation, repair or maintenance, The permittee/adopter herein agrees to require its contractor to conform to the provisions of Labor Code sections 1720 through 1815, all applicable regulations and coverage determinations issued by the Department of Industrial Relations. Adopt-A-Highway adopters agree to include prevailing wage requirements in any service contract for public work. Work performed by Adopt-A-Highway adopter's own forces or persons working voluntarily without compensation are exempt from the Labor Code's prevailing wage requirements.

28. UNDERGROUND SERVICE ALERT (USA) NOTIFICATION: Any excavation requires compliance with the provisions of Government Code Section 4216 et. seq., including, but not limited to, notice to a regional notification center, such as Underground Service Alert (USA). The permittee shall provide notification at least 48 hours before performing any excavation work within the right of way.

29. ARCHAEOLOGICAL/HISTORICAL: If any archaeological or historical resources are revealed in the work vicinity, the permittee shall immediately stop work and notify the Department's Maintenance Supervisor.

30. DURATION OF PERMIT: Unless otherwise specified, this permit is valid for five calendar years from the date of issuance. Permittees may apply for additional five-year permits, provided the that the permittee and/or the permittee's contractor have satisfactorily met the terms of the existing permit and the site remains suitable for adoption. If the permittee wishes to reapply, a notice of such intent shall be submitted to the District Adopt-A-Highway Coordinator at least 30 days prior to the expiration date of this permit.

31. NO PRECEDENT ESTABLISHED: This permit is issued with the understanding that it does not establish a precedent.

32. RESPONSIBILITY FOR DAMAGE: The State of California and all officers and employees thereof, including but not limited to the Director of Transportation and the Deputy Director, shall not be answerable or accountable in any manner for injury to or death of any person, including but not limited to the permittee, persons employed by the permittee, persons acting in behalf of the permittee, or for damage to property from any cause. The permittee shall be responsible for any liability imposed by law and for injuries to or death of any person, including but not limited to the permittee, persons employed by the permittee, persons acting in behalf of the permittee, or for damage to property arising out of work, or other activity permitted and done by the permittee under a permit, or arising out of the failure on the permittee's part to perform his obligations under any permit in respect to maintenance or any other obligations, or resulting from defects or obstructions, or from any cause whatsoever during the progress of the work, or other activity or at any subsequent time, work or other activity is being performed under the obligations provided by and contemplated by the permit.

The permittee shall indemnify and save harmless the State of California, all officers, employees, and State's contractors, thereof, including but not limited to the Director of Transportation and the Deputy Director, from all claims, suits or actions of every name, kind and description brought for or on account of injuries to or death of any person, including but not limited to the permittee, persons employed by the permittee, persons acting in behalf of the permittee and the public, or damage to property resulting from the performance of work or other activity under the permit, or arising out of the failure on the permittee's part to perform his obligations under any permit in respect to maintenance or any other obligations, or resulting from defects or obstructions, or from any cause whatsoever during the progress of the work, or other activity or at any subsequent time, work or other activity is being performed under the obligations provided by and contemplated by the permit, except as otherwise provided by statute.

The duty of the permittee to indemnify and save harmless includes the duties to defend as set forth in Section 2778 of the Civil Code. The permittee waives any and all rights to any type of expressed or implied indemnity against the State, its officers, employees, and State contractors. It is the intent of the parties that the permittee will indemnify and hold harmless the State, its officers, employees, and State's contractors, from any and all claims, suits or actions as set forth above regardless of the existence or degree of fault or negligence, whether active or passive, primary or secondary, on the part of the State, the permittee, persons employed by the permittee, or acting on behalf of the permittee.

For the purpose of this section, "State's contractors" shall include contractors and their subcontractors under contract to the State of California performing work within the limits of this permit.

© 2018 California Department of Transportation. All Rights Reserved.

ADOPT-A-HIGHWAY

Safety Requirements for Participants: "C R E W P L A N S"

Contact Caltrans. Notify your Maintenance field representative of your plans to work at least five days, but no more than one month, before the event. If State construction or maintenance activities have been scheduled at your adoption site on that same day, you will not be permitted to work.

Review safety procedures. Review these "Safety Requirements for Participants" and the "Bag It, Move It, or Leave It?" instructions with all participants at an off-site location prior to each work event.

Evaluate weather conditions. Work must be performed during daylight hours. Do not work, or discontinue working, if weather (or other adverse circumstance) decreases visibility or causes a public hazard.

Wear your safety gear. It is required that participants wear safety vests, hard hats, gloves, protective eye wear, long pants, and substantial leather shoes or boots with ankle support. Light-colored clothing and long-sleeved shirts are recommended. Put on your safety gear before travelling to your site and do not take it off on until you have left the roadside.

Park in a safe place. Please carpool. Vehicles must park completely off of paved areas and be at least six feet from any traffic lane. If this is not possible and your site has a shoulder, then use a drop-off and pick-up arrangement instead. Or, enter and exit your site on foot from locations that allow you to face oncoming traffic. If in doubt about the safest way to access your site, please contact your Maintenance field representative for advice.

Look out for danger and look out for each other. Always work facing oncoming traffic. Use a safety lookout when fellow workers are unable to see oncoming traffic. Watch your footing and be alert for snakes, stinging insects, and poisonous plants. If your encroachment permit authorizes minors to participate, you must have at least one adult supervisor over the age of 21 at the site for every five minors present. Do not work alone.

Alert the California Highway Patrol (call 911) if you find an extremely hazardous item. Identify all objects before touching them and handle found items according to the procedures outlined in the "Bag It, Move It, or Leave It" instructions.

Never risk injury. Work shall not be performed on median strips. Stay completely off of paved areas and always remain at least six feet from any traffic lane; this includes crossing freeway on-ramps and off-ramps. Use extreme caution when crossing conventional, two-lane highways; plan to use crosswalks and signals where available. Do not work on unstable or slippery ground, on bridges, in tunnels, or in drainage facilities. Avoid behaviors that will distract motorists; this includes working in groups of more the three or four persons. Drink plenty of water. Use tools to help prevent over exertion. For example, litter removal groups should use litter pickers instead of bending to pickup litter and graffiti removal groups should use rollers instead of brushes to paint large areas.

Stack your bags. Do not overload or compact litter bags and be sure to tie them securely closed. Whenever possible, stack several filled bags together. Place bags completely off of paved areas and at least six feet from any traffic lane. Make sure that the bags are located where Caltrans maintenance crews can easily see them and safely retrieve them.

ADDITIONAL REQUIREMENTS: 1) No person shall enter the State's right of way to perform work until a Caltrans representative has given the permittee's safety leader a safety orientation, and, all participants have received safety training from that safety leader. **2)** A complete encroachment permit "package" (encroachment permit, special provisions, and any plans and schedules) must be present at the site. In addition, a copy of the encroachment permit must be displayed on the dashboard of each vehicle parked on the State's right of way. **3)** Work shall not be conducted on, or within twenty-four hours preceding, holidays or holiday weekends. Refer to your Encroachment Permit Special Provisions for a listing of holidays and possible additional work restrictions specific to your adoption site.

© 2018 California Department of Transportation. All Rights Reserved.

ADVERTISING DISPLAYS (AD)

In addition to the attached General Provisions (TR-0045), the following special provisions are also applicable:

I. GENERAL

1. Signs, Marquees and Awnings overhanging State highway right of way (R/W) shall comply with the requirements of the applicable local agency, the latest edition of the Uniform Building Code (UBC) or these special provisions, whichever is the higher standard.

II. SIGNS

1. Vertical Clearance: The minimum clearance of signs from the sidewalk shall be 12 feet.
2. Codes: Must be structurally adequate and conform to applicable building code and Caltrans' Outdoor Advertising Regulations.
3. Location: Support shall be off the right of way. The overhang shall be at least 2 feet behind the curb line. If no curbs are in place, the signs should be placed so that some physical barrier prevents them from being struck.
4. Advertising: The wording on the sign may only identify either the owner, the goods sold or manufactured on the premises or the services rendered.
5. Lights: No flashing, rotating or intermittent lights shall be allowed except approved public service information. Signs that contain red, yellow, or green lights shall not be permitted where they could interfere with the driver's perception of traffic signals.
6. No displays shall interfere with or hide traffic signals or traffic signs.
7. Any future change of copy or location must be covered by a separate permit.

III. MARQUEES

1. The horizontal clearance between a marquee and the curb line shall not be less than 2 feet.
2. The minimum vertical clearance from the sidewalk shall be 12 feet.
3. A marquee shall be supported entirely by the building.
4. Any drainage from the marquee shall not fall on or drain across the sidewalk.

IV. AWNINGS

1. An awning is a temporary shelter supported entirely from the exterior wall of a building.
2. Awnings may identify the owner or place of business.

© 2018 California Department of Transportation. All Rights Reserved.

AIR SPACE DEVELOPMENT (AS)

In addition to the attached General Provisions, (TR-0045), the following special provisions are also applicable:

1. Column Protection: shall be lumber at least 2 inches nominal thickness and at least 4 inches nominal width with 2 inches maximum clear space between pieces. The lumber shall be strapped to columns with a minimum of three (3) galvanized steel bands. The bottoms of the pieces of lumber shall be 2 feet or less above the ground and tops 8 feet minimum above the ground.
2. Fencing: a standard 6 feet high chain link fence may be installed around the perimeter of the leasing area with gate (s) as designated. Security may be enhanced by the installation of vertical brackets on the fence posts and attaching three (3) strands of barbed wire to the brackets. THE USE OF RAZOR RIBBON COILS ATOP THE FENCE IS PROHIBITED.
3. The improvements shall not be occupied by the leasee until all work is completed to the satisfaction of the State and a notice of completion has been issued to the permittee.
4. Upon completion of the work, the permittee shall submit one set of film positive reproducible, either matte or clear, "As-Built" plans to the District Permit Engineer.

© 2018 California Department of Transportation. All Rights Reserved.

ART PROGRAM (AP)

In addition to the attached General Provisions (TR-0045), the following special provisions are also applicable:

1. Artwork located within State right of way will be considered a gift to the people of California.
2. Caltrans reserves the right to reproduce the artwork for publicity type purposes.
3. No commercial advertising on State right of way is allowed. Any identification of the donor or sponsor must have prior approval by Caltrans.
4. The permittee must maintain the integrity of the artwork until further notice. The permittee agrees to remove the artwork if so ordered by Caltrans.
5. The permittee shall abide by Caltrans' safety rules and regulations, including traffic control.

© 2018 California Department of Transportation. All Rights Reserved.

BANNERS (BR)

In addition to the attached General Provisions (TR-0045), the following special provisions are also applicable:

I. BANNERS

1. The banners shall not contain private advertising nor be of a political nature.
2. The lower edge of the banners shall be at least 18' above the highway pavement at its closest point.
3. Suspension or installation on State owned traffic signal poles or other State owned facilities is prohibited.
4. Local police shall provide traffic control while banner is being installed or removed.
5. The display may not be in place more than two weeks prior to the event and shall be immediately removed after the, event.

II. HOLIDAY DECORATIONS

1. Installation of Holiday decorations shall not begin prior to the day after Thanksgiving Day.
2. Decorations attached to vertical structures such as power, telephone, or light poles, are not to project beyond the curb line and shall not hang below a height of 14'. Decorations which project beyond the curb line or cross the highway shall have a minimum vertical clearance of 18'.
3. Decorations shall not be attached to State owned poles.
4. Decorative lighting displaying red, yellow, or green lights shall not be placed where they could interfere with the driver's perception of traffic signals.

© 2018 California Department of Transportation. All Rights Reserved.

BUS PASSENGER SHELTERS, BENCHES, AND PULLOUTS--ADVERTISING AND LOCATION (BS)

In addition to the attached General Provisions (TR-0045), the following special provisions are also applicable:

1. Advertising displays on bus passenger shelters or benches may not be within 660' of and visible from any Federal Aid Interstate or Primary highway. Advertising displays shall only be placed at approved passenger loading areas. The advertising displays must not extend beyond the exterior limits of the shelter or bench. Advertising shall not exceed two (2) display panels per shelter or bench.
2. Bus passenger shelters and benches shall be located a minimum of 2' behind the face of curb, with a minimum of 4' width of walkway available.
3. All pavement shall be saw cut prior to removal.
4. Pavement markings obliterated shall be replaced in kind by permittee.
5. No telephone installations are authorized by this permit.

© 2018 California Department of Transportation. All Rights Reserved.

CABLES/GEOPHYSICAL TESTING (GC)

In addition to the attached General Provisions (TR-0045), the following special provisions are also applicable:

1. The shear wave method of geo-physical testing is prohibited.
2. Cables shall not be left on the roadbed overnight.
3. Personnel working within the right of way shall wear orange colored outer garments and hard-hats.
4. No equipment shall be parked on or operated on the traveled way except for normal legal travel.
5. No holes shall be drilled and no blasting shall be conducted on State right of way.
6. On overcrossing structures, cables shall be placed within 6" of curb face.
7. No equipment, work, or personnel shall be allowed within access controlled rights of way except for personnel and cable necessary to place cable crossings required for continuity. Cable shall cross access-controlled rights of way in culverts or at crossing structures if available within 500' of proposed crossing. Any drainage channel shall not be disturbed.
8. Cables shall be placed as close to the right of way line a practical.
9. Cable shall be securely attached to the traveled way by taping. No nails, spikes or other material shall be driven into the pavement.
10. No paint shall be placed upon highway pavements, signs or markers. If pavement markings are necessary, traffic tape, chalk or crayon shall be used. All tape, stakes and other obvious markers shall be removed upon completion of permitted work.
11. All mud, dirt or gravel tracked onto the highway pavement shall be immediately and completely removed.
12. Any ruts or other damage to unpaved shoulder areas caused by driving or operating equipment on soft shoulders shall be repaired immediately.
13. Should any deviation from these procedures be observed, all work shall be suspended until satisfactory steps have been taken to insure compliance.
14. Except as specifically provided herein, all requirements of the vehicle code and other applicable laws must be complied with in all particulars.
15. Work shall be limited to normal working hours unless otherwise specifically authorized on the permit. Permittee will be required to deposit an amount equal to four-hours minimum of overtime per day for inspection charges, if work is permitted beyond normal working hours, weekends or holidays.

© 2018 California Department of Transportation. All Rights Reserved.

DRAINAGE - ROOF AND SURFACE, MINOR (DM)

In addition to the attached General Provisions (TR-0045), the following special provisions are also applicable.

1. Drains must be restricted to the exclusive purpose of draining rain water from the roof of permittee's building and/or paved parking lot. Drains if used for any other purpose, such as draining waste water or domestic supply water into the highway, will not be authorized. Drains shall be installed at right angles to the curb line unless otherwise authorized.
2. Removal of PCC Sidewalks or Curbs: Concrete sidewalks or curbs shall be saw cut to the nearest score marks and replaced equal in dimension to that removed with score marks matching existing adjacent sidewalk or curb.
3. After pipe drains are installed, curb and sidewalk shall be replaced with Portland Cement Concrete in accordance with State Standard Specifications.

© 2018 California Department of Transportation. All Rights Reserved.

DRIVEWAY, COMMERCIAL (RC)

In addition to the attached General Provisions (TR-0045), the following special provisions are also applicable:

1. Asphalt Concrete or PCC pavement shall be saw-cut at conform location.
2. Excavations made within the limits of the right of way shall be backfilled before leaving the work for the night unless otherwise authorized by State's representative. After backfilling, temporary surfacing shall be placed if required by State's representative.
3. The permittee shall contact State's representative before placing structural section materials for the roadway pavement.
4. The approach fill area shall slope away from the highway pavement or improved shoulder and shall be so constructed as to avoid any flowing water reaching the traveled way and to avoid pocketing or ponding of water.
5. If not shown on project plans, the road approach or driveway shall conform to the “Design Guidelines for Typical Rural Driveways in State Right of Way.”

© 2018 California Department of Transportation. All Rights Reserved.

DRIVEWAY, RECONSTRUCTION (RM)

In addition to the attached General Provisions (TR-0045), the following special provisions are also applicable:

1. Where reconstruction requires removal of existing asphalt concrete pavement, it shall be either saw-cut before removal or removed by grinding.
2. Existing drainage shall not be impaired.

© 2018 California Department of Transportation. All Rights Reserved.

DRIVEWAY, SINGLE FAMILY (RS)

In addition to the attached General Provision (TR-0045), the following special provisions are also applicable:

I. RURAL LOCATIONS

1. The driveway shall be surfaced with a minimum of 3" of asphalt concrete placed on 6" of well graded and compacted aggregate base and shall conform to the existing pavement.
2. Existing drainage shall not be impaired. Either a valley gutter or a culvert shall be provided.
3. Where a culvert is installed, it shall be installed in the flowline of the existing drainage ditch at a slope to provide maximum drainage.
4. A standard tapered end section shall be installed at the inlet and outlet of the culvert.
5. Any change in the existing drainage pattern, whether occasioned by increase or diversion, and the cost of any damage, repair or restoration of the State highway right of way shall be the responsibility of the permittee.
6. Driveway installation shall conform to the attached plan, “Design Guidelines for Typical Rural Driveways in State Right of Way.”

II. URBAN LOCATIONS

1. Where curbs exist, the driveway structural section shall be a minimum of 4" of Portland Cement Concrete (PCC) over 6" of aggregate base.
2. Driveway details shall comply with State standards unless local standards exceed the State's.
3. Any existing utility boxes must be either relocated or adjusted to grade at the permittee's expense.
4. Removal of PCC Sidewalks or Curbs: sidewalks or curbs shall be saw cut to the nearest score marks and replaced equal in dimension to that removed with score marks matching existing adjacent sidewalk or curb.

© 2018 California Department of Transportation. All Rights Reserved.

EARLY ENTRY (SC)

In addition to the attached General Provisions (TR-0045), the following special provisions are also applicable:

1. In the event contract is not awarded to permittee, he/she is liable for all charges for surveying material inspection and construction inspection by State personnel relating to this permit.
2. Prior to starting any work under this permit, the contractor will sign Attachment No.1 and return it to the State's representative.

© 2018 California Department of Transportation. All Rights Reserved.

ENCROACHMENT PERMIT GENERAL PROVISIONS

TR-0045 (REV 01/2020)

1. **AUTHORITY:** The California Department of Transportation ("Department") has authority to issue encroachment permits under Division 1, Chapter 3, Article 1, Sections 660 through 734 of the Streets and Highways Code.
2. **REVOCATION:** Encroachment permits are revocable on five (5) business days' notice unless otherwise stated on the permit and except as provided by law for public corporations, franchise holders, and utilities. Notwithstanding the foregoing, in an emergency situation as determined by the Department, an encroachment permit may be revoked immediately. These General Provisions and any applicable Special Provisions are subject to modification or abrogation by the Department at any time. Permittees' joint use agreements, franchise rights, reserved rights or any other agreements for operating purposes in State of California ("State") highway right-of-way may be exceptions to this revocation.
3. **DENIAL FOR NONPAYMENT OF FEES:** Failure to pay encroachment permit fees when due may result in rejection of future applications and denial of encroachment permits.
4. **ASSIGNMENT:** This encroachment permit allows only the Permittee or Permittee's authorized agent to work within or encroach upon the State Highway System, and the Permittee may not assign this permit.
5. **ACCEPTANCE OF PROVISIONS:** Permittee understands and agrees to accept and comply with these General Provisions, the Special Provisions, any and all terms and/or conditions contained in or incorporated into the encroachment permit, and all attachments to the encroachment permit (collectively "the Permit Conditions"), for any encroachment, work, and/or activity to be performed under this encroachment permit and/or under color of authority of this encroachment permit. Permittee understands and agrees the Permit Conditions are applicable to and enforceable against Permittee as long as the encroachment remains in, under, or over any part of the State Highway System.
6. **BEGINNING OF WORK:** When traffic is not impacted (see General Provision Number 35), the Permittee must notify the Department's representative two (2) business days before starting permitted work. Permittee must notify the Department's representative if the work is to be interrupted for a period of five (5) business days or more, unless otherwise agreed upon. All work must be performed on weekdays during regular work hours, excluding holidays, unless otherwise specified in this encroachment permit.
7. **STANDARDS OF CONSTRUCTION:** All work performed within State highway right-of-way must conform to all applicable Departmental construction standards including but not limited to: Standard Specifications, Standard Plans, Project Development Procedures Manual, Highway Design Manual and Special Provisions.
   Other than as expressly provided by these General Provisions, the Special Provisions, the Standard Specifications, Standard Plans, and other applicable Departmental standards, nothing in these General Provisions is intended to give any third party any legal or equitable right, remedy, or claim with respect to these General Provisions or any provision herein. These General Provisions are for the sole and exclusive benefit of the Permittee and the Department.
   Where reference is made in such standards to "Contractor" and "Engineer," these are amended to be read as "Permittee" and "Department's representative," respectively, for purposes of this encroachment permit.
8. **PLAN CHANGES:** Deviations from plans, specifications, and/or the Permit Conditions as defined in General Provision Number 5 are not allowed without prior approval from the Department's representative.
9. **INSPECTION AND APPROVAL:** All work is subject to monitoring and inspection. Upon completion of work, Permittee must request a final inspection for acceptance and approval by the Department. The local public agency Permittee must not give final construction approval to its contractor until final acceptance and approval by the Department is obtained.
10. **PERMIT AT WORKSITE:** Permittee must keep the permit package or a copy thereof at the work site at all times and must show it upon request to any Department representative or law enforcement officer. If the permit package, or a copy thereof, is not kept and made available at the work site at all times, the work must be suspended.
11. **CONFLICTING ENCROACHMENTS:** Permittee must yield start of work to ongoing, prior authorized work adjacent to or within the limits of the Permittee's project site. When existing encroachments conflict with Permittee's work, the Permittee must bear all cost for rearrangements (e.g., relocation, alteration, removal, etc.).
12. **PERMITS FROM OTHER AGENCIES:** This encroachment permit is invalidated if the Permittee has not obtained all permits necessary and required by law, including but not limited to permits from the California Public Utilities Commission (CPUC), California Occupational Safety and Health Administration (Cal-OSHA), or any other public agency having jurisdiction. Permittee warrants all such permits have been obtained before beginning work under this encroachment permit.
13. **PEDESTRIAN AND BICYCLIST SAFETY:** A safe minimum continuous passageway of four (4) feet must be maintained through the work area at existing pedestrian or bicycle facilities. At no time must pedestrians be

© 2018 California Department of Transportation. All Rights Reserved.

diverted onto a portion of the street used for vehicular traffic. At locations where safe alternate passageways cannot be provided, appropriate signs and barricades must be installed at the limits of construction and in advance of the limits of construction at the nearest crosswalk or intersection to detour pedestrians to facilities across the street. Attention is directed to Section 7-1.04, Public Safety, of the Department's Standard Specifications.

14. **PUBLIC TRAFFIC CONTROL:** As required by law, the Permittee must provide traffic control protection, warning signs, lights, safety devices, etc., and take all other measures necessary for the traveling public's safety. While providing traffic control, the needs of all road users, including but not limited to motorists, bicyclists and pedestrians, including persons with disabilities in accordance with the Americans with Disabilities Act, must be an essential part of the work activity.
    Lane and/or shoulder closures must comply with the Department's Standard Specifications and Standard Plans for traffic control systems, and with the applicable Special Provisions. Where issues are not addressed in the Standard Specifications, Standard Plans, and/or Special Provisions, the California Manual on Uniform Traffic Control Devices (Part 6, Temporary Traffic Control) must be followed.
15. **MINIMUM INTERFERENCE WITH TRAFFIC:** Permittee must plan and conduct work so as to create the least possible inconvenience to the traveling public, such that traffic is not unreasonably delayed.
16. **STORAGE OF EQUIPMENT AND MATERIALS:** The storage of equipment or materials is not allowed within State highway right-of-way, unless specified within the Special Provisions of this encroachment permit. If encroachment permit Special Provisions allow for the storage of equipment or materials within the State highway right-of-way, the equipment and material storage must also comply with Section 7-1.04, Public Safety, of the Department's Standard Specifications.
17. **CARE OF DRAINAGE:** Permittee must provide alternate drainage for any work interfering with an existing drainage facility in compliance with the Department's Standard Specifications, Standard Plans, and/or as directed by the Department's representative.
18. **RESTORATION AND REPAIRS IN STATE HIGHWAY RIGHT-OF-WAY:** Permittee is responsible for restoration and repair of State highway right-of-way resulting from permitted work (Streets and Highways Code, section 670 et seq.).
19. **STATE HIGHWAY RIGHT-OF-WAY CLEAN UP:** Upon completion of work, Permittee must remove and dispose of all scraps, refuse, brush, timber, materials, etc. off the State highway right-of-way. The aesthetics of the highway must be as it was before work started or better.
20. **COST OF WORK:** Unless stated otherwise in the encroachment permit or a separate written agreement with the Department, the Permittee must bear all costs incurred for work within the State highway right-of-way and waives all claims for indemnification or contribution from the State, the Department, and from the Directors, officers, and employees of the State and/or the Department.
21. **ACTUAL COST BILLING:** When specified in the permit, the Department will bill the Permittee actual costs at the currently set Standard Hourly Rate for encroachment permits.
22. **AS-BUILT PLANS:** When required, Permittee must submit one (1) set of folded as-built plans within thirty (30) calendar days after completion and acceptance of work in compliance with requirements listed as follows:
    a) Upon completion of the work provided herein, the Permittee must submit a paper set of As-Built plans to the Department's representative.
    b) All changes in the work will be shown on the plans, as issued with the permit, including changes approved by Encroachment Permit Rider.
    c) The plans are to be prominently stamped or otherwise noted "AS-BUILT" by the Permittee's representative who was responsible for overseeing the work. Any original plan that was approved with a Department stamp, or by signature of the Department's representative, must be used for producing the As-Built plans.
    d) If construction plans include signing or striping, the dates of signing or striping removal, relocation, or installation must be shown on the As-Built plans when required as a condition of the encroachment permit. When the construction plans show signing and striping for staged construction on separate sheets, the sheet for each stage must show the removal, relocation, and installation dates of the appropriate staged striping and signing.
    e) As-Built plans must contain the Encroachment Permit Number, County, Route, and Post Mile on each sheet.
    f) The As-Built Plans must not include a disclaimer statement of any kind that differs from the obligations and protections provided by sections 6735 through 6735.6 of the California Business and Professions Code. Such statements constitute non-compliance with Encroachment Permit requirements and may result in the Department retaining Performance Bonds or deposits until proper plans are submitted. Failure to comply may also result in denial of future encroachment permits or a provision requiring a public agency to supply additional bonding.
23. **PERMITS FOR RECORD PURPOSES ONLY:** When work in the State highway right-of-way is within an area under a Joint Use Agreement (JUA) or a Consent to Common Use Agreement (CCUA), a fee exempt encroachment permit is issued to the Permittee for the purpose of providing a notice and record of work. The Permittee's prior rights must be preserved without the intention of creating new or different rights or obligations. "Notice and Record Purposes Only" must be stamped across the face of the encroachment permit.

© 2018 California Department of Transportation. All Rights Reserved.

24. **BONDING:** The Permittee must file bond(s), in advance, in the amount(s) set by the Department and using forms acceptable to the Department. The bonds must name the Department as obligee. Failure to maintain bond(s) in full force and effect will result in the Department stopping all work under this encroachment permit and possibly revoking other encroachment permit(s). Bonds are not required of public corporations or privately-owned utilities unless Permittee failed to comply with the provisions and/or conditions of a prior encroachment permit. The surety company is responsible for any latent defects as provided in California Code of Civil Procedure section 337.15. A local public agency Permittee also must comply with the following requirements:
    a) In recognition that project construction work done on State property will not be directly funded and paid by State, for the purpose of protecting stop notice claimants and the interests of State relative to successful project completion, the local public agency Permittee agrees to require the construction contractor to furnish both a payment and performance bond in the local public agency's name with both bonds complying with the requirements set forth in Section 3-1.05 Contract Bonds of the Department's Standard Specifications before performing any project construction work.
    b) The local public agency Permittee must defend, indemnify, and hold harmless the State and the Department, and the Directors, officers, and employees of the State and/or Department, from all project construction related claims by contractors, subcontractors, and suppliers, and from all stop notice and/or mechanic's lien claimants. The local public agency also agrees to remedy, in a timely manner and to the Department's satisfaction, any latent defects occurring as a result of the project construction work.
25. **FUTURE MOVING OF INSTALLATIONS:** Permittee understands and agrees to relocate a permitted installation upon notice by the Department. Unless under prior property right or agreement, the Permittee must comply with said notice at the Permittee's sole expense.
26. **ENVIRONMENTAL:**
    a) ARCHAEOLOGICAL/HISTORICAL: If any archaeological or historical resources are identified or encountered in the work vicinity, the Permittee must immediately stop work, notify the Department's representative, retain a qualified archaeologist who must evaluate the site at Permittee's expense, and make recommendations to the Department's representative regarding the continuance of work.
    b) HAZARDOUS MATERIALS: If any hazardous waste or materials (such as underground storage tanks, asbestos pipes, contaminated soil, etc.) are identified or encountered in the work vicinity, the Permittee must immediately stop work, notify the Department's representative, retain a qualified hazardous waste/material specialist who must evaluate the site at Permittee's expense, and make recommendations to the Department's representative regarding the continuance of work.
    Attention is directed to potential aerially deposited lead (ADL) presence in unpaved areas along highways. It is the Permittee's responsibility to take all appropriate measures to protect workers in conformance with California Code of Regulations Title 8, Section 1532.1, "Lead," and with Cal-OSHA Construction Safety Orders, and to ensure roadway soil management is in compliance with Department of Toxic Substances Control (DTSC) requirements.
27. **PREVAILING WAGES:** Work performed by or under an encroachment permit may require Permittee's contractors and subcontractors to pay appropriate prevailing wages as set by the California Department of Industrial Relations. Inquiries or requests for interpretations relative to enforcement of prevailing wage requirements must be directed to the California Department of Industrial Relations.
28. **LIABILITY, DEFENSE, AND INDEMNITY:** The Permittee agrees to indemnify and save harmless the State, the Department, and the Directors, officers, employees, agents and/or contractors of the State and/or of the Department, including but not limited to the Director of Transportation and the Deputy Directors, from any and all claims, demands, damages, costs, liability, suits, or actions of every name, kind, and description, including but not limited to those brought for or on account of property damage, invasion of privacy, violation or deprivation of a right under a state or federal law, environmental damage or penalty, or injury to or death of any person including but not limited to members of the public, the Permittee, persons employed by the Permittee, and/or persons acting on behalf of the Permittee, arising out of or in connection with: (a) the issuance and/or use of this encroachment permit; and/or (b) the encroachment, work, and/or activity conducted pursuant to this encroachment permit, or under color of authority of this encroachment permit but not in full compliance with the Permit Conditions as defined in General Provision Number 5 ("Unauthorized Work or Activity"); and/or (c) the installation, placement, design, existence, operation, and/or maintenance of the encroachment, work, and/or activity; and/or (d) the failure by the Permittee or anyone acting on behalf of the Permittee to perform the Permittee's obligations under any part of the Permit Conditions as defined in General Provision Number 5, in respect to maintenance or any other obligation; and/or (e) any change to the Department's property or adjacent property, including but not limited to the features or conditions of either of them, made by the Permittee or anyone acting on behalf of the Permittee; and/or (f) a defect or obstruction related to or caused by the encroachment, work, and/or activity whether conducted in compliance with the Permit Conditions as defined in General Provision Number 5 or constituting Unauthorized Work or Activity, or from any cause whatsoever. The duty

© 2018 California Department of Transportation. All Rights Reserved.

of the Permittee to indemnify and save harmless includes the duties to defend as set forth in Section 2778 of the Civil Code.

It is the intent of the parties that except as prohibited by law, the Permittee will defend, indemnify, and hold harmless as set forth in this General Provision Number 28 regardless of the existence or degree of fault or negligence, whether active or passive, primary or secondary, on the part of: the State; the Department; the Directors, officers, employees, agents and/or contractors of the State and/or of the Department, including but not limited to the Director of Transportation and the Deputy Directors; the Permittee; persons employed by the Permittee; and/or persons acting on behalf of the Permittee.

The Permittee waives any and all rights to any type of expressed or implied indemnity from or against the State, the Department, and the Directors, officers, employees, agents, and/or contractors of the State and/or of the Department, including but not limited to the Director of Transportation and the Deputy Directors.

The Permittee understands and agrees to comply with the obligations of Titles II and III of the Americans with Disabilities Act in the conduct of the encroachment, work, and/or activity whether conducted pursuant to this encroachment permit or constituting Unauthorized Work or Activity, and further agrees to defend, indemnify, and save harmless the State, the Department, and the Directors, officers, employees, agents, and/or contractors of the State and/or of the Department, including but not limited to the Director of Transportation and the Deputy Directors, from any and all claims, demands, damages, costs, penalties, liability, suits, or actions of every name, kind, and description arising out of or by virtue of the Americans with Disabilities Act.

The Permittee understands and agrees the Directors, officers, employees, agents, and/or contractors of the State and/or of the Department, including but not limited to the Director of Transportation and the Deputy Directors, are not personally responsible for any liability arising from or by virtue of this encroachment permit.

For the purpose of this General Provision Number 28 and all paragraphs herein, “contractors of the State and/or of the Department” includes contractors and their subcontractors under contract to the State and/or the Department.

This General Provision Number 28 and all paragraphs herein take effect immediately upon issuance of this encroachment permit, and apply before, during, and after the encroachment, work, and/or activity contemplated under this encroachment permit, whether such work is in compliance with the Permit Conditions as defined in General Provision Number 5 or constitutes Unauthorized Work or Activity, except as otherwise provided by California law. The Permittee’s obligations to defend, indemnify, and save harmless under this General Provision Number 28 take effect immediately upon issuance of this encroachment permit and have no expiration date, including but not limited to situations in which this encroachment permit expires or is revoked, the work or activity performed under this encroachment permit is accepted or not accepted by the Department, the encroachment, work, and/or activity is conducted in compliance with the Permit Conditions as defined in General Provision Number 5 or constitutes Unauthorized Work or Activity, and/or no work or activity is undertaken by the Permittee or by others on the Permittee’s behalf.

29. **NO PRECEDENT ESTABLISHED:** This encroachment permit is issued with the understanding that it does not establish a precedent.
30. **FEDERAL CIVIL RIGHTS REQUIREMENTS FOR PUBLIC ACCOMMODATION:**
    a) As part of the consideration for being issued this encroachment permit, the Permittee, on behalf of Permittee and on behalf of Permittee’s personal representatives, successors in interest, and assigns, does hereby covenant and agree that:
        i) No person on the grounds of race, color, or national origin may be excluded from participation in, be denied the benefits of, or be otherwise subjected to discrimination in the use of said facilities.
        ii) That in connection with the construction of any improvements on said lands and the furnishings of services thereon, no discrimination must be practiced in the selection and retention of first-tier subcontractors in the selection of second-tier subcontractors.
        iii) That such discrimination must not be practiced against the public in their access to and use of the facilities and services provided for public accommodations (such as eating, sleeping, rest, recreation), and operation on, over, or under the space of the State highway right-of-way.
        iv) That the Permittee must use the premises in compliance with all other requirements imposed pursuant to Title 15, Code of Federal Regulations, Commerce and Foreign Trade, Subtitle A. Office of the Secretary of Commerce, Part 8 (15 C.F.R. Part 8) and as said Regulations may be amended.
    b) That in the event of breach of any of the above nondiscrimination covenants, the State and the Department have the right to terminate this encroachment permit and to re-enter and repossess said land and the facilities thereon and hold the same as if said permit had never been made or issued.
31. **MAINTENANCE OF HIGHWAYS:** By accepting this encroachment permit, the Permittee agrees to properly maintain any encroachment. This assurance requires the Permittee to provide inspection and repair any damage, at Permittee’s expense, to State facilities resulting from the encroachment.
32. **SPECIAL EVENTS:** In accordance with subdivision (a) of Streets and Highways Code section 682.5 and 682.7, the Department is not responsible for the conduct or

© 2018 California Department of Transportation. All Rights Reserved.

operation of the permitted activity, and the applicant agrees to defend, indemnify, and hold harmless the State, the Department, and the Directors, officers, employees, agents, and contractors of the State and/or of the Department, including but not limited to the Director of Transportation and the Deputy Directors, from any and all claims, demands, damages, costs, liability, suits, or actions of every name, kind and description arising out of any activity for which this encroachment permit is issued.

The Permittee is required, as a condition of this encroachment permit, for any event that awards prize compensation to competitors in gendered categories, for any participant level that receives prize compensation, to ensure the prize compensation for each gendered category is identical at each participant level. (Streets and Highways Code, section 682.7.)

The Permittee understands and agrees to comply with the obligations of Titles II and III of the Americans with Disabilities Act in the conduct of the event, and further agrees to defend, indemnify, and save harmless the State and the Department, and the Directors, officers, and employees of the State and/or Department, including but not limited to the Director of the Department and the Deputy Directors, from any and all claims, demands, damages, costs, liability, suits, or actions of every name, kind and description arising out of or by virtue of the Americans with Disabilities Act.

33. **PRIVATE USE OF STATE HIGHWAY RIGHT-OF-WAY:** State highway right-of-way must not be used for private purposes without compensation to the State. The gifting of public property uses and therefore public funds is prohibited under the California Constitution, Article XVI, Section 6.
34. **FIELD WORK REIMBURSEMENT:** Permittee must reimburse the Department for field work performed on Permittee's behalf to correct or remedy hazards or damaged facilities, or to clear refuse, debris, etc. not attended to by the Permittee.
35. **LANE CLOSURE REQUEST SUBMITTALS AND NOTIFICATION OF CLOSURES TO THE DEPARTMENT:** Attention is directed to Section 12-4.02A(3) Submittals, of the Department's Standard Specifications, for lane closure requests submittals requirements and schedules. The Permittee must notify the Department's representative and the Traffic Management Center (TMC) before initiating a lane closure or conducting an activity that may cause a traffic impact. In emergency situations when the corrective work or the emergency itself may affect traffic, the Department's representative and the TMC must be notified as soon as possible.
36. **SUSPENSION OF TRAFFIC CONTROL OPERATION:** The Permittee, upon notification by the Department's representative, must immediately suspend all lane closure operations and any operation that impedes the flow of traffic. All costs associated with this suspension must be borne by the Permittee.
37. **UNDERGROUND SERVICE ALERT (USA) NOTIFICATION:** Any excavation requires compliance with the provisions of Government Code section 4216 et. seq., including but not limited to notice to a regional notification center, such as Underground Service Alert (USA). The Permittee must provide notification to the regional notification center at least forty-eight (48) hours before performing any excavation work within the State highway right-of-way.
38. **COMPLIANCE WITH THE AMERICANS WITH DISABILITIES ACT (ADA):** All work within the State highway right-of-way to construct and/or maintain any public facility must be designed, maintained, and constructed strictly in accordance with all applicable Federal Access laws and regulations (including but not limited to Section 504 of the Rehabilitation Act of 1973, codified at 29 U.S.C. § 794), California Access laws and regulations relating to ADA, along with its implementing regulations, Title 28 of the Code of Federal Regulations Parts 35 and 36 (28 C.F.R., Ch. I, Part 35, § 35.101 et seq., and Part 36, § 36.101 et seq.), Title 36 of the Code of Federal Regulations Part 1191 (36 C.F.R., Ch. XI, Part 1191, § 1119.1 et seq.), Title 49 of the Code of Federal Regulations Part 37 (49 C.F.R., Ch. A, Part 37, § 37.1 et seq.), the United States Department of Justice Title II and Title III for the ADA, and California Government Code section 4450 et seq., which require public facilities be made accessible to persons with disabilities.

    Notwithstanding the requirements of the previous paragraph, all construction, design, and maintenance of public facilities must also comply with the Department's Design Information Bulletin 82, "Pedestrian Accessibility Guidelines for Highway Projects."
39. **STORMWATER:** The Permittee is responsible for full compliance with the following:
    a) For all projects, the Department's Storm Water Program and the Department's National Pollutant Discharge Elimination System (NPDES) Permit requirements under Order No. 2012-0011-DWQ, NPDES No CAS000003; and
    b) In addition, for projects disturbing one acre or more of soil, with the California Construction General Permit Order No. 2009-0009-DWQ, NPDES No CAS000002; and
    c) In addition, for projects disturbing one acre or more of soil in the Lahontan Region with Order No. R6T-2016-0010, NPDES No CAG616002.
    d) For all projects, it is the Permittee's responsibility to install, inspect, repair, and maintain all facilities and devices used for water pollution control practices (Best Management Practices/BMPs) before performing daily work activities.

© 2018 California Department of Transportation. All Rights Reserved.

FILMING - ACCIDENT RECONSTRUCTION

In addition to the attached General Provisions (TR-0045), the following special provisions are also applicable:

1. Permittee shall strictly comply with conditions of this permit. Minor variations require written Caltrans' State Representative approval; changes require a Caltrans Permit Rider.
2. Caltrans State representative or CHP may stop work not being performed in strict compliance with conditions of this permit.
3. UNLESS SPECIFICALLY ALLOWED IN THIS PERMIT, WETTING ROADWAYS IS STRICTLY PROHIBITED.
4. UNLESS SPECIFICALLY ALLOWED IN THIS PERMIT, TRAFFIC SHALL NOT BE DETOURED.
5. UNLESS SPECIFICALLY ALLOWED IN THIS PERMIT, STAGED ACCIDENTS, AND PYROTECHNICS ARE STRICTLY PROHIBITED.
6. Road closures and detours, if specifically allowed in this permit, require state specification advance warning signs and traffic control devices provided and installed to Caltrans standards by qualified private traffic control companies.
7. Traffic control activities shall be approved by Caltrans' State Representative prior to institution.
8. Accident reconstruction filming involving aircraft shall be done in strict compliance with FAA regulations.
9. When filming or photography is permitted, stationary cameras adjacent to roadways open to public traffic, shall be located at least 10' from edge of pavement or at least 2' behind curb face on raised sidewalks. Cameras shall NOT be allowed in medians of roadways open to public traffic. At locations of fixed cameras, Permittee' s staff shall not exceed four persons.
10. On freeways, permittee's personnel, vehicles, and equipment not involved in the permitted activities shall be legally located outside freeway right of way.
11. On conventional highways open to public traffic, permittee's personnel, vehicles, and equipment not involved in the permitted activities, shall be legally located off the traveled way and not interfere with free traffic and pedestrian flow.
12. Highway operational problems require immediate cessation of permitted activities.
13. When filming or photography is permitted, lighting fixtures, mirrors, reflectors, and supports shall be placed to not present a glare or safety hazard.
14. Permittee equipment situated on sidewalks open to public, or interfering with pedestrians, shall be provided with devices for pedestrian protection.
15. Permittee vehicles operating in public traffic shall conform to California vehicle code.
16. Well functioning communications equipment shall be supplied by Permittee in sufficient quantity for all organizations involved.

© 2018 California Department of Transportation. All Rights Reserved.

FILMING - AIRCRAFT, PYROTECHNICS, STUNTS, ETC. (FS)

In addition to the attached General Provisions (TR-0045), the following special provisions are also applicable:

1. The Permit Inspector or the CHP has the authority to stop any or all work that is not being performed in strict compliance with the provisions of this permit.
2. Traffic shall not be detoured from the State Highway without the written approval of the Permit Engineer.
3. Any filming involving the use of any type aircraft shall be done in accordance with FAA regulations.
4. All approved closures shall be done by a qualified traffic control contractor (retained by the Permittee) using current State Specifications and Standards.
5. Well functioning communications equipment shall be supplied by the Permittee in sufficient quantity for all parties involved in the activity.
6. Operational decisions and/or emergency situations may require the roadway to be reopened immediately. This decision may be made by either the CHP or the Permit Engineer.
7. Film company vehicles, personnel, camera and equipment shall be parked at least 30' from the edge of roadway unless protected by existing barriers.
8. A maximum of four (4) persons associated with the filming company will be allowed at fixed camera locations.
9. Stopping or slowing vehicles being filmed on the highway shall not be allowed.
10. Wetting of the roadway is prohibited.

© 2018 California Department of Transportation. All Rights Reserved.

FILMING - INTERMITTENT TRAFFIC CONTROL (FI)

In addition to the attached General Provisions (TR-0045), the following special provisions are also applicable:

1. Permittee shall comply with this permit. Permit conditions shall not be modified without a Caltrans permit rider.
2. Permittee shall provide signs and equipment for traffic control conforming to the attached plan at permittee expense.
3. The CHP officer in charge shall be present at initiation of permit authorized filming operations.
4. Wetting roadways is prohibited.
5. Traffic shall not be detoured.
6. Stunts, staged accidents, and pyrotechnics are strictly prohibited.
7. Filming involving aircraft flying over state highways at an altitude of 500 feet or less is prohibited.
8. Specific camera locations require on site approval by CHP officer in charge.
9. Stationary cameras shall be mounted at least 10' from edge of pavement or at least 2' behind curb face on raised sidewalks. Unless specifically allowed in this permit cameras shall not be in medians.
10. Permittee's personal vehicles and equipment shall be legally located off the traveled way and not interfere with free traffic or pedestrian flow.
11. Highway operational problems may require immediate cessation of permitted activities.
12. Intermittent traffic breaks normally not to exceed five minutes duration, are approved by the CHP officer in charge, and provided by uniformed peace officers in marked law enforcement vehicles.
13. Permitted lighting fixtures, mirrors, reflectors, and supports shall not present a glare or other safety hazard.
14. Permittee equipment situated on sidewalks or interfering with pedestrians shall be provided with devices for pedestrian protection.
15. Vehicles with lights or cameras mounted or attached that, in the opinion of the CHP officer in charge, interfere with the driver's view, shall be legally towed with a drawbar.
16. Filmed vehicles used in filming dialogue between driver and passenger shall be legally towed with a drawbar.
17. Properly functioning communications equipment shall be supplied by permittee in sufficient quantity for all organizations involved.

© 2018 California Department of Transportation. All Rights Reserved.

FILMING - NO MOVING TRAFFIC (FO)

In addition to the attached General Provisions (TR-0045), the following special provisions are also applicable:

1. The Permit Inspector or the CHP has the authority to stop any or all work that is not being performed in strict compliance with the provisions of this permit.
2. Traffic shall not be detoured from the State highway without the written approval of the Permit Engineer.
3. All of the permittee's production vehicles and equipment shall be legally parked off the traveled way so that the equipment and personnel do not interfere with the free flow of traffic and/or pedestrians.
4. Any filming involving the use of any type aircraft shall be done in accordance with FAA regulations.
5. All cables and step extensions that cross the sidewalk shall be shielded or coned for pedestrian traffic.
6. On conventional highways, stationary cameras shall be mounted
7. In a position at least 10' from the edge of pavement or at least 2' behind curb face on raised sidewalks. Cameras will not be allowed on the raised median.
8. No lights shall be erected on the traveled way.
9. The location of camera within the right of way shall be approved by the State's representative.
10. Intermittent traffic breaks [not to exceed three (3) minutes] shall be approved and provided by the CHP.
11. Well functioning communications equipment shall be supplied by the permittee in sufficient quantity for all organizations involved in the event.
12. Wetting of the roadway is prohibited.

© 2018 California Department of Transportation. All Rights Reserved.

FILMING - TRAFFIC CONTROL (FL)

In addition to the attached General Provisions (TR-0045), the following special provisions are also applicable.

1. The permit Inspector or the CHP has the authority to stop any or al work that is not being performed in strict compliance with the provisions of this permit.
2. Traffic shall not be detoured from the State Highway without the written approval of the Permit Engineer.
3. All of the permittee's production vehicles and equipment shall be legally parked off the traveled way so that the equipment and personnel do not interfere with the free flow of traffic and/or pedestrians.
4. Any filming involving the use of any type aircraft shall be done in accordance with the FAA regulations.
5. On conventional highways, stationary cameras shall be mounted in a position at least 10' from the edge of pavement or on raised sidewalks. Cameras will not be allowed on the raised median.
6. Traffic control shall not exceed three (3) minutes duration.
7. Intermittent traffic breaks (not to exceed three (3) minutes) shall be approved and provided by the CHP.
8. Any vehicle involved in filming dialogue between the driver and someone else shall be legally towed with a tow bar.
9. Any vehicle that has lights and/or cameras mounted or attached, that in the opinion of either Caltrans or the CHP interferes with the driver's view, shall be legally towed with a tow bar.
10. All traffic control shall be approved through the State's representative and/or the CHP prior to filming.
11. Any vehicles in public traffic including camera truck and towed picture car or camera truck and separate picture cars must conform to the California Vehicle Code requirement while filming. A CHP officer must be in attendance during the filming.
12. Well functioning communications equipment shall be supplied by the permittee in sufficient quantity for all organizations involved in the event.
13. Wetting of the roadway is prohibited.

© 2018 California Department of Transportation. All Rights Reserved.

FILMING - WETDOWN

TR-0169 (NEW 3/95)

In addition to the attached General Provisions (TR-0045), the following special provisions are also applicable.

1. Traffic control for wetdowns shall be in conformance with the Department of Transportation Standard Plans T10, T11, T12, T13, or T14, whichever is applicable.
2. Placement of signs shall be far in advance of the work site, to accommodate the backup queue of traffic when traffic is stopped for filming purposes. These traffic breaks should not exceed five (5) minutes at each given occurrence.
3. Placement of "Wet Pavement Ahead" signs, 48" x 48" black lettering on an orange background, shall be required at all wetdown worksites. These signs are required to meet Caltrans requirements for lettering size and made by a recognized sign manufacturer. Placement of these signs shall be in succession of the "Road Work Ahead" sign (C-18), in both directions of traffic.
4. When traffic control is to be maintained by law enforcement officers (i.e. C.H.P., P.D. , or S.O.), a minimum of 3 officers is normally required, (flaggers may not be required). Officers and their vehicles would be utilized in lieu of flaggers.
5. When traffic control safety devices are required (i.e. signs, cones, lights), placement of these devices shall be installed by a recognized traffic control contractor.
6. If it is determined by Caltrans and C.H.P. that flaggers are required, the traffic control contractor shall supply or utilize his employees as the flaggers.
7. Caltrans and C.H.P. reserve the right to require the reopening of the highway at any given time as may be necessary. All cost shall be borne by the permittee.
8. C.H.P. will be present during all wetdown filming operations. For safety purposes C.H.P. will determine when traffic is allowed over wetdown area.
9. In the event of an adverse condition or incident that would require the response of Caltrans Traffic Management Team, this permit operation will be terminated.
10. No wetdown will be allowed if there is a possibility of creating a ponding situation and/or flooding of the highway.
11. Placement and time of the wetdown will be determined by Caltrans.

© 2018 California Department of Transportation. All Rights Reserved.

HAZARDOUS MATERIALS AND HAZARDOUS WASTE MANAGEMENT

TR-0408 (New 09/2017)

By acceptance of this encroachment permit, Permittee hereby agrees that:

1. All construction debris/materials/water/excess soil must become the property of the Permittee, and must be transported and disposed of, outside of Caltrans' right-of-way, in accordance with all applicable environmental laws and regulations. The Permittee must be identified as the generator for all construction debris/materials/water/excess soil and must be responsible for proper identification (including sampling and analysis) and management of all construction and contaminated debris/materials/water/excess soil that are removed, and/or excavated, from the work site. If hazardous waste is generated, the Permittee must obtain an Environmental Protection Agency (EPA) Identification Number issued in their name. State Permit Inspector does not sign any manifests or shipping papers. The Permittee must be named as the generator on all Uniform Hazardous Waste Manifests and shipping papers. Caltrans must not be identified or written anywhere on the manifests or shipping papers. Prior to waste disposal, the Permittee should submit the waste generator form(s) to State Permit Inspector for verification. The Permittee must submit to the State Permit Inspector, a copy of all manifests and/or shipping papers generated for materials removed, transported and/or excavated from the state right-of-way.
2. If contaminated material is encountered, Permittee is to stop work and contact the State Permit Inspector immediately. The Permittee must submit a Sampling and Analysis Plan (SAP), and a Health and Safety Plan (HaSP) prepared by a Certified Industrial Hygienist (CIH) and in conformance with California Code of Regulations title 8, section 5192, "Hazardous Waste Operations and Emergency Response" for sampling activity through a separate permit application. Upon the permit review, additional environmental documents may be required prior to resumption of construction activity.
3. Permittee is responsible for any violation, penalty, enforcement action, corrective action, remedial action, and any other type of consequences resulting from cross contamination of groundwater (including perched groundwater), improper handling/managing of hazardous materials and/or placement of contaminated materials inside Caltrans right-of-way.
4. It is the Permittee's responsibility to comply with the Department of Toxic Substances Control (DTSC) ADL requirements for roadway soil management. Reuse of soils containing greater than 80 mg/kg total lead is not allowed without written approval of the DTSC and Caltrans. The Soil Management Agreement for Aerially Deposited Lead-Contaminated Soils between Caltrans and the DTSC does not constitute written approval for the Permittee to reuse soils containing greater than 80 mg/kg total lead.
5. The Permittee must implement the emergency notification requirements established in the California Office of Emergency Management Hazardous Materials, Spill / Release Notification Guidance (http://www.caloes.ca.gov/).
6. Any imported material used for backfill must be free of contamination, and a certificate of the material as "clean" with the source area of the material must be provided to Permit Inspector upon request. Importing soils containing greater than 80 mg/kg total lead for use in state right-of-way is not allowed.

   Stockpiles of material containing aerially deposited lead shall not be placed where affected by surface run-on or run-off. Stockpiles shall be covered with plastic sheeting 13 mils minimum thickness or with one foot of nonhazardous material. Stockpiles shall not be placed in environmentally sensitive areas. Stockpiled material shall not enter storm drains, inlets, or waters of the State.

© 2018 California Department of Transportation. All Rights Reserved.

LAW ENFORCEMENT SURVEILLANCE DEVICES

TR-0409 (New 01/2018)

In addition to the attached General Provisions (TR-0045), the following special provisions are also applicable:

1. The permittee must comply with all applicable state and federal laws with respect to all activities relating to this encroachment permit. This includes, but is not limited to, Law Enforcement Surveillance Devices (LESD) and the data collected by LESD.

2. The following statement is added between the first and second paragraphs of section 28 of the "Encroachment Permit General Provisions" (TR-0045):

   "The permittee agrees to indemnify and save harmless the State, the Department, and all Directors, officers, employees, agents and/or contractors of the State and/or of the Department, including but not limited to the Director of Transportation and the Deputy Directors, from any and all claims, demands, damages, costs, liability, suits, or actions of every name, kind and description arising from any and all alleged violations of State and/or Federal law with respect to any and all activities relating to this encroachment permit, including, but not limited to, invasion of privacy, section 1983 of title 42 of the United States Code, and the Fourth Amendment to the United States Constitution, and regardless of whether such are brought by or on behalf of any entity or natural person including but not limited to members of the public, the permittee, persons employed by the permittee, and persons acting on behalf of the permittee, arising out of or in connection with: (a) the issuance and/or use of this encroachment permit, and/or (b) the work or other activity conducted pursuant to this encroachment permit, and/or (c) the installation, placement, subsequent operation, and/or maintenance of said encroachment, and/or (d) the failure by the permittee or anyone acting on behalf of the permittee to perform permittee's obligations under this encroachment permit in respect to maintenance or any other obligation, and/or (e) a defect or defects in the work, or obstructions related to the work, or from any cause whatsoever. The duty of the permittee to indemnify and save harmless includes the duties to defend as set forth in Section 2778 of the California Civil Code."

3. Upon termination of surveillance activities, permittee must notify the Department's District Permits Office in writing within 30 days, and remove all LESD infrastructure from the Department's highway rights-of-way. If the permittee fails to comply, the Department may remove the LESD system and the permittee must reimburse the Department for all the associated cost of removal and storage.

© 2018 California Department of Transportation. All Rights Reserved.

MAIL BOX (MB)

In addition to the attached General Provisions (TR-0045), the following special provisions are also applicable:

I. LOCATION

1. Whenever possible, mailboxes shall be located outside State highway right of way (R/W).
2. Mailboxes may be located inside State Highway right of way in compliance with the current AASHTO's "Roadside Design Guide", Chapter 11 "Erecting Mailboxes on Streets and Highways". (A copy can be found in Appendix H of the Encroachment Permits Manual)
3. Coordination with the local postmaster is required to determine the exact site.
4. In areas were curbs or dikes exist, mailboxes shall be located no closer than l' behind the face of curb or dike to face of box.

II. INSTALLATION

1. Installation shall be as shown in the current AASHTO's "Roadside Design Guide".
2. Mailboxes supported by structures such as masonry columns, railroad rails and ties, tractor wheels, plow blades, concrete filled barrels are strictly prohibited.
3. Postmaster approved, neighborhood delivery and collection box units (NDCBU) shall be installed in a location where they will not pose a hazard to errant vehicles.
4. Request for exceptions must follow the exception process described in Chapter 300 of the Encroachment Permits Manual.

© 2018 California Department of Transportation. All Rights Reserved.

NOTIFICATION OF ENCROACHMENT

When highway or ramp closures, detours, and work with significant traffic impacts occur, use paragraphs 1, 2, and 3. Additional possible impacted activities include: CD, MC, FL, and FS permits.

In addition to the attached General Provisions (TR-0045), the following special provisions are also applicable:

Media Notification for Special Events (SE):

1. Permittee shall verify to State's representative that local or regional media, including radio, television or newspapers serving the area affected by the special event, have been notified by letter or press release format. Media contact must allow sufficient time for print or broadcast two days prior to the permitted activity. Letter or press release shall include date, time, location, duration, permitted activity, and identify detours for impacted State highways and local roads.

Highway Signing for Special Events (SE):

Public Notification Signs

2. Permittee shall place public notification signs at locations designated on the approved signing plan a minimum of seven (7) calendar days before the activity begins. Signs shall be constructed and installed to Caltrans specifications and standards.

   Detour Signs

3. Permittee shall place detour signs prior to the permitted activity in accordance with State Standard Specifications.

When encroachment activities create significant traffic impacts, used paragraph 4 for local agency notification. Possible impacted activities include: SE, CD, MC, FL, and FS permits.

Local Agency Notification

4. Permittee shall make written notice to, and coordinate with, local emergency services, law enforcement agencies and public road departments seven (7) calendar days prior to the scheduled permitted activity. Letter copies shall be provided to the State's representative to evidence contacts.

When special event (SE) encroachments create significant traffic impacts use paragraph 5 for CHP notification.

CHP Notification

5. Permittee shall make written notice to, and coordinate with, CHP seven (7) calendar days before encroachment activities are scheduled. Letter copies shall be provided to the State's representative to evidence contacts.

© 2018 California Department of Transportation. All Rights Reserved.

PEDESTRIAN SAFETY (MCP)

In addition to the attached General Provisions (TR-0045), the following special provisions are also applicable:

1. When the work area encroaches upon a sidewalk, walkway, or crosswalk area, special consideration must be given to pedestrian safety. Protective barricades, fencing, handrails and bridges, together with warning and guidance devices and signs must be utilized so that the passageway for pedestrians, especially blind and other physically handicapped, is safe and well defined and shown on the approved permit plan.
2. Pedestrian walkways and canopies within State Right of Way shall comply with the requirements of the applicable local agency or of the latest edition of the Uniform Building Code whichever contains the higher standards.

© 2018 California Department of Transportation. All Rights Reserved.

RAILROAD GRADE CROSSING - MAINTENANCE (RX)
Annual Maintenance

In addition to the attached General Provisions (TR-0045), the following special provisions are also applicable:

1. This permit does not authorize work on freeways, expressways or other activities not specifically provided for in this permit.
2. Work that reduces the vertical clearance over highways or changes the load carrying capacity of structures is not authorized by this permit.
3. Railroad work shall conform to Railroad, and applicable California Public Utilities Commission standards. Work affecting State highway facilities shall conform to current Caltrans standards.
4. Permittee may control or alter the flow of highway traffic only if absolutely necessary for public safety or to prevent a serious interruption of railroad service. Traffic control shall conform to Caltrans Traffic Control Systems published in the current State Standard Plans.
5. No excavation within 30' of the traveled way shall be left open after daylight hours, unless specifically authorized and adequate protection of traffic is provided in accordance with the General Provisions "Protection of Traffic." Backfill and highway paving shall conform to Standard Specifications and the General Provisions.
6. Routine maintenance taking place from the State highway shall be conducted between 9 am and 3 p.m. or as directed by the State representative.
7. Methods of installation and time of work for replacing aerial lines for railroad communication shall be approved by the State representative.

© 2018 California Department of Transportation. All Rights Reserved.

ROLLING TRAFFIC BREAKS

TR-0407 (Rev 10/2017)

In addition to the attached General Provisions (TR-0045), the following special provisions are also applicable:

1. Permittee must arrange a meeting with the California Highway Patrol (CHP) and the Caltrans permit inspector, at least two (2) weeks prior to the start of work in order to determine the appropriate number of CHP vehicles required for planned traffic breaks. A minimum of two (2) CHP vehicles in each direction are required. One CHP vehicle will be conducting the planned traffic break and the second CHP vehicle will be stationed on the shoulder with its rear emergency lights on to caution motorists at the end of the queue. Additional CHP vehicles may be required if determined to be necessary by the CHP. It is the responsibility of the permittee to make arrangements with CHP for providing planned traffic breaks to facilitate the approved work.
2. The duration of a planned traffic break MUST NOT exceed five (5) minutes. If additional traffic breaks are required, traffic backup must be cleared before performing another break.
3. The permittee must provide a minimum of one (1) Portable Changeable Message Sign (PCMS). Additional PCMSs must be provided if required by Caltrans permit inspector or CHP. PCMS(s) must be placed at the locations directed by the CHP and be moved or relocated as needed. Each PCMS must comply with section 12-3.32 of the Caltrans Standard Specifications. PCMS(s) must be removed promptly after the planned traffic break is completed.
4. Message to be displayed on the PCMSs must be coordinated with Caltrans permit inspector/representative and CHP.
5. All aerial crossings should be scheduled on Sunday mornings (excluding holidays), from daylight to 10:00 AM, unless otherwise authorized by the District Permit Engineer or authorized Caltrans' representative.
6. No aerial crossings must be performed in rainy, foggy or other inclement weather.

© 2018 California Department of Transportation. All Rights Reserved.

SIDEWALKS (CS)

In addition to the attached General Provisions (TR-0045), the following special provisions are also applicable:

1. A State issued permit is required for any landscaping or tree installation, including installation of tree wells.
2. A separate permit must be obtained from Caltrans for any driveway, handicap-ramp installations or any sidewalks that are other than Portland Cement Concrete constructed in compliance with Caltrans Standard Specifications.
3. Traffic control is authorized only between 9 am and 3 p.m., Monday through Friday, holidays excluded. Any traffic control that requires lane closure shall be in compliance with the appropriate traffic control plan. Where required by the plan, the use of a flashing arrowboard is MANDATORY.
4. New curb and gutter installations shall be State Standard Type A2-6, unless necessary to conform to existing adjacent curb and gutter installations.
5. The minimum width of a sidewalk should be 8 feet between a curb and a building when in urban and rural main street place types. For all other locations the minimum width of sidewalk should be 6 feet when contiguous to a curb or 5 feet when separated by a planting strip.
6. Alignment and grade of gutter and sidewalk shall match the existing.
7. Existing concrete curb and paved shoulder shall be saw cut to a neat line prior to excavating and forming. Existing concrete sidewalk shall be saw cut at the scoreline. Paved shoulder shall be replaced with asphalt concrete paving material equal "in kind" and thickness to existing shoulder and shall conform to lip of new curb and gutter.
8. Permittee shall be responsible for the relocation or adjustment of any utility required as the result of work authorized by this permit, and utility relocation shall be completed prior to the installation of any new curb, gutter or sidewalk.
9. A monolithic pour of sidewalk and curb and gutter shall not be permitted.

© 2018 California Department of Transportation. All Rights Reserved.

STEEL PLATE BRIDGING UTILITY

TR -0157 (Rev. 04/2018)

To accommodate excavation work, steel plate bridging may be necessary. All conditions for use of steel plate bridging should be set forth in the special provisions.

Consideration of steel plate bridging should take into account the following factors:

1. Traffic speed.
2. Traffic Volume and Composition.
3. Duration and dimensions (width & daily estimated lengths) of the proposed excavation.
4. Weather conditions.

When backfilling operations of an excavation in the traveled way, whether transverse or longitudinal, cannot be properly completed within a work day, steel plate bridging with a non-skid surface and shoring (see Trenching & Shoring) may be required to preserve unobstructed traffic flow. In such cases, the following conditions shall apply:

1. Steel plate bridging on freeways is not allowed.
2. Steel plates used for bridging must extend a minimum of 12" beyond the edges of the trench.
3. Steel plate bridging shall be installed to operate with minimum noise.
4. The trench shall be adequately shored, (as mentioned in Section 603.6B-2 of the Encroachment Permits Manual) to support the bridging and traffic loads.
5. Temporary paving with cold asphalt concrete shall be used to feather the edges of the plates, if plate installation by Method (2) described below, is used.
6. Bridging shall be secured against displacement by using adjustable cleats, shims, or other devices.

As required by the district, steel plate bridging and shoring shall be installed using either Method (1) or (2):

Method 1 For speeds of 45 MPH or greater:

The pavement shall be cold planed to a depth equal to the thickness of the plate and to a width and length equal to the dimensions of the plate.

Approach plate(s) and ending plate (if longitudinal placement) shall be attached to the roadway by a minimum of 2 dowels pre-drilled into the corners of the plate and drilled 2" into the pavement. Subsequent plates are to be butted and tack welded to each other.

Method 2 For Speeds less than 45 mph:

Approach plate(s) and ending plate (if longitudinal placement) shall be attached to the roadway by a minimum of 2 dowels pre-drilled into the corners of the plate and drilled 2" into the pavement. Subsequent plates are to be butted and tack welded to each other. Fine graded asphalt concrete shall be compacted to form ramps, maximum slope 8.5 % with a minimum 12" taper to cover all edges of the steel plates. When steel plates are removed, the dowel holes in the pavement shall be backfilled with either graded fines of asphalt concrete mix, concrete slurry, epoxy or an equivalent that is satisfactory to the Caltrans' representative.

The permittee is responsible for maintenance of the steel plates, shoring, asphalt concrete ramps, and ensuring that they meet minimum specifications. Unless specifically noted or granted in the special provisions, or approved by the State representative, steel plate bridging shall not exceed 4 consecutive working days in any given week. Backfilling of excavations shall be covered with a minimum 3" temporary layer of cold asphalt concrete.

The following table shows the advisory minimal thickness of steel plate bridging required for a given trench width (A-36 grade steel, designed for HS20-44 truck loading per Caltrans Bridge Design Specifications Manual).

Trench Width	Minimum Plate Thickness
10”	½”
1’-11”	¾”
2’-7”	7/8”
3’-5”	1”
5’-3”	1 ¾”

NOTE: For spans greater than 5'-3", a structural design shall be prepared by a California registered civil engineer.

All steel plates within the right of way whether used in or out of the traveled way shall be without deformation. Inspectors can determine the trueness of steel plates by using a straight edge and should reject any plate that is permanently deformed.

Steel plates used in the traveled portion of the highway shall have a surface that was manufactured with a nominal Coefficient Of Friction (COF) of 0.35 as determined by California Test Method 342 (See Appendix H, Encroachment Permits Manual). If a different test method is used, the permittee may utilize standard test plates with known coefficients of friction available from each Caltrans District Materials Engineer to correlate skid resistance results to California Test Method 342. Based on the test data, the permittee shall determine what amount of surface wear is acceptable, and independently ascertain when to remove, test, or resurface an individual plate.

Caltrans Inspectors should not enforce plate removal unless it is permanently deformed or delivered without the required surfacing. However, an inspector should document in a diary all contacts with the contractor.

A “Rough Road” (W8-8) sign and a “Steel Plate Ahead” (W8-24) sign with black lettering on an orange background must be used in advance of steel plate bridging along with the required construction area signs. These signs must be used along with any other construction area signs.

Surfacing requirements are not necessary for steel plates used in parking strips, on shoulders not used for turning movements, or on connecting driveways, etc., not open to the public.

© 2018 California Department of Transportation. All Rights Reserved.

STORMWATER SPECIAL PROVIONS FOR MINIMAL OR NO IMPACT (SWSP)

TR-0400 (Rev 05/2018)

1. **GENERAL:** The purpose of these Special Provisions is to provide the Permittee with specifications for water pollution control to minimize, prevent, or control the discharge of material into the air, surface waters, groundwater, and storm sewers owned by the State or local agencies. These provisions are not intended to take the place of the Caltrans Water Pollution Control Program (WPCP) for projects where soil disturbance from work activities less than one acre, or work activities of one acre or more subject to the preparation of the Caltrans Storm Water Pollution Prevention Plan (SWPPP). The Permittee must comply with the following Special Provisions and the direction of the State Representative. All Stormwater Best Management Practices (BMPs) must conform to Section 13 Water Pollution Control of Caltrans' Standard Specifications.
2. **NPDES REQUIREMENTS:** The Permittee must be responsible for full compliance with the Caltrans Storm Water Program and the Caltrans National Pollutant Discharge Elimination System (NPDES) Permit requirements (*Order No. 2012-0011-DWQ, NPDES No CAS000003*) and for and projects disturbing one acre or more of soil, full compliance with the California Construction General Permit *(Order No. 2009-0009-DWQ, NPDES No CAS000002)* or for projects for projects that have one acre or more of soil disturbance in the Lahontan Region *(Order No. R6T-2016-0010, NPDES No CAG616002).* It is the Permittee's responsibility to install, inspect, and repair or maintain facilities and devices used for water pollution control practices (BMPs) before performing daily work activities. Installation, inspection and maintenance responsibilities on the job site include: 1) soil stabilization materials in work areas that are inactive or prior to storm events, 2) water pollution control devices to control sediment and erosion, 3) implementation of spill and leak prevention procedures for chemical and hazardous substances stored on the job site, 4) material storage, 5) stockpile management, 6) waste management, 7) non-stormwater management, 8) water conservation, 9) tracking controls and 1 0) illicit connection, illegal discharge detection and reporting. The Permittee must report to the State representative when discharges enter into receiving waters, adjacent property, drainage systems or when discharges could be a cause or a threat for water pollution. The Permittee must also control illicit discharges or illegal dumping prior to start of daily work schedule. Copies of written notices or orders from the Regional Water Quality Control Board or other regulatory agency must be provided to the State representative within 48 hours of reported activity. F or additional information on stormwater compliance, visit the State Water Resources Control Boards storm water Website at:

   http://www.waterboards.ca.gov/water_issues/programs/stormwater

3. **RESPONSIBILITY FOR DEBRIS REMOVAL:** The Permittee must be responsible for preventing sediment, trash, debris, and other construction waste from entering the street, the storm drains, local creeks, or any other bodies of water.
4. **SPOILS AND RESIDUE:** The Permittee must vacuum any saw-cut concrete waste material, debris, residue, etc. No spoils, debris, residue, etc. must be washed into a drainage system.
5. **SWEEPING:** Sweep paved roads at construction entrance and exit locations and surrounding paved areas daily within the job site during: 1) clearing and grubbing, 2) earthwork, 3) trenching, 4) soil disturbance, 5) pavement grinding and/or cutting, and 6) after observing tracking of material onto or off the State property. Keep dust to a minimum during sweeping activities. Use vacuum whenever dust generation is excessive or sediment pickup is ineffective.
   Roadways or work areas must not be washed down with water. Street sweeping operations must conform to Section 13 Water Pollution Control of Caltrans' Standard Specifications.
6. **VEHICLES AND EQUIPMENT:** Permittee must prevent all vehicles, equipment, etc. from leakage or mud tracking onto roadways. If leaks cannot be repaired immediately, remove the vehicle or equipment from the job site.
7. **MAINTENANCE AND FUELING OF VEHICLES AND EQUIPMENT:** Maintenance and fueling of equipment must not result in any pollution at the job site. The Permittee must immediately clean up spills/leaks, and properly dispose of contaminated soil and materials.
8. **CLEANING VEHICLES AND EQUIPMENT:** Limit vehicle and equipment cleaning or washing at the job site except what is necessary to control vehicle tracking or hazardous waste. The Permittee must clean all equipment within a bermed area or over a drip pan large enough to prevent run-off. No soaps, solvents, degreasers, etc. must be used in State right-of-way. Any water from this operation must be collected and disposed of at an appropriate site. Containment berms or dikes must be used for fueling, washing, maintaining and washing vehicles or equipment in outside areas. Containment must be performed at least 100 feet from concentrated flows of storm water, drainage courses, and storm drain inlets if within a flood plain, otherwise at least 50 feet if outside the floodplain. Keep adequate quantities of absorbent spill- cleanup material and spill kits in the fueling or maintenance area and on fueling trucks.
9. **DIESEL FUELS:** The use of diesel fuel from petroleum or other fossil fuel as a form-oil or solvent is not allowed.
10. **WEATHER CONDITIONS AT WORKSITE:** Any activity that would generate fine particles or dust that could be transported off site by stormwater must be performed during dry weather.
11. **WIND EROSION PROTECTION**: The use of Wind Erosion BMPs must be deployed year-round in instances where dust or fine particles could be transported off site.
12. **HOT MIX ASPHALT:** Runoff from washing hot mix asphalt must not enter into any drainage conveyances.
13. **PROTECTION OF DRAINAGE FACILITIES:** The Permittee must protect/cover gutters, ditches, drainage courses, and inlets with gravel bags, fiber rolls, State approved fabric filters, etc., to the satisfaction of the State representative during grading, paving, saw-cutting, etc. and materials must conform to Section 13-6.02 Materials for Water Pollution Control of Caltrans' Standard Specifications. No such protection measures must cause an obstruction to the traveling public. The Permittee must implement spill and leak prevention procedures for chemicals and hazardous substances stored on the job site (including secondary containment requirements) in accordance to section 13-4.03B Spill Prevention and Control, and 14-11 Hazardous Waste and Contamination, Water Pollution Control of Caltrans' Standard Specifications.
14. **PAINT:** Rinsing of painting equipment and materials is not permitted in State right-of-way. When thoroughly dry, dispose of

© 2018 California Department of Transportation. All Rights Reserved.

the following as solid waste: dry latex paint, paint cans, used brushes, rags, gloves, absorbent materials, and drop cloths. Oil based paint sludge and unusable thinner must be disposed of at an approved hazardous waste site.

15. **CONSTRUCTION MATERIALS:** Stockpile of all construction materials, including, but not limited to; pressure treated wood, asphalt concrete, cold mix asphalt concrete, concrete, grout, cement containing premixes, and mortar, must conform to section 13-4.03C (2) Material Storage & 13-4.03C (3) Stockpile Management of Caltrans' Standard Specifications.
16. **CONCRETE EQUIPMENT:** Concrete equipment must be washed in a designated washing area in a way that does not contaminate soil, receiving waters, or storm drain systems.
17. **EXISTING VEGETATION:** Established existing vegetation is the best form of erosion control. Minimize disturbance to existing vegetation. Damaged or removed vegetation must be replaced as directed by the State Representative.
18. **SOIL DISTURBANCE:** Soil disturbing activities must be avoided during the wet weather season. I f construction activities during wet weather are allowed in your permit, all necessary erosion control and soil stabilization measures must be implemented in advance of soil disturbing activity.
19. **SLOPE STABILIZATION AND SEDIMENT CONTROL:** Consider a certified expert in Erosion and Sediment control in cases where slopes are disturbed during construction. The Permittee is directed to comply with Section 13.5 Temporary Soil Stabilization and Section 21 Erosion Control of Caltrans' Standard Specifications during application of temporary soil stabilization measures to the soil surface. Fiber rolls or silt fences may be required down slope until permanent soil stabilization is established. Remove the accumulated sediment whenever the sediment accumulates to 1/3 of the linear sediment barrier height. The Permittee must limit the use of plastic materials when more sustainable, environmentally friendly alternatives exist or when environmental regulations prohibit their use within the project.
20. **STOCKPILES:** Stockpiles containing aggregate and/or soil must be stored at least 100 feet from concentrated flows of storm water, drainage courses, and storm drain inlets if within a flood plain, otherwise at least 50 feet if outside the floodplain, and must be covered and protected with a temporary perimeter sediment barrier. Cold mix stockpiles must be stored on an impermeable surface and covered with 9 mil plastic to prevent contact with water. Minimize stockpiling of materials on the job site. Manage stockpiles by implementing the water pollution control practices in Section 13-4.03C (3) Stockpile Management of the State of California standard specifications for construction.
21. **DISCOVERY OF CONTAMINATION:** The State Representative must be notified in case any unusual discoloration, odor, or texture of ground water, is found in excavated material or if abandoned, underground tanks, pipes, or buried debris are encountered.
22. **SANITARY AND SEPTIC WASTE:** Do not bury or discharge wastewater from a sanitary or septic system within the highway. Properly connected sewer facilities are free from leaks. With State Representative approval place portable sanitary facility at least 50 feet away from storm drains, receiving waters, and flow lines. Permittee must comply with local health agency provisions when using an on-site disposal system.
23. **LIQUID WASTE:** Prevent job site liquid waste from entering storm drain systems and receiving waters. Drilling slurries, grease or oil-free waste water or rinse water, dredging, wash water or rinse water running off a surface or other non-storm water liquids not covered under separate waste water permits must be held in structurally sound, leak-proof containers, such as portable bins or portable tanks. Store containers at least 50 feet away from moving vehicles and equipment. Liquid waste may require testing to determine hazardous material content prior to disposal. All measures must conform to section 13-4.03D (5) Liquid Waste, Water Pollution Control of Caltrans' Standard Specifications.
24. **WATER CONTROL AND CONSERVATION:** Manage water use in a w ay that will prevent erosion and the discharge of pollutants into storm drain systems and receiving waters. Direct runoff, including water from water line repair from the job site to areas where it can infiltrate into the ground. Direct water from off-site sources around the job site or from contact with jobsite runoff.
25. **PILE DRIVING:** Keep spill kits and cleanup materials at pile driving locations. Park pile driving equipment over drip pans, absorbent pads, or plastic sheeting with absorbent material, and away from stormwater run-on when not in use.
26. **DEWATERING**: Dewatering consists of discharging accumulated storm water, groundwater, or surface water from excavations or temporary containment facilities. All dewatering operations must comply with the latest Caltrans guidelines including the Field Guide for Construction Site Dewatering. Contact State representative for approval of dewatering discharge by infiltration or evaporation, otherwise, any effluent discharged into a permitted storm water system requires approval from the Regional Water Quality Control Board. Prior to the start of dewatering, the Permittee must provide the State Representative with a dewatering and discharge work plan that complies with section 13-4.03G Dewatering, Water Pollution Control of Caltrans' Standard Specifications. A copy of the Waste Discharge Permit and a copy of a valid WDID number issued by the Regional Board must be provided to the State representative.

© 2018 California Department of Transportation. All Rights Reserved.

STRUCTURE AS-BUILT PLANS SUBMITTAL ROUTE SLIP

FOR LOCALLY-ADVERTISED CONSULTANT-DESIGNED STRUCTURE PROJECT(S)

CONTRACT EA: _____

PERMIT NO. (to local entity): _____

DIST/CO/RTE/PM(KP): _____

COMPLETION & ACCEPTANCE OF PROJECT CONSTRUCTION CONTRACT FIELD WORK (DATE): _____

BRIDGE NO(S): _____

CONSTRUCTION CONTRACT ADMINISTRATOR (Name, Phone, & Firm): _____

CALTRANS OVERSIGHT STRUCTURE REPRESENTATIVE (Name & Phone): _____

CALTRANS DISTRICT OVERSIGHT RESIDENT ENGINEER (Name & Phone): _____

DISTRICT ENCROACHMENT PERMITS ENGINEER (Name & Phone): _____

CALTRANS STRUCTURES OSFP OVERSIGHT LIAISON ENGINEER (Name & Phone): _____

KEEP THIS MEMO WITH THE STRUCTURE AS-BUILT PLAN PACKAGE
(HAND CARRY OR EXPRESS MAIL TO THE NEXT PERSON)

Initials/Date

_____ 1) CONSTRUCTION CONTRACT ADMINISTRATOR / STRUCTURE REPRESENTATIVE

- Compile all structure As-Built changes, including supplemental plan sheets due to CCO's. Consultant Structure Representatives shall review structure As-Built changes with the State Oversight Structure Representative prior to delivery to Division of Structure Construction in Sacramento.
- Send the field office set of red-marked As-Built prints to CALTRANS ESC, Offices of Structure Construction, MS 9-2/11H, 1801 30th Street, Sacramento, CA 95816.

_____ 2) DIVISION OF STRUCTURE CONSTRUCTION (DSC), SACRAMENTO

- Receive and review the structure As-Built Plans changes noted on the field office set of red-marked As-Built prints.
- Verify that **ALL** of the As-Built structure sheets have been received and have the As-Built stamp (including Log of Test Borings plan sheets).
- Update contract records.

_____ 3) DIVISION OF EARTHQUAKE ENGINEERING & DESIGN SUPPORT (DEE&DS), Office of Special Funded Projects

- Receive and review As-Built changes.
- Deliver the package of the field office set of red marked as built prints, and the As-Built route slip to the Design Consultant so that the As-Built changes can be transferred onto the Local Entity's as-advertised tracings.

_____ 4) DESIGN CONSULTANT

- Transfer **red-marked** As-Built changes to original **as-advertised** tracings (or to the Computer Graphics files if necessary). The original as-advertised tracings thereby become the final As-Built tracings.
- Deliver field office set of red-marked As-Built prints, the set of final As-Built tracings and this Slip by express mail or hand carry to CALTRANS ESC – OSFP, MS 9-2/7G, 1801 30th Street, Sacramento, CA 95816*

_____ 5) DIVISION OF EARTHQUAKE ENGINEERING & DESIGN SUPPORT (DEE&DS), Office of Special Funded Projects

- Verify that As-Built red-marked changes and approved CCO's are reflected on the final As-Built tracings.
- **Inform** District Resident Engineer (or District Encroachment Permit Engineer if total estimate < $1M) that the final structure As-Builts have been received and are satisfactory. The RE or the District Permit Engineer can then initiate and submit the Progress Billing/Completion Notice (TR-0129) regarding structure requirements to the District Permit Section**
- **Inform** Design Consultant that final structure As-Builts have been received and are satisfactory.
- Structures OSFP retains the field office set of red-marked As-Built prints until the final As-Built tracings are returned from HQ Micrographics. Final structure As-Built tracings are forwarded to DSM&I.

_____ 6) DIVISION OF STRUCTURES MAINTENANCE AND INVESTIGATIONS (DSM&I)

- Notify DSM&I-Encroachment Permits Section that As-Built plans have been received and are satisfactory.
- Scan final As-Built tracings into bridge information records system, BIRIS.
- Forward final As-Built tracings to HQ Micrographics.

_____ 7) HQ MICROGRAPHICS

- Use final structure As-Built tracings to order 3 full sets of microfilm (roadway & structures) aperture cards.
- HQ Micrographics files a set of microfilms, delivers a set to both the District, and the Department's security file.
- Return the final structure As-Built tracings to Structures OSFP [for storage/disposal or return to Design Consultant of Local Entity (if requested)]. Structures OSFP can then dispose of the field office set of red-marked As-Built prints or return them to the Design Consultant or Local Entity (if requested).

* When required by contract with Local Agency, send a **copy** of red-marked prints and reproducible **copies** of final As-Built plans to the Local Agency**.** Design Consultant keeps a set of reproducible **copies** of the final As-Built plans for own file.

**Project closure is also contingent upon the submittal of other final structure project records and District Roadway As-Built Plan Package to the District.

© 2018 California Department of Transportation. All Rights Reserved.

STRUCTURE WORK

Use these special provisions when Permit includes any capital improvement work (Capital Outlay Program or Permit Program) involving structure related facilities such as: modification to existing bridges, new bridges, all tunnels, underground structures, single and multi-cell culverts wider than 20' measured in the direction of traffic, storage boxes, non-standard retaining walls, non-standard sound walls (including sound walls on retaining wall), earth retaining systems, bridge-mounted sign structures, overhead sign structures, pump plants, slope paving under bridges (including any paving or channel lining around bridge columns), seal slabs/boat sections, transit stations, and toll plazas.

In addition to the attached General Provisions (TR-0045), the following special provisions are also applicable:

1. BEGINNING OF WORK:

The PERMITTEE shall notify the Department's Representative, _____
(Name of Structures Area Construction Manager)
at _____ two (2) weeks before the intent to start permitted work to ensure coordination
(Phone Number)
with the Division of Structure Construction.

2. CONTRACT DOCUMENTS:

In addition to the number of as-advertised contract document sets required by the District Permit Engineer for district use, the PERMITTEE shall include a minimum of eleven (11) additional sets of contract documents (plans, special provisions and addenda) for use by the Caltrans Division of Engineering Services. Upon approval of the permit application, the District Permit Office shall distribute the eleven additional sets of contract documents to:

State of California
Department of Transportation
Division of Engineering Services
Office of Special Funded Projects, MS 9-2/7G
1801 30th Street
Sacramento, CA 95816

Depending on the work contemplated in the project, more copies may be required as determined by the District Permit Engineer and the Structures OSFP Liaison Engineer.

3. AS-BUILT & OTHER COMPLETION RECORDS

Within sixty (60) days following completion and acceptance of the project construction contract, PERMITTEE shall furnish acceptable completion records, which are applicable to the project, to the STATE representatives shown in the following table. Completion records shall be submitted in accordance with the "Submittal Instructions and Forms" shown in the following table. When requested by the PERMITTEE, the STATE representative shall furnish the instructions and forms shown in the following table. This information is also available from the Caltrans internet website.

Completion records or accompanying correspondence shall not include disclaimer statements of any kind. Such statements shall constitute non-compliance with these provisions.

For Locally Advertised projects, the As-Built Plan Package shall include the "Structures As-Built Plan Submittal Route Slip."

© 2018 California Department of Transportation. All Rights Reserved.

Completion Records Table

Completion Record	Submittal Instructions and Forms	Submit Completion Record to:
Field Office set of red-marked As-Built plans for Structures, including Log of Test Borings from the Construction Contract Administrator	Furnish the construction field office set of red-marked As-Built prints, AND Initial, date, and attach the "Structures As-Built Plan Submittal Route Slip" to the As-Built plans submittal package.	Express Mail or hand carry to: State of California Department of Transportation Division of Engineering Services Division of Structure Construction 1801 30th Street, MS 9-2/11H Sacramento, CA 95816
Final As-Built plans for Structures, including Log of Test Borings from the Design Consultant	Furnish one (1) complete set of acceptable full size reproducible As-Built plans, AND Furnish the construction field office set of red-marked As-Built prints, AND Initial, date, and attach the Structures As-Built Plan Submittal Route Slip to the As-Built plans submittal package.	Regular Mailing Address: State of California Department of Transportation Division of Engineering Services Office of Special Funded Projects MS 9-2/7G P.O. Box 168041 Sacramento, CA 95816-8041 Next Day Mail or hand carry to: State of California, Department of Transportation Division of Engineering Services Office of Special Funded Projects 1801 30th Street, MS 9-2/7G Sacramento, CA 95816
Working Drawings (Shop Plans)	See contract special provisions and Standard Specifications for each individual structure.	DES Structures Document Unit Division of Structure Design
Report of Completion for Structures	Submit, for each individual structure, Form DS-OS C3, "Report of Completion-Bridges", or equivalent.	Division of Structure Construction Oversight field Engineer for the project construction contract
Joint Movement Calculations for Structures	Submit, for each individual structure, Form DSD-D-0129, "Joint Movement Calculations" or equivalent.	Division of Structure Construction Oversight field Engineer for the project construction contract
Driven Pile Records	Submit, for each individual structure, Forms DC-C78, "Pile Quantity & Driving Record (Driven Piles)"; DH-OS C79, "Log Pile Sheet"; and DH-OS C80, "Pile Layout Sheet"; or equivalent.	Division of Structure Construction Oversight field Engineer for the project construction contract
Paint Records for Structures	Submit, for each individual structure, Forms DH-OS M5, "Clean and Paint Cost Summary"; DH-OS M8, "Daily Clean & Paint Record"; DH-OS M11, "Paint Record", and DH-OS M78, "Spot – Sandblasting Report"; or equivalent.	Division of Structure Construction Oversight field Engineer for the project construction contract

© 2018 California Department of Transportation. All Rights Reserved.

SURVEYS (SV)

In addition to the attached General Provisions (TR-0045), the following special provisions are also applicable:

1. Two days before work is started under this permit, contact _____concerning the permittee's operation.
2. All survey operations shall be conducted off the traveled way except where necessary to cross pavements and medians.
3. When survey operations are being conducted, the permittee shall furnish, place and maintain signs and safety equipment in accordance with the latest edition of the "California Manual on Uniform Traffic Control Devices" (Part 6, Temporary Traffic Control).
4. All personnel shall wear hard hats and orange vests, shirts or jackets as appropriate. Any painted markings shall be made with water soluble paint.
5. Permission is also granted to park survey vehicles temporarily within the right of way, outside the shoulders, while survey work is in progress.
6. SURVEY WORK IS PROHIBITED ON FREEWAYS.
7. Survey information and assistance may be obtained upon request to: Survey Section, Department of Transportation, _____.

© 2018 California Department of Transportation. All Rights Reserved.

TEMPORARY GROUND ANCHORS (TIEBACKS)

1. The tiebacks must be de-tensioned and physically detached from the shoring wall once the permittee's foundation construction is complete. No future access to the tiebacks will be allowed once they have been detached.

2. Tieback installations shall not be placed in such a manner to impact traffic operations, maintenance, or obstruct any future transportation improvements in the state right-of-way.

3. Permanent tiebacks are prohibited. Tiebacks shall not be used to support the completed structure.

4. The shoring wall shall not be located within the state highway right-of-way.

5. The shoring wall shall be monitored during construction to determine any lateral movement.

6. The temporary wall must not create perched ground water that affects the foundation strength of state structures and facilities.

7. Should any underground facilities or utilities be encountered during the installation of the tiebacks, work must stop and the Caltrans representative shall be immediately notified. Work will not continue until Caltrans agrees to an alternate strategy (including the possible need to redesign) or other mitigation.

8. Deformation impacting state structures, roadways, utilities, drainage, or other features as a result of installation of the temporary excavation support and grouting, is not permitted. Should unanticipated deformation or other impacts occur, the Caltrans representative shall be immediately notified, and work will cease until Caltrans agrees to an alternate strategy (including the possible need to redesign) or other mitigation.

9. Upon completion of the installation and subsequent de-tensioning of the tiebacks, the permittee must submit as-built plans, prepared in accordance with Caltrans' CADD Users Manual, of all objects installed and to be abandoned in state highway right-of-way and submit as-built plans to Structure Construction for their authorization.

© 2018 California Department of Transportation. All Rights Reserved.

TRAFFIC COUNTERS (SV)

In addition to the attached General Provisions (TR-0045), the following special provisions are also applicable:

1. Personnel installing or removing traffic counters shall wear an orange colored outer garment and a hard hat.
2. Traffic counters installed on freeway ramps shall be located at the curb return as near as possible to the local street intersection.
3. Counter tubes shall be securely attached to the pavement by taping. No nails, spikes or other material shall be driven into the pavement except to secure the tube at the outside edge of shoulder, at the lip of a gutter, or in the center line stripe.
4. A copy of the collected data shall be sent to the Caltrans District Permit Engineer.

© 2018 California Department of Transportation. All Rights Reserved.

TRAFFIC SIGNAL CONTROLLER ASSEMBLY (Rev. 07/99)

In addition to the attached General Provisions (TR-0045), the following special provisions are also applicable:

Use the special provision that pertains to either a chargeable or Department Furnished controller assembly. When the permittee is charged a fee for the controller, the special provision will identify the fee amount and instructions for requesting controller assembly delivery. When Caltrans is providing the controller under a Cooperative Agreement, the provision contains only the delivery instructions.

Use this Statement in Permits for Privately Funded Projects and Locally Funded Projects Without Cooperative Agreements

The permittee or the contractor for a local agency shall pay $5,600 to Caltrans to compensate the State of California for the costs incurred in obtaining, testing, and supplying a Traffic Signal Controller Assembly. This fee does not supercede any other fee charged by Caltrans for review, inspection or field work performed by Department staff as a result of the permitted work. If the fee has not been paid before permit issuance, full payment shall be made to the district cashier before starting any traffic signal work authorized by this permit, and at least 30 (thirty) days before the controller is needed for installation. The permittee shall give the State representative not less than 10 (ten) working days written advance notice before picking up the cabinet assembly (without the controller). When notified by the permittee, Caltrans will provide the permittee with a time and location for picking up that cabinet assembly. Caltrans will subsequently deliver the actual controller to the job site at the prearranged time of signal turn on.

Use this Statement in Permits When a Traffic Controller Assembly is Provided for Projects Involving Cooperative Agreements

The permittee shall give the State representative at least 10 (ten) working days written advance notice before picking up the cabinet assembly (without the controller). When notified by the permittee, Caltrans will provide the permittee with a time and location for picking up the cabinet assembly. Caltrans will deliver the controller to the job site at the prearranged time of signal activation.

© 2018 California Department of Transportation. All Rights Reserved.

TRAFFIC STRIPING, MARKINGS, AND SIGNS

In addition to the attached General Provisions (TR-0045), the following special provisions are also applicable:

1. Traffic striping, pavement markings and signs shall be furnished and placed by the permittee and the cost shall be borne by the permittee. Where new asphalt concrete has been placed, painted striping and pavement markings shall be installed within 24-hours. Where shown on the plans, after thirty (30) days curing time, thermoplastic materials shall be applied in compliance with Section 84 of the Standard Specifications.
2. Roadside signs shall be placed at locations shown on the permit plans and shall be installed in compliance with the latest edition of Caltrans Standard Plans.
3. Permittee shall furnish to State's representative a completed Form CEM-3101 "Notice of Materials to be Used," and approval of the material used shall be obtained prior to its installation.

© 2018 California Department of Transportation. All Rights Reserved.

TREE PRUNING (TRIMMING) AND CHEMICAL APPLICATION

TR – 0159 (Rev. 07/2018)

In addition to the attached General Provisions (TR-0045), the following special provisions are also applicable:

I. GENERAL (Applies to BOTH Non-Utility and Utility Projects):

1. Scheduled pruning work may be restricted by Caltrans to maintain mobility during special events, commuter traffic, or other periods of projected high traffic volumes.
   i. Traffic control is generally authorized from 9 a.m. to 3 p.m., Monday through Friday, excluding holidays. Extended traffic control hours may be required by Caltrans.
   ii. Traffic control must conform to requirements shown in the State Standard Plans. When required, the use of a flashing arrow board is MANDATORY.
   iii. Suspend work during inclement weather, such as heavy fog, if lane or shoulder closures will be required. Do not perform pruning work during periods of high wind to minimize the spread of debris into the traveled way.
2. Prune trees in compliance with the most recent version of ANSI A300-Pruning Part 1, the American National Standard for Tree Care Operations, Tree, Shrub and Other Woody Plant Maintenance-Standard Practices (Pruning), and the International Society of Arboriculture (ISA) Tree Pruning Best Management Practices.
3. Prune trees in compliance with the seasonal tree pruning restrictions specified in the Migratory Bird Act and meet the seasonal requirements of specific tree species. Perform pruning based upon the age of the tree (newly planted or established), type of tree (evergreen or deciduous), purpose for pruning (maintenance of form, structure, maintaining sight lines, utility clearance), and to minimize the spread of disease (pine pitch canker, eucalyptus psyllid, eucalyptus borer beetles, Dutch elm disease, or mistletoe).
4. Tree trimmers must be licensed by the California State Contractors State License Board and hold a current C61/D49 license.
5. Do not use climbing spurs to prune trees, except when working in the tops of Eucalyptus, Palms, and Conifers.
6. Prune trees to maintain their natural structure and shape. If unbalanced growth already exists, first thin and head prune the tree. Where prior topping or side pruning has resulted in excessive growth over the State right-of-way, prune to restore a balanced, symmetrical shape. Avoid creating large holes in the canopy. Upon completion of work, trees should present a balanced, symmetrical shape that is characteristic of their species.
7. Prune trees to maintain their natural open crown structure. Do not cut young growth year after year at the same fixed distance from the trunk. This technique creates very dense growth at the tree canopy margin, growth called “crow’s nests” or “brooms”. Maintain the natural open crown structure by thinning out dense growth.
8. Prune trees to restore an open crown structure. Remove limbs larger than 2-inches in diameter as necessary to open up dense growth, called “crows' nests” or “brooms.” Make these cuts at laterals or parent branches in older wood so that the following season’s growth will result in a crown structure free of dense, disfiguring growth.

© 2018 California Department of Transportation. All Rights Reserved.

9. Prune trees to avoid redirecting growth over the highway. Maintain the terminal bud of the leader. Perform top or center pruning only after these trees have recovered their natural balance and form.
10. Final cuts must not leave stubs. Prune in ways that maximize wound recovery from callus growth. Keep wounds as small as practicable, reasonably flush, within the shoulder ring area, keeping cambial tissues at the cut edge alive and healthy. Do not make extreme flush cuts that produce large wounds and weaken the tree.
11. Remove debris, cuttings, and tree limbs from the State right-of-way at the end of each workday, leaving the work area in a safe and presentable condition. In regions where pruned limbs and bark might harbor pests or disease (such as pine pitch canker, eucalyptus psyllid, eucalyptus borer beetles, Dutch elm disease, or sudden oak death) dispose pruned materials in accordance with Federal, State, and local agency requirements.
12. Topping of trees is not allowed.
13. Prune trees to allow 8' over sidewalks and 17' over vehicular pavement.
14. Pruning must not change the character of the tree.

II. ADDITIONAL TREE PRUNING REQUIREMENTS FOR UTILITIES ONLY:

Comply with the requirements under "I. General" above, and the following:

1. Severity of utility tree pruning work may be restricted by the District Landscape Specialist to preserve the appearance of trees that possess high value due to local community significance, historic landscape potential, or documented horticultural value.
2. Limit pruning severity such that required minimum clearances are maintained for no more than two years.
3. Comply with minimum utility clearances as established by the CPUC General Orders, California Public Resources Code and Federal and State laws. Clearances that exceed the established minimum must be agreed upon by Caltrans and the Utility Company. For most locations, pruning should not take place more frequently than once per year. Pruning clearances and pruning frequencies must reflect the species, growth habit, condition, and health of each tree.
4. Prune trees receiving their first pruning, or recently pruned trees with "directional pruning" as defined in the ISA Tree-Pruning Guidelines. Trees that cannot be directionally pruned, such as older trees that have been topped many times may be submitted for consideration of removal.
5. Do not perform initial, severe "V" shaped pruning on trees along any highway, expressway or freeway without approval from the District Landscape Specialist or District Landscape Architect. Do not perform severe "V" pruning on any tree along a state or federally designated scenic highway without approval from the District Landscape Architect.
6. Maintain previously "rounded over" trees consistent with past practices, unless Caltrans and the Electric Utility owner agree that the tree can be directionally pruned or have its crown restored without creating structural defects or growth that presents a liability.

III. <u>CHEMICAL CONTROL:</u>

1. Do not apply chemicals to trees located on scenic highways.
2. Upon approval by Caltrans to use chemicals, also obtain approval by the County Agricultural Commissioner.
3. Control resprouting tree species using integrated vegetation management program techniques, including chemical and non-chemical methods.

© 2018 California Department of Transportation. All Rights Reserved.

4. Prior to chemical application, obtain a pest control recommendation from a licensed Pest Control Advisor. Submit a copy of the recommendation to the Caltrans District Landscape Specialist or their designee.
5. Utility Companies must maintain a list of locations, chemical types, and quantities used for treatment in pruning operations. Provide this information upon expiration of your annual permit or upon request of the Department during the annual/biennial permit period.
6. Utility Companies must submit copies of MSDS sheets for all chemical compounds used in tree pruning operations along with their permit application.
7. Utility Companies must notify the District Encroachment Permits Office when they change or modify the chemicals used in their pruning operations.

© 2018 California Department of Transportation. All Rights Reserved.

TREE REMOVAL

TR – 0171 (New 01/2018)

In addition to the attached General Provisions (TR-0045), the following special provisions are also applicable:

I. GENERAL (Applies to BOTH Non-Utility and Utility Projects):

1. Scheduled removal work may be restricted by Caltrans to maintain mobility during special events, commuter traffic, or other periods of projected high traffic volumes.
   i. Traffic control is generally authorized from 9 a.m. to 3 p.m., Monday through Friday, excluding holidays. Extended traffic control hours may be required by Caltrans.
   ii. Traffic control must conform to requirements shown in the State Standard Plans. When required, the use of a flashing arrow board is MANDATORY.
   iii. Suspend removal work during inclement weather, such as heavy fog, if lane or shoulder closures will be required. Do not perform removal work during periods of high wind to minimize the spread of debris into the traveled way.
2. Remove trees in compliance with the seasonal restrictions specified in the Migratory Bird Act.
3. Contractors must be licensed by the California State Contractors State License Board and hold a current C61/D49 license.
4. Remove debris, cuttings, and limbs from the State right-of-way at the end of each workday, leaving the work area in a safe and presentable condition. In regions where debris, cuttings, limbs and bark may harbor pests or disease (such as pine pitch canker, eucalyptus psyllid, eucalyptus borer beetles, Dutch elm disease, or sudden oak death) dispose the vegetative materials in accordance with Federal, State, and local agency requirements.
5. Permittee or their contractors may collect woodchips produced by removing trees located both inside and outside Caltrans right-of-way, and dispose of these woodchips by placing them in locations within Caltrans right-of-way, when approved in advance by Caltrans Maintenance. Woodchips must not create a fire hazard, encourage illegal dumping, block traveler sightlines, or obstruct drainage ditches or drain inlets.

II. NON-UTILITY TREE REMOVAL PROJECTS:

When a permit is issued for removal of a tree as an independent operation or as a part of other work, the entire stump must be taken out to a depth of at least 12-inches below the ground surface. All debris must be removed from the right of way. The hole left by the stump must be backfilled and thoroughly tamped and the site left in a safe presentable condition.

III. UTILITY TREE REMOVAL PROJECTS ONLY:

Removal of trees over sub-surface Gas lines:

After trees are removed, cut trunks flush with the ground, leaving no more than 2-inches exposed above the finished grade. If required by Caltrans, remove the stump to a depth of at least 12-inches, remove all debris from the hole, backfill with clean fill, and thoroughly compact the soil, leaving the area in a safe presentable condition.

© 2018 California Department of Transportation. All Rights Reserved.

UNCASED HIGH-PRESSURE NATURAL GAS PIPELINE PROVISIONS

TR-0158 (Rev 04/2018)

In addition to the attached General Provisions (TR-0045), the following special provisions are also applicable:

In accordance with the Department's Project Development Procedures Manual, all new high priority utilities and pressurized facilities are required to be encased on both conventional and access controlled highway rights-of-way.

Based on the Memorandum dated November 9, 1994, "Exception to Policy - Uncased High-pressure Natural Gas Pipelines," the Department may allow the installation of uncased natural gas pipelines crossings in specific circumstances. The Department's primary concerns are for public safety, the integrity of the highway facility and the mechanical protection of the pipeline itself, it is necessary to limit the number of requests for transverse natural gas transmission pipeline crossings without casings to locations where all of the following conditions are met:

UNG 1. The pipeline owner agrees that the crossing will be designed for construction in accordance with the Code of Federal Regulations, Title 49, Part 192, and/or the California Public Utilities Commission General Orders No. 112-D with respect to natural gas pipelines. The crossing design shall be comprehensive in all respects including but not limited to" material specification, pipe wall thickness determination, coating selection, and cathodic protection. Soil conditions at each site shall be analyzed for characteristics that may prove harmful to the protective pipe coating. This analysis shall be used by the pipeline owner in selecting a protective pipe coating sufficient to withstand the potential for gouging or peeling during the boring and jacking operation, or other methods approved by Caltrans. The final condition of the coating will be determined by the pipeline owner through monitoring of the boring and jacking operation, visually inspecting the exiting initial pipe segment, and electrical testing by an engineer or technician with expertise in cathodic protection. The test data shall be noted on the as-built drawings. Remedial action will be taken if the condition of the coating is such that cathodic protection is not practical.

UNG 2. The minimum depth of cover within State highway right of way, from the final ground line (finished grade or original ground) to the top of the proposed gas carrier pipeline, is 7.5 feet. If the location is such that it is not practical to achieve the above depth of cover, then an engineered protective cover (such as a reinforced concrete structure) may be provided outside of pavement areas in lieu of casing. At no time shall the minimum depth of cover be less than 42 inches.

UNG 3. The permit specifies that the uncased gas carrier pipeline shall, as a minimum, be designed for a Class 3 Location (Code of Federal Regulations referenced above) for hard surfaced roads, highways, public streets, and railroads. (See attached Excerpts from the Code of Federal Regulations, Design Factor to be used for Natural Gas Pipelines.).

UNG 4. The existence of the crossing is adequately identified by signing at the right-of-way line, with at least one identifying sign, which is visible from the roadway in each direction of travel.

UNG 5. The pipeline owner agrees to provide as-built drawings at completion of the pipeline crossing, with a letter certifying that the pipeline was installed properly and in accordance with the permit plans (including approved changes to the permit plans), and meets industry and regulatory standards for such installation.

UNG 6. All other applicable requirements in Chapter 600 of the Encroachment Permits Manual are satisfied.

UNG 7. All submittals requesting installations of such uncased natural gas pipeline crossings greater than 6 inches in diameter or with normal operating pressures greater than 60 psig and meeting all of the above requirements may be approved by the district. Any deviations from the above requirements require an encroachment policy exception.

© 2018 California Department of Transportation. All Rights Reserved.

EXCERPTS FROM CODE OF FEDERAL REGULATIONS

DESIGN FACTORS TO BE UTILIZED FOR NATURAL GAS PIPELINES

In addition to the attached General Provisions (TR-0045), the following special provisions are also applicable:

In the design of steel natural gas pipelines the Minimum Yield Strength for the grade of steel used is reduced by a Design Factor (F). This Design Factor is determined by the type of road being crossed by the pipeline and a Class Location established by Code of Federal Regulations, Title 49, Part 192 (Office of the Federal Register, 1990).

The Class Location depends on the occupancy of buildings or activities within an area that extends 660 feet from either side of the pipeline centerline for a continuous 1 mile segment of the pipeline. There are four Class Locations as follows:

Class 1. A location that has 10 or less buildings intended for human occupancy.

Class 2. A location that has more than 10 but less than 46 buildings intended for human occupancy.

Class 3. a) Any location that has 46 or more buildings intended for human occupancy; or

b) Area where pipeline lies less than 300 feet of either a building or a small well defined outside area (such as a playground, recreation area, outdoor theater, or other place of public assembly) that is occupied by 20 or more persons on at least 5 days a week for 10 weeks in any 12-month period. (The days or weeks need not to be consecutive).

Class 4. A location where buildings of four or more stories are prevalent.

The design factor used for a specific Class Location also depends on the kind of road involved as indicated on the following Table.

DESIGN FACTOR (F)

	CLASS LOCATION			
TYPE OF THOROUGHFARE	**1**	**2**	**3**	**4**
Privately owned roads	0.72	0.60	0.50	0.40
Unimproved public roads	0.60	0.60	0.50	0.40
Hard surfaced roads, highways public streets, and railroads	0.60	0.50	0.50	0.40

Example: A pipe made of X42 grade of steel which has a Minimum Yield Strength (MYS) of 42,000 psi used in a Class 4 location at a hard surface road crossing would be designed using a reduced Minimum Yield Strength, by applying a Design Factor of 0.4, of 16,800 psi.

© 2018 California Department of Transportation. All Rights Reserved.

UNMANNED AIRCRAFT SYSTEMS (UAS) OPERATION

TR-0416 (New 10/2019)

In addition to the attached General Provisions (TR-0045), the following special provisions are also applicable:

The following are Federal Aviation Administration (FAA) Regulations for small UAS:

1. UAS operations are considered public or commercial operations. UAS operations will occur under Title 14, Code of Federal Regulations, section 107 (also known as Federal Aviation Regulation [FAR] Part 107).
2. Prior to each flight operation, the remote pilot must check the UAS to determine whether it is in a condition for safe operation (section 107.15).
3. A small UAS cannot be operated in a careless or reckless manner that endangers the life or property of another. Do not allow an object to be dropped from UAS in a manner that creates an undue hazard to persons or property (section 107.23).
4. Unless granted a waiver from the FAA from a FAR Part 107, section 107.205 restriction, a remote pilot operating UAS shall NOT:
   a. Operate UAS from a moving aircraft or from a moving land or water-borne vehicle (section 107.25)
   b. Operate UAS at night or during civil twilight hours (section 107.29)
   c. Operate UAS beyond the pilot's ability to clearly determine its orientation with unaided vision (section 107.31)
   d. Act as a remote pilot or visual observer in the operation of more than one UAS at the same time (section 107.35)
   e. Operate UAS over a human being unless that human being is directly participating in the operation of the UAS or is located under a covered structure or inside a stationary vehicle that can provide reasonable protection from a falling small unmanned aircraft (section 107.39)
   f. Operate UAS without yielding the right-of-way to all aircraft, airborne vehicles, and launch and re-entry vehicles. Yielding the right-of-way means that the UAS must give way to aircraft or airborne vehicles and may not pass over, under, or ahead of them unless well clear of the aircraft or vehicle. [section 107.37(a)].
   g. Operate UAS
      i. with a groundspeed exceeding 87 knots (100 miles per hour)
      ii. with an altitude higher than 400 feet above ground level, unless flown within 400-foot radius of a structure and is not higher than 400 feet above the structure's immediate uppermost limit
      iii. with less than 3 statute miles flight visibility
      iv. within 500 feet below clouds nor within 2,000 feet horizontally from clouds (section 107.51)
5. No person shall operate UAS so close to another aircraft as to create a collision hazard [section 107.37(b)].

© 2018 California Department of Transportation. All Rights Reserved.

6. No person shall operate UAS in Class B, Class C, or Class D Airspace as defined by the FAA, or within the lateral boundaries of the surface area of Class E Airspace designated for an airport, unless that person has prior authorization from Air Traffic Control or has a Certificate of Authorization Waiver to do so (section 107.41).
7. No person shall operate UAS in a manner that interferes with operations and traffic patterns at any airport, heliport, or seaplane base (section 107.43).
8. No person shall operate UAS where Temporary Flight Restrictions (TFR) are in place as designated by a Notice-To-Airmen (NOTAM), unless cleared to do so by the controlling agency under 14 CFR 91.137 (section 107.47).
9. A small UAS cannot carry hazardous materials (section 107.36).
10. The maximum total weight of a small unmanned aircraft (UA) (including payload/cameras) operating under FAR Part 107 authority shall be less than 55 pounds. The 55-pound weight limit for small UAS includes everything that is on board or otherwise attached to the aircraft at the time of takeoff (section 107.3).

<u>The following are Caltrans Special Provisions related to small UAS:</u>

1. UAS operations within the SHS shall comply with federal and State laws, local ordinances, and the Caltrans UAS Operations Handbook (Handbook).
2. The remote pilot shall consult current aeronautical charts, Notice to Airmen (NOTAMs), Temporary Flight Restrictions (TFRs), and the “B4UFly” mobile device application prior to each UAS operation.
3. The remote pilot cannot relinquish control of UAS to a non-remote pilot during UAS operation.
4. UAS shall be operated according to manufacturer recommendations, user guide, and maintenance requirements. Prior to each flight operation, the remote pilot must check the UAS to determine whether it is in a condition for safe operation. Equipment will be visually inspected to include the following:
   a. Condition of aircraft including motors, propellers, and electrical connections
   b. Display of the UAS Certificate of Registration number on the UAS
   c. Aircraft radio control transmitter
   d. Camera and gimbal and any other sensor/payload
   e. Battery condition
   f. Video transmitter, receiver, and antennae
5. A permanent marker, label, or engraving of the FAA UAS registration number that is accessible and legible upon close visual inspection, must be affixed to the UAS aircraft.
6. UAS flight crew is the team responsible to perform a UAS operation. The UAS flight crew must include, at a minimum, a remote pilot and a visual observer. Support personnel may be assigned, as needed, to ensure the safe and effective operation of the UAS. UAS flight crew should maintain a position as far from the edge of traveled was as possible (close to the right-of-way line).
7. Do not launch or land UAS closer than 50 feet horizontally from the edge of traveled way unless Intermittent Traffic Control (ITC), or rolling break closure is in effect.

© 2018 California Department of Transportation. All Rights Reserved.

8. Do not operate UAS when manned aircraft (fixed-wing or rotor-wing) or other UAS are observed nearby.
9. Do not operate UAS at an altitude less than 100 feet.
10. UAS cannot operate over event participants, spectators, or bystanders. UAS cannot operate over traveled lanes, bicycle lanes, shoulders, or sidewalks within the SHS unless a closure is in effect.
11. UAS operation shall not be planned to fly over private property without first obtaining permission from the property owner. The remote pilot shall be aware of the right-of-way limits. Remote pilots shall take precautions to avoid accidental or incidental overflight of private property, unless first obtaining permission from the property owner.
12. Traffic impacts must be mitigated. Traffic mitigation measures must be shown on traffic control plans (signed and stamped).
13. A safety meeting shall be conducted prior to UAS operation and will include at least the following items: roles and responsibilities, the planned operation, traffic control, potential safety concerns, and emergency response. Any modifications on the UAS Data form must be notified to the Department's Representative at least 24 hours prior to UAS operation.
14. A remote pilot operating UAS shall not operate UAS:
    a. Above any cloud or smoke that presents obstructions to visibility between the UAS and the remote pilot
    b. In any situation where local conditions have changed considerably prior to or during flight
    c. In a manner to invade individuals' privacy
    d. In restricted types of airspace (see the Handbook)
15. Authorization to operate UAS under an encroachment permit, may be suspended immediately for reasons including, but not limited to the following:
    a. Lack of compliance with the FAA requirements, the Handbook, and/or Caltrans policies and procedures
    b. Lack of required knowledge and/or skills, or lapsed and/or incomplete records, certifications, or certification renewal
    c. The traffic demand for the State facility significantly exceeds the anticipated demand

© 2018 California Department of Transportation. All Rights Reserved.

UTILITY ANNUAL PROVISIONS

TR – 0160 (Rev. 10/2019)

In addition to the attached General Provisions (TR-0045), the following special provisions are also applicable:

Annual utility permits UE are issued to utilities who maintain their facilities within State highway right-ofway. Any utility or public corporation, who lawfully maintains a utility encroachment, or their agent, may perform routine or emergency maintenance on such facility in accordance with the following provisions:

UE1. EXCLUSIONS: These provisions do not authorize any work on freeways and expressways, tree trimming, aerial capacity increases on designated "Scenic Highways", pole replacement / relocation work, or other activities not specifically provided for in this permit.

UE2. EMERGENCY REPAIRS: The permittee may make emergency repairs, alter traffic flow, and excavate through improved surfaces only when breaks in the conduit, cable, or pipeline over or under the pavement presents a definite public hazard or serious interruption of essential services. In such cases, the Department's representative shall be notified immediately.

Replace poles knocked down by vehicles, accidental causes or natural disasters. The entire length of poles and stubs must be removed from the ground and replacement pole must be placed at the exact location. Planned pole replacements/installations are not allowed under this permit.

UE3. OPEN EXCAVATIONS: Excavation must not be left open after daylight hours unless specifically authorized and adequate protection for traffic is provided in accordance with the General Provisions, "Public Traffic Control" And “Minimum Interference with Traffic”. Backfill and pavement replacement must be performed in accordance with General Provisions, "Restoration and Repairs in State Highway right-of-way."

UE4. TRAFFIC CONTROL: Work requiring traffic control shall be conducted between Monday-Friday 9:00 a.m. and 3:00 p.m. or as otherwise authorized by the Permit Engineer. Adequate traffic control must be provided in accordance with the General Provisions, “Public Traffic Control”, “Minimum Interference with Traffic” and “Suspension of Traffic Control Operation.”

Only those maintenance activities that can be performed using a Caltrans Standard Plans for Temporary Traffic Control Systems and Temporary Pedestrian Access Routes are authorized under the annual maintenance permit. Otherwise a separate permit application for the work, along with a traffic control plan designed and signed by a California Registered Civil or Traffic Engineer must be submitted for review and approval.

Advanced notification must be provided to Caltrans Traffic Management Center for any activities that may cause a traffic impact including all lane closures. Adequate notice must be provided in accordance with the General Provisions, “Notification of Closure to Department and Traffic Management Center (TMC).”

UE5. WORK PERMITTED - AERIAL: All permitted activity must not be over the traveled way or within the limits of officially designated scenic highways and/or on Caltrans structures.

1. Maintain, inspect, remove, repair or replace (in the same location) all aerial facilities. Work over the traveled way requires a separate permit and the placement of “H” poles and netting as per form TR-0108, located in Appendix “E” of the Encroachment Permits Manual.

   Replace broken pins and/or insulators, repair broken wires, pull slack wires, and replace or pull broken or slack guys.

   Replace aerial wires and cross arms on existing poles except where wires cross the highway. Unless otherwise specifically required by the Department, protected cable, tree wire or plastic tree wire guard used for communication lines may be used through trees where necessary, provided the appearance of the tree or the tree itself will not be damaged.

© 2018 California Department of Transportation. All Rights Reserved.

Perform insulator washing and interconnect splicing of cables.

Install additional capacity (in the same location), install, maintain, remove, repair or replace aerial service connections with potential to ground of 300 volts or less.

2. Installations and clearances must be equal to those required by either the California Public Utilities Commission orders or the Division of Occupational Safety and Health (Cal/OSHA) regulations promulgated in the California Code of Regulations, Title 8, Chapter 4, whichever is more restrictive.

UE6. WORK PERMITTED - UNDERGROUND:

1. Maintain, inspect, remove, repair or replace (in the same location) all underground facilities except those requiring trenching in the traveled way or require uncovering more than 50 feet of line at any one time. The permittee may open existing manholes to repair underground cables. Where the manhole lies within the improved surface of the highway, the permittee will provide adequate protection for traffic in accordance with the General Provisions "Public Traffic Control" and “Minimum Interference with Traffic”.
2. Install additional capacity in existing ducts except for facilities not in compliance with the Department's High priority utility policies or on Structures.
3. Install air flow monitoring transducers and piping in existing ducts.
4. Barholing, potholing, cleaning, rodding and placing float ropes.
5. Adjust access cover to grade and replace in kind or with larger size pull boxes.
6. Interconnect splicing of cables.
7. Install service connections (laterals) perpendicular to the highway for the following:
   i. Natural gas service lines less than 2 inches in pipe diameter that have normal operating pressures of 60 psig or less
   ii. Subsurface electrical service connections with a potential to ground of 50 volts or less
   iii. Service connections for water, sewer, telephone, telecommunication, and cable service
8. Permanent pavement patching for work authorized by this permit. The patching must be made within thirty (30) days of completion of backfill unless otherwise specified by the Permit Engineer. See Underground Utility Provision UG 9 (form TR-0163).

UE7. POLE MAINTENANCE & CHEMICAL TREATMENT:

1. Utility Companies are to provide a list of the pole identification, locations, type of chemicals and quantities used for their pole treatment maintenance operations. This information must be provided upon expiration of their annual permit or upon request of the Department as needed.
2. Utility Companies must submit copies of the Safety Data Sheets (SDS) for all chemical compounds to be used in their pole treatment maintenance operations, in conjunction with the permit application submittal.
3. Utility Companies are to notify the District Landscape Specialist or their designee and the District Encroachment Permits Office when there is any change or modification in the type(s) of chemical used in their pole treatment maintenance operations.
4. Prior to any application of Tree Growth Regulators (TGR) approval shall be obtained from the District Landscape Specialist or their designee.

UE8. MISCELLANEOUS:

1. Install new and replace existing transformers on existing poles.
2. Clear grass from around base of poles and excavate around poles for inspection, including tamping and straightening. The use of herbicides or other chemicals is not authorized by this permit. A separate encroachment permit is required for that purpose.

© 2018 California Department of Transportation. All Rights Reserved.

UTILITY LEASING

In addition to the attached General Provisions (TR-0045), the following special provisions are also applicable:

1. Leasing all or part of the longitudinal utility encroachment is prohibited. Encroachment includes but is not limited to: utilities, carrier pipes, casings, conduits, poles, etc.

© 2018 California Department of Transportation. All Rights Reserved.

UTILITY OVERHEAD PROVISIONS (OH)

TR – 0162 (Rev. 10/2019)

In addition to the attached General Provisions (TR-0045), the following special provisions are also applicable:

OH1. LOCATION POLE LINES, ETC.: Pole lines shall be located as specifically directed in the provisions of the permit.

OH2. INSTALLATIONS AND CLEARANCES: Horizontal clearances, as measured from the edge of traveled way to the installation must be in accordance with the minimum clearance required for Discretionary Fixed Objects. According to Caltrans' Highway Design Manual (309.1) The installation should be located beyond the clear recovery zone at a minimum of 52 feet horizontally or 8 feet vertically up-slope from the edge of traveled way, unless they are made breakaway or shielded behind existing guardrail, barrier or other safety device. In no case is a pole allowed closer than 1.5' behind a curb face or less than 2' from the edge of a slope catch point or 3' from the curb returns of intersections and near the edges of driveways, or within a drainage ditch. New installations should adhere to setback limits or should be protected. Consideration should be given to placing such encroachments underground in shoulder or parking areas. Also, installations and clearances must comply with applicable orders of the California Public Utilities Commission (CPUC), or the Division of Occupational Safety and Health (Cal/OSHA) Safety Orders, whichever is more restrictive.

OH3. PERMISSION FROM PROPERTY OWNERS: When necessary, permission must be secured from the abutting property owner(s) in written form by the permittee before starting work.

OH4. CLEARANCE OF TREES: Unless otherwise specifically required by the Department, protected cables, tree wires or plastic tree wire guards used for communication lines may be used through trees where necessary, provided the installation and any necessary pruning does not damage or affect the appearance of the tree or the tree itself will not be damaged. This allowance does not apply to scenic highways.

OH5. GUY WIRES: No guy wires are to be attached to trees except as may be specified in the permit and in no event must they be so attached as to girdle the tree or interfere with its growth. Guy wires must be kept to a minimum elevation above ground as directed.

OH6. ANCHOR: Anchors must not be placed closer to the traveled way than the pole itself.

OH7. REMOVE OLD POLES, GUY, and STUBS: The entire length of poles and stubs must be removed from the ground and the holes backfilled. Guy rods must be removed to a minimum depth of 3' below original ground.

OH8. AERIAL CROSSING: Works involving new or additions to existing aerial crossings must not be performed in rainy, foggy or inclement weather which creates hazardous conditions for highway users.

OH9. CLEARANCE FROM CURBS: The face of poles must not be placed closer than 1.5' from any curb face.

OH10. POLE INSTALLATION OR REMOVAL: Where poles are to be installed or removed behind the curb in a parkway that is paved with Portland Cement Concrete, the concrete must be saw cut, removed and replaced to the nearest score lines or expansion joints. The hole in the PCC sidewalk created by pole removal must be temporarily backfilled with 2" minimum temporary AC at the time the pole is removed. Poles are not to be installed without prior approval of the final location by the Department's field representative.

OH11. CONTROLLED ACCESS R/W: Poles, anchors, etc., must not be installed inside of any controlled access right of way. All such requests are "exceptions" to policy.

© 2018 California Department of Transportation. All Rights Reserved.

UTILITY UNDERGROUND PROVISIONS (UG)

TR - 0163 (Rev. 04/2018)

In addition to the attached General Provisions (TR-0045), the following special provisions are also applicable:

High priority utilities, pressurized facilities, pipes or ducts 6" or larger in diameter, or placement of multiple pipes or ducts, regardless of diameters are required to be encased on both conventional and access-controlled highway rights-of-way.

A “High Priority Utility” is defined as: 1) a natural gas pipeline greater than 6” in diameter, or with normal operating pressures greater than 60 psig, 2) petroleum pipelines, 3) pressurized sanitary sewer pipelines, 4) high-voltage electric supply lines, conductors, or cables that have a potential to ground of greater than or equal to 60 kV, or 5) hazardous materials pipelines that are potentially harmful to workers or the public if damaged.

An exception to this policy may be allowed on a case by case basis for the installation of Uncased High-Pressure Natural Gas Pipelines when in compliance with the TR-0158 Special Provisions.

The pavement or roadway must not be open-cut unless specifically allowed under a separate “UT” permit. Utility installations must not be installed inside of culverts or drainage structures.

For additional details regarding longitudinal utility encroachments on both conventional and access-controlled highway rights-of-way, see Chapter 600.

UG 1. CASINGS: Casings must be steel conduit with a minimum inside diameter sufficiently larger than the outside diameter of the pipe or ducts to accommodate placement and removal. The casing can be either new or used steel pipe, or an approved connector system. Used pipe must be pre-approved by the Department's engineer or representative before installation.

When the method of Horizontal Directional Drilling (HDD) is used to place casing, the use of High Density Polyethylene Pipe (HDPE) as casing is acceptable.

Reinforced Concrete Pipe (RCP) in compliance of State Standard Specifications is an acceptable carrier for storm drain gravity flow or non-pressure flow. RCP when installed by Bore &Jack must have rubber gaskets at the joints, and holes for grouting of voids left by jacking operations, see “E” below.

A. Minimum wall thickness for steel pipe casing for different lengths and diameters of pipes are as follows:

Minimum Wall Thickness

Casing Pipe (Diameter)	**Up to 150 ft** (Length)	**Over 150 ft** (Length)
6" to 28"	1/4"	1/4"
30" to 38"	3/8"	1/2"
40" to 60"	1/2"	3/4"
62" to 72"	3/4"	3/4"

B. Spiral welded casing is authorized provided the casing is new and the weld is smooth.

C. The ends of the casing must be plugged with ungrouted bricks or other suitable material approved by the Department’s representative.

D. When required by the Department's representative, the permittee must at his expense, pressure grout the area between the pavement and the casing from within the casing in order to fill any voids caused by the work covered under this permit. The increments for grout holes inside the pipe must be 8' staggered and located 22-1/2 degrees from vertical axis of the casing. Pressure must not exceed 5 psig for a duration sufficient to fill all voids.

E. There is a spacing requirement when placement of multiple encasements is requested. The distance between multiple encasements must be the greater of either 24” or twice that of the diameter of the larger pipe being installed.

F. Casings placed within access controlled highway rights-of-way must extend to the right-of-way lines.

G. Wing cutters, if used, must be a maximum of 1" larger than the casing. Voids caused by the use of wing cutters must be grouted in accordance with "E" above.

H. A band welded to the leading edge of the casing must be placed square to the alignment. The band must not be placed on the bottom edge. Flaring the lead section on bores over 100' must not be permitted.

© 2018 California Department of Transportation. All Rights Reserved.

I. All casing lengths must equal to the auger length.

J. The casings within conventional highways must extend 5' beyond the back of curb or edge of pavement, or to the right of way line if less. Where PCC cross-gutter exists, the casing must extend at least 5' beyond the back of the cross-gutter, or to the right of way line if less.

Bore and receiving pits must:

A. be located at least 10' or more from the edge of pavement on conventional highways in rural areas.

B. be located 5' behind the concrete curb or AC dike on conventional highways in urban areas.

C. be located 5' outside the toe of slope of embankment areas.

D. be located outside access controlled highway rights-of-way.

E. be adequately fenced and/or have a Type-K barrier placed around them.

F. be adequately shored in accordance with Cal-OSHA requirements. Shoring for jacking and receiving pits located within 15' of traffic lanes on a State highway must not extend more than 36" above the pavement grade unless otherwise authorized by Department's representative. Reflectors must be affixed to the shoring on the sides facing traffic. A 6' chain link fence must be installed around the perimeter of the pits during non-working hours.

G. have crushed-rock and sump areas to clear groundwater and water used to clean the casing. Where ground water is found and pumping is required, the pits must be lined with filter fabric.

UG 2. HORIZONTAL DIRECTIONAL DRILLING: Bore and receiving pits

When HDD is the approved method for pipe installation, drilling plans must contain information listed as follows:

1. Location of: entry and exit point, access pit, equipment, and pipe staging area.
2. Proposed drill path alignment (horizontal and vertical).
3. Location and clearances of all other facilities.
4. Depth of cover.
5. Soil analysis.*
6. Carrier pipe length, diameter, thickness, and material (HDPE/steel) and ream pipe diameter.
7. Detailed carrier pipe calculations confirming ability to withstand installation loads and long-term operational loads including H20.
8. Proposed drilling fluid composition, viscosity, and density (based on soils analysis).
9. Drilling fluid pumping capacity, pressures, and flow rates
10. State right-of-way lines, property, and utility right of way or easement lines.
11. Elevations.
12. Type of tracking method/system and accuracy used.
13. A detailed plan for monitoring ground surface movement (settlement or heave) resulting from the drilling operation.

* May be waived by the District Permit Engineer for HDD jobs less than 6" in diameter and a traverse crossing less than 150'.

UG 3. LIMIT OF EXCAVATION: No excavation is allowed within 10' from the edge of pavement except in curbed urban areas or as specified in the permit. Where no curb exists and excavations within 10' of the traveled way are to remain open, a temporary Type-K railing must be placed at a 10:1 taper or as otherwise directed by the Department.

UG 4. TUNNELING: Review, requirements of Section 603.6A-6 of the Encroachment Permits Manual, if applicable. In addition to the requirements of **"UG1"** the following requirements apply:

A. For the purpose of this provision, a tunnel is defined as any pipe, 30" or larger in diameter placed.
B. When tunneling is authorized, the permittee must provide full-time inspection of tunneling operations. The Department's representative must monitor projects.
C. A survey grid must be set and appropriately checked over the centerline of the pipe jacking or tunneling operation. Copies of the survey notes must be submitted to the Department's representative.
D. Sand shields may be required as ground conditions change.
E. The method used to check the grade and alignment must be approved by the Department's representative.
F. Pressure grouting for liner plates, rib and spiling, or rib and lagging tunnels must be at every 8' section or at the end of work shift before the next section is excavated. All grouting must be completed at the end of each workday.
G. A method for securing the headway at the end of each workday is required. Breastplates must be

© 2018 California Department of Transportation. All Rights Reserved.

installed during working hours for running sand or super-saturated soil.

UG 5. CLEARANCE AND OFFSET REQUIREMENTS: All installations must comply with Chapter 17, Article 4 of the Project Delivery Procedures Manual (PDPM) for utility clearance and offset requirements.

UG 6. FACILITIES EXEMPT FROM THE HIGH PRIORITY UTILITY REQUIREMENTS: The following utilities (not including State owned utilities) are exempt from these policies and do not need to be plotted on the plans unless the depiction of the utility is needed for interconnectivity with the proposed work:

- Natural gas service lines less than 2 inches in pipe diameter that have normal operating pressures of 60 psig or less
- Subsurface electrical service connections with a potential to ground of 50 volts or less
- Service connections (laterals) for water, sewer, telephone, telecommunication, and cable service

All State owned utilities must be plotted on the plans.

UG 7. DETECTOR STRIP: A continuous metallic detector strip must be provided with non-metallic main installations. Service connections must be installed at right angles to the centerline of the State highway where possible.

UG 8. BACKFILLING: All backfilling must conform to the applicable sections of the Department's Standard Specifications. Ponding or jetting methods of backfilling are prohibited.

Any required compaction tests must be performed by a certified laboratory at no cost to the Department and the laboratory report furnished to the Department's representative.

UG 9. ROADWAY SURFACING AND BASE MATERIALS: When the permit authorizes installation by the open cut method, surfacing and base materials and thickness thereof must be as specified in the permit.

Temporary repairs to pavements must be made and maintained upon completion of backfill until permanent repairs are made. Permanent repairs to pavements must be made within thirty (30) days of completion of backfill unless otherwise specified by the Department. Temporary pavement patches must be placed and maintained in a smooth riding plane free of humps and/or depressions.

UG 10. DAMAGE TO TREE ROOTS: Tree roots 3" or larger in diameter will not be cut within the tree drip line when trenching or other underground work is necessary adjacent to roadside trees. If such roots are encountered, they must be tunneled under, wrapped in burlap and kept moist until the trench is backfilled. Trenching machines may not be used under trees if the trunk or limbs will be damaged by their use.

If the trees involved are close together and of such size that it is impractical to protect all roots over 3" in diameter, or when roots are less than 4" in diameter, outside tree drip line, special arrangements may be made whereby pruning of the tree tops to balance the root loss can be done by the permittee under the close supervision of the District Landscape Specialist or District Tree Maintenance Supervisor. Manholes must not be installed within 20' of any trunk.

UG 11. PIPES ALONG ROADWAY: Pipes and conduits paralleling the pavement must be located as shown on the plans or located outside of pavement as close as possible to the right-of-way line.

UG 12. BORROW AND WASTE: Borrow and waste will be allowed within the work limits only as specified in the permit.

UG 13. MARKERS: The permittee must not place any markers that create a safety hazard for the traveling public or departmental employees.

UG 14. CATHODIC PROTECTION: The permittee must perform stray current interference tests on underground utilities under cathodic protection. The permittee must notify the Department prior to the tests. The permittee must perform any necessary corrective measures and advise the Department.

UG 15. DELETED. Provision left blank intentionally

UG 16. INSTALLATION BY OPEN CUT METHOD: When the permit authorizes installation by the open cut method no more than one lane of the highway pavement must be open-cut at any one time. Any exceptions must be in writing by the Department's representative. After the pipe is placed in the open section, the trench is to be backfilled in accordance with specifications, temporary repairs made to the surfacing and that portion opened to traffic before the pavement is cut for the next section.

If, at the end of the working day, backfilling operations have not been properly completed, steel plate bridging must be required to make the entire highway facility available to the traveling public in accordance with the "Steel Plate Bridging Special Provisions" (TR-0157)

© 2018 California Department of Transportation. All Rights Reserved.

UG 17. PAVEMENT REMOVAL: PCC pavement to be removed must be saw cut at a minimum depth of 4" to provide a neat and straight pavement break along both sides of the trench. AC pavement must be saw cut to the full depth.

Where the edge of the trench is within 2' of existing curb and gutter or pavement edge, the asphalt concrete pavement between the trench and the curb or pavement edge must be removed.

UG 18. DELETED. Provision left blank intentionally.*

UG 19. SIDES OF OPEN-CUT TRENCHES: Sides of open cut trenches in paved areas must be kept as nearly vertical as possible. Trenches must not be more the 2' wider than the outside diameter of the pipe to be laid therein, plus the necessary width to accommodate shoring.

UG 20. EXCAVATION UNDER FACILITIES: Where it is necessary to excavate under existing curb and gutter, or underground facilities, the void must be backfilled with two (2) sack cement-sand slurry.

UG 21. PERMANENT REPAIRS TO PCC PAVEMENT: Repairs to PCC pavement must be made of Portland Cement Concrete containing a minimum of 658 lbs. or 7 sack of cement per cubic yard. Replaced PCC pavement must equal existing pavement thickness. The concrete must be satisfactorily cured and protected from disturbance for not less than forty-eight (48) hours. Where necessary to open the area to traffic, no more than two (2%) percent by weight of calcium chloride may be added to the mix and the road opened to traffic after six (6) hours.

UG 22. REMOVAL OF PCC SIDEWALKS OR CURBS: Concrete sidewalks or curbs must be saw cut to the nearest score marks and replaced equal in dimension to that removed with score marks matching existing sidewalk or curb.

UG 23. SPOILS: No earth or construction materials are to be dragged or scraped across the highway pavement, and no excavated earth placed or allowed to remain at a location where it may be tracked onto the highway traveled way, or any public or private approach by the permittee's construction equipment, or by traffic entering or leaving the highway traveled way. Any excavated earth or mud so tracked onto the highway pavement or public or private approach must be immediately removed by the permittee.

*NOTE: Special Provision was deleted since it is already part of the EP General Provisions (TR-0045)

© 2018 California Department of Transportation. All Rights Reserved.

VIBRIO GENERATING EQUIPMENT (GV)

In addition to the attached General Provisions (TR-0045), the following special provisions are also applicable.

1. Equipment shall not be operated on any pavement or other paved surface.
2. Equipment shall not be operated within access-controlled rights of way.
3. Equipment shall be placed and operated as close to the right of way line as possible.
4. Equipment shall be operated so that no damage will occur to trees, plants, wells, culverts, headwalls, structures or other improvements.
5. This permit does not authorize the shear wave method.
6. Equipment shall not be parked on or operated on the traveled way except for normal legal travel.
7. Personnel working within the State right of way shall wear hard hats and orange jackets, shirts or vests.
8. All mud, dirt or gravel tracked onto the highway pavement shall be immediately and completely removed.
9. Dirt areas within the State right of way disturbed by Geophysical testing operations shall be graded back to its original shape and grade.

© 2018 California Department of Transportation. All Rights Reserved.