6.4.3.1—High-Strength Structural Fasteners

6.4.3.1.1—High-Strength Bolts

Add a new 3rd paragraph as follows:

ASTM F3125 Grade A490 and Grade F2280 bolts, ASTM A354 Grade BD fasteners, and ASTM A722 bars shall not be galvanized. No cleaning process shall be used that will introduce hydrogen into steel.

C6.4.3.1.1

Replace the 2nd paragraph with the following:

Galvanizing is not an acceptable option within ASTM F3125 for Grade A490 and Grade F2280 bolts, but Grade A490 bolts may be coated with a zinc/aluminum coating in accordance with ASTM F1136 or F2833. Galvanization of ASTM F3125 Grade 490 and Grade F2280 bolts, ASTM A354 Grade BD fasteners, and ASTM A722 bars is not permitted due to potential hydrogen embrittlement.

6.4.3.3—Fasteners for Structural Anchorage

6.4.3.3.1—Anchor Rods

Replace the 1st paragraph with the following:

Anchor rods shall conform to ASTM F1554. ASTM F1554 Grade 105 anchor rods shall not be galvanized. No cleaning process shall be used that will introduce hydrogen into steel.

C6.4.3.3.1

Replace the 1st paragraph with the following:

Fasteners for structural anchorage are covered in a separate article so that other requirements for high-strength bolts are not applied to anchor rods. The term anchor rods, which is used in these Specifications, is considered synonymous with the term anchor bolts which has been used. Galvanization of ASTM F1554 Grade 105 anchor rods is not permitted due to potential hydrogen embrittlement. These rods should be carefully evaluated before use with applicable protective coatings conforming to ASTM F1554 Specifications.

6.6.1.2.5—Fatigue Resistance

Replace Table 6.6.1.2.5-2 with the following:

Table 6.6.1.2.5-2—Cycles per Truck Passage, *n*.

Longitudinal Members	
Simple Span Girders	1.0
Continuous Girders: 1) near interior support 2) elsewhere	1.5 (HL-93) 1.2 (P9) 1.0
Cantilever Girders	5.0
Orthotropic Deck Plate Connections Subjected to Wheel Load Cycling	5.0
Trusses	1.0
Transverse Members	
Spacing > 20.0 ft	1.0
Spacing ≤ 20.0 ft	2.0

C6.6.1.2.5

Add a new last paragraph as follows:

Cycles per Permit Truck (P9) passage are evaluated by the rainflow method. The numbers of cycles induced by Permit Truck (P9) passage are somewhat similar to the cycles induced by the HL-93 truck used for Fatigue I Limit State.

This page intentionally left blank.

6.10.7.1.2—Nominal Flexural Resistance

Replace Eq. 6.10.7.1.2-2 with the following:

$$M_n = \left[1 - \left(1 - \frac{M_y}{M_p}\right)\left(\frac{\frac{D_p}{D_t} - 0.1}{0.32}\right)\right] M_p \qquad (6.10.7.1.2\text{-}2)$$

C6.10.7.1.2

Replace the 2nd paragraph with the following:

Eq. 10.7.1.2-2 defines the inelastic moment resistance as a straight line between the ductility limits D_p/D_t = 0.1 and 0.42. It gives approximately the same results as the comparable equation in previous Specifications, but is a simpler form that depends on the plastic moment resistance M_p, the yield moment resistance M_y, and the ratio D_p/D_t.

This page intentionally left blank.

6.10.8.2.3—Lateral Torsional Buckling Resistance

Replace C_b related Equations (6.10.8.2.3-6) and (6.10.8.2.3-7), and related symbols as follows:

- For cantilevers where the free end is unbraced:

$$C_b = 1.0 \qquad (6.10.8.2.3\text{-}6)$$

- For all other cases:

$$C_b = \frac{12.5\, M_{max}}{2.5\, M_{max} + 3\, M_A + 4\, M_B + 3\, M_C} \qquad (6.10.8.2.3\text{-}7)$$

where:

M_{max} = absolute value of maximum moment in the unbraced segment (kip-in.)
M_A = absolute value of moment at quarter point of the unbraced segment (kip-in.)
M_B = absolute value of moment at centerline of the unbraced segment (kip-in.)
M_C = absolute value of moment in three-quarter point of the unbraced segment (kip-in.)

- For reverse curvature bending:

$$R_m = 0.5 + 0.2\left(\frac{I_{y,top}}{I_y}\right)^2 \qquad (C6.10.8.2.3\text{-}3)$$

where:

$I_{y,top}$ = moment of inertia of the flange above the geometric centroid of the section about an axis through the web (in.^{4})
I_y = moment of inertia of the entire section about an axis through the web (in.^{4})

C6.10.8.2.3

Replace the 8th (Pages 6-159) to 16th paragraphs (Page 6-162) as follows:

Equation $C_b = 1.75 - 1.05\left(\frac{M_1}{M_2}\right) + 0.3\left(\frac{M_1}{M_2}\right)^2$ and $C_b = 1.75 - 1.05\left(\frac{f_1}{f_2}\right) + 0.3\left(\frac{f_1}{f_2}\right)^2$ have been used in *AISC Specification* from 1961 to 1986, and in *AASHTO LRFD Bridge Design Specifications* since 1994, respectively. Those equations are only applicable to linearly varying moment diagrams between the braced points – a condition that is rare in bridge girder design. Those equations can be easily misinterpreted and misapplied to moment diagrams that are not linear within the unbraced segment. *AISC Specification* (1993) and Caltrans BDS (2004) have adopted Eq. (6.10.8.2.3-7) originally developed by Kirby and Nethercot (1979) with slight modifications. Eq. (6.10.8.2.3-7) provides a more accurate solution for unbraced lengths in which the moment diagram deviates substantially from a straight line, such as the case of a continuous bridge girder with no lateral bracing within the span, subjected to dead and live loads.

Eq. (6.10.8.2.3-7) is applicable for doubly symmetrical sections. For singly symmetrical I-shaped sections, the following expression developed by Heldwig et al. (1997) may be used:

$$C_b = \left[\frac{12.5\, M_{max}}{2.5\, M_{max} + 3\, M_A + 4\, M_B + 3\, M_C}\right] R_m \le 3.0 \qquad (C6.10.8.2.3\text{-}1)$$

- For single curvature bending:

$$R_m = 1.0 \qquad (C6.10.8.2.3\text{-}2)$$

This page intentionally left blank.

6.10.10.4.2—Nominal Shear Force

Replace Eq. (6.10.10.4.2-8) with the following:

$$P_{2n} = F_{yrs}A_{rs} \qquad (6.10.10.4.2\text{-}8)$$

where:

A_{rs} = total area of the longitudinal reinforcement within the effective concrete deck width (in.^{2})

F_{yrs} = specified minimum yield strength of longitudinal reinforcement within the effective concrete deck width (ksi)

This page intentionally left blank.

6.10.11.1—Transverse Stiffeners

6.10.11.1.1—General

Replace the 2nd paragraph with the following:

Stiffeners not used as connection plates shall be welded to the compression flange and fitted tightly to the tension flange. Single-sided stiffeners on horizontally curved girders shall be attached to both flanges.

Replace the 4th paragraph with the following:

The distance between the end of the web-to-stiffener weld and the near edge of the adjacent web-to-flange or longitudinal stiffener-to-web weld shall not be less than $4t_w$, nor more than $6t_w$. In no case shall the distance exceed 4.0 in.

This page intentionally left blank.

6.13—CONNECTIONS AND SPLICES

6.13.1—General

Replace the 1st paragraph with the following:

Except as specified herein, connections and splices for primary members subject only to axial tension or compression shall be designed at the strength limit state for not less than 100 percent of the factored axial resistance of the member or element.

Replace the 2nd paragraph with the following:

Connections and splices for primary members subjected to combined force effects, other than splices for flexural members, shall be designed at the strength limit state for not less than 100 percent of the factored axial resistance of the member determined as specified in Articles 6.8.2 or 6.9.2, as applicable.

C6.13.1

Replace the 1st paragraph with the following:

For primary members subjected to force effects acting in multiple directions due to combined loading, such as members in rigid frames, arches, and trusses, a clarification of the design requirements is provided herein related to the determination of the factored resistance of the member. Connections and splices for such members are to be designed for 100 percent of the factored axial resistance of the member. The 100 percent resistance requirement is retained to provide a minimum level of stiffness and to be consistent with past practice for the design of connections and splices for axially loaded members.

Replace the 4th paragraph of the article with the following:

Where diaphragms, cross-frames, lateral bracing, stringers, or floorbeams for straight or horizontally curved flexural members which are non-primary members are included in the structural model used to determine force effects, or alternatively, are designed for explicitly calculated force effects from the results of a separate investigation, end connections for these bracing members shall be designed for the calculated factored member force effects. Otherwise, the end connections for these members shall be designed for 75 percent of the factored resistance of the member.

6.13.6.1.3b—Flange Splices

Delete the 3rd paragraph

C6.13.6.1.3b

Delete the 3rd and 4th paragraphs

This page intentionally left blank.

6.13.6.1.3c—Web Splices

Replace the 1st to 3rd paragraphs with the following:

As a minimum, web splice plates and their connections shall be designed at the strength limit state for a design web force taken equal to the following two cases:

- The smaller factored shear resistance of the web at the point of splice determined according to the provisions of Article 6.10.9 or 6.11.9, as applicable.
- The portion of the smaller total factored plastic moment carried by the web.

C6.13.6.1.3c

Replace the 3rd to 4th paragraphs with the following:

Figure C6.13.6.1.3c-1 shows stress distribution of web in the plastic moment state. The portion of the flexural moment carried by the web can be expressed by the combination of a design moment, M_{uw}, and a design horizontal force resultant, H_{uw}, applied at the mid-depth of the web at the point of the splice. This horizontal force resultant may be assumed distributed equally to all web bolts.

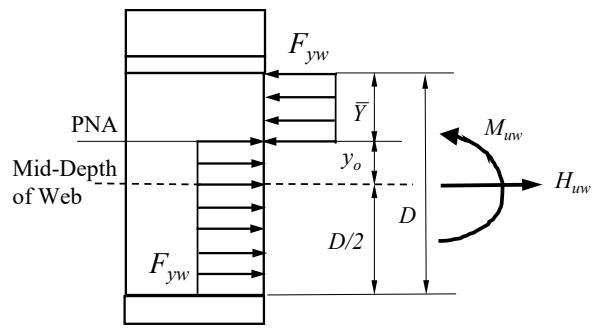

Figure C6.13.6.1.3c-1—Stress Distribution of Web at Plastic Moment State

$$M_{uw} = \phi_f \frac{t_w F_{yw}}{4}(D^2 - 4y_o^2)$$

(C6.13.6.1.3c-1)

$$H_{uw} = \phi_f (2t_w y_o F_{yw})$$

(C6.13.6.1.3c-2)

If the plastic neutral axis is within the web,

$$y_o = \frac{D}{2} - \bar{Y} \qquad \text{(C6.13.6.1.3c-3)}$$

Otherwise:

$$y_o = \frac{D}{2}$$

where:

t_w = web thickness (in.)
D = web depth (in.)
F_{yw} = specified minimum yield strength of the web at the point of splice (ksi)
y_o = distance from the mid-depth of the web to the plastic neutral axis (in.)
$\bar{Y}$ = distance from the plastic neutral axis to the top of the element where the plastic neutral axis is located (in.)
ϕ_f = resistance factor for flexure specified in Article 6.5.4.2

6.13.6.1.3c—Web Splices

Replace the 6th paragraph with the following:

As a minimum, bolted connections for web splices shall be checked for slip under Load Combination Service II, as specified in Table 3.4.1-1, or due to the deck casting sequence, at the point of splice, whichever governs, for the following two cases:

- Shear.
- Portion of the moment carried by the web.

C6.13.6.1.3c

Add the following after the 4th paragraph:

Figure C6.13.6.1.3c-2 shows flexural stress distribution of web under Load Combination Service II or due to deck casting sequence. The portion of the flexural moment carried by the web can be expressed by the combination of a design moment, M_{uw}, and a design horizontal force resultant, H_{uw}, applied at the mid-depth of the web at the point of the splice. This horizontal force resultant may be assumed distributed equally to all web bolts.

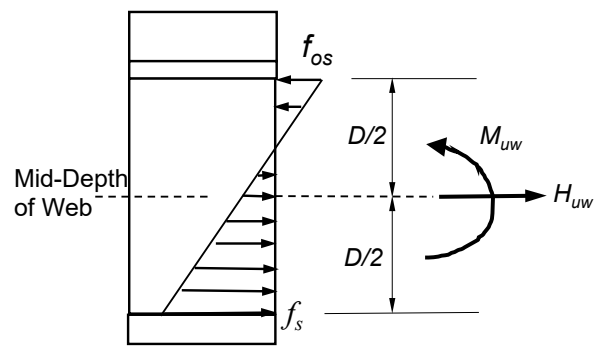

Figure C6.13.6.1.3c-2—Stress Distribution of Web at Factored Moment State

$$M_{uw} = \frac{t_w D^2}{12} |f_s - f_{os}| \qquad \text{(C6.13.6.1.3c-4)}$$

$$H_{uw} = \frac{t_w D}{2} (f_s + f_{os}) \qquad \text{(C6.13.6.1.3c-5)}$$

where:

f_s = larger flexural stress at the inner fiber of the flange under consideration for the smaller section at the point of splice (positive for tension and negative for compression) (ksi)

f_{os} = flexural stress at the inner fiber of the other flange of the smaller section at the point of splice concurrent with f_s (positive for tension and negative for compression) (ksi)

Flexural stress, f_s and f_{os} are to be computed considering the application of the moments due to the appropriate factored loadings to the respective cross-sections supporting those loadings.

6.13.6.2—Welded Splices

C6.13.6.2

Add the following as the 2nd paragraph:

Unnecessary field splices should be avoided. Welded field splices are subject to less control over the welding conditions and accessibility to the piece being welded. Additionally, access or cope holes detailed to allow for field welding activities are subjected to applied tension and/or stress reversal.

This page intentionally left blank.

6.14.2.8—Gusset Plates

6.14.2.8.1—General

Add the following before the 1st paragraph:

Gusset plates, fasteners, and welds connecting main members shall be designed at the strength limit state for not less than 100 percent of the factored resistances of the member.

Gusset plates, fasteners, and welds connecting other members shall be designed at the strength limit state for not less than the factored force effects of the member.

C6.14.2.8.1

Add the following after the 2nd paragraph:

Major revisions are based on Caltrans successful practice and *Caltrans Seismic Design Specifications for Seismic Design of Steel Bridges* (Caltrans 2016).

This page intentionally left blank.

6.14.2.8.7—Edge Slenderness

Add the following after the 1st paragraph:

For stiffened edge, the following requirements shall be satisfied:

- For welded stiffeners, slenderness ratio of the stiffener plus a width of gusset plate equal to ten times its thickness shall be $l/r \leq 40$.
- For bolted stiffeners, slenderness ratio of the stiffener between fasteners shall be $l/r \leq 40$.
- The moment of inertia of the stiffener shall be

$$I_s \geq \begin{cases} 1.83t^4\sqrt{(b/t)^2\text{-}144} \\ 9.2t^4 \end{cases} \quad (6.14.2.8.7\text{-}2)$$

where:

I_s = moment of inertia of a stiffener about its strong axis (in.^{4})
b = width of a gusset plate perpendicular to the edge (in.)
t = thickness of a gusset plate (in.)

Add three new Articles 6.14.2.8.8 to 6.14.2.8.10 as follows:

6.14.2.8.8—Flexural Resistance

The factored flexural resistance of a gusset plate, M_r, shall be taken as:

$$M_r = \phi_f S F_y \quad (6.14.2.8.8\text{-}1)$$

where:

S = elastic section modulus of the Whitmore's section of a gusset plate (in.^{3})
ϕ_f = resistance factor for flexural specified in Article 6.5.4.2

6.14.2.8.9—Yielding Resistance under Combined Flexural and Axial Force Effects

The Whitmore's effective area and other critical areas of a gusset plate subjected the combined flexural and axial force effects shall satisfy the following equation:

$$\frac{M_{ux}}{M_{rx}} + \frac{M_{uy}}{M_{ry}} + \frac{P_u}{\phi A_f F_y} \leq 1.0 \qquad (6.14.2.8.9\text{-}1)$$

where:

ϕ = resistance factor for axial compression = 0.9, for axial tension yielding = 0.95
M_{ux} = factored moment about x-x axis of the gusset plate (k-in.)
M_{uy} = factored moment about y-y axis of the gusset plate (k-in.)
P_u = factored axial force (kip)
M_{rx} = factored flexural resistance about x-x axis of the gusset plate (in.^{3})
M_{ry} = factored flexural resistance about y-y axis of the gusset plate (in.^{3})
A_g = gross cross-sectional area of the Whitmore section (in.^{2})

6.14.2.8.10—Out-of-Plane Forces Consideration

For double gusset plate connections, out-of-plane moment shall be resolved into a couple of tension and compression forces acting on the near and far side plates.

C6.14.2.8.7

Replace the 1st paragraph with the following:

This Article is intended to provide good detailing practice to reduce deformations of free edges during fabrication, erection, and service versus providing an increase in the member compressive buckling resistance at the strength limit state. NCHRP Project 12-84 (Ocel, 2013) found no direct correlation between the buckling resistance of the gusset plate and the free edge slenderness. The moment of inertia of the stiffener that is required to develop the post buckling strength of a long plate has been experimentally determined by Eq. (6.14.2.8.2-2) (AISI, 1962).

6.17—REFERENCES

Add the following references:

AISI. 1962. *Light Gage Cold-Formed Steel Design Manual*, American Iron and Steel Institute, Washington, DC.

Caltrans, 2016 *Caltrans Seismic Design Specifications for Seismic Design of Steel Bridges*, Second Edition, California Department of Transportation, Sacramento, CA.

Caltrans. 2004. *Bridge Design Specifications, Section 10 – Structural Steel*, February 2004. California Department of Transportation, Sacramento, CA.

AISC. 1993. Load and Resistance Factor Design Specification for Structural Steel Buildings, American Institute of Steel Construction, Chicago, IL.

Kirby, P.A. and Nethercot, D.A. 1979, *Design for Structural Stability*, John Wiley & Sons Inc., New York, NY.

This page intentionally left blank.

A6.3.3—Lateral Torsional Buckling Resistance

Replace C_b notation with the following:

C_b = moment gradient modifier.

Delete the 4th and 5th bullets.

This page intentionally left blank.