DIST	COUNTY	ROUTE	POST MILES TOTAL PROJECT	SHEET No.	TOTAL SHEETS

REGISTERED CIVIL ENGINEER DATE

PLANS APPROVAL DATE

REGISTERED PROFESSIONAL ENGINEER No. Exp. CIVIL STATE OF CALIFORNIA

The State of California or its officers or agents shall not be responsible for the accuracy or completeness of scanned copies of this plan sheet.

The Registered Civil Engineer for the project is responsible for the selection and proper application of the component design and any modifications shown.

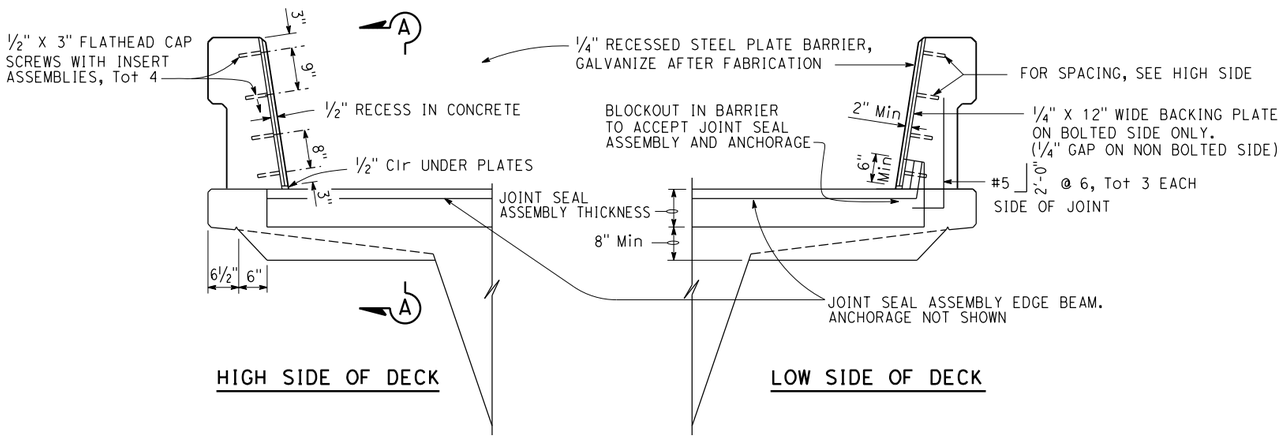

SEAL INSTALLATION

3/4" = 1'-0"

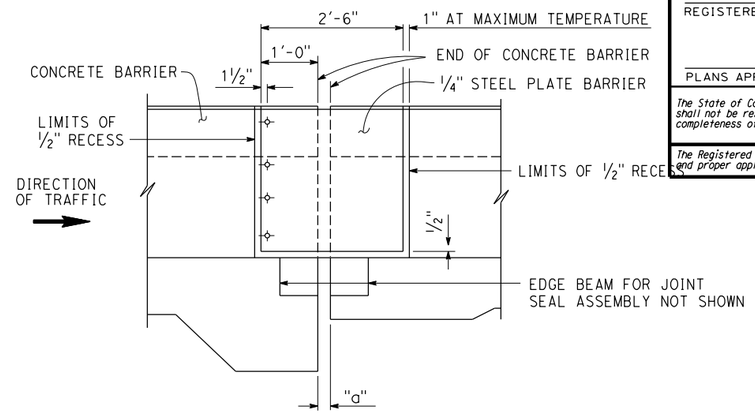

ELEVATION A-A

3/4" = 1'-0"

JOINT INFORMATION		"a" DIMENSIONS			
LOCATION	MOVEMENT RATING (MR)	SKEW	WINTER	SPRING & FALL	SUMMER

NOTES:
1. For details not shown, see Project Plans
2. x is greater than or equal to y

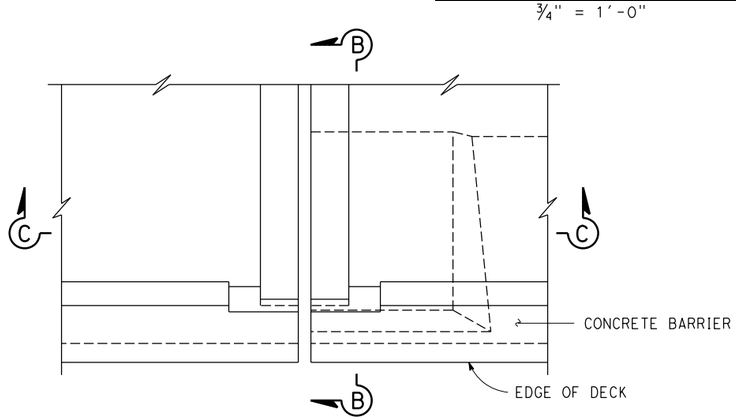

PLAN - DECK JOINT

3/4" = 1'-0"

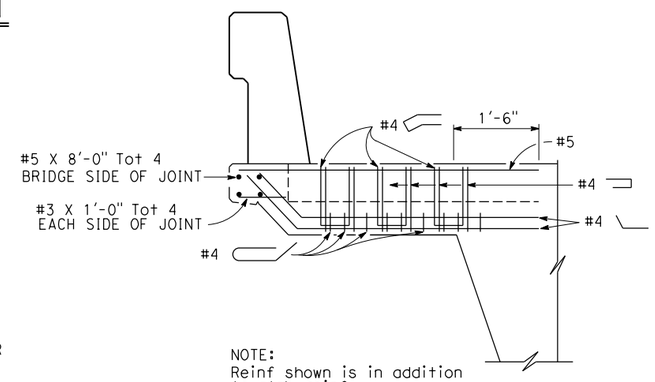

NOTE:
Reinf shown is in addition to slab reinf

SECTION B-B

3/4" = 1'-0"

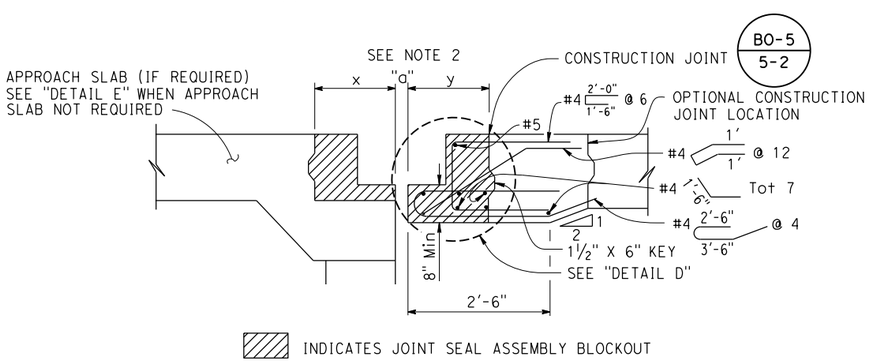

SECTION C-C

3/4" = 1'-0"

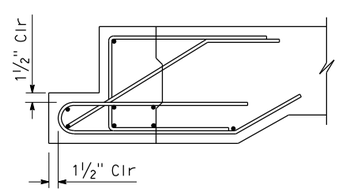

DETAIL D

1" = 1'-0"

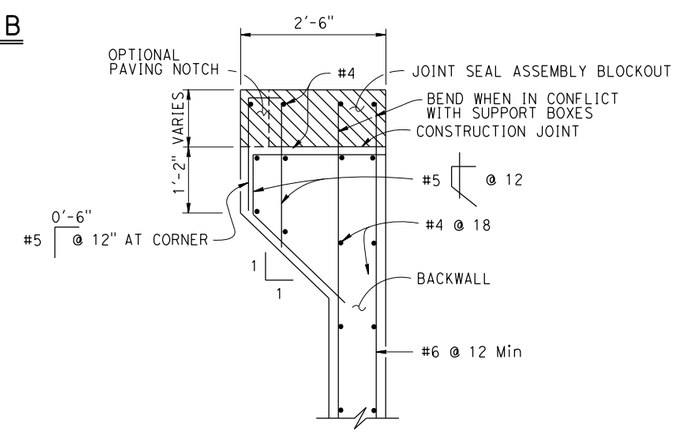

DETAIL E

3/4" = 1'-0"

BACKWALL WITHOUT APPROACH SLAB

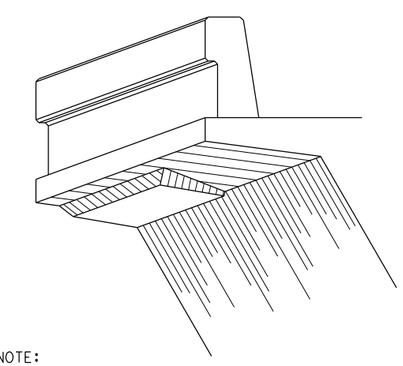

NOTE:
Abutment not shown

DECK OVERHANG AT ABUTMENT

NO SCALE

BRIDGE STANDARD DETAILS		
xs8-030	January 2021	*The components of the Bridge Standard Details have been prepared under the responsible charge of the Technical Owner, a registered civil engineer in the State of California*
FILE NO.	APPROVAL DATE	

Refer to: http://www.dot.ca.gov/hq/esc/techpubs/manual/bridgemanuals/bridge-standard-detail-sheets/index.html

STATE OF **CALIFORNIA** DEPARTMENT OF TRANSPORTATION

DIVISION OF ENGINEERING SERVICES

BRIDGE NO.

POST MILE

JOINT SEAL - ABUTMENT DETAILS MOVEMENT RANGE GREATER THAN 4"

FILE => $REQUEST
USERNAME => $USER *TIME PLOTTED => $TIME* *DATE PLOTTED => $DATE*

ORIGINAL SCALE IN INCHES FOR REDUCED PLANS 0 1 2 3

UNIT:
PROJECT NUMBER & PHASE:
CONTRACT NO.:

DISREGARD PRINTS BEARING EARLIER REVISION DATES

REVISION DATES: 6-23-14 1-8-16 01-15-21

SHEET OF