Dist	COUNTY	ROUTE	POST MILES TOTAL PROJECT	SHEET No.	TOTAL SHEETS

REGISTERED CIVIL ENGINEER X DATE

PLANS APPROVAL DATE

REGISTERED PROFESSIONAL ENGINEER X No. X Exp. X CIVIL STATE OF CALIFORNIA

THE STATE OF CALIFORNIA OR ITS OFFICERS OR AGENTS SHALL NOT BE RESPONSIBLE FOR THE ACCURACY OR COMPLETENESS OF SCANNED COPIES OF THIS PLAN SHEET.

LEGEND:

-·-·-·- Existing Structure

Polyethylene

D = Pipe Extension Outside Diameter

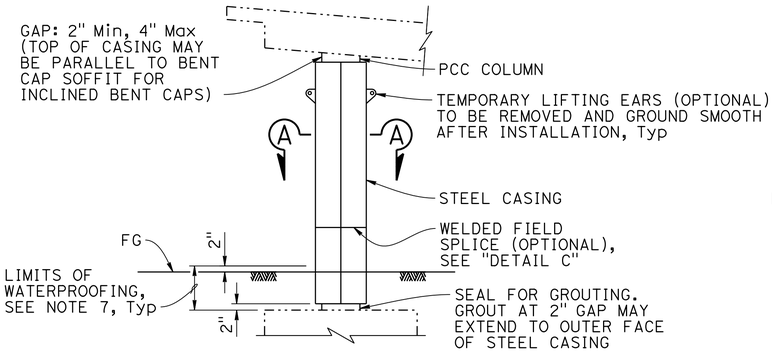

COLUMN CASING (TYPE F)

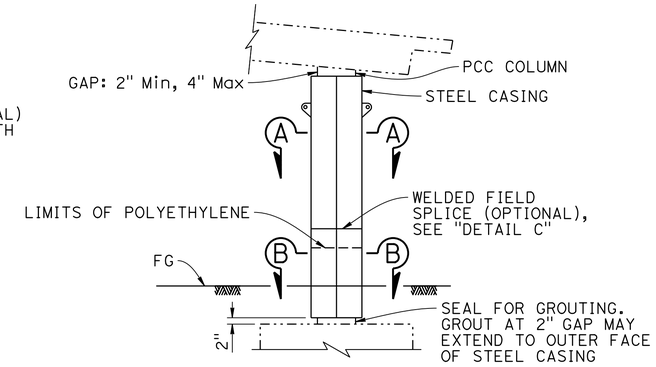

COLUMN CASING (TYPE P/F)

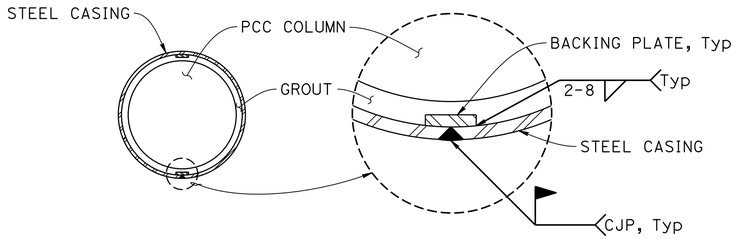

SECTION A-A

NOTE: Minimum distance between the column and inside surface of the casing = 1½" for Type F casing.

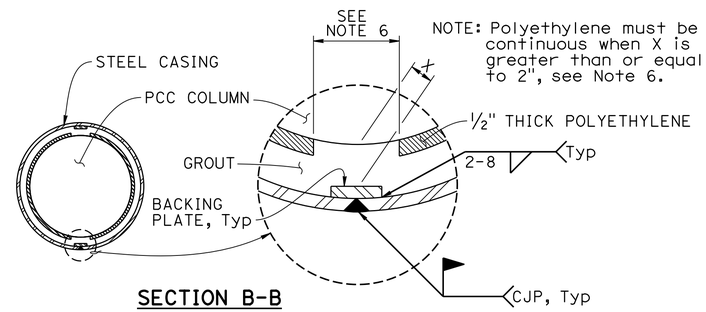

SECTION B-B

NOTE: Minimum distance between the column and inside surface of the casing = 2½" for Type P/F casing.

CIRCULAR COLUMN

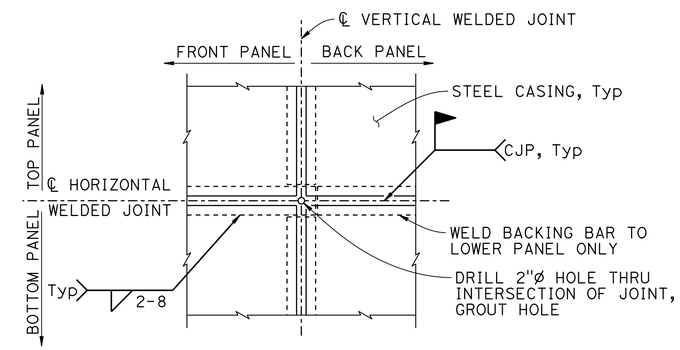

WELD FIELD SPLICE (OPTIONAL)

DETAIL C

NOTES:

1. For varying casing thickness, steel casing inside surface to remain flush. Minimum clearance from PCC column to casing shall be maintained.
2. Appropriate injection nozzles to be provided on casing, but removed and ground flush following completion of grouting operation.
3. For circular columns, all voids between steel casing and polyethylene (Type P/F) and steel casing and PCC column (Type F) to be filled with grout. For non-circular casings, all voids between steel casing and polyethylene (Type P/F) and steel casing and PCC column (Type F) to be filled with pea gravel grout as specified in Standard Specifications Section 60-4.06B(2).
4. Location and number of vertical and horizontal welds to be determined by the Contractor and subject to the approval of the Engineer. The location of casing welds are for illustration. No skip welds allowed.
5. Minimum casing thickness for circular and rectangular columns to be ⅜". Backing plate to be ⅜".
6. Contractor must remove 12" polyethylene strip behind backing plate if backing plate is closer than 2" from face of column.
7. Waterproof limits for steel casings. Typical for Type "F" and Type "P/F".
8. For pipe extensions, opening must be no more than ¼" greater than the pipe extension outside diameter. For other openings, the opening diameter to be determined by the Engineer.
9. Fillet weld shall be the same size as the thickness of opening steel plate reinforcement.

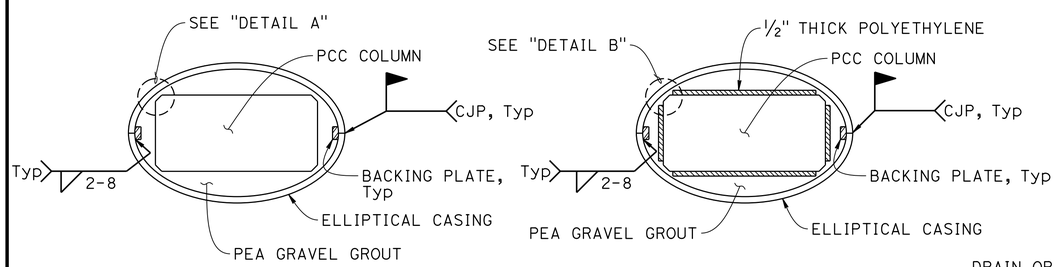

SECTION A-A

SECTION B-B

DETAIL A

DETAIL B

RECTANGULAR COLUMN

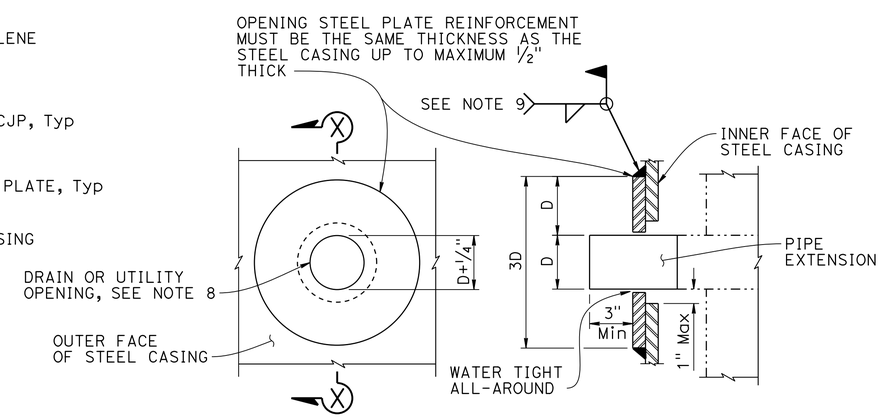

PART ELEVATION

SECTION X-X

CASING OPENING

NOTE: Opening steel plate reinforcement required for drain or utility openings larger than 4".

NO SCALE

BRIDGE STANDARD DETAILS					
xs7-010 (FILE No.)	AUGUST 2026 (APPROVAL DATE)	DESIGN	BY X	CHECKED X	
		DETAILS	BY X	CHECKED X	
		QUANTITIES	BY X	CHECKED X	

STATE OF CALIFORNIA DEPARTMENT OF TRANSPORTATION

DIVISION OF ENGINEERING SERVICES

BRIDGE No. XX-XXXX

POST MILE X.X

X

COLUMN CASING - STEEL

Refer to: http://www.dot.ca.gov/hq/esc/techpubs/manual/bridgemanuals/bridge-standard-detail-sheets/index.html

DATE PLOTTED => 6-AUG-2026 TIME PLOTTED => 11:11
FILE => xs7-010.dgn USERNAME => s148360

ORIGINAL SCALE IN INCHES FOR REDUCED PLANS 0 1 2 3

UNIT: XXXX
PROJECT NUMBER & PHASE: XXXXXXXXXX1

COUNTY/ROUTE/ZONE: XXX/XXX/X
CONTRACT No.: XX-XXXXX4

DISREGARD PRINTS BEARING EARLIER REVISION DATES

REVISION DATES: 02-06-26 07-21-26

SHEET X OF X