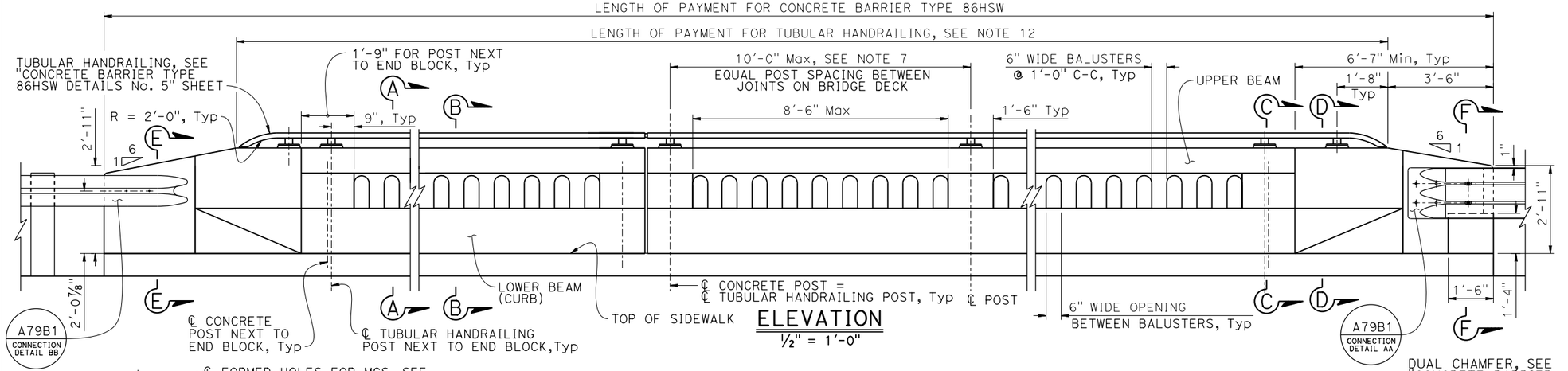

ELEVATION
½" = 1'-0"

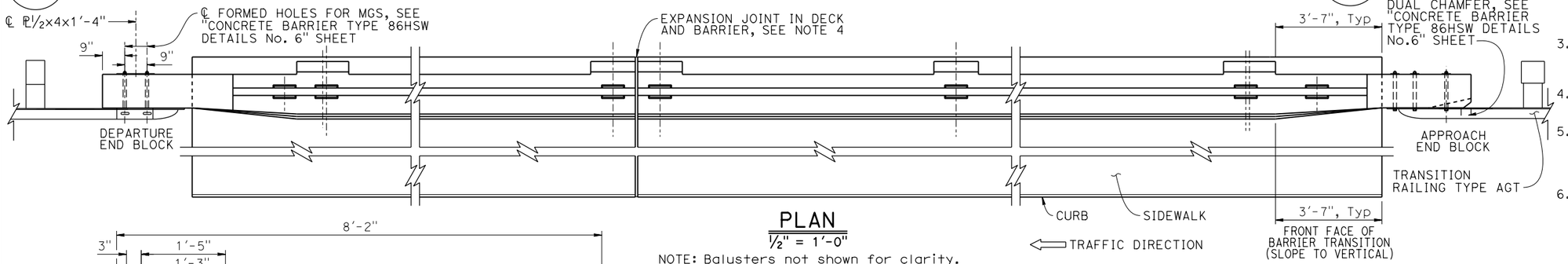

PLAN
½" = 1'-0"

NOTE: Balusters not shown for clarity.

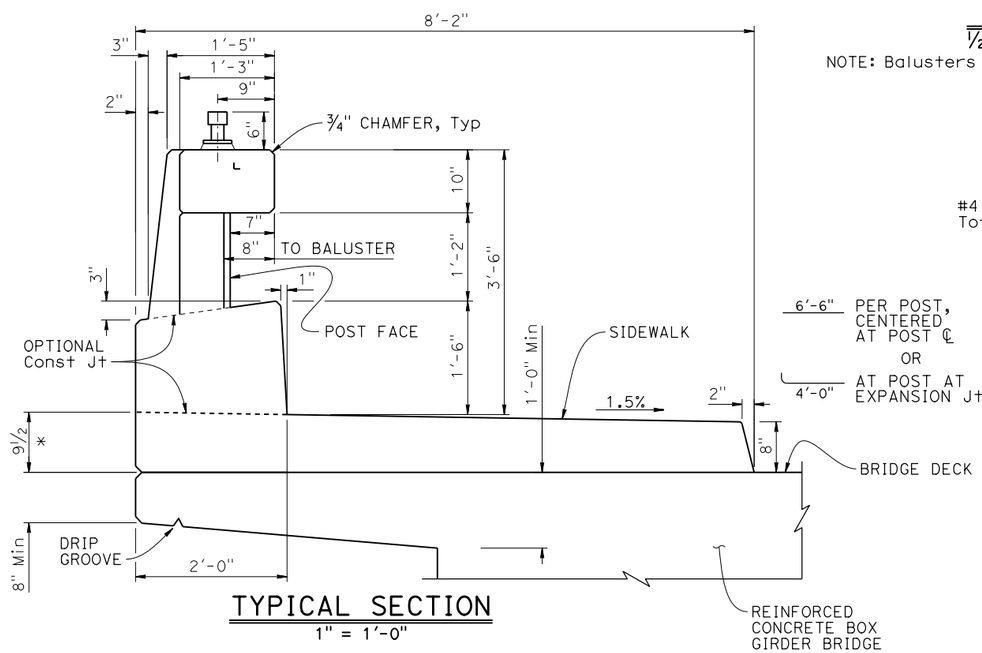

TYPICAL SECTION
1" = 1'-0"

* Dimension from top of bridge deck to top of sidewalk is determined by bridge cross-slope and by thickness of deck overlay due to increase in traffic side of sidewalk curb height by 2" max to match overlay depth if placed on the same contract.

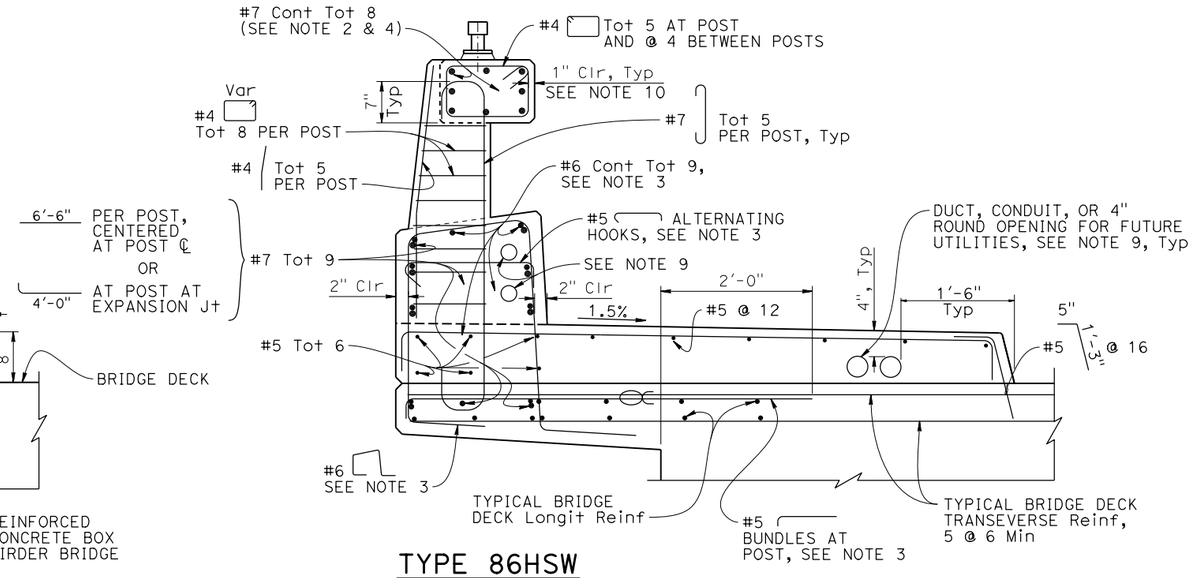

TYPE 86HSW
1" = 1'-0"

NOTE: Balusters not shown for clarity.

Dist	COUNTY	ROUTE	POST MILES TOTAL PROJECT	SHEET No.	TOTAL SHEETS

REGISTERED CIVIL ENGINEER X DATE

PLANS APPROVAL DATE

REGISTERED PROFESSIONAL ENGINEER X No. X Exp. X CIVIL STATE OF CALIFORNIA

THE STATE OF CALIFORNIA OR ITS OFFICERS OR AGENTS SHALL NOT BE RESPONSIBLE FOR THE ACCURACY OR COMPLETENESS OF SCANNED COPIES OF THIS PLAN SHEET.

THE REGISTERED CIVIL ENGINEER FOR THE PROJECT IS RESPONSIBLE FOR THE SELECTION AND PROPER APPLICATION OF THE COMPONENT DESIGN AND ANY MODIFICATIONS SHOWN.

NOTES:

1. This barrier is to be used only for posted speeds of 45 MPH or less.
2. If departure end block is within the Clear Recovery Zone (CRZ) of opposing traffic (30 feet minimum desirable for expressways and freeways, and 20 feet minimum desirable for conventional highways), use the Approach End Block Transition detail for the departure end. Exact CRZ width must be determined by the Engineer.
3. For additional reinforcement details, see "CONCRETE BARRIER TYPE 86HSW DETAILS No. 3" sheet.
4. Barrier joint to match deck joint, 1" Minimum.
5. Butt welds are acceptable alternative splice to lap splicing #7 bars. No portion of a lap splice can encroach on the post location.
6. For "SECTION A-A" & "SECTION B-B", see "CONCRETE BARRIER TYPE 86HSW DETAILS No. 4" sheet. For "SECTION C-C", "SECTION D-D" & "SECTION E-E", see "CONCRETE BARRIER TYPE 86HSW DETAILS No. 2" sheet. For "SECTION F-F", see "CONCRETE BARRIER TYPE 86HSW DETAILS No. 6" sheet.
7. Post spacing on wingwalls may vary, 10'-0" maximum, 5'-0" minimum post spacing between post centerlines.
8. A minimum of two 4" round openings for future utilities and a maximum of six 4" round openings for a 6'-2" sidewalk. One 4" round opening can be added for each additional 1'-0" of sidewalk width. Utility opening must be a minimum of 6" from face of barrier parapet. Openings are to be sealed at ends and extended 8" minimum past end of sidewalk if not used. Duct forms are to be tied down. For exact number and placement of utility openings see other details. Minimum 2" clear between round openings, ducts, or conduits.
9. The maximum number of conduits is limited to two 1½"Ø and must be placed in front half of the lower beam curb. See also "CONDUIT IN BRIDGE RAILING" detail on Standard Plan B14-3.
10. 1" clearance to reinforcement on all concrete barrier surfaces of the upper beam, top of lower beam (curb), and all surfaces of concrete posts.
11. See Project Plans for Joint Armor for Pedestrian Walkways details.
12. Tubular handrailing is optional.

LEGEND:

Bundled Reinforcement

BRIDGE STANDARD DETAILS

xs16-128-1	JANUARY 2026	*The components of the Bridge Standard Details have been prepared under the responsible charge of the Technical Owner, a registered civil engineer in the State of California*
FILE NO.	APPROVAL DATE	

STATE OF CALIFORNIA DEPARTMENT OF TRANSPORTATION

DIVISION OF ENGINEERING SERVICES

BRIDGE No. XX-XXXX

POST MILE X.X

X

CONCRETE BARRIER TYPE 86HSW DETAILS No. 1

Refer to: http://www.dot.ca.gov/hq/esc/techpubs/manual/bridgemanuals/bridge-standard-detail-sheets/index.html

DATE PLOTTED => 8-JAN-2026 TIME PLOTTED => 15:22
FILE => 202601_xs16-128-1.dgn USERNAME => s155182

ORIGINAL SCALE IN INCHES FOR REDUCED PLANS 0 1 2 3

UNIT: XXXX
PROJECT NUMBER & PHASE: XXXXXXXXXX1
COUNTY/ROUTE/ZONE: XXX/XXX/X
CONTRACT No.: XX-XXXXX4

DISREGARD PRINTS BEARING EARLIER REVISION DATES

REVISION DATES | SHEET X | OF X