Dist	COUNTY	ROUTE	POST MILES TOTAL PROJECT	SHEET No.	TOTAL SHEETS
DDDD	CCCC	RRRR	PPPP	????	####

REGISTERED CIVIL ENGINEER X DATE

MM/DD/YYYY
PLANS APPROVAL DATE

REGISTERED PROFESSIONAL ENGINEER No. X Exp. X CIVIL STATE OF CALIFORNIA

THE STATE OF CALIFORNIA OR ITS OFFICERS OR AGENTS SHALL NOT BE RESPONSIBLE FOR THE ACCURACY OR COMPLETENESS OF SCANNED COPIES OF THIS PLAN SHEET.

THE REGISTERED CIVIL ENGINEER FOR THE PROJECT IS RESPONSIBLE FOR THE SELECTION AND PROPER APPLICATION OF THE COMPONENT DESIGN AND ANY MODIFICATIONS SHOWN.

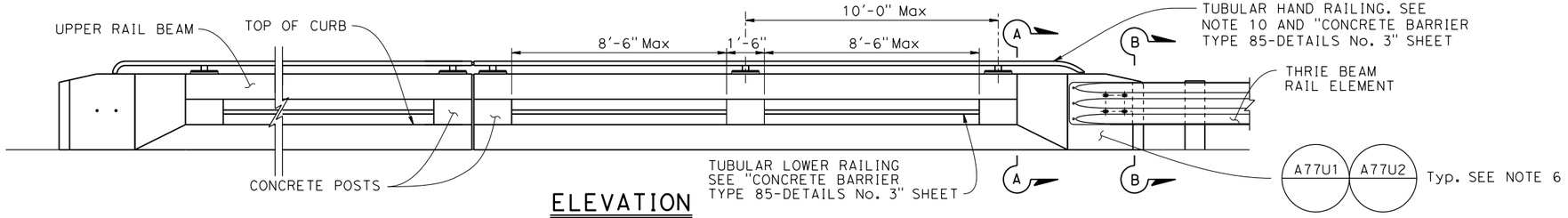

ELEVATION
3/8" = 1'-0"

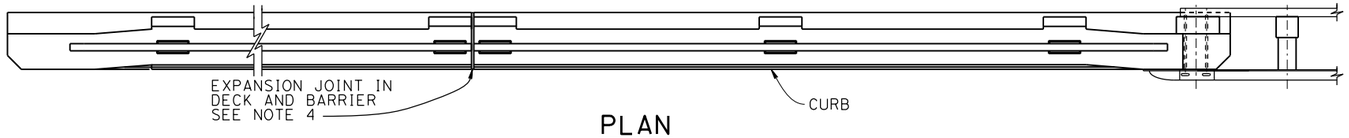

PLAN
3/8" = 1'-0"

* BEGIN BARRIER TRANSITION
** END BARRIER TRANSITION

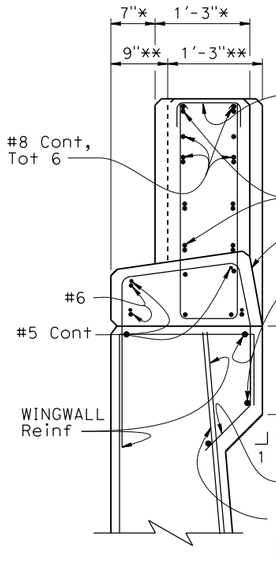

SECTION A-A

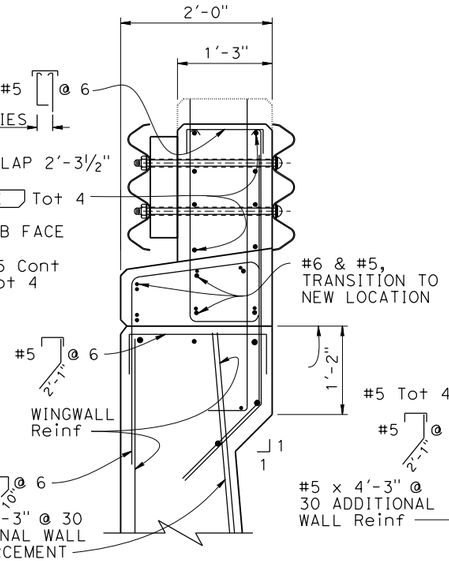

SECTION B-B

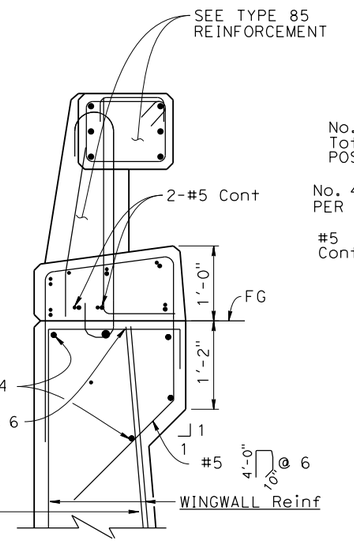

TYPE 85A

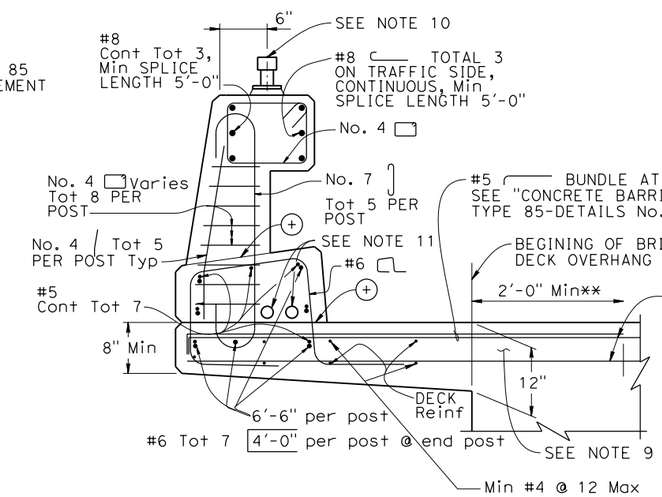

TYPE 85

(+) CONSTRUCTION JOINT

** #5 BUNDLE AT POST TO EXTEND 2'-0" BEYOND BRIDGE DECK OVERHANG

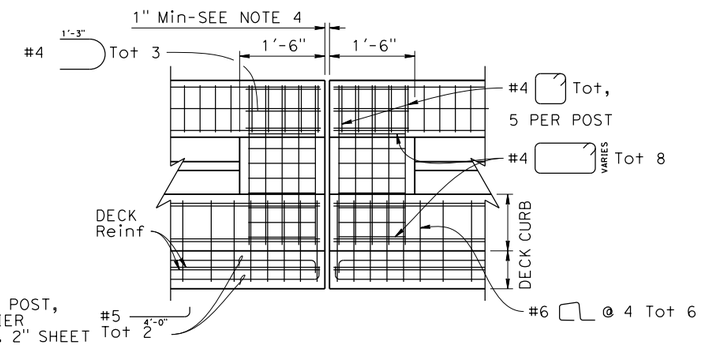

EXPANSION JOINT DETAIL
1" = 1'-0"

NOTES:

1. Walls are to be backfilled before the barrier is placed.
2. Longitudinal reinforcing steel to stop at all expansion joints.
3. The front face dimensions are to be constant above the finish roadway profile, but the overall height will vary with certain thicknesses of surfacing and roadway slopes.
4. Expansion joint to match deck joint.
5. Splicing in longitudinal rail reinforcing must be staggered.
6. For typical metal railing connection details not shown, see Standard Plans A77U1 and A77U2.
7. Chain link railing is not allowed on Type 85 Barriers.
8. Posts to be spaced equally, typically 10'-0" spacing. Post spacing may be reduced where location of expansion joints or the length of wingwalls will not accommodate the 10'-0" spacing. Maximum see-through availability is to be strived for, where 10'-0" post spacing can not be achieved.
9. For additional reinforcement details, see "CONCRETE BARRIER TYPE 85-DETAILS No. 2" sheet.
10. Tubular railing is optional refer to General Plan and Typical Section in Structural Plans.
11. The maximum number of conduits is limited to two 1 1/2" Φ and must be placed in front half of the lower beam/curb.

STANDARD PLAN SHEET No.
DETAIL No.

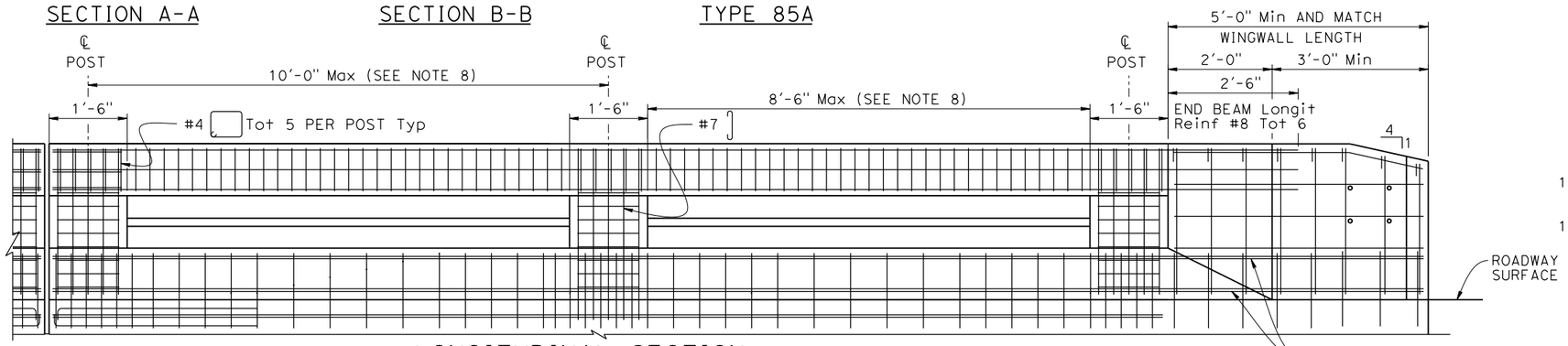

LONGITUDINAL SECTION
(Deck or wingwall reinforcing not shown)

NOTE: For Reinf SHOWN AND NOTE NOTED SEE OTHER DETAILS.

BRIDGE STANDARD DETAILS

xs16-117-1	July 2020	*The components of the Bridge Standard Details have been prepared under the responsible charge of the Technical Owner, a registered civil engineer in the State of California*
FILE NO.	APPROVAL DATE	

STATE OF CALIFORNIA DEPARTMENT OF TRANSPORTATION

DIVISION OF ENGINEERING SERVICES

BRIDGE No. X
POST MILE X

X

CONCRETE BARRIER TYPE 85
DETAILS No. 1

Refer to: http://www.dot.ca.gov/hq/esc/techpubs/manual/bridgemanuals/bridge-standard-detail-sheets/index.html

DATE PLOTTED => 7/17/2020 TIME PLOTTED => 1:38:42 PM
FILE => ...\16\xs16-117-1.dgn USERNAME => "s136236"

ORIGINAL SCALE IN INCHES FOR REDUCED PLANS 0 1 2 3

UNIT: X
PROJECT NUMBER & PHASE: X
CONTRACT No.: X

DISREGARD PRINTS BEARING EARLIER REVISION DATES

REVISION DATES: 4-13-20 7-14-20 7-15-20

SHEET 1 OF 3