Dist	COUNTY	ROUTE	POST MILES TOTAL PROJECT	SHEET No.	TOTAL SHEETS
DDDD	CCCC	RRRR	PPPP	????	####

REGISTERED CIVIL ENGINEER X DATE

MM/DD/YYYY
PLANS APPROVAL DATE

REGISTERED PROFESSIONAL ENGINEER No. X Exp. X CIVIL STATE OF CALIFORNIA

THE STATE OF CALIFORNIA OR ITS OFFICERS OR AGENTS SHALL NOT BE RESPONSIBLE FOR THE ACCURACY OR COMPLETENESS OF SCANNED COPIES OF THIS PLAN SHEET.

THE REGISTERED CIVIL ENGINEER FOR THE PROJECT IS RESPONSIBLE FOR THE SELECTION AND PROPER APPLICATION OF THE COMPONENT DESIGN AND ANY MODIFICATIONS SHOWN.

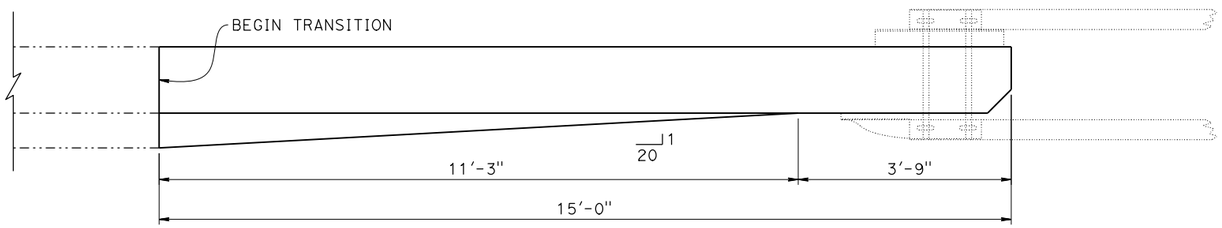

PLAN

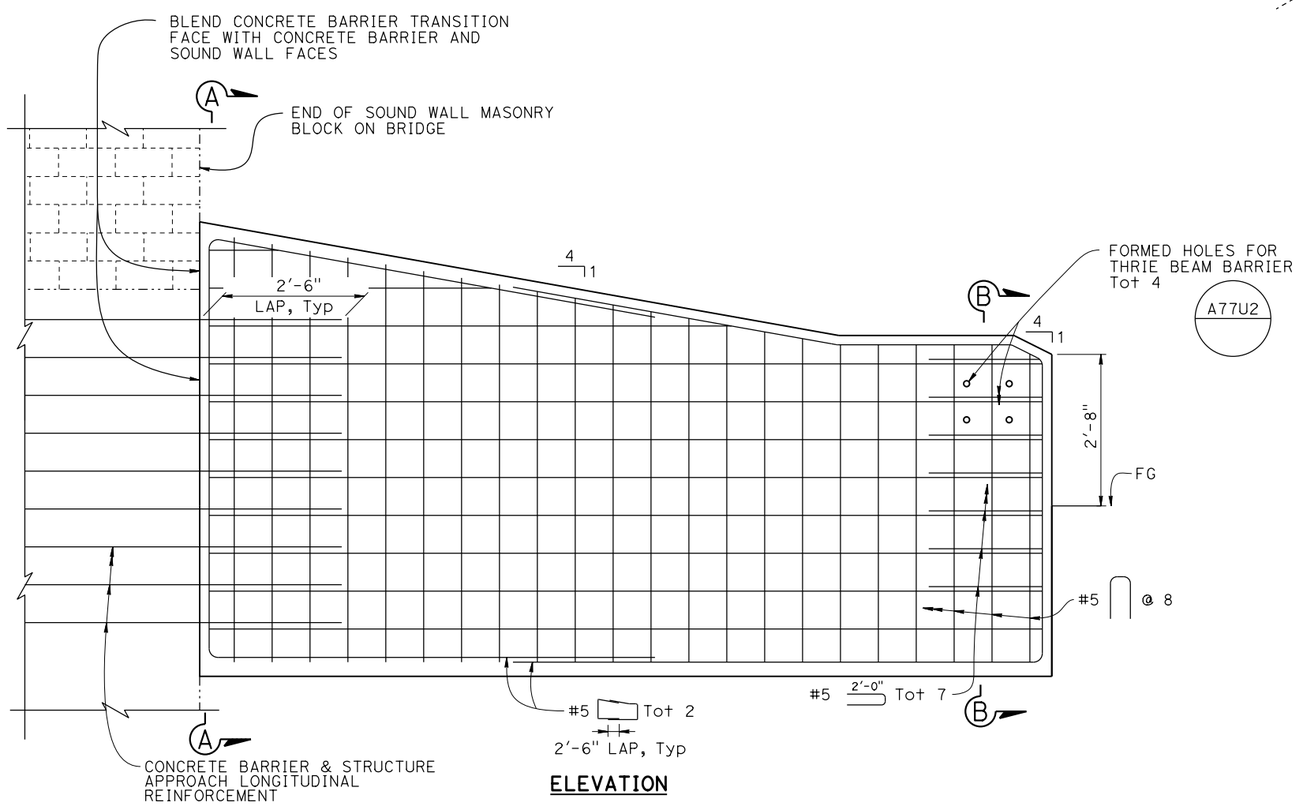

ELEVATION

CONCRETE BARRIER TRANSITION

NO SCALE

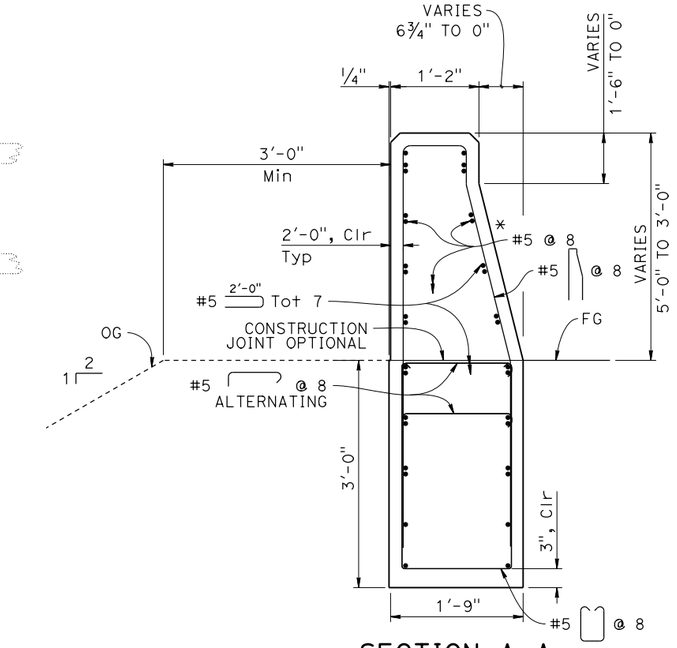

SECTION A-A

NO SCALE

* Transition sloping face to vertical face

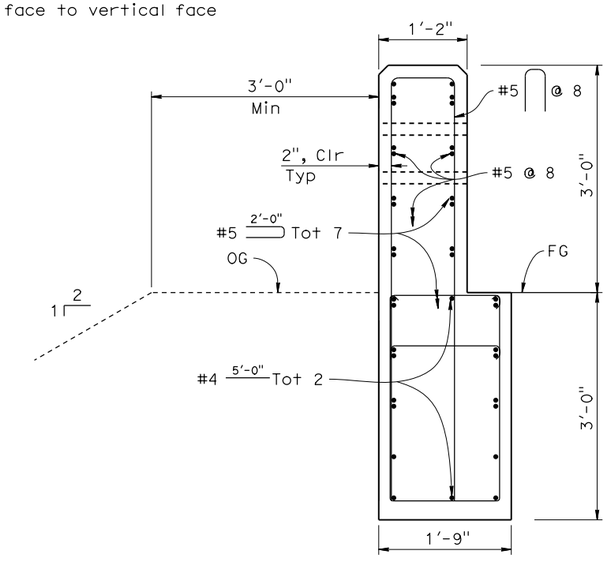

SECTION B-B

NO SCALE

BRIDGE STANDARD DETAILS		
xs15-140-3	April 2020	*The components of the Bridge Standard Details have been prepared under the responsible charge of the Technical Owner, a registered civil engineer in the State of California*
FILE NO.	APPROVAL DATE	

STATE OF **CALIFORNIA** DEPARTMENT OF TRANSPORTATION

DIVISION OF ENGINEERING SERVICES

BRIDGE No.

POST MILE

SOUND WALL MASONRY BLOCK ON BRIDGE

DETAILS No.3

Refer to: http://www.dot.ca.gov/hq/esc/techpubs/manual/bridgemanuals/bridge-standard-detail-sheets/index.html

DATE PLOTTED => 14-APR-2020 TIME PLOTTED => 14:41
FILE => xs15-140-3.dgn USERNAME => s136236

ORIGINAL SCALE IN INCHES FOR REDUCED PLANS 0 1 2 3

UNIT:
PROJECT NUMBER & PHASE: CONTRACT No.:

DISREGARD PRINTS BEARING EARLIER REVISION DATES

REVISION DATES: 02/27/20 03/10/20 03/26/20 4-14-20

SHEET 3 OF 3