Dist	COUNTY	ROUTE	POST MILES TOTAL PROJECT	SHEET No.	TOTAL SHEETS

REGISTERED CIVIL ENGINEER X DATE

PLANS APPROVAL DATE

REGISTERED PROFESSIONAL ENGINEER X No. X Exp. X CIVIL STATE OF CALIFORNIA

THE STATE OF CALIFORNIA OR ITS OFFICERS OR AGENTS SHALL NOT BE RESPONSIBLE FOR THE ACCURACY OR COMPLETENESS OF SCANNED COPIES OF THIS PLAN SHEET.

THE REGISTERED CIVIL ENGINEER FOR THE PROJECT IS RESPONSIBLE FOR THE SELECTION AND PROPER APPLICATION OF THE COMPONENT DESIGN AND ANY MODIFICATIONS SHOWN.

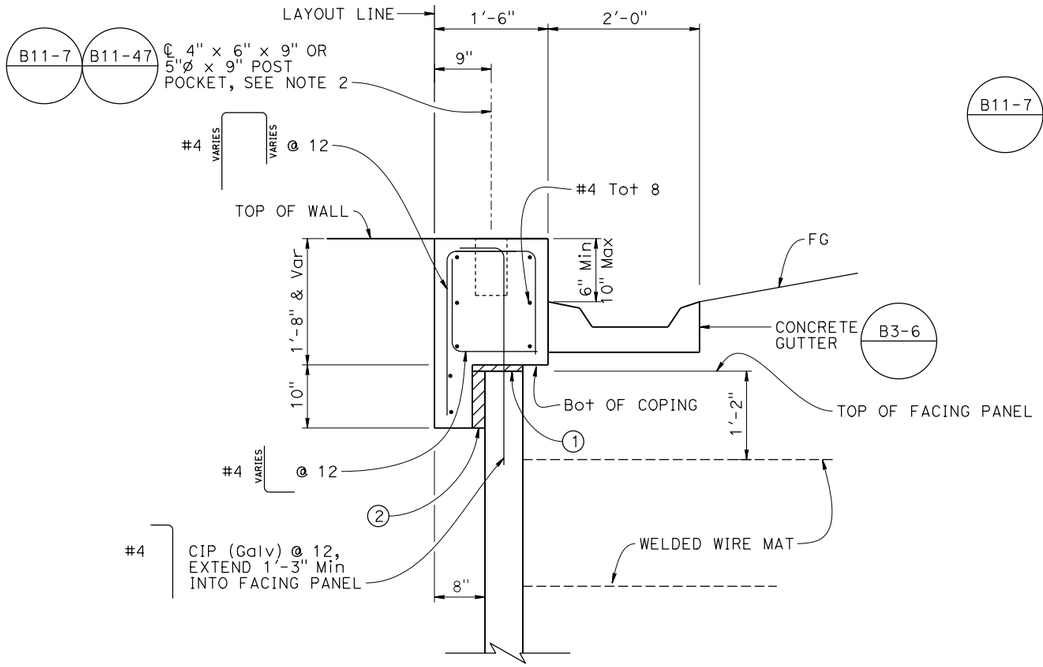

SECTION A-A

1" = 1'-0"

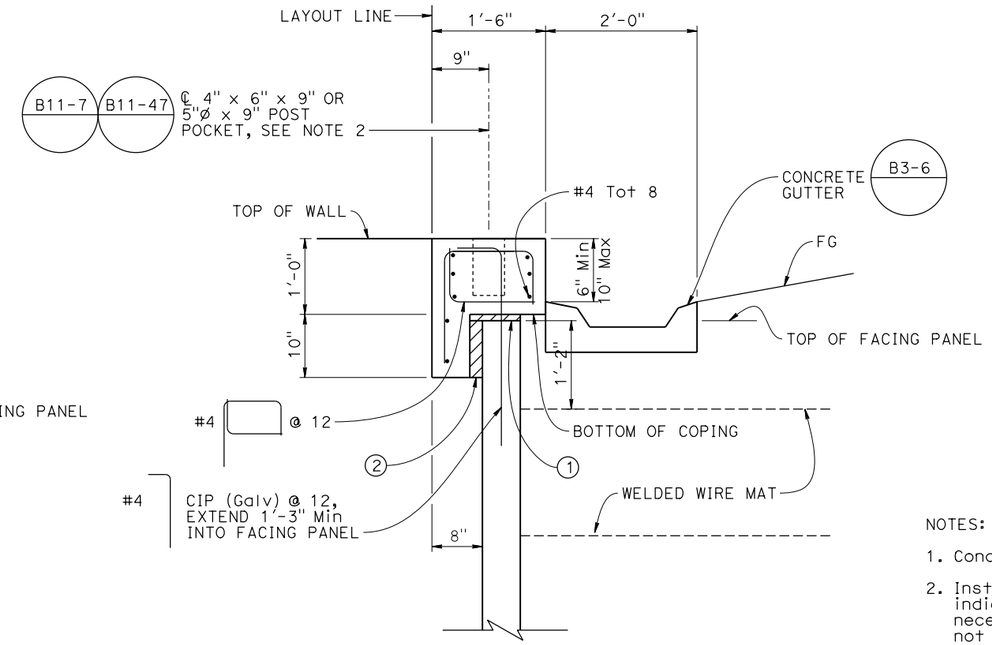

STANDARD COPING DETAIL

1" = 1'-0"

NOTES:

1. Concrete Gutter optional as needed.
2. Install Cable Railing or Chain Link Railing when indicated. Adjust Coping reinforcement as necessary around Post Pocket reinforcement, not shown for clarity.

(1) 1" Expanded Polystyrene

(2) 2" Expanded Polystyrene

LEGEND:

Expanded Polystyrene

Expansion Joint Filler

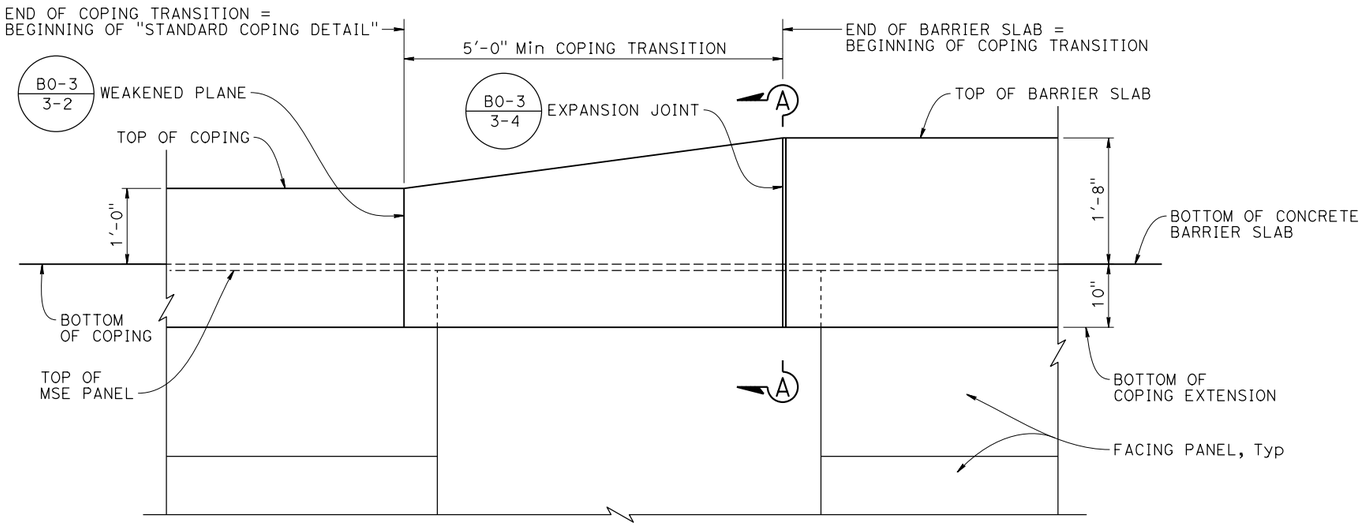

TRANSITION FROM COPING TO BARRIER SLAB

1" = 1'-0"

NOTE: Barrier not shown.

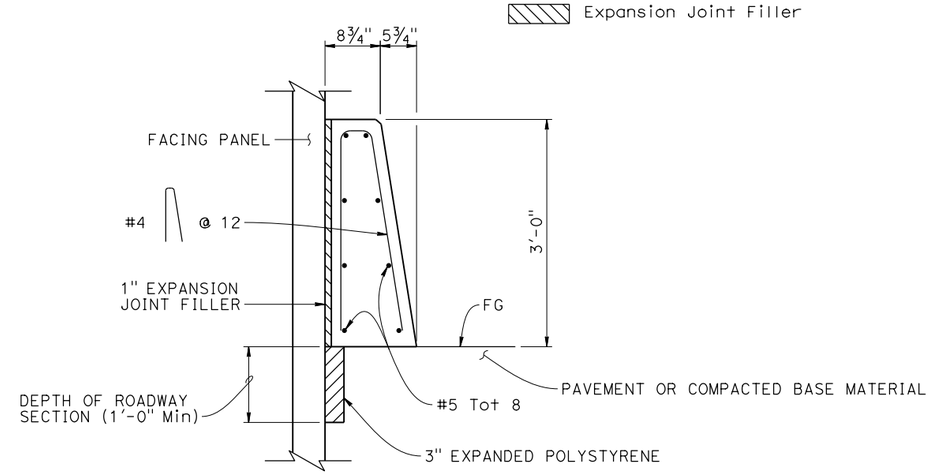

CONCRETE BARRIER (TYPE 60D Mod)

1" = 1'-0"

BRIDGE STANDARD DETAILS		
xs13-020-4	April 2024	*The components of the Bridge Standard Details have been prepared under the responsible charge of the Technical Owner, a registered civil engineer in the State of California*
FILE No.	APPROVAL DATE	

STATE OF CALIFORNIA DEPARTMENT OF TRANSPORTATION

DIVISION OF ENGINEERING SERVICES

BRIDGE No. XX-XXXX

POST MILE X.X

X

MECHANICALLY STABILIZED EMBANKMENT DETAILS No. 4

Refer to: http://www.dot.ca.gov/hq/esc/techpubs/manual/bridgemanuals/bridge-standard-detail-sheets/index.html

DATE PLOTTED => 23-APR-2024 TIME PLOTTED => 23:18
FILE => 202404-xs13-020-4_clipped.dgn USERNAME => s120745

ORIGINAL SCALE IN INCHES FOR REDUCED PLANS 0 1 2 3

UNIT: XXXX
PROJECT NUMBER & PHASE: XXXXXXXXXX1

COUNTY/ROUTE/ZONE: XXX/XXX/X
CONTRACT No.: XX-XXXXX4

DISREGARD PRINTS BEARING EARLIER REVISION DATES

REVISION DATES

SHEET X OF X