Dist	COUNTY	ROUTE	POST MILES TOTAL PROJECT	SHEET No.	TOTAL SHEETS
03	Pla	65	R11.9/R24.1		

REGISTERED CIVIL ENGINEER DATE

PLANS APPROVAL DATE

REGISTERED PROFESSIONAL ENGINEER No. Exp. CIVIL STATE OF CALIFORNIA

THE STATE OF CALIFORNIA OR ITS OFFICERS OR AGENTS SHALL NOT BE RESPONSIBLE FOR THE ACCURACY OR COMPLETENESS OF SCANNED COPIES OF THIS PLAN SHEET.

NOTES:

1. LL = LANELINE
2. h = DISTANCE FROM BOTTOM OF FRAME TO BOTTOM OF BASE PLATE.
3. OVERHEAD SIGN PANELS SHALL BE LAMINATED PANELS TYPE A.

This detail sheet shows the height of the overhead sign, length of the truss, type of post, type of pile foundations and where the overhead sign is positioned over the traveled way.

Quantities for CIDH pile foundation concrete and truss steel are quantified on Example "65-SQ-6."

Dimensions of the sign panel or the dimensioning for the letters and spacing should only be shown once. This would help avoid possible discrepancies and confusion.

This Sign Details sheet (example "65 SD-2") shows the elevation views of the overhead signs with respect to the traveled way. For the panel information of these overhead signs (see example "65 SD-1").

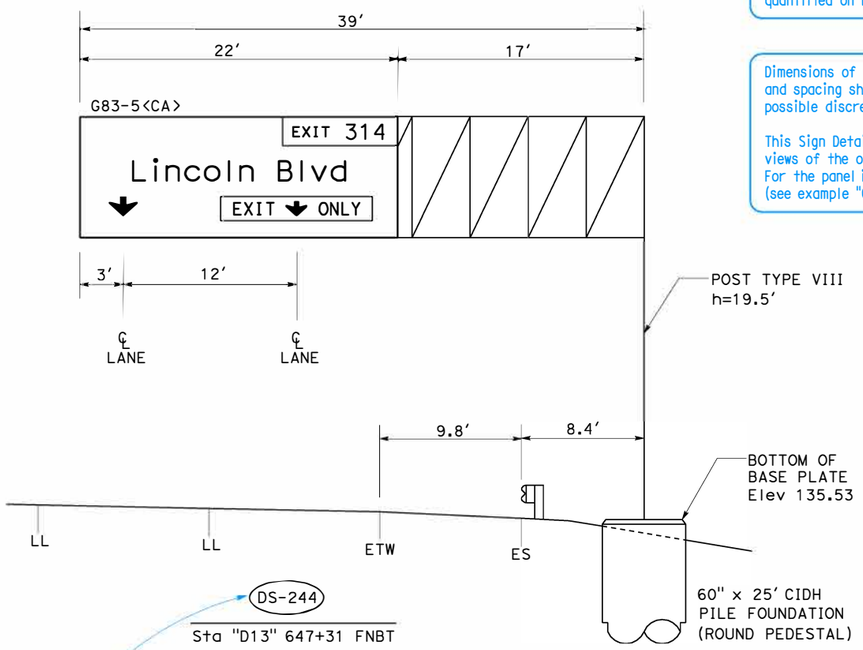

DS-244

Sta "D13" 647+31 FNBT

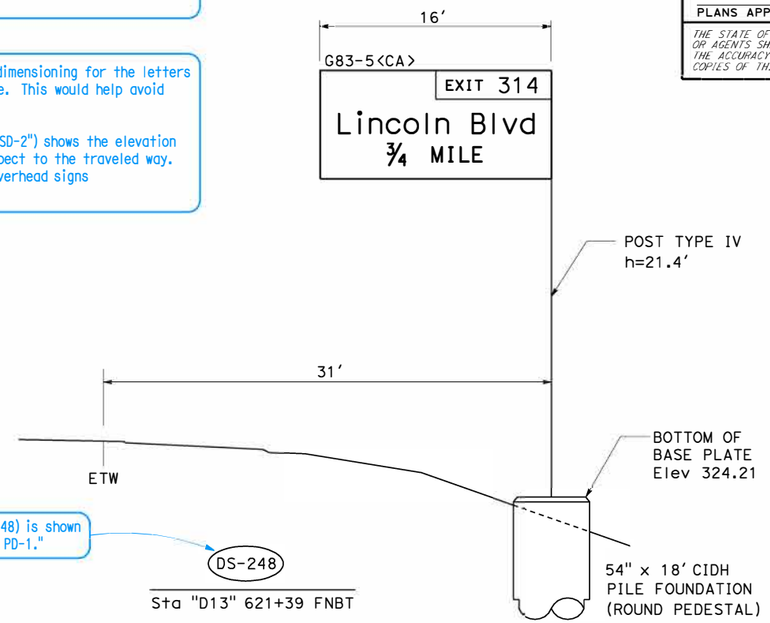

This sign (DS-248) is shown on Example "65 PD-1."

DS-248

Sta "D13" 621+39 FNBT

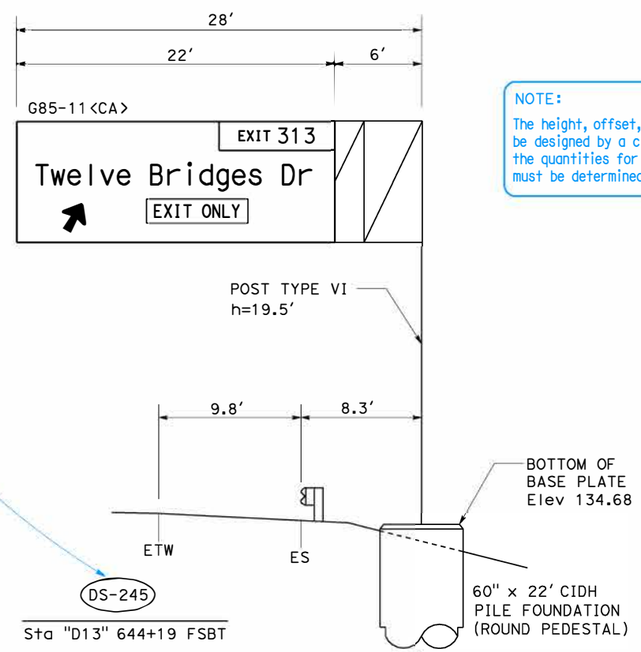

These two signs (DS-244 and DS-245) are shown on Example "65 PD-3."

DS-245

Sta "D13" 644+19 FSBT

NOTE:

The height, offset, and positioning of the overhead sign must be designed by a civil engineer, not an electrical engineer. Also, the quantities for CIDH pile foundation concrete and truss steel must be determined by a civil engineer, not an electrical engineer.

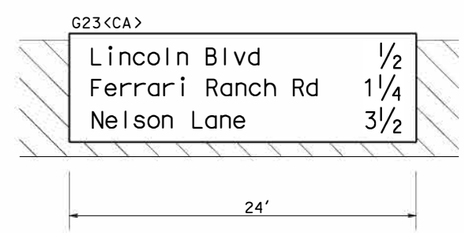

This sign (DS-249) is shown on Example "65 PD-2."

DS-249

BRIDGE MOUNTED SIGN (FNBT)
"D13" 629+03

TWELVE BRIDGES DRIVE OC (Exist)
Br No. 19-0173

(SEE SHEETS SDS-1 THROUGH SDS-3 FOR MOUNTING DETAILS)

See examples "65 SDS-1," "65 SDS-2," and "65 SDS-3."

THIS EXAMPLE IS ONE OF MANY EXAMPLES OF THE VARIOUS TYPES OF PROJECT PLAN SHEETS FROM THE SAME CONSTRUCTION PROJECT, "ROUTE 65 BYPASS PROJECT."

SIGN DETAILS SHEET, EXAMPLE "65 SD-2"

SIGN DETAILS

NO SCALE

SD-2

SIGN DETAILS SHEET, EXAMPLE "65 SD-2" RELEASED 7/7/2011

LAST REVISION 00-00-00 | DATE PLOTTED => 06-JUL-2011 | TIME PLOTTED => 13:09

STATE OF CALIFORNIA - DEPARTMENT OF TRANSPORTATION

Caltrans

FUNCTIONAL SUPERVISOR | CALCULATED-DESIGNED BY | CHECKED BY | REVISED BY | DATE REVISED