SUPERSEDES EXAMPLE RELEASED 10/30/09

Dist	COUNTY	ROUTE	POST MILES TOTAL PROJECT	SHEET No.	TOTAL SHEETS
03	Pla	65	R11.9/R24.1		

REGISTERED CIVIL ENGINEER DATE

PLANS APPROVAL DATE

REGISTERED PROFESSIONAL ENGINEER No. Exp. CIVIL STATE OF CALIFORNIA

THE STATE OF CALIFORNIA OR ITS OFFICERS OR AGENTS SHALL NOT BE RESPONSIBLE FOR THE ACCURACY OR COMPLETENESS OF SCANNED COPIES OF THIS PLAN SHEET.

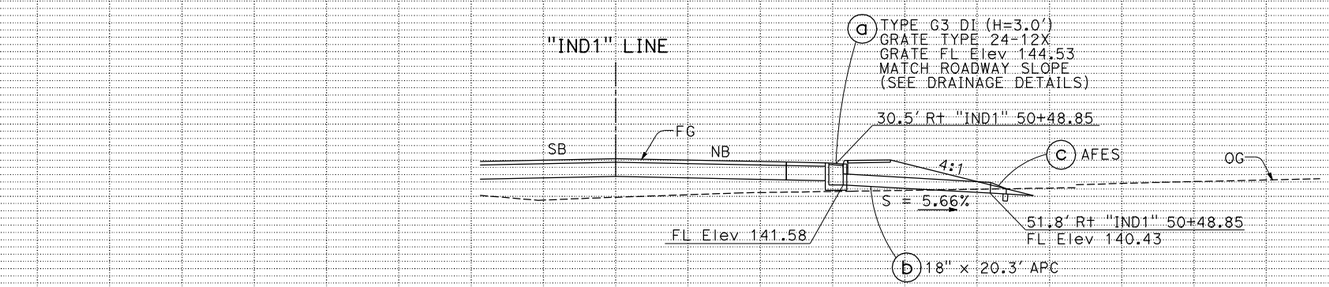

DRAINAGE SYSTEM No. 11

"IND1" 50+48.85

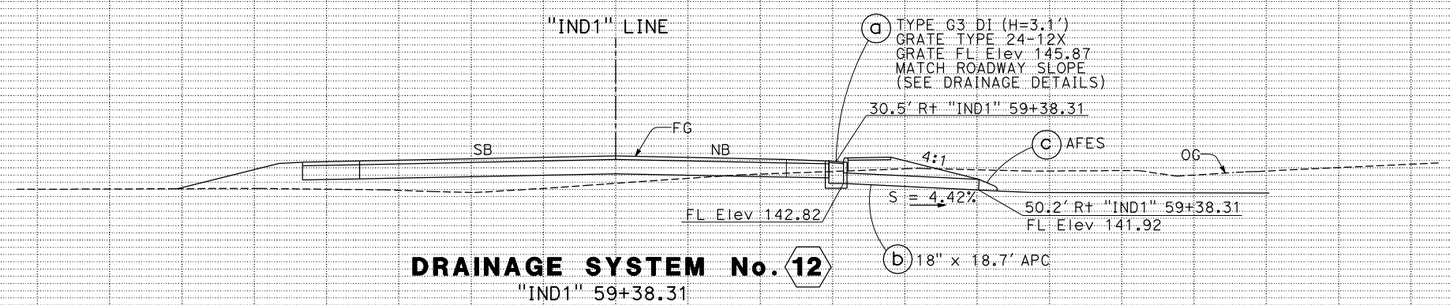

DRAINAGE SYSTEM No. 12

"IND1" 59+38.31

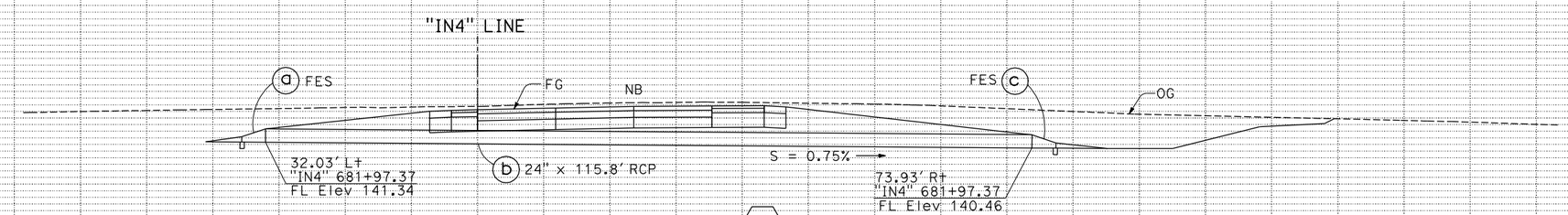

DRAINAGE SYSTEM No. 13

"IN4" 681+97.37 NB OFF-RAMP

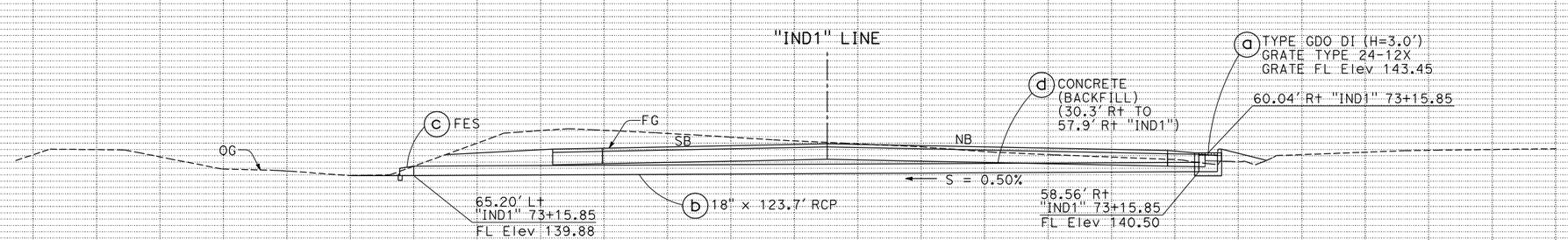

DRAINAGE SYSTEM No. 15

"IND1" 73+15.85

THIS EXAMPLE IS ONE OF MANY EXAMPLES OF THE VARIOUS TYPES OF PROJECT PLAN SHEETS FROM THE SAME CONSTRUCTION PROJECT, "ROUTE 65 BYPASS PROJECT."

DRAINAGE PROFILES SHEET, EXAMPLE "65 DP-3"

DRAINAGE PROFILES

SCALE: Horiz 1" = 10'
Vert 1" = 10'

DP-3

DRAINAGE PROFILES SHEET, EXAMPLE "65 DP-3" RELEASED 1/6/2012

LAST REVISION 00-00-00 DATE PLOTTED => 29-DEC-2011 TIME PLOTTED => 10:26

REVISED BY | DATE REVISED

CALCULATED-DESIGNED BY | CHECKED BY

FUNCTIONAL SUPERVISOR

STATE OF CALIFORNIA - DEPARTMENT OF TRANSPORTATION

Caltrans