STANDARD PLANS

STATE OF CALIFORNIA
CALIFORNIA STATE TRANSPORTATION AGENCY
DEPARTMENT OF TRANSPORTATION

2026 Edition

PUBLISHED BY
DEPARTMENT OF TRANSPORTATION

© Copyright 2026 California Department of Transportation. All rights reserved.

PREFACE

This 2026 edition of the California Department of Transportation Standard Plans is based on U.S. Customary units. This is the Department's ninth edition Standard Plans since the Department reverted back to U.S. Customary units as its base units. U.S. Customary units ("inch-pound") are defined by the National Institute of Standards and Technology (NIST). The previous edition of the Department's Standard Plans published in U.S. Customary units was the 2025 edition.

This 2026 edition of the Department's Standard Plans is to be used in conjunction with the 2026 edition of the Department's Standard Specifications.

TABLE OF CONTENTS

PLAN TITLE	PLAN No.	PAGE
ABBREVIATIONS, LINES, SYMBOLS, AND LEGEND		
ABBREVIATIONS (SHEET 1 OF 3)	A3A	1
ABBREVIATIONS (SHEET 2 OF 3)	A3B	2
ABBREVIATIONS (SHEET 3 OF 3)	A3C	3
LEGEND - LINES AND SYMBOLS (SHEET 1 OF 5)	A10A	4
LEGEND - LINES AND SYMBOLS (SHEET 2 OF 5)	A10B	5
LEGEND - LINES AND SYMBOLS (SHEET 3 OF 5)	A10C	6
LEGEND - LINES AND SYMBOLS (SHEET 4 OF 5)	A10D	7
LEGEND - LINES AND SYMBOLS (SHEET 5 OF 5)	A10E	8
LEGEND - SOIL (SHEET 1 OF 2)	A10F	9
LEGEND - SOIL (SHEET 2 OF 2)	A10G	10
LEGEND - ROCK	A10H	11
MONITORING WELLS		
MONITORING WELL	A15A	12
MONITORING WELL - INCLINOMETER	A15B	13
PAVEMENT MARKERS, TRAFFIC LINES, AND PAVEMENT MARKINGS		
PAVEMENT MARKERS AND TRAFFIC LINES - TYPICAL DETAILS	A20A	14
PAVEMENT MARKERS AND TRAFFIC LINES - TYPICAL DETAILS	A20B	15
PAVEMENT MARKERS AND TRAFFIC LINES - TYPICAL DETAILS	A20C	16
PAVEMENT MARKERS AND TRAFFIC LINES - TYPICAL DETAILS	A20D	17
TRAFFIC LINES - TYPICAL DETAILS FOR CONTRAST STRIPING	A20E	18
PAVEMENT MARKERS AND TRAFFIC LINES - TYPICAL DETAILS	A20F	19
EXIT RAMP WITH ENHANCED PAVEMENT MARKERS FOR WRONG WAY DETAILS	A20G	20
PAVEMENT MARKINGS - ARROWS	A24A	21
PAVEMENT MARKINGS - ARROWS AND SYMBOLS	A24B	22
PAVEMENT MARKINGS - SYMBOLS AND NUMERALS	A24C	23
PAVEMENT MARKINGS - WORDS	A24D	24
PAVEMENT MARKINGS - WORDS	A24E	25
PAVEMENT MARKINGS - CROSSWALKS	A24F	26
PAVEMENT MARKINGS - YIELD LINES, LIMIT LINES, AND WRONG WAY DETAILS	A24G	27
PAVEMENT MARKINGS - ARROWS	A24H	28
PAVEMENT MARKINGS - SPEED MEASUREMENT	A24J	29
PAVEMENT MARKINGS - BICYCLE OBSTRUCTION MARKINGS	A24K	30
PAVEMENT MARKINGS - SPEED REDUCTION	A24L	31
RUMBLE STRIP		
SHOULDER RUMBLE STRIP DETAILS - GROUND-IN INDENTATIONS	A40B	32
EDGE LINE RUMBLE STRIP DETAILS - GROUND-IN INDENTATIONS	A40C	33
CENTERLINE RUMBLE STRIP DETAILS - GROUND-IN INDENTATIONS	A40D	34
RUMBLE STRIP PLACEMENT AT FREEWAY EXIT RAMPS, FREEWAY ENTRANCE RAMPS, AND INTERSECTIONS	A40E	35
RUMBLE STRIP PLACEMENT AT INTERSECTIONS WITH LEFT TURN POCKETS, RAILROAD CROSSINGS, PRIVATE ROADS, AND MAJOR DRIVEWAYS	A40F	36

PLAN TITLE	PLAN No.	PAGE
RUMBLE STRIP (CONTINUED)		
SINUSOIDAL RUMBLE STRIP DETAILS - GROUND-IN INDENTATIONS	A40G	37
RUMBLE STRIP PLACEMENT WITH GAPS FOR BICYCLES	A40H	38
COMBINED RECESSED TRAFFIC STRIPE AND RUMBLE STRIP DETAILS	A40J	39
RUMBLE STRIP PLACEMENT FOR PAVED MEDIANS	A40K	40
RUMBLE STRIP PLACEMENT FOR CLASS 2 BICYCLE LANE AND CLASS 4 BIKEWAY	A40L	41
EXCAVATION AND BACKFILL		
EXCAVATION AND BACKFILL - MISCELLANEOUS DETAILS	A62A	42
LIMITS OF PAYMENT FOR EXCAVATION AND BACKFILL - BRIDGE SURCHARGE AND WALL	A62B	43
LIMITS OF PAYMENT FOR EXCAVATION AND BACKFILL - BRIDGE	A62C	44
EXCAVATION AND BACKFILL - CONCRETE PIPE CULVERTS	A62D	45
EXCAVATION AND BACKFILL - CONCRETE PIPE CULVERTS INDIRECT DESIGN METHOD	A62DA	46
EXCAVATION AND BACKFILL - CAST-IN-PLACE REINFORCED CONCRETE BOX AND ARCH CULVERTS	A62E	47
EXCAVATION AND BACKFILL - METAL AND PLASTIC CULVERTS	A62F	48
EXCAVATION AND BACKFILL - PRECAST REINFORCED CONCRETE BOX CULVERT	A62G	49
PORTABLE CONCRETE BARRIER		
PORTABLE CONCRETE BARRIER (TYPE 60K)	A63A	50
PORTABLE CONCRETE BARRIER (TYPE 60K)	A63B	51
OBJECT MARKERS, DELINEATORS, CHANNELIZERS, AND BARRICADES		
OBJECT MARKERS	A73A	52
MARKERS	A73B	53
DELINEATORS, CHANNELIZERS, AND BARRICADES	A73C	54
SURVEYS		
SURVEY MONUMENTS	A74	55
GLOBAL NAVIGATION SATELLITE SYSTEM STATION DETAILS	A74A	56
CONCRETE BARRIER TYPE 60 SERIES		
CONCRETE BARRIER TYPE 60M	A76A	57
CONCRETE BARRIER TYPE 60M DETAILS	A76AB	58
CONCRETE BARRIER TYPE 60M TRANSITION TO CONCRETE BARRIER TYPE 50	A76AC	59
CONCRETE BARRIER TYPE 60MP	A76BA	60
CONCRETE BARRIER TYPE 60PR	A76BB	61
CONCRETE BARRIER TYPE 60AP	A76BC	62
CONCRETE BARRIER TYPE 60M WITH SMALL POLE	A76BM	63
CONCRETE BARRIER TYPE 60MS WITH SMALL POLE	A76BN	64
CONCRETE BARRIER TYPES 60M AND 60MS WITH SMALL POLE TRANSITION DETAILS	A76BO	65
CONCRETE BARRIER TYPE 60MC WITH SMALL POLE	A76BP	66
CONCRETE BARRIER TYPE 60MSC WITH SMALL POLE	A76BQ	67

PLAN TITLE	PLAN No.	PAGE
CONCRETE BARRIER TYPE 60 SERIES (CONTINUED)		
CONCRETE BARRIER TYPES 60MC AND 60MSC WITH SMALL POLE TRANSITION DETAILS	A76BR	68
CONCRETE BARRIER TYPE 60MF	A76C	69
CONCRETE BARRIER TYPE 60MG	A76D	70
CONCRETE BARRIER TYPE 60MG	A76E	71
CONCRETE BARRIER TYPE 60MGF	A76F	72
CONCRETE BARRIER TYPE 60MS	A76G	73
CONCRETE BARRIER TYPE 60MS CONNECTION TO CRASH CUSHION	A76HA	74
CONCRETE BARRIER TYPE 60MS TO TRANSITION RAILING (TYPE AGT)	A76HB	75
CONCRETE BARRIER TYPE 60MSF	A76I	76
CONCRETE BARRIER WILDLIFE PASSAGEWAY		
CONCRETE BARRIER - WILDLIFE PASSAGEWAY (TYPE MS)	A76J	77
CONCRETE BARRIER - WILDLIFE PASSAGEWAY (TYPE MM)	A76K	78
CONCRETE BARRIER - WILDLIFE PASSAGEWAY (TYPE ML)	A76L	79
MIDWEST GUARDRAIL SYSTEM - STANDARD RAILING SECTIONS AND TRANSITION TO METAL BEAM GUARDRAIL		
MIDWEST GUARDRAIL SYSTEM - STANDARD RAILING SECTION (WOOD POST WITH WOOD BLOCK)	A77L1	80
MIDWEST GUARDRAIL SYSTEM - STANDARD RAILING SECTION (STEEL POST WITH NOTCHED WOOD OR NOTCHED RECYCLED PLASTIC BLOCK)	A77L2	81
MIDWEST GUARDRAIL SYSTEM - TRANSITION TO METAL BEAM GUARDRAIL	A77L4	82
MIDWEST GUARDRAIL SYSTEM - STANDARD HARDWARE	A77M1	83
MIDWEST GUARDRAIL SYSTEM - WOOD POST AND WOOD BLOCK DETAILS	A77N1	84
MIDWEST GUARDRAIL SYSTEM - STEEL POST AND BLOCK DETAILS	A77N2	85
MIDWEST GUARDRAIL SYSTEM - TYPICAL LINE POST EMBEDMENT AND HINGE POINT OFFSET DETAILS	A77N3	86
MIDWEST GUARDRAIL SYSTEM - TYPICAL HEIGHT MEASUREMENT, DIKE POSITIONING, AND DELINEATION DETAILS	A77N4	87
MINOR CONCRETE VEGETATION CONTROL - GUARDRAIL SYSTEM		
MINOR CONCRETE VEGETATION CONTROL - GUARDRAIL SYSTEM	A77N5	88
MINOR CONCRETE VEGETATION CONTROL - GUARDRAIL SYSTEM NARROW VEGETATION CONTROL INSTALLATION	A77N5A	89
MINOR CONCRETE VEGETATION CONTROL - GUARDRAIL SYSTEM FOR TERMINAL SYSTEM END TREATMENTS	A77N6	90
MINOR CONCRETE VEGETATION CONTROL - GUARDRAIL SYSTEM AT STRUCTURE APPROACH	A77N7	91
MINOR CONCRETE VEGETATION CONTROL - GUARDRAIL SYSTEM AT FIXED OBJECT	A77N8	92
MINOR CONCRETE VEGETATION CONTROL - GUARDRAIL SYSTEM AT FIXED OBJECT	A77N9	93
MINOR CONCRETE VEGETATION CONTROL - GUARDRAIL SYSTEM AT FIXED OBJECT	A77N10	94
MINOR CONCRETE VEGETATION CONTROL - GUARDRAIL SYSTEM MISCELLANEOUS DETAILS	A77N11	95

PLAN TITLE | PLAN No. | PAGE

FIBER OR RUBBER MAT VEGETATION CONTROL - GUARDRAIL SYSTEM

FIBER OR RUBBER MAT VEGETATION CONTROL - GUARDRAIL SYSTEM A77N12 96
FIBER OR RUBBER MAT VEGETATION CONTROL - GUARDRAIL SYSTEM
NARROW VEGETATION CONTROL INSTALLATION A77N13 97
FIBER OR RUBBER MAT VEGETATION CONTROL - GUARDRAIL SYSTEM
FOR TERMINAL SYSTEM END TREATMENTS A77N14 98
FIBER OR RUBBER MAT VEGETATION CONTROL - GUARDRAIL SYSTEM
AT STRUCTURE APPROACH A77N15 99
FIBER OR RUBBER MAT VEGETATION CONTROL - GUARDRAIL SYSTEM
AT FIXED OBJECT A77N16 100
FIBER OR RUBBER MAT VEGETATION CONTROL - GUARDRAIL SYSTEM
AT FIXED OBJECT A77N17 101
FIBER OR RUBBER MAT VEGETATION CONTROL - GUARDRAIL SYSTEM
AT FIXED OBJECT A77N18 102

MIDWEST GUARDRAIL SYSTEM - TYPICAL LAYOUTS FOR EMBANKMENTS

MIDWEST GUARDRAIL SYSTEM - TYPICAL LAYOUTS FOR EMBANKMENTS A77P1 103
MIDWEST GUARDRAIL SYSTEM - TYPICAL LAYOUTS FOR EMBANKMENTS A77P2 104
MIDWEST GUARDRAIL SYSTEM - TYPICAL LAYOUTS FOR EMBANKMENTS A77P3 105
MIDWEST GUARDRAIL SYSTEM - TYPICAL LAYOUTS FOR EMBANKMENTS A77P4 106
MIDWEST GUARDRAIL SYSTEM - TYPICAL LAYOUTS FOR EMBANKMENTS A77P5 107
MIDWEST GUARDRAIL SYSTEM - TYPICAL LAYOUTS FOR EMBANKMENTS A77P6 108

MIDWEST GUARDRAIL SYSTEM - TYPICAL LAYOUTS FOR STRUCTURES

MIDWEST GUARDRAIL SYSTEM - TYPICAL LAYOUTS FOR STRUCTURE APPROACH A77Q1 109
MIDWEST GUARDRAIL SYSTEM - TYPICAL LAYOUTS FOR STRUCTURE APPROACH
AND BETWEEN STRUCTURES A77Q2 110
MIDWEST GUARDRAIL SYSTEM - TYPICAL LAYOUTS FOR STRUCTURE APPROACH A77Q3 111
MIDWEST GUARDRAIL SYSTEM - TYPICAL LAYOUTS FOR STRUCTURE DEPARTURE A77Q4 112
MIDWEST GUARDRAIL SYSTEM - TYPICAL LAYOUTS FOR STRUCTURE DEPARTURE A77Q5 113

MIDWEST GUARDRAIL SYSTEM - TYPICAL LAYOUTS FOR FIXED OBJECTS

MIDWEST GUARDRAIL SYSTEM - TYPICAL LAYOUTS FOR FIXED OBJECTS
BETWEEN SEPARATE ROADBEDS (TWO-WAY TRAFFIC) A77R1 114
MIDWEST GUARDRAIL SYSTEM - TYPICAL LAYOUTS FOR FIXED OBJECTS
BETWEEN SEPARATE ROADBEDS (ONE-WAY TRAFFIC) A77R2 115
MIDWEST GUARDRAIL SYSTEM - TYPICAL LAYOUTS FOR ROADSIDE FIXED OBJECTS A77R3 116
MIDWEST GUARDRAIL SYSTEM - TYPICAL LAYOUTS FOR ROADSIDE FIXED OBJECTS A77R4 117
MIDWEST GUARDRAIL SYSTEM - TYPICAL LAYOUTS FOR ROADSIDE FIXED OBJECTS A77R5 118
MIDWEST GUARDRAIL SYSTEM - TYPICAL LAYOUTS FOR ROADSIDE FIXED OBJECTS A77R6 119
MIDWEST GUARDRAIL SYSTEM - TYPICAL LAYOUTS FOR ROADSIDE FIXED OBJECTS A77R7 120
MIDWEST GUARDRAIL SYSTEM - TYPICAL LAYOUTS FOR ROADSIDE FIXED OBJECTS A77R8 121

MIDWEST GUARDRAIL SYSTEM - END ANCHORAGE AND RAIL TENSIONING ASSEMBLY

MIDWEST GUARDRAIL SYSTEM - END ANCHOR ASSEMBLY (TYPE SFT-M) A77S1 122
MIDWEST GUARDRAIL SYSTEM - RAIL TENSIONING ASSEMBLY A77S2 123

PLAN TITLE | PLAN No. | PAGE

MIDWEST GUARDRAIL SYSTEM - END ANCHORAGE AND RAIL TENSIONING ASSEMBLY (CONTINUED)

METAL RAILING ANCHOR CABLE AND ANCHOR PLATE DETAILS A77S3 124
METAL RAILING END ANCHOR ASSEMBLY (TYPE CA) A77T1 125
MIDWEST GUARDRAIL SYSTEM - BURIED POST END ANCHOR (TYPE B-F) A77T2 126
MIDWEST GUARDRAIL SYSTEM - BURIED POST END ANCHOR (TYPE B-S) A77T3 127

MINOR CONCRETE VEGETATION CONTROL - THRIE BEAM BARRIER

MINOR CONCRETE VEGETATION CONTROL - SINGLE THRIE BEAM BARRIER A78C3 128
MINOR CONCRETE VEGETATION CONTROL - DOUBLE THRIE BEAM BARRIER A78C4 129
MINOR CONCRETE VEGETATION CONTROL - THRIE BEAM BARRIER
AT FIXED OBJECTS IN MEDIAN A78C5 130
MINOR CONCRETE VEGETATION CONTROL - THRIE BEAM BARRIER
AT STRUCTURE APPROACH A78C6 131

FIBER OR RUBBER MAT VEGETATION CONTROL - THRIE BEAM BARRIER

FIBER OR RUBBER MAT VEGETATION CONTROL - SINGLE THRIE BEAM BARRIER A78C7 132
FIBER OR RUBBER MAT VEGETATION CONTROL - DOUBLE THRIE BEAM BARRIER A78C8 133
FIBER OR RUBBER MAT VEGETATION CONTROL - THRIE BEAM BARRIER
AT FIXED OBJECTS IN MEDIAN A78C9 134
FIBER OR RUBBER MAT VEGETATION CONTROL - THRIE BEAM BARRIER
AT STRUCTURE APPROACH A78C10 135

THRIE BEAM BARRIER (TYPE M) – STANDARD RAILING SECTIONS

THRIE BEAM BARRIER (TYPE M) - STANDARD BARRIER RAILING SECTION A78M1 136
THRIE BEAM BARRIER (TYPE M) - STANDARD HARDWARE DETAILS A78M2 137
THRIE BEAM BARRIER (TYPE M) - POST AND BLOCK DETAILS A78M3 138

THRIE BEAM BARRIER (TYPE M) – TRANSITIONS

SINGLE AND DOUBLE THRIE BEAM BARRIER (TYPE M) -
TRANSITION TO MIDWEST GUARDRAIL SYSTEM A78P1 139
THRIE BEAM BARRIER (TYPE M) - TRANSITION TO THRIE BEAM RAIL A78P2 140

THRIE BEAM BARRIER (TYPE M) – END ANCHORS, EMERGENCY PASSAGEWAYS, AND AT FIXED OBJECTS IN MEDIAN

THRIE BEAM BARRIER (TYPE M) - END ANCHORS A78Q1 141
DOUBLE THRIE BEAM BARRIER (TYPE M) - EMERGENCY PASSAGEWAY DETAILS A78Q2 142
THRIE BEAM BARRIER (TYPE M) - AT FIXED OBJECTS IN MEDIAN A78Q3 143

THRIE BEAM BARRIER (TYPE M) – TYPICAL LAYOUT FOR CONNECTION TO BRIDGE RAILING

THRIE BEAM BARRIER (TYPE M) - TYPICAL LAYOUT
FOR CONNECTION TO BRIDGE RAILING A78R 144

PLAN TITLE | PLAN No. | PAGE

APPROACH GUARDRAIL TRANSITION (TYPE AGT) AND DEPARTING CONNECTIONS – MIDWEST GUARDRAIL SYSTEM AND THRIE BEAM BARRIER (TYPE M) CONNECTION DETAILS TO BRIDGE RAILINGS, ABUTMENTS, AND WALLS

TRANSITION RAILING (TYPE AGT) A79A1 145
TRANSITION RAILING (TYPE AGT) TO THRIE BEAM BARRIER (TYPE M) A79A2 146
TRANSITION RAILING (TYPE AGT) DETAILS A79A3 147
TRANSITION RAILING (TYPE AGT) TO BRIDGE RAILINGS WITHOUT SIDEWALKS A79B1 148
TRANSITION RAILING (TYPE AGT) TO BRIDGE RAILINGS WITH SIDEWALKS A79B2 149
TRANSITION RAILING (TYPE AGT) CONNECTIONS TO ABUTMENTS AND WALLS A79C1 150
DEPARTING TRANSITION CONNECTIONS TO ABUTMENTS AND WALLS A79C2 151

CRASH CUSHIONS

CRASH CUSHION - SAND FILLED (UNIDIRECTIONAL) A81A 152
CRASH CUSHION - SAND FILLED (UNIDIRECTIONAL) A81B 153
CRASH CUSHION - SAND FILLED (BIDIRECTIONAL) A81C 154

FENCES

TEMPORARY DESERT TORTOISE FENCE A84A 155
DESERT TORTOISE FENCE A84B 156
CHAIN LINK FENCE A85 157
CHAIN LINK FENCE DETAILS A85A 158
CHAIN LINK FENCE DETAILS A85B 159
BARBED WIRE AND WIRE MESH FENCES A86 160
BARBED WIRE AND WIRE MESH FENCE DETAIL ON SHARP BREAK IN GRADE A86A 161
BARBED WIRE AND WIRE MESH FENCE DETAILS A86B 162
BARBED WIRE AND WIRE MESH FENCE DETAILS AT DITCH CROSSING A86C 163
BARBED WIRE AND WIRE MESH FENCE - MISCELLANEOUS DETAILS A86D 164

CURBS, DRIVEWAYS, DIKES, CURB RAMPS, AND ACCESSIBLE PARKING

CURBS AND DRIVEWAYS A87A 165
HOT MIX ASPHALT DIKES A87B 166
CURB RAMP DETAILS A88A 167
CURB RAMP AND ISLAND PASSAGEWAY DETAILS A88B 168
ACCESSIBLE PARKING OFF-STREET A90A 169
ACCESSIBLE PARKING ON-STREET A90B 170

PAVEMENTS

JOINTED PLAIN CONCRETE PAVEMENT - NEW CONSTRUCTION P1 171
JOINTED PLAIN CONCRETE PAVEMENT (WIDENED LANE) - NEW CONSTRUCTION P2 172
JOINTED PLAIN CONCRETE PAVEMENT -
LANE AND SHOULDER/MEDIAN ADDITION OR REPLACEMENT P3A 173
JOINTED PLAIN CONCRETE PAVEMENT (WIDENED LANE) -
LANE AND SHOULDER/MEDIAN ADDITION OR REPLACEMENT P3B 174
JOINTED PLAIN CONCRETE PAVEMENT - MEDIAN ADDITION/RECONSTRUCTION P3C 175
CONTINUOUSLY REINFORCED CONCRETE PAVEMENT P4 176
CONTINUOUSLY REINFORCED CONCRETE PAVEMENT (WIDENED LANE) P5A 177

PLAN TITLE	PLAN No.	PAGE
PAVEMENTS (CONTINUED)		
CONTINUOUSLY REINFORCED CONCRETE PAVEMENT (WIDENED LANE) - LANE AND SHOULDER ADDITION OR REPLACEMENT	P5B	178
SPALL REPAIR	P6	179
DOWEL BAR RETROFIT	P7	180
INDIVIDUAL SLAB REPLACEMENT WITH RAPID STRENGTH CONCRETE	P8A	181
INDIVIDUAL SLAB REPLACEMENT DOWEL BAR BASKET DETAILS	P8B	182
CONCRETE PAVEMENT - DOWEL BAR DETAILS	P10	183
CONCRETE PAVEMENT - DOWEL BAR BASKET DETAILS	P12	184
CONTINUOUSLY REINFORCED CONCRETE PAVEMENT - SINGLE PIECE TRANSVERSE BAR ASSEMBLY	P13	185
CONTINUOUSLY REINFORCED CONCRETE PAVEMENT - TRANSVERSE CONSTRUCTION JOINT	P14	186
CONCRETE PAVEMENT - TIE BAR DETAILS	P15	187
CONTINUOUSLY REINFORCED CONCRETE PAVEMENT - TIE BARS AND JOINT DETAILS	P16	188
CONCRETE PAVEMENT - TIE BAR BASKET DETAILS	P17	189
CONCRETE PAVEMENT - LANE SCHEMATICS AND ISOLATION JOINT DETAIL	P18	190
JOINT SEALS	P20	191
CONCRETE PAVEMENT - END PANEL PAVEMENT TRANSITIONS	P30	192
CONTINUOUSLY REINFORCED CONCRETE PAVEMENT - TERMINAL JOINT DETAILS	P31A	193
CONTINUOUSLY REINFORCED CONCRETE PAVEMENT - EXPANSION TERMINAL JOINT SYSTEM	P32	194
CONCRETE PAVEMENT - LANE DROP PAVING DETAILS No. 1	P33	195
CONCRETE PAVEMENT - LANE DROP PAVING DETAILS No. 2	P34	196
CONCRETE PAVEMENT - RAMP TRANSITION PAVING DETAILS	P35	197
CONCRETE PAVEMENT - DRAINAGE INLET DETAILS No. 1	P45	198
CONCRETE PAVEMENT - DRAINAGE INLET DETAILS No. 2	P46	199
PAVEMENT STRUCTURE - DRAINAGE SYSTEM DETAILS	P50	200
EDGE DRAIN OUTLET AND VENT DETAILS	P51	201
EDGE DRAIN CLEANOUT AND VENT DETAILS	P52	202
CROSS DRAIN INTERCEPTOR DETAILS	P53	203
HOT MIX ASPHALT PAVING (LONGITUDINAL TAPERED NOTCHED WEDGE JOINT)	P70	204
PAVEMENT EDGE TREATMENTS	P74	205
PAVEMENT EDGE TREATMENTS - OVERLAYS	P75	206
PAVEMENT EDGE TREATMENTS - NEW CONSTRUCTION	P76	207
DRAINAGE INLETS, PIPE INLETS, AND GRATES		
DRAINAGE INLET MARKERS	D71	208
CIP DRAINAGE INLETS - TYPES OS, OL AND GOL	D72A	209
CIP DRAINAGE INLETS - TYPES G1, G2, G3, G4, G5 AND G6	D72B	210
CIP DRAINAGE INLETS - TYPES G1, G2, G3, G4, G5 AND G6	D72C	211
CIP DRAINAGE INLETS - TYPES GT1, GT2, GT3 AND GT4	D72D	212
CIP DRAINAGE INLETS - TYPES GO AND GDO	D72E	213
CIP DRAINAGE INLET NOTES	D72F	214
CIP DRAINAGE INLET TABLES	D72G	215
PRECAST DRAINAGE INLETS - TYPES OS, OL AND GOL	D73A	216
PRECAST DRAINAGE INLETS - TYPES G1, G2, G3, G4, G5 AND G6	D73B	217
PRECAST DRAINAGE INLETS - TYPES G1, G2, G3, G4, G5 AND G6	D73C	218

PLAN TITLE	PLAN No.	PAGE
DRAINAGE INLETS, PIPE INLETS, AND GRATES (CONTINUED)		
PRECAST DRAINAGE INLETS - TYPES GT1, GT2, GT3 AND GT4	D73D	219
PRECAST DRAINAGE INLETS - TYPES GO AND GDO	D73E	220
PRECAST DRAINAGE INLET NOTES	D73F	221
PRECAST DRAINAGE INLET TABLES	D73G	222
DRAINAGE INLET DETAILS	D74	223
STEEL PIPE INLETS	D75A	224
CONCRETE PIPE INLETS	D75B	225
PIPE INLETS - LADDER AND TRASH RACK DETAILS	D75C	226
GRATE DETAILS No. 1	D77A	227
GRATE DETAILS No. 2	D77B	228
ALTERNATIVE HINGED COVER FOR TYPE OL AND OS INLETS AND TRASH RACK FOR TYPE OCP INLET	D77C	229
GUTTER AND INLET DEPRESSIONS		
GUTTER DEPRESSIONS	D78A	230
INLET DEPRESSIONS - CONCRETE SHOULDERS	D78B	231
INLET DEPRESSIONS - HOT MIX ASPHALT SHOULDERS	D78C	232
CONCRETE PIPE - DIRECT DESIGN METHOD		
PRECAST REINFORCED CONCRETE PIPE - DIRECT DESIGN METHOD	D79	233
PRECAST REINFORCED CONCRETE PIPE - DIRECT DESIGN METHOD	D79A	234
BOX CULVERTS		
CAST-IN-PLACE REINFORCED CONCRETE SINGLE BOX CULVERT	D80	235
CAST-IN-PLACE REINFORCED CONCRETE DOUBLE BOX CULVERT	D81	236
CAST-IN-PLACE REINFORCED CONCRETE BOX CULVERT - MISCELLANEOUS DETAILS	D82	237
PRECAST REINFORCED CONCRETE BOX CULVERT	D83A	238
PRECAST REINFORCED CONCRETE BOX CULVERT - MISCELLANEOUS DETAILS	D83B	239
BOX CULVERT WINGWALLS - TYPES A, B AND C	D84	240
BOX CULVERT WINGWALLS - TYPES D AND E	D85	241
BOX CULVERT WARPED WINGWALLS	D86A	242
PIPE AND ARCH CULVERT - ENDWALLS AND WARPED WINGWALLS		
PIPE CULVERT HEADWALLS, ENDWALLS AND WARPED WINGWALLS	D86B	243
ARCH CULVERT HEADWALLS, ENDWALLS AND WARPED WINGWALLS	D86C	244
PIPE DOWNDRAINS, ANCHORAGE SYSTEMS, AND OVERSIDE DRAINS		
CORRUGATED METAL PIPE DOWNDRAIN DETAILS	D87A	245
PLASTIC PIPE DOWNDRAIN DETAILS	D87B	246
CABLE ANCHORAGE SYSTEM	D87C	247
OVERSIDE DRAINS	D87D	248

PLAN TITLE	PLAN No.	PAGE
CONSTRUCTION LOADS ON CULVERTS AND STRUT DETAILS		
CONSTRUCTION LOADS ON CULVERTS	D88	249
STRUT DETAILS FOR STRUCTURAL STEEL PIPES, ARCHES AND VEHICULAR UNDERCROSSING	D88A	250
PIPE CULVERT HEADWALLS, ENDWALLS, WINGWALLS, AND JUNCTION STRUCTURE		
PIPE CULVERT HEADWALLS - STRAIGHT AND "L"	D89A	251
PIPE CULVERT HEADWALLS - STRAIGHT AND "L"	D89B	252
PIPE CULVERT HEADWALLS, ENDWALLS AND WINGWALLS - TYPES A, B AND C	D90	253
CAST-IN-PLACE REINFORCED CONCRETE JUNCTION STRUCTURE	D91A	254
CAST-IN-PLACE REINFORCED CONCRETE JUNCTION STRUCTURE	D91B	255
PIPE RISER AND DRAINAGE INLET RISER CONNECTIONS		
PIPE RISER CONNECTIONS	D93A	256
DRAINAGE INLET RISER CONNECTIONS	D93B	257
PIPE RISER WITH DEBRIS RACK CAGE	D93C	258
FLARED END SECTIONS		
METAL AND PLASTIC FLARED END SECTIONS	D94A	259
CONCRETE FLARED END SECTIONS	D94B	260
PIPE COUPLING AND JOINT DETAILS		
CORRUGATED METAL PIPE COUPLING DETAILS No. 1 - ANNULAR COUPLING BAND, BAR AND STRAP, AND ANGLE CONNECTIONS	D97A	261
CORRUGATED METAL PIPE COUPLING DETAILS No. 3 - HELICAL AND UNIVERSAL COUPLERS	D97C	262
CORRUGATED METAL PIPE COUPLING DETAILS No. 4 - HUGGER COUPLING BANDS	D97D	263
CORRUGATED METAL PIPE COUPLING DETAILS No. 5 - STANDARD JOINT	D97E	264
CORRUGATED METAL PIPE COUPLING DETAILS No. 6 - POSITIVE JOINT	D97F	265
CORRUGATED METAL PIPE COUPLING DETAILS No. 7 - DOWNDRAIN	D97G	266
REINFORCED CONCRETE PIPE OR NON-REINFORCED CONCRETE PIPE - STANDARD AND POSITIVE JOINTS	D97H	267
CORRUGATED POLYVINYL CHLORIDE PIPE WITH SMOOTH INTERIOR - STANDARD AND POSITIVE JOINTS	D97I	268
COMPOSITE STEEL SPIRAL RIB PIPE WITH SMOOTH INTERIOR - STANDARD JOINT	D97J	269
SLOTTED AND GRATED LINE DRAINS		
SLOTTED CORRUGATED STEEL PIPE DRAIN DETAILS	D98A	270
SLOTTED CORRUGATED STEEL PIPE DRAIN DETAILS	D98B	271
SLOTTED PLASTIC PIPE DRAIN DETAILS	D98D	272
SLOTTED PIPE GRATE EXTENSION DETAILS	D98F	273
GRATED LINE DRAIN DETAILS No. 1 - POLYMER CONCRETE, 4" NOMINAL WIDTH	D98G	274

PLAN TITLE	PLAN No.	PAGE
SLOTTED AND GRATED LINE DRAINS (CONTINUED)		
GRATED LINE DRAIN DETAILS No. 2 - INLET CONNECTION DETAILS (ALL TYPES EXCEPT 4" NOMINAL WIDTH POLYMER CONCRETE)	D98H	275
GRATED LINE DRAIN DETAILS No. 3 - (ALL TYPES EXCEPT 4" NOMINAL WIDTH POLYMER CONCRETE)	D98I	276
GRATED LINE DRAIN DETAILS No. 4 - CONNECTION TO EXISTING DRAINAGE STRUCTURE	D98J	277
GABIONS AND UNDERDRAINS		
GABION BASKET DETAILS No. 1	D100A	278
GABION BASKET DETAILS No. 2	D100B	279
UNDERDRAINS	D102	280
STORMWATER TREATMENT BMPs		
LADDER DETAILS	D118	281
INFILTRATION TRENCH AND OBSERVATION WELL	D131	282
GROSS SOLIDS REMOVAL DEVICE - INCLINED SCREEN LEGEND	D139A	283
GROSS SOLIDS REMOVAL DEVICE - INCLINED SCREEN LAYOUT	D139B	284
GROSS SOLIDS REMOVAL DEVICE - INCLINED SCREEN DETAILS No. 1	D139C	285
GROSS SOLIDS REMOVAL DEVICE - INCLINED SCREEN DETAILS No. 2	D139D	286
GROSS SOLIDS REMOVAL DEVICE - INCLINED SCREEN DETAILS No. 3 WALL OPENING DETAILS	D139E	287
GROSS SOLIDS REMOVAL DEVICE - INCLINED SCREEN DETAILS No. 4 WEDGE-WIRE SCREEN	D139F1	288
GROSS SOLIDS REMOVAL DEVICE - INCLINED SCREEN DETAILS No. 5 WEDGE-WIRE SCREEN	D139F2	289
GROSS SOLIDS REMOVAL DEVICE - INCLINED SCREEN DETAILS No. 6 PULTRUDED FRP SCREEN	D139G1	290
GROSS SOLIDS REMOVAL DEVICE - INCLINED SCREEN DETAILS No. 7 PULTRUDED FRP SCREEN	D139G2	291
GROSS SOLIDS REMOVAL DEVICE - LINEAR RADIAL LEGEND	D140A	292
GROSS SOLIDS REMOVAL DEVICE - LINEAR RADIAL LAYOUT	D140B	293
GROSS SOLIDS REMOVAL DEVICE - LINEAR RADIAL DETAILS	D140C	294
GROSS SOLIDS REMOVAL DEVICE - LINEAR RADIAL OVERFLOW PIPE DETAILS	D140D	295
GROSS SOLIDS REMOVAL DEVICE - LINEAR RADIAL SCREENED PIPE DETAILS	D140E	296
GROSS SOLIDS REMOVAL DEVICE - LINEAR RADIAL GRATE PANEL DETAILS	D140F	297
GROSS SOLIDS REMOVAL DEVICE - LINEAR RADIAL (HIGH VELOCITY) LAYOUT	D140G	298
GROSS SOLIDS REMOVAL DEVICE - LINEAR RADIAL (HIGH VELOCITY) DETAILS	D140H	299
LANDSCAPE AND EROSION CONTROL		
LANDSCAPE AND EROSION CONTROL SYMBOLS	H1	300
LANDSCAPE DETAILS	H2	301
LANDSCAPE DETAILS	H3	302
LANDSCAPE DETAILS (SPRINKLER ASSEMBLY)	H4	303
LANDSCAPE DETAILS (SWING JOINT AND PROTECTOR)	H5	304

PLAN TITLE	PLAN No.	PAGE
LANDSCAPE AND EROSION CONTROL (CONTINUED)		
LANDSCAPE DETAILS	H6	305
LANDSCAPE DETAILS	H7	306
LANDSCAPE DETAILS	H8	307
LANDSCAPE DETAILS	H9	308
IRRIGATION CONTROLLER ENCLOSURE CABINET	H10	309
SITE FURNISHING DETAILS (BICYCLE RACKS)	H21	310
EROSION CONTROL DETAILS - FIBER ROLL AND COMPOST SOCK	H51	311
ROLLED EROSION CONTROL PRODUCT	H52	312
TEMPORARY CRASH CUSHIONS, RAILING, AND TRAFFIC SCREEN		
TEMPORARY CRASH CUSHION - SAND FILLED (UNIDIRECTIONAL)	T1A	313
TEMPORARY CRASH CUSHION - SAND FILLED (UNIDIRECTIONAL)	T1A1	314
TEMPORARY CRASH CUSHION - SAND FILLED (BIDIRECTIONAL)	T1B	315
TEMPORARY CRASH CUSHION - SAND FILLED (SHOULDER INSTALLATIONS)	T2	316
TEMPORARY RAILING (TYPE K)	T3A	317
TEMPORARY RAILING (TYPE K)	T3B	318
TEMPORARY BARRIER SYSTEM (CROSS BOLT)	T3C	319
TEMPORARY BARRIER SYSTEM (CROSS BOLT)	T3D	320
TEMPORARY BARRIER SYSTEM (CROSS BOLT)	T3E	321
TEMPORARY BARRIER SYSTEM (CAL F-23)	T3F	322
TEMPORARY BARRIER SYSTEM (CAL F-23)	T3F2	323
TEMPORARY BARRIER SYSTEM (STAKING OR ANCHORING)	T3G	324
TEMPORARY BARRIER SYSTEM (STAKING OR ANCHORING)	T3G2	325
TEMPORARY TRAFFIC SCREEN	T4	326
TEMPORARY TRAFFIC SCREEN (CROSS BOLT)	T4A	327
TEMPORARY TRAFFIC SCREEN (CAL F-23)	T4B	328
TEMPORARY TERMINAL SECTION (TYPE K)	T5	329
TEMPORARY TRAFFIC CONTROL SYSTEMS		
TRAFFIC CONTROL SYSTEM TABLES FOR LANE AND RAMP CLOSURES	T9	330
TRAFFIC CONTROL SYSTEM FOR LANE CLOSURE ON FREEWAYS AND EXPRESSWAYS	T10	331
TRAFFIC CONTROL SYSTEM FOR LANE CLOSURE ON FREEWAYS AND EXPRESSWAYS	T10A	332
TRAFFIC CONTROL SYSTEM FOR LANE CLOSURE ON MULTILANE CONVENTIONAL HIGHWAYS	T11	333
TRAFFIC CONTROL SYSTEM FOR CHANGEABLE LANE CLOSURE ON MULTILANE CONVENTIONAL HIGHWAYS AND EXPRESSWAYS	T11A	334
TRAFFIC CONTROL SYSTEM FOR HALF ROAD CLOSURE ON MULTILANE CONVENTIONAL HIGHWAYS AND EXPRESSWAYS	T12	335
TRAFFIC CONTROL SYSTEM WITH REVERSIBLE CONTROL ON TWO LANE CONVENTIONAL HIGHWAYS	T13	336
TRAFFIC CONTROL SYSTEM - TWO LANE CONVENTIONAL HIGHWAYS	T13A	337
TRAFFIC CONTROL SYSTEM - TWO LANE CONVENTIONAL HIGHWAYS	T13B	338
TRAFFIC CONTROL SYSTEM - TWO LANE CONVENTIONAL HIGHWAYS	T13C	339

PLAN TITLE	PLAN No.	PAGE
TEMPORARY TRAFFIC CONTROL SYSTEMS (CONTINUED)		
TRAFFIC CONTROL SYSTEM FOR RAMP CLOSURE	T14	340
TRAFFIC CONTROL SYSTEM FOR MOVING LANE CLOSURE ON MULTILANE HIGHWAYS	T15	341
TRAFFIC CONTROL SYSTEM FOR MOVING LANE CLOSURE ON MULTILANE HIGHWAYS	T16	342
TRAFFIC CONTROL SYSTEM FOR MOVING LANE CLOSURE ON TWO LANE HIGHWAYS	T17	343
TRAFFIC CONTROL SYSTEM - CONSTRUCTION WORK ZONE SPEED LIMIT REDUCTION ON FREEWAYS AND EXPRESSWAYS	T18	344
TRAFFIC CONTROL SYSTEM - CONSTRUCTION WORK ZONE SPEED LIMIT REDUCTION ON CONVENTIONAL HIGHWAYS	T19	345
TRAFFIC CONTROL SYSTEM - CONSTRUCTION WORK ZONE SPEED LIMIT REDUCTION DETAILS	T20	346
TRAFFIC CONTROL SYSTEM - CONSTRUCTION WORK ZONE SPEED LIMIT REDUCTION TWENTY-FOUR HOURS A DAY 7 DAYS A WEEK (24/7)	T21	347
TRAFFIC CONTROL SYSTEM FOR CONSTRUCTION WORK ZONE SPEED LIMIT REDUCTION ON TWO LANE CONVENTIONAL HIGHWAYS	T22	348
MOBILE BARRIER SYSTEMS		
MOBILE BARRIER SYSTEM	T24	349
MOBILE BARRIER SYSTEM	T25	350
TEMPORARY AUTOMATED END OF QUEUE WARNING SYSTEM TYPE 1 (QUEUE ≤ 3.5 MILES)	T26	351
TEMPORARY AUTOMATED END OF QUEUE WARNING SYSTEM TYPE 2 (QUEUE ≤ 7.5 MILES)	T27	352
TEMPORARY PEDESTRIAN ACCESS ROUTES		
TEMPORARY PEDESTRIAN ACCESS ROUTES - TYPICAL SIDEWALK CLOSURE AND PEDESTRIAN DETOUR	T30	353
TEMPORARY PEDESTRIAN ACCESS ROUTES - TYPICAL SIDEWALK DIVERSION WITHIN ROADBED	T31	354
TEMPORARY PEDESTRIAN ACCESS ROUTES - TYPICAL SIDEWALK/CROSSWALK CLOSURE AND PEDESTRIAN DETOUR	T32	355
TEMPORARY PEDESTRIAN ACCESS ROUTES - RAMP	T33	356
TEMPORARY PEDESTRIAN ACCESS ROUTES - CURB RAMP OPTIONS	T34	357
TEMPORARY WATER POLLUTION CONTROL		
TEMPORARY WATER POLLUTION CONTROL DETAILS (TEMPORARY SILT FENCE)	T51	358
TEMPORARY WATER POLLUTION CONTROL DETAILS (TEMPORARY STRAW BALE BARRIER)	T52	359
TEMPORARY WATER POLLUTION CONTROL DETAILS (TEMPORARY COVER)	T53	360
TEMPORARY WATER POLLUTION CONTROL DETAILS (TEMPORARY EROSION CONTROL BLANKET)	T54	361
TEMPORARY WATER POLLUTION CONTROL DETAILS (TEMPORARY EROSION CONTROL BLANKET)	T55	362

PLAN TITLE	PLAN No.	PAGE
TEMPORARY WATER POLLUTION CONTROL (CONTINUED)		
TEMPORARY WATER POLLUTION CONTROL DETAILS (TEMPORARY FIBER ROLL)	T56	363
TEMPORARY WATER POLLUTION CONTROL DETAILS (TEMPORARY CHECK DAM)	T57	364
TEMPORARY WATER POLLUTION CONTROL DETAILS (TEMPORARY CONSTRUCTION ENTRANCE)	T58	365
TEMPORARY WATER POLLUTION CONTROL DETAILS (TEMPORARY CONCRETE WASHOUT FACILITY)	T59	366
TEMPORARY WATER POLLUTION CONTROL DETAILS (TEMPORARY REINFORCED SILT FENCE)	T60	367
TEMPORARY WATER POLLUTION CONTROL DETAILS (TEMPORARY DRAINAGE INLET PROTECTION)	T61	368
TEMPORARY WATER POLLUTION CONTROL DETAILS (TEMPORARY DRAINAGE INLET PROTECTION)	T62	369
TEMPORARY WATER POLLUTION CONTROL DETAILS (TEMPORARY DRAINAGE INLET PROTECTION)	T63	370
TEMPORARY WATER POLLUTION CONTROL DETAILS (TEMPORARY DRAINAGE INLET PROTECTION)	T64	371
TEMPORARY WATER POLLUTION CONTROL DETAILS (TEMPORARY HIGH-VISIBILITY FENCE)	T65	372
TEMPORARY WATER POLLUTION CONTROL DETAILS (TEMPORARY LARGE SEDIMENT BARRIER)	T66	373
TEMPORARY WATER POLLUTION CONTROL DETAILS (TEMPORARY CONSTRUCTION ROADWAY)	T67	374
BRIDGE DETAILS		
BRIDGE DETAILS	B0-1	375
BRIDGE DETAILS	B0-3	376
BRIDGE DETAILS	B0-5	377
BRIDGE DETAILS	B0-13	378
PILES		
16" AND 24" CAST-IN-DRILLED-HOLE CONCRETE PILE	B2-3	379
PILE DETAILS - CLASS 90 AND CLASS 140	B2-5	380
PILE DETAILS - CLASS 200	B2-8	381
LOAD TEST PILE DETAILS (1)	B2-9	382
LOAD TEST PILE DETAILS (2)	B2-10	383
LOAD TEST PILE DETAILS (3)	B2-11	384
RETAINING WALLS		
RETAINING WALL TYPE 1 (CASE 1)	B3-1A	385
RETAINING WALL TYPE 1 (CASE 2)	B3-1B	386
RETAINING WALL TYPE 1 (CASE 3)	B3-1C	387
RETAINING WALL TYPE 1A (CASE 1)	B3-3A	388
RETAINING WALL TYPE 1A (CASE 2)	B3-3B	389

PLAN TITLE	PLAN No.	PAGE
RETAINING WALLS (CONTINUED)		
RETAINING WALL TYPE 5 (CASE 1)	B3-4A	390
RETAINING WALL TYPE 5 (CASE 2)	B3-4B	391
RETAINING WALL TYPE 5 (CASE 3)	B3-4C	392
RETAINING WALL DETAILS No. 1	B3-5	393
RETAINING WALL DETAILS No. 2	B3-6	394
RETAINING WALL TYPE 6 (CASE 1)	B3-7A	395
RETAINING WALL TYPE 6 (CASE 2)	B3-7B	396
RETAINING WALL TYPE 6 DETAILS	B3-7C	397
T-BEAM DETAILS		
T-BEAM DETAILS	B6-1	398
UTILITY OPENINGS - T-BEAM	B6-10	399
JOINT SEALS		
JOINT SEALS (MAXIMUM MOVEMENT RANGE = 2")	B6-21	400
BOX GIRDER DETAILS		
BOX GIRDER DETAILS	B7-1	401
DECK DRAINS		
DECK DRAINS	B7-5	402
DECK DRAINS - TYPES D-1 AND D-2	B7-6	403
DECK DRAIN - TYPE D-3	B7-7	404
DECK DRAINAGE DETAILS	B7-8	405
UTILITY OPENING		
UTILITY OPENING - BOX GIRDER	B7-10	406
UTILITY DETAILS	B7-11	407
CAST-IN-PLACE POST-TENSIONED GIRDER		
CAST-IN-PLACE POST-TENSIONED GIRDER DETAILS	B8-5	408
STRUCTURE APPROACH		
STRUCTURE APPROACH - TYPE N (30)	B9-1	409
STRUCTURE APPROACH - TYPE R (30)	B9-2	410
STRUCTURE APPROACH - TYPE R (10)	B9-3	411
STRUCTURE APPROACH - TYPE EQ (10)	B9-4	412
STRUCTURE APPROACH - SLAB DETAILS	B9-5	413
STRUCTURE APPROACH - DRAINAGE DETAILS	B9-6	414

PLAN TITLE	PLAN No.	PAGE
CHAIN LINK RAILING, CABLE RAILING, AND TUBULAR HAND RAILING		
CHAIN LINK RAILING	B11-7	415
CABLE RAILING	B11-47	416
TUBULAR HANDRAILING	B11-51	417
CHAIN LINK RAILING TYPE 7	B11-52	418
BRIDGE CONCRETE BARRIERS		
CONCRETE BARRIER TYPE 732SW DETAILS No. 1	B11-58	419
CONCRETE BARRIER TYPE 732SW DETAILS No. 2	B11-59	420
CONCRETE BARRIER TYPE 732SW DETAILS No. 3	B11-59A	421
CONCRETE BARRIERS		
CONCRETE BARRIER TYPE 836 DETAILS No. 1	B11-79	422
CONCRETE BARRIER TYPE 836 DETAILS No. 2	B11-80	423
CONCRETE BARRIER TYPE 836 DETAILS No. 3	B11-80A	424
CONCRETE BARRIER TYPE 842 DETAILS No. 1	B11-81	425
CONCRETE BARRIER TYPE 842 DETAILS No. 2	B11-82	426
CONCRETE BARRIER TYPE 842 DETAILS No. 3	B11-82A	427
CONCRETE BARRIER TYPE 85 DETAILS No. 1	B11-83	428
CONCRETE BARRIER TYPE 85 DETAILS No. 2	B11-83A	429
CONCRETE BARRIER TYPE 85 DETAILS No. 3	B11-84	430
CONCRETE BARRIER TYPE 85 DETAILS No. 4	B11-85	431
CONCRETE BARRIER TYPE 85 DETAILS No. 5	B11-86	432
CONCRETE BARRIER TYPE 85 DETAILS No. 6	B11-87	433
BRIDGE METAL RAIL BARRIERS		
CALIFORNIA ST-75 BRIDGE RAIL DETAILS No. 1	B11-200	434
CALIFORNIA ST-75 BRIDGE RAIL DETAILS No. 2	B11-201	435
CALIFORNIA ST-75 BRIDGE RAIL DETAILS No. 3	B11-202	436
CALIFORNIA ST-75SW BRIDGE RAIL DETAILS No. 1	B11-205	437
CALIFORNIA ST-75SW BRIDGE RAIL DETAILS No. 2	B11-206	438
CALIFORNIA ST-75SW BRIDGE RAIL DETAILS No. 3	B11-207	439
CALIFORNIA ST-76 BRIDGE RAIL DETAILS No. 1	B11-210	440
CALIFORNIA ST-76 BRIDGE RAIL DETAILS No. 2	B11-211	441
CALIFORNIA ST-76 BRIDGE RAIL DETAILS No. 3	B11-212	442
CALIFORNIA ST-76SW BRIDGE RAIL DETAILS No. 1	B11-215	443
CALIFORNIA ST-76SW BRIDGE RAIL DETAILS No. 2	B11-216	444
CALIFORNIA ST-76SW BRIDGE RAIL DETAILS No. 3	B11-217	445
CALIFORNIA BRIDGE RAIL ST-75, ST-75SW, ST-76, AND ST-76SW POST AND RAIL DETAILS	B11-220	446
CALIFORNIA BRIDGE RAIL ST-75, ST-75SW, ST-76, AND ST-76SW RAIL SPLICE DETAILS	B11-221	447
CALIFORNIA BRIDGE RAIL ST-75, ST-75SW, ST-76, AND ST-76SW PARAPET SHOE DETAILS	B11-222	448

PLAN TITLE	PLAN No.	PAGE
STRUCTURAL STEEL PLATE VEHICULAR UNDERCROSSING		
STRUCTURAL STEEL PLATE VEHICULAR UNDERCROSSING	B14-1	449
COMMUNICATION AND SPRINKLER CONTROL CONDUITS (BRIDGE)		
COMMUNICATION AND SPRINKLER CONTROL CONDUITS (CONDUIT LESS THAN 4")	B14-3	450
WATER SUPPLY LINE (BRIDGE)		
WATER SUPPLY LINE (BRIDGE) (PIPE SIZES LESS THAN 4")	B14-4	451
WATER SUPPLY LINE (DETAILS) (PIPE SIZES LESS THAN 4")	B14-5	452
SOUND WALLS		
SOUND WALL MASONRY BLOCK ON FOOTING DETAILS (1)	B15-1	453
SOUND WALL MASONRY BLOCK ON FOOTING DETAILS (2)	B15-2	454
SOUND WALL MASONRY BLOCK ON PILE CAP DETAILS (1)	B15-3	455
SOUND WALL MASONRY BLOCK ON PILE CAP DETAILS (2)	B15-4	456
SOUND WALL MASONRY BLOCK ON PILE CAP DETAILS (3)	B15-5	457
SOUND WALL MASONRY BLOCK ON TYPE 836S/SV BARRIER DETAILS (1)	B15-6	458
SOUND WALL MASONRY BLOCK ON TYPE 836S/SV BARRIER DETAILS (2)	B15-7	459
SOUND WALL MASONRY BLOCK ON TYPE 836S/SV BARRIER DETAILS (3)	B15-8	460
SOUND WALL MASONRY BLOCK MISCELLANEOUS DETAILS	B15-9	461
SOUND WALL MASONRY BLOCK ON FOOTING OR PILE CAP - 5'-0" ACCESS GATE DETAILS (1)	B15-10	462
SOUND WALL MASONRY BLOCK ON FOOTING OR PILE CAP - 5'-0" ACCESS GATE DETAILS (2)	B15-11	463
SOUND WALL MASONRY BLOCK ON BARRIER - 5'-0" ACCESS GATE DETAILS (1)	B15-12	464
SOUND WALL MASONRY BLOCK ON BARRIER - 5'-0" ACCESS GATE DETAILS (2)	B15-13	465
SOUND WALL MASONRY BLOCK ACCESS GATE LOCKING DETAILS	B15-14	466
SOUND WALL MASONRY BLOCK ON TYPE 836S/SV BARRIER ON PILE FOOTING FOR SPANNING UTILITIES	B15-15	467
ROADSIDE SIGNS		
ROADSIDE SIGNS - TYPICAL INSTALLATION DETAILS	RS1	468
ROADSIDE SIGNS - WOOD POST - TYPICAL INSTALLATION DETAILS	RS2	469
ROADSIDE SIGNS - LAMINATED WOOD BOX POST - TYPICAL INSTALLATION DETAILS No. 1	RS3	470
ROADSIDE SIGNS - LAMINATED WOOD BOX POST - TYPICAL EMS INSTALLATION DETAILS No. 2	RS3A	471
ROADSIDE SIGNS - LAMINATED WOOD BOX POST - EXIT PLAQUE INSTALLATION DETAILS No. 3	RS3B	472
ROADSIDE SIGNS - LAMINATED WOOD BOX POST - WORKABLE CONFIGURATIONS DETAILS No. 4	RS3C	473
ROADSIDE SIGNS - LAMINATED WOOD BOX POST - WORKABLE CONFIGURATIONS DETAILS No. 5	RS3D	474
ROADSIDE SIGNS - LAMINATED WOOD BOX POST - WORKABLE CONFIGURATIONS DETAILS No. 6	RS3E	475

PLAN TITLE	PLAN No.	PAGE
ROADSIDE SIGNS (CONTINUED)		
ROADSIDE SIGNS - TYPICAL INSTALLATION - MISCELLANEOUS DETAILS	RS4	476
ROADSIDE SIGNS - PSST POST - TYPICAL INSTALLATION DETAILS No. 1	RS5	477
ROADSIDE SIGNS - PSST POST - TYPICAL INSTALLATION DETAILS No. 2	RS6	478
OVERHEAD SIGNS (TRUSS)		
OVERHEAD SIGNS - WALKWAY DETAILS No. 1	S16	479
OVERHEAD SIGNS - WALKWAY DETAILS No. 2	S17	480
OVERHEAD SIGNS - WALKWAY SAFETY RAILING DETAILS	S18	481
OVERHEAD SIGNS - TRUSS - SIGN MOUNTING DETAILS - LAMINATED PANEL (TYPE A)	S19	482
OVERHEAD SIGNS - STEEL FRAMES - REMOVABLE SIGN PANEL FRAME	S20	483
OVERHEAD SIGNS - REMOVABLE SIGN PANEL FRAMES - MOUNTING DETAILS	S21	484
OVERHEAD SIGNS - TRUSS - REMOVABLE SIGN PANEL FRAMES - 110" AND 120" SIGN PANELS	S22	485
OVERHEAD SIGNS (TUBULAR)		
OVERHEAD SIGNS-TUBULAR - INSTRUCTIONS AND EXAMPLES	S30	486
OVERHEAD SIGNS-TUBULAR - SINGLE POST TYPE - LAYOUT AND PIPE SELECTION	S31	487
OVERHEAD SIGNS-TUBULAR - TWO POST TYPE - LAYOUT AND PIPE SELECTION	S32	488
OVERHEAD SIGNS-TUBULAR - STRUCTURAL FRAME - DETAILS No. 1	S33	489
OVERHEAD SIGNS-TUBULAR - STRUCTURAL FRAME - DETAILS No. 2	S34	490
OVERHEAD SIGNS-TUBULAR - SINGLE POST AND TWO POST TYPE - BASE PLATE AND ANCHORAGE DETAILS	S35	491
OVERHEAD SIGNS-TUBULAR - GUSSET PLATE DETAILS	S35A	492
OVERHEAD SIGNS-TUBULAR - SINGLE POST AND TWO POST TYPE - SQUARE PEDESTAL PILE FOUNDATION	S36	493
OVERHEAD SIGNS-TUBULAR - SINGLE POST AND TWO POST TYPE - ROUND PEDESTAL PILE FOUNDATION	S37	494
OVERHEAD SIGNS-TUBULAR - COMPRESSION STRUT DETAILS AT WALKWAY	S38	495
OVERHEAD SIGNS (LIGHTWEIGHT)		
OVERHEAD SIGNS-LIGHTWEIGHT - POST DETAILS	S48	496
OVERHEAD SIGNS-LIGHTWEIGHT - FOUNDATION DETAILS	S49	497
OVERHEAD SIGNS-LIGHTWEIGHT - EXTINGUISHABLE MESSAGE SIGN AND FLASHING BEACONS	S50	498
OVERHEAD AND ROADSIDE SIGN PANELS		
OVERHEAD LAMINATED SIGN - SINGLE OR MULTIPLE PANEL (TYPE A, 1" THICK)	S81	499
ROADSIDE LAMINATED SIGN - SINGLE OR MULTIPLE PANEL (TYPE B, 1" THICK)	S82	500
ROADSIDE LAMINATED SIGN - SINGLE OR MULTIPLE PANEL (TYPE B, 2½" THICK)	S83	501
ROADSIDE LAMINATED SIGN - SINGLE OR MULTIPLE PANEL (TYPE H, 2½" THICK)	S84	502
SEAM CLOSURE - "H" SECTION EXTRUSION AND POST SPACING TABLES (MULTI-HORIZONTAL LAMINATED PANEL ALUMINUM SIGNS)	S85	503
LAMINATED PANEL DETAILS (EXTRUSION FOR TYPES A, B, AND H PANELS)	S86	504
TYPE A-1 MOUNTING HARDWARE FOR OVERHEAD LAMINATED TYPE A PANEL (TRUSS AND LIGHTWEIGHT SIGN STRUCTURES)	S87	505

PLAN TITLE	PLAN No.	PAGE
OVERHEAD AND ROADSIDE SIGN PANELS (CONTINUED)		
TYPE A-2 MOUNTING HARDWARE FOR OVERHEAD LAMINATED TYPE A PANEL (BRIDGE MOUNTED AND TUBULAR SIGN STRUCTURES)	S88	506
ROADSIDE SIGN - FORMED SINGLE SHEET ALUMINUM PANEL	S89	507
CHANNEL AND BOLT HOLE LOCATION FOR OVERHEAD FORMED SIGN PANEL	S90	508
OVERHEAD SIGN - FORMED SIGN PANEL - TYPE A-3 MOUNTING HARDWARE	S91	509
OVERHEAD SIGN - FORMED SIGN PANEL	S92	510
FRAMING DETAILS FOR FRAMED SINGLE SHEET ALUMINUM SIGNS - RECTANGULAR SHAPE	S93	511
ROADSIDE FRAMED SINGLE SHEET ALUMINUM SIGNS - RECTANGULAR SHAPE	S94	512
ROADSIDE SINGLE SHEET ALUMINUM SIGNS - DIAMOND SHAPE	S95	513
OVERHEAD SIGNS - VERSATILE TRUSS		
OVERHEAD SIGNS-VERSATILE TRUSS - ONE AND TWO POST TYPE	S100	514
OVERHEAD SIGNS-VERSATILE TRUSS - ONE POST TYPE - TRUSS LAYOUT	S101	515
OVERHEAD SIGNS-VERSATILE TRUSS - ONE POST TYPE - STEEL POST TYPE AND TRUSS MEMBER TABLE	S102	516
OVERHEAD SIGNS-VERSATILE TRUSS - ONE POST TYPE - STEEL POST BASE PLATE AND ANCHORAGE DETAILS	S103	517
OVERHEAD SIGNS-VERSATILE TRUSS - ONE POST TYPE - CIDH PILE FOUNDATION DETAILS	S104	518
OVERHEAD SIGNS-VERSATILE TRUSS - ONE POST TYPE - CONCRETE PEDESTAL WITH CIDH PILE FOUNDATION DETAILS	S105	519
OVERHEAD SIGNS-VERSATILE TRUSS - TWO POST TYPE - TRUSS LAYOUT	S106	520
OVERHEAD SIGNS-VERSATILE TRUSS - TWO POST TYPE - STEEL POST TYPE AND TRUSS MEMBER TABLE	S107	521
OVERHEAD SIGNS-VERSATILE TRUSS - TWO POST TYPE - STEEL POST BASE PLATE AND ANCHORAGE DETAILS	S108	522
OVERHEAD SIGNS-VERSATILE TRUSS - TWO POST TYPE - CIDH PILE FOUNDATION DETAILS	S109	523
OVERHEAD SIGNS-VERSATILE TRUSS - TWO POST TYPE - CONCRETE PEDESTAL WITH CIDH PILE FOUNDATION DETAILS	S110	524
OVERHEAD SIGNS-VERSATILE TRUSS - TRUSS CONNECTION DETAILS	S111	525
OVERHEAD SIGNS-VERSATILE TRUSS - CHORD SPLICE DETAILS	S112	526
OVERHEAD SIGNS-VERSATILE TRUSS - TRUSS TO STEEL POST CONNECTION DETAILS	S113	527
OVERHEAD SIGNS-VERSATILE TRUSS - CIDH PILE FOUNDATION WITH INSPECTION PIPES	S114	528
OVERHEAD SIGNS-VERSATILE TRUSS - WALKWAY DETAILS No. 1	S115	529
OVERHEAD SIGNS-VERSATILE TRUSS - WALKWAY DETAILS No. 2	S116	530
OVERHEAD SIGNS-VERSATILE TRUSS - WALKWAY DETAILS No. 3	S117	531
OVERHEAD SIGNS-VERSATILE TRUSS - WALKWAY SAFETY RAILING DETAILS	S118	532
OVERHEAD SIGNS-VERSATILE TRUSS - SIGN MOUNTING DETAILS - LAMINATED PANEL (TYPE A)	S119	533
OVERHEAD SIGNS-VERSATILE TRUSS - REMOVABLE SIGN PANEL FRAMES DETAILS No. 1	S120	534
OVERHEAD SIGNS-VERSATILE TRUSS - REMOVABLE SIGN PANEL FRAMES DETAILS No. 2	S121	535

PLAN TITLE	PLAN No.	PAGE
OVERHEAD SIGNS - VERSATILE TRUSS (CONTINUED)		
OVERHEAD SIGNS-VERSATILE TRUSS - EXIT PLAQUE MOUNTING DETAILS	S122	536
OVERHEAD SIGNS-VERSATILE TRUSS - CMS MOUNTING DETAILS	S123	537
OVERHEAD SIGNS-VERSATILE TRUSS - ADDITIONAL DETAILS FOR CMS	S123B	538
OVERHEAD SIGNS-VERSATILE TRUSS - EMS AND FLASHING BEACON DETAILS	S124	539
ELECTRICAL SYSTEMS - LEGEND AND ABBREVIATIONS		
ELECTRICAL SYSTEMS (LEGEND)	ES-1A	540
ELECTRICAL SYSTEMS (LEGEND)	ES-1B	541
ELECTRICAL SYSTEMS (LEGEND)	ES-1C	542
ELECTRICAL SYSTEMS - SERVICE EQUIPMENT AND WIRING DIAGRAMS		
ELECTRICAL SYSTEMS (SERVICE EQUIPMENT)	ES-2A	543
ELECTRICAL SYSTEMS (SERVICE EQUIPMENT)	ES-2B	544
ELECTRICAL SYSTEMS (SERVICE EQUIPMENT ENCLOSURE AND TYPICAL WIRING DIAGRAM, TYPE III-A SERIES)	ES-2D	545
ELECTRICAL SYSTEMS (SERVICE EQUIPMENT ENCLOSURE AND TYPICAL WIRING DIAGRAM, TYPE III-B SERIES)	ES-2E	546
ELECTRICAL SYSTEMS (SERVICE EQUIPMENT ENCLOSURE AND TYPICAL WIRING DIAGRAM, TYPE III-C SERIES)	ES-2F	547
ELECTRICAL SYSTEMS (SERVICE EQUIPMENT ENCLOSURE AND TYPICAL WIRING DIAGRAM, TYPE III-D SERIES)	ES-2G	548
ELECTRICAL SYSTEMS - CONTROLLER CABINETS		
ELECTRICAL SYSTEMS (CONTROLLER CABINET ADAPTER, FOUNDATIONS AND PAD DETAILS)	ES-3B	549
ELECTRICAL SYSTEMS (CONTROLLER CABINET FOUNDATION AND PAD DETAILS)	ES-3C	550
ELECTRICAL SYSTEMS (CONTROLLER CABINET FOUNDATION AND PAD DETAILS)	ES-3C1	551
ELECTRICAL SYSTEMS (CONTROLLER CABINET FOUNDATION DETAILS)	ES-3C2	552
ELECTRICAL SYSTEMS - TELEPHONE DEMARCATION CABINETS		
ELECTRICAL SYSTEMS (TELEPHONE DEMARCATION CABINET, TYPE A)	ES-3D	553
ELECTRICAL SYSTEMS (TELEPHONE DEMARCATION CABINET, TYPE B)	ES-3E	554
ELECTRICAL SYSTEMS (TELEPHONE DEMARCATION CABINET, TYPE C)	ES-3F	555
ELECTRICAL SYSTEMS (TELEPHONE DEMARCATION CABINET, TYPE C DETAILS)	ES-3G	556
ELECTRICAL SYSTEMS - IRRIGATION CONTROLLER ENCLOSURE CABINET		
ELECTRICAL SYSTEMS (IRRIGATION CONTROLLER ENCLOSURE CABINET)	ES-3H	557
ELECTRICAL SYSTEMS - ELECTRONICS ASSEMBLY CONNECTION DIAGRAM		
ELECTRICAL SYSTEMS (ELECTRONICS ASSEMBLY CONNECTION DIAGRAM) (BATTERY BACKUP SYSTEM)	ES-3K	558

PLAN TITLE | PLAN No. | PAGE

ELECTRICAL SYSTEMS - SIGNAL HEADS, SIGNAL FACES, AND MOUNTINGS

ELECTRICAL SYSTEMS (SIGNAL HEAD MOUNTING) ES-4A 559
ELECTRICAL SYSTEMS (PEDESTRIAN SIGNAL HEADS) ES-4B 560
ELECTRICAL SYSTEMS (SIGNAL HEADS AND MOUNTINGS) ES-4C 561
ELECTRICAL SYSTEMS (SIGNAL HEAD MOUNTING) ES-4D 562
ELECTRICAL SYSTEMS (SIGNAL HEADS) ES-4E 563

ELECTRICAL SYSTEMS - DETECTORS

ELECTRICAL SYSTEMS (LOOP DETECTORS) ES-5A 564
ELECTRICAL SYSTEMS (DETECTORS) ES-5B 565
ELECTRICAL SYSTEMS (ACCESSIBLE PEDESTRIAN SIGNAL
AND PUSH BUTTON ASSEMBLIES) ES-5C 566
ELECTRICAL SYSTEMS (CURB AND SHOULDER TERMINATION, TRENCH,
AND HANDHOLE DETAILS) ES-5D 567
ELECTRICAL SYSTEMS (TRENCH IN PAVEMENT AND
PIEZOELECTRIC AXLE SENSOR DETAILS) ES-5E 568

ELECTRICAL SYSTEMS - LIGHTING STANDARDS

ELECTRICAL SYSTEMS (LIGHTING STANDARD, TYPES 15 AND 21) ES-6A 569
ELECTRICAL SYSTEMS (ELECTROLIER ANCHORAGE AND GROUTING
FOR TYPES 15 AND 21, BARRIER RAIL MOUNTED) ES-6B 570
ELECTRICAL SYSTEMS (LIGHTING STANDARD, TYPES 5 AND 10,
OVERHEAD SIGN MOUNTED) ES-6C 571
ELECTRICAL SYSTEMS (LIGHTING STANDARD, TYPES 15D AND 21D,
DOUBLE LUMINAIRE MAST ARM) ES-6D 572
ELECTRICAL SYSTEMS (LIGHTING STANDARD, TYPES 30 AND 31) ES-6E 573
ELECTRICAL SYSTEMS (LIGHTING STANDARD, SLIP BASE PLATE) ES-6F 574
ELECTRICAL SYSTEMS (LIGHTING STANDARD, TYPE 32) ES-6G 575

ELECTRICAL SYSTEMS – SIGNAL AND LIGHTING STANDARD, TYPE TS, AND TYPE 2 POST

ELECTRICAL SYSTEMS (SIGNAL AND LIGHTING STANDARD, TYPE TS,
AND TYPE 2 POST) ES-7A 576

ELECTRICAL SYSTEMS - SIGNAL AND LIGHTING STANDARDS

ELECTRICAL SYSTEMS (SIGNAL AND LIGHTING STANDARD, TYPE 1
AND EQUIPMENT IDENTIFICATION CHARACTERS) ES-7B 577
ELECTRICAL SYSTEMS (SIGNAL AND LIGHTING STANDARD, CASE 1
SIGNAL MAST ARM LOADING, WIND VELOCITY = 100 MPH
AND SIGNAL MAST ARM LENGTHS 15' TO 30') ES-7C 578
ELECTRICAL SYSTEMS (SIGNAL AND LIGHTING STANDARD, CASE 2
SIGNAL MAST ARM LOADING, WIND VELOCITY = 100 MPH
AND SIGNAL MAST ARM LENGTHS 15' TO 30') ES-7D 579
ELECTRICAL SYSTEMS (SIGNAL AND LIGHTING STANDARD, CASE 3
SIGNAL MAST ARM LOADING, WIND VELOCITY = 100 MPH
AND SIGNAL MAST ARM LENGTHS 15' TO 45') ES-7E 580

PLAN TITLE | PLAN No. | PAGE

ELECTRICAL SYSTEMS - SIGNAL AND LIGHTING STANDARDS (CONTINUED)

ELECTRICAL SYSTEMS (SIGNAL AND LIGHTING STANDARD, CASE 4 SIGNAL MAST ARM LOADING, WIND VELOCITY = 100 MPH AND SIGNAL MAST ARM LENGTHS 25' TO 45') ES-7F 581
ELECTRICAL SYSTEMS (SIGNAL AND LIGHTING STANDARD, CASE 5 SIGNAL MAST ARM LOADING, WIND VELOCITY = 100 MPH AND SIGNAL MAST ARM LENGTHS 50' TO 55') ES-7G 582
ELECTRICAL SYSTEMS (SIGNAL AND LIGHTING STANDARD, CASE 5 SIGNAL MAST ARM LOADING, WIND VELOCITY = 100 MPH AND SIGNAL MAST ARM LENGTHS 60' TO 65') ES-7H 583

ELECTRICAL SYSTEMS - FLASHING BEACONS

ELECTRICAL SYSTEMS (FLASHING BEACON ON A TYPE 1, TYPE 15-FBS, AND TYPE 40 STANDARD) ES-7J 584
ELECTRICAL SYSTEMS (FLASHING BEACON WITH TYPE 9, 9A, AND 9B SIGN) ES-7K 585
ELECTRICAL SYSTEMS (FLASHING BEACON WITH TYPE 9, 9A, AND 9B SIGN) ES-7L 586

ELECTRICAL SYSTEMS - SIGNAL AND LIGHTING STANDARD DETAILS

ELECTRICAL SYSTEMS (SIGNAL AND LIGHTING STANDARD, DETAILS No. 1) ES-7M 587
ELECTRICAL SYSTEMS (SIGNAL AND LIGHTING STANDARD, DETAILS No. 2) ES-7N 588
ELECTRICAL SYSTEMS (SIGNAL AND LIGHTING STANDARD, DETAILS No. 3) ES-7O 589

ELECTRICAL SYSTEMS - PEDESTRIAN BARRICADES

ELECTRICAL SYSTEMS (PEDESTRIAN BARRICADES) ES-7Q 590

ELECTRICAL SYSTEMS - SIGNAL AND LIGHTING ATTACHMENTS

ELECTRICAL SYSTEMS (SIGNAL AND LIGHTING ATTACHMENTS) ES-7R 591

ELECTRICAL SYSTEMS - PULL BOX

ELECTRICAL SYSTEMS (NON-TRAFFIC PULL BOX) ES-8A 592
ELECTRICAL SYSTEMS (TRAFFIC PULL BOX) ES-8B 593
ELECTRICAL SYSTEMS (VAULTS) ES-8C 594
ELECTRICAL SYSTEMS (VAULTS) ES-8D 595

ELECTRICAL SYSTEMS - STRUCTURE INSTALLATIONS

ELECTRICAL SYSTEMS (STRUCTURE PULL BOX INSTALLATIONS) ES-9A 596
ELECTRICAL SYSTEMS (CONDUIT RISER EXPANSION AND DEFLECTION FITTINGS, STRUCTURE INSTALLATIONS) ES-9B 597
ELECTRICAL SYSTEMS (STRUCTURE PULL BOX) ES-9C 598
ELECTRICAL SYSTEMS (STRUCTURE PULL BOX INSTALLATIONS) ES-9D 599
ELECTRICAL SYSTEMS (FLUSH-MOUNTED SOFFIT, PENDANT SOFFIT AND WALL-MOUNTED LUMINAIRE, STRUCTURE INSTALLATIONS) ES-9E 600
ELECTRICAL SYSTEMS (FLUSH-MOUNTED SOFFIT LUMINAIRE DETAILS) ES-9F 601

PLAN TITLE | PLAN No. | PAGE

ELECTRICAL SYSTEMS - ISOFOOTCANDLE CURVES AND FOUNDATION DETAILS

ELECTRICAL SYSTEMS (ISOFOOTCANDLE CURVES) ES-10B 602
ELECTRICAL SYSTEMS (FOUNDATION INSTALLATIONS) ES-11 603

ELECTRICAL SYSTEMS - SPLICE INSULATION METHODS, KINKING AND BANDING DETAILS

ELECTRICAL SYSTEMS (SPLICE INSULATION METHODS DETAILS) ES-13A 604
ELECTRICAL SYSTEMS (KINKING AND BANDING DETAIL) ES-13B 605

ELECTRICAL SYSTEMS - EXTINGUISHABLE MESSAGE SIGN

ELECTRICAL SYSTEMS (EXTINGUISHABLE MESSAGE SIGN 10" LETTERS) ES-14A 606
ELECTRICAL SYSTEMS (EMS AND FBE WIRING DIAGRAMS) ES-14B 607
ELECTRICAL SYSTEMS (EXTINGUISHABLE MESSAGE SIGN ON A FULL CANTILEVER) ES-14C 608

ELECTRICAL SYSTEMS - SIGN ILLUMINATION EQUIPMENT AND CONTROLS

ELECTRICAL SYSTEMS (SIGN ILLUMINATION EQUIPMENT) ES-15A 609
ELECTRICAL SYSTEMS (SIGN ILLUMINATION EQUIPMENT) ES-15C 610
ELECTRICAL SYSTEMS (LIGHTING AND SIGN ILLUMINATION CONTROL) ES-15D 611

ELECTRICAL SYSTEMS – CAMERA AND VEHICLE DETECTION SYSTEM POLES

ELECTRICAL SYSTEMS (CAMERA POLE 5' TO 15' OVERHEAD SIGN MOUNTED) ES-16A 612
ELECTRICAL SYSTEMS (CAMERA POLE 25' TO 45') ES-16B 613
ELECTRICAL SYSTEMS (HIGH MAST CAMERA POLE 50' TO 90') ES-16C 614
ELECTRICAL SYSTEMS (VEHICLE DETECTION SYSTEM POLE 30' TO 40') ES-16D 615

ELECTRICAL SYSTEMS - FIBER OPTIC DETAILS

ELECTRICAL SYSTEMS (FIBER OPTIC MARKER DETAILS) ES-17A 616

TEMPORARY WOOD POLES

TEMPORARY WOOD POLES - GENERAL NOTES ES-18A 617
TEMPORARY WOOD POLES - NON-GUYED - NO SIGNALS ON SPANS ES-18B 618
TEMPORARY WOOD POLES - GUYED - NO SIGNALS ON SPANS ES-18C 619
TEMPORARY WOOD POLES - GUYED - WITH SIGNAL FACES ON SPANS ES-18D 620
TEMPORARY WOOD POLES - NON-GUYED - WITH SIGNAL FACES ON SPAN ES-18E 621
TEMPORARY WOOD POLES - DETAILS No. 1 ..... ES-19A 622
TEMPORARY WOOD POLES - DETAILS No. 2 ..... ES-19B 623
TEMPORARY WOOD POLES - DETAILS No. 3 ..... ES-19C 624
TEMPORARY WOOD POLES - DETAILS No. 4 ..... ES-19D 625
TEMPORARY WOOD POLES - DETAILS No. 5 ..... ES-19E 626

A

AB	AGGREGATE BASE
ABBC	ASBESTOS BONDED BITUMINOUS COATED
ABM	AIR-BLOWN MORTAR
Abn	ABANDON
ABS	ACRYLONITRILE-BUTADIENE-STYRENE
Abut	ABUTMENT
AC	ASPHALT CONCRETE
AC+	UNGROUNDED CONDUCTOR
ACB	ASPHALT CONCRETE BASE
ACC	ARMOR-CLAD CONDUCTORS
ACP	ASBESTOS CEMENT PIPE
Adj	ADJUST, ADJUSTABLE, ADJACENT
ADL	ADDED DEAD LOAD
ADT	AVERAGE DAILY TRAFFIC
AFES	ALTERNATIVE FLARED END SECTION
AGT	APPROACH GUARDRAIL TRANSITION
Ahd	AHEAD
AIC	AUXILIARY IRRIGATION CONTROLLER
Alt	ALTERNATE, ALTERNATIVE
AM	TIME FROM MIDNIGHT TO NOON
Amend	AMENDMENT
AP	ALTERNATIVE PIPE
APC	ALTERNATIVE PIPE CULVERT
Approx	APPROXIMATE
APS	ACCESSIBLE PEDESTRIAN SIGNAL
APU	ALTERNATIVE PIPE UNDERDRAIN
ARS	ACCELERATION RESPONSE SPECTRUM
ARV	AIR RELEASE VALVE
AS	AGGREGATE SUBBASE
ASP	ALTERNATIVE SLOTTED PIPE
ASRP	ALUMINUM SPIRAL RIB PIPE
Assy	ASSEMBLY
ATPB	ASPHALT TREATED PERMEABLE BASE
ATPM	ASPHALT TREATED PERMEABLE MATERIAL
Auto	AUTOMATIC
Aux	AUXILIARY
AVB	ATMOSPHERIC VACUUM BREAKER
Ave	AVENUE
Avg	AVERAGE

B

B & B	BALLED AND BURLAPPED
BAGR	BRIDGE APPROACH GUARD RAILING
Batt	BATTERY
BB	BEGINNING OF BRIDGE
B/B	BRASS/BRONZE
B/B/Pl	BRASS/BRONZE/PLASTIC
B-B	BACK-TO-BACK
BBS	BATTERY BACKUP SYSTEM
BC	BEGIN HORIZONTAL CURVE, BOLT CIRCLE
BCR	BEGIN CURB RETURN
Beg	BEGIN
BFM	BONDED FIBER MATRIX
Bit Ctd	BITUMINOUS COATED
Bk	BACK
Bkf	BACKFILL
Bldg	BUILDING
Blk	BLACK
BLM	BRIDGE-LOG MILE
Blvd	BOULEVARD
BM	BENCH MARK
BMP	BEST MANAGEMENT PRACTICE
Bot	BOTTOM

B continued

BP	BOOSTER PUMP, BYPASS
BPA	BACKFLOW PREVENTER ASSEMBLY
BPB	BICYCLE PUSH BUTTON
BPE	BACKFLOW PREVENTER ENCLOSURE
B/Pl	BRASS/PLASTIC
Br	BRIDGE
Brg	BEARING
BTU	BRITISH THERMAL UNIT
BV	BALL VALVE
BVC	BEGIN VERTICAL CURVE
BW	BARBED WIRE

C

C	CONDUIT, CHANNEL (STRUCTURAL STEEL SHAPE)
CAA	CABLE ANCHOR ASSEMBLY
CAP	CORRUGATED ALUMINUM PIPE
CAPA	CORRUGATED ALUMINUM PIPE ARCH
CARV	COMBINATION AIR RELEASE VALVE
CAS	CONSTRUCTION AREA SIGN
Cat6	CATEGORY 6 AUGMENTED CABLE
CB	CONCRETE BARRIER, CIRCUIT BREAKER, COUPLING BAND, COMPOST BERM
CBW	CONCRETE BLOCK WALL
C-C	CENTER TO CENTER
CCA	CAM COUPLER ASSEMBLY
CCTV	CLOSED CIRCUIT TELEVISION
CEC	CONTROLLER ENCLOSURE CABINET
CG	CENTER OF GRAVITY
CHDPE	CORRUGATED HIGH DENSITY POLYETHYLENE
Chnl	CHANNEL
CI	CAST IRON
CIDH	CAST-IN-DRILLED-HOLE
CIP	CAST-IN-PLACE, CAST IRON PIPE
CIPCP	CAST IN PLACE CONCRETE PIPE
CISS	CAST-IN-STEEL-SHELL
CJP	COMPLETE JOINT PENETRATION
Ckt	CIRCUIT
CL	CHAIN LINK
CL-6	CHAIN LINK FENCE (6 FT)
Cl	CLASS
Clr	CLEAR, CLEARANCE
CM	CENTER MARGIN LIGHT
CMP	CORRUGATED METAL PIPE
CMS	CHANGEABLE MESSAGE SIGN
CNC	CONTROL AND NEUTRAL CONDUCTORS
Cntl	CONTROL
Co	COUNTY
Col	COLUMN
Comm	COMMUNICATION
Conc	CONCRETE
Conn	CONNECTOR
Const	CONSTRUCT, CONSTRUCTION
Cont	CONTINUOUS
Coord	COORDINATE
CP	CANDLEPOWER, CATCH POINT, COPPER PIPE
Cr	CREEK
CRCP	CONTINUOUSLY REINFORCED CONCRETE PAVEMENT

C continued

CRSP	CONCRETED ROCK SLOPE PROTECTION
CS	COMPOST SOCK, COUNT STATION
CSC	CONDUCTOR SIGNAL CABLE
CSP	CORRUGATED STEEL PIPE
CSPA	CORRUGATED STEEL PIPE ARCH
CST	CENTER STRIP
Ct	COURT
CTB	CEMENT TREATED BASE
CTID	CALTRANS IDENTIFICATION
CTPB	CEMENT TREATED PERMEABLE BASE
CTPM	CEMENT TREATED PERMEABLE MATERIAL
Ctrs	CENTERS
Culv	CULVERT
CV	CHECK VALVE

D

D	DEPTH, DIRECTION (IN PERCENT) OF HEAVIER TRAFFIC FLOW
Dbl	DOUBLE
DD	DOWNDRAIN
Deg	DEGREE
Del	DELINEATOR
Det	DETAIL, DETOUR
DF	DOUGLAS FIR
DG	DECOMPOSED GRANITE
DHV	DESIGN HOURLY VOLUME
DI	DRAINAGE INLET, DROP INLET
Dia	DIAMETER
Diaph	DIAPHRAGM
DIP	DUCTILE IRON PIPE
Dist	DISTANCE, DISTRICT
DIT	DRIP IRRIGATION TUBING
DLC	LOOP DETECTOR LEAD-IN CABLE
DMBB	DOUBLE METAL BEAM BARRIER
DN	DIAMETER NOMINAL
Dr	DRIVE
DTBB	DOUBLE THRIE BEAM BARRIER
DVA	DRIP VALVE ASSEMBLY
Dwy	DRIVEWAY

E

E	EAST
Ease	EASEMENT
EB	END OF BRIDGE, EASTBOUND
EC	END HORIZONTAL CURVE, EROSION CONTROL
ECR	END CURB RETURN
ECTC	EROSION CONTROL TECHNOLOGY COUNCIL
ED	EDGE DRAIN
EDC	EDGE DRAIN CLEANOUT
EDO	EDGE DRAIN OUTLET
EDV	EDGE DRAIN VENT
Elec	ELECTROLIER
Elect	ELECTRIC, ELECTRICAL
Elev	ELEVATION
Ell	ELBOW
Emb	EMBANKMENT
EMS	EXTINGUISHABLE MESSAGE SIGN
Encl	ENCLOSURE

E continued

Engr	ENGINEER
EOD	EDGE OF DECK
EP	EDGE OF PAVEMENT
Eq	EQUATION
ERS	EARTH RETAINING STRUCTURE
ES	EDGE OF SHOULDER
ES-1	ETHERNET SWITCH TYPE 1
ES-2	ETHERNET SWITCH TYPE 2
ESA	ENVIRONMENTALLY SENSITIVE AREA
ESAL	EQUIVALENT SINGLE AXLE LOADS
EST	END STRIP
Estb	ESTABLISHMENT
ETW	EDGE OF TRAVELED WAY
EVC	END VERTICAL CURVE
EVUC	EMERGENCY VEHICLE UNIT CABLE
EVUD	EMERGENCY VEHICLE UNIT DETECTOR
EW	ENDWALL
Exc	EXCAVATION
Exist	EXISTING
Exp	EXPANSION
Exp Jt	EXPANSION JOINT
Ext	EXTERIOR
Exwy	EXPRESSWAY

F

F	FILL, FULL CIRCLE
F & C	FRAME AND COVER
F & G	FRAME AND GRATE
FB	FLOOR BEAM, FLASHING BEACON
FBE	FLASHING BEACON ENCLOSURE
FBS	FLASHING BEACON WITH SLIP BASE
FCV	FLOW CONTROL VALVE
Fdn	FOUNDATION
FDU	FIBER DISTRIBUTION UNIT
FEBT	FACING EASTBOUND TRAFFIC
Fert	FERTILIZER
FES	FLARED END SECTION
FF	FILTER FABRIC
FG	FINISH GRADE
FH	FIRE HYDRANT, FLEXIBLE HOSE
Fig	FIGURE
FIPT	FEMALE IRON PIPE THREAD
FIS	FERTILIZER INJECTOR SYSTEM
FL	FLOW LINE
FNBT	FACING NORTHBOUND TRAFFIC
FO	FIBER OPTIC
FOB	FREE ON BOARD
FOC	FACE OF CONCRETE, FIBER OPTIC CABLE
FOSE	FIBER OPTIC SPLICE ENCLOSURE
F/P	FULL/PART CIRCLE
FR	FIBER ROLL
Fr Rd	FRONTAGE ROAD
FS	FAR SIDE, FINISHED SURFACE, FLOW SENSOR
FSBT	FACING SOUTHBOUND TRAFFIC
FSC	FLOW SENSOR CABLE
Ftg	FOOTING
FV	FLUSH VALVE
FWBT	FACING WESTBOUND TRAFFIC
Fwy	FREEWAY

Dist	COUNTY	ROUTE	POST MILES TOTAL PROJECT	SHEET No.	TOTAL SHEETS

Davinder Minhas
REGISTERED CIVIL ENGINEER

September 18, 2026
PLANS APPROVAL DATE

REGISTERED PROFESSIONAL ENGINEER
Davinder Minhas
No. C70022
Exp. 9-30-26
CIVIL
STATE OF CALIFORNIA

THE STATE OF CALIFORNIA OR ITS OFFICERS OR AGENTS SHALL NOT BE RESPONSIBLE FOR THE ACCURACY OR COMPLETENESS OF SCANNED COPIES OF THIS PLAN SHEET.

GENERAL RULES:

1. Words are preferred over abbreviations and acronyms.
2. Use words in notes, except where space is limited on the plan sheet.
3. Do not use abbreviations or acronyms where the meaning may be in doubt.
4. Abbreviations and acronyms may be used in callouts, dimensions, and tables.
5. Use upper and lower case letters for abbreviation of a single word.
   e.g., Misc = miscellaneous
   and Bit Ctd = bituminous coated
6. Use all upper case letters for acronyms.
   e.g., BCR = begin curb return

UNITS OF MEASUREMENT:

1. See Tables A, B, and C on Standard Plan A3C.
2. Units of measurement are not part of abbreviations and acronyms. The above abbreviation and acronym general rules do not apply.

SYMBOLS:

1. See Table D on Standard Plan A3C.

SLOPES, FLARES, AND TAPERS:

1. Side slopes:
   X:Y - horizontal:vertical
2. Flares and tapers:
   X:Y - longitudinal:lateral

STATE OF CALIFORNIA
DEPARTMENT OF TRANSPORTATION

ABBREVIATIONS (SHEET 1 OF 3)

A3A

2026 STANDARD PLAN A3A

7-1-26

Return to Table of Contents

G

G	GROOVE, EQUIPMENT GROUNDING CONDUCTOR
g	ACCELERATION DUE TO GRAVITY
Ga	GAUGE
Galv	GALVANIZED
GARV	GARDEN VALVE
GARVA	GARDEN VALVE ASSEMBLY
GB	GROUND BUS
GFCI	GROUND FAULT CIRCUIT INTERRUPTER
GM	GRAVEL MULCH
GP	GRADING PLANE
GPH	GALLONS PER HOUR
GPM	GALLONS PER MINUTE
GR	GUARD RAILING
Grn	GREEN
GSP	GALVANIZED STEEL PIPE
Gtr	GUTTER
GV	GATE VALVE

H

H	HEIGHT, HALF CIRCLE
HAR	HIGHWAY ADVISORY RADIO
h, hr	HOUR
HD	HORIZONTAL DRAIN
HDPE	HIGH DENSITY POLYETHYLENE
hdwl	HEADWALL
Hex	HEXAGONAL
Hex Hd	HEXAGONAL HEAD
HMA	HOT MIX ASPHALT
Horiz	HORIZONTAL
HOV	HIGH OCCUPANCY VEHICLE
HP	HINGE POINT, HORSEPOWER
HPL	HIGH PRESSURE LINE
HPS	HIGH PERFORMANCE STEEL, HIGH PRESSURE SODIUM
HS	HIGH STRENGTH
HSS	HOLLOW STRUCTURAL SECTION
HW	HEADWALL, HIGH WATER
HWM	HIGH WATER MARK
Hwy	HIGHWAY

I

IB	IMPORTED BORROW
IC	IRRIGATION CONTROLLER
ICC	IRRIGATION CONTROLLER(S) IN CONTROLLER ENCLOSURE CABINET
ID	INSIDE DIAMETER
IF	INSIDE FACE
IFS	IRRIGATION FILTRATION SYSTEM
IISNS	INTERNALLY ILLUMINATED STREET NAME SIGN
Int	INTERIOR
Inv	INVERT
IP	INTERNET PROTOCOL
IPS	IRON PIPE SIZE
IPT	IRON PIPE THREAD
Irr	IRRIGATION
ISL	INDUCTION SIGN LIGHTING

J

Jct	JUNCTION
JP	JOINT POLE
JPCP	JOINTED PLAIN CONCRETE PAVEMENT
JS	JUNCTION STRUCTURE
Jt	JOINT

K

L

L	LENGTH, ANGLE (STRUCTURAL STEEL SHAPE)
Lat	LATITUDE
LCB	LEAN CONCRETE BASE
LED	LIGHT EMITTING DIODE
LMA	LUMINAIRE MAST ARM
Ln	LANE
Loc	LOCATION
LOL	LAYOUT LINE
Long	LONGITUDE
Longit	LONGITUDINAL
LPS	LOW PRESSURE SODIUM
LS	LUMP SUM
Lt	LEFT
Ltg	LIGHTING
Lum	LUMINAIRE

M

M	METERED
Maint	MAINTENANCE
MAS	MAST ARM MOUNTING SIDE ATTACHMENT
MAT	MAST ARM MOUNTING TOP ATTACHMENT
Max	MAXIMUM
MB	METAL BEAM
MBB	METAL BEAM BARRIER
MBGR	METAL BEAM GUARD RAILING
MBPS	MANUAL BYPASS SWITCH
MCV	MANUAL CONTROL VALVE
Med	MEDIAN
MGS	MIDWEST GUARDRAIL SYSTEM
MH	MANHOLE
MIC	MASTER IRRIGATION CONTROLLER
Min	MINIMUM
MIPT	MALE IRON PIPE THREAD
Misc	MISCELLANEOUS
Misc I & S	MISCELLANEOUS IRON AND STEEL
Mkr	MARKER
M/M	MULTIPLE TO MULTIPLE TRANSFORMER
Mod	MODIFIED, MODIFY
Mon	MONUMENT
MP	METAL PLATE
MPGR	METAL PLATE GUARD RAILING
MR	MOVEMENT RANGE
MRS	MICROWAVE RADAR SYSTEM
MSE	MECHANICALLY STABILIZED EMBANKMENT
Mt	MOUNTAIN, MOUNT
Mtg	MOUNTING
Mtl	MATERIAL
MV	MERCURY VAPOR LIGHTING FIXTURE
MVDS	MICROWAVE VEHICLE DETECTION SYSTEM
MVP	MAINTENANCE VEHICLE PULLOUT

N

N	NORTH, NEUTRAL (GROUNDED CONDUCTOR)
NB	NORTHBOUND, NEUTRAL BUS
NC	NORMALLY CLOSE

N continued

NCN	NO COMMON NAME
NL	NOZZLE LINE
NO	NORMALLY OPEN
No.	NUMBER (MUST HAVE PERIOD)
Nos.	NUMBERS (MUST HAVE PERIOD)
NPS	NOMINAL PIPE SIZE
NPT	NATIONAL PIPE THREAD
NS	NEAR SIDE
NTS	NOT TO SCALE

O

Oblr	OBLITERATE
OC	OVERCROSSING
O/C	ON CENTER
OD	OUTSIDE DIAMETER
OF	OUTSIDE FACE
OG	ORIGINAL GROUND
OGAC	OPEN GRADED ASPHALT CONCRETE
OGFC	OPEN GRADED FRICTION COURSE
OH	OVERHEAD
OHWM	ORDINARY HIGH WATER MARK
OL	OVERLAP
O-O	OUT TO OUT
Opp	OPPOSITE
OSD	OVERSIDE DRAIN

P

P	PAGE, PITCH, PART CIRCLE, NUMBER OF POLES FOR A CIRCUIT BREAKER
PAP	PERFORATED ALUMINUM PIPE
PB	PULL BOX
PBA	PUSH BUTTON ASSEMBLY
PC	POINT OF CURVATURE, PRECAST
PCC	POINT OF COMPOUND CURVE, PORTLAND CEMENT CONCRETE
PCMS	PORTABLE CHANGEABLE MESSAGE SIGN
PCP	PERFORATED CONCRETE PIPE, PRESTRESSED CONCRETE PIPE
PCVC	POINT OF COMPOUND VERTICAL CURVE
PDA	POWER DISTRIBUTION ASSEMBLY
PE	POLYETHYLENE
PEC	PERMIT TO ENTER AND CONSTRUCT, PHOTOELECTRIC CONTROL
Ped	PEDESTRIAN
Perm Mtl	PERMEABLE MATERIAL
PEU	PHOTOELECTRIC UNIT
PG	PROFILE GRADE
PI	POINT OF INTERSECTION
PJP	PARTIAL JOINT PENETRATION
Pkt	PACKET
Pkwy	PARKWAY
PL	PLATE
Pl	PLASTIC
P/L	PROPERTY LINE
PLS	PURE LIVE SEED
Plt	PLANT, PLANTING
Plt Estb	PLANT ESTABLISHMENT

P continued

PM	POST MILE, TIME FROM NOON TO MIDNIGHT
PN	PAVING NOTCH
POC	POINT OF HORIZONTAL CURVE, PEDESTRIAN OVERCROSSING
POE	POWER OVER ETHERNET
POT	POINT OF TANGENT
POVC	POINT OF VERTICAL CURVE
PP	PIPE PILE, PLASTIC PIPE, POWER POLE
PPL	PREFORMED PERMEABLE LINER
PPP	PERFORATED PLASTIC PIPE
PR	PRESSURE RATED
PRC	POINT OF REVERSE CURVE
PRF	PAVEMENT REINFORCING FABRIC
PRLV	PRESSURE RELIEF VALVE
PRV	PRESSURE REGULATING VALVE
PRVC	POINT OF REVERSE VERTICAL CURVE
PS&E	PLANS, SPECIFICATIONS AND ESTIMATES
PS	PRESTRESSED
P/S	PRESTRESSED
PSP	PERFORATED STEEL PIPE
PT	POINT OF TANGENCY, CONDUIT WITH PULL TAPE
PTR	POWER TRANSFER RELAY
PUC	PEDESTRIAN UNDERCROSSING
PVC	POLYVINYL CHLORIDE
Pvmt	PAVEMENT

Q

Q	QUARTER CIRCLE
QCV	QUICK COUPLING VALVE
Qty	QUANTITY

R

R	RADIUS
R & D	REMOVE AND DISPOSE
R & S	REMOVE AND SALVAGE
R/C	RATE OF CHANGE
RCA	REINFORCED CONCRETE ARCH
RCB	REINFORCED CONCRETE BOX
RCP	REINFORCED CONCRETE PIPE
RCPA	REINFORCED CONCRETE PIPE ARCH
RCV	REMOTE CONTROL VALVE
RCVM	REMOTE CONTROL VALVE (MASTER)
RCVMF	REMOTE CONTROL VALVE (MASTER) W/FLOW SENSOR
RCVP	REMOTE CONTROL VALVE W/PRESSURE REGULATOR
RCW	RECYCLED WATER
Rd	ROAD
Rdwy	ROADWAY
RE	RELOCATED EQUIPMENT
RECP	ROLLED EROSION CONTROL PRODUCT
Reinf	REINFORCED, REINFORCEMENT, REINFORCING

Dist	COUNTY	ROUTE	POST MILES TOTAL PROJECT	SHEET No.	TOTAL SHEETS

Davinder Minhas
REGISTERED CIVIL ENGINEER

September 18, 2026
PLANS APPROVAL DATE

REGISTERED PROFESSIONAL ENGINEER
Davinder Minhas
No. C70022
Exp. 9-30-26
CIVIL
STATE OF CALIFORNIA

THE STATE OF CALIFORNIA OR ITS OFFICERS OR AGENTS SHALL NOT BE RESPONSIBLE FOR THE ACCURACY OR COMPLETENESS OF SCANNED COPIES OF THIS PLAN SHEET.

STATE OF CALIFORNIA
DEPARTMENT OF TRANSPORTATION

ABBREVIATIONS (SHEET 2 OF 3)

A3B

2026 STANDARD PLAN A3B

7-1-26

Return to Table of Contents

Dist	COUNTY	ROUTE	POST MILES TOTAL PROJECT	SHEET No.	TOTAL SHEETS

Davinder Minhas
REGISTERED CIVIL ENGINEER

September 18, 2026
PLANS APPROVAL DATE

REGISTERED PROFESSIONAL ENGINEER
Davinder Minhas
No. C70022
Exp. 9-30-26
CIVIL
STATE OF CALIFORNIA

THE STATE OF CALIFORNIA OR ITS OFFICERS OR AGENTS SHALL NOT BE RESPONSIBLE FOR THE ACCURACY OR COMPLETENESS OF SCANNED COPIES OF THIS PLAN SHEET.

R continued

Rel	RELOCATE
Repl	REPLACEMENT
Req	REQUIRED
Ret	RETAINING
Rev	REVISED,
	REVISION
RHMA	RUBBERIZED HOT MIX ASPHALT
RICS	REMOTE IRRIGATION CONTROL SYSTEM
Riv	RIVER
RM	ROAD-MIXED,
	RAMP METERING
RP	RADIUS POINT,
	REFERENCE POINT
RPU	REMOTE PROCESSING UNIT
RR	RAILROAD
RRFB	RECTANGULAR RAPID FLASHING BEACON
RSP	ROCK SLOPE PROTECTION,
	REVISED STANDARD PLAN
Rt	RIGHT
Rte	ROUTE
RW	REDWOOD,
	RETAINING WALL
R/W	RIGHT OF WAY
RWIS	ROADSIDE WEATHER INFORMATION SYSTEM
Rwy	RAILWAY

S

S	SOUTH,
	SLIP,
	SUPPLEMENT
SAE	STRUCTURE APPROACH EMBANKMENT
Salv	SALVAGE
SAPP	STRUCTURAL ALUMINUM PLATE PIPE
SB	SOUTHBOUND,
	SLIP BASE
SC	SAND CUSHION
S/C	SAW CUT LINE
Sch	SCHEDULE
SCSP	SLOTTED CORRUGATED STEEL PIPE
SD	STORM DRAIN
Sec	SECOND,
	SECTION
Sep	SEPARATION
SG	SUBGRADE
Shld	SHOULDER
Sht	SHEET
SIC	SIGNAL INTERCONNECT CABLE
Sig	SIGNAL
Sim	SIMILAR
SLI	SENSOR LEAD-IN CABLE
SM	SELECTED MATERIAL
SMA	SIGNAL MAST ARM
SMFO	SINGLE MODE FIBER OPTIC
SNS	STREET NAME SIGN
SP	STAND PIPE,
	SERVICE POINT
Spec	SPECIAL,
	SPECIFICATION(S)
SPP	SLOTTED PLASTIC PIPE

S continued

Sq	SQUARE
SS	SLOPE STAKE
SSBM	STRAP AND SADDLE BRACKET METHOD
SSD	STRUCTURAL SECTION DRAIN
SSPA	STRUCTURAL STEEL PLATE ARCH
SSPP	STRUCTURAL STEEL PLATE PIPE
SSPPA	STRUCTURAL STEEL PLATE PIPE ARCH
SSRP	STEEL SPIRAL RIB PIPE
SST	SIDE STRIP
St	STREET
Sta	STATION
STBB	SINGLE THRIE BEAM BARRIER
STC	SENSOR TRANSMISSION CABLE
Std	STANDARD
Str	STRUCTURE
Surf	SURFACING
SV	SPLICE VAULT
SW	SIDEWALK,
	SOUND WALL
Swr	SEWER
Sym	SYMMETRICAL
S4S	SURFACE 4 SIDES

T

T	SEMI-TANGENT,
	THIRD CIRCLE,
	THREAD,
	TRUCK TRAFFIC VOLUME (IN PERCENT)
	OF DESIGN HOURLY VOLUME
Tan	TANGENT
TB	TERMINAL BOARD
TBB	THRIE BEAM BARRIER
Tbr	TIMBER
T&B	TOP AND BOTTOM
TC	TELEPHONE CABLE
TCB	TRAFFIC CONTROL BOX
TCE	TEMPORARY CONSTRUCTION EASEMENT
TDC	TELEPHONE DEMARCATION CABINET
Temp	TEMPORARY,
	TEMPERATURE,
	TEMPERED
TG	TOP OF GRADE
TI	TRAFFIC INDEX
TLS	TRUCK LOADING STAND PIPE
TMS	TRAFFIC MONITORING STATION
TOS	TRAFFIC OPERATIONS SYSTEM
Tot	TOTAL
TP	TELEPHONE POLE
TPB	TREATED PERMEABLE BASE
TPM	TREATED PERMEABLE MATERIAL
TQ	THREE-QUARTER CIRCLE
Trans	TRANSITION
TRM	TURF REINFORCEMENT MAT
TS	TRANSVERSE,
	TRAFFIC SIGNAL,
	TUBULAR STEEL
TT	TWO-THIRDS CIRCLE
TWSA	TREE WELL SPRINKLER ASSEMBLY
Typ	TYPICAL

U

UC	UNDERCROSSING
UD	UNDERDRAIN
UG	UNDERGROUND
UON	UNLESS OTHERWISE NOTED
UP	UNDERPASS
UPS	UNINTERRUPTIBLE POWER SUPPLY
UPSC	UNINTERRUPTIBLE POWER SUPPLY CONTROLLER
UPSM	UPS MODE

V

V	VALVE,
	DESIGN SPEED
Var	VARIABLE,
	VARIES
VC	VERTICAL CURVE
VCP	VITRIFIED CLAY PIPE
Veh	VEHICLE
Vert	VERTICAL
Via	VIADUCT
VIVDS	VIDEO IMAGE VEHICLE
	DETECTION SYSTEM
Vol	VOLUME

W

W	WEST,
	WIDTH
W/	WITH
W/O	WITHOUT
WB	WESTBOUND
WH	WEEP HOLE
Wht	WHITE
WIM	WEIGH-IN-MOTION
WM	WIRE MESH,
	WATER METER
WS	WATER SURFACE,
	WYE STRAINER
WSA	WYE STRAINER ASSEMBLY
WSP	WELDED STEEL PIPE
Wt	WEIGHT
WV	WATER VALVE
WW	WINGWALL
WWLOL	WINGWALL LAYOUT LINE
WWM	WELDED WIRE MESH

X

Xfmr	TRANSFORMER
X Sec	CROSS SECTION
Xing	CROSSING

Y

Yr	YEAR
Yrs	YEARS

Z

UNITS OF MEASUREMENT:

Some of the units used in the project plan quantity tables and in the Bid Item List are:

TABLE A

UNIT	DEFINITION
ACRE	ACRE
CF	CUBIC FOOT
CY	CUBIC YARD
EA	EACH
GAL	GALLON
LB	POUND
LF	LINEAR FOOT
LNMI	LANE MILE
LS	LUMP SUM
SQFT	SQUARE FOOT
SQYD	SQUARE YARD
STA	100 FEET
TON	2,000 POUNDS

Some of the units used in the plans other than in the project plan quantity tables are:

TABLE B

UNIT	DEFINITION
ksi	KIPS PER SQUARE INCH
ksf	KIPS PER SQUARE FOOT
psi	POUNDS PER SQUARE INCH
psf	POUNDS PER SQUARE FOOT
lb/ft^3, pcf	POUNDS PER CUBIC FOOT
tsf	TONS PER SQUARE FOOT
mph, MPH *	MILES PER HOUR
oz	OUNCE
lb	POUND
kip	1,000 POUNDS
cal	CALORIE
ft	FOOT OR FEET
gal	GALLON

* For use on a sign panel only

Some of the units used in the Electrical plans are:

TABLE C

UNIT	DEFINITION
A	AMPERE
bps	BITS PER SECOND
Bps	BYTES PER SECOND
FC	FOOT-CANDLE
Hz	HERTZ
k *	KILO
kV	KILOVOLT
kVA	KILOVOLT-AMPERE
kW	KILOWATT
M *	MEGA
m *	MILLI
mA	MILLIAMPERE
min	MINUTE
p *	PICO
s	SECOND
V	VOLT
VA	VOLT-AMPERE
V(dc)	VOLT (DIRECT CURRENT)
V(ac)	VOLT (ALTERNATING CURRENT)
W	WATT
Ω	OHM
μ *	MICRO

* Prefix to a unit

SYMBOLS:

Commonly used symbols for U.S. customary units

TABLE D

SYMBOL	DEFINITION
@	AT
℄	CENTERLINE
ø	NOMINAL DIAMETER, DIAMETER, PHASE
ℙ	PLATE
⅊	STATIONLINE

STATE OF CALIFORNIA
DEPARTMENT OF TRANSPORTATION

ABBREVIATIONS (SHEET 3 OF 3)

A3C

2026 STANDARD PLAN A3C

3

7-1-26

Return to Table of Contents

Dist	COUNTY	ROUTE	POST MILES TOTAL PROJECT	SHEET No.	TOTAL SHEETS

REGISTERED CIVIL ENGINEER

September 18, 2026
PLANS APPROVAL DATE

REGISTERED PROFESSIONAL ENGINEER Vincent Mitchell No. C85406 Exp. 9-30-26 CIVIL STATE OF CALIFORNIA

THE STATE OF CALIFORNIA OR ITS OFFICERS OR AGENTS SHALL NOT BE RESPONSIBLE FOR THE ACCURACY OR COMPLETENESS OF SCANNED COPIES OF THIS PLAN SHEET.

SYMBOLOGY FOR DESIGN FEATURES

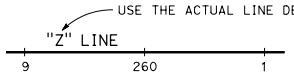

ALIGNMENT LINE
(STATION LINE)

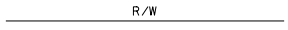

RIGHT OF WAY LINE
(POSITION LABEL OUTSIDE OF CALTRANS R/W)
(NO LEADER LINE OR ARROWHEAD IS NEEDED)

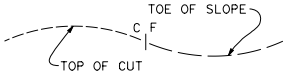

CATCH LINE FOR CUT AND FILL SLOPES

FINISHED GRADE LINE *(USE SOLID LINE)*

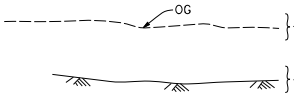

(USED FOR PROFILES AND TYPICAL SECTIONS)

ORIGINAL GROUND LINE

(MAY BE USED ON DETAIL SHEETS)

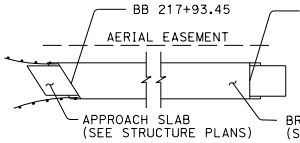

STRUCTURE (BRIDGE)

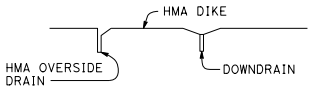

DIKE, DOWNDRAIN AND OVERSIDE DRAIN

PIPE CULVERT - SINGLE LINE
(36" OR LESS IN DIAMETER)
(PLUS - OTHER DRAINAGE FEATURES)

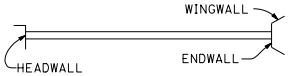

PIPE CULVERT - TWO LINES
(GREATER THAN 36" TO 6' IN DIAMETER
PLUS - OTHER DRAINAGE FEATURES)
(OVER 6' IN DIAMETER, DRAW TO SCALE)

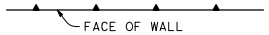

WALL

WALL ON BARRIER

WALL ON RETAINING WALL

CONCRETE (MEDIAN) BARRIER

NEW GUARDRAIL

DOUBLE THRIE BEAM BARRIER

TEMPORARY BARRIER SYSTEM

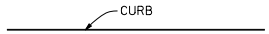

CURB WITHOUT GUTTER

CURB WITH GUTTER
(CURB-LIP, FLOW LINE, TOP-BACK OF CURB)

FENCE

EXISTING WALL - USE ONLY WHEN
WORK IS TO BE PERFORMED ON
EXISTING WALL *(DO NOT DROP OUT)*

EXISTING GUARDRAIL - USE ONLY
WHEN WORK IS TO BE PERFORMED ON
EXISTING RAILING *(DO NOT DROP OUT)*

EXISTING CONCRETE BARRIER - USE
ONLY WHEN WORK IS TO BE PERFORMED
ON EXISTING BARRIER *(DO NOT DROP OUT)*

SOLID TRAFFIC LINE

BROKEN TRAFFIC LINE

CURB RAMP

DIRECTION OF TRAFFIC
(ARROWS ARE TO BE HOLLOW)

STRIPING AND SIGNING

ROADSIDE SIGN - ONE POST, TWO POSTS (EMBEDDED)

ROADSIDE SIGN - ATTACHED TO ELECTROLIER, SIGNAL STANDARD,
SIGN STRUCTURE POST OR BARRIER

EXISTING ROADSIDE SIGN - ONE POST, TWO POSTS (EMBEDDED)

OVERHEAD SIGN - ONE POST

OVERHEAD SIGN - TWO POST

SYMBOL FOR ROADSIDE SIGN NUMBER

SYMBOL FOR OVERHEAD SIGN NUMBERING

SYMBOL FOR TRAFFIC LINE DETAIL

SYMBOL FOR DELINEATOR OR OBJECT MARKER

PAVEMENT MARKING ARROWS
(ARROWS ARE TO BE HATCHED)

BEGIN OR END OF TRAFFIC STRIPE

TRANSITION FROM ONE TRAFFIC STRIPE TO ANOTHER

STATE OF CALIFORNIA
DEPARTMENT OF TRANSPORTATION

LEGEND
LINES AND SYMBOLS
(SHEET 1 OF 5)

NO SCALE

A10A

2026 STANDARD PLAN A10A

7-1-26

Return to Table of Contents

Dist	COUNTY	ROUTE	POST MILES TOTAL PROJECT	SHEET No.	TOTAL SHEETS

REGISTERED CIVIL ENGINEER

September 18, 2026
PLANS APPROVAL DATE

REGISTERED PROFESSIONAL ENGINEER
Vincent Mitchell
No. C85406
Exp. 9-30-26
CIVIL
STATE OF CALIFORNIA

THE STATE OF CALIFORNIA OR ITS OFFICERS OR AGENTS SHALL NOT BE RESPONSIBLE FOR THE ACCURACY OR COMPLETENESS OF SCANNED COPIES OF THIS PLAN SHEET.

WATER POLLUTION CONTROL

-xx——xx—— THVF ——xx——xx——xx——	Temp HIGH-VISIBILITY FENCE
xx——xx—— TSF ——xx——xx——xx——	Temp SILT FENCE
-xx——xx—— TRSF ——xx——xx——xx——	Temp Reinf SILT FENCE
TFR	Temp FIBER ROLL
TGBB	Temp GRAVEL BAG BERM
TSBB	Temp STRAW BALE BARRIER
	Temp SLOPE DRAIN FLEX PIPE
	Temp EARTH BERM
	Temp DITCH/SWALE
WASH	Temp CONCRETE WASHOUT
	Temp DRAINAGE INLET PROTECTION
	Temp DRAINAGE OUTLET PROTECTION
	Temp CHECK DAM
	Temp CONSTRUCTION ENTRANCE
SP	Temp STOCKPILE

BOUNDARY LINE

STATE OR COUNTRY

COUNTY OR RESERVATION BOUNDARY

CITY OR MILITARY BOUNDARY

FOREST

SUBDIVISION, SECTION, GRANT

RANCHO

ENVIRONMENTALLY SENSITIVE AREA (ESA)

ESA

DRAINAGE

DIRECTION FLOW OF WATER

DRAINAGE SYSTEM SYMBOL

DRAINAGE UNIT SYMBOL

DRAINAGE INLET

DITCH FLOW LINE

DRAFTING

TILDE - DESIGNATES AN AREA

NORTH ARROW

ADDENDUM SHEET SYMBOL
(ADDENDUM NUMBER IS INCLUDED INSIDE THE SYMBOL)

MATCH LINE

BREAK LINE

STATE OF CALIFORNIA
DEPARTMENT OF TRANSPORTATION

LEGEND
LINES AND SYMBOLS
(SHEET 2 OF 5)

NO SCALE

A10B

7-1-26

2026 STANDARD PLAN A10B

Return to Table of Contents

Dist	COUNTY	ROUTE	POST MILES TOTAL PROJECT	SHEET No.	TOTAL SHEETS

REGISTERED CIVIL ENGINEER

September 18, 2026
PLANS APPROVAL DATE

REGISTERED PROFESSIONAL ENGINEER
Vincent Mitchell
No. C85406
Exp. 9-30-26
CIVIL
STATE OF CALIFORNIA

THE STATE OF CALIFORNIA OR ITS OFFICERS OR AGENTS SHALL NOT BE RESPONSIBLE FOR THE ACCURACY OR COMPLETENESS OF SCANNED COPIES OF THIS PLAN SHEET.

SUBSURFACE FACILITIES

W	NEW WATER
w	Exist WATER
G	NEW NATURAL GAS
g	Exist NATURAL GAS
S	NEW SEWER
s	Exist SEWER
E	NEW ELECTRICAL
e	Exist ELECTRICAL
T	NEW TELEPHONE
t	Exist TELEPHONE
GS	NEW GASOLINE
gs	Exist GASOLINE
O	NEW OIL
o	Exist OIL
TV	NEW TELEVISION
tv	Exist TELEVISION
ST	NEW STEAM
st	Exist STEAM
TC	NEW TELEMETER CABLE
tc	Exist TELEMETER CABLE
SD	NEW STORM DRAIN
sd	Exist STORM DRAIN
FO	NEW FIBER OPTIC
fo	Exist FIBER OPTIC
JT	NEW JOINT TRENCH
jt	Exist JOINT TRENCH
RCW	NEW RECYCLED WATER
rcw	Exist RECYCLED WATER
irr-c	Exist IRRIGATION CONDUIT
es-c	Exist ELECTRICAL SYSTEMS CONDUIT

OVERHEAD FACILITIES

E (OH) E	NEW ELECTRICAL
e (oh) e	Exist ELECTRICAL
TC (OH) TC	NEW TELEMETER CABLE
tc (oh) tc	Exist TELEMETER CABLE
T (OH) T	NEW TELEPHONE
t (oh) t	Exist TELEPHONE
TV (OH) TV	NEW TELEVISION
tv (oh) tv	Exist TELEVISION
FO (OH) FO	NEW FIBER OPTIC
fo (oh) fo	Exist FIBER OPTIC
JT (OH) JT	NEW JOINT OVERHEAD
jt (oh) jt	Exist JOINT OVERHEAD

SHOWING THE RELOCATION OF EXISTING FACILITIES TO THE NEW LOCATION

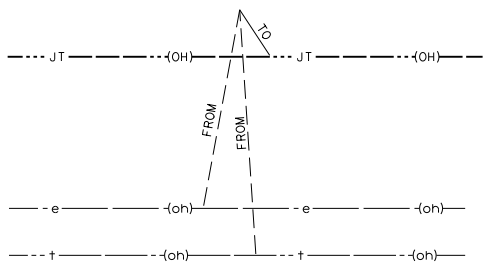

ABANDONED FACILITY

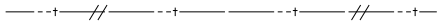

// *ABANDON SYMBOL IS THE CELL "ABANDN"*

THERE ARE LINE STYLES FOR ABANDONED UNDERGROUND UTILITIES IN THE CALTRANS LINE STYLE RESOURCE FILE (ct!style-SS3.rsc)

NOTE:

IDENTIFY (LABEL) THE OWNER OF EACH FACILITY PLUS THE SIZE, PRESSURE AND VOLTAGE (IF APPLICABLE) FOR ALL FACILITIES (WHETHER PART OF A JOINT OVERHEAD, JOINT TRENCH OR SOLO INSTALLATION).

THE TYPE OF FACILITY IS IDENTIFIED BY THE SYMBOLOGY OF THE LINE STYLE CHOSEN (SEE LINE STYLES ON THIS STANDARD PLAN SHEET).

WHEN USING THE JOINT OVERHEAD OR JOINT TRENCH SYMBOLOGY (SEE THE CALTRANS LINE STYLES ON THIS PAGE), USE A BRACKET TO GROUP AND LABEL ALL THE FACILITIES ASSOCIATED WITH THE JOINT OVERHEAD OR TRENCH (SEE THE EXAMPLES BELOW).

JOINT OVERHEAD/TRENCH

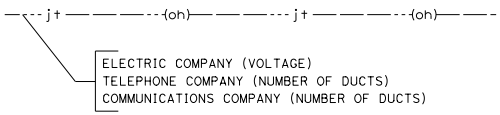

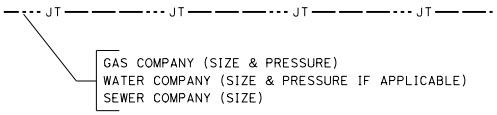

SOLO FACILITY

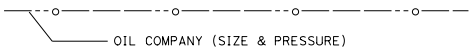

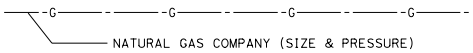

STATE OF CALIFORNIA
DEPARTMENT OF TRANSPORTATION

LEGEND
LINES AND SYMBOLS
(SHEET 3 OF 5)

NO SCALE

A10C

2026 STANDARD PLAN A10C

7-1-26

Return to Table of Contents

Dist	COUNTY	ROUTE	POST MILES TOTAL PROJECT	SHEET No.	TOTAL SHEETS

REGISTERED CIVIL ENGINEER

September 18, 2026

PLANS APPROVAL DATE

REGISTERED PROFESSIONAL ENGINEER
Vincent Mitchell
No. C85406
Exp. 9-30-26
CIVIL
STATE OF CALIFORNIA

THE STATE OF CALIFORNIA OR ITS OFFICERS OR AGENTS SHALL NOT BE RESPONSIBLE FOR THE ACCURACY OR COMPLETENESS OF SCANNED COPIES OF THIS PLAN SHEET.

EXISTING UTILITY POINT FEATURES

THE LEVEL AND COLOR OF AN EXISTING UTILITY POINT FEATURE SYMBOL MATCHES THE UTILITY TYPE LINE STYLE THAT IT IS ASSOCIATED WITH. THE NAME OF THE STANDARD CELLS FOR EACH SYMBOL VARY SLIGHTLY ACCORDING TO THE FACILITY TYPE [e.g., ut-MH-SEWER, ut-MH-GAS]. MULTIPLE VERSIONS OF A PARTICULAR SYMBOL REPRESENTING AN EXISTING UTILITY POINT FEATURE IS USED WHEN EACH IS ASSOCIATED WITH A DIFFERENT FACILITY [e.g., POWER POLE FOR OVERHEAD-ELECTRICAL, TELEPHONE, FIBER OPTIC, JOINT. ETC.]. THIS DIFFERENTIATION FACILITATES ASSET MANAGEMENT OF EXISTING UTILITY FEATURES WITHIN THE CALTRANS RIGHT OF WAY.

EXISTING UTILITY CELL SYMBOLOGY REPRESENTING UTILITY POINT FEATURES

ATTRIBUTES (METADATA) FOR UTILITY FEATURES WILL BE LOCATED IN UTILITY DATABASE. ONLY AS-BUILT FACILITIES ARE IN THE UTILITY DATABASE. UTILITY DATABASE DOES NOT INCLUDE NEW FACILITIES TO BE CONSTRUCTED.

CABINET:
ELECTRICAL, FIBER OPTIC, TELECOMMUNICATION, TELEPHONE, TELEVISION

DRAINAGE INLET:
SEWER, STORM DRAIN

FIRE HYDRANT:
WATER

LAMP POST:
ELECTRICAL

METER:
ELECTRICAL, NATURAL GAS, WATER

MANHOLE:
ELECTRICAL, FIBER OPTIC, GAS, JOINT FACILITY, NATURAL GAS, OIL, RECYCLED WATER, SEWER, STEAM, STORM DRAIN, TELECOMMUNICATION, TELEPHONE, TELEVISION, WATER

PULL BOX:
ELECTRICAL, FIBER OPTIC, JOINT FACILITY, TELECOMMUNICATION, TELEPHONE, TELEVISION

POWER POLE:
ELECTRICAL, FIBER OPTIC, JOINT FACILITY, TELECOMMUNICATION, TELEPHONE, TELEVISION

TRANSMISSION TOWER:
ELECTRICAL, FIBER OPTIC, JOINT FACILITY, TELECOMMUNICATION, TELEPHONE, TELEVISION

VALVE:
WATER, NATURAL GAS

VENT:
GAS, NATURAL GAS, SEWER, STEAM

VAULT:
ELECTRICAL, JOINT FACILITY

POSITIVE LOCATION

POSITIVE LOCATION SYMBOL IDENTIFYING THE POTHOLING NUMBER

POTHOLING SYMBOL MARKING THE EXACT LOCATION

STATE OF CALIFORNIA
DEPARTMENT OF TRANSPORTATION

LEGEND
LINES AND SYMBOLS
(SHEET 4 OF 5)

NO SCALE

A10D

2026 STANDARD PLAN A10D

7-1-26

Return to Table of Contents

Dist	COUNTY	ROUTE	POST MILES TOTAL PROJECT	SHEET No.	TOTAL SHEETS

REGISTERED CIVIL ENGINEER

September 18, 2026
PLANS APPROVAL DATE

REGISTERED PROFESSIONAL ENGINEER
Vincent Mitchell
No. C85406
Exp. 9-30-26
CIVIL
STATE OF CALIFORNIA

THE STATE OF CALIFORNIA OR ITS OFFICERS OR AGENTS SHALL NOT BE RESPONSIBLE FOR THE ACCURACY OR COMPLETENESS OF SCANNED COPIES OF THIS PLAN SHEET.

TOPOGRAPHIC MAPPING LINES AND SYMBOLS

TOPOGRAPHIC MAPPING IS DROPPED OUT ON FINAL CONTRACT PLANS

- CURB
- LANE STRIPE
- EDGE OF TRAVELED WAY (STATE HIGHWAY)
- EDGE OF TRAVELED WAY (OTHER)
- EDGE OF ASPHALT (SHOULDER)
- CONCRETE
- GUARDRAIL
- MEDIAN BARRIER
- FENCE
- MASONRY WALL
- MASONRY WALL AND FENCE
- RETAINING WALL
- RETAINING WALL AND FENCE
- RETAINING WALL AND MASONRY WALL
- FLOWLINE (NATURAL AND MANMADE)
- 73.9 — EDGE OF BODY OF WATER, SURFACE HATCHED AND SPOT ELEVATION ON SURFACE
- DECK — DECK, BUILDING, COVERED PORCH OR PARKING
- DP, R — DIRT PILE, ROCK
- POOL (P), SPA (S) — POOL, SPA
- TREES, BRUSH, OR VEGETATION OVER ½ CONTOUR INTERVAL IN HEIGHT
- VINEYARD ROW
- CATTLE GUARD
- OVERHEAD SIGN - SINGLE POST
- OVERHEAD SIGN - TWO POST
- TRAIL
- DIRT — DIRT ROAD

SYMBOLS

ENLARGED FOR CLARITY

- LEFT TURN LANE ARROW
- HOV LANE (HIGH OCCUPANCY VEHICLE)
- DROP INLET, ROUND DROP INLET
- MANHOLE
- FIRE HYDRANT
- VC, SP, WELL, UB, RS — VALVE COVER, STAND PIPE, WELL, UTILITY BOX, RAILROAD CROSSING STANDARD
- UTILITY POLE, POLE AND WIRES, POLE WITH WIRES AND ANCHOR
- TRANSMISSION TOWER
- ELECTROLIER, ELECTROLIER ON POLE
- TS, RS — TRAFFIC SIGNAL, RAILROAD SIGNAL
- CALL BOX
- SIGNS - SINGLE POST, TWO POSTS
- P — SINGLE TREE, PALM
- MARSH OR SWAMP
- CC — CRASH CUSHION
- TANK, T — TANK
- VOID - OBSTRUCTED AREA, UNABLE TO OBTAIN GROUND INFORMATION PHOTOGRAMMETRICALLY

RAILROAD

- SCALE: 1" = 100'
- SCALE: 1" = 50', 1" = 20'

CONTROL POINTS

- HORIZONTAL AND VERTICAL CONTROL POINT
- HORIZONTAL CONTROL POINT
- VERTICAL CONTROL POINT

TOPOGRAPHY

- 180, 170 — INDEX CONTOUR; INTERMEDIATE CONTOURS; INDEX CONTOUR (SCALE: 1" = 50')
- GNV CONTOUR (GROUND NOT VISIBLE)
- DEPRESSION CONTOUR
- GNV DEPRESSION CONTOUR
- 657.2 — SPOT ELEVATION (AT DECIMAL POINT)

WATER WAYS

- RIVERS, STREAMS AND CREEKS - SMALL (ONE LINE)
- RIVERS, STREAMS AND CREEKS - LARGE (TWO LINES) (WHICH DEFINES THE WATER EDGE)
- Land, Ocean — OCEAN - (GRADUATED LINE WEIGHTS)
- WATER EDGE, LAKE, POND, SWAMP

STATE OF CALIFORNIA
DEPARTMENT OF TRANSPORTATION

LEGEND
LINES AND SYMBOLS
(SHEET 5 OF 5)

NO SCALE

A10E

2026 STANDARD PLAN A10E

7-1-26

Return to Table of Contents

REFERENCE: CALTRANS SOIL & ROCK LOGGING, CLASSIFICATION, AND PRESENTATION MANUAL (2022)

Dist	COUNTY	ROUTE	POST MILES TOTAL PROJECT	SHEET No.	TOTAL SHEETS

CERTIFIED ENGINEERING GEOLOGIST

September 18, 2026
PLANS APPROVAL DATE

REGISTERED GEOLOGIST — Chris A. Risden — CERTIFIED ENGINEERING GEOLOGIST — No. 2541 — Exp. 3-30-27 — STATE OF CALIFORNIA

THE STATE OF CALIFORNIA OR ITS OFFICERS OR AGENTS SHALL NOT BE RESPONSIBLE FOR THE ACCURACY OR COMPLETENESS OF SCANNED COPIES OF THIS PLAN SHEET.

CEMENTATION

DESCRIPTION	CRITERIA
WEAK	CRUMBLES OR BREAKS WITH HANDLING OR LITTLE FINGER PRESSURE.
MODERATE	CRUMBLES OR BREAKS WITH CONSIDERABLE FINGER PRESSURE.
STRONG	WILL NOT CRUMBLE OR BREAK WITH FINGER PRESSURE.

ABBREVIATION:

GWS - GROUND WATER SURFACE

BOREHOLE IDENTIFICATION

SYMBOL	HOLE TYPE	DESCRIPTION
Size	A	AUGER BORING (HOLLOW OR SOLID STEM BUCKET)
Size	R RW RC P	ROTARY DRILLED BORING (CONVENTIONAL) ROTARY DRILLED WITH SELF-CASING WIRE-LINE ROTARY CORE WITH CONTINUOUSLY-SAMPLED, SELF-CASING WIRE-LINE ROTARY PERCUSSION BORING (AIR)
Size	R RC	ROTARY DRILLED DIAMOND CORE ROTARY DRILLED DIAMOND CORE, CONTINUOUSLY SAMPLED
Size	HD HA	HAND DRIVEN (1-INCH SOIL TUBE) HAND AUGER
●	D	DYNAMIC CONE PENETRATION BORING
▲	CPT	CONE PENETRATION TEST (ASTM D5778)
	O	OTHER (NOTE ON LOTB)

NOTE: SIZE IN INCHES.

CONSISTENCY OF COHESIVE SOILS

DESCRIPTION	SHEAR STRENGTH (tsf)	POCKET PENETROMETER MEASUREMENT, PP, (tsf)	TORVANE MEASUREMENT, TV, (tsf)	VANE SHEAR MEASUREMENT, VS, (tsf)
VERY SOFT	LESS THAN 0.12	LESS THAN 0.25	LESS THAN 0.12	LESS THAN 0.12
SOFT	0.12 - 0.25	0.25 - 0.5	0.12 - 0.25	0.12 - 0.25
MEDIUM STIFF	0.25 - 0.5	0.5 - 1	0.25 - 0.5	0.25 - 0.5
STIFF	0.5 - 1	1 - 2	0.5 - 1	0.5 - 1
VERY STIFF	1 - 2	2 - 4	1 - 2	1 - 2
HARD	GREATER THAN 2	GREATER THAN 4	GREATER THAN 2	GREATER THAN 2

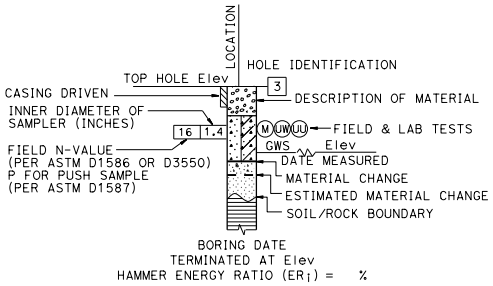

ROTARY BORING

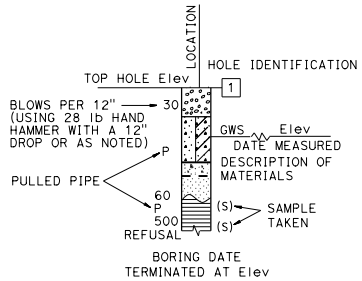

HAND BORING

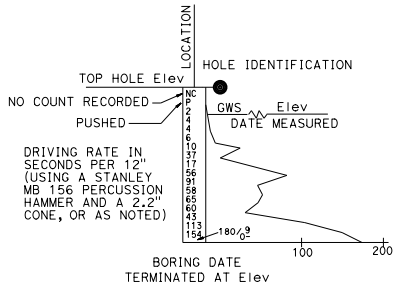

DYNAMIC CONE PENETRATION BORING

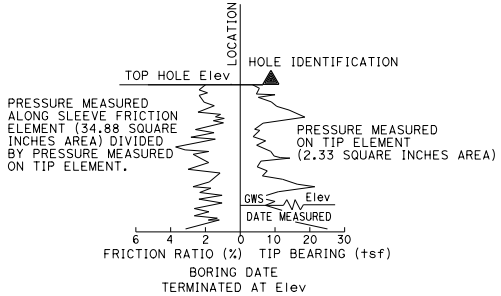

CONE PENETRATION TEST (CPT) BORING

STATE OF CALIFORNIA
DEPARTMENT OF TRANSPORTATION

LEGEND - SOIL (SHEET 1 OF 2)

NO SCALE

A10F

2026 STANDARD PLAN A10F

7-1-26

Return to Table of Contents

REFERENCE: CALTRANS SOIL & ROCK LOGGING, CLASSIFICATION, AND PRESENTATION MANUAL (2022)

Dist	COUNTY	ROUTE	POST MILES TOTAL PROJECT	SHEET No.	TOTAL SHEETS

CERTIFIED ENGINEERING GEOLOGIST

September 18, 2026
PLANS APPROVAL DATE

REGISTERED GEOLOGIST
Chris A. Risden
CERTIFIED ENGINEERING GEOLOGIST
No. 2541
Exp. 9-30-27
STATE OF CALIFORNIA

THE STATE OF CALIFORNIA OR ITS OFFICERS OR AGENTS SHALL NOT BE RESPONSIBLE FOR THE ACCURACY OR COMPLETENESS OF SCANNED COPIES OF THIS PLAN SHEET.

GROUP SYMBOLS AND NAMES

GRAPHIC/SYMBOL	GROUP NAMES	GRAPHIC/SYMBOL	GROUP NAMES
GW	WELL-GRADED GRAVEL WELL-GRADED GRAVEL WITH SAND	CL	LEAN CLAY LEAN CLAY WITH SAND LEAN CLAY WITH GRAVEL SANDY LEAN CLAY SANDY LEAN CLAY WITH GRAVEL GRAVELLY LEAN CLAY GRAVELLY LEAN CLAY WITH SAND
GP	POORLY-GRADED GRAVEL POORLY-GRADED GRAVEL WITH SAND		
GW-GM	WELL-GRADED GRAVEL WITH SILT WELL-GRADED GRAVEL WITH SILT AND SAND	CL-ML	SILTY CLAY SILTY CLAY WITH SAND SILTY CLAY WITH GRAVEL SANDY SILTY CLAY SANDY SILTY CLAY WITH GRAVEL GRAVELLY SILTY CLAY GRAVELLY SILTY CLAY WITH SAND
GW-GC	WELL-GRADED GRAVEL WITH CLAY (OR SILTY CLAY) WELL-GRADED GRAVEL WITH CLAY AND SAND (OR SILTY CLAY AND SAND)		
GP-GM	POORLY-GRADED GRAVEL WITH SILT POORLY-GRADED GRAVEL WITH SILT AND SAND	ML	SILT SILT WITH SAND SILT WITH GRAVEL SANDY SILT SANDY SILT WITH GRAVEL GRAVELLY SILT GRAVELLY SILT WITH SAND
GP-GC	POORLY-GRADED GRAVEL WITH CLAY (OR SILTY CLAY) POORLY-GRADED GRAVEL WITH CLAY AND SAND (OR SILTY CLAY AND SAND)		
GM	SILTY GRAVEL SILTY GRAVEL WITH SAND	OL	ORGANIC LEAN CLAY ORGANIC LEAN CLAY WITH SAND ORGANIC LEAN CLAY WITH GRAVEL SANDY ORGANIC LEAN CLAY SANDY ORGANIC LEAN CLAY WITH GRAVEL GRAVELLY ORGANIC LEAN CLAY GRAVELLY ORGANIC LEAN CLAY WITH SAND
GC	CLAYEY GRAVEL CLAYEY GRAVEL WITH SAND		
GC-GM	SILTY, CLAYEY GRAVEL SILTY, CLAYEY GRAVEL WITH SAND	OL	ORGANIC SILT ORGANIC SILT WITH SAND ORGANIC SILT WITH GRAVEL SANDY ORGANIC SILT SANDY ORGANIC SILT WITH GRAVEL GRAVELLY ORGANIC SILT GRAVELLY ORGANIC SILT WITH SAND
SW	WELL-GRADED SAND WELL-GRADED SAND WITH GRAVEL		
SP	POORLY-GRADED SAND POORLY-GRADED SAND WITH GRAVEL	CH	FAT CLAY FAT CLAY WITH SAND FAT CLAY WITH GRAVEL SANDY FAT CLAY SANDY FAT CLAY WITH GRAVEL GRAVELLY FAT CLAY GRAVELLY FAT CLAY WITH SAND
SW-SM	WELL-GRADED SAND WITH SILT WELL-GRADED SAND WITH SILT AND GRAVEL		
SW-SC	WELL-GRADED SAND WITH CLAY (OR SILTY CLAY) WELL-GRADED SAND WITH CLAY AND GRAVEL (OR SILTY CLAY AND GRAVEL)	MH	ELASTIC SILT ELASTIC SILT WITH SAND ELASTIC SILT WITH GRAVEL SANDY ELASTIC SILT SANDY ELASTIC SILT WITH GRAVEL GRAVELLY ELASTIC SILT GRAVELLY ELASTIC SILT WITH SAND
SP-SM	POORLY-GRADED SAND WITH SILT POORLY-GRADED SAND WITH SILT AND GRAVEL		
SP-SC	POORLY-GRADED SAND WITH CLAY (OR SILTY CLAY) POORLY-GRADED SAND WITH CLAY AND GRAVEL (OR SILTY CLAY AND GRAVEL)	OH	ORGANIC FAT CLAY ORGANIC FAT CLAY WITH SAND ORGANIC FAT CLAY WITH GRAVEL SANDY ORGANIC FAT CLAY SANDY ORGANIC FAT CLAY WITH GRAVEL GRAVELLY ORGANIC FAT CLAY GRAVELLY ORGANIC FAT CLAY WITH SAND
SM	SILTY SAND SILTY SAND WITH GRAVEL		
SC	CLAYEY SAND CLAYEY SAND WITH GRAVEL	OH	ORGANIC ELASTIC SILT ORGANIC ELASTIC SILT WITH SAND ORGANIC ELASTIC SILT WITH GRAVEL SANDY ORGANIC ELASTIC SILT SANDY ORGANIC ELASTIC SILT WITH GRAVEL GRAVELLY ORGANIC ELASTIC SILT GRAVELLY ORGANIC ELASTIC SILT WITH SAND
SC-SM	SILTY, CLAYEY SAND SILTY, CLAYEY SAND WITH GRAVEL		
PT	PEAT	OL/OH	ORGANIC SOIL ORGANIC SOIL WITH SAND ORGANIC SOIL WITH GRAVEL SANDY ORGANIC SOIL SANDY ORGANIC SOIL WITH GRAVEL GRAVELLY ORGANIC SOIL GRAVELLY ORGANIC SOIL WITH SAND
	COBBLES COBBLES AND BOULDERS BOULDERS		

FIELD AND LABORATORY TESTING

- (C) CONSOLIDATION
- (CR) CORROSIVITY TESTING
- (CU) CONSOLIDATED UNDRAINED TRIAXIAL
- (DS) DIRECT SHEAR
- (EI) EXPANSION INDEX
- (HC) HYDRAULIC CONDUCTIVITY
- (OC) ORGANIC CONTENT-%
- (PA) PARTICLE SIZE ANALYSIS
- (PI) PLASTICITY INDEX LIQUID LIMIT
- (PL) POINT LOAD INDEX
- (UC) UNCONFINED COMPRESSION - SOIL UNCONFINED COMPRESSION - ROCK
- (UU) UNCONSOLIDATED UNDRAINED TRIAXIAL
- (W) 200 SIEVE TEST

APPARENT DENSITY OF COHESIONLESS SOILS

DESCRIPTION	SPT N_{60} (BLOWS/12 INCHES)
VERY LOOSE	0 - 5
LOOSE	5 - 10
MEDIUM DENSE	10 - 30
DENSE	30 - 50
VERY DENSE	GREATER THAN 50

MOISTURE

DESCRIPTION	CRITERIA
DRY	NO DISCERNABLE MOISTURE
MOIST	MOISTURE PRESENT, BUT NO FREE WATER
WET	VISIBLE FREE WATER

PERCENT OR PROPORTION OF SOILS

DESCRIPTION	CRITERIA
TRACE	PARTICLES ARE PRESENT BUT ESTIMATED TO BE LESS THAN 5%
FEW	5% - 10%
LITTLE	15% - 25%
SOME	30% - 45%
MOSTLY	50% - 100%

PARTICLE SIZE

DESCRIPTION		SIZE
BOULDER		GREATER THAN 12"
COBBLE		3" - 12"
GRAVEL	COARSE	¾" - 3"
	FINE	⅕" - ¾"
SAND	COARSE	1/16" - ⅕"
	MEDIUM	1/64" - 1/16"
	FINE	1/300" - 1/64"
SILT AND CLAY		LESS THAN 1/300"

STATE OF CALIFORNIA
DEPARTMENT OF TRANSPORTATION

LEGEND - SOIL (SHEET 2 OF 2)

NO SCALE

A10G

2026 STANDARD PLAN A10G

7-1-26

Return to Table of Contents

Dist	COUNTY	ROUTE	POST MILES TOTAL PROJECT	SHEET No.	TOTAL SHEETS

CERTIFIED ENGINEERING GEOLOGIST

September 18, 2026
PLANS APPROVAL DATE

REGISTERED GEOLOGIST
Chris A. Risden
CERTIFIED ENGINEERING GEOLOGIST
No. 2541
Exp. 9-30-27
STATE OF CALIFORNIA

THE STATE OF CALIFORNIA OR ITS OFFICERS OR AGENTS SHALL NOT BE RESPONSIBLE FOR THE ACCURACY OR COMPLETENESS OF SCANNED COPIES OF THIS PLAN SHEET.

REFERENCE: CALTRANS SOIL & ROCK LOGGING, CLASSIFICATION, AND PRESENTATION MANUAL (2022)

PERCENT CORE RECOVERY (REC) & ROCK QUALITY DESIGNATION (RQD)

$$REC = \frac{\sum \text{LENGTH OF THE RECOVERED CORE PIECES (INCHES)}}{\text{TOTAL LENGTH OF CORE RUN (INCHES)}} \times 100\%$$

$$RQD = \frac{\sum \text{LENGTH OF INTACT CORE PIECES} \geq 4 \text{ INCHES}}{\text{TOTAL LENGTH OF CORE RUN (INCHES)}} \times 100\%$$

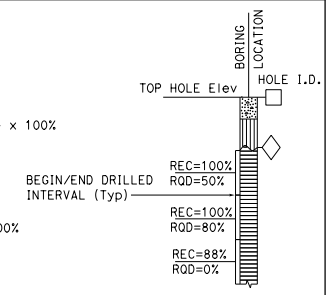

RQD* INDICATES SOUDNESS CRITERIA NOT MET.

BEDDING SPACING

DESCRIPTION	THICKNESS/SPACING
MASSIVE	GREATER THAN 10′
VERY THICKLY BEDDED	3′ - 10′
THICKLY BEDDED	1′ - 3′
MODERATELY BEDDED	4" - 1′
THINLY BEDDED	1" - 4"
VERY THINLY BEDDED	¼" - 1"
LAMINATED	LESS THAN ¼"

LEGEND OF ROCK MATERIALS

- IGNEOUS ROCK
- SEDIMENTARY ROCK
- METAMORPHIC ROCK

ROCK HARDNESS

DESCRIPTION	CRITERIA
EXTREMELY HARD	CANNOT BE SCRATCHED WITH A POCKETKNIFE OR SHARP PICK. CAN ONLY BE CHIPPED WITH REPEATED HEAVY HAMMER BLOWS.
VERY HARD	CANNOT BE SCRATCHED WITH A POCKETKNIFE OR SHARP PICK. BREAKS WITH REPEATED HEAVY HAMMER BLOWS.
HARD	CAN BE SCRATCHED WITH A POCKETKNIFE OR SHARP PICK WITH DIFFICULTY (HEAVY PRESSURE). BREAKS WITH HEAVY HAMMER BLOWS.
MODERATELY HARD	CAN BE SCRATCHED WITH POCKETKNIFE OR SHARP PICK WITH LIGHT OR MODERATE PRESSURE. BREAKS WITH MODERATE HAMMER BLOWS.
MODERATELY SOFT	CAN BE GROOVED 1/16" DEEP WITH A POCKETKNIFE OR SHARP PICK WITH MODERATE OR HEAVY PRESSURE. BREAKS WITH LIGHT HAMMER BLOW OR HEAVY MANUAL PRESSURE.
SOFT	CAN BE GROOVED OR GOUGED EASILY BY A POCKETKNIFE OR SHARP PICK WITH LIGHT PRESSURE, CAN BE SCRATCHED WITH FINGERNAIL. BREAKS WITH LIGHT TO MODERATE MANUAL PRESSURE.
VERY SOFT	CAN BE READILY INDENTED, GROOVED OR GOUGED WITH FINGERNAIL, OR CARVED WITH A POCKETKNIFE. BREAKS WITH LIGHT MANUAL PRESSURE.

FRACTURE DENSITY

DESCRIPTION	OBSERVED FRACTURE DENSITY
UNFRACTURED	NO FRACTURES.
VERY SLIGHTLY FRACTURED	CORE LENGTHS GREATER THAN 3 ft.
SLIGHTLY FRACTURED	CORE LENGTHS MOSTLY FROM 1 TO 3 ft.
MODERATELY FRACTURED	CORE LENGTHS MOSTLY FROM 4 INCHES TO 1 ft.
INTENSELY FRACTURED	CORE LENGTHS MOSTLY FROM 1 TO 4 INCHES.
VERY INTENSELY FRACTURED	MOSTLY CHIPS AND FRAGMENTS.

WEATHERING DESCRIPTORS FOR INTACT ROCK

DESCRIPTION	DIAGNOSTIC FEATURES					GENERAL CHARACTERISTICS
	CHEMICAL WEATHERING-DISCOLORATION AND/OR OXIDATION		MECHANICAL WEATHERING-GRAIN BOUNDARY CONDITIONS (DISAGGREGATION) PRIMARILY FOR GRANITICS AND SOME COARSE-GRAINED SEDIMENTS	TEXTURE AND LEACHING		
	BODY OF ROCK	FRACTURE SURFACES		TEXTURE	LEACHING	
FRESH	NO DISCOLORATION, NOT OXIDIZED.	NO DISCOLORATION OR OXIDATION.	NO SEPARATION, INTACT (TIGHT).	NO CHANGE	NO LEACHING	HAMMER RINGS WHEN CRYSTALLINE ROCKS ARE STRUCK.
SLIGHTLY WEATHERED	DISCOLORATION OR OXIDATION IS LIMITED TO SURFACE OF, OR SHORT DISTANCE FROM, FRACTURES; SOME FELDSPAR CRYSTALS ARE DULL.	MINOR TO COMPLETE DISCOLORATION OR OXIDATION OF MOST SURFACES.	NO VISIBLE SEPARATION, INTACT (TIGHT).	PRESERVED	MINOR LEACHING OF SOME SOLUBLE MINERALS.	HAMMER RINGS WHEN CRYSTALLINE ROCKS ARE STRUCK. BODY OF ROCK NOT WEAKENED.
MODERATELY WEATHERED	DISCOLORATION OR OXIDATION EXTENDS FROM FRACTURES USUALLY THROUGHOUT; Fe-Mg MINERALS ARE "RUSTY," FELDSPAR CRYSTALS ARE "CLOUDY."	ALL FRACTURE SURFACES ARE DISCOLORED OR OXIDIZED.	PARTIAL SEPARATION OF BOUNDARIES VISIBLE.	GENERALLY PRESERVED	SOLUBLE MINERALS MAY BE MOSTLY LEACHED.	HAMMER DOES NOT RING WHEN ROCK IS STRUCK. BODY OF ROCK IS SLIGHTLY WEAKENED.
INTENSELY WEATHERED	DISCOLORATION OR OXIDATION THROUGHOUT; ALL FELDSPARS AND Fe-Mg MINERALS ARE ALTERED TO CLAY TO SOME EXTENT; OR CHEMICAL ALTERATION PRODUCES IN-SITU DISAGGREGATION, SEE GRAIN BOUNDARY CONDITIONS.	ALL FRACTURE SURFACES ARE DISCOLORED OR OXIDIZED, SURFACES FRIABLE.	PARTIAL SEPARATION, ROCK IS FRIABLE; IN SEMIARID CONDITIONS GRANITICS ARE DISAGGREGATED.	TEXTURE ALTERED BY CHEMICAL DISINTEGRATION (HYDRATION, ARGILLATION).	LEACHING OF SOLUBLE MINERALS MAY BE COMPLETE.	DULL SOUND WHEN STRUCK WITH HAMMER, USUALLY CAN BE BROKEN WITH MODERATE TO HEAVY MANUAL PRESSURE OR BY LIGHT HAMMER BLOW WITHOUT REFERENCE TO PLANES OF WEAKNESS SUCH AS INCIPIENT OR HAIRLINE FRACTURES, OR VEINLETS. ROCK IS SIGNIFICANTLY WEAKENED.
DECOMPOSED	DISCOLORED OR OXIDIZED THROUGHOUT, BUT RESISTANT MINERALS SUCH AS QUARTZ MAY BE UNALTERED; ALL FELDSPARS AND Fe-Mg MINERALS ARE COMPLETELY ALTERED TO CLAY.		COMPLETE SEPARATION OF GRAIN BOUNDARIES (DISAGGREGATED).	RESEMBLES A SOIL, PARTIAL OR COMPLETE REMNANT ROCK STRUCTURE MAY BE PRESERVED; LEACHING OF SOLUBLE MINERALS USUALLY COMPLETE.		CAN BE GRANULATED BY HAND. RESISTANT MINERALS SUCH AS QUARTZ MAY BE PRESENT AS "STRINGERS" OR "DIKES."

STATE OF CALIFORNIA
DEPARTMENT OF TRANSPORTATION

LEGEND - ROCK

NO SCALE

A10H

2026 STANDARD PLAN A10H

7-1-26

Return to Table of Contents

Dist	COUNTY	ROUTE	POST MILES TOTAL PROJECT	SHEET No.	TOTAL SHEETS

REGISTERED CIVIL ENGINEER

September 18, 2026

PLANS APPROVAL DATE

REGISTERED PROFESSIONAL ENGINEER Jang, Deh-Jeng No. C59024 Exp. 6-30-27 CIVIL STATE OF CALIFORNIA

THE STATE OF CALIFORNIA OR ITS OFFICERS OR AGENTS SHALL NOT BE RESPONSIBLE FOR THE ACCURACY OR COMPLETENESS OF SCANNED COPIES OF THIS PLAN SHEET.

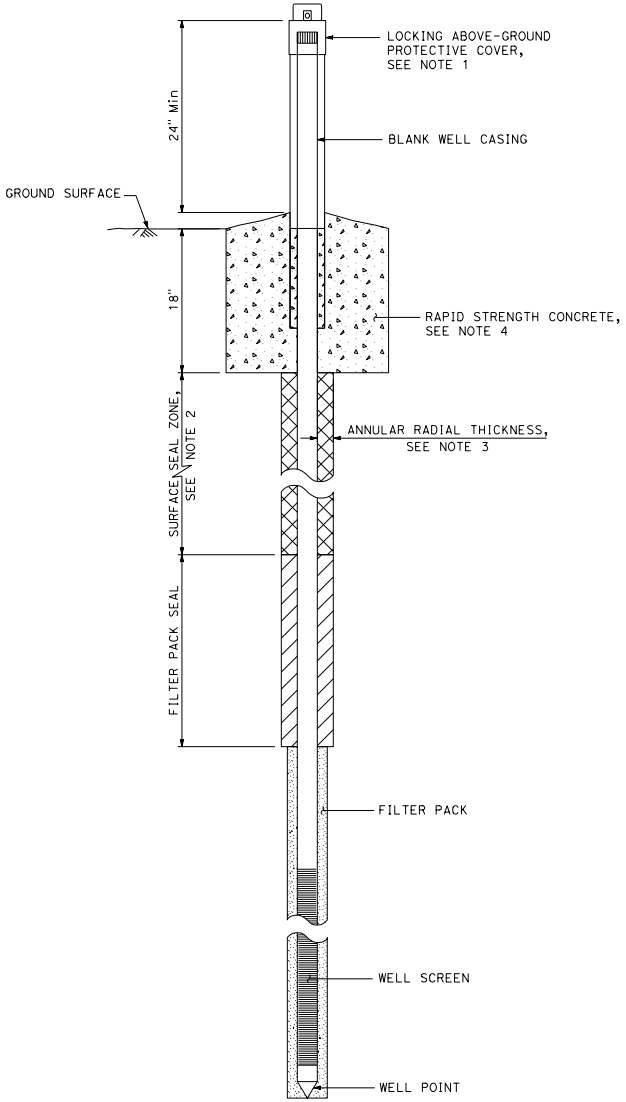

INSTALLATION WITH LOCKING ABOVE-GROUND PROTECTIVE COVER

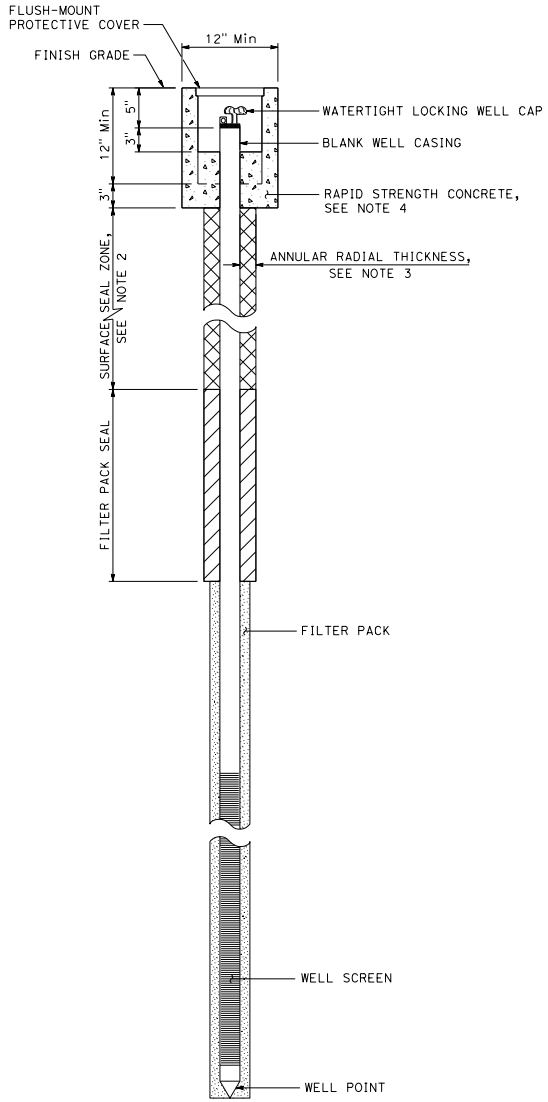

INSTALLATION WITH FLUSH-MOUNT PROTECTIVE COVER

NOTES:

1. Locking above-ground protective cover must be at least ½" above top of well casing.
2. Bottom elevation of surface seal must comply with Local Enforcement Agency's minimum depth requirement.
3. Annular radial thickness between borehole wall and casing, and horizontal clearance between casings must be at least 2".
4. Annular radial thickness between protective cover and borehole wall must be at least 2".

LEGEND:

- RAPID STRENGTH CONCRETE
- ANNULAR SEAL
- FILTER PACK
- FILTER PACK SEAL

STATE OF CALIFORNIA
DEPARTMENT OF TRANSPORTATION

MONITORING WELL

NO SCALE

A15A

2026 STANDARD PLAN A15A

7-1-26

Return to Table of Contents

Dist	COUNTY	ROUTE	POST MILES TOTAL PROJECT	SHEET No.	TOTAL SHEETS

Deh-Jeng Jang
REGISTERED CIVIL ENGINEER

September 18, 2026
PLANS APPROVAL DATE

REGISTERED PROFESSIONAL ENGINEER
Jang, Deh-Jeng
No. C59024
Exp. 6-30-27
CIVIL
STATE OF CALIFORNIA

THE STATE OF CALIFORNIA OR ITS OFFICERS OR AGENTS SHALL NOT BE RESPONSIBLE FOR THE ACCURACY OR COMPLETENESS OF SCANNED COPIES OF THIS PLAN SHEET.

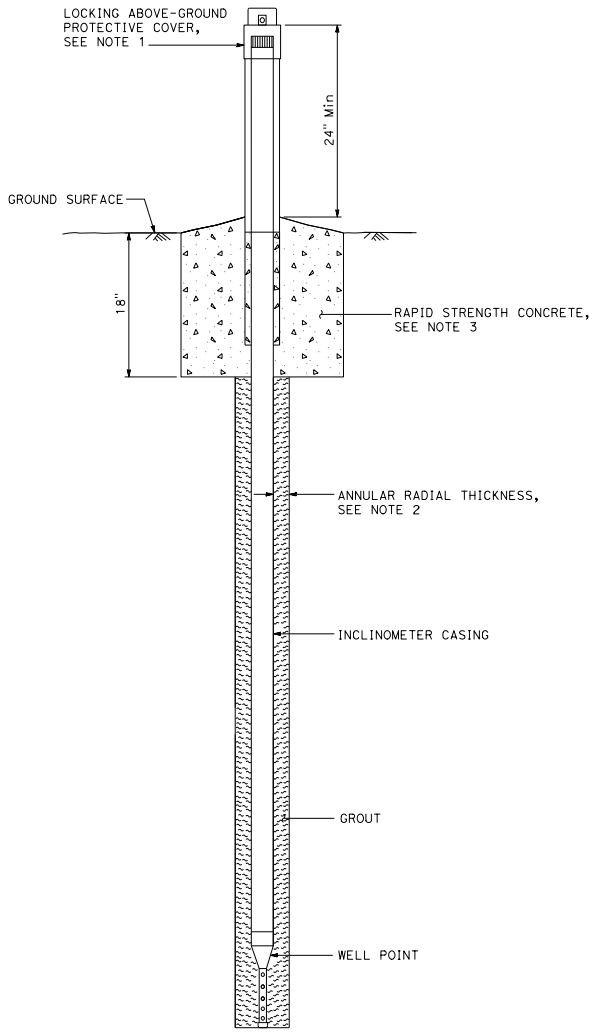

INSTALLATION WITH LOCKING ABOVE-GROUND PROTECTIVE COVER

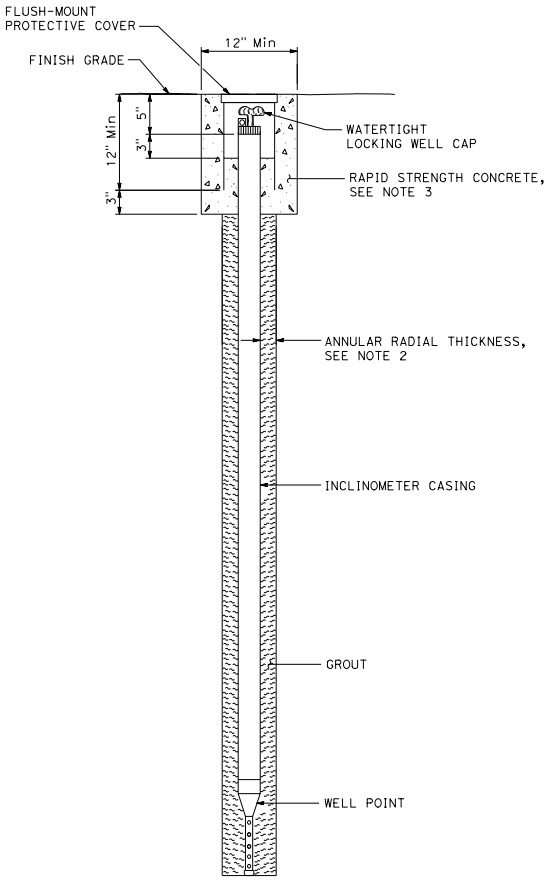

INSTALLATION WITH FLUSH-MOUNT PROTECTIVE COVER

NOTES:

1. Locking above-ground protective cover must be at least ½" above top of well casing.
2. Annular radial thickness between borehole wall and casing, and horizontal clearance between casings must be at least 2".
3. Annular radial thickness between protective cover and borehole wall must be at least 2".

LEGEND:

RAPID STRENGTH CONCRETE

GROUT

STATE OF CALIFORNIA
DEPARTMENT OF TRANSPORTATION

MONITORING WELL INCLINOMETER

NO SCALE

A15B

2026 STANDARD PLAN A15B

7-1-26

Return to Table of Contents

Dist	COUNTY	ROUTE	POST MILES TOTAL PROJECT	SHEET No.	TOTAL SHEETS

REGISTERED CIVIL ENGINEER

September 18, 2026

PLANS APPROVAL DATE

REGISTERED PROFESSIONAL ENGINEER — Mike Malyy — No. C83437 — Exp. 3-31-27 — CIVIL — STATE OF CALIFORNIA

THE STATE OF CALIFORNIA OR ITS OFFICERS OR AGENTS SHALL NOT BE RESPONSIBLE FOR THE ACCURACY OR COMPLETENESS OF SCANNED COPIES OF THIS PLAN SHEET.

CENTERLINES

(2 LANE HIGHWAYS)

DETAIL 1

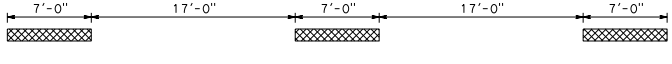

DETAIL 2

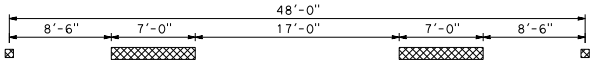

~~DETAIL 3~~ DETAIL 3 DELETED

~~DETAIL 4~~ DETAIL 4 DELETED

DETAIL 5

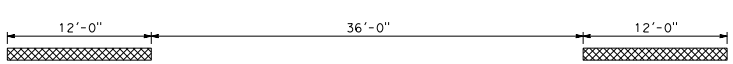

DETAIL 6

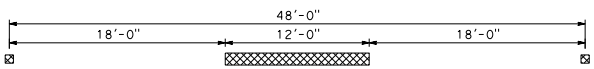

~~DETAIL 7~~ DETAIL 7 DELETED

LANE LINES

(MULTILANE HIGHWAYS)

DETAIL 8

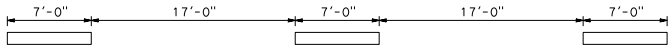

DETAIL 9

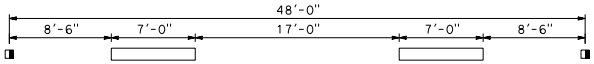

DETAIL 9A

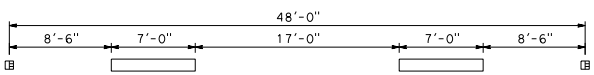

~~DETAIL 10~~ DETAIL 10 DELETED

DETAIL 11

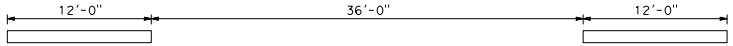

DETAIL 12

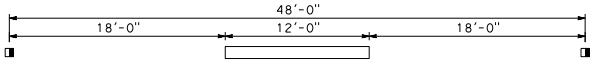

DETAIL 12A

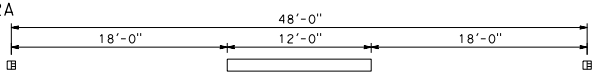

~~DETAIL 13~~ DETAIL 13 DELETED

~~DETAIL 14~~ DETAIL 14 DELETED

~~DETAIL 14A~~ DETAIL 14A DELETED

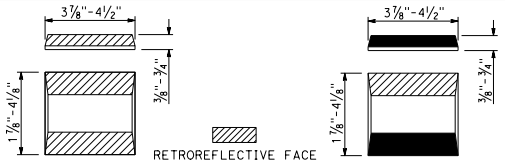

TYPE C AND TYPE D — TYPE G AND TYPE H

MARKER DETAILS

NOTE:
Pavement markers shown off the solid line may be placed on the line.

NO PASSING ZONES - ONE DIRECTION

DETAIL 15

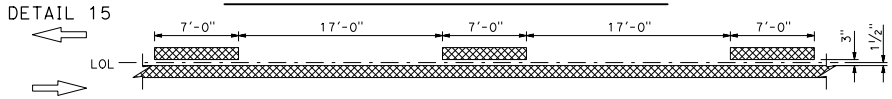

DETAIL 16

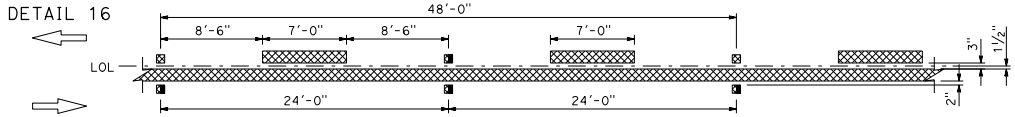

~~DETAIL 17~~ DETAIL 17 DELETED

DETAIL 18

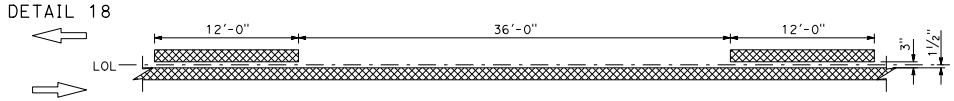

DETAIL 19

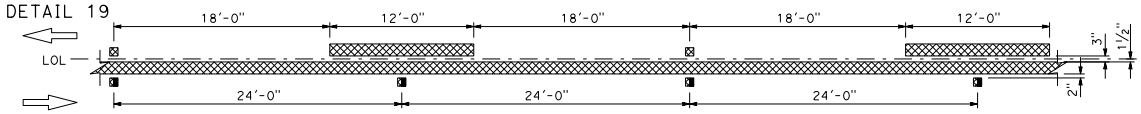

~~DETAIL 20~~ DETAIL 20 DELETED

NO PASSING ZONES - TWO DIRECTION

DETAIL 21

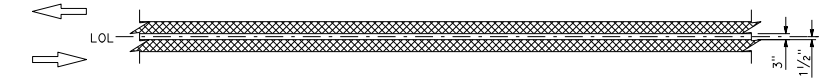

DETAIL 22

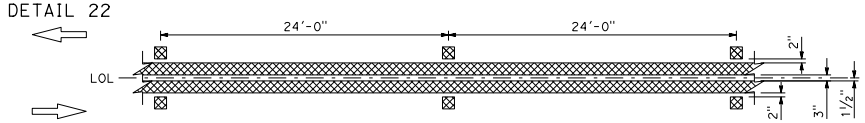

~~DETAIL 23~~ DETAIL 23 DELETED

LEGEND:

- TYPE C RED-CLEAR RETROREFLECTIVE MARKER
- TYPE D TWO-WAY YELLOW RETROREFLECTIVE MARKER
- TYPE G ONE-WAY CLEAR RETROREFLECTIVE MARKER
- TYPE H ONE-WAY YELLOW RETROREFLECTIVE MARKER
- 6" WHITE LINE
- 6" YELLOW LINE

STATE OF CALIFORNIA
DEPARTMENT OF TRANSPORTATION

PAVEMENT MARKERS AND TRAFFIC LINES TYPICAL DETAILS

NO SCALE

A20A

2026 STANDARD PLAN A20A

7-1-26

Return to Table of Contents

Dist	COUNTY	ROUTE	POST MILES TOTAL PROJECT	SHEET No.	TOTAL SHEETS

REGISTERED CIVIL ENGINEER

September 18, 2026
PLANS APPROVAL DATE

Mike Malyy
No. C83437
Exp. 3-31-27
CIVIL
STATE OF CALIFORNIA
REGISTERED PROFESSIONAL ENGINEER

THE STATE OF CALIFORNIA OR ITS OFFICERS OR AGENTS SHALL NOT BE RESPONSIBLE FOR THE ACCURACY OR COMPLETENESS OF SCANNED COPIES OF THIS PLAN SHEET.

LEFT EDGE LINES

(DIVIDED HIGHWAYS)
See Note

DETAIL 24

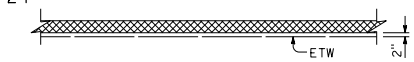

DETAIL 25

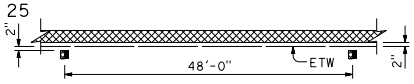

DETAIL 25A

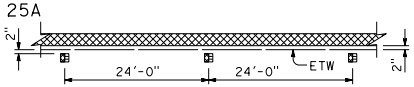

DETAIL 25B

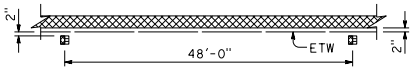

DETAIL 26

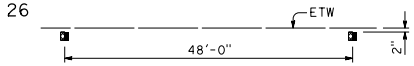

DETAIL 26A

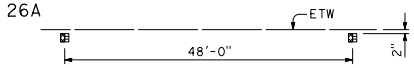

DETAIL 26B

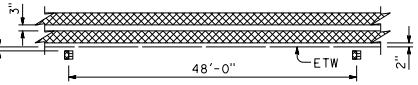

DETAIL 27

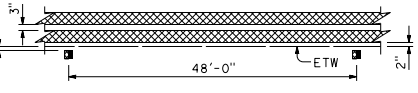

RIGHT EDGE LINES

~~DETAIL 27A~~ DETAIL 27A DELETED

DETAIL 27B

RIGHT EDGE LINE EXTENSION THROUGH INTERSECTIONS

DETAIL 27C

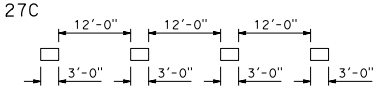

LEFT EDGE LINES NOTE:
On freeways use traffic stripe details with Type RY markers.

MEDIAN ISLANDS

DETAIL 28

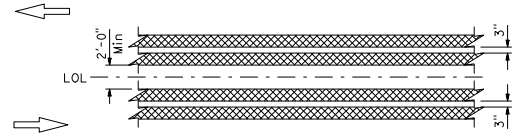

DETAIL 29

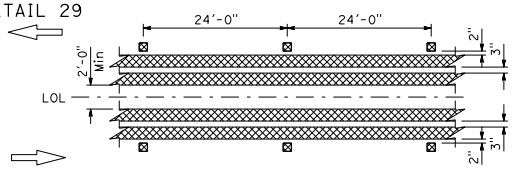

~~DETAIL 30~~ DETAIL 30 DELETED

TWO-WAY LEFT TURN LANES

DETAIL 31

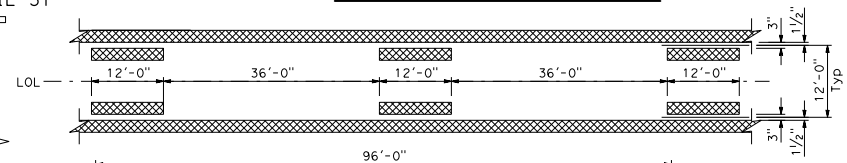

DETAIL 32

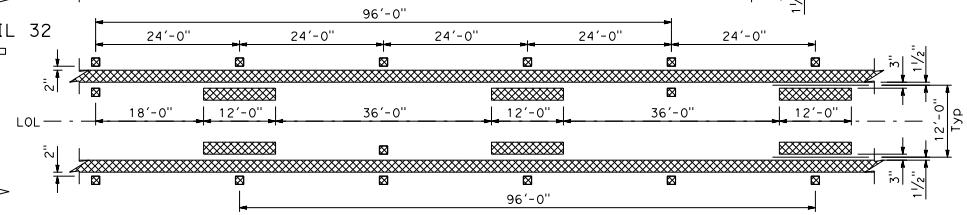

~~DETAIL 33~~ DETAIL 33 DELETED

INTERSECTION TREATMENTS

DETAIL 34

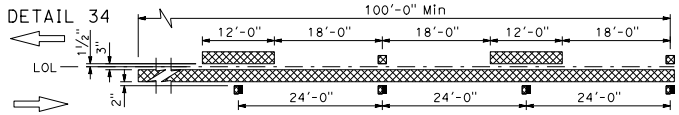

DETAIL 34A

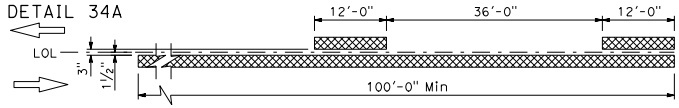

DETAIL 35

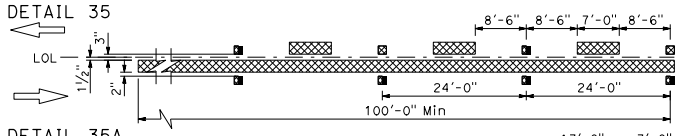

DETAIL 35A

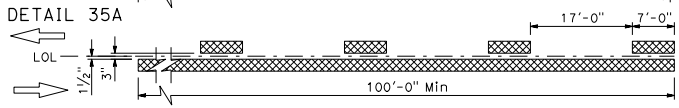

CENTERLINE INTERSECTING STREET

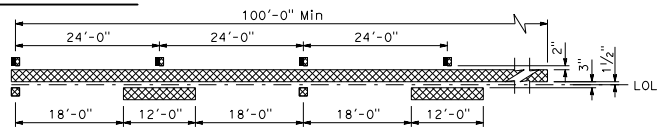

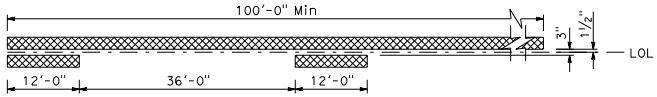

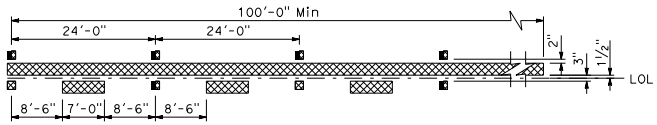

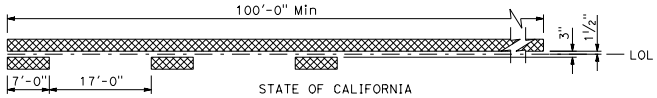

LEGEND:

- TYPE D TWO-WAY YELLOW RETROREFLECTIVE MARKER
- TYPE H ONE-WAY YELLOW RETROREFLECTIVE MARKER
- TYPE RY RED-YELLOW RETROREFLECTIVE MARKER
- 6" WHITE
- 6" YELLOW

NOTE:
Pavement markers shown off the solid line may be placed on the line.

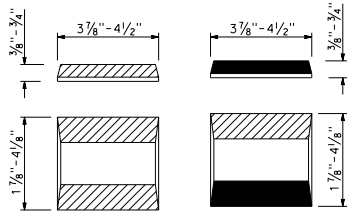

RETROREFLECTIVE FACE

TYPE RY AND TYPE D

TYPE H

MARKER DETAILS

STATE OF CALIFORNIA
DEPARTMENT OF TRANSPORTATION

PAVEMENT MARKERS AND TRAFFIC LINES TYPICAL DETAILS

NO SCALE

A20B

2026 STANDARD PLAN A20B

7-1-26

Return to Table of Contents

Dist	COUNTY	ROUTE	POST MILES TOTAL PROJECT	SHEET No.	TOTAL SHEETS

REGISTERED CIVIL ENGINEER

September 18, 2026
PLANS APPROVAL DATE

REGISTERED PROFESSIONAL ENGINEER Mike Malyy No. C83437 Exp. 3-31-27 CIVIL STATE OF CALIFORNIA

THE STATE OF CALIFORNIA OR ITS OFFICERS OR AGENTS SHALL NOT BE RESPONSIBLE FOR THE ACCURACY OR COMPLETENESS OF SCANNED COPIES OF THIS PLAN SHEET.

NOTES:

1. Install a minimum of 1 chevron in the gore area. If at least 1 chevron will not fit into the gore area, do not install chevrons.
2. Terminate chevron markings at physical gore.
3. Gore area chevron pavement markings shown. For exit and entrance ramp channelizing lines details, see Details 36, 36A, and 36B.

EXIT RAMP NEUTRAL AREA (GORE) TREATMENT

DETAIL 36

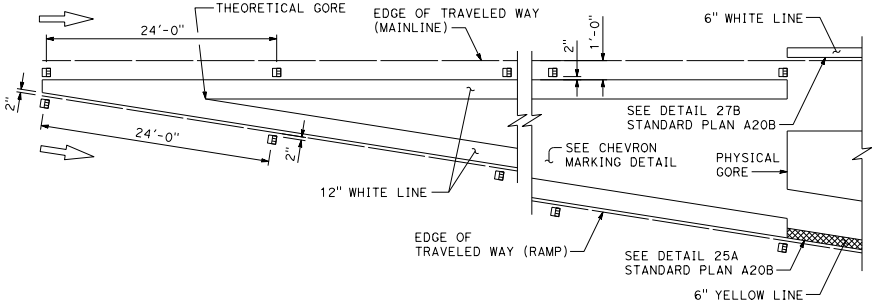

LANE DROP AT EXIT RAMPS

DETAIL 37

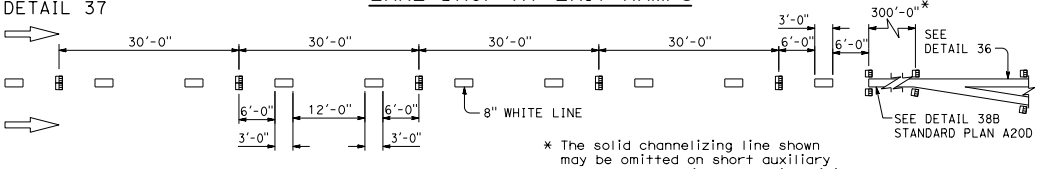

* The solid channelizing line shown may be omitted on short auxiliary lanes where weaving length is critical.

~~DETAIL 37A~~ DETAIL 37A DELETED

ENTRANCE RAMP NEUTRAL AREA (MERGE) TREATMENT

DETAIL 36A

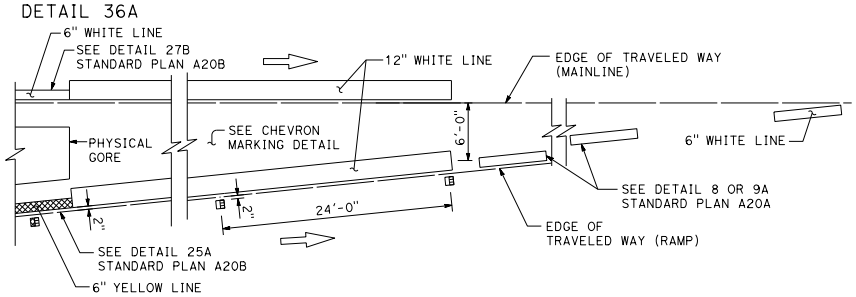

LANE DROP AT INTERSECTIONS

DETAIL 37B

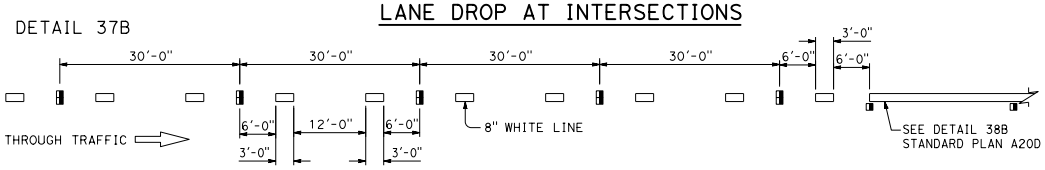

~~DETAIL 37C~~ DETAIL 37C DELETED

CHEVRON PAVEMENT MARKINGS AT EXIT RAMP GORE AREA

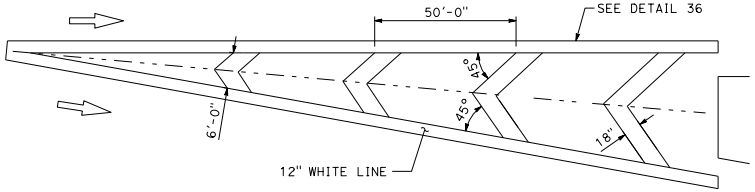

ENTRANCE RAMP NEUTRAL AREA (ACCELERATION LANE) TREATMENT

DETAIL 36B

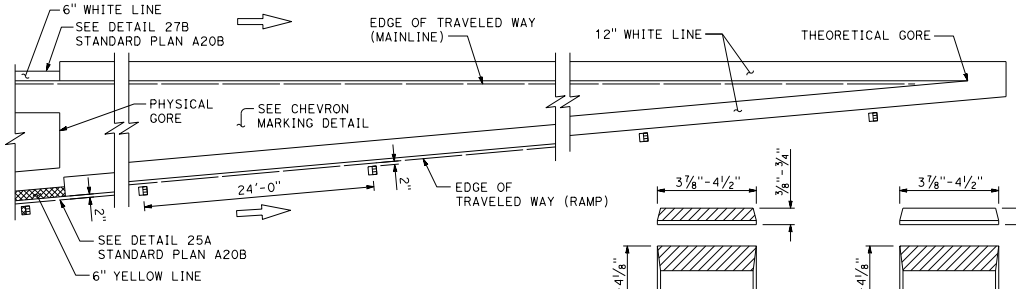

CHEVRON PAVEMENT MARKINGS AT ENTRANCE RAMP GORE AREA

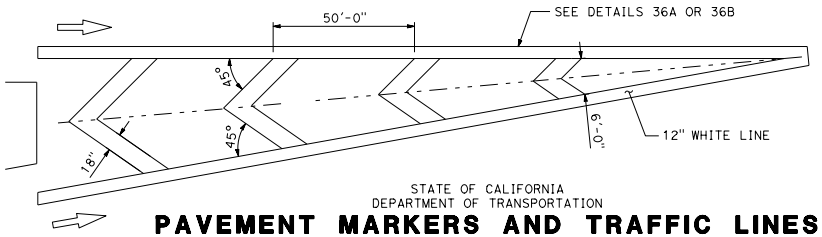

LEGEND:

- TYPE C RED-CLEAR RETROREFLECTIVE MARKER
- TYPE G ONE-WAY CLEAR RETROREFLECTIVE MARKER
- TYPE RY RED-YELLOW RETROREFLECTIVE MARKER

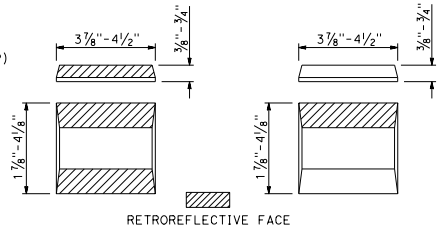

MARKER DETAILS

STATE OF CALIFORNIA
DEPARTMENT OF TRANSPORTATION

PAVEMENT MARKERS AND TRAFFIC LINES TYPICAL DETAILS

NO SCALE

A20C

2026 STANDARD PLAN A20C

7-1-26

Return to Table of Contents

Dist	COUNTY	ROUTE	POST MILES TOTAL PROJECT	SHEET No.	TOTAL SHEETS

REGISTERED CIVIL ENGINEER

September 18, 2026
PLANS APPROVAL DATE

REGISTERED PROFESSIONAL ENGINEER Mike Maiyy No. C83437 Exp. 3-31-27 CIVIL STATE OF CALIFORNIA

THE STATE OF CALIFORNIA OR ITS OFFICERS OR AGENTS SHALL NOT BE RESPONSIBLE FOR THE ACCURACY OR COMPLETENESS OF SCANNED COPIES OF THIS PLAN SHEET.

CHANNELIZING LINE

DETAIL 38

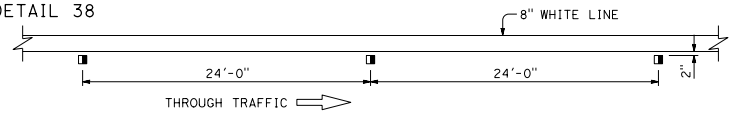

DETAIL 38A

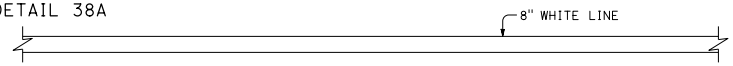

DETAIL 38B

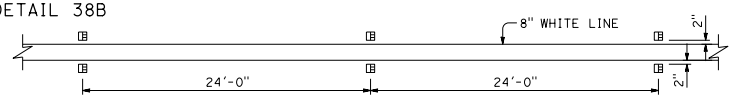

~~DETAIL 38C~~ DETAIL 38C DELETED

DETAIL 38D
EXIT RAMPS ONLY

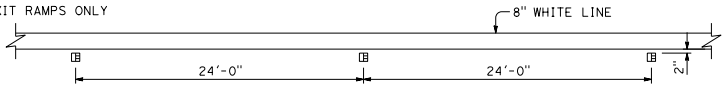

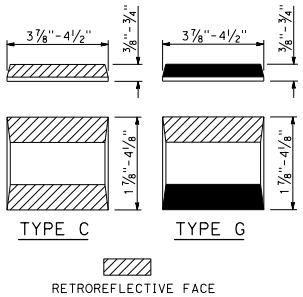

MARKER DETAILS

BIKE LANE LINE

DETAIL 39

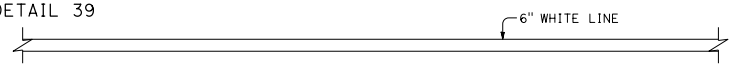

INTERSECTION LINE
BIKE LANE

DETAIL 39A

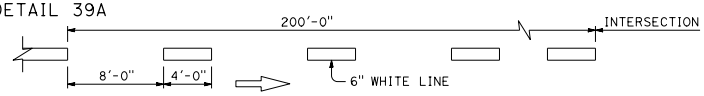

LANE LINE EXTENSIONS THROUGH INTERSECTIONS

DETAIL 40

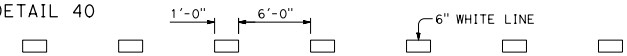

~~DETAIL 40A~~ DETAIL 40A DELETED

CENTERLINE EXTENSIONS THROUGH INTERSECTIONS

DETAIL 41

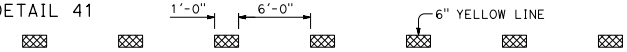

~~DETAIL 41A~~ DETAIL 41A DELETED

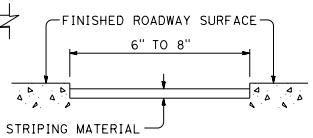

DETAIL FOR RECESSED TRAFFIC STRIPE

See Notes A and B

RECESSED NOTES:

A. See typical traffic line details for pavement marking patterns.

B. See Standard Specifications for recess depth and recess striping material thickness.

LEGEND:

- TYPE C RED-CLEAR RETROREFLECTIVE MARKER
- TYPE G ONE-WAY CLEAR RETROREFLECTIVE MARKER
- 6" YELLOW LINE

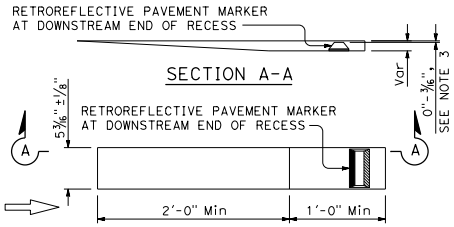

PLAN
TYPE 1
See Note 5

NOTE:
Pavement markers shown off the solid line may be placed on the line.

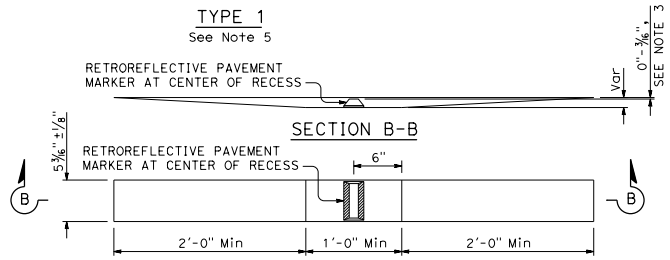

PLAN
TYPE 2

RECESS DETAIL FOR RETROREFLECTIVE PAVEMENT MARKER

See Note 4

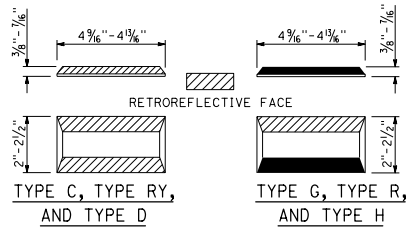

RETROREFLECTIVE PAVEMENT MARKER FOR RECESSED INSTALLATION

See Notes 1 and 2

RECESSED MARKER NOTES:

1. See typical traffic line details for marker patterns to be used with recessed pavement markers.
2. The retroreflective pavement markers shown for recessed installations are not to be used for non-recessed installations.
3. The top of pavement markers installed in recesses shall be 0" to 3/16" below the pavement surface.
4. Use Type 1 recess for pavement markers with one-way retroreflective face. Use Type 2 recess for pavement markers with two-way retroreflective face.
5. For exit ramps, use Type 1 recess for Type R markers with one-way retroreflective face. Reverse the orientation of the recess and place the marker at the upstream end of the recess.

STATE OF CALIFORNIA
DEPARTMENT OF TRANSPORTATION

PAVEMENT MARKERS AND TRAFFIC LINES TYPICAL DETAILS

NO SCALE

A20D

2026 STANDARD PLAN A20D

7-1-26

Return to Table of Contents

Dist	COUNTY	ROUTE	POST MILES TOTAL PROJECT	SHEET No.	TOTAL SHEETS

REGISTERED CIVIL ENGINEER

September 18, 2026
PLANS APPROVAL DATE

REGISTERED PROFESSIONAL ENGINEER
Mike Maiyy
No. C83437
Exp. 3-31-27
CIVIL
STATE OF CALIFORNIA

THE STATE OF CALIFORNIA OR ITS OFFICERS OR AGENTS SHALL NOT BE RESPONSIBLE FOR THE ACCURACY OR COMPLETENESS OF SCANNED COPIES OF THIS PLAN SHEET.

TYPICAL DOUBLE STRIPE CONTRAST DETAIL

NOTES:

1. See Standard Plans A20A, A20B, A20C, A20D, and A20F for traffic lines typical details.
2. Detail 9 Traffic stripe shown. See project plans for traffic stripe details.

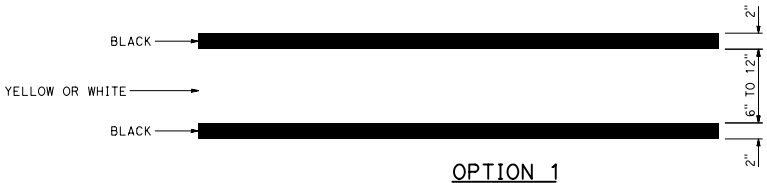

OPTION 1
TYPICAL LANE LINE OR EDGE LINE CONTRAST DETAIL

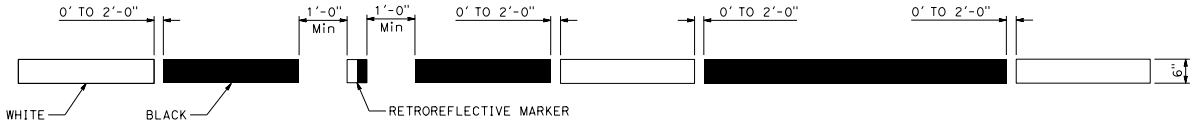

OPTION 2
TYPICAL LANE LINE CONTRAST DETAIL
See Note 2

STATE OF CALIFORNIA
DEPARTMENT OF TRANSPORTATION

TRAFFIC LINES
TYPICAL DETAILS
FOR CONTRAST STRIPING

NO SCALE

A20E

7-1-26

2026 STANDARD PLAN A20E

Return to Table of Contents

Dist	COUNTY	ROUTE	POST MILES TOTAL PROJECT	SHEET No.	TOTAL SHEETS

REGISTERED CIVIL ENGINEER

September 18, 2026
PLANS APPROVAL DATE

REGISTERED PROFESSIONAL ENGINEER
Mike Maiyy
No. C83437
Exp. 3-31-27
CIVIL
STATE OF CALIFORNIA

THE STATE OF CALIFORNIA OR ITS OFFICERS OR AGENTS SHALL NOT BE RESPONSIBLE FOR THE ACCURACY OR COMPLETENESS OF SCANNED COPIES OF THIS PLAN SHEET.

PREFERENTIAL LANE LINES

DETAIL 42

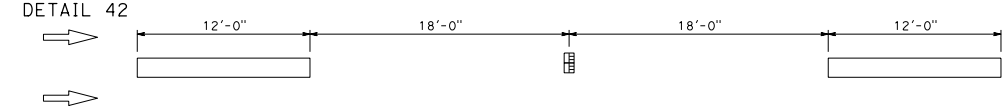

~~DETAIL 43~~ DETAIL 43 DELETED

~~DETAIL 43A~~ DETAIL 43A DELETED

DETAIL 44A

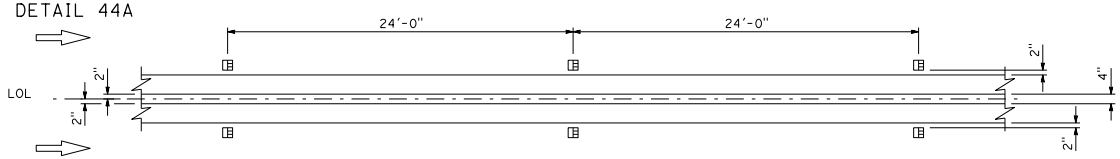

DETAIL 44B

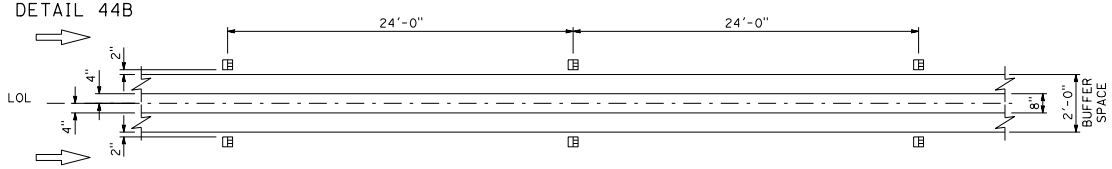

DETAIL 45

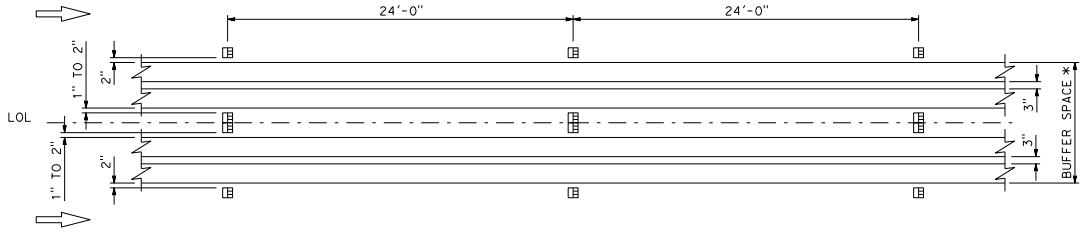

* See pavement delineation plan for dimension.

LEGEND:

- TYPE C RED-CLEAR RETROREFLECTIVE MARKER
- 8" WHITE LINE

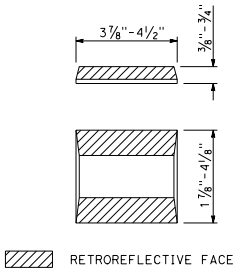

TYPE C
MARKER DETAILS

STATE OF CALIFORNIA
DEPARTMENT OF TRANSPORTATION

PAVEMENT MARKERS AND TRAFFIC LINES TYPICAL DETAILS

NO SCALE

A20F

2026 STANDARD PLAN A20F

7-1-26

Return to Table of Contents

Dist	COUNTY	ROUTE	POST MILES TOTAL PROJECT	SHEET No.	TOTAL SHEETS

REGISTERED CIVIL ENGINEER

September 18, 2026
PLANS APPROVAL DATE

REGISTERED PROFESSIONAL ENGINEER
Mike Malyy
No. C83437
Exp. 3-31-27
CIVIL
STATE OF CALIFORNIA

THE STATE OF CALIFORNIA OR ITS OFFICERS OR AGENTS SHALL NOT BE RESPONSIBLE FOR THE ACCURACY OR COMPLETENESS OF SCANNED COPIES OF THIS PLAN SHEET.

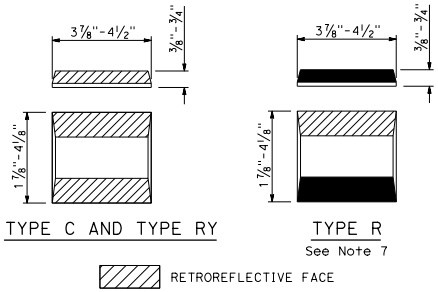

MARKER DETAILS

LEGEND:

MARKERS

- TYPE C TWO-WAY RED-CLEAR RETROREFLECTIVE MARKER
- TYPE RY TWO-WAY RED-YELLOW RETROREFLECTIVE MARKER
- TYPE R ONE-WAY RED RETROREFLECTIVE MARKER
- 6" WHITE LINE
- 6" YELLOW LINE

NOTES:

1. May be a limit line or crosswalk.
2. See Standard Plans A24F and A24G for crosswalk and pavement marker details.
3. For raised markers, place Type R one-way red retroreflective markers on outermost limit line or crosswalk line with red facing the intersection. For recessed markers, place Type R one-way retroreflective markers with red facing the intersection and as shown on Standard Plan A24G.
4. The distances and marker spacings may be adjusted based on site specific conditions, exit ramp geometry, or loop detectors.
5. See Standard Plan A20D for recess details.
6. See Standard Plan A24G for Type V arrow detail with Type R one-way red retroreflective markers.
7. The Type R marker body must be white in color.

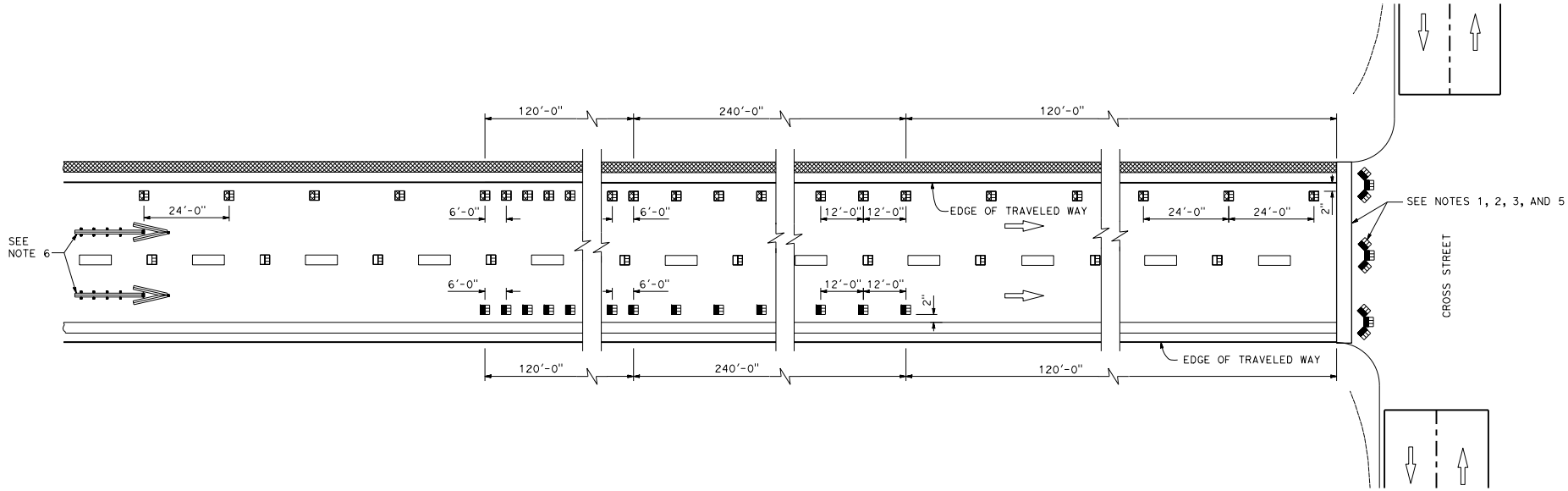

STATE OF CALIFORNIA
DEPARTMENT OF TRANSPORTATION

EXIT RAMP WITH ENHANCED PAVEMENT MARKERS FOR WRONG WAY DETAILS

NO SCALE

A20G

2026 STANDARD PLAN A20G

7-1-26

Return to Table of Contents

Dist	COUNTY	ROUTE	POST MILES TOTAL PROJECT	SHEET No.	TOTAL SHEETS

REGISTERED CIVIL ENGINEER

September 18, 2026

PLANS APPROVAL DATE

REGISTERED PROFESSIONAL ENGINEER Mike Malyy No. C83437 Exp. 3-31-27 CIVIL STATE OF CALIFORNIA

THE STATE OF CALIFORNIA OR ITS OFFICERS OR AGENTS SHALL NOT BE RESPONSIBLE FOR THE ACCURACY OR COMPLETENESS OF SCANNED COPIES OF THIS PLAN SHEET.

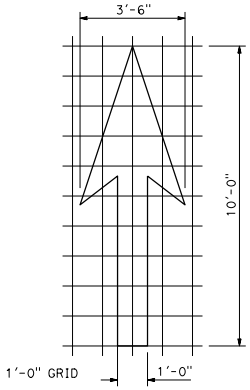

A=14 ft²

TYPE I 10'-0" ARROW

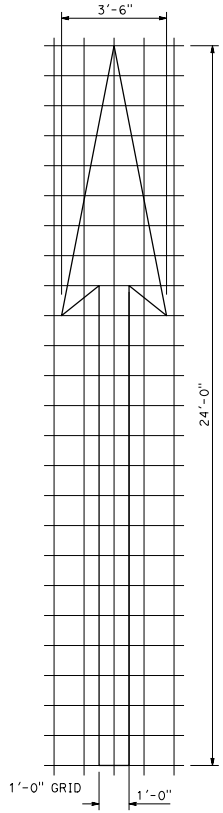

A=31 ft²

TYPE I 24'-0" ARROW

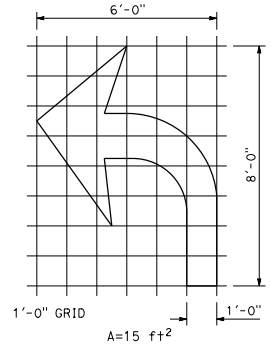

A=15 ft²

TYPE IV (L) ARROW

For Type IV (R) arrow, use mirror image.

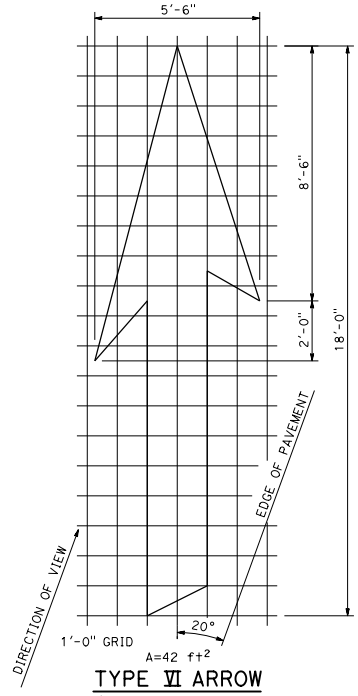

A=42 ft²

TYPE VI ARROW

Right lane drop arrow.
For left lane, use mirror image.

NOTE:

1. Minor variations in dimensions may be accepted by the Engineer.

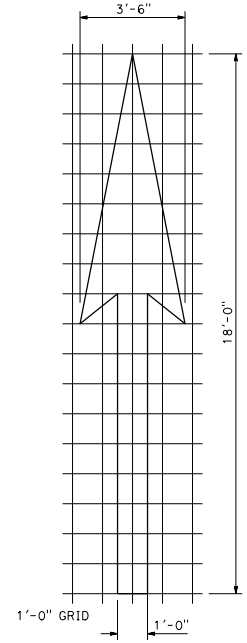

A=25 ft²

TYPE I 18'-0" ARROW

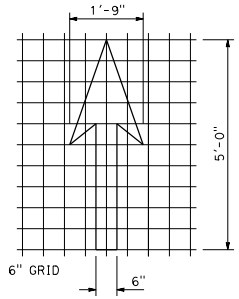

A=3.5 ft²

BIKE LANE ARROW

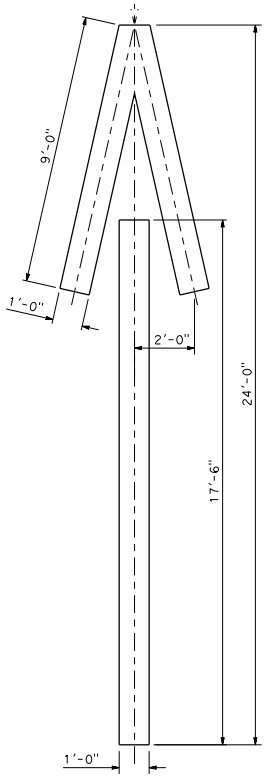

A=33 ft²

TYPE V ARROW

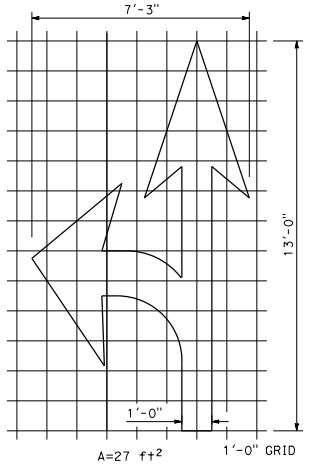

A=27 ft²

TYPE VII (L) ARROW

For Type VII (R) arrow, use mirror image.

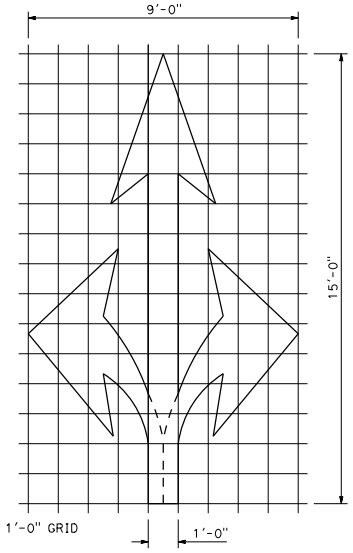

A=36 ft²

TYPE VIII ARROW

STATE OF CALIFORNIA
DEPARTMENT OF TRANSPORTATION

PAVEMENT MARKINGS ARROWS

NO SCALE

A24A

2026 STANDARD PLAN A24A

7-1-26

Return to Table of Contents

Dist	COUNTY	ROUTE	POST MILES TOTAL PROJECT	SHEET No.	TOTAL SHEETS

REGISTERED CIVIL ENGINEER

September 18, 2026
PLANS APPROVAL DATE

REGISTERED PROFESSIONAL ENGINEER
Mike Maiyy
No. C83437
Exp. 3-31-27
CIVIL
STATE OF CALIFORNIA

THE STATE OF CALIFORNIA OR ITS OFFICERS OR AGENTS SHALL NOT BE RESPONSIBLE FOR THE ACCURACY OR COMPLETENESS OF SCANNED COPIES OF THIS PLAN SHEET.

NOTE:

1. Minor variations in dimensions may be accepted by the Engineer.

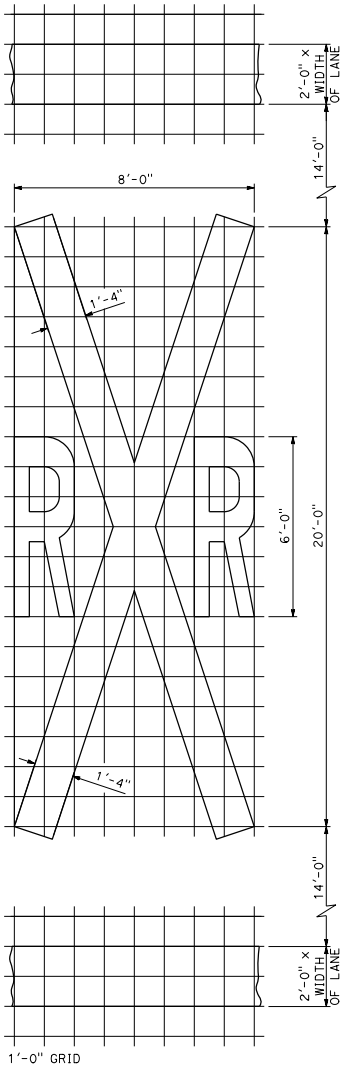

A=70 ft^2 *

RAILROAD CROSSING SYMBOL

*70 SQFT does not include the 2'-0" x variable width transverse lines.

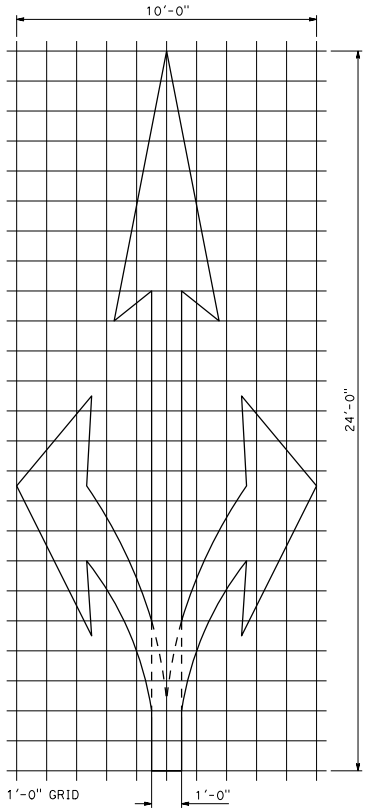

A=59 ft^2

TYPE II (B) ARROW

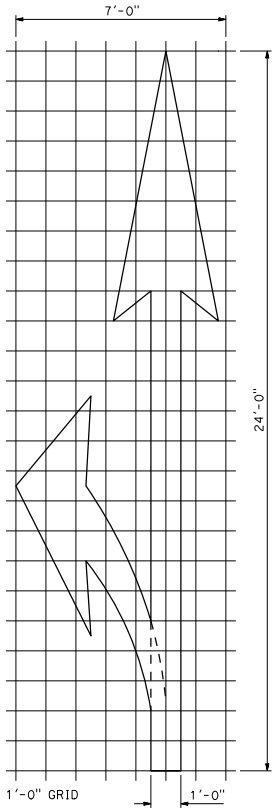

A=45 ft^2

TYPE II (L) ARROW

For Type II (R) use mirror image.

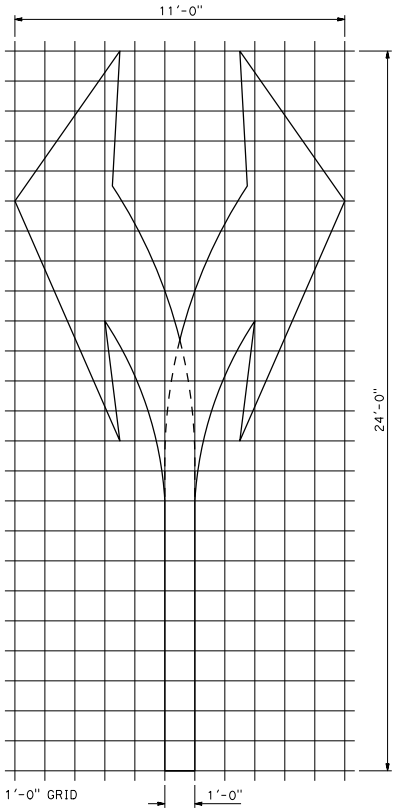

A=73 ft^2

TYPE III (B) ARROW

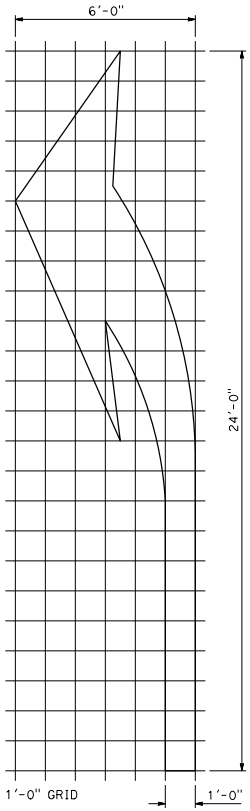

A=42 ft^2

TYPE III (L) ARROW

For Type III (R) use mirror image.

STATE OF CALIFORNIA
DEPARTMENT OF TRANSPORTATION

PAVEMENT MARKINGS
ARROWS AND SYMBOLS

NO SCALE

A24B

2026 STANDARD PLAN A24B

7-1-26

Return to Table of Contents

Dist	COUNTY	ROUTE	POST MILES TOTAL PROJECT	SHEET No.	TOTAL SHEETS

REGISTERED CIVIL ENGINEER

September 18, 2026
PLANS APPROVAL DATE

REGISTERED PROFESSIONAL ENGINEER
Mike Maiyy
No. C83437
Exp. 3-31-27
CIVIL
STATE OF CALIFORNIA

THE STATE OF CALIFORNIA OR ITS OFFICERS OR AGENTS SHALL NOT BE RESPONSIBLE FOR THE ACCURACY OR COMPLETENESS OF SCANNED COPIES OF THIS PLAN SHEET.

NOTE:

1. Minor variations in dimensions may be accepted by the Engineer.

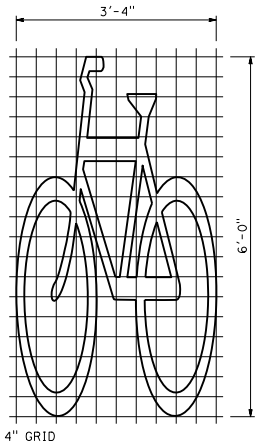

A=7 ft^2

BIKE LANE SYMBOL WITHOUT PERSON

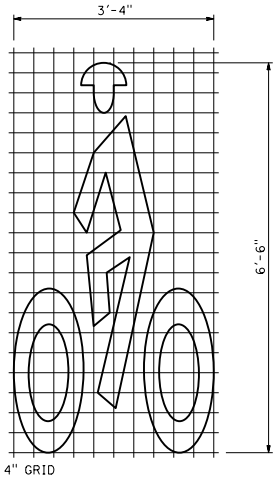

A=7 ft^2

BIKE LANE SYMBOL WITH PERSON

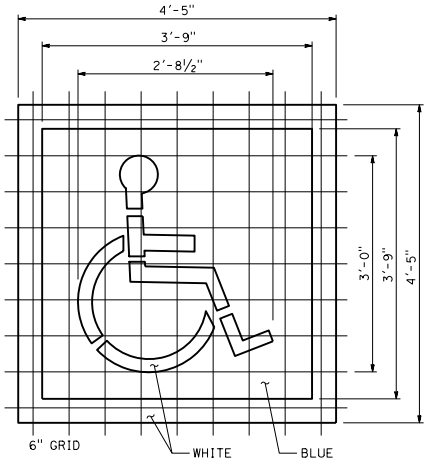

A=9 ft^2 (WHITE)
A=14 ft^2 (BLUE)

INTERNATIONAL SYMBOL OF ACCESSIBILITY (ISA) MARKING

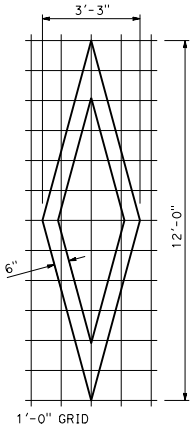

A=11 ft^2

DIAMOND SYMBOL

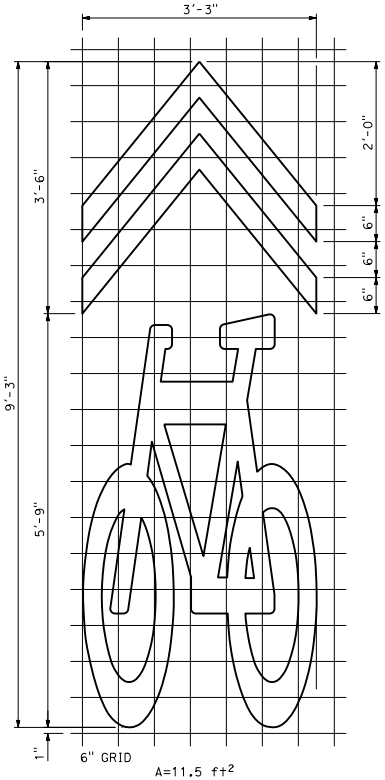

A=11.5 ft^2

SHARED ROADWAY BICYCLE MARKING

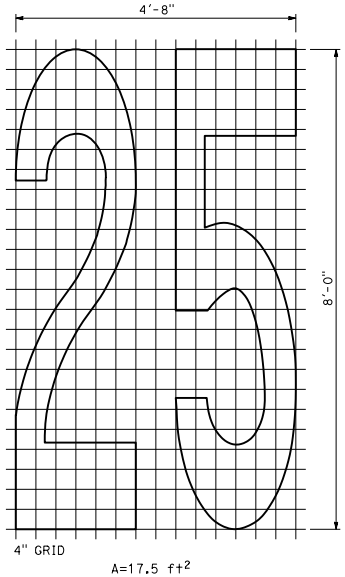

A=17.5 ft^2

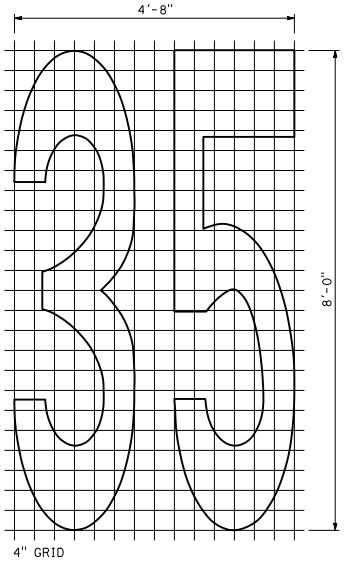

A=16.5 ft^2

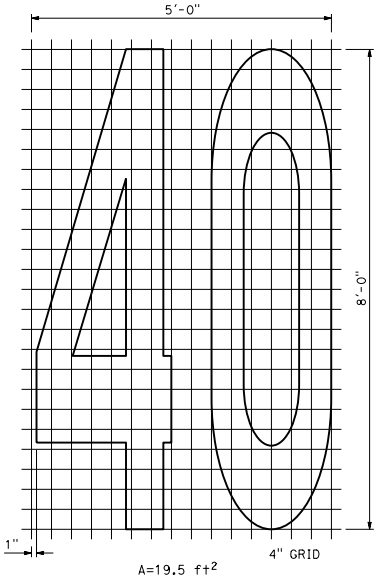

A=19.5 ft^2

NUMERALS

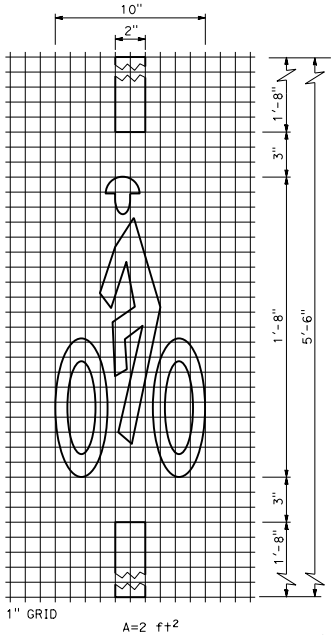

A=2 ft^2

BICYCLE LOOP DETECTOR SYMBOL

STATE OF CALIFORNIA
DEPARTMENT OF TRANSPORTATION

PAVEMENT MARKINGS SYMBOLS AND NUMERALS

NO SCALE

A24C

2026 STANDARD PLAN A24C

7-1-26

Return to Table of Contents

Dist	COUNTY	ROUTE	POST MILES TOTAL PROJECT	SHEET No.	TOTAL SHEETS

REGISTERED CIVIL ENGINEER

September 18, 2026
PLANS APPROVAL DATE

REGISTERED PROFESSIONAL ENGINEER
Mike Malyy
No. C83437
Exp. 3-31-27
CIVIL
STATE OF CALIFORNIA

THE STATE OF CALIFORNIA OR ITS OFFICERS OR AGENTS SHALL NOT BE RESPONSIBLE FOR THE ACCURACY OR COMPLETENESS OF SCANNED COPIES OF THIS PLAN SHEET.

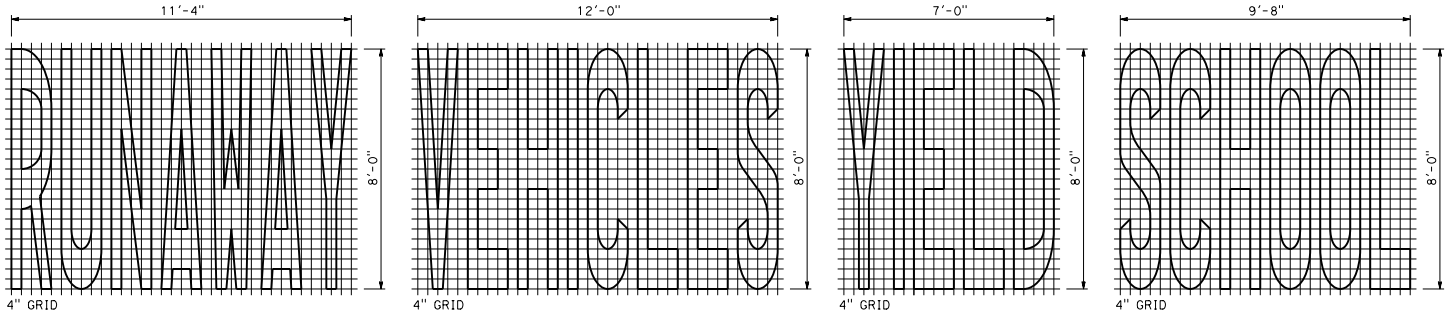

NOTES:

1. If a message consists of more than one word, it must read "UP", i.e., the first word must be nearest the driver.
2. The space between words must be at least four times the height of the characters for low speed roads, but not more than ten times the height of the characters. The space may be reduced appropriately where there is limited space because of local conditions.
3. Minor variations in dimensions may be accepted by the Engineer.
4. Portions of a letter, number or symbol may be separated by connecting segments not to exceed 2" in width.

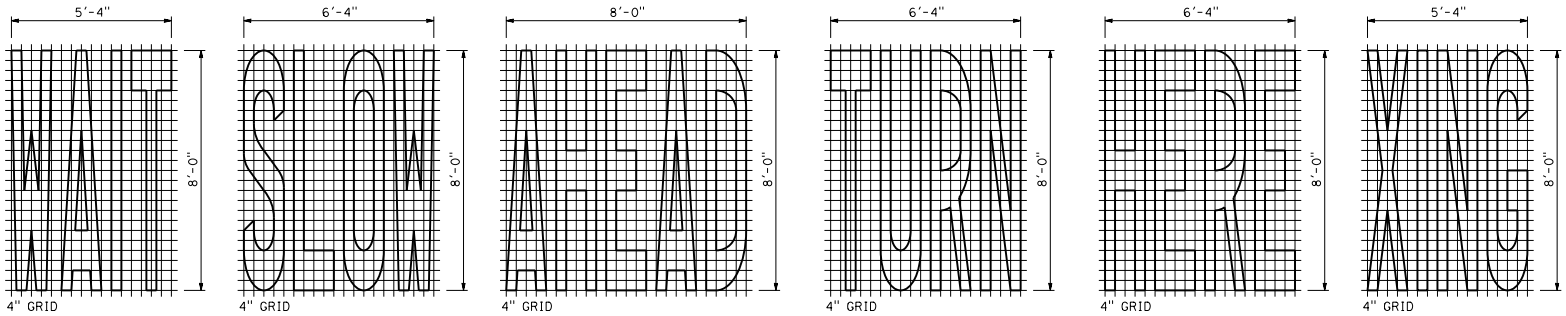

WORD MARKINGS			
ITEM	ft²	ITEM	ft²
RUNAWAY	43	VEHICLES	42
YIELD	24	SCHOOL	35
WAIT	19	SLOW	23
AHEAD	31	TURN	24
HERE	26	XING	21
SIGNAL	32	LEFT	19
RIGHT	26	STOP	22
PED	18	COMPACT	10
BIKE	5	LANE	6

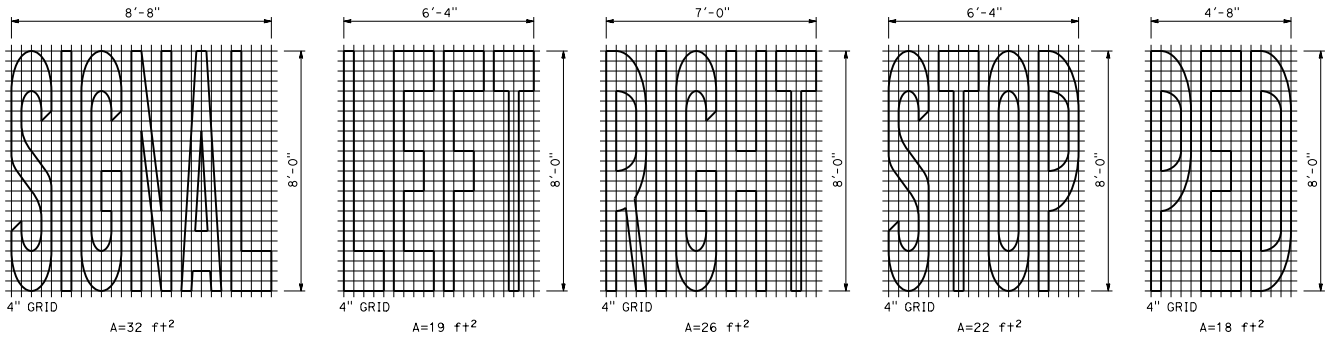

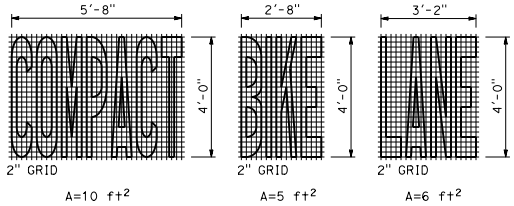

STATE OF CALIFORNIA
DEPARTMENT OF TRANSPORTATION

PAVEMENT MARKINGS WORDS

NO SCALE

A24D

7-1-26

2026 STANDARD PLAN A24D

Return to Table of Contents

Dist	COUNTY	ROUTE	POST MILES TOTAL PROJECT	SHEET No.	TOTAL SHEETS

REGISTERED CIVIL ENGINEER

September 18, 2026
PLANS APPROVAL DATE

REGISTERED PROFESSIONAL ENGINEER
Mike Malyy
No. C83437
Exp. 3-31-27
CIVIL
STATE OF CALIFORNIA

THE STATE OF CALIFORNIA OR ITS OFFICERS OR AGENTS SHALL NOT BE RESPONSIBLE FOR THE ACCURACY OR COMPLETENESS OF SCANNED COPIES OF THIS PLAN SHEET.

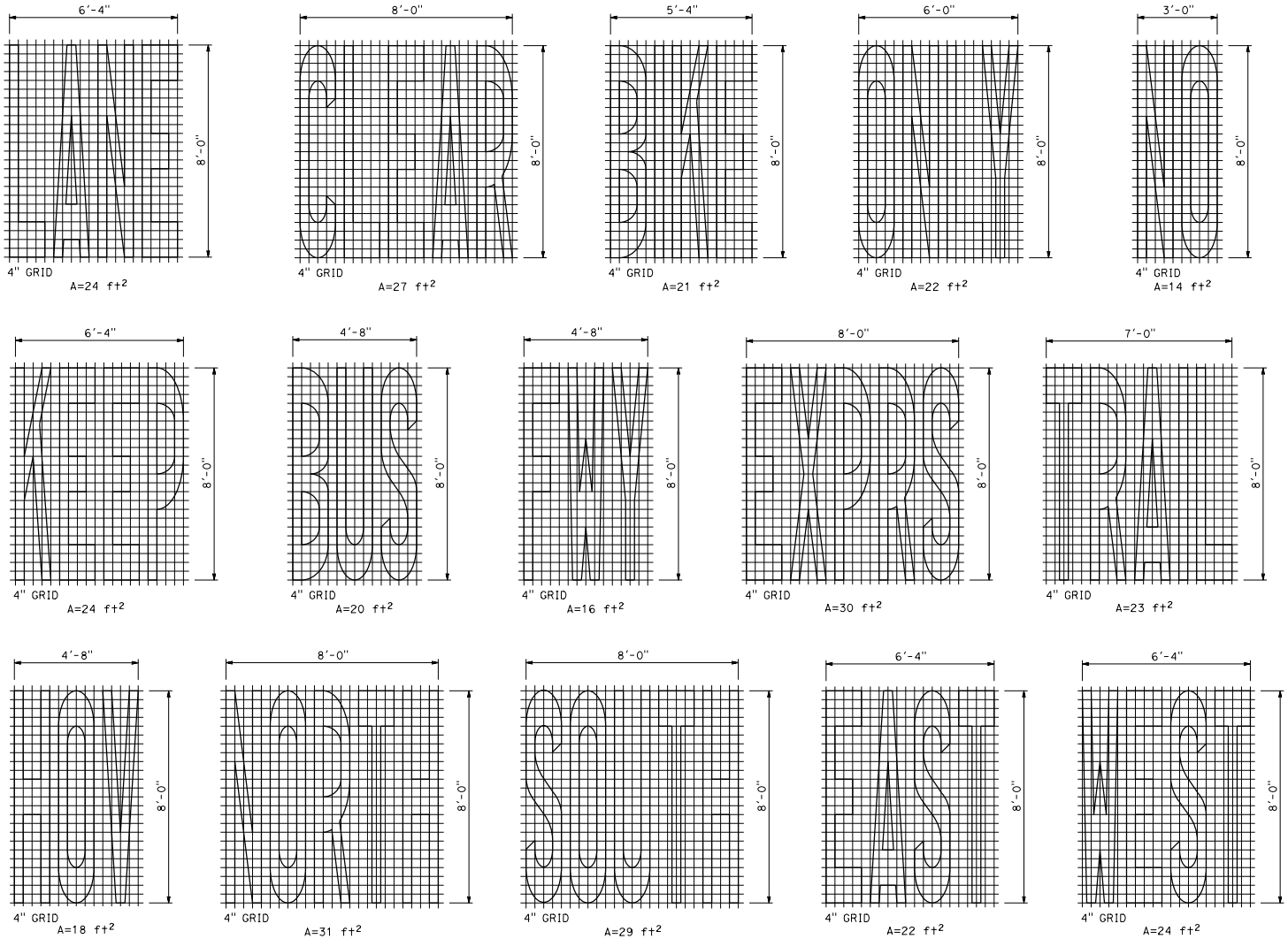

NOTES:

1. If a message consists of more than one word, it must read "UP",i.e., the first word must be nearest the driver.
2. The space between words must be at least four times the height of the characters for low speed roads, but not more than ten times the height of the characters. The space may be reduced appropriately where there is limited space because of local conditions.
3. Minor variations in dimensions may be accepted by the Engineer.
4. Portions of a letter, number, or symbol may be separated by connecting segments not to exceed 2" in width.
5. The words "NO PARKING" pavement marking is to be used for parking facilities. For typical locations of markings, see Standard Plans A90A and A90B.
6. The words "NO PARKING", shall be painted in white letters no less than 1'-0" high on a contrasting background and located so that it is visible to traffic enforcement officials.

WORD MARKINGS

ITEM	SQFT	ITEM	SQFT	ITEM	SQFT
LANE	24	CLEAR	27	BIKE	21
ONLY	22	NO	14	KEEP	24
BUS	20	FWY	16	EXPRS	30
TRAIL	23	HOV	18	NORTH	31
SOUTH	29	EAST	22	WEST	24
NO PARKING	2				

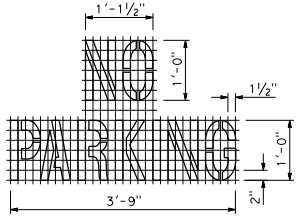

A=2 ft²
See Notes 5 and 6

STATE OF CALIFORNIA
DEPARTMENT OF TRANSPORTATION

PAVEMENT MARKINGS WORDS

NO SCALE

A24E

2026 STANDARD PLAN A24E

7-1-26

Return to Table of Contents

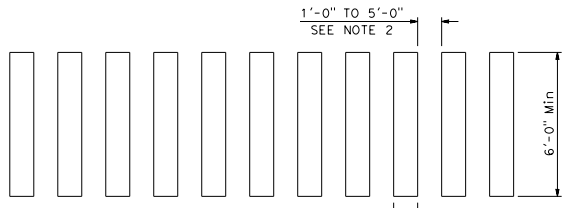

CONTINENTAL
See Note 1

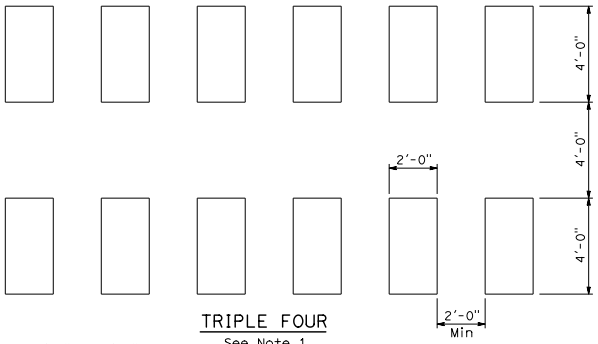

TRIPLE FOUR
See Note 1

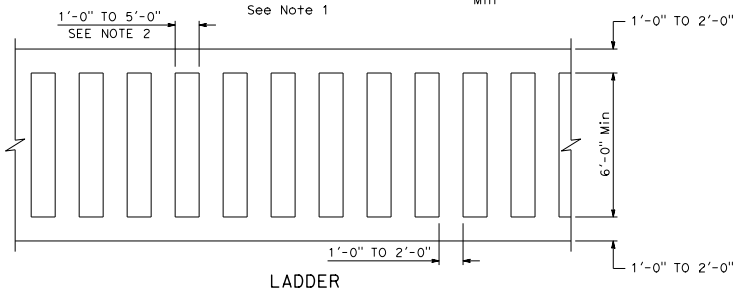

LADDER

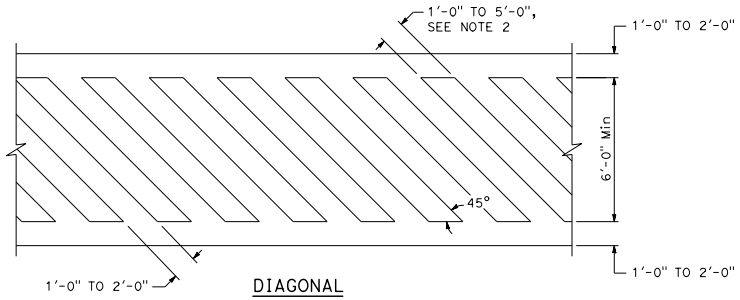

DIAGONAL

HIGHER VISIBILITY CROSSWALKS

Dist	COUNTY	ROUTE	POST MILES TOTAL PROJECT	SHEET No.	TOTAL SHEETS

REGISTERED CIVIL ENGINEER

September 18, 2026
PLANS APPROVAL DATE

REGISTERED PROFESSIONAL ENGINEER
Mike Maiyy
No. C83437
Exp. 3-31-27
CIVIL
STATE OF CALIFORNIA

THE STATE OF CALIFORNIA OR ITS OFFICERS OR AGENTS SHALL NOT BE RESPONSIBLE FOR THE ACCURACY OR COMPLETENESS OF SCANNED COPIES OF THIS PLAN SHEET.

NOTES:

1. Spaces between markings must be placed in wheel tracks of each lane.
2. Spacings not to exceed 2.5 times width of longitudinal line.
3. All crosswalk markings must be white except those near schools must be yellow.

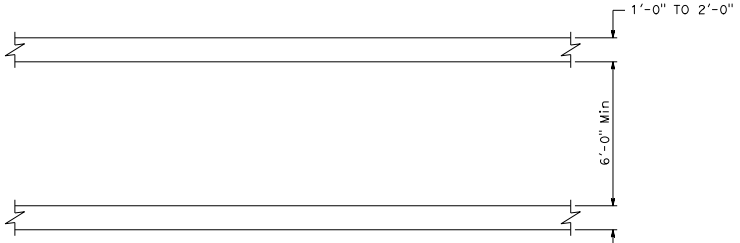

BASIC

STATE OF CALIFORNIA
DEPARTMENT OF TRANSPORTATION

PAVEMENT MARKINGS
CROSSWALKS

NO SCALE

A24F

2026 STANDARD PLAN A24F

7-1-26

Return to Table of Contents

Dist	COUNTY	ROUTE	POST MILES TOTAL PROJECT	SHEET No.	TOTAL SHEETS

REGISTERED CIVIL ENGINEER

September 18, 2026
PLANS APPROVAL DATE

REGISTERED PROFESSIONAL ENGINEER
Mike Malyy
No. C83437
Exp. 3-31-27
CIVIL
STATE OF CALIFORNIA

THE STATE OF CALIFORNIA OR ITS OFFICERS OR AGENTS SHALL NOT BE RESPONSIBLE FOR THE ACCURACY OR COMPLETENESS OF SCANNED COPIES OF THIS PLAN SHEET.

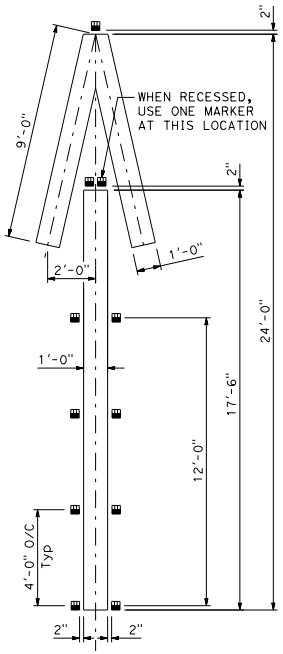

A=33 ft²

TYPE V ARROW AT EXIT RAMP

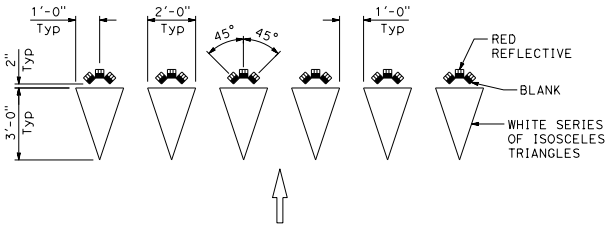

YIELD LINE AT EXIT RAMP

(Markers are not recessed)

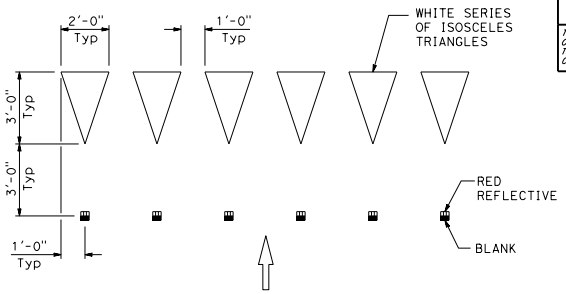

YIELD LINE AT EXIT RAMP

(Markers are recessed)

LEGEND:

TYPE R ONE-WAY RED RETROREFLECTIVE MARKER

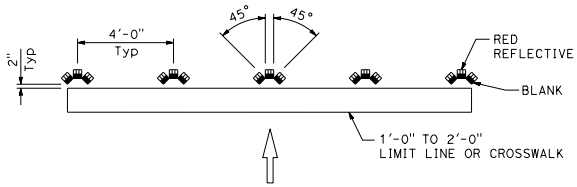

LIMIT LINE (STOP LINE) AT EXIT RAMP

(Markers are not recessed)

NOTE:

1. If there is crosswalk at the end of the exit ramp, place Type R markers in front of the first line for wrong way vehicle that travels up the ramp with the red reflective side facing the intersection.

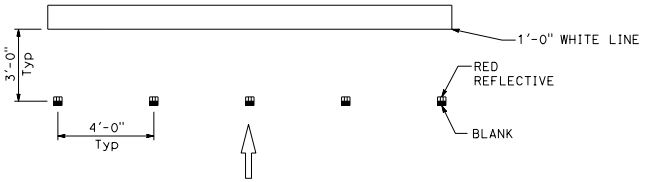

LIMIT LINE (STOP LINE) AT EXIT RAMP

(Markers are recessed)

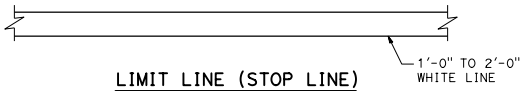

LIMIT LINE (STOP LINE)

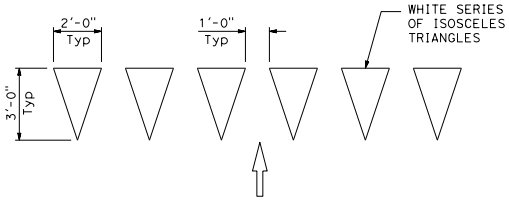

YIELD LINE

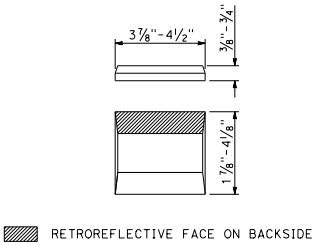

TYPE R

MARKER DETAILS

STATE OF CALIFORNIA
DEPARTMENT OF TRANSPORTATION

PAVEMENT MARKINGS YIELD LINES, LIMIT LINES, AND WRONG WAY DETAILS

NO SCALE

A24G

2026 STANDARD PLAN A24G

7-1-26

Return to Table of Contents

Dist	COUNTY	ROUTE	POST MILES TOTAL PROJECT	SHEET No.	TOTAL SHEETS

REGISTERED CIVIL ENGINEER

September 18, 2026
PLANS APPROVAL DATE

REGISTERED PROFESSIONAL ENGINEER
Mike Malyy
No. C83437
Exp. 3-31-27
CIVIL
STATE OF CALIFORNIA

THE STATE OF CALIFORNIA OR ITS OFFICERS OR AGENTS SHALL NOT BE RESPONSIBLE FOR THE ACCURACY OR COMPLETENESS OF SCANNED COPIES OF THIS PLAN SHEET.

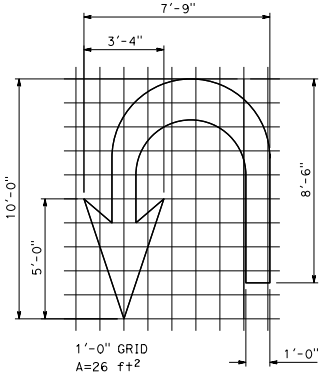

TYPE IX ARROW
U-TURN ARROW

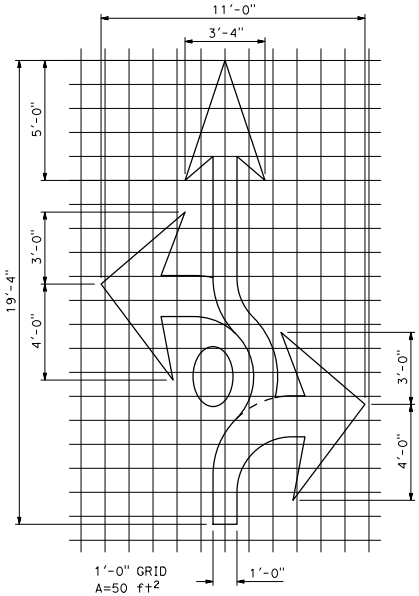

TYPE FH I ARROW

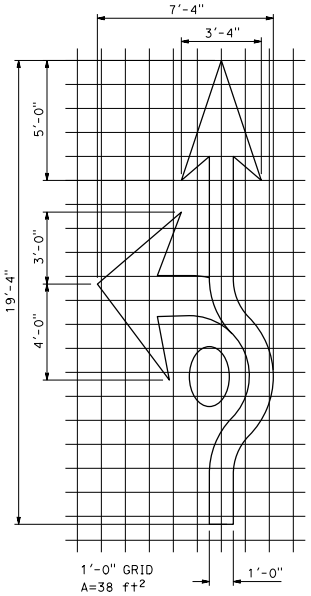

TYPE FH II ARROW

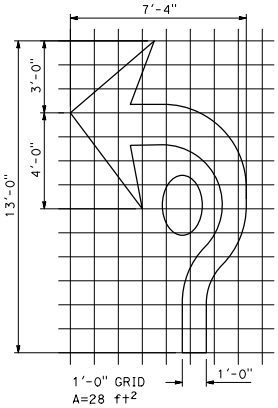

TYPE FH IV ARROW

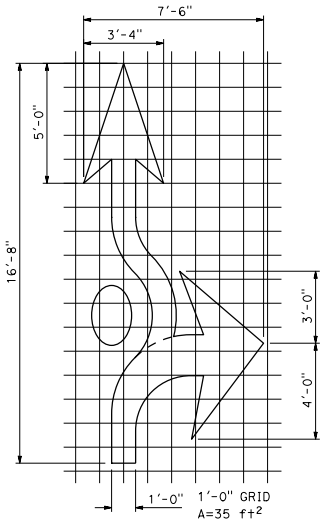

TYPE FH III ARROW
OPTIONAL LANE USE CIRCULAR ARROWS

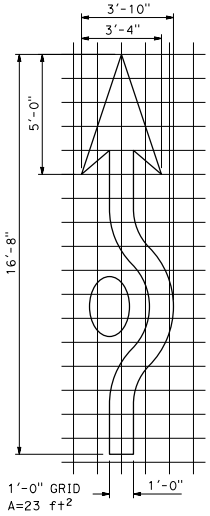

TYPE FH V ARROW
MANDATORY LANE USE CIRCULAR ARROWS

STATE OF CALIFORNIA
DEPARTMENT OF TRANSPORTATION

PAVEMENT MARKINGS ARROWS

NO SCALE

2026 STANDARD PLAN A24H

A24H

7-1-26

Return to Table of Contents

Dist	COUNTY	ROUTE	POST MILES TOTAL PROJECT	SHEET No.	TOTAL SHEETS

REGISTERED CIVIL ENGINEER

September 18, 2026
PLANS APPROVAL DATE

REGISTERED PROFESSIONAL ENGINEER
Mike Malyy
No. C83437
Exp. 3-31-27
CIVIL
STATE OF CALIFORNIA

THE STATE OF CALIFORNIA OR ITS OFFICERS OR AGENTS SHALL NOT BE RESPONSIBLE FOR THE ACCURACY OR COMPLETENESS OF SCANNED COPIES OF THIS PLAN SHEET.

NOTE:

1. Install white "X" pavement marking at each end of the section if the markings are less than 1 mile apart.

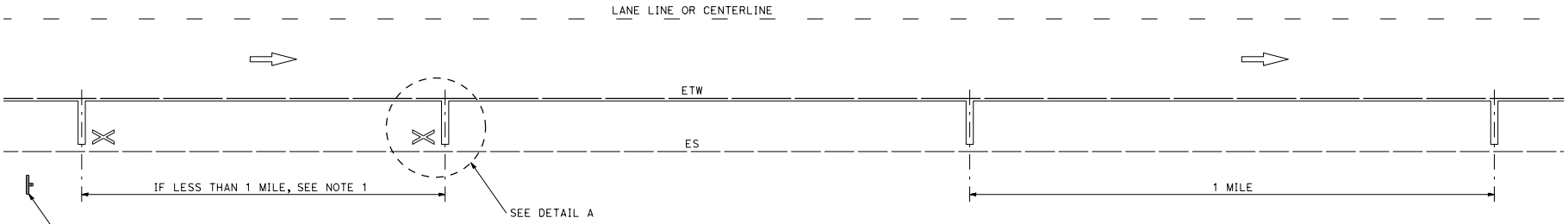

PLAN

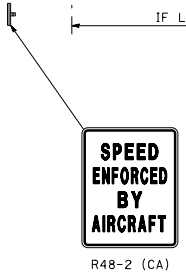

R48-2 (CA)

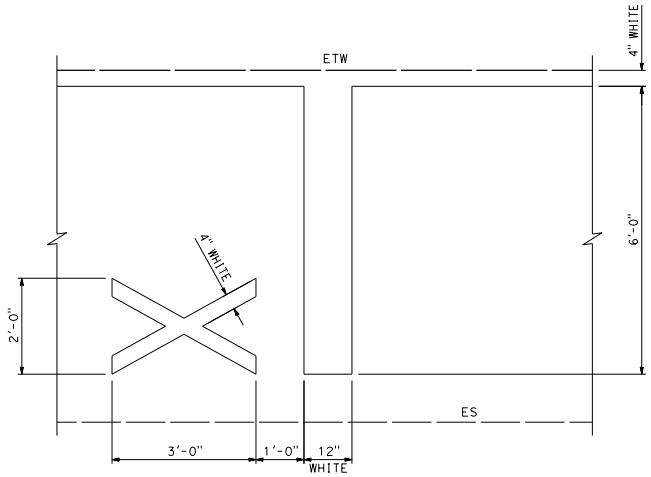

DETAIL A

STATE OF CALIFORNIA
DEPARTMENT OF TRANSPORTATION

PAVEMENT MARKINGS SPEED MEASUREMENT

NO SCALE

A24J

7-1-26

2026 STANDARD PLAN A24J

Return to Table of Contents

Dist	COUNTY	ROUTE	POST MILES TOTAL PROJECT	SHEET No.	TOTAL SHEETS

REGISTERED CIVIL ENGINEER

September 18, 2026

PLANS APPROVAL DATE

REGISTERED PROFESSIONAL ENGINEER Mike Malyy No. C83437 Exp. 3-31-27 CIVIL STATE OF CALIFORNIA

THE STATE OF CALIFORNIA OR ITS OFFICERS OR AGENTS SHALL NOT BE RESPONSIBLE FOR THE ACCURACY OR COMPLETENESS OF SCANNED COPIES OF THIS PLAN SHEET.

NOTES:

1. L=WS, where W is the offset in feet and S is bicycle approach speed in mph.
2. Provide an additional foot of offset for a raised obstruction and use the formula L=(W+1)S for the taper length.
3. See Standard Plan A20D for Detail 39.
4. Use markings only when there is 5'-0" of clear space.

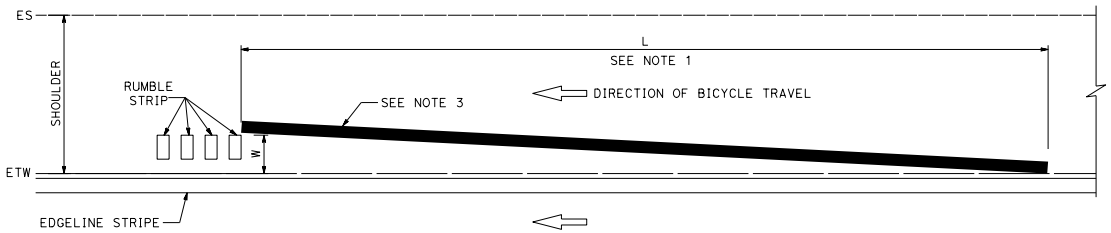

FLYING WEDGE STRIPE

Placed at beginning of rumble strip at right shoulder only.

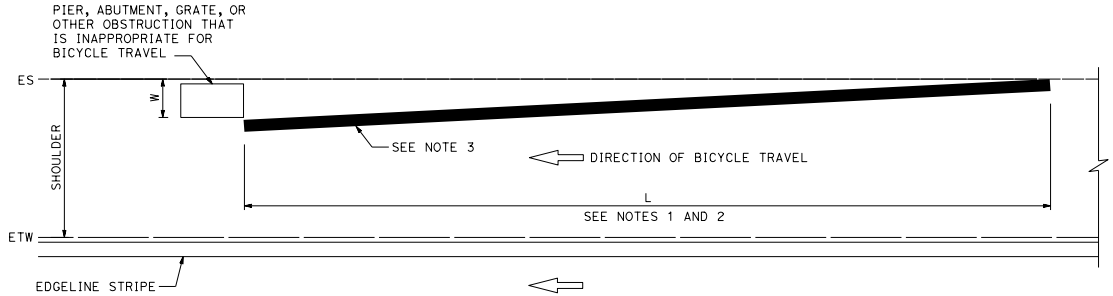

FLYING WEDGE STRIPE

Placed at obstruction.

STATE OF CALIFORNIA
DEPARTMENT OF TRANSPORTATION

PAVEMENT MARKINGS
BICYCLE OBSTRUCTION MARKINGS

NO SCALE

A24K

2026 STANDARD PLAN A24K

7-1-26

Return to Table of Contents

Dist	COUNTY	ROUTE	POST MILES TOTAL PROJECT	SHEET No.	TOTAL SHEETS

REGISTERED CIVIL ENGINEER

September 18, 2026
PLANS APPROVAL DATE

REGISTERED PROFESSIONAL ENGINEER
Mike Malyy
No. C83437
Exp. 3-31-27
CIVIL
STATE OF CALIFORNIA

THE STATE OF CALIFORNIA OR ITS OFFICERS OR AGENTS SHALL NOT BE RESPONSIBLE FOR THE ACCURACY OR COMPLETENESS OF SCANNED COPIES OF THIS PLAN SHEET.

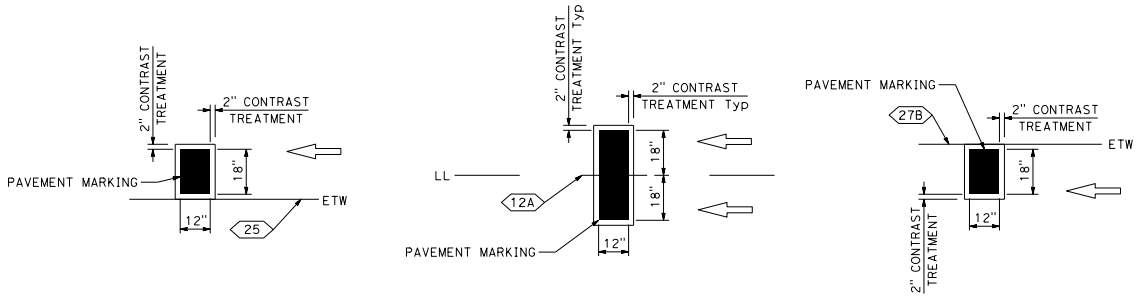

CONTRAST TREATMENT DETAILS

NOTES:

1. Exact location for speed reduction pavement markings will be determined by the Engineer.
2. Do not cover pavement markings.
3. Speed reduction markings are white. Contrast treatment is black.
4. Engineer to determine length and spacing based on approach and target speeds in the field.

LEGEND:

⇦ DIRECTION OF TRAVEL

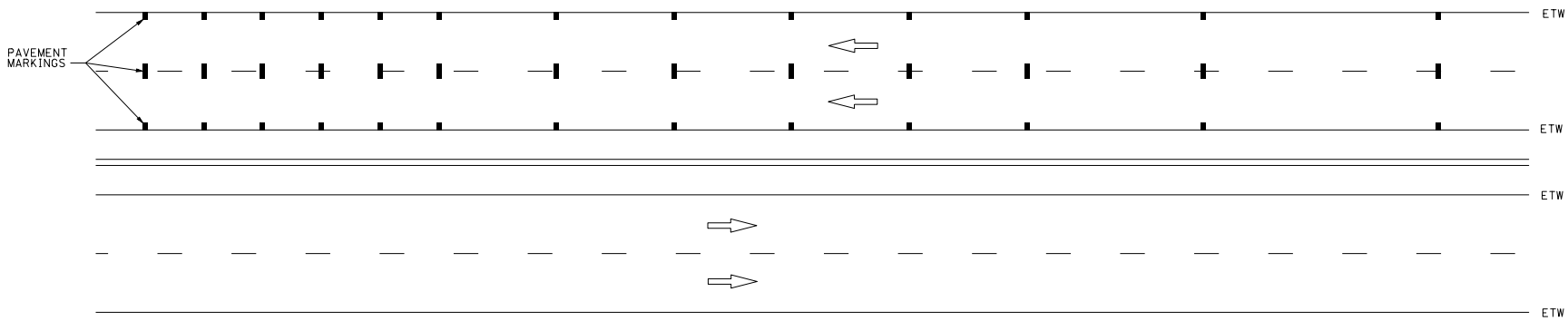

PLAN

STATE OF CALIFORNIA
DEPARTMENT OF TRANSPORTATION

PAVEMENT MARKINGS SPEED REDUCTION

NO SCALE

A24L

7-1-26

2026 STANDARD PLAN A24L

Return to Table of Contents

Dist	COUNTY	ROUTE	POST MILES TOTAL PROJECT	SHEET No.	TOTAL SHEETS

REGISTERED CIVIL ENGINEER

September 18, 2026

PLANS APPROVAL DATE

REGISTERED PROFESSIONAL ENGINEER Mike Malyy No. C83437 Exp. 3-31-27 CIVIL STATE OF CALIFORNIA

THE STATE OF CALIFORNIA OR ITS OFFICERS OR AGENTS SHALL NOT BE RESPONSIBLE FOR THE ACCURACY OR COMPLETENESS OF SCANNED COPIES OF THIS PLAN SHEET.

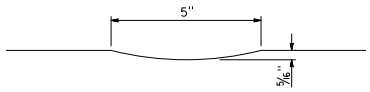

SECTION A-A

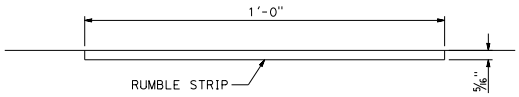

SECTION B-B

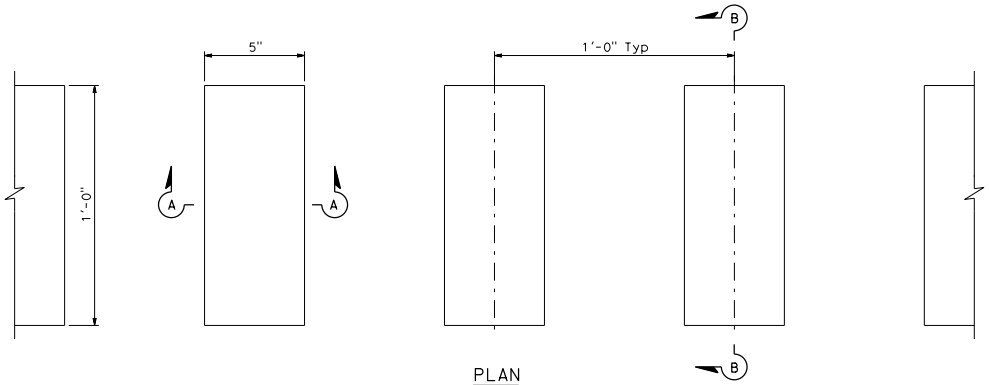

PLAN

GROUND-IN INDENTATIONS

NOTES:

1. Where bicycles are permitted, shoulder rumble strips should not be used right of direction of travel unless a minimum of 5'-0" of clear shoulder width for bicycle use is available between the rumble strip and the outer edge of the shoulder. Where bicycles are not permitted, a minimum of 4'-0" of distance is required between the rumble strip and the outer edge of the shoulder.

2. Unless otherwise shown on the plans or specified in the special provisions, the 6" offset from the edge of traveled way to the edge of the rumble strip shall be used for rumble strip placement right of the direction of travel.

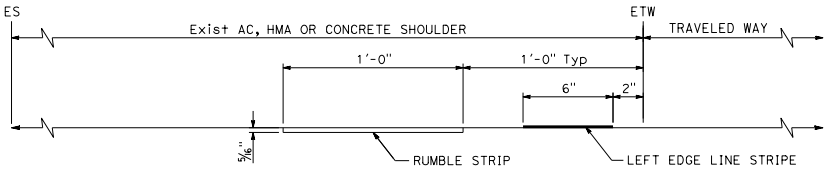

RUMBLE STRIP PLACEMENT
LEFT OF DIRECTION OF TRAVEL

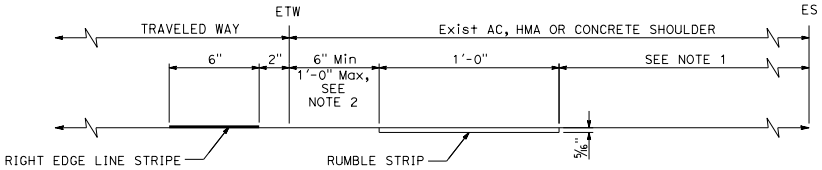

RUMBLE STRIP PLACEMENT
RIGHT OF DIRECTION OF TRAVEL

TYPICAL GROUND-IN RUMBLE STRIP
SHOULDER PLACEMENT

STATE OF CALIFORNIA
DEPARTMENT OF TRANSPORTATION

SHOULDER RUMBLE STRIP DETAILS
GROUND-IN INDENTATIONS

NO SCALE

A40B

7-1-26

2026 STANDARD PLAN A40B

Return to Table of Contents

Dist	COUNTY	ROUTE	POST MILES TOTAL PROJECT	SHEET No.	TOTAL SHEETS

REGISTERED CIVIL ENGINEER

September 18, 2026

PLANS APPROVAL DATE

REGISTERED PROFESSIONAL ENGINEER Mike Maiyy No. C83437 Exp. 3-31-27 CIVIL STATE OF CALIFORNIA

THE STATE OF CALIFORNIA OR ITS OFFICERS OR AGENTS SHALL NOT BE RESPONSIBLE FOR THE ACCURACY OR COMPLETENESS OF SCANNED COPIES OF THIS PLAN SHEET.

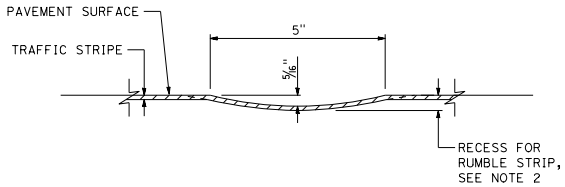

RECESSED STRIPE DETAIL

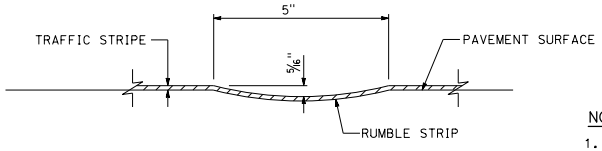

SURFACE STRIPE DETAIL

SECTION C-C

NOTES:

1. See Standard Plan A20D for recessed traffic stripe details.
2. Grind depth as necessary to result in 5/16" deep rumble strip after placing striping.
3. Limits of indentions with recessed stripe not shown.
4. See Standard Plan A40H for facilities where bicyclists are permitted.

LEGEND:

STRIPE MATERIAL

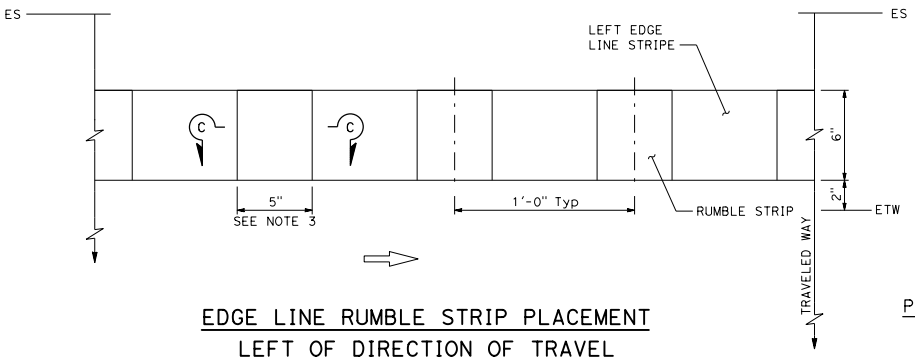

EDGE LINE RUMBLE STRIP PLACEMENT
LEFT OF DIRECTION OF TRAVEL

PLAN

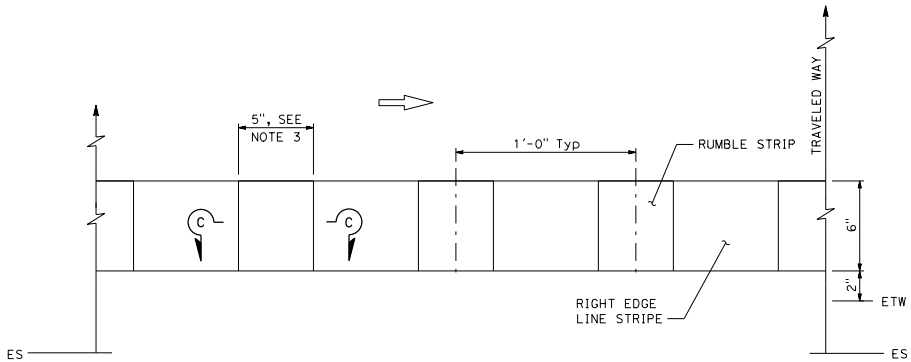

EDGE LINE RUMBLE STRIP PLACEMENT
RIGHT OF DIRECTION OF TRAVEL

TYPICAL EDGE LINE RUMBLE STRIP PLACEMENT

STATE OF CALIFORNIA
DEPARTMENT OF TRANSPORTATION

EDGE LINE RUMBLE STRIP DETAILS
GROUND-IN INDENTATIONS

NO SCALE

A40C

2026 STANDARD PLAN A40C

7-1-26

Return to Table of Contents

Dist	COUNTY	ROUTE	POST MILES TOTAL PROJECT	SHEET No.	TOTAL SHEETS

REGISTERED CIVIL ENGINEER

September 18, 2026
PLANS APPROVAL DATE

REGISTERED PROFESSIONAL ENGINEER
Mike Maiyy
No. C83437
Exp. 3-31-27
CIVIL
STATE OF CALIFORNIA

THE STATE OF CALIFORNIA OR ITS OFFICERS OR AGENTS SHALL NOT BE RESPONSIBLE FOR THE ACCURACY OR COMPLETENESS OF SCANNED COPIES OF THIS PLAN SHEET.

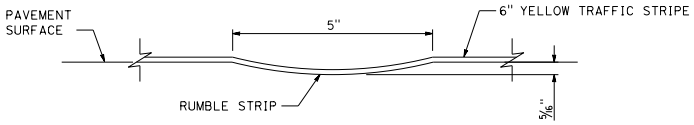

SECTION A-A

NOTE:
Detail 21 and Detail 5 traffic stripes shown, see project plans for traffic stripe details.

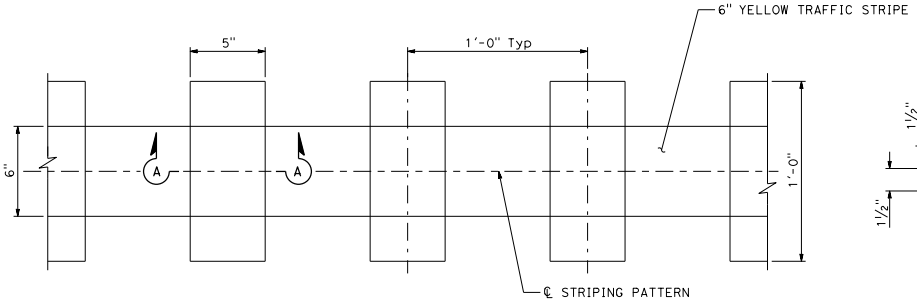

PLAN

RUMBLE STRIP PLACEMENT IN PASSING ZONE

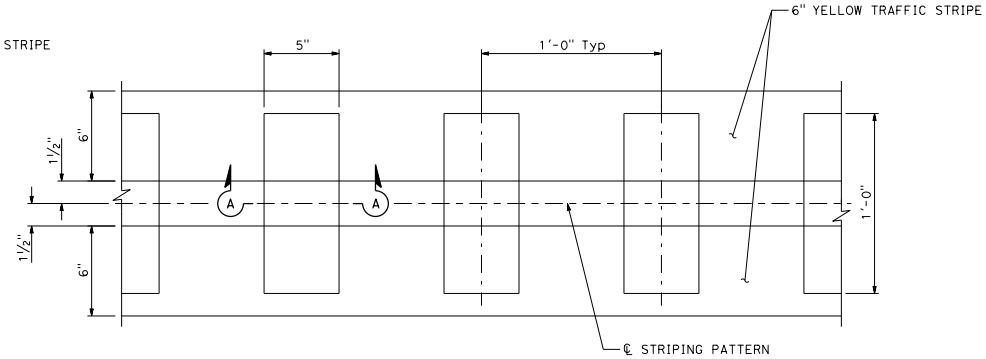

PLAN

RUMBLE STRIP PLACEMENT IN NO PASSING ZONE

TYPICAL CENTER LINE RUMBLE STRIP PLACEMENT

STATE OF CALIFORNIA
DEPARTMENT OF TRANSPORTATION

CENTER LINE RUMBLE STRIP DETAILS
GROUND-IN INDENTATIONS

NO SCALE

A40D

2026 STANDARD PLAN A40D

7-1-26

Return to Table of Contents

Dist	COUNTY	ROUTE	POST MILES TOTAL PROJECT	SHEET No.	TOTAL SHEETS

REGISTERED CIVIL ENGINEER

September 18, 2026
PLANS APPROVAL DATE

REGISTERED PROFESSIONAL ENGINEER
Mike Malyy
No. C83437
Exp. 3-31-27
CIVIL
STATE OF CALIFORNIA

THE STATE OF CALIFORNIA OR ITS OFFICERS OR AGENTS SHALL NOT BE RESPONSIBLE FOR THE ACCURACY OR COMPLETENESS OF SCANNED COPIES OF THIS PLAN SHEET.

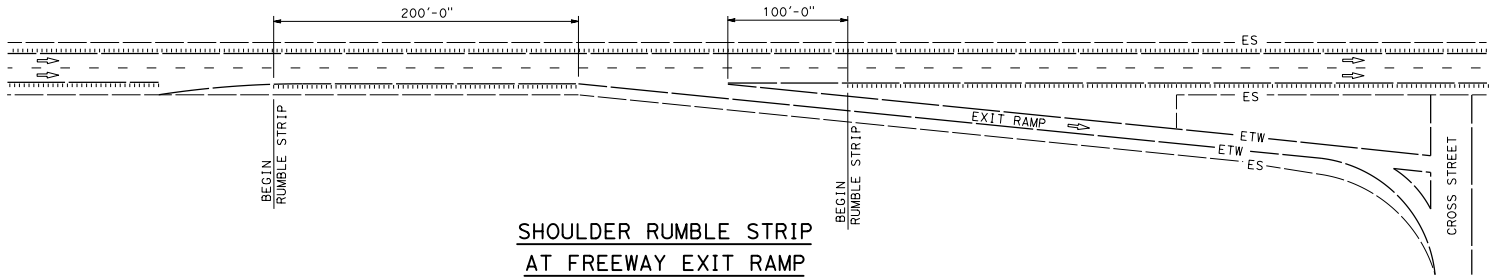

SHOULDER RUMBLE STRIP
AT FREEWAY EXIT RAMP

NOTE:

1. Lengthen to 200' when shoulder has an approach taper.

LEGEND:

''''''''''''' RUMBLE STRIP (GROUND-IN)

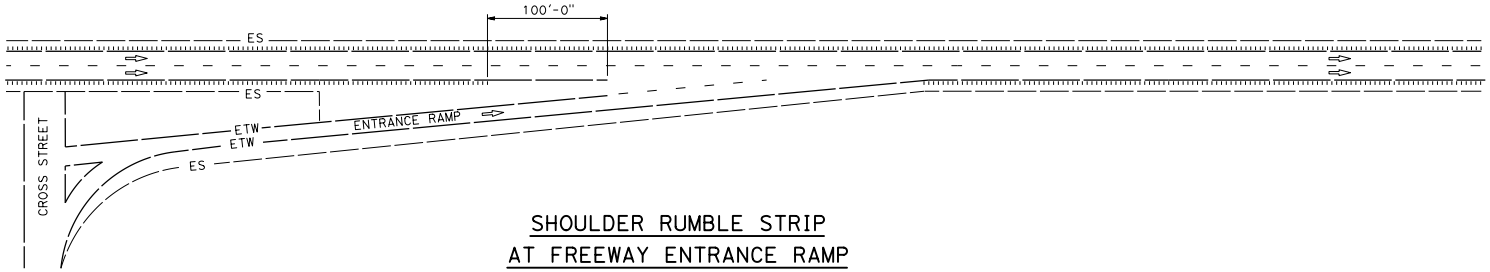

SHOULDER RUMBLE STRIP
AT FREEWAY ENTRANCE RAMP

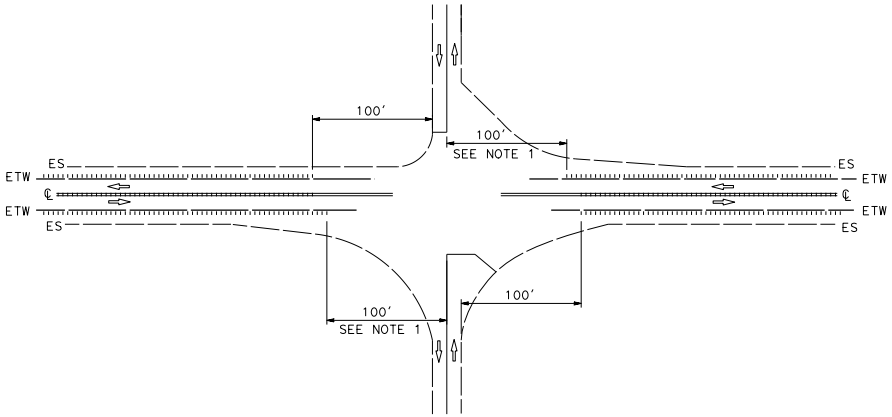

CENTER LINE AND SHOULDER RUMBLE STRIP
AT INTERSECTION

STATE OF CALIFORNIA
DEPARTMENT OF TRANSPORTATION

RUMBLE STRIP PLACEMENT AT FREEWAY EXIT RAMPS, FREEWAY ENTRANCE RAMPS, AND INTERSECTIONS

NO SCALE

A40E

7-1-26

2026 STANDARD PLAN A40E

Return to Table of Contents

Dist	COUNTY	ROUTE	POST MILES TOTAL PROJECT	SHEET No.	TOTAL SHEETS

REGISTERED CIVIL ENGINEER

September 18, 2026
PLANS APPROVAL DATE

REGISTERED PROFESSIONAL ENGINEER
Mike Malyy
No. C83437
Exp. 3-31-27
CIVIL
STATE OF CALIFORNIA

THE STATE OF CALIFORNIA OR ITS OFFICERS OR AGENTS SHALL NOT BE RESPONSIBLE FOR THE ACCURACY OR COMPLETENESS OF SCANNED COPIES OF THIS PLAN SHEET.

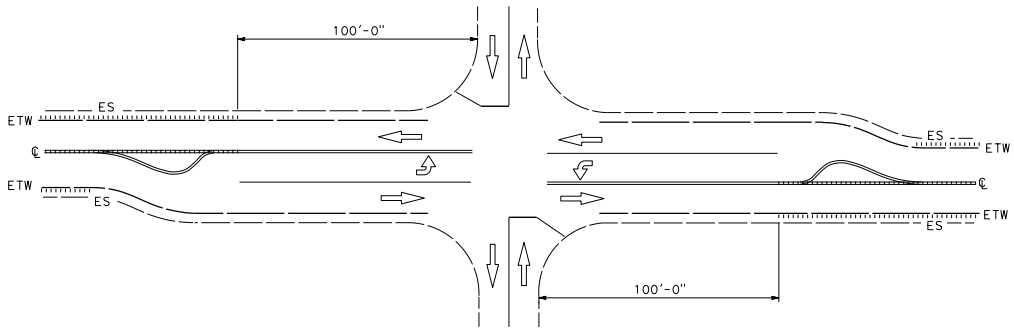

CENTERLINE AND SHOULDER RUMBLE STRIPS
AT INTERSECTION WITH LEFT TURN POCKETS

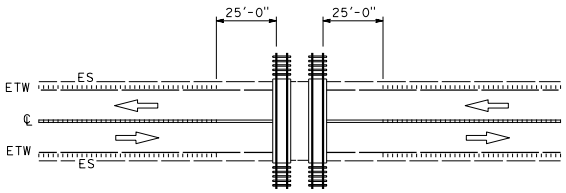

CENTERLINE AND SHOULDER RUMBLE STRIPS
AT RAILROAD CROSSING

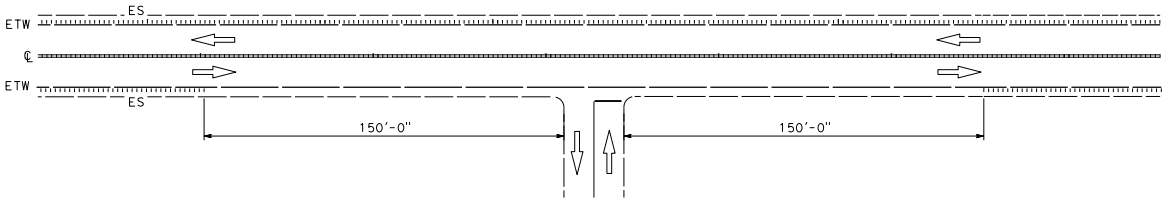

CENTERLINE AND SHOULDER RUMBLE STRIPS
AT DRIVEWAY/PRIVATE ROAD APPROACH

LEGEND:

RUMBLE STRIPS (GROUND-IN)

RAILROAD TRACKS

STATE OF CALIFORNIA
DEPARTMENT OF TRANSPORTATION

RUMBLE STRIP PLACEMENT AT INTERSECTIONS WITH LEFT TURN POCKETS, RAILROAD CROSSINGS, PRIVATE ROADS, AND MAJOR DRIVEWAYS

NO SCALE

A40F

7-1-26

2026 STANDARD PLAN A40F

Return to Table of Contents

Dist	COUNTY	ROUTE	POST MILES TOTAL PROJECT	SHEET No.	TOTAL SHEETS

REGISTERED CIVIL ENGINEER

September 18, 2026
PLANS APPROVAL DATE

REGISTERED PROFESSIONAL ENGINEER
Mike Maiyy
No. C83437
Exp. 3-31-27
CIVIL
STATE OF CALIFORNIA

THE STATE OF CALIFORNIA OR ITS OFFICERS OR AGENTS SHALL NOT BE RESPONSIBLE FOR THE ACCURACY OR COMPLETENESS OF SCANNED COPIES OF THIS PLAN SHEET.

LOCATION	SHOULDER DEPTH
a	0"
b	1/16"
c	5/32"
d	9/32"
e	5/16"

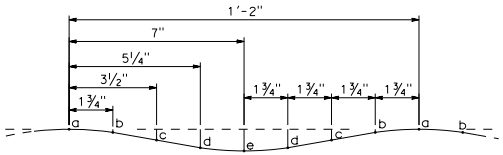

ELEVATION
SECTION A-A

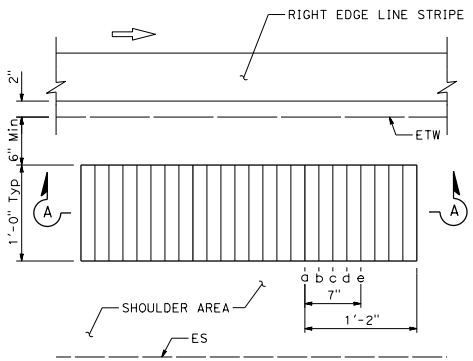

RIGHT OF DIRECTION OF TRAVEL

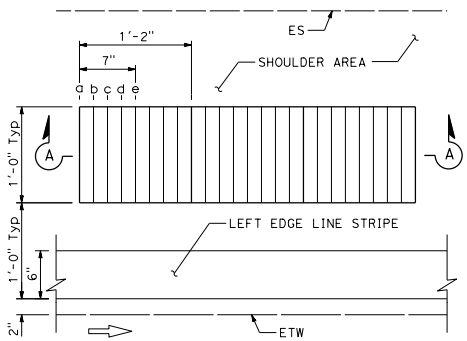

LEFT OF DIRECTION OF TRAVEL

PLAN
TYPICAL SHOULDER PLACEMENT

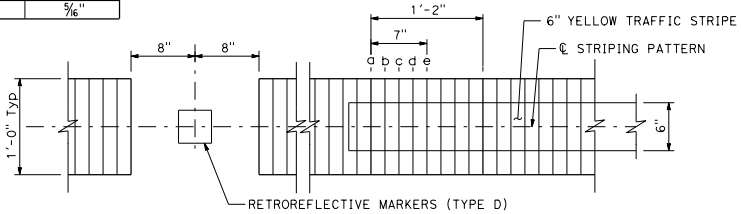

PLACEMENT IN PASSING ZONE - WITH RETROREFLECTIVE MARKERS

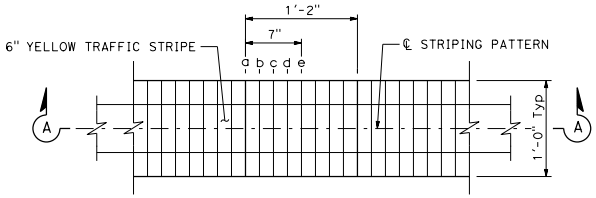

PLACEMENT IN PASSING ZONE

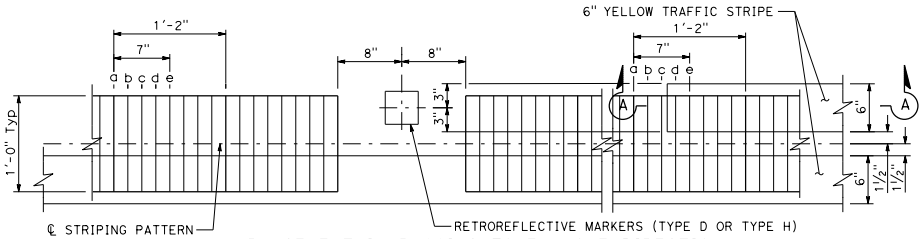

PLACEMENT IN PASSING ZONE - ONE DIRECTION

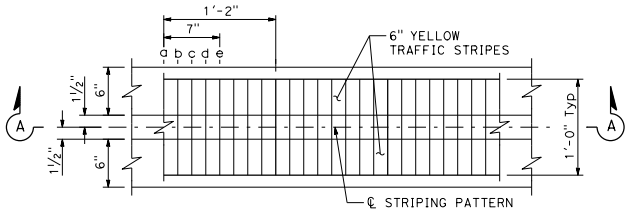

PLACEMENT IN NO PASSING ZONE

PLAN
TYPICAL CENTERLINE PLACEMENT

NOTES:

1. For shoulder, edge line, and centerline rumble strip details, see Standard Plans A40B, A40C, and A40D.
2. See Project Plans and Standard Plans A20A and A20B for pavement markers and traffic lines typical details.

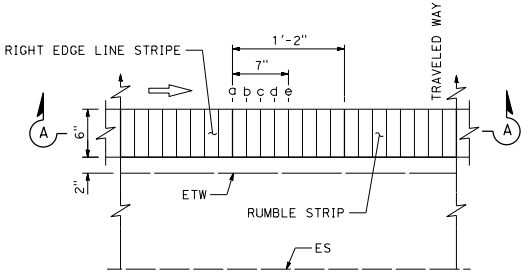

RIGHT OF DIRECTION OF TRAVEL

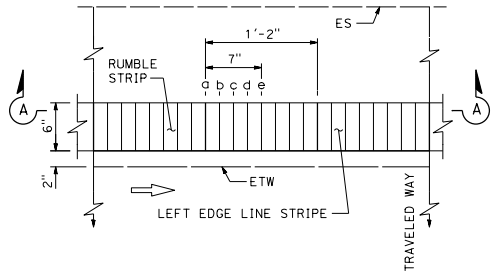

LEFT OF DIRECTION OF TRAVEL

PLAN
TYPICAL EDGE LINE PLACEMENT

STATE OF CALIFORNIA
DEPARTMENT OF TRANSPORTATION

SINUSOIDAL RUMBLE STRIP DETAILS GROUND-IN INDENTATIONS

NO SCALE

A40G

2026 STANDARD PLAN A40G

7-1-26

Return to Table of Contents

Dist	COUNTY	ROUTE	POST MILES TOTAL PROJECT	SHEET No.	TOTAL SHEETS

REGISTERED CIVIL ENGINEER

September 18, 2026

PLANS APPROVAL DATE

REGISTERED PROFESSIONAL ENGINEER Mike Malyy No. C83437 Exp. 3-31-27 CIVIL STATE OF CALIFORNIA

THE STATE OF CALIFORNIA OR ITS OFFICERS OR AGENTS SHALL NOT BE RESPONSIBLE FOR THE ACCURACY OR COMPLETENESS OF SCANNED COPIES OF THIS PLAN SHEET.

NOTES:

1. For shoulder, edge line, and center line rumble strip details, see Standard Plans A40B, A40C, and A40D.
2. Provide gaps for bicycles when rumble strips are used with a striped bicycle lane buffer.

LEGEND:

RUMBLE STRIPS (GROUND-IN)

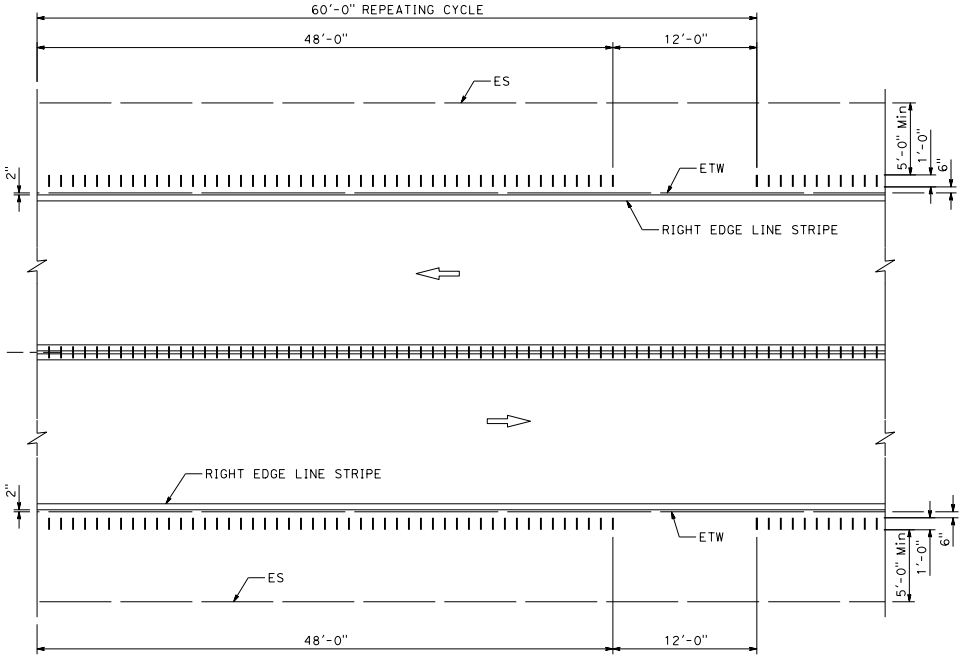

SHOULDER RUMBLE STRIPS WITH GAPS FOR BICYCLE WHERE BICYCLES ARE PERMITTED AND CLEAR SHOULDER WIDTH IS 5 FEET OR GREATER

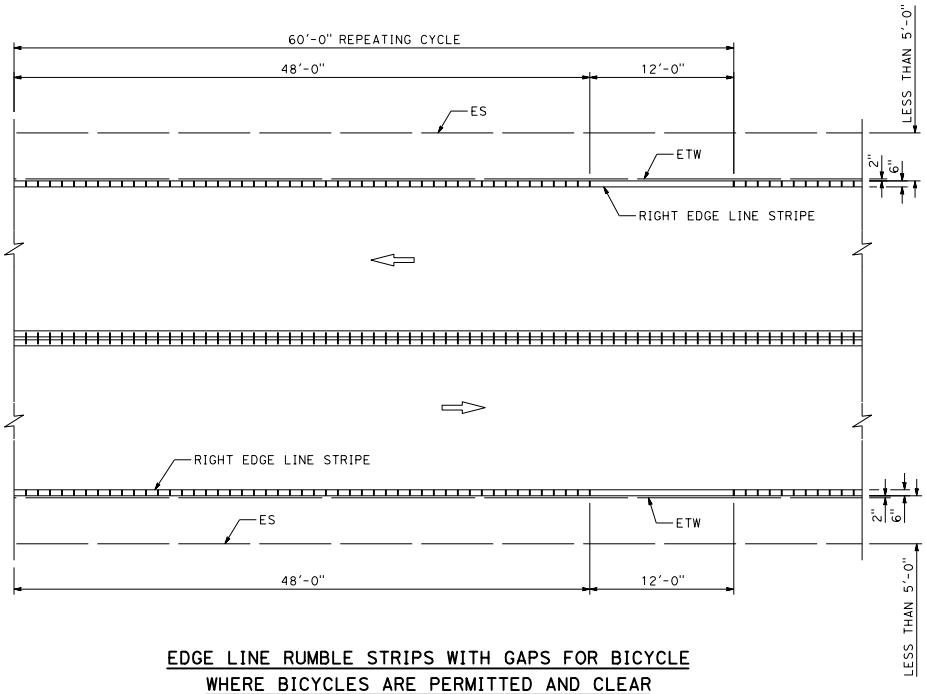

EDGE LINE RUMBLE STRIPS WITH GAPS FOR BICYCLE WHERE BICYCLES ARE PERMITTED AND CLEAR SHOULDER WIDTH IS LESS THAN 5 FEET

STATE OF CALIFORNIA
DEPARTMENT OF TRANSPORTATION

RUMBLE STRIP PLACEMENT WITH GAPS FOR BICYCLES

NO SCALE

A40H

2026 STANDARD PLAN A40H

7-1-26

Return to Table of Contents

Dist	COUNTY	ROUTE	POST MILES TOTAL PROJECT	SHEET No.	TOTAL SHEETS

REGISTERED CIVIL ENGINEER

September 18, 2026
PLANS APPROVAL DATE

REGISTERED PROFESSIONAL ENGINEER
Mike Malyy
No. C83437
Exp. 3-31-27
CIVIL
STATE OF CALIFORNIA

THE STATE OF CALIFORNIA OR ITS OFFICERS OR AGENTS SHALL NOT BE RESPONSIBLE FOR THE ACCURACY OR COMPLETENESS OF SCANNED COPIES OF THIS PLAN SHEET.

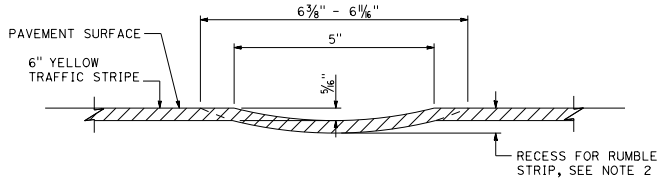

SECTION A-A

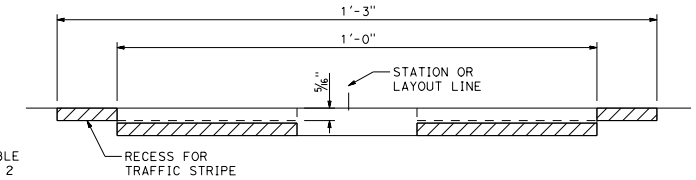

SECTION B-B

NOTES:

1. See Standard Plans A20D and A40D for recessed traffic stripe and center line rumble strip details.
2. Grind depth as necessary to result in 5/16" deep rumble strip after placing striping.

LEGEND:

STRIPE MATERIAL

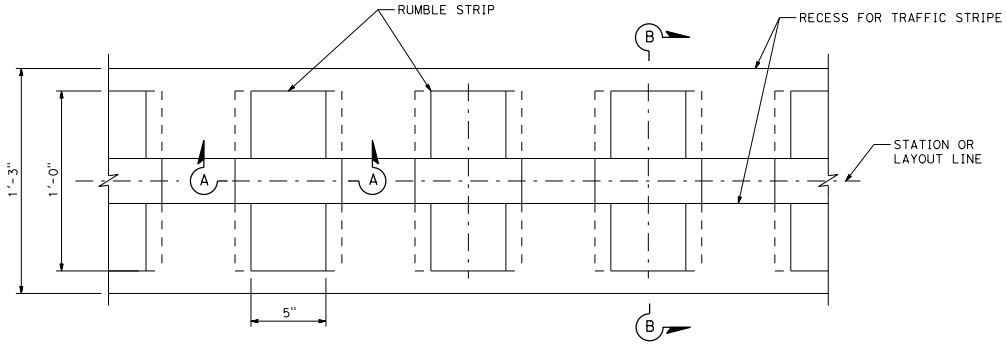

PLAN

NO PASSING ZONE - TWO DIRECTION

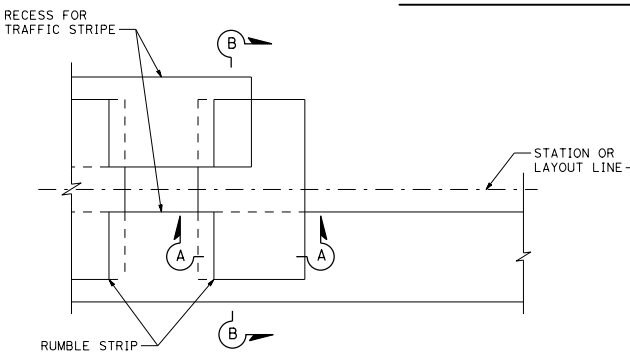

PLAN

NO PASSING ZONES - ONE DIRECTION

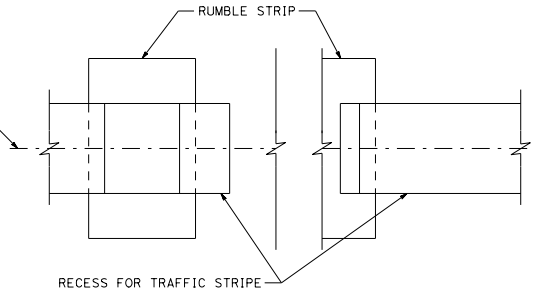

PLAN

PASSING ZONES - TWO DIRECTION

STATE OF CALIFORNIA
DEPARTMENT OF TRANSPORTATION

COMBINED RECESSED TRAFFIC STRIPE AND RUMBLE STRIP DETAILS

NO SCALE

A40J

2026 STANDARD PLAN A40J

7-1-26

Return to Table of Contents

Dist	COUNTY	ROUTE	POST MILES TOTAL PROJECT	SHEET No.	TOTAL SHEETS

REGISTERED CIVIL ENGINEER

September 18, 2026
PLANS APPROVAL DATE

REGISTERED PROFESSIONAL ENGINEER
Mike Maiyy
No. C83437
Exp. 3-31-27
CIVIL
STATE OF CALIFORNIA

THE STATE OF CALIFORNIA OR ITS OFFICERS OR AGENTS SHALL NOT BE RESPONSIBLE FOR THE ACCURACY OR COMPLETENESS OF SCANNED COPIES OF THIS PLAN SHEET.

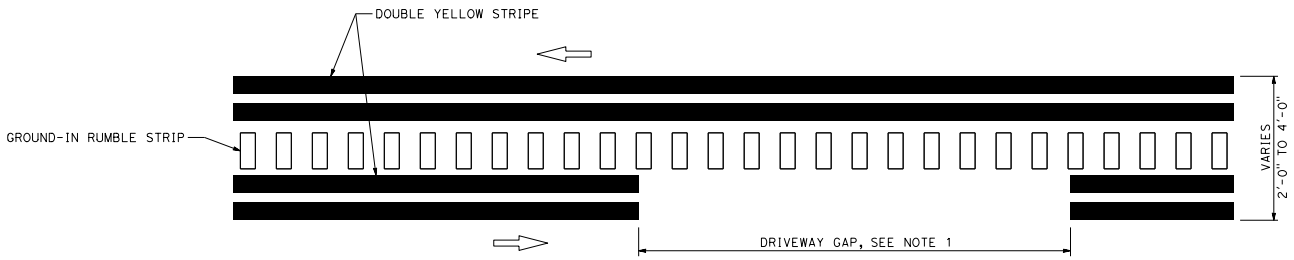

PLAN

CENTERLINE RUMBLE STRIPS
WITH DOUBLE-DOUBLE YELLOW STRIPES

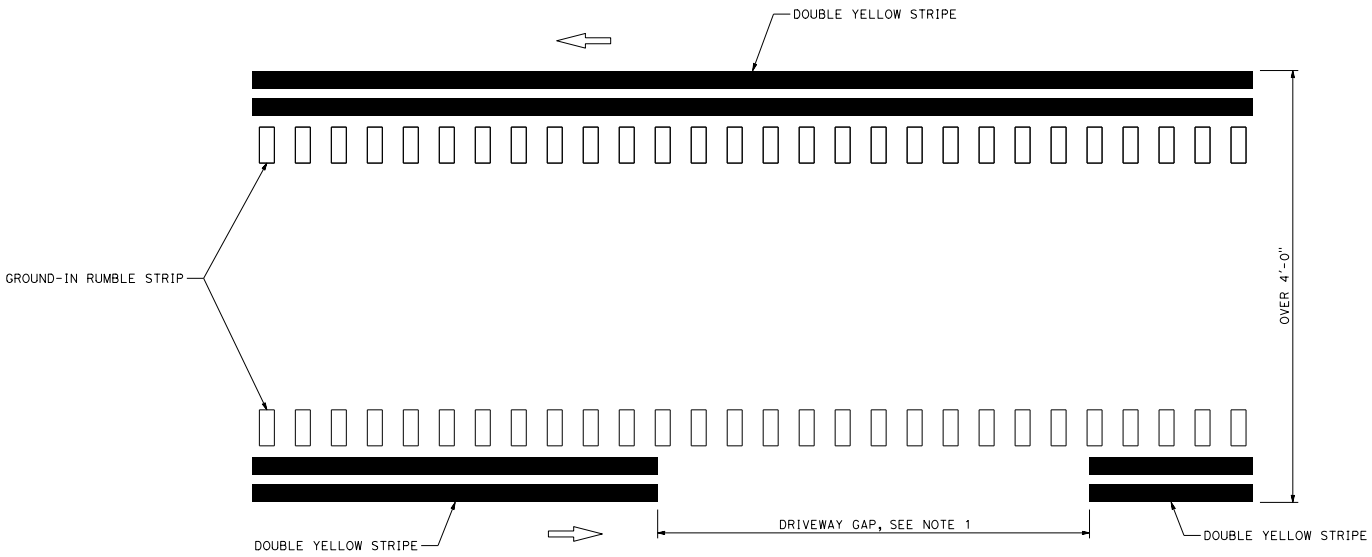

PLAN

CENTERLINE RUMBLE STRIPS
WITH DOUBLE-DOUBLE YELLOW STRIPES

NOTE:

1. Continue rumble strips through gap for driveway.

STATE OF CALIFORNIA
DEPARTMENT OF TRANSPORTATION

RUMBLE STRIP PLACEMENT FOR PAVED MEDIANS

NO SCALE

A40K

7-1-26

2026 STANDARD PLAN A40K

Return to Table of Contents

Dist	COUNTY	ROUTE	POST MILES TOTAL PROJECT	SHEET No.	TOTAL SHEETS

REGISTERED CIVIL ENGINEER

September 18, 2026
PLANS APPROVAL DATE

REGISTERED PROFESSIONAL ENGINEER
Mike Maiyy
No. C83437
Exp. 3-31-27
CIVIL
STATE OF CALIFORNIA

THE STATE OF CALIFORNIA OR ITS OFFICERS OR AGENTS SHALL NOT BE RESPONSIBLE FOR THE ACCURACY OR COMPLETENESS OF SCANNED COPIES OF THIS PLAN SHEET.

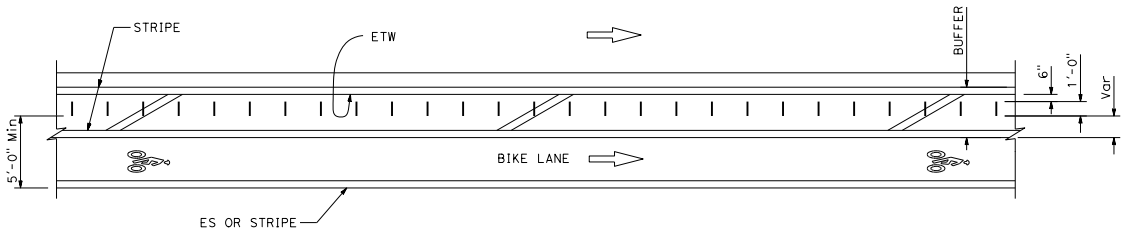

PLAN

SHOULDER RUMBLE STRIP FOR BUFFERED CLASS 2 BICYCLE LANE AND CLEAR WIDTH OF 5 FEET OR GREATER IS PROVIDED

NOTE:

1. Provide gaps for bicycles when rumble strips are used with a striped bicycle lane buffer. See Standard Plan A40H for spacing details.

LEGEND:

| | | RUMBLE STRIPS (GROUND-IN)

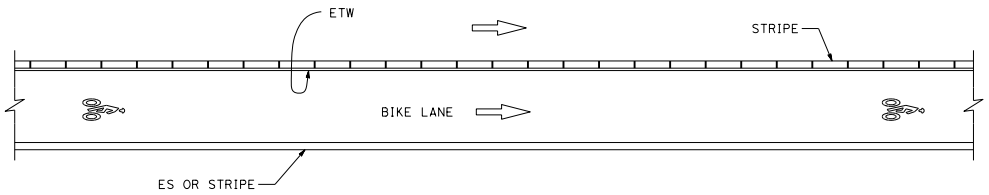

PLAN

EDGE LINE RUMBLE STRIP FOR CLASS 2 BICYCLE LANE

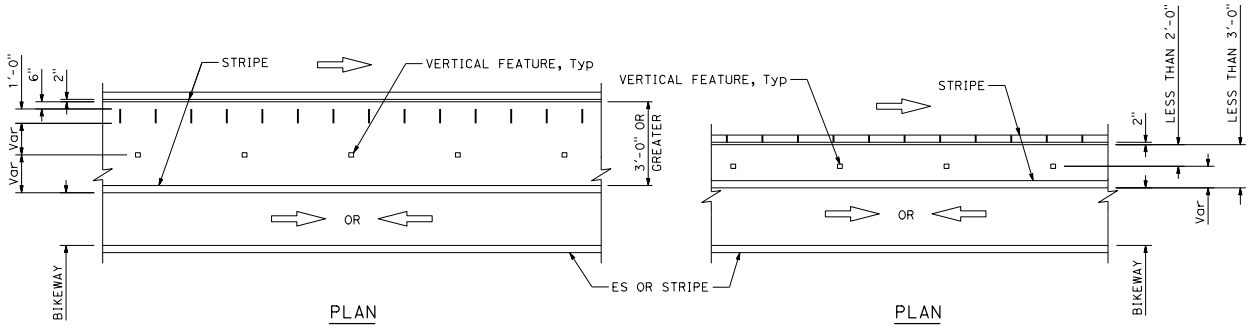

PLAN PLAN

SHOULDER RUMBLE STRIP FOR CLASS 4 BIKEWAY

STATE OF CALIFORNIA
DEPARTMENT OF TRANSPORTATION

RUMBLE STRIP PLACEMENT FOR CLASS 2 BICYCLE LANE AND CLASS 4 BIKEWAY

NO SCALE

A40L

7-1-26

2026 STANDARD PLAN A40L

Return to Table of Contents

Dist	COUNTY	ROUTE	POST MILES TOTAL PROJECT	SHEET No.	TOTAL SHEETS

REGISTERED CIVIL ENGINEER

September 18, 2026

PLANS APPROVAL DATE

REGISTERED PROFESSIONAL ENGINEER Carl M. Duan No. C59976 Exp. 6-30-28 CIVIL STATE OF CALIFORNIA

THE STATE OF CALIFORNIA OR ITS OFFICERS OR AGENTS SHALL NOT BE RESPONSIBLE FOR THE ACCURACY OR COMPLETENESS OF SCANNED COPIES OF THIS PLAN SHEET.

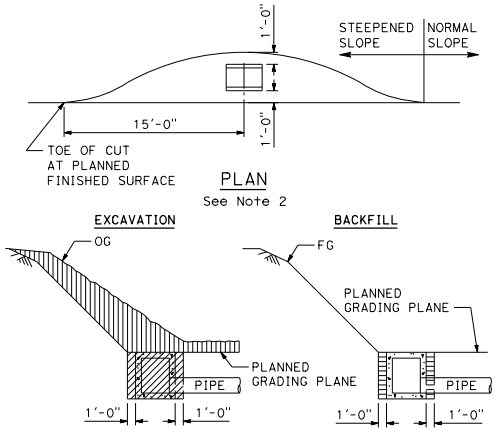

PLAN
See Note 2

SECTION
RECESSES AT DRAINAGE INLETS

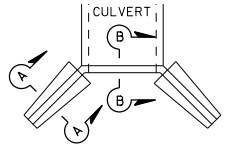

PLAN OF WING WALL

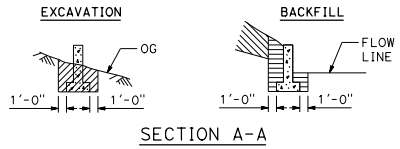

SECTION A-A

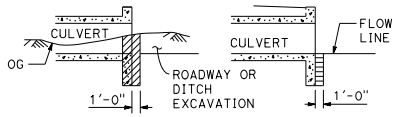

SECTION B-B
WING WALLS

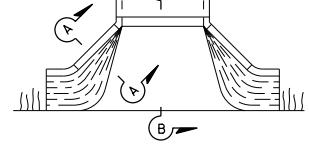

PLAN OF WARPED WING WALL

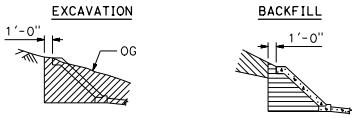

SECTION A-A

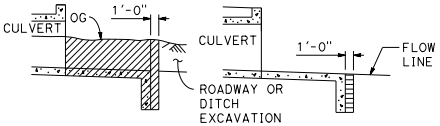

SECTION B-B
WARPED WING WALLS

NOTES:

1. This drawing indicates the work to be done and limits of payment for:
   Roadway Excavation
   Ditch Excavation
   Structure Excavation for Slope Protection
2. Slopes and dimensions may vary to fit field conditions.
3. Top limit of structure excavation is original ground if ditch is not excavated.

LEGEND:

- STRUCTURE EXCAVATION
- STRUCTURE BACKFILL
- DITCH EXCAVATION
- SLOPE PROTECTION
- ROADWAY EXCAVATION
- ROADWAY EMBANKMENT

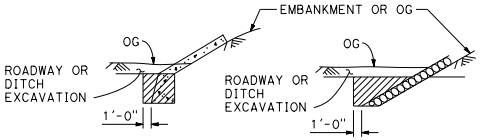

SLOPE PROTECTION
See Note 3

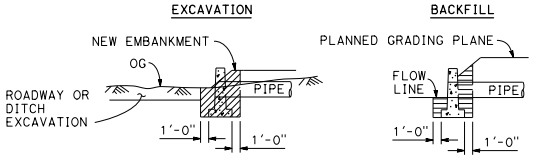

PIPE HEADWALLS

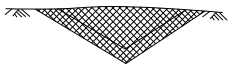

PAVED OR LINED DITCH

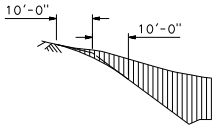

SLOPE ROUNDING

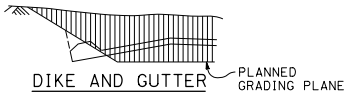

DIKE AND GUTTER

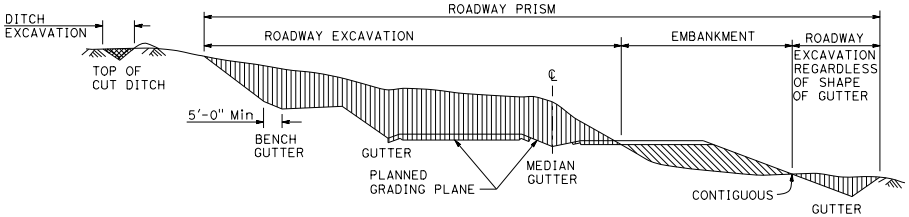

ROADWAY EXCAVATION - DITCH EXCAVATION

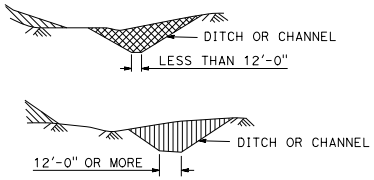

STATE OF CALIFORNIA
DEPARTMENT OF TRANSPORTATION

EXCAVATION AND BACKFILL MISCELLANEOUS DETAILS

NO SCALE

A62A

2026 STANDARD PLAN A62A

7-1-26

Return to Table of Contents

Dist	COUNTY	ROUTE	POST MILES TOTAL PROJECT	SHEET No.	TOTAL SHEETS

REGISTERED CIVIL ENGINEER

September 18, 2026
PLANS APPROVAL DATE

Gary Wang
No. C58298
Exp. 6-30-28
CIVIL
STATE OF CALIFORNIA
REGISTERED PROFESSIONAL ENGINEER

THE STATE OF CALIFORNIA OR ITS OFFICERS OR AGENTS SHALL NOT BE RESPONSIBLE FOR THE ACCURACY OR COMPLETENESS OF SCANNED COPIES OF THIS PLAN SHEET.

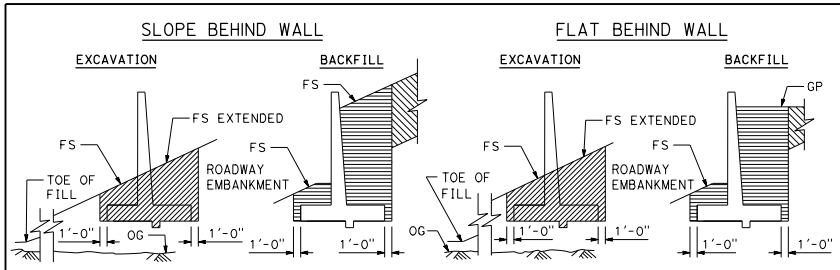

RETAINING WALL IN FILL, ON SLOPE

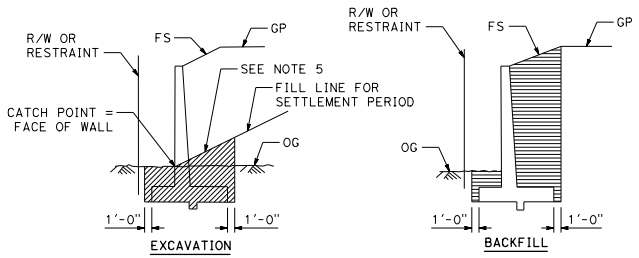

RETAINING WALL IN OG WITH SETTLEMENT PERIOD AND NEXT TO R/W LINE OR OTHER RESTRAINTS

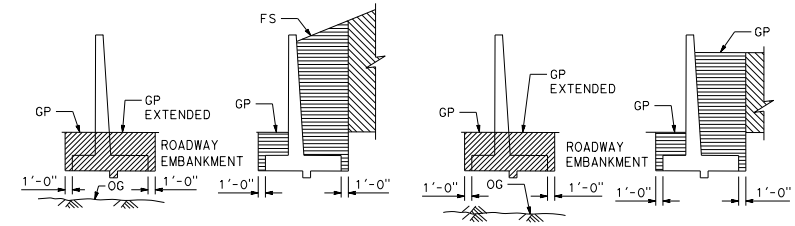

RETAINING WALL IN FILL

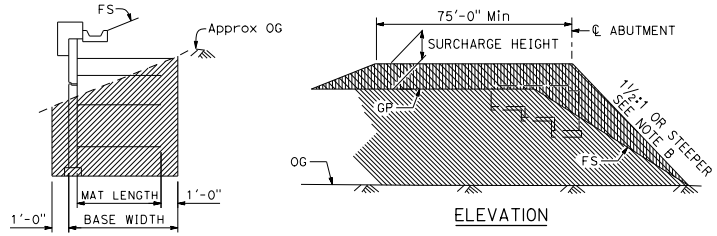

MSE EXCAVATION

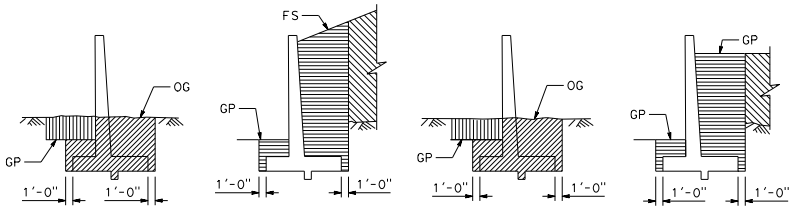

RETAINING WALL IN FILL AND CUT

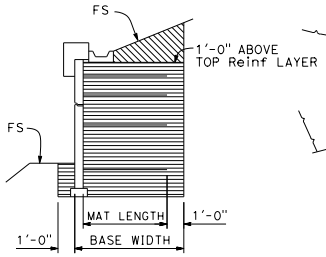

MSE BACKFILL UNDER SLOPE

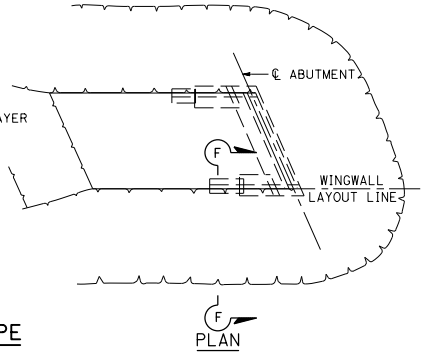

BRIDGE EMBANKMENT SURCHARGE

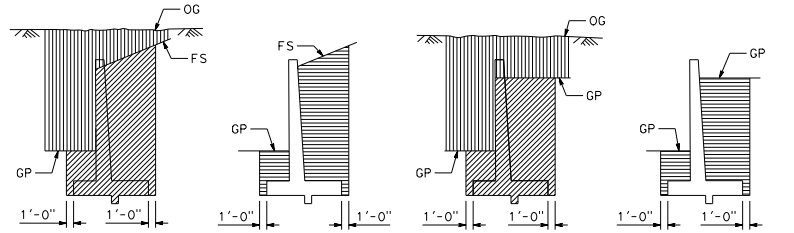

RETAINING WALL IN CUT

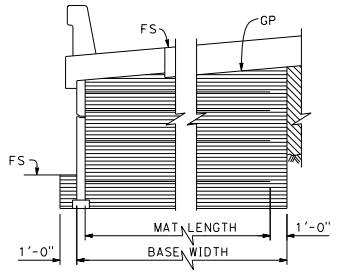

MSE BACKFILL UNDER ROADWAY

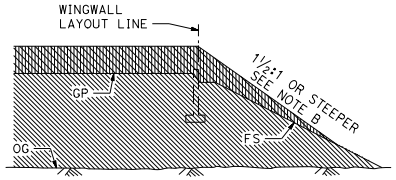

SECTION F-F

NOTES:

1. Roadway embankment is not delineated on excavation drawings for clarity.
2. Embankment, if any, must be in place before structure excavation is made.
3. If no roadway or ditch excavation or embankment is involved at the wall, structure excavation will be measured from the original ground.
4. When an embankment settlement period is required, the upper limits of structure excavation are raised to conform to the elevation of the embankment after the settlement period or, when an embankment surcharge is used to the finished surface and grading plane elevations.
5. Embankment slopes to be as steep as material permits. Slope assumed to be 1:1 for purposes of quantity calculations.

LEGEND:

- BRIDGE EMBANKMENT SURCHARGE
- ROADWAY EXCAVATION
- ROADWAY EMBANKMENT
- STRUCTURE EXCAVATION
- STRUCTURE BACKFILL

SURCHARGE NOTES:

A. Bridge embankment surcharges to be placed at locations and to the heights listed in the special provisions.

B. Surcharge slopes to be as steep as stability of material permits.

STATE OF CALIFORNIA
DEPARTMENT OF TRANSPORTATION

LIMITS OF PAYMENT FOR EXCAVATION AND BACKFILL BRIDGE SURCHARGE AND WALL

NO SCALE

A62B

7-1-26

Return to Table of Contents

Dist	COUNTY	ROUTE	POST MILES TOTAL PROJECT	SHEET No.	TOTAL SHEETS

REGISTERED CIVIL ENGINEER

September 18, 2026
PLANS APPROVAL DATE

REGISTERED PROFESSIONAL ENGINEER Gary Wang No. C58298 Exp. 6-30-28 CIVIL STATE OF CALIFORNIA

THE STATE OF CALIFORNIA OR ITS OFFICERS OR AGENTS SHALL NOT BE RESPONSIBLE FOR THE ACCURACY OR COMPLETENESS OF SCANNED COPIES OF THIS PLAN SHEET.

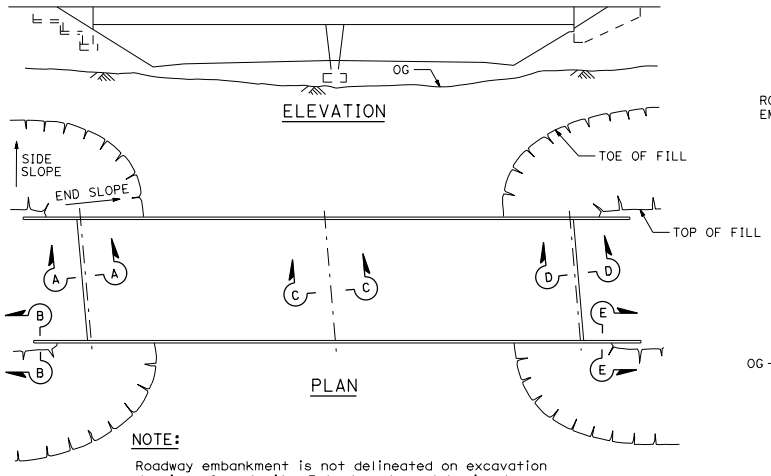

NOTE:

Roadway embankment is not delineated on excavation drawings for clarity. Embankment must be in place before structure excavation is made.

IN FILL

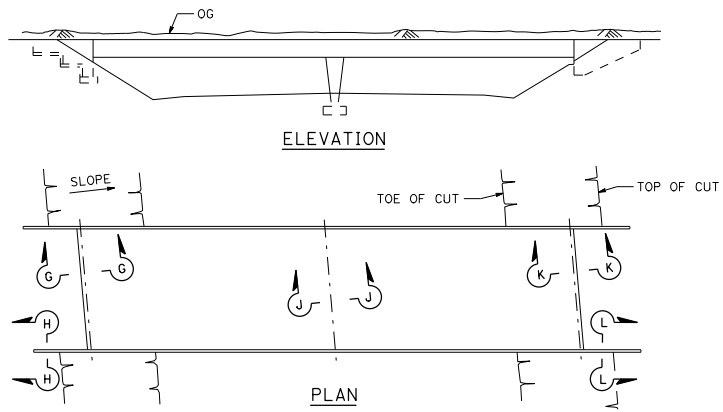

NOTE:

If no roadway excavation is involved at bridge, structure excavation is measured from original ground.

IN CUT

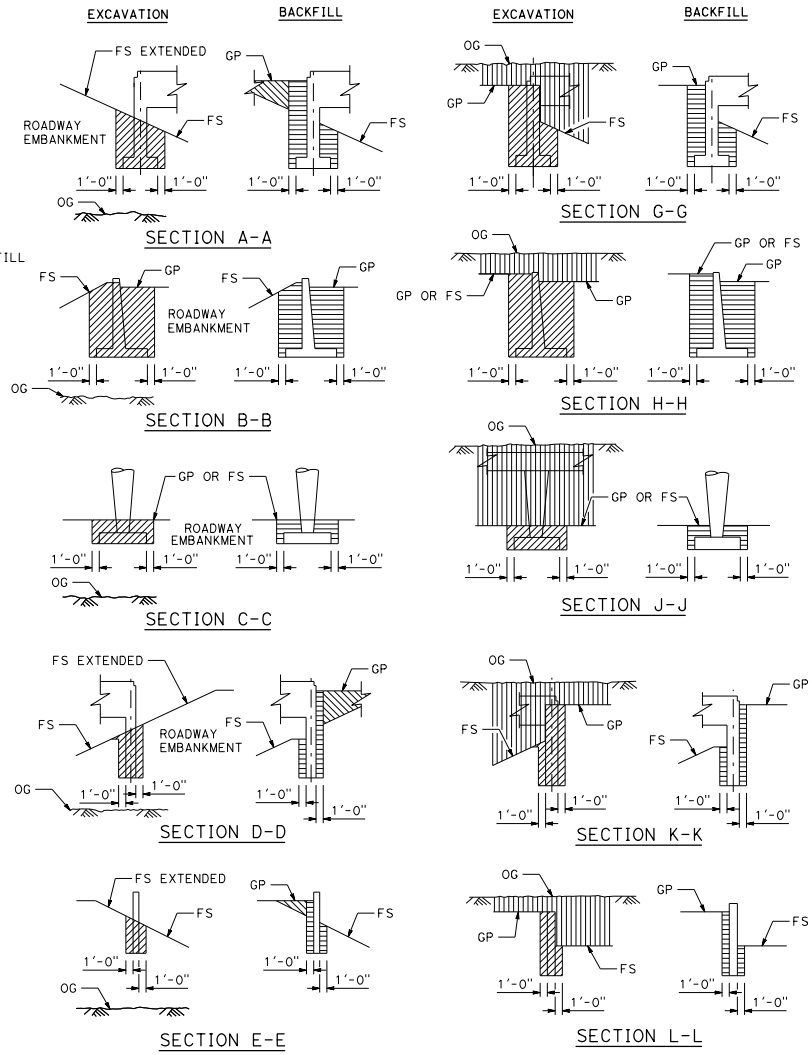

LEGEND:

- STRUCTURE EXCAVATION
- STRUCTURE BACKFILL
- ROADWAY EXCAVATION
- ROADWAY EMBANKMENT

STATE OF CALIFORNIA
DEPARTMENT OF TRANSPORTATION

LIMITS OF PAYMENT FOR EXCAVATION AND BACKFILL BRIDGE

NO SCALE

A62C

7-1-26

Return to Table of Contents

Dist	COUNTY	ROUTE	POST MILES TOTAL PROJECT	SHEET No.	TOTAL SHEETS

REGISTERED CIVIL ENGINEER

September 18, 2026
PLANS APPROVAL DATE

REGISTERED PROFESSIONAL ENGINEER Carl M. Duan No. C59976 Exp. 6-30-28 CIVIL STATE OF CALIFORNIA

THE STATE OF CALIFORNIA OR ITS OFFICERS OR AGENTS SHALL NOT BE RESPONSIBLE FOR THE ACCURACY OR COMPLETENESS OF SCANNED COPIES OF THIS PLAN SHEET.

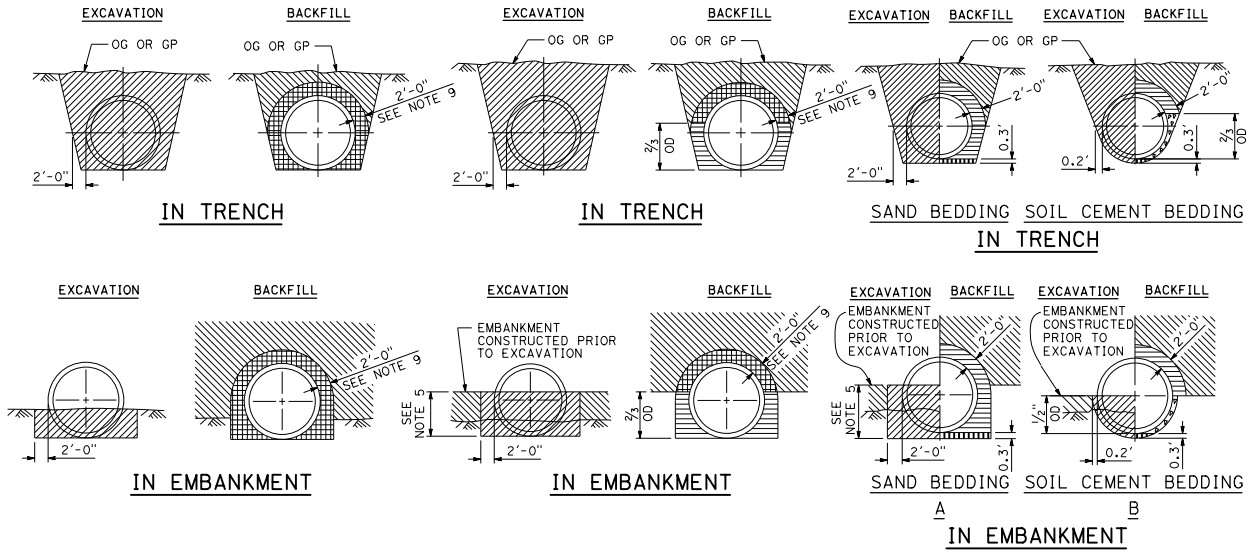

REINFORCED CONCRETE PIPE See Notes 1, 2, 7 and 10					
METHOD 1		METHOD 2		METHOD 3	
MINIMUM ALLOWABLE CLASSES OF RCP FOR METHOD 1		MINIMUM ALLOWABLE CLASSES OF RCP FOR METHOD 2		MINIMUM ALLOWABLE CLASSES OF RCP FOR METHOD 3	
COVER	MINIMUM CLASS AND D-LOAD	COVER	MINIMUM CLASS AND D-LOAD	COVER	MINIMUM CLASS AND D-LOAD
5.9'	CLASS II 1000D	15.9'	CLASS II 1000D	25.9'	CLASS II 1000D
6.0' - 7.9'	CLASS III 1350D	16.0' - 19.9'	CLASS III 1350D	26.0' - 31.9'	CLASS III 1350D
8.0' - 9.9'	CLASS III SPECIAL 1700D	20.0' - 24.9'	CLASS III SPECIAL 1700D	32.0' - 37.9'	CLASS III SPECIAL 1700D
10.0' - 11.9'	CLASS IV 2000D	25.0' - 27.9'	CLASS IV 2000D	38.0' - 44.9'	CLASS IV 2000D
12.0' - 13.9'	CLASS IV SPECIAL 2500D	28.0' - 34.9'	CLASS IV SPECIAL 2500D	45.0' - 55.9'	CLASS IV SPECIAL 2500D
14.0' - 16.9'	CLASS V 3000D	35.0' - 41.9'	CLASS V 3000D	56.0' - 67.9'	CLASS V 3000D
17.0' - 20.0'	CLASS V SPECIAL 3600D	42.0' - 50.0'	CLASS V SPECIAL 3600D	68.0' - 80.0'	CLASS V SPECIAL 3600D
SEE NOTES 6 AND 9		SEE NOTES 8 AND 9			

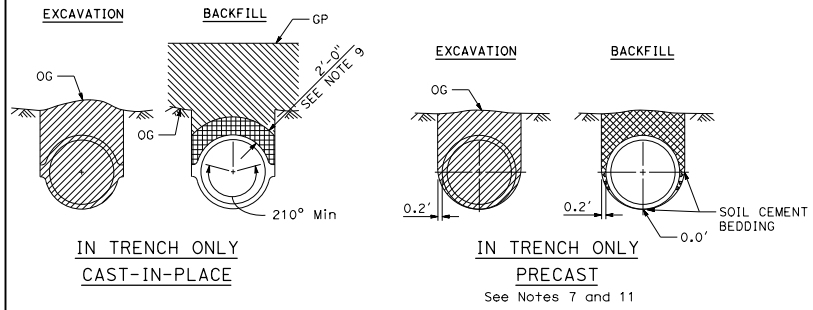

NON-REINFORCED CONCRETE PIPE

NOTES:

1. Unless otherwise shown on the plans or specified in the special provisions, the Contractor shall have the option of selecting the class of RCP and the method of backfill to be used, provided the height of cover does not exceed the value shown for the RCP selected.
   Example:
   2'-0" RCP culvert with maximum cover of 19'-0" the options are:
   a) Class V Special or stronger with Method 1.
   b) Class III or stronger with Method 2.
   c) Class II or stronger with Method 3.
   Cover is defined as the maximum vertical distance from top of pipe to finished grade within the length of any given culvert.
2. The class of RCP, method of backfill and bedding selected shall be the same throughout the length of any given culvert.
3. The "length of any culvert" is defined as the culvert between:
   a) Successive drainage structures (inlets, junction boxes, headwalls, etc.).
   b) A drainage structure and the inlet or outlet end of the culvert.
   c) The inlet and outlet end of the culvert when there are no intervening drainage structures.
4. Slope or shore excavation sides as necessary.
5. Embankment height prior to excavation for installation of all classes of RCP under Methods 2 and 3A shall be as follows:
   Pipe sizes 1'-0" to 3'-6", ID = 2'-6"
   Pipe sizes 4'-0" to 7'-0", ID = 2/3 OD
   Pipe sizes larger than 7'-0", ID = 5'-0"
6. The maximum size for all classes of RCP placed under Method 1 is 6'-6" ID.
7. Non-reinforced precast pipe sizes 1'-0" or smaller may also be placed under Methods 1, 2 or 3.
8. Elliptical shaped RCP shall be placed under Method 2 only.
9. Embankment compaction requirements govern over the 90% relative compaction backfill requirement within 2'-6" of finished grade.
10. Backfill shall be placed full width of excavation except where dimensions are shown for backfill width or thickness. Dimensions shown are minimums.
11. Where the precast non-reinforced concrete pipe is used as a substitute for the cast-in-place pipe, both the wall thickness and the concrete strength shall be at least as great as that specified for the cast-in-place pipe. The fill height allowed shall not exceed that shown for the cast-in-place pipe.

LEGEND:

- STRUCTURE EXCAVATION (CULVERT)
- STRUCTURE BACKFILL (CULVERT) 95% RELATIVE COMPACTION
- STRUCTURE BACKFILL (CULVERT) 90% RELATIVE COMPACTION
- ROADWAY EMBANKMENT
- LOOSE BACKFILL
- SOIL CEMENT BEDDING
- SAND BEDDING

OD = OUTSIDE DIAMETER FOR CIRCULAR PIPES AND MAXIMUM VERTICAL DIMENSION FOR OTHER SHAPES

ID = INSIDE DIAMETER FOR CIRCULAR PIPES AND MINIMUM VERTICAL DIMENSION FOR OTHER SHAPES

STATE OF CALIFORNIA
DEPARTMENT OF TRANSPORTATION

EXCAVATION AND BACKFILL CONCRETE PIPE CULVERTS

NO SCALE

A62D

2026 STANDARD PLAN A62D

7-1-26

Return to Table of Contents

Dist	COUNTY	ROUTE	POST MILES TOTAL PROJECT	SHEET No.	TOTAL SHEETS

REGISTERED CIVIL ENGINEER

September 18, 2026
PLANS APPROVAL DATE

REGISTERED PROFESSIONAL ENGINEER Carl M. Duan No. C59976 Exp. 6-30-28 CIVIL STATE OF CALIFORNIA

THE STATE OF CALIFORNIA OR ITS OFFICERS OR AGENTS SHALL NOT BE RESPONSIBLE FOR THE ACCURACY OR COMPLETENESS OF SCANNED COPIES OF THIS PLAN SHEET.

DESIGN NOTES:

Design: AASHTO LRFD Bridge Design Specifications, 8th edition with California Amendments. INDIRECT DESIGN METHOD

Soil: w Fe = 162 pcf Installation Type 1
w Fe = 168 pcf Installation Types 2 & 3
w = Unit weight of soil (pcf)
Fe = Soil-structure interaction factor

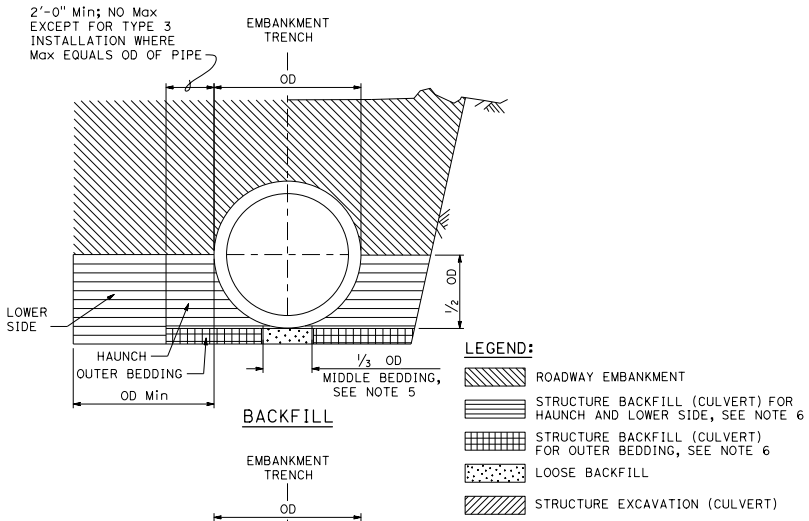

BACKFILL

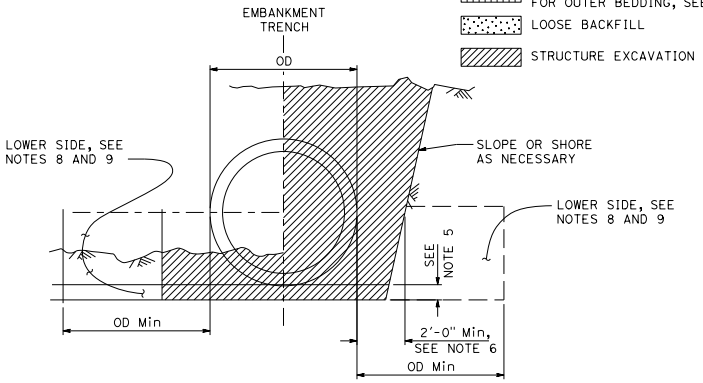

EXCAVATION

INSTALLATION TYPE 1:

The haunch and outer bedding shall be compacted to a minimum 90 percent relative compaction. In addition, the minimum sand equivalent in these areas shall be 30 and the maximum percentage passing the No. 200 sieve size shall be 5.

INSTALLATION TYPE 2:

The haunch and outer bedding shall be compacted to a minimum 90 percent relative compaction. In addition, the minimum sand equivalent in these areas shall be 25.

INSTALLATION TYPE 3:

The haunch and outer bedding shall be compacted to a minimum 85 percent relative compaction. 90 percent relative compaction will be required where the fill over the pipe is less than 4'-0" or 1/2 OD. In addition, the minimum sand equivalent in these areas shall be 25.

INSTALLATION TYPE 1

MINIMUM CLASS AND D-LOAD	COVER	
	60" Dia AND SMALLER	OVER 60" Dia TO 120" Dia Max
CLASS II 1000D	14.9'	12.9'
CLASS III 1350D	15.0' - 21.3'	13.0' - 18.9'
CLASS III SPECIAL 1700D	22.0' - 26.8'	19.0' - 24.9'
CLASS IV 2000D	28.0' - 31.5'	25.0' - 29.9'
CLASS IV SPECIAL 2500D	33.0' - 37.8'	30.0' - 38.9'
CLASS V 3000D	42.0' - 47.5'	39.0' - 46.9'
CLASS V SPECIAL 3600D	50.0' - 57.3'	47.0' - 58.0'

INSTALLATION TYPE 2

MINIMUM CLASS AND D-LOAD	COVER	
	60" Dia AND SMALLER	OVER 60" Dia TO 120" Dia Max
CLASS II 1000D	11.9'	9.9'
CLASS III 1350D	12.0' - 15.9'	10.0' - 14.9'
CLASS III SPECIAL 1700D	16.0' - 20.5'	15.0' - 19.9'
CLASS IV 2000D	21.0' - 24.3'	20.0' - 23.9'
CLASS IV SPECIAL 2500D	25.0' - 30.3'	24.0' - 30.9'
CLASS V 3000D	32.0' - 36.3'	31.0' - 37.9'
CLASS V SPECIAL 3600D	38.0' - 43.8'	38.0' - 46.0'

INSTALLATION TYPE 3

MINIMUM CLASS AND D-LOAD	COVER	
	60" Dia AND SMALLER	OVER 60" Dia TO 120" Dia Max
CLASS II 1000D	8.9'	5.9'
CLASS III 1350D	9.0' - 11.9'	6.0' - 10.9'
CLASS III SPECIAL 1700D	12.0' - 15.9'	11.0' - 13.9'
CLASS IV 2000D	16.0' - 18.9'	14.0' - 17.9'
CLASS IV SPECIAL 2500D	19.0' - 23.3'	18.0' - 22.9'
CLASS V 3000D	25.0' - 28.3'	23.0' - 28.9'
CLASS V SPECIAL 3600D	30.0' - 34.3'	29.0' - 35.0'

NOTES:

1. Unless otherwise shown on the plans or specified in the special provisions, the Contractor shall have the option of selecting the class of RCP and the type of installation to be used, provided the height of cover does not exceed the value shown for the RCP selected.
   Example: 24" RCP culvert with maximum cover of 24'-0" the options are:
   a) Class III Special or stronger with Installation Type 1.
   b) Class IV or stronger with Installation Type 2.
   c) Class IV Special or stronger with Installation Type 3.
   Cover is defined as the maximum vertical distance from top of the pipe to finished grade within the length of any given culvert.
2. The class of RCP and Installation Type selected shall be the same throughout the length of any given culvert.
3. The "length of any culvert" is defined as the culvert between:
   a) Successive drainage structure (inlets, junction boxes, headwalls, etc.).
   b) A drainage structure and the inlet or outlet end of the culvert.
   c) The inlet and outlet end of the culvert when there are no intervening drainage structures.
4. Elliptical shaped RCP shall not be used.
5. Bedding depth: 1/24 OD Min, not less than 3" for soil foundation; 1/12 OD Min, not less 6" for rock foundation.
6. Slurry cement backfill may be substituted for backfill in the outer bedding and haunch areas. If slurry is used, the outer and middle beddings shall be omitted. Prior to installation, the soil under the middle 1/3 of the outside diameter of the pipe shall be softened by scarifying or other means to a minimum depth of 1/24 OD, but not less than 3". Where slurry cement backfill is used, clear distance to trench wall may be reduced as set forth in the Standard Specifications.
7. Backfill shall be placed full width of excavation except where dimensions are shown for backfill width or thickness. Dimensions shown are minimum.
8. Structure backfill for lower side in embankment installations shall be the same as in haunch. Lower side in trench installation shall at least have the same firmness as in haunch.
9. Where the pipe is placed in a trench, if the trench walls are sloped at 5 vertical to 1 horizontal or steeper for at least 90 percent of the trench height or up to not less than 12" from the grading plane, the firmness of the soil in the lower side need not be considered.

STATE OF CALIFORNIA
DEPARTMENT OF TRANSPORTATION

EXCAVATION AND BACKFILL CONCRETE PIPE CULVERTS INDIRECT DESIGN METHOD

NO SCALE

A62DA

2026 STANDARD PLAN A62DA

7-1-26

Return to Table of Contents

Dist	COUNTY	ROUTE	POST MILES TOTAL PROJECT	SHEET No.	TOTAL SHEETS

REGISTERED CIVIL ENGINEER

September 18, 2026
PLANS APPROVAL DATE

REGISTERED PROFESSIONAL ENGINEER
Carl M. Duan
No. C59976
Exp. 6-30-28
CIVIL
STATE OF CALIFORNIA

THE STATE OF CALIFORNIA OR ITS OFFICERS OR AGENTS SHALL NOT BE RESPONSIBLE FOR THE ACCURACY OR COMPLETENESS OF SCANNED COPIES OF THIS PLAN SHEET.

NOTES:

1. Slope or shore excavation sides as necessary.
2. Dimensions shown are minimum.

LEGEND:

- STRUCTURE EXCAVATION (CULVERT)
- STRUCTURE BACKFILL (CULVERT) 95% RELATIVE COMPACTION
- ROADWAY EMBANKMENT

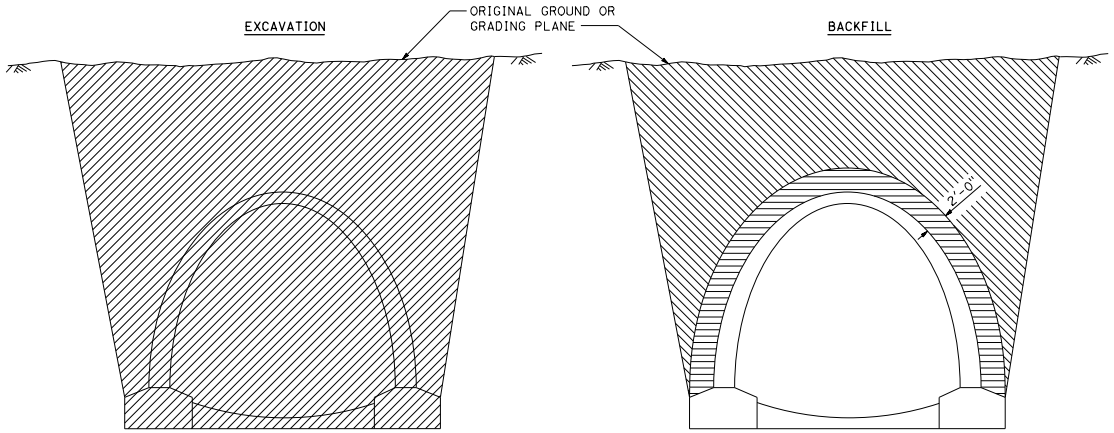

IN TRENCH

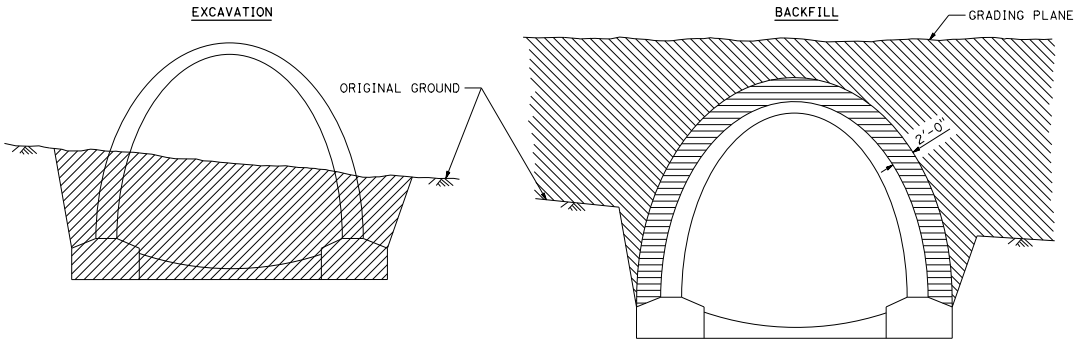

IN EMBANKMENT

REINFORCED CONCRETE ARCH CULVERT

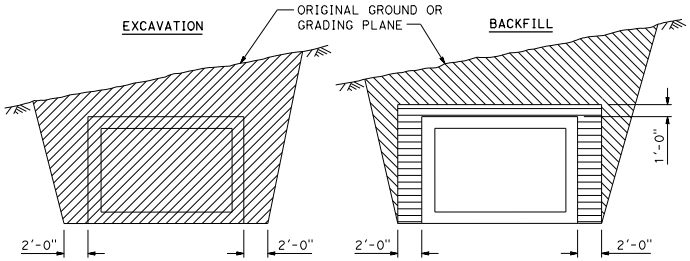

IN TRENCH

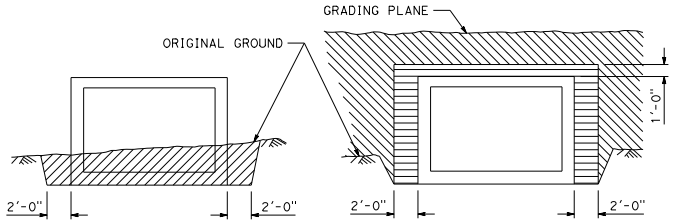

IN EMBANKMENT

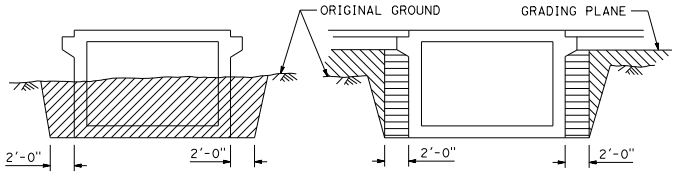

EXPOSED TOP

REINFORCED CONCRETE BOX CULVERT

STATE OF CALIFORNIA
DEPARTMENT OF TRANSPORTATION

EXCAVATION AND BACKFILL CAST-IN-PLACE REINFORCED CONCRETE BOX AND ARCH CULVERTS

NO SCALE

A62E

7-1-26

2026 STANDARD PLAN A62E

Return to Table of Contents

Dist	COUNTY	ROUTE	POST MILES TOTAL PROJECT	SHEET No.	TOTAL SHEETS

REGISTERED CIVIL ENGINEER

September 18, 2026
PLANS APPROVAL DATE

REGISTERED PROFESSIONAL ENGINEER Carl M. Duan No. C59976 Exp. 6-30-28 CIVIL STATE OF CALIFORNIA

THE STATE OF CALIFORNIA OR ITS OFFICERS OR AGENTS SHALL NOT BE RESPONSIBLE FOR THE ACCURACY OR COMPLETENESS OF SCANNED COPIES OF THIS PLAN SHEET.

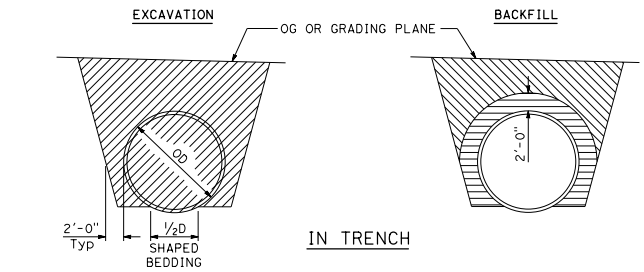

IN TRENCH

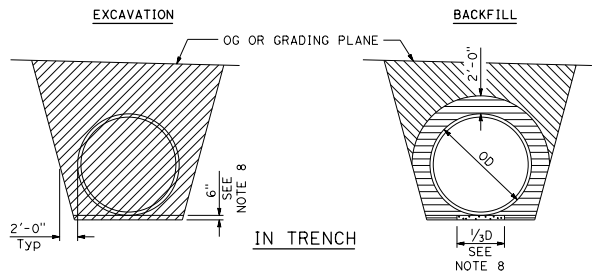

IN TRENCH

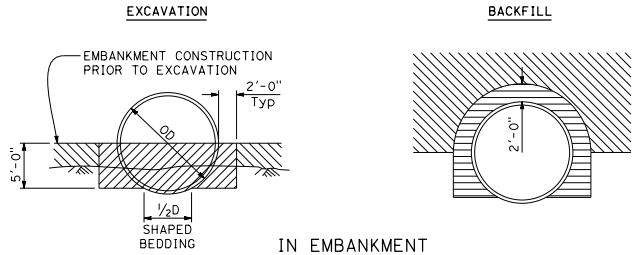

IN EMBANKMENT

PIPES

Larger than 84"

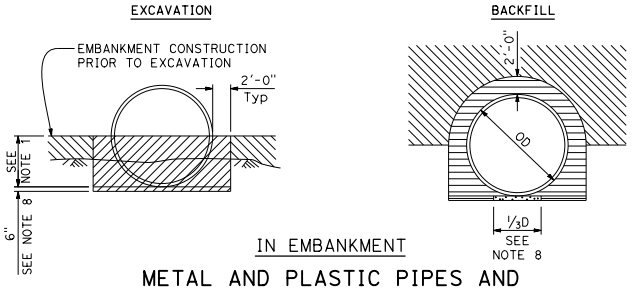

IN EMBANKMENT

METAL AND PLASTIC PIPES AND CORRUGATED METAL PIPE ARCHES

84" or Smaller

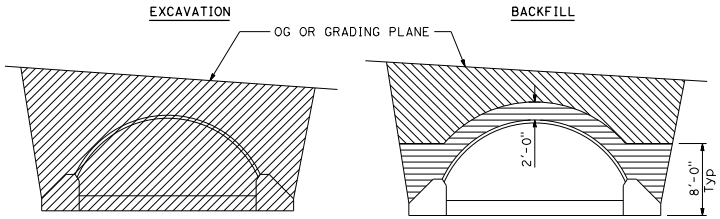

IN TRENCH

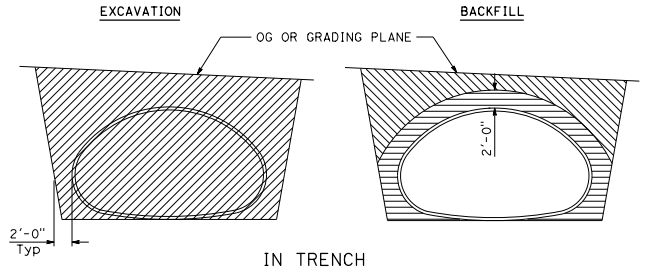

IN TRENCH

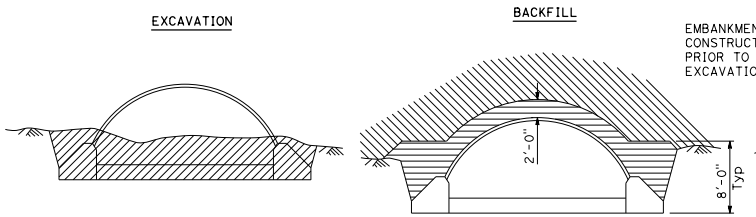

IN EMBANKMENT

STRUCTURAL STEEL PLATE ARCHES

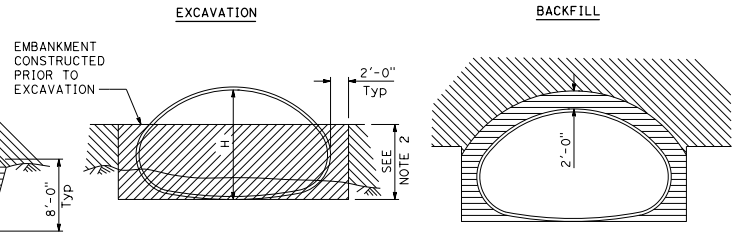

IN EMBANKMENT

STRUCTURAL STEEL PLATE PIPE ARCHES AND VEHICULAR UNDERCROSSING

NOTES:

1. PIPES: 30" minimum for diameters up to and including 42" then ⅔ diameter but no more than 60" required. CORRUGATED METAL PIPE ARCHES: 30" maximum.
2. ⅔ H up to 60" maximum.
3. Slope or shore excavation sides as necessary.
4. Backfill shall be placed full width of excavation except as noted.
5. Diagrams do not apply to overside drains.
6. Dimensions shown are minimum.
7. Construction strutting of structural steel plate pipe, arches and vehicular undercrossing to be used when shown on the project plans. When shown, see Standard Plan D88A for strutting requirements.
8. Excavation below pipe and 80% relative compaction requirements for plastic pipes only.
9. D is the inside diameter (ID) of the pipe.

LEGEND:

- STRUCTURE EXCAVATION (CULVERT)
- STRUCTURE BACKFILL (CULVERT) 95% RELATIVE COMPACTION
- STRUCTURE BACKFILL (CULVERT) 80% RELATIVE COMPACTION
- ROADWAY EMBANKMENT

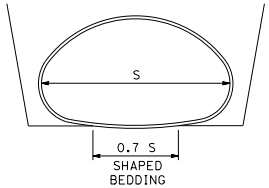

SHAPED BEDDING

S = Larger than 84"

STATE OF CALIFORNIA
DEPARTMENT OF TRANSPORTATION

EXCAVATION AND BACKFILL METAL AND PLASTIC CULVERTS

NO SCALE

A62F

7-1-26

Return to Table of Contents

Dist	COUNTY	ROUTE	POST MILES TOTAL PROJECT	SHEET No.	TOTAL SHEETS

REGISTERED CIVIL ENGINEER

September 18, 2026
PLANS APPROVAL DATE

REGISTERED PROFESSIONAL ENGINEER
Carl M. Duan
No. C59976
Exp. 6-30-28
CIVIL
STATE OF CALIFORNIA

THE STATE OF CALIFORNIA OR ITS OFFICERS OR AGENTS SHALL NOT BE RESPONSIBLE FOR THE ACCURACY OR COMPLETENESS OF SCANNED COPIES OF THIS PLAN SHEET.

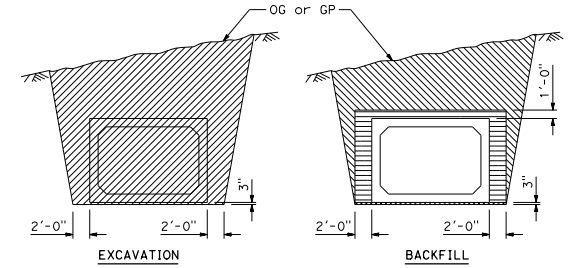

IN TRENCH

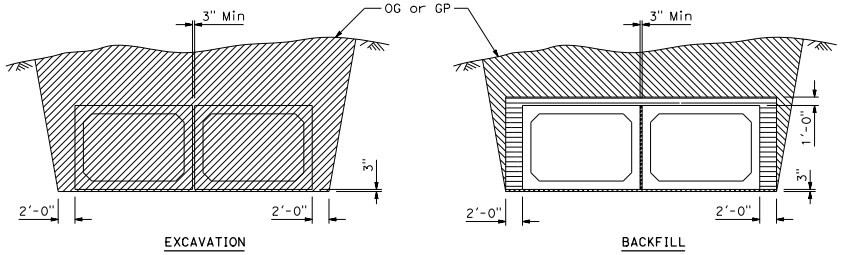

IN TRENCH

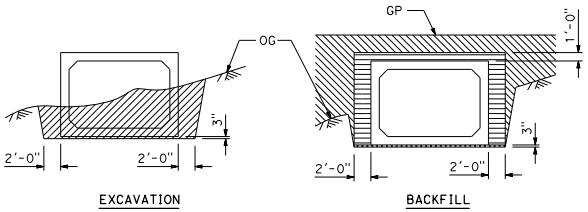

IN EMBANKMENT

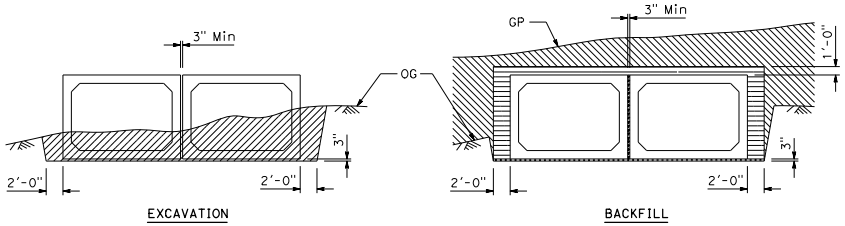

IN EMBANKMENT

FILL HEIGHT GREATER THAN 2'-0"

NOTES:

1. Slope or shore excavation sides as necessary.
2. Dimensions shown are minimum.
3. Methods 2 and 3 for single or multiple boxes requires an approved external sealing band. See Standard Plan D83A.
4. Construction of Roadway Pavement Structure in Method 2 or Method 3 shall not disturb the external sealing band installation.

LEGEND:

- STRUCTURE EXCAVATION (CULVERT)
- STRUCTURE BACKFILL (CULVERT) 95% RELATIVE COMPACTION
- ROADWAY EMBANKMENT
- SLURRY CEMENT BACKFILL
- SAND BEDDING (CULVERT)
- ROADWAY PAVEMENT STRUCTURE

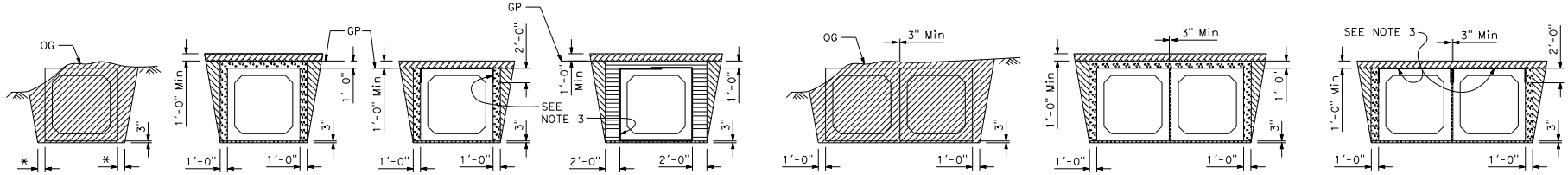

FILL HEIGHT 2'-0" OR LESS

* 1'-0" Where Method 1 or 2 Backfill is used.
2'-0" Where Method 3 Backfill is used.

STATE OF CALIFORNIA
DEPARTMENT OF TRANSPORTATION

EXCAVATION AND BACKFILL PRECAST REINFORCED CONCRETE BOX CULVERT

NO SCALE

A62G

2026 STANDARD PLAN A62G

7-1-26

Return to Table of Contents

Dist	COUNTY	ROUTE	POST MILES TOTAL PROJECT	SHEET No.	TOTAL SHEETS

Jawad Naderi
REGISTERED CIVIL ENGINEER

September 18, 2026
PLANS APPROVAL DATE

REGISTERED PROFESSIONAL ENGINEER
Mohammad Jawad Naderi
No. C96340
Exp. 9-30-26
CIVIL
STATE OF CALIFORNIA

THE STATE OF CALIFORNIA OR ITS OFFICERS OR AGENTS SHALL NOT BE RESPONSIBLE FOR THE ACCURACY OR COMPLETENESS OF SCANNED COPIES OF THIS PLAN SHEET.

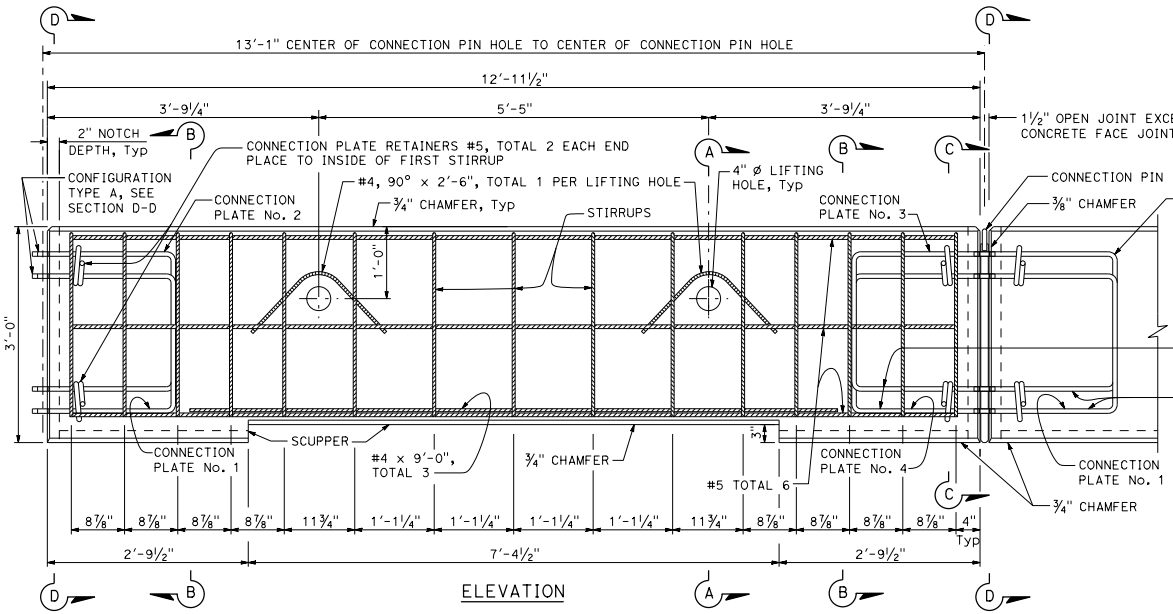

ELEVATION
"N" PANEL
See Note 1

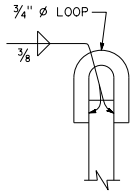

DETAIL A

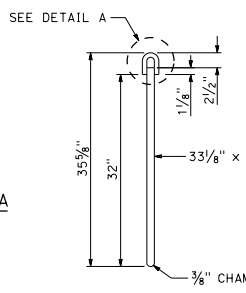

ELEVATION
CONNECTION PIN

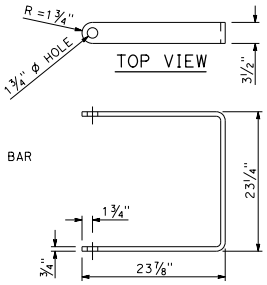

SIDE VIEW
CONNECTION PLATE

NOTES:

1. Portable concrete barrier (Type 60K) consists of a layout of interconnected precast panels of the following types:

   "N" Panels - Notched concrete end at both ends of panel. Majority of panels used for portable (Type 60K) barrier are "N" Panels.

   "T" Panels - Notched concrete end at one end of the panel and a vertical concrete face at the other end of the panel. Used to connect "N" Panels to the "R" Panels.

   "R" Panels - Vertical concrete face at both ends of the panel. Used between "T" Panels. Also connects to vertical concrete end of "T" Panels and vertical concrete end of the connection to permanent concrete barrier.

   For Details of "T" and "R" Panels and Typical layouts of portable concrete barrier (Type 60K), see Standard Plan A63B.

2. Connection Plate Configurations Type A and Type B apply to "N", "T" and "R" Panels. The ends of Connection Plate No. 3 overlap the ends of Connection Plate No. 1. The ends of Connection Plate No. 4 overlap the ends of Connection Plate No. 2. One connection pin inserted through the holes in Connection Plates No. 3 and No. 1 and the other connection pin inserted through the holes in Connection Plates No. 4 and No. 2.

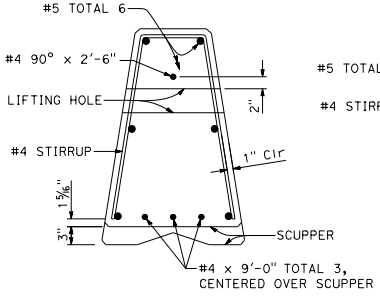

SECTION A-A

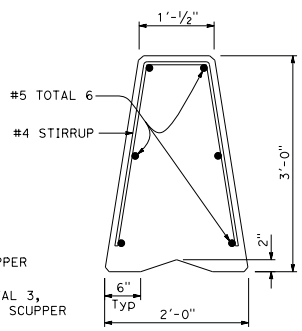

SECTION B-B

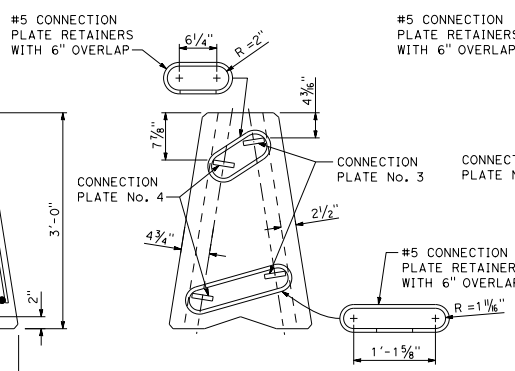

SECTION C-C
Connection Plate Configuration Type B, see Note 2

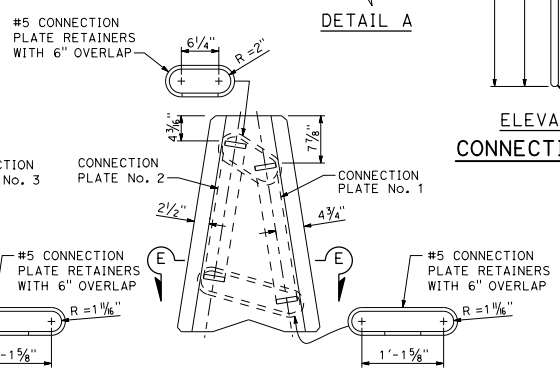

SECTION D-D
Connection Plate Configuration Type A, see Note 2

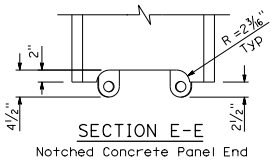

SECTION E-E
Notched Concrete Panel End

STATE OF CALIFORNIA
DEPARTMENT OF TRANSPORTATION

PORTABLE CONCRETE BARRIER (TYPE 60K)

NO SCALE

A63A

2026 STANDARD PLAN A63A

7-1-26

Return to Table of Contents

Dist	COUNTY	ROUTE	POST MILES TOTAL PROJECT	SHEET No.	TOTAL SHEETS

Jawad Naderi
REGISTERED CIVIL ENGINEER

September 18, 2026
PLANS APPROVAL DATE

REGISTERED PROFESSIONAL ENGINEER
Mohammad Jawad Naderi
No. C96340
Exp. 9-30-26
CIVIL
STATE OF CALIFORNIA

THE STATE OF CALIFORNIA OR ITS OFFICERS OR AGENTS SHALL NOT BE RESPONSIBLE FOR THE ACCURACY OR COMPLETENESS OF SCANNED COPIES OF THIS PLAN SHEET.

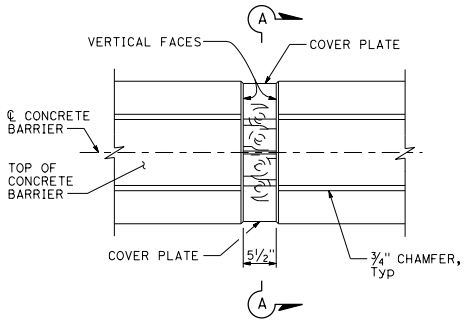

TOP VIEW

VERTICAL CONCRETE FACE JOINTS

Connection pins not shown in this view.

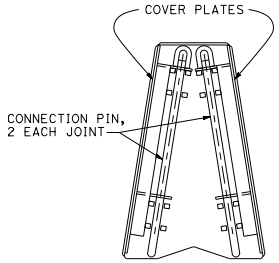

SECTION A-A

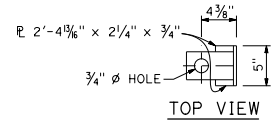

TOP VIEW

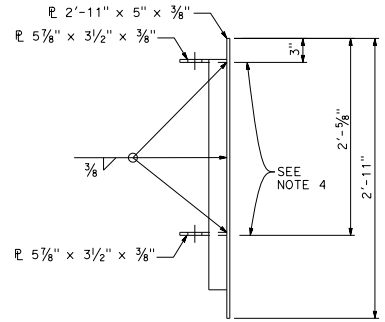

SIDE VIEW

COVER PLATE

NOTES:

1. "R" Panels are to be placed at a maximum of 10 panel segment intervals and at connections to permanent concrete barrier. "R" panels provide for quick and easy placement and removal by lateral movement of panel (NO Notched Ends). "N" Panels have concrete notches at each end of the panel. "T" panels have a concrete notch at one end of the panel and a vertical face at the other end of the panel. Notched end connections plus overlapping connection plates require longitudinal movement of the panels during placement or removal. If portable concrete barrier (Type 60K) is to be removed after installation, "R" panels are to be removed first to facilitate removal of the remaining panels.
2. Reinforcement and dimensioning details for "R" and "T" Panels are similar to the "N" Panel details shown on Standard Plan A63A.
3. Modify end of permanent concrete barrier with the installation of connection plates for connection pins and cover plates. Remove 2' of existing Type 60 permanent concrete barrier to install connection plates for "R" Panel connection. Where the connection to existing barrier requires a height transition, remove existing barrier to end of the height transition.
4. Dimension to bottom of the 5⅞" x 3½" x ⅜" plate.
5. For additional details of connection plate configurations, see Sections C-C and D-D of Standard Plan A63A.

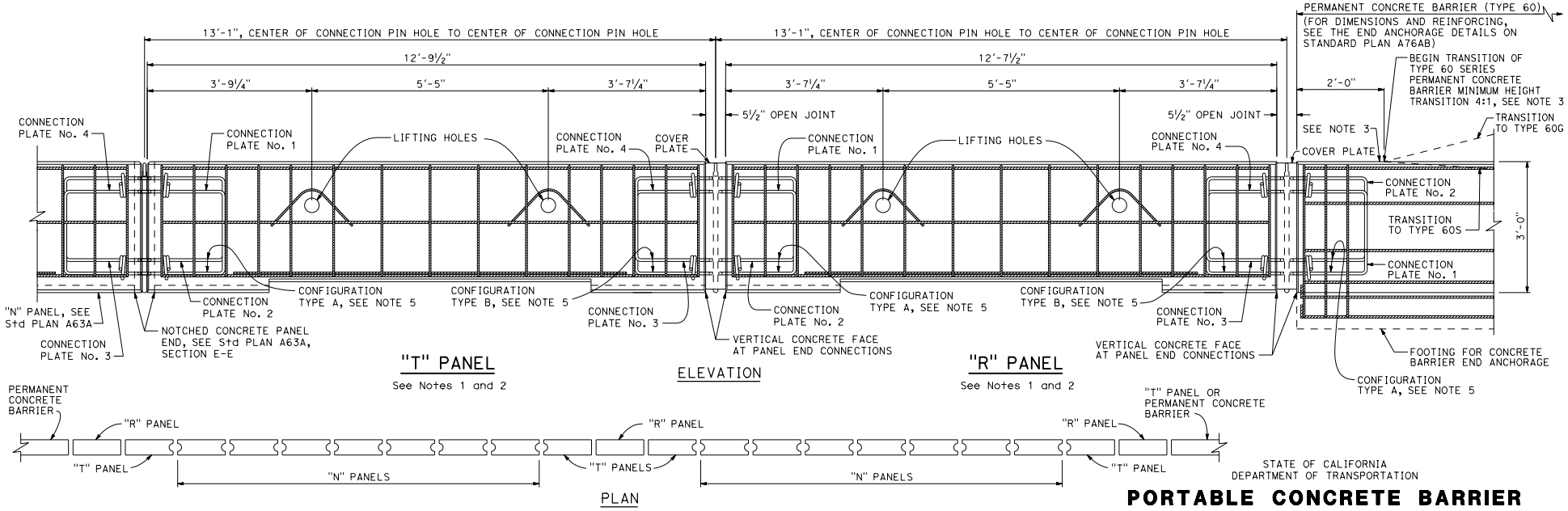

PLAN

TYPICAL PORTABLE CONCRETE BARRIER (TYPE 60K) LAYOUT

See Note 1

STATE OF CALIFORNIA
DEPARTMENT OF TRANSPORTATION

PORTABLE CONCRETE BARRIER (TYPE 60K)

NO SCALE

A63B

7-1-26

2026 STANDARD PLAN A63B

Return to Table of Contents

Dist	COUNTY	ROUTE	POST MILES TOTAL PROJECT	SHEET No.	TOTAL SHEETS

Mario Lozano
REGISTERED CIVIL ENGINEER

September 18, 2026
PLANS APPROVAL DATE

REGISTERED PROFESSIONAL ENGINEER
Mario Lozano-Cisneros
No. C94626
Exp. 3-31-27
CIVIL
STATE OF CALIFORNIA

THE STATE OF CALIFORNIA OR ITS OFFICERS OR AGENTS SHALL NOT BE RESPONSIBLE FOR THE ACCURACY OR COMPLETENESS OF SCANNED COPIES OF THIS PLAN SHEET.

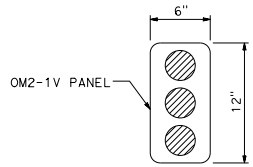

ALTERNATE PANEL

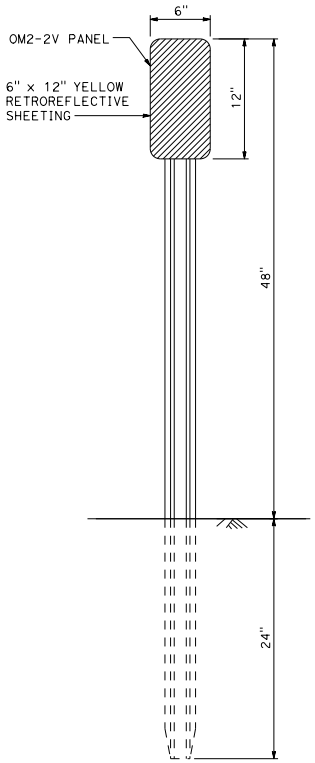

TYPE 2-V (METAL POST)

See Standard Plan A73B for metal post detail

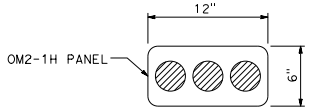

ALTERNATE PANEL

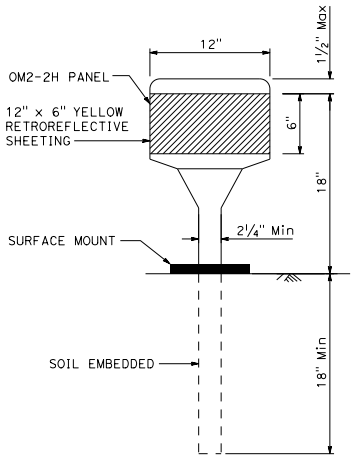

TYPE 2-H (FLEXIBLE POST)

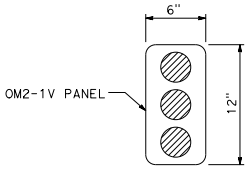

ALTERNATE PANEL

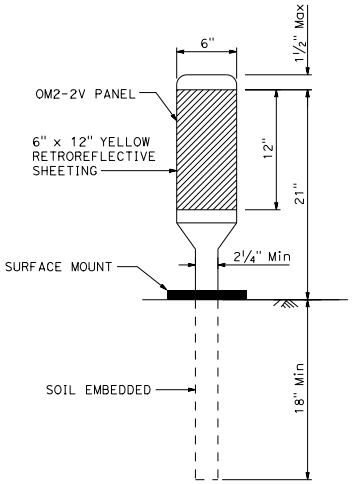

TYPE 2-V (FLEXIBLE POST)

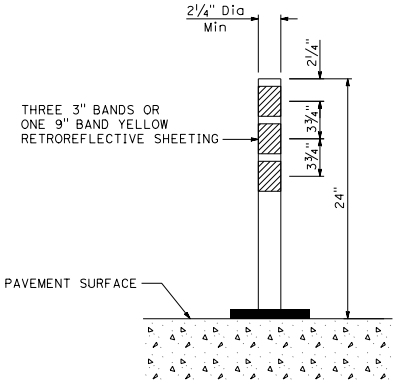

TYPE Q (CA)

Tubular flexible post surface mount

TYPE 2 OBJECT MARKERS

STATE OF CALIFORNIA
DEPARTMENT OF TRANSPORTATION

OBJECT MARKERS

NO SCALE

A73A

2026 STANDARD PLAN A73A

7-1-26

Return to Table of Contents

Dist	COUNTY	ROUTE	POST MILES TOTAL PROJECT	SHEET No.	TOTAL SHEETS

Mario Lozano
REGISTERED CIVIL ENGINEER

September 18, 2026
PLANS APPROVAL DATE

REGISTERED PROFESSIONAL ENGINEER Mario Lozano-Cisneros No. C94626 Exp. 3-31-27 CIVIL STATE OF CALIFORNIA

THE STATE OF CALIFORNIA OR ITS OFFICERS OR AGENTS SHALL NOT BE RESPONSIBLE FOR THE ACCURACY OR COMPLETENESS OF SCANNED COPIES OF THIS PLAN SHEET.

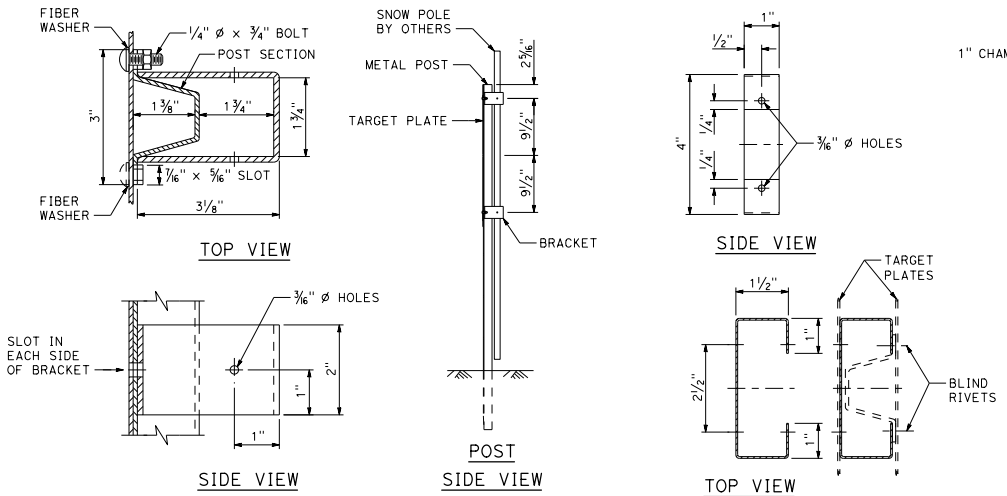

SNOW POLE BRACKET

TWO PLATE POST MOUNT

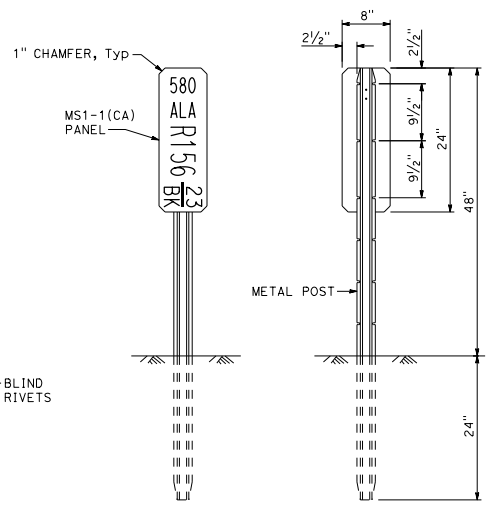

MILEPOST MARKER

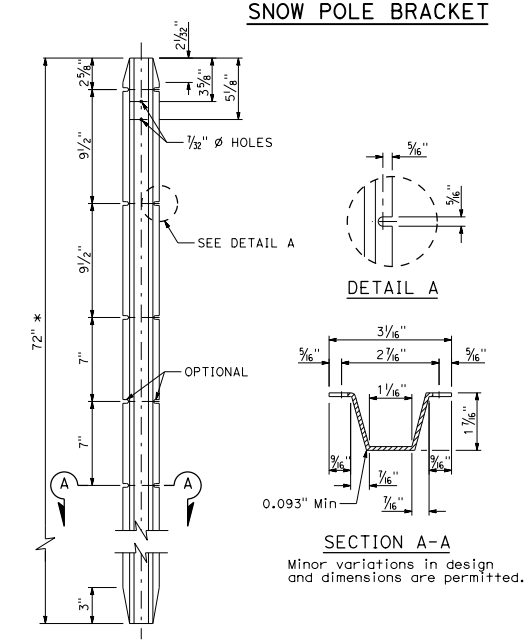

METAL POST DETAIL

* 8'-0" for Type 3 object marker

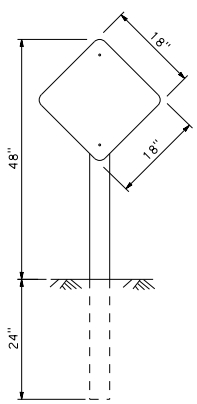

TYPE 1, TYPE 4 OBJECT MARKERS

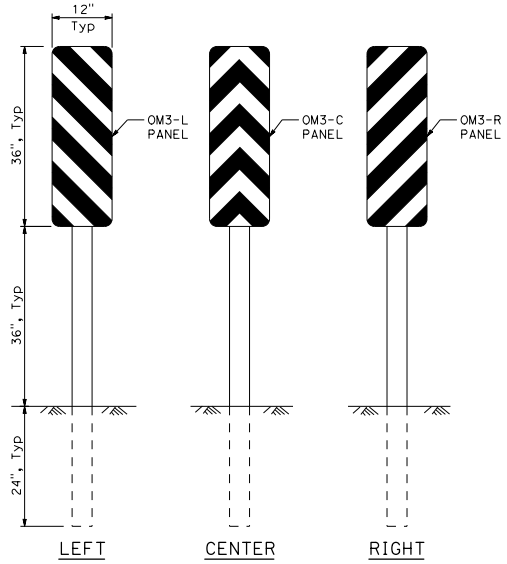

TYPE 3 OBJECT MARKERS

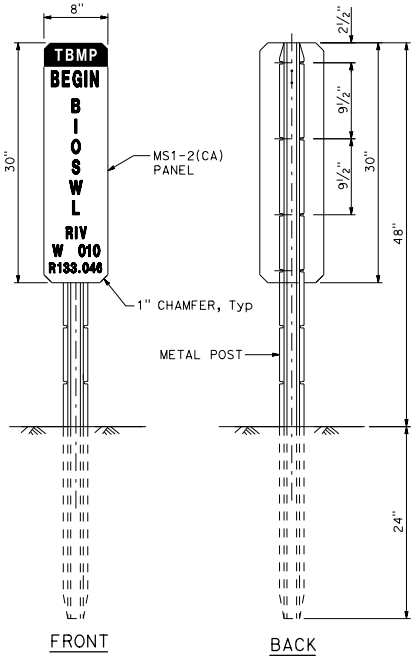

TREATMENT BEST MANAGEMENT PRACTICE (TBMP) MARKER

STATE OF CALIFORNIA
DEPARTMENT OF TRANSPORTATION

MARKERS

NO SCALE

A73B

2026 STANDARD PLAN A73B

7-1-26

Return to Table of Contents

Dist	COUNTY	ROUTE	POST MILES TOTAL PROJECT	SHEET No.	TOTAL SHEETS

REGISTERED CIVIL ENGINEER

September 18, 2026
PLANS APPROVAL DATE

REGISTERED PROFESSIONAL ENGINEER
Mike Malyy
No. C83437
Exp. 3-31-27
CIVIL
STATE OF CALIFORNIA

THE STATE OF CALIFORNIA OR ITS OFFICERS OR AGENTS SHALL NOT BE RESPONSIBLE FOR THE ACCURACY OR COMPLETENESS OF SCANNED COPIES OF THIS PLAN SHEET.

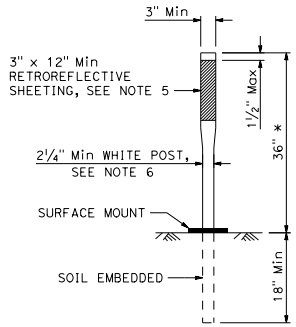

CHANNELIZERS

* 36" Min where speeds are 40 mph or less.

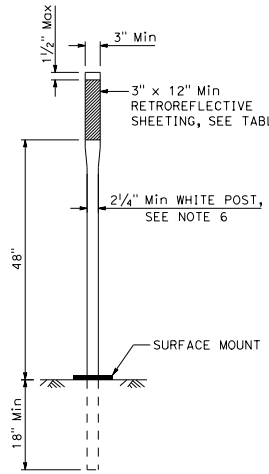

CLASS 1
FLEXIBLE POST

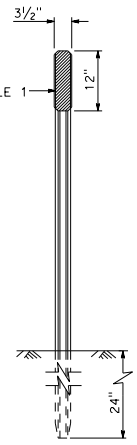

CLASS 2
METAL POST

See Note 4

DELINEATORS

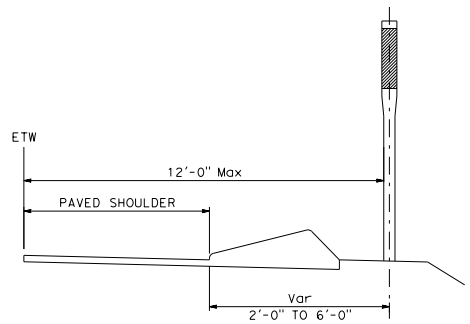

DELINEATOR POSITIONING

NOTES:

1. The retroreflective sheeting used on the back of delineator shall be a minimum size of 3" x 3".
2. The type of delineator to be installed will be designated on the plans.
3. All barricade stripes shall be retroreflective and sloped downward in the direction of the opened traffic lane.
4. See Standard Plan A73B for metal post details.
5. Unless shown otherwise on the plans, or as directed by the Engineer, the color of the retroreflective sheeting for permanent channelizers shall conform to the color of the pavement markings it supplements.
6. Except Class 1 (Flexible Post), temporary delineators and temporary channelizers in work zones shall be orange post with white retroreflective sheeting.

TABLE 1 DELINEATORS		
TYPE	RETROREFLECTIVE SHEETING	
	FRONT	BACK
E	WHITE	WHITE (SEE NOTE 1)
F	WHITE	NONE
G	YELLOW	NONE
J	RED	NONE

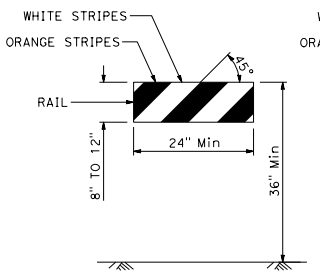

TYPE I

See Note A

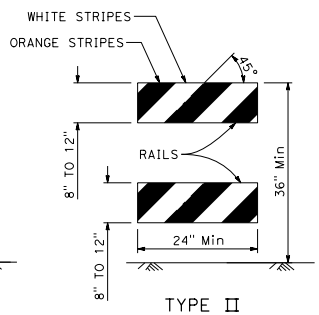

TYPE II

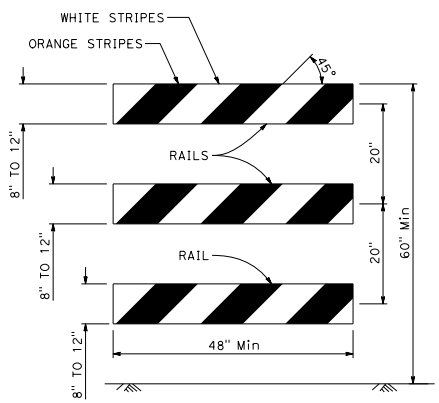

TYPE III

BARRICADES

See Note 3
Only face of rails shown. Barricade construction materials and supports as specified in the specifications.

TABLE 2 BARRICADES			
BARRICADE	TYPE I	TYPE II	TYPE III
WIDTH OF RAIL	8" Min - 12" Max *	8" Min - 12" Max *	8" Min - 12" Max *
LENGTH OF RAIL	24" Min	24" Min	48" Min
WIDTH OF STRIPES * *	6"	6"	6"
HEIGHT	36" Min	36" Min	60" Min
NUMBER OF RETROREFLECTIVE RAIL FACES	2 (ONE EACH DIRECTION)	4 (TWO EACH DIRECTION)	3 IF FACING TRAFFIC IN ONE DIRECTION 6 IF FACING TRAFFIC IN TWO DIRECTIONS

* For the wooden option dimensions are nominal lumber dimensions.
* * For rails less than 36" long, 4" wide stripes shall be used.

NOTE A:
Barricades to have a minimum of 270 square inches of retroreflective area facing traffic when used on freeways, expressways, and other high speed highways.

STATE OF CALIFORNIA
DEPARTMENT OF TRANSPORTATION

DELINEATORS, CHANNELIZERS, AND BARRICADES

NO SCALE

A73C

2026 STANDARD PLAN A73C

7-1-26

Return to Table of Contents

Dist	COUNTY	ROUTE	POST MILES TOTAL PROJECT	SHEET No.	TOTAL SHEETS

PROFESSIONAL LAND SURVEYOR

September 18, 2026
PLANS APPROVAL DATE

LICENSED LAND SURVEYOR Mark C. Sheehan No. 7610 Exp. 12-31-26 STATE OF CALIFORNIA

THE STATE OF CALIFORNIA OR ITS OFFICERS OR AGENTS SHALL NOT BE RESPONSIBLE FOR THE ACCURACY OR COMPLETENESS OF SCANNED COPIES OF THIS PLAN SHEET.

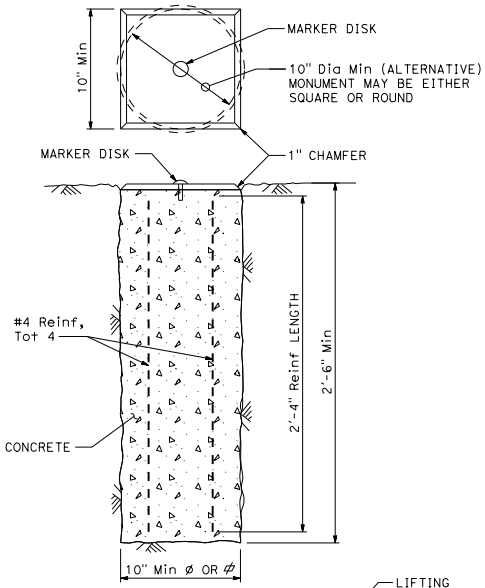

TYPE A

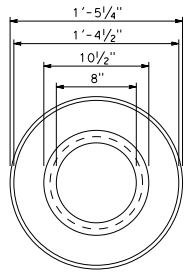

TOP VIEW OF WELL RING

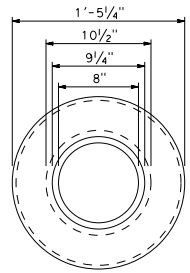

BOTTOM VIEW OF WELL RING

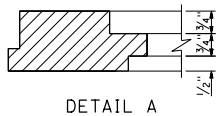

DETAIL A

MONUMENT WELL RING

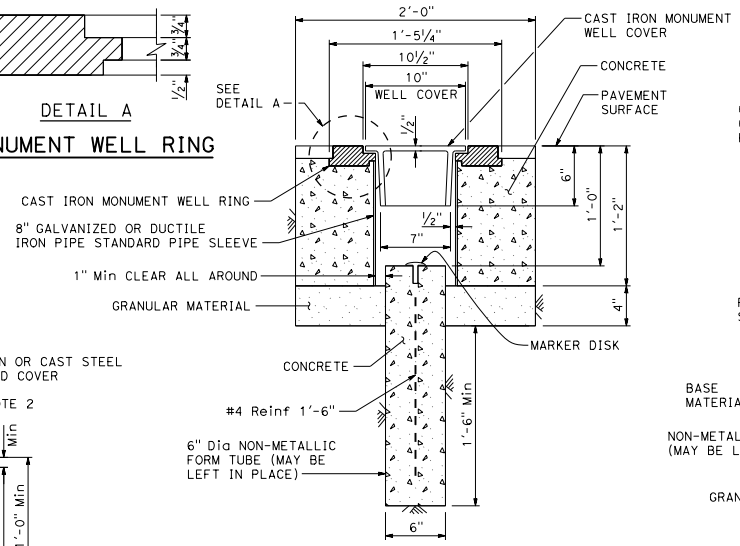

TYPE B

NOTES:

1. The configuration of the cast iron or cast steel frame and cover may vary from that shown.
2. Frame shall be embedded in the concrete a minimum of 3".

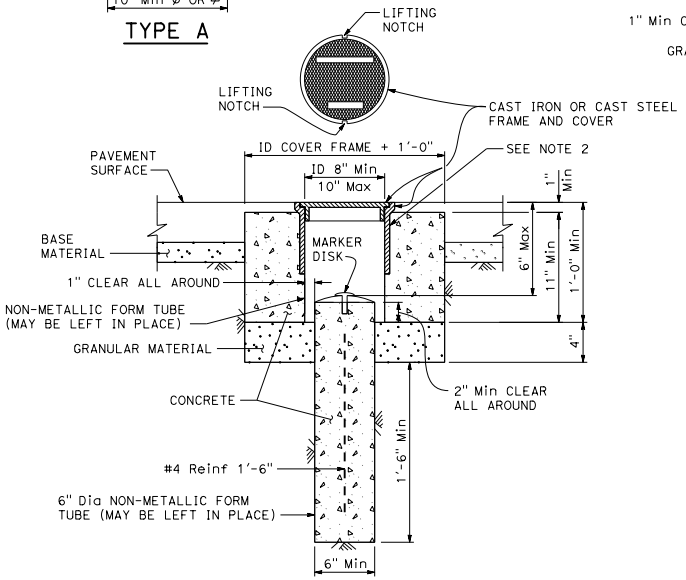

TYPE D
Alternative No. 1

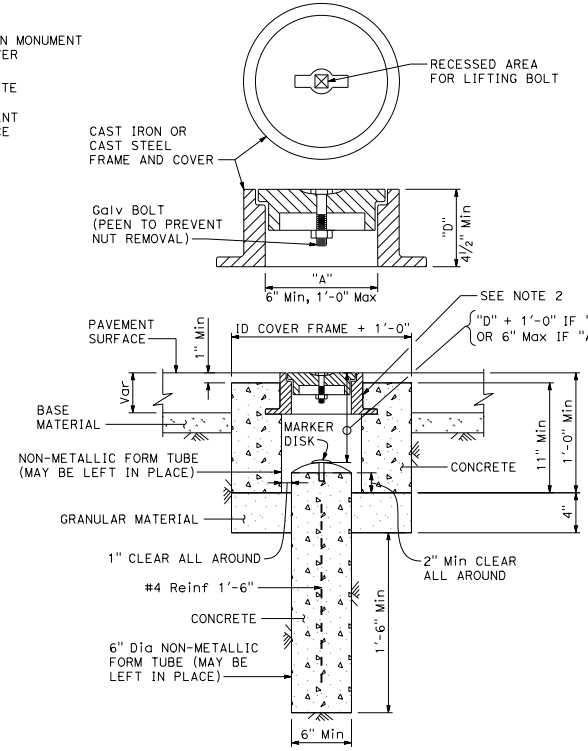

TYPE D
Alternative No. 2

STATE OF CALIFORNIA
DEPARTMENT OF TRANSPORTATION

SURVEY MONUMENTS

NO SCALE

A74

2026 STANDARD PLAN A74

7-1-26

Return to Table of Contents

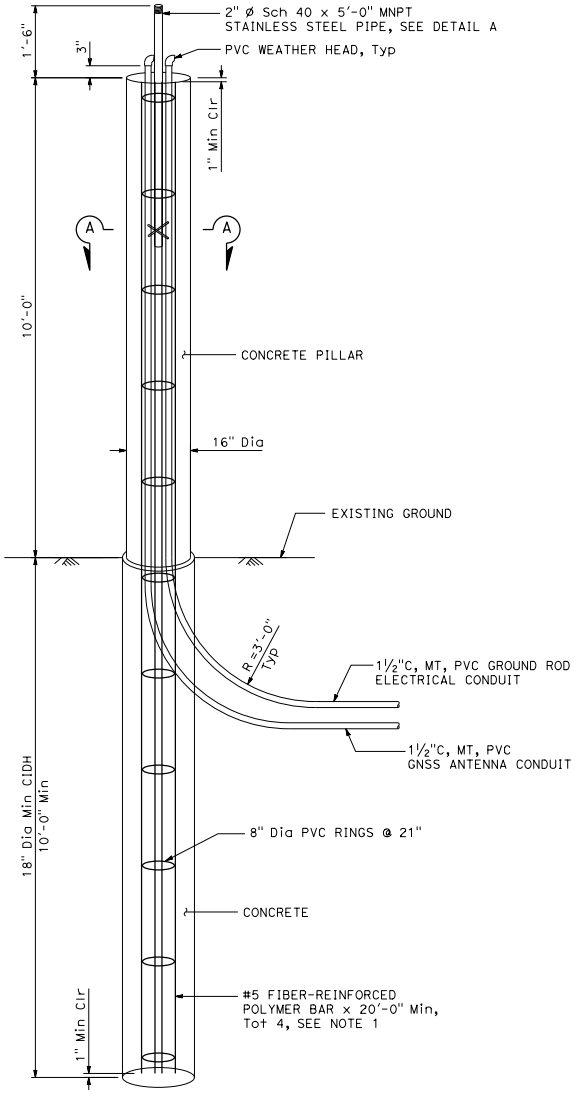

ELEVATION

GLOBAL NAVIGATION SATELLITE SYSTEM STATION

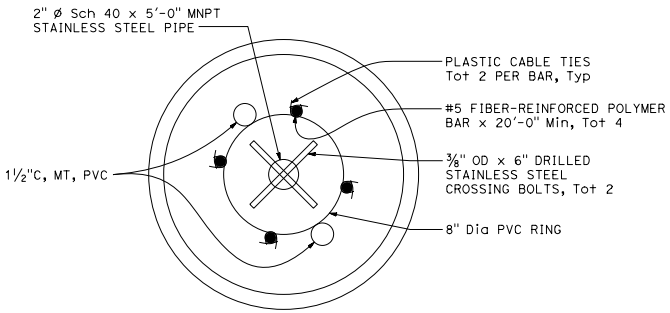

SECTION A-A

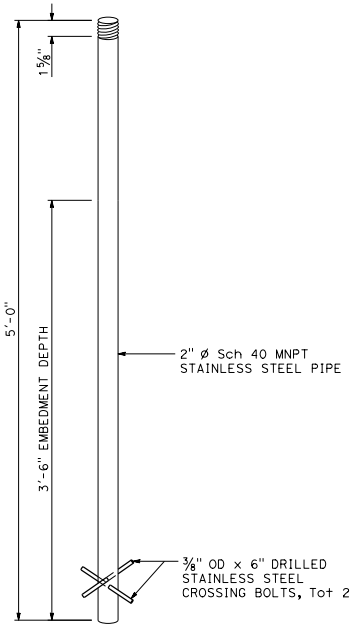

DETAIL A

Dist	COUNTY	ROUTE	POST MILES TOTAL PROJECT	SHEET No.	TOTAL SHEETS

Mark C. Sheehan
PROFESSIONAL LAND SURVEYOR

September 18, 2026
PLANS APPROVAL DATE

LICENSED LAND SURVEYOR
Mark C. Sheehan
No. 7610
Exp. 12-31-26
STATE OF CALIFORNIA

THE STATE OF CALIFORNIA OR ITS OFFICERS OR AGENTS SHALL NOT BE RESPONSIBLE FOR THE ACCURACY OR COMPLETENESS OF SCANNED COPIES OF THIS PLAN SHEET.

NOTE:

1. Stainless steel or epoxy coated bar of similar diameter may be substituted in place of fiber-reinforced polymer bar.

STATE OF CALIFORNIA
DEPARTMENT OF TRANSPORTATION

GLOBAL NAVIGATION SATELLITE SYSTEM STATION DETAILS

NO SCALE

A74A

2026 STANDARD PLAN A74A

7-1-26

Return to Table of Contents

Dist	COUNTY	ROUTE	POST MILES TOTAL PROJECT	SHEET No.	TOTAL SHEETS

Jawad Naderi
REGISTERED CIVIL ENGINEER

September 18, 2026
PLANS APPROVAL DATE

REGISTERED PROFESSIONAL ENGINEER
Mohammad Jawad Naderi
No. C96340
Exp. 9-30-26
CIVIL
STATE OF CALIFORNIA

THE STATE OF CALIFORNIA OR ITS OFFICERS OR AGENTS SHALL NOT BE RESPONSIBLE FOR THE ACCURACY OR COMPLETENESS OF SCANNED COPIES OF THIS PLAN SHEET.

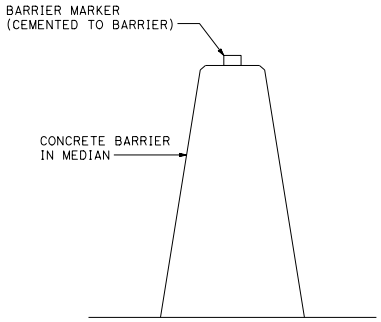

CONCRETE BARRIER TYPE 60M DELINEATION

See Note 5

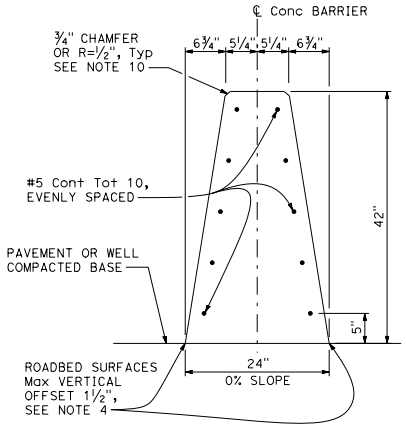

CONCRETE BARRIER TYPE 60M

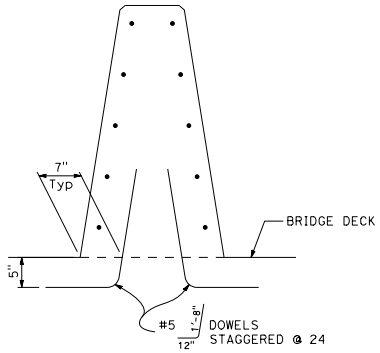

CONCRETE BARRIER TYPE 60MA

Details similar to Concrete Barrier Type 60M except as noted.

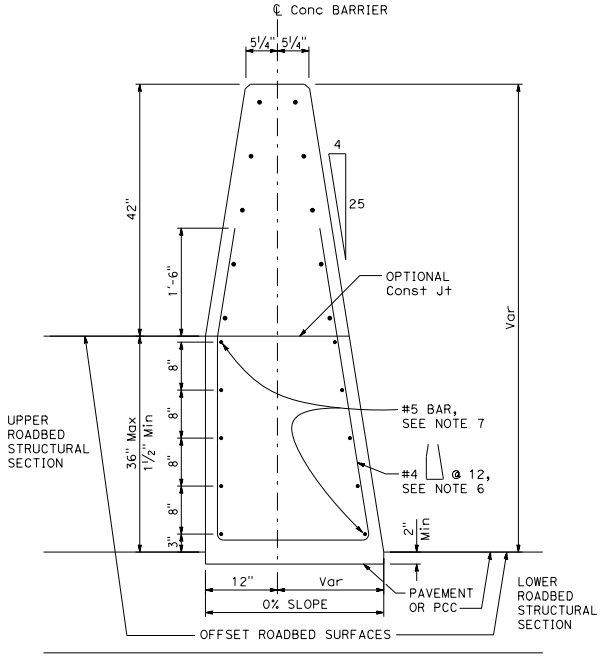

CONCRETE BARRIER TYPE 60MC

Details similar to Concrete Barrier Type 60M except as noted.
Use concrete barrier end anchor when necessary.
36" roadbed surfaces offset shown.

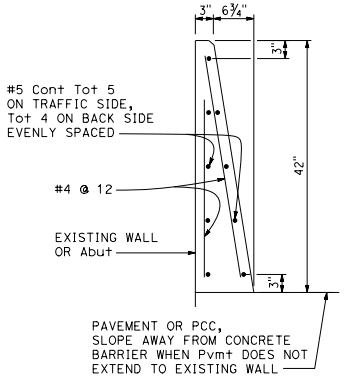

CONCRETE BARRIER TYPE 60MD

See Note 8

NOTES:

1. See Standard Plans A76AB and A76AC for details of Concrete Barrier Type 60M end anchors, connection to structures and transitions to Concrete Barrier Type 50 and Concrete Barrier Type 60MS.
2. See Standard Plan A76C for Concrete Barrier Type 60M transitions at bridge column and sign pedestals.
3. Where glare screen is required on Concrete Barrier Type 60M, use Concrete Barrier Type 60MG.
4. Where roadbed offset is greater than 1½", use concrete barrier Type 60MC.
5. See Project Plans for barrier delineation locations.
6. Reinforcing stirrup not required for roadbed offsets less than 1'-0".
7. For roadbed surfaces offset greater than 1½" and less than or equal to 3", no reinforcement required. For roadbed surfaces offset greater than 3" and less than or equal to 36", use two #5 reinforcement at 3" above the lower roadbed surface and two #5 reinforcement at every 8" increment vertical spacing above the first two #5 reinforcement.
8. For weep hole alignment and drainage details not shown, see Standard Plans B0-3 and B3-5.
9. Minimum length for Concrete Barrier Type 60 series is 100'-0", except minimum length for Concrete Barrier Type 60MA is 60'-0".
10. The ¾" chamfer or ½" radius is typical for all exposed edges for all Type 60 barriers, unless shown otherwise.

STATE OF CALIFORNIA
DEPARTMENT OF TRANSPORTATION

CONCRETE BARRIER TYPE 60M

NO SCALE

A76A

2026 STANDARD PLAN A76A

7-1-26

Return to Table of Contents

Dist	COUNTY	ROUTE	POST MILES TOTAL PROJECT	SHEET No.	TOTAL SHEETS

Jawad Naderi
REGISTERED CIVIL ENGINEER

September 18, 2026
PLANS APPROVAL DATE

REGISTERED PROFESSIONAL ENGINEER Mohammad Jawad Naderi No. C96340 Exp. 9-30-26 CIVIL STATE OF CALIFORNIA

THE STATE OF CALIFORNIA OR ITS OFFICERS OR AGENTS SHALL NOT BE RESPONSIBLE FOR THE ACCURACY OR COMPLETENESS OF SCANNED COPIES OF THIS PLAN SHEET.

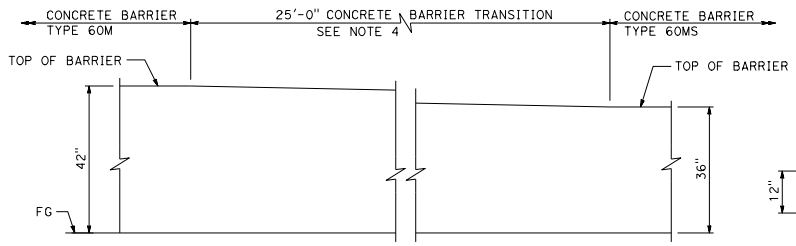

ELEVATION

TRANSITION CONCRETE BARRIER TYPE 60M TO CONCRETE BARRIER TYPE 60MS

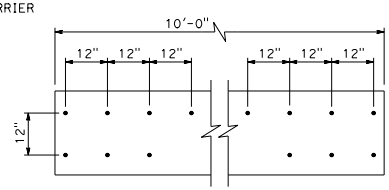

DETAIL A

Drill and Bond #6 dowel 6" deep and extend 16" into Concrete Barrier Type 60M

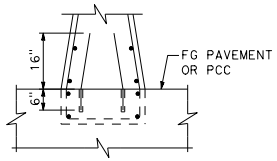

DETAIL B

Drill and Bond to existing PCC, see Note 2

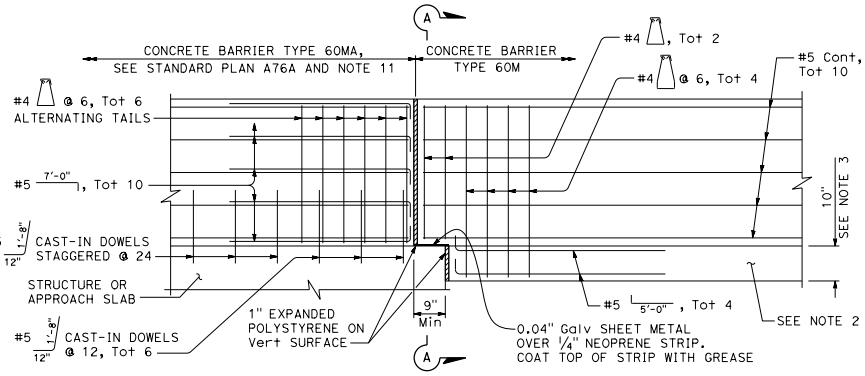

CONCRETE BARRIER TYPE 60M CONNECTION TO STRUCTURE

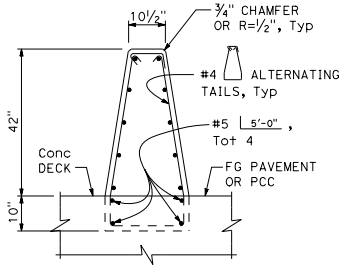

SECTION A-A

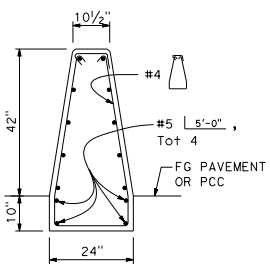

SECTION B-B

NOTES:

1. See Standard Plan A76A for Concrete Barrier Type 60M and Type 60MA.
2. Footing monolithic with barrier or Drill and Bond #6 dowel staggered as shown on Detail A and Detail B throughout 10'-0" length of footing. The footing is required at Concrete Barrier ends, midspan footings, and at interruptions in concrete barrier.
3. 10" Concrete Barrier footing extends 10'-0" back from structure.
4. See Standard Plan A76HA for transition to alternative crash cushion.
5. See Standard Plan A76A for details not shown including reinforcement in footing.
6. No scuppers or small animal crossings allowed within midspan footing.
7. Midspan footing is required for concrete barrier length of 1,000 feet or greater.
8. Midspan footings are placed between 400'-0" and 600'-0" of concrete barrier end and from each other.
9. Minimum length for Concrete Barrier Type 60M series is 100'-0".
10. Drop top lateral #5 horizontal reinforcement of Concrete Barrier Type 60 where transition height reaches 36".
11. Reinforcement shown is required at Concrete Barrier Type 60MA at each bridge expansion joint.

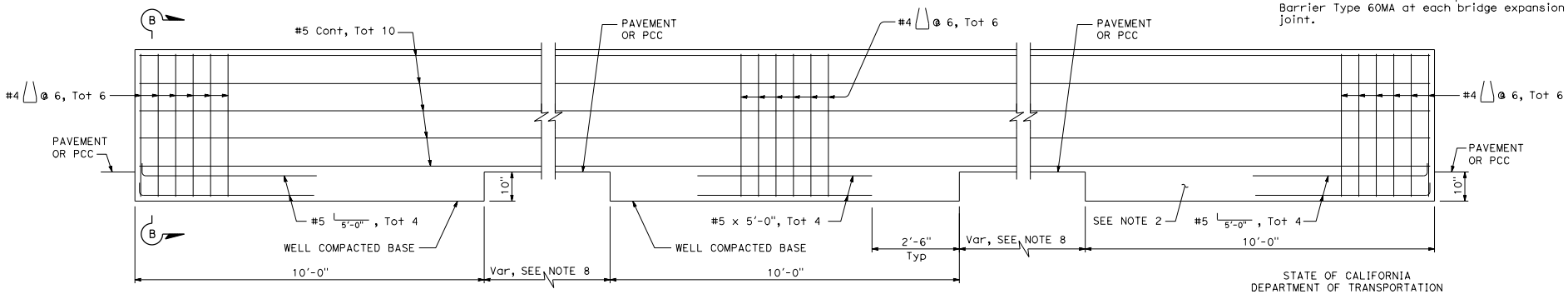

CONCRETE BARRIER TYPE 60M END ANCHORAGE, Typ

CONCRETE BARRIER MIDSPAN FOOTING DETAIL

STATE OF CALIFORNIA
DEPARTMENT OF TRANSPORTATION

CONCRETE BARRIER TYPE 60M DETAILS

NO SCALE

A76AB

2026 STANDARD PLAN A76AB

7-1-26

Return to Table of Contents

Dist	COUNTY	ROUTE	POST MILES TOTAL PROJECT	SHEET No.	TOTAL SHEETS

Jawad Naderi
REGISTERED CIVIL ENGINEER

September 18, 2026
PLANS APPROVAL DATE

REGISTERED PROFESSIONAL ENGINEER
Mohammad Jawad Naderi
No. C96340
Exp. 9-30-26
CIVIL
STATE OF CALIFORNIA

THE STATE OF CALIFORNIA OR ITS OFFICERS OR AGENTS SHALL NOT BE RESPONSIBLE FOR THE ACCURACY OR COMPLETENESS OF SCANNED COPIES OF THIS PLAN SHEET.

NOTES:

1. See Standard Plan A76A for Concrete Barrier Type 60M and Type 60MA.
2. Footing monolithic or doweled with #6 as shown on Standard Plan A76AB. The footing is required at concrete barrier ends, midspans, and at interruptions in concrete barrier.
3. Saw cut clean 1" deep and break back to preserve in place existing #4 reinforcement. Tie Lap to make continuous reinforcement and add #4 stirrup through splice length to hold in place.
4. See Standard Plan A76A for details not shown including reinforcement in footing.

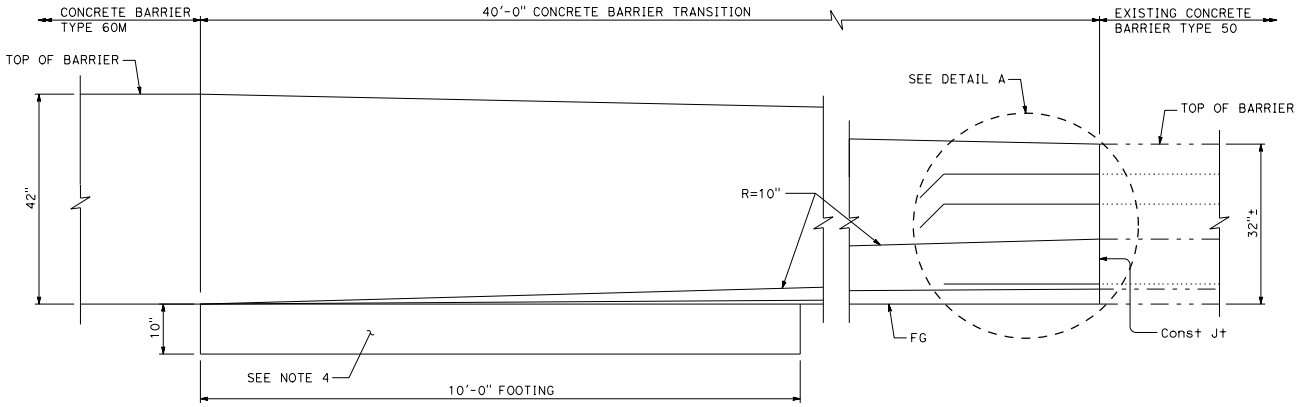

ELEVATION

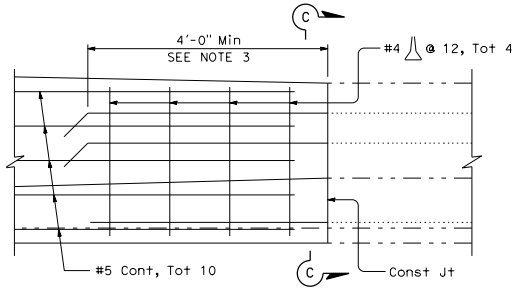

DETAIL A

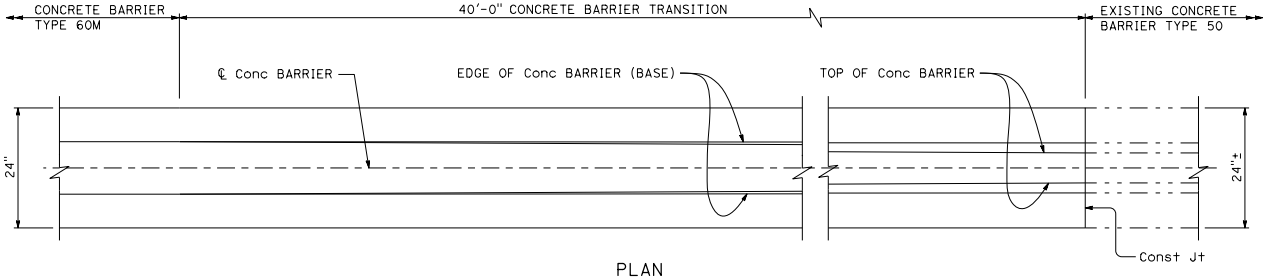

PLAN

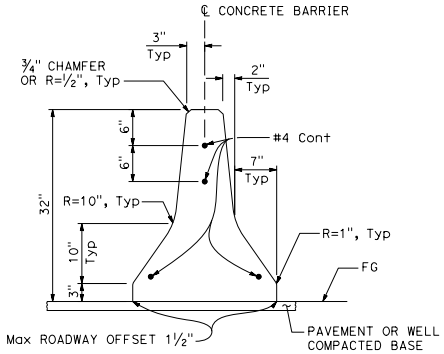

SECTION C-C

TRANSITION CONCRETE BARRIER TYPE 60M TO EXISTING CONCRETE BARRIER TYPE 50

STATE OF CALIFORNIA
DEPARTMENT OF TRANSPORTATION

CONCRETE BARRIER TYPE 60M TRANSITION TO CONCRETE BARRIER TYPE 50

NO SCALE

A76AC

7-1-26

2026 STANDARD PLAN A76AC

Return to Table of Contents

Dist	COUNTY	ROUTE	POST MILES TOTAL PROJECT	SHEET No.	TOTAL SHEETS

REGISTERED CIVIL ENGINEER

September 18, 2026

PLANS APPROVAL DATE

REGISTERED PROFESSIONAL ENGINEER Mahesh Shrestha No. C80133 Exp. 9-30-26 CIVIL STATE OF CALIFORNIA

THE STATE OF CALIFORNIA OR ITS OFFICERS OR AGENTS SHALL NOT BE RESPONSIBLE FOR THE ACCURACY OR COMPLETENESS OF SCANNED COPIES OF THIS PLAN SHEET.

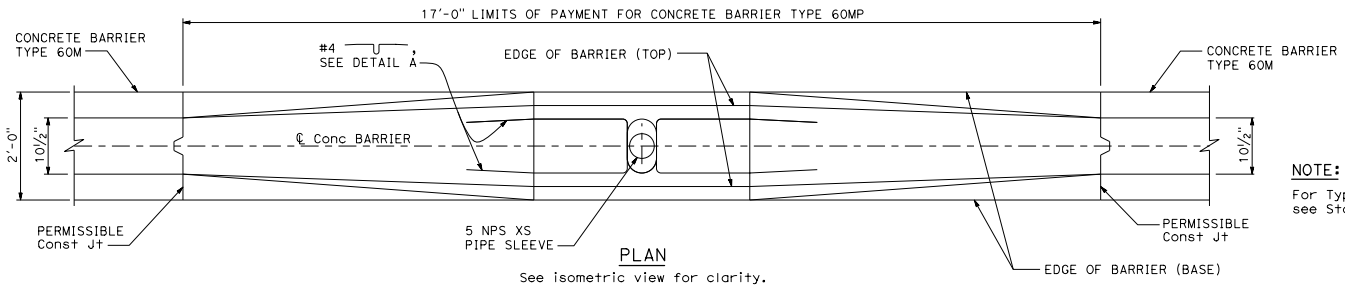

PLAN

See isometric view for clarity.

NOTE:

For Type 60M Barrier cross section, see Standard Plan A76A.

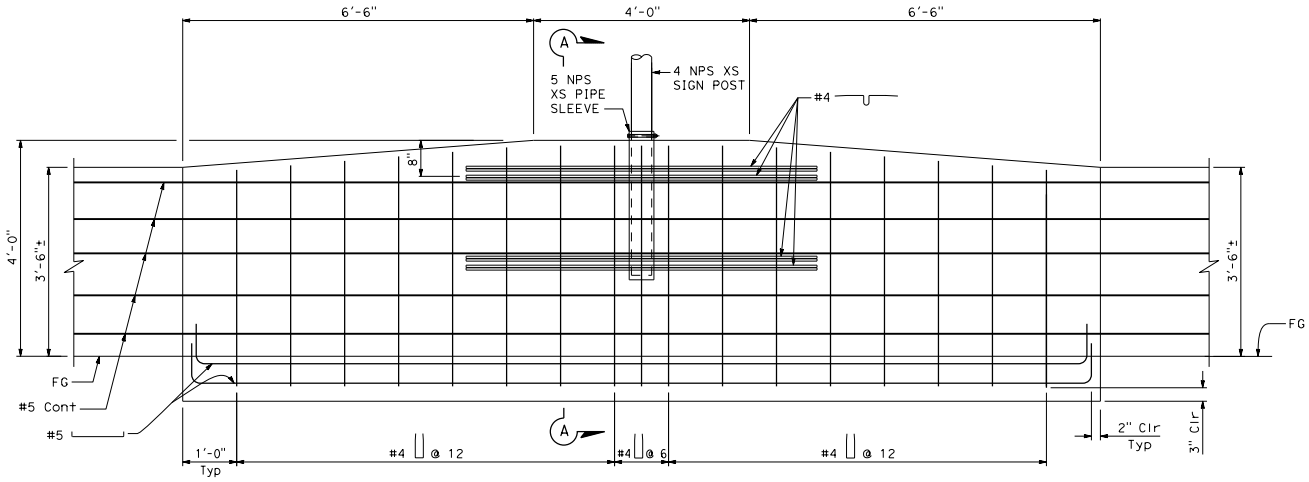

ELEVATION

Concrete face not shown for clarity, see isometric view.

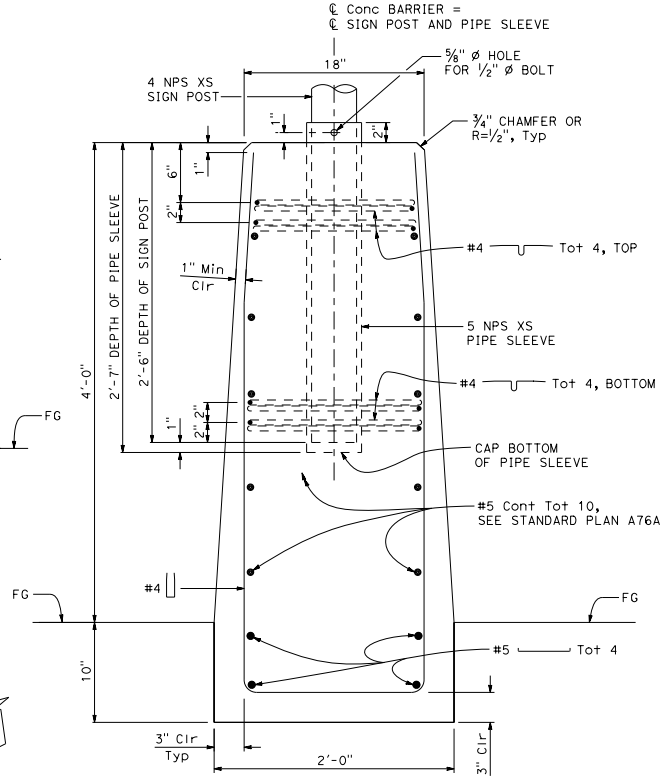

SECTION A-A

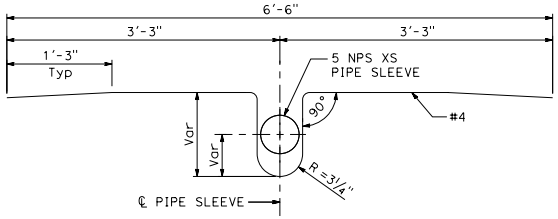

DETAIL A

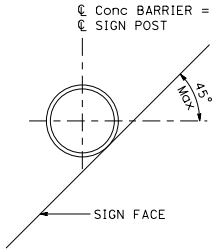

DETAIL B

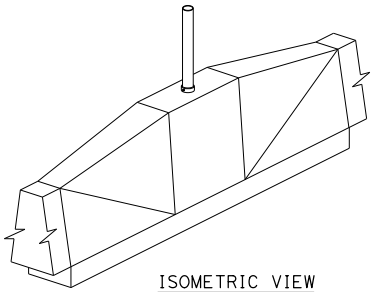

ISOMETRIC VIEW

STATE OF CALIFORNIA
DEPARTMENT OF TRANSPORTATION

CONCRETE BARRIER TYPE 60MP

NO SCALE

A76BA

2026 STANDARD PLAN A76BA

7-1-26

Return to Table of Contents

Dist	COUNTY	ROUTE	POST MILES TOTAL PROJECT	SHEET No.	TOTAL SHEETS

REGISTERED CIVIL ENGINEER

September 18, 2026

PLANS APPROVAL DATE

REGISTERED PROFESSIONAL ENGINEER Mahesh Shrestha No. C80133 Exp. 9-30-26 CIVIL STATE OF CALIFORNIA

THE STATE OF CALIFORNIA OR ITS OFFICERS OR AGENTS SHALL NOT BE RESPONSIBLE FOR THE ACCURACY OR COMPLETENESS OF SCANNED COPIES OF THIS PLAN SHEET.

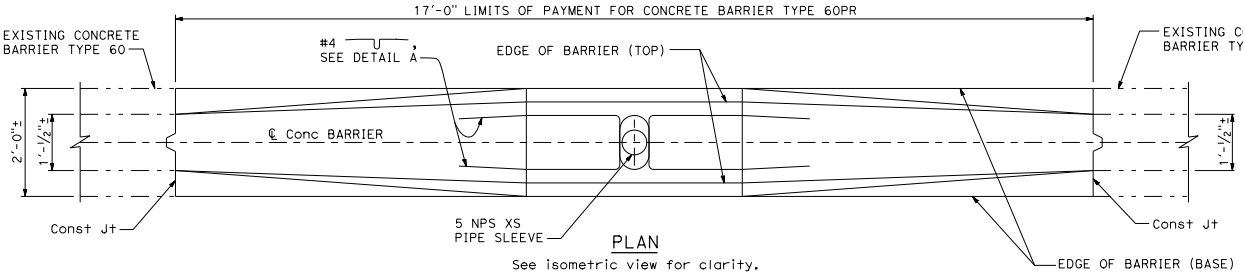

PLAN

See isometric view for clarity.

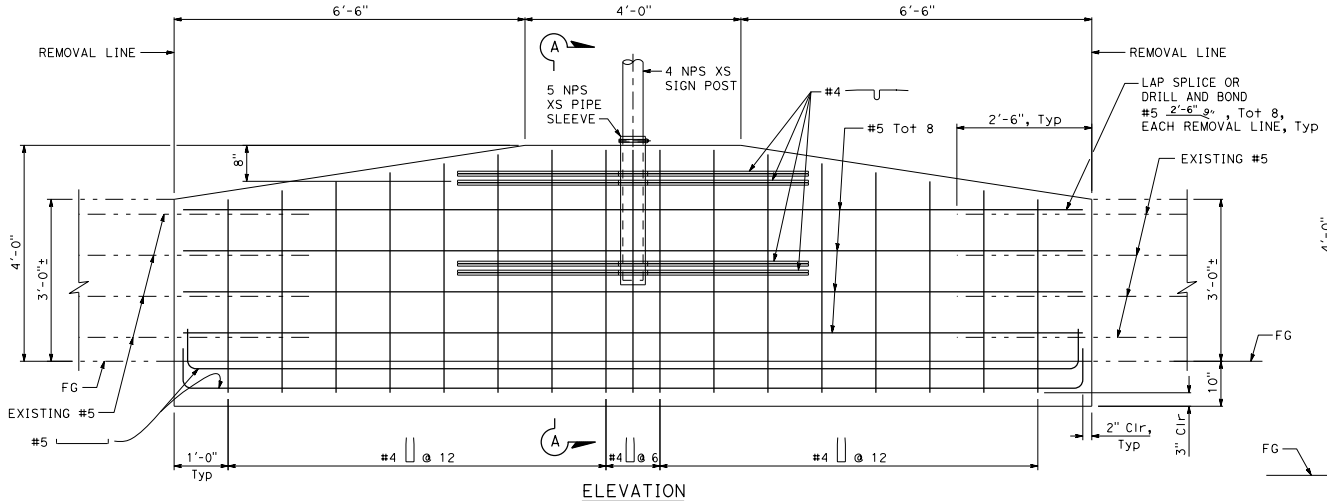

ELEVATION

Concrete face not shown for clarity, see isometric view.

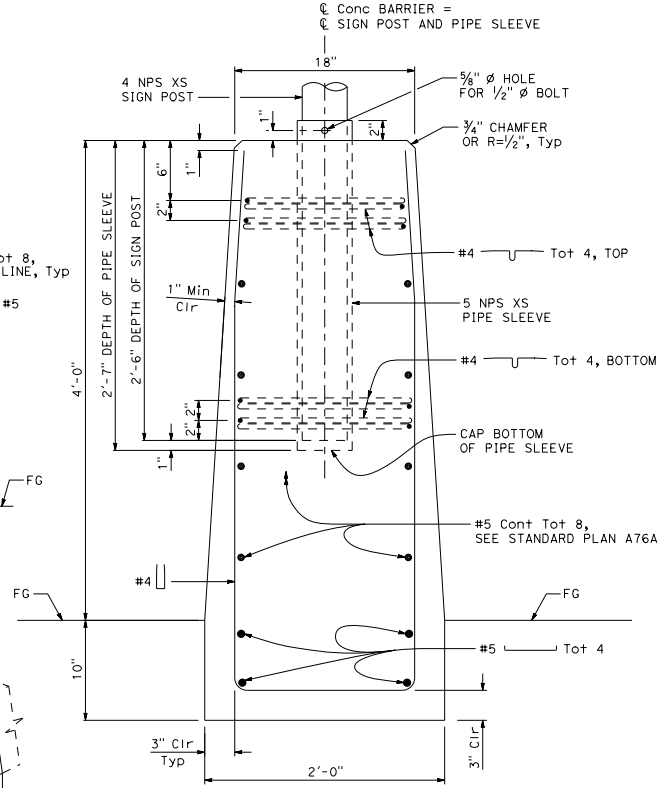

SECTION A-A

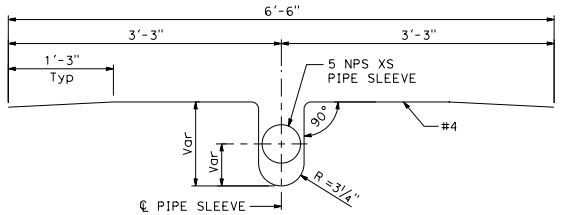

DETAIL A

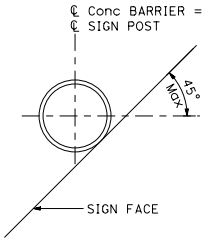

DETAIL B

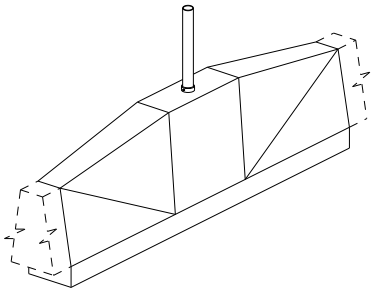

ISOMETRIC VIEW

NOTE:
The contractor must verify all controlling field dimensions before ordering or fabricating any material.

STATE OF CALIFORNIA
DEPARTMENT OF TRANSPORTATION

CONCRETE BARRIER TYPE 60PR

NO SCALE

A76BB

2026 STANDARD PLAN A76BB

7-1-26

Return to Table of Contents

Dist	COUNTY	ROUTE	POST MILES TOTAL PROJECT	SHEET No.	TOTAL SHEETS

REGISTERED CIVIL ENGINEER

September 18, 2026

PLANS APPROVAL DATE

REGISTERED PROFESSIONAL ENGINEER Mahesh Shrestha No. C80133 Exp. 9-30-26 CIVIL STATE OF CALIFORNIA

THE STATE OF CALIFORNIA OR ITS OFFICERS OR AGENTS SHALL NOT BE RESPONSIBLE FOR THE ACCURACY OR COMPLETENESS OF SCANNED COPIES OF THIS PLAN SHEET.

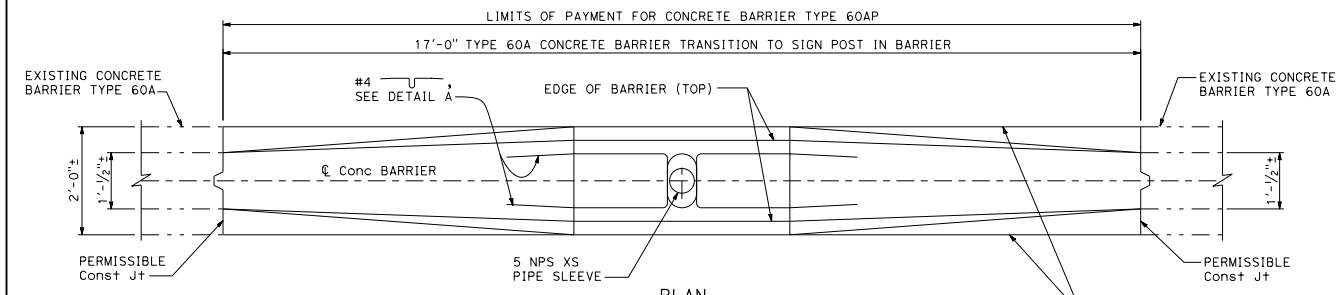

PLAN

See isometric view for clarity.

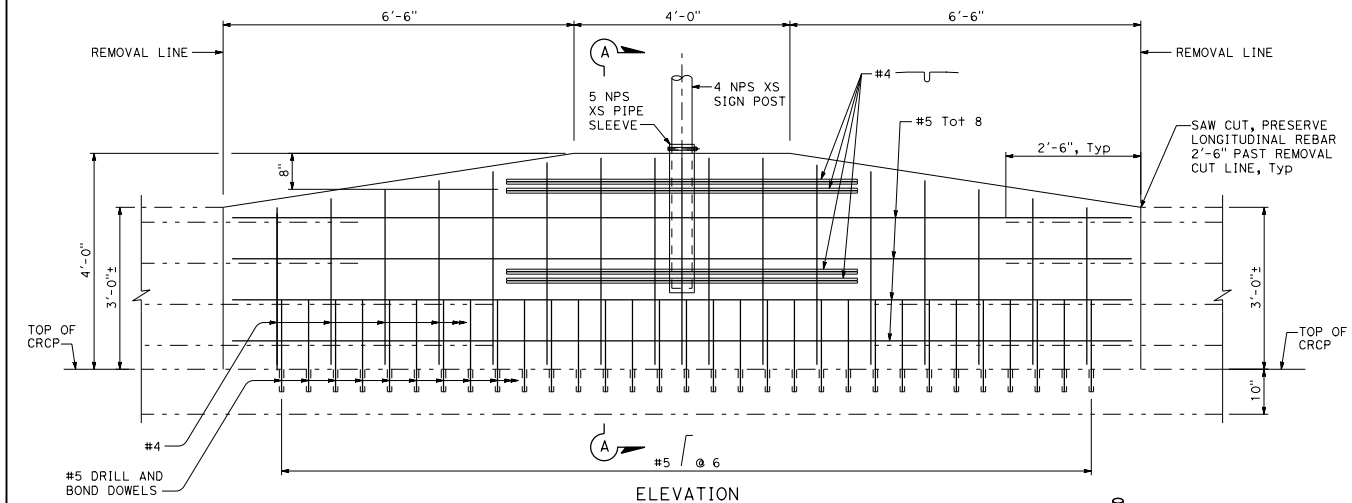

ELEVATION

Concrete face not shown for clarity, see isometric view.

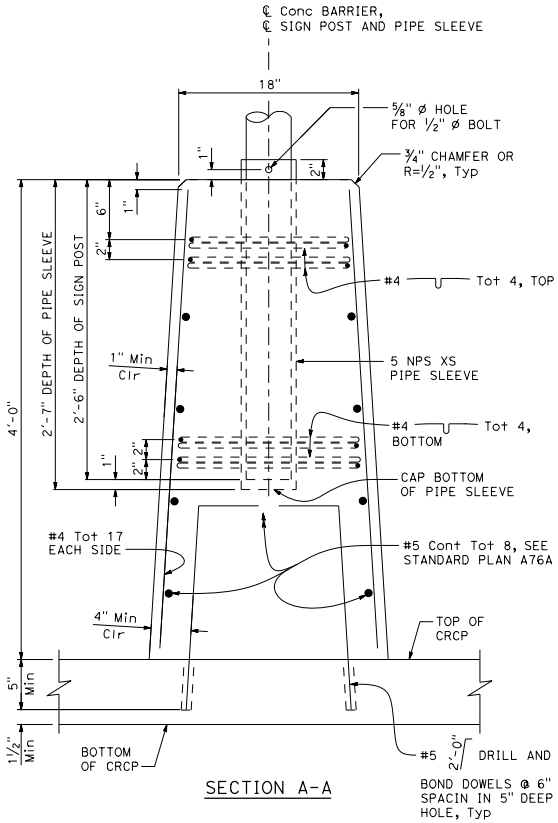

SECTION A-A

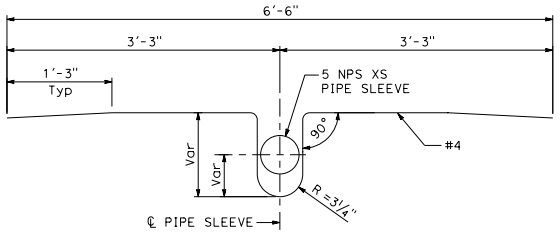

DETAIL A

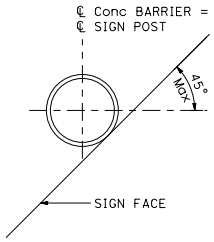

DETAIL B

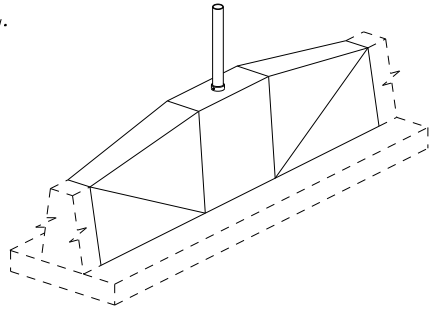

ISOMETRIC VIEW

STATE OF CALIFORNIA
DEPARTMENT OF TRANSPORTATION

CONCRETE BARRIER TYPE 60AP

NO SCALE

A76BC

2026 STANDARD PLAN A76BC

7-1-26

Return to Table of Contents

Dist	COUNTY	ROUTE	POST MILES TOTAL PROJECT	SHEET No.	TOTAL SHEETS

REGISTERED CIVIL ENGINEER

September 18, 2026

PLANS APPROVAL DATE

REGISTERED PROFESSIONAL ENGINEER Mahesh Shrestha No. C80133 Exp. 9-30-26 CIVIL STATE OF CALIFORNIA

THE STATE OF CALIFORNIA OR ITS OFFICERS OR AGENTS SHALL NOT BE RESPONSIBLE FOR THE ACCURACY OR COMPLETENESS OF SCANNED COPIES OF THIS PLAN SHEET.

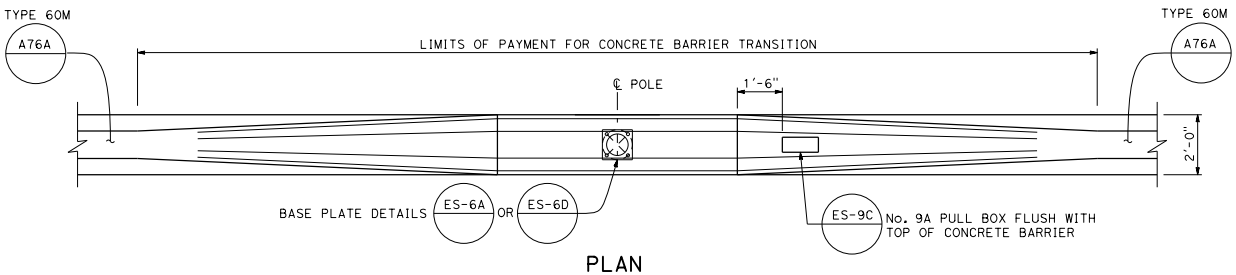

PLAN

Note: Reinforcement not shown for clarity.

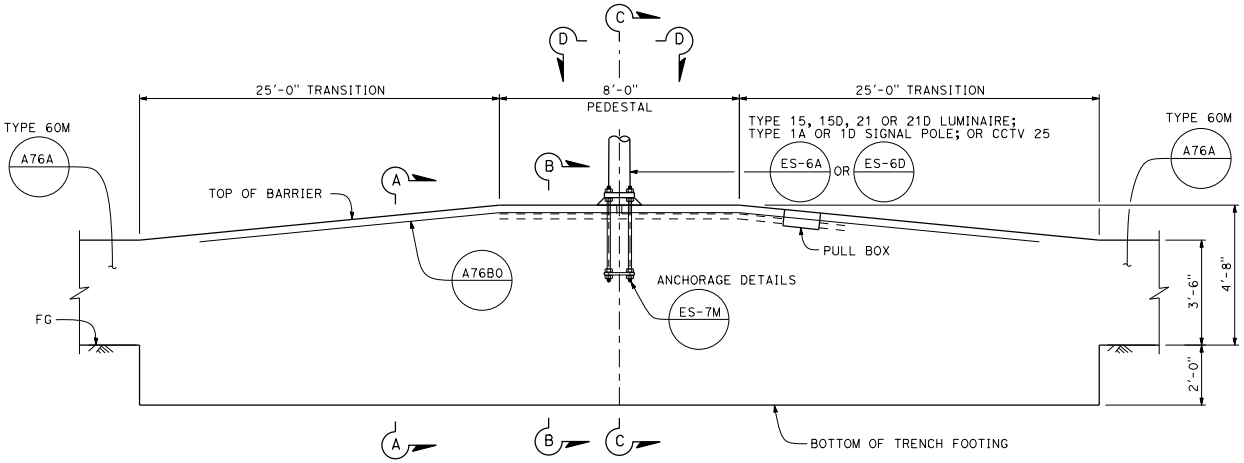

ELEVATION

Note: Reinforcement not shown for clarity.

GENERAL NOTES:

SPECIFICATIONS

Design: AASHTO Standard Specifications for Structural Supports for Highway Signs, Luminaires and Traffic Signals, 6th Edition, 2013 with Interim Updates through 2019. (1)

AASHTO LRFD Bridge Design Specifications 2017 8th Edition with California Amendments. (2)

LOADING

Wind Loading: 100 mph (3-second gust) (1)

Vehicular Collision Force: 54 kips (2)

UNIT STRESSES

Reinforced Concrete: f'c = 3,600 psi
fy = 60,000 psi

NOTES:

1. For Section A-A, Section B-B, Section C-C, and Section D-D, see Standard Plan A76B0.
2. For pole locations, see Electrical Plans.

STANDARD PLAN SHEET No.

DETAIL No.

STATE OF CALIFORNIA
DEPARTMENT OF TRANSPORTATION

CONCRETE BARRIER TYPE 60M WITH SMALL POLE

NO SCALE

A76BM

2026 STANDARD PLAN A76BM

7-1-26

Return to Table of Contents

Dist	COUNTY	ROUTE	POST MILES TOTAL PROJECT	SHEET No.	TOTAL SHEETS

REGISTERED CIVIL ENGINEER

September 18, 2026

PLANS APPROVAL DATE

REGISTERED PROFESSIONAL ENGINEER Mahesh Shrestha No. C80133 Exp. 9-30-26 CIVIL STATE OF CALIFORNIA

THE STATE OF CALIFORNIA OR ITS OFFICERS OR AGENTS SHALL NOT BE RESPONSIBLE FOR THE ACCURACY OR COMPLETENESS OF SCANNED COPIES OF THIS PLAN SHEET.

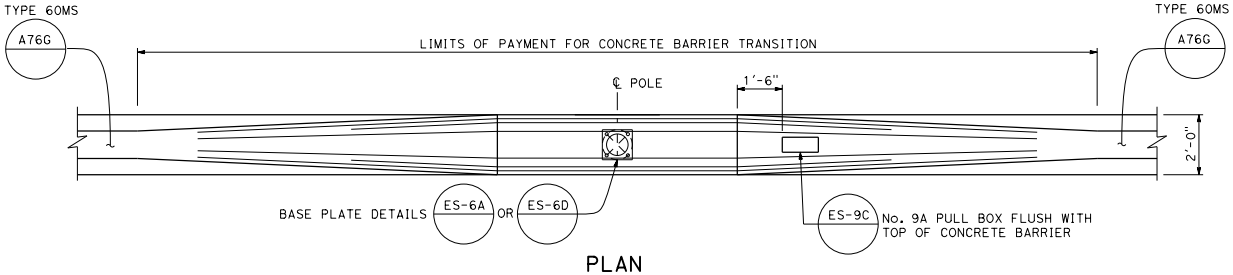

PLAN

Note: Reinforcement not shown for clarity.

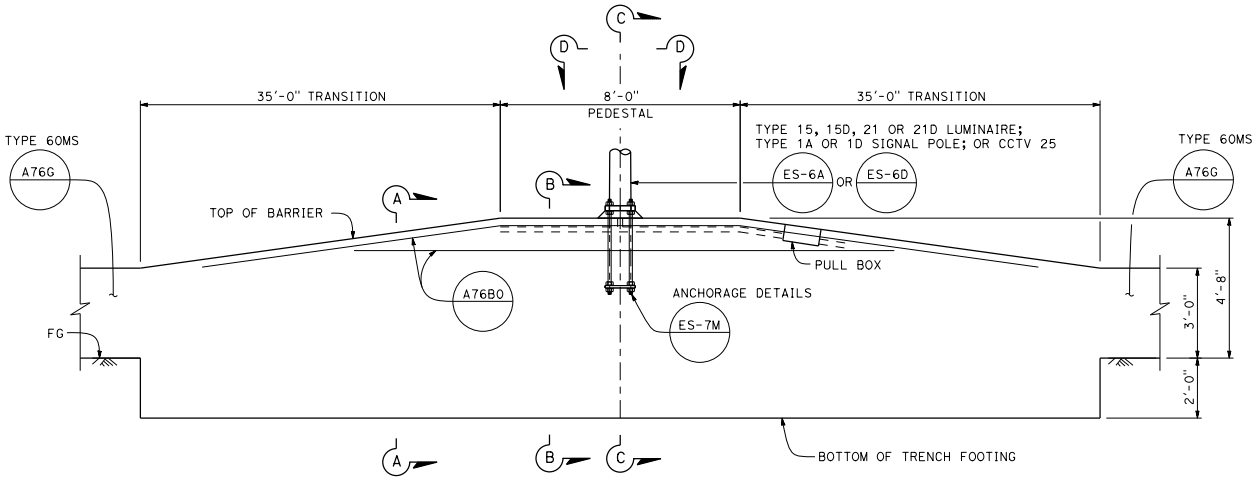

ELEVATION

Note: Reinforcement not shown for clarity.

GENERAL NOTES:

SPECIFICATIONS

Design: AASHTO Standard Specifications for Structural Supports for Highway Signs, Luminaires and Traffic Signals, 6th Edition, 2013 with Interim Updates through 2019. (1)

AASHTO LRFD Bridge Design Specifications 2017 8th Edition with California Amendments. (2)

LOADING

Wind Loading: 100 mph (3-second gust) (1)
Vehicular Collision Force: 54 kips (2)

UNIT STRESSES

Reinforced Concrete: f'c = 3,600 psi
fy = 60,000 psi

NOTES:

1. For Section A-A, Section B-B, Section C-C, and Section D-D, see Standard Plan A76B0.
2. For pole locations, see Electrical Plans.

STANDARD PLAN SHEET No.

DETAIL No.

STATE OF CALIFORNIA
DEPARTMENT OF TRANSPORTATION

CONCRETE BARRIER TYPE 60MS WITH SMALL POLE

NO SCALE

A76BN

2026 STANDARD PLAN A76BN

7-1-26

Return to Table of Contents

Dist	COUNTY	ROUTE	POST MILES TOTAL PROJECT	SHEET No.	TOTAL SHEETS

REGISTERED CIVIL ENGINEER

September 18, 2026

PLANS APPROVAL DATE

REGISTERED PROFESSIONAL ENGINEER Mahesh Shrestha No. C80133 Exp. 9-30-26 CIVIL STATE OF CALIFORNIA

THE STATE OF CALIFORNIA OR ITS OFFICERS OR AGENTS SHALL NOT BE RESPONSIBLE FOR THE ACCURACY OR COMPLETENESS OF SCANNED COPIES OF THIS PLAN SHEET.

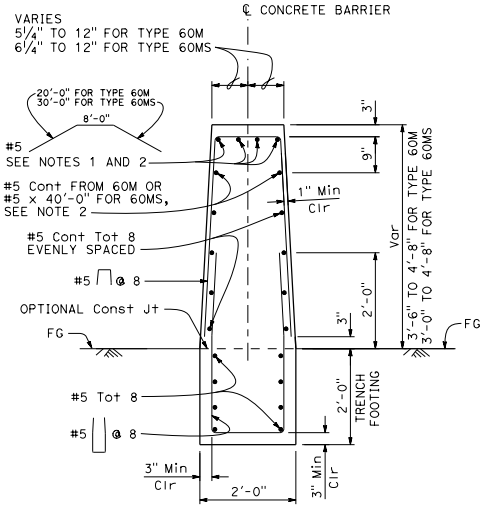

SECTION A-A

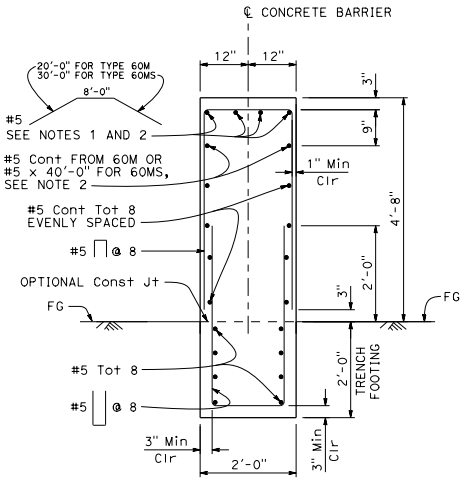

SECTION B-B

NOTES:

1. See Standard Plan A76BM, ELEVATION for Type 60M.
2. See Standard Plan A76BN, ELEVATION for Type 60MS.

STANDARD PLAN SHEET No.

DETAIL No.

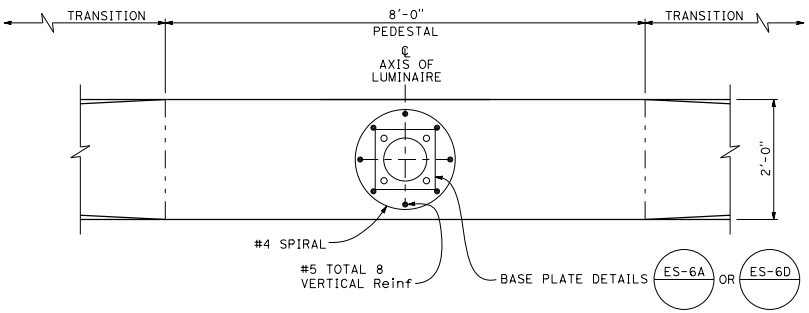

SECTION D-D

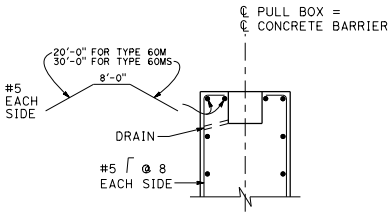

BARRIER SECTION
AT PULL BOX

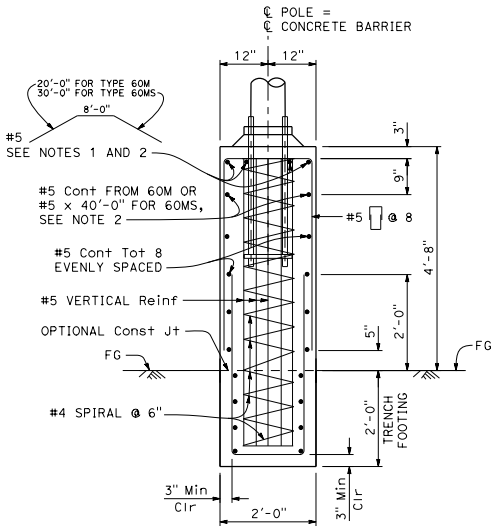

SECTION C-C

STATE OF CALIFORNIA
DEPARTMENT OF TRANSPORTATION

CONCRETE BARRIER TYPES 60M AND 60MS WITH SMALL POLE TRANSITION DETAILS

NO SCALE

A76BO

2026 STANDARD PLAN A76BO

7-1-26

Return to Table of Contents

Dist	COUNTY	ROUTE	POST MILES TOTAL PROJECT	SHEET No.	TOTAL SHEETS

REGISTERED CIVIL ENGINEER

September 18, 2026

PLANS APPROVAL DATE

REGISTERED PROFESSIONAL ENGINEER Mahesh Shrestha No. C80133 Exp. 9-30-26 CIVIL STATE OF CALIFORNIA

THE STATE OF CALIFORNIA OR ITS OFFICERS OR AGENTS SHALL NOT BE RESPONSIBLE FOR THE ACCURACY OR COMPLETENESS OF SCANNED COPIES OF THIS PLAN SHEET.

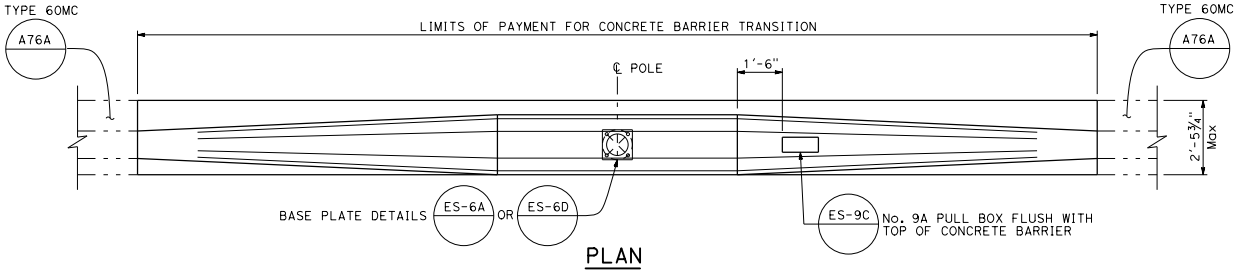

PLAN

Note: Reinforcement not shown for clarity.

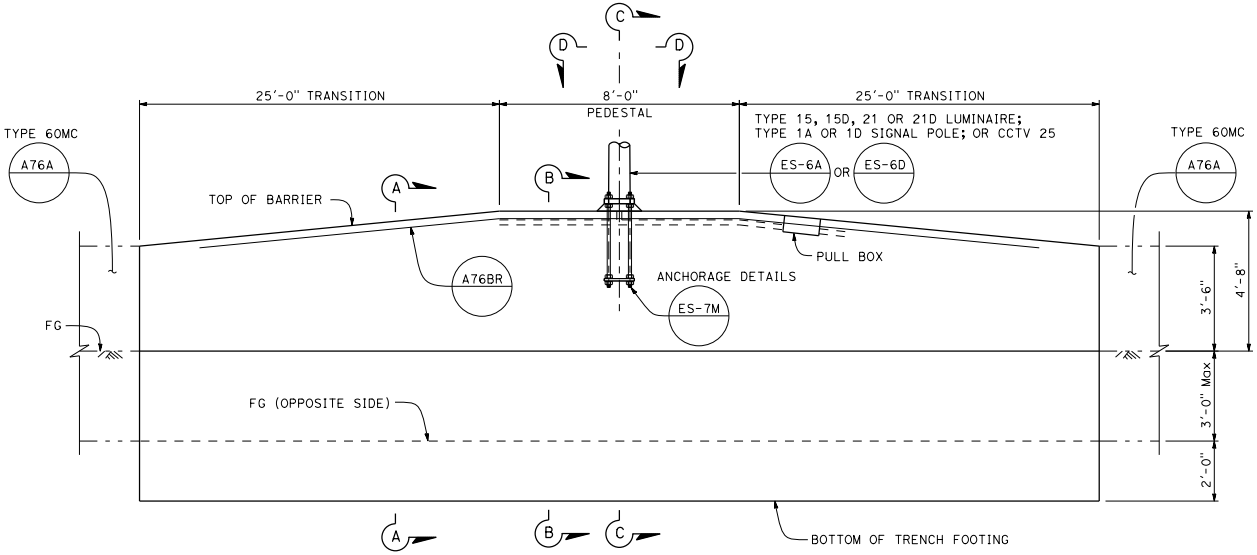

ELEVATION

Note: Reinforcement not shown for clarity.

GENERAL NOTES:

SPECIFICATIONS

Design: AASHTO Standard Specifications for Structural Supports for Highway Signs, Luminaires and Traffic Signals, 6th Edition, 2013 with Interim Updates through 2019. (1)

AASHTO LRFD Bridge Design Specifications 2017 8th Edition with California Amendments. (2)

LOADING

Wind Loading: 100 mph (3-second gust) (1)

Vehicular Collision Force: 54 kips (2)

UNIT STRESSES

Reinforced Concrete: f'c = 3,600 psi
fy = 60,000 psi

NOTES:

1. For Section A-A, Section B-B, Section C-C, and Section D-D, see Standard Plan A76BR.
2. For pole locations, see Electrical Plans.

STANDARD PLAN SHEET No.

DETAIL No.

STATE OF CALIFORNIA
DEPARTMENT OF TRANSPORTATION

CONCRETE BARRIER TYPE 60MC WITH SMALL POLE

NO SCALE

A76BP

2026 STANDARD PLAN A76BP

7-1-26

Return to Table of Contents

Dist	COUNTY	ROUTE	POST MILES TOTAL PROJECT	SHEET No.	TOTAL SHEETS

REGISTERED CIVIL ENGINEER

September 18, 2026

PLANS APPROVAL DATE

REGISTERED PROFESSIONAL ENGINEER Mahesh Shrestha No. C80133 Exp. 9-30-26 CIVIL STATE OF CALIFORNIA

THE STATE OF CALIFORNIA OR ITS OFFICERS OR AGENTS SHALL NOT BE RESPONSIBLE FOR THE ACCURACY OR COMPLETENESS OF SCANNED COPIES OF THIS PLAN SHEET.

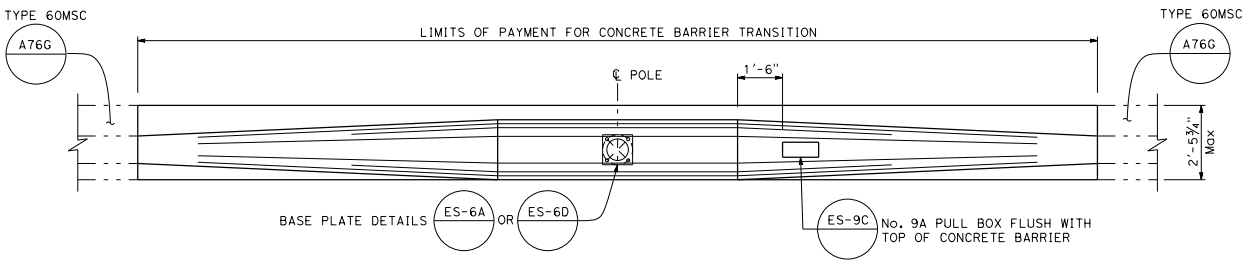

PLAN

Note: Reinforcement not shown for clarity.

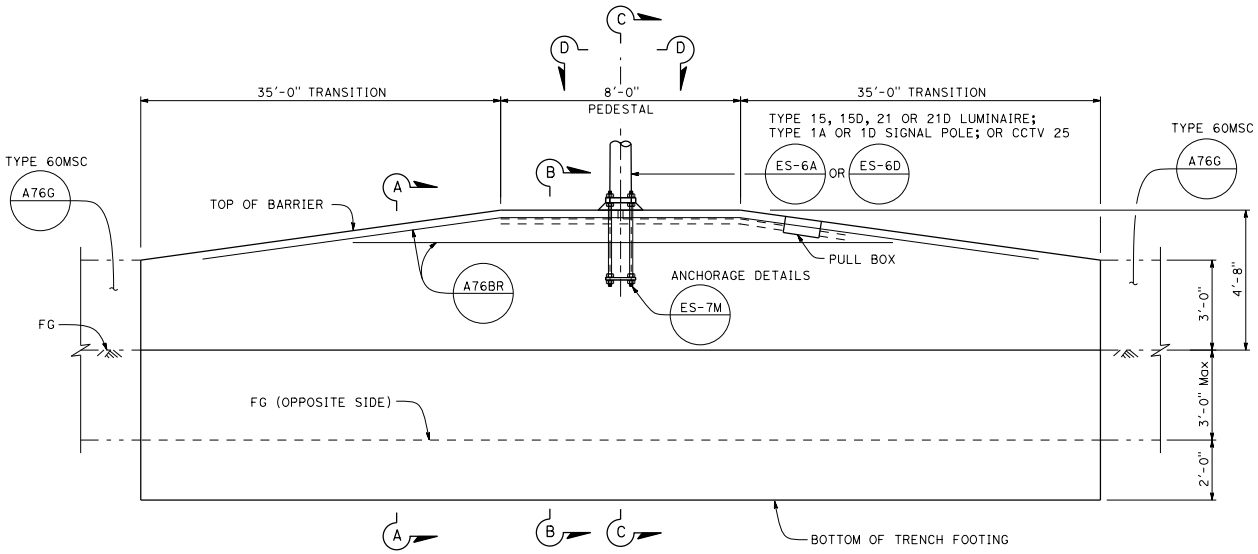

ELEVATION

Note: Reinforcement not shown for clarity.

GENERAL NOTES:

SPECIFICATIONS

Design: AASHTO Standard Specifications for Structural Supports for Highway Signs, Luminaires and Traffic Signals, 6th Edition, 2013 with Interim Updates through 2019. (1)

AASHTO LRFD Bridge Design Specifications 2017 8th Edition with California Amendments. (2)

LOADING

Wind Loading: 100 mph (3-second gust) (1)
Vehicular Collision Force: 54 kips (2)

UNIT STRESSES

Reinforced Concrete: f'c = 3,600 psi
fy = 60,000 psi

NOTES:

1. For Section A-A, Section B-B, Section C-C, and Section D-D, see Standard Plan A76BR.
2. For pole locations, see Electrical Plans.

STANDARD PLAN SHEET No.

DETAIL No.

STATE OF CALIFORNIA
DEPARTMENT OF TRANSPORTATION

CONCRETE BARRIER TYPE 60MSC WITH SMALL POLE

NO SCALE

A76BQ

2026 STANDARD PLAN A76BQ

7-1-26

Return to Table of Contents

Dist	COUNTY	ROUTE	POST MILES TOTAL PROJECT	SHEET No.	TOTAL SHEETS

REGISTERED CIVIL ENGINEER

September 18, 2026
PLANS APPROVAL DATE

REGISTERED PROFESSIONAL ENGINEER
Mahesh Shrestha
No. C80133
Exp. 9-30-26
CIVIL
STATE OF CALIFORNIA

THE STATE OF CALIFORNIA OR ITS OFFICERS OR AGENTS SHALL NOT BE RESPONSIBLE FOR THE ACCURACY OR COMPLETENESS OF SCANNED COPIES OF THIS PLAN SHEET.

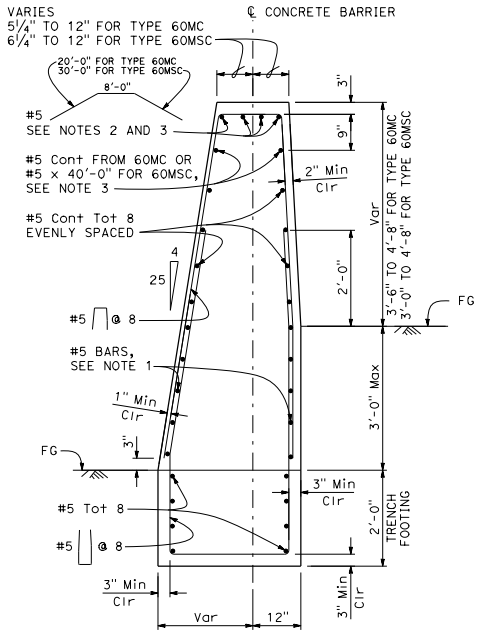

SECTION A-A

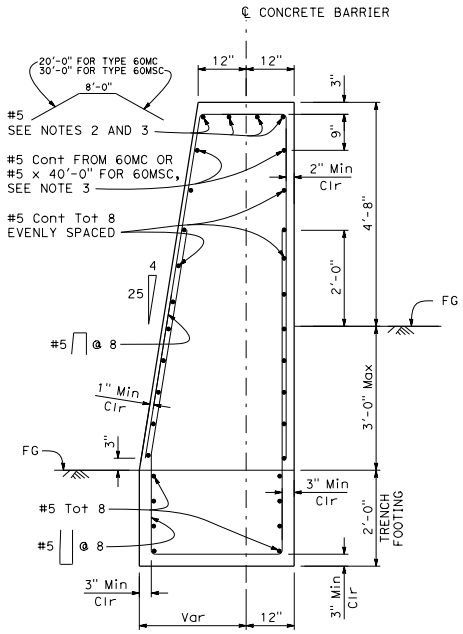

SECTION B-B

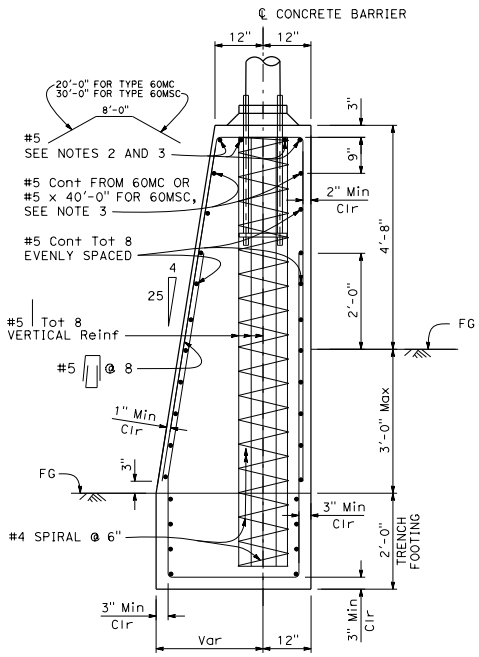

SECTION C-C

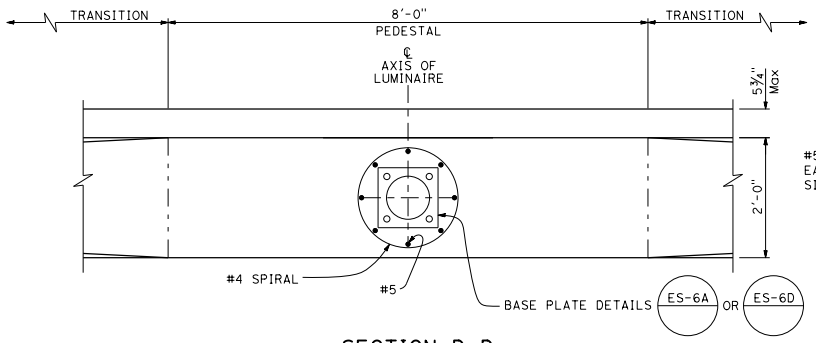

SECTION D-D

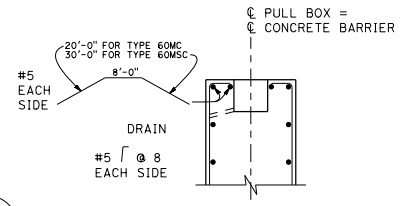

BARRIER SECTION
AT PULL BOX

NOTES:

1. For roadbed surfaces offset greater than 1½" and less than or equal to 3", no rebars required. For roadbed surfaces offset greater than 3" and less than or equal to 8", use two #5 rebars at 3" above the lower roadbed surface. For roadbed surfaces offset greater than 8" and less than or equal to 12", use two #5 rebars at 3" above the lower roadbed surface and two #5 rebars at 8" above the lower roadbed surface. For roadbed surfaces offset greater than 12" and less than or equal to 36", use two #5 rebars at 3" above the lower roadbed surface and two #5 rebars at every 8" increment vertical spacing above the first two #5 rebars.
2. See Standard Plan A76BP, ELEVATION for Type 60MC.
3. See Standard Plan A76BQ, ELEVATION for Type 60MSC.

STANDARD PLAN SHEET No.
DETAIL No.

STATE OF CALIFORNIA
DEPARTMENT OF TRANSPORTATION

CONCRETE BARRIER TYPES 60MC AND 60MSC WITH SMALL POLE TRANSITION DETAILS

NO SCALE

A76BR

2026 STANDARD PLAN A76BR

7-1-26

Return to Table of Contents

Dist	COUNTY	ROUTE	POST MILES TOTAL PROJECT	SHEET No.	TOTAL SHEETS

Jawad Naderi
REGISTERED CIVIL ENGINEER

September 18, 2026
PLANS APPROVAL DATE

REGISTERED PROFESSIONAL ENGINEER Mohammad Jawad Naderi No. C96340 Exp. 9-30-26 CIVIL STATE OF CALIFORNIA

THE STATE OF CALIFORNIA OR ITS OFFICERS OR AGENTS SHALL NOT BE RESPONSIBLE FOR THE ACCURACY OR COMPLETENESS OF SCANNED COPIES OF THIS PLAN SHEET.

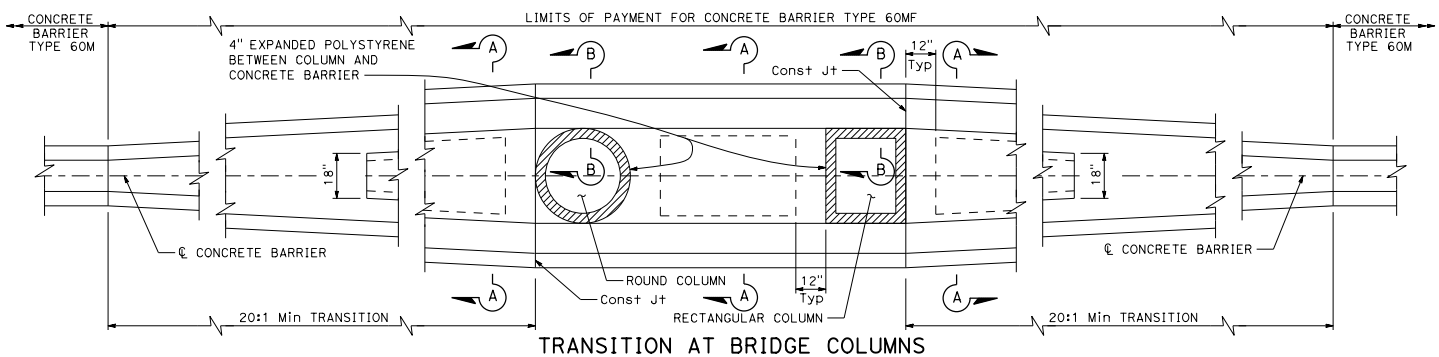

TRANSITION AT BRIDGE COLUMNS

Concrete Barrier Type 60MF, see Note 7

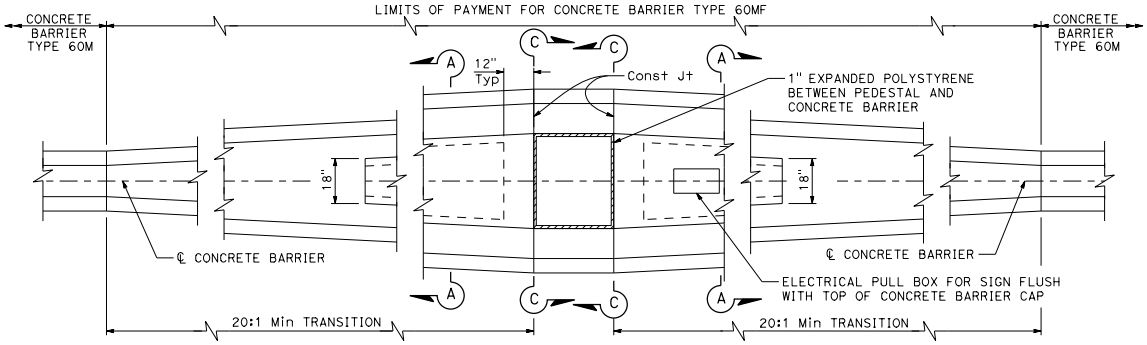

TRANSITION AT SIGN PEDESTAL

Concrete Barrier Type 60MF, see Note 7

NOTES:

1. See Standard Plan A76A for Concrete Barrier Type 60M.
2. Contractor options for fill between concrete barrier walls:
   A. Place 4" PCC at base between concrete barrier walls.
   B. Place 1'-0" of granular material at base between walls.
   C. Place granular material from base to bottom of 4" cap.
   D. Monolithic concrete with foam blockouts is not permitted.
3. Reinforcing steel shall extend continuous through construction joints.
4. See Overhead Sign plans for sign pedestal elevations on new construction.
5. Adjust height of concrete barrier wall on low side of offset or superelevated roadways to provide level grade across top of concrete barrier cap.
6. See Overhead Signs Standard Plan Pile Foundation Tables.
7. All locations with limited shoulder width available for barrier, see Standard Plan A76F for use of Concrete Barrier Type 60MGF.

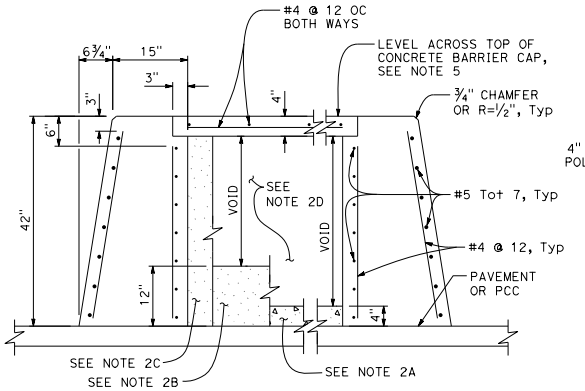

SECTION A-A

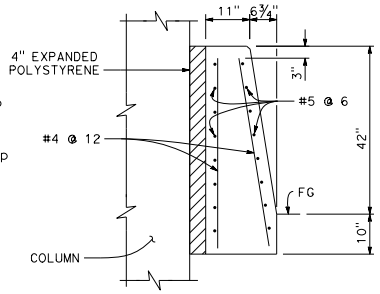

SECTION B-B

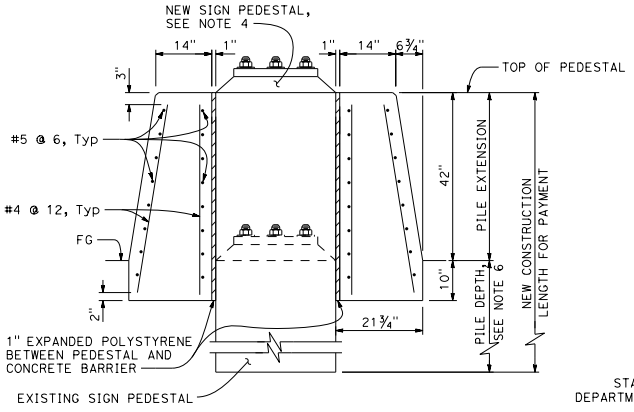

SECTION C-C

STATE OF CALIFORNIA
DEPARTMENT OF TRANSPORTATION

CONCRETE BARRIER TYPE 60MF

NO SCALE

A76C

2026 STANDARD PLAN A76C

7-1-26

Return to Table of Contents

Dist	COUNTY	ROUTE	POST MILES TOTAL PROJECT	SHEET No.	TOTAL SHEETS

Jawad Naderi
REGISTERED CIVIL ENGINEER

September 18, 2026
PLANS APPROVAL DATE

REGISTERED PROFESSIONAL ENGINEER
Mohammad Jawad Naderi
No. C96340
Exp. 9-30-26
CIVIL
STATE OF CALIFORNIA

THE STATE OF CALIFORNIA OR ITS OFFICERS OR AGENTS SHALL NOT BE RESPONSIBLE FOR THE ACCURACY OR COMPLETENESS OF SCANNED COPIES OF THIS PLAN SHEET.

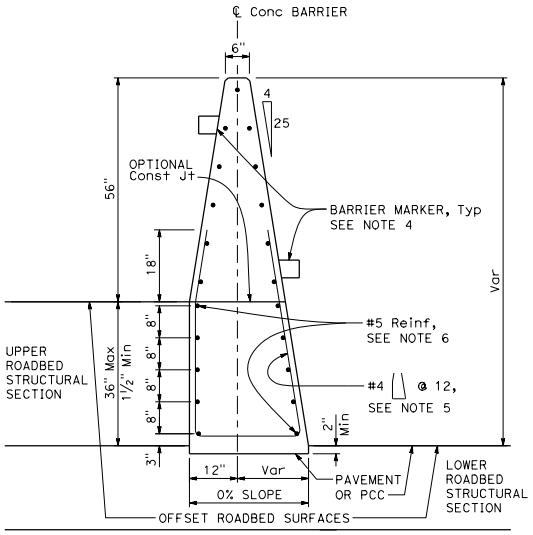

CONCRETE BARRIER TYPE 60MGC

Details similar to Concrete Barrier Type 60MG except as noted.
36" roadbed surfaces offset shown.

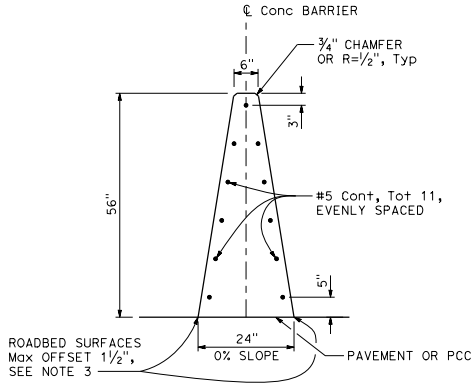

CONCRETE BARRIER TYPE 60MG

(Monolithic concrete glare screen/barrier)

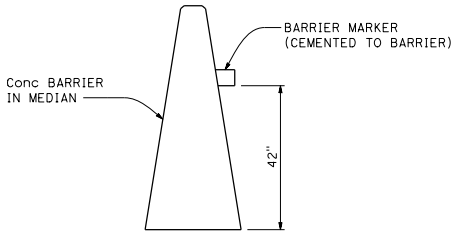

CONCRETE BARRIER TYPE 60MG DELINEATION

See Note 4

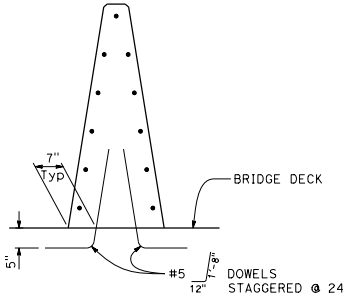

CONCRETE BARRIER TYPE 60MGA

Details similar to Type 60MG except as noted.

NOTES:

1. See Standard Plan A76E for details of Concrete Barrier Type 60MG end anchors, connection to structures and transitions to Concrete Barrier Type 60M.
2. See Standard Plan A76F for Concrete Barrier Type 60MG transitions at bridge column and sign pedestals.
3. Where roadbed offset is greater than 1½", see Concrete Barrier Type 60MGC.
4. Barrier marker to be used when required by the Special Provisions. Bottom of barrier marker to be placed 42" above the roadway.
5. Reinforcing stirrup not required for offsets less than 1'-0".
6. For roadbed surfaces offset greater than 1½" and less than or equal to 3", no additional reinforcement required. For roadbed surfaces offset greater than 3" and less than or equal to 36", use two #5 Reinf at 3" above the lower roadbed surface and two #5 Reinf at every 8" increment vertical spacing above the first two #5 Reinf.
7. Minimum length for Concrete Barrier Type 60 series is 100'-0".

STATE OF CALIFORNIA
DEPARTMENT OF TRANSPORTATION

CONCRETE BARRIER TYPE 60MG

NO SCALE

A76D

2026 STANDARD PLAN A76D

7-1-26

Return to Table of Contents

Dist	COUNTY	ROUTE	POST MILES TOTAL PROJECT	SHEET No.	TOTAL SHEETS

Jawad Naderi
REGISTERED CIVIL ENGINEER

September 18, 2026
PLANS APPROVAL DATE

REGISTERED PROFESSIONAL ENGINEER
Mohammad Jawad Naderi
No. C96340
Exp. 9-30-26
CIVIL
STATE OF CALIFORNIA

THE STATE OF CALIFORNIA OR ITS OFFICERS OR AGENTS SHALL NOT BE RESPONSIBLE FOR THE ACCURACY OR COMPLETENESS OF SCANNED COPIES OF THIS PLAN SHEET.

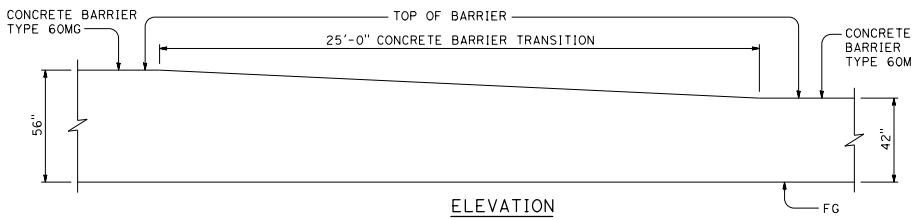

ELEVATION

TRANSITION CONCRETE BARRIER TYPE 60MG TO CONCRETE BARRIER TYPE 60M

See Note 7

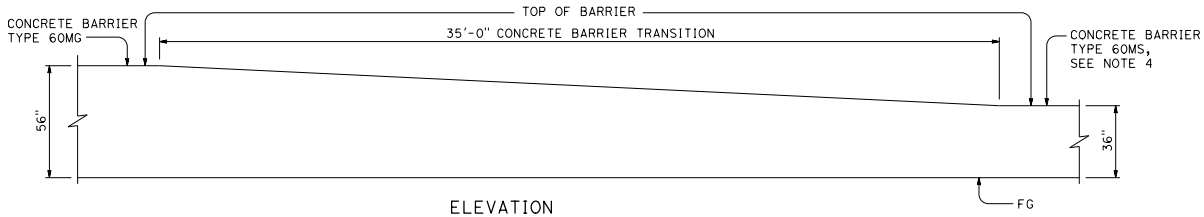

ELEVATION

TRANSITION CONCRETE BARRIER TYPE 60MG TO CONCRETE BARRIER TYPE 60MS

See Note 8

NOTES:

1. See Standard Plan A76D for Concrete Barrier Type 60MG and Type 60MGA.
2. Footing monolithic with barrier or Drill and Bond #6 dowel staggered as shown on Detail A and Detail B throughout 10'-0" length of footing. The footing is required at concrete barrier ends, midspan footings, and at interruptions in concrete barrier.
3. 10" concrete barrier footing extends 10'-0" back from structure.
4. See Standard Plan A76H for transition to crash cushion.
5. See Standard Plan A76AC for transition to existing Type 50 barrier.
6. Top of barrier elevation change should be no less than 20:1 for change of concrete barrier types.
7. Drop top #5 horizontal reinforcement bar of Concrete Barrier Type 60MG at final height of 42".
8. Drop top #5 horizontal reinforcement bar of Concrete Barrier Type 60MG halfway through transition and drop second row of horizontal reinforcement at end of transition.

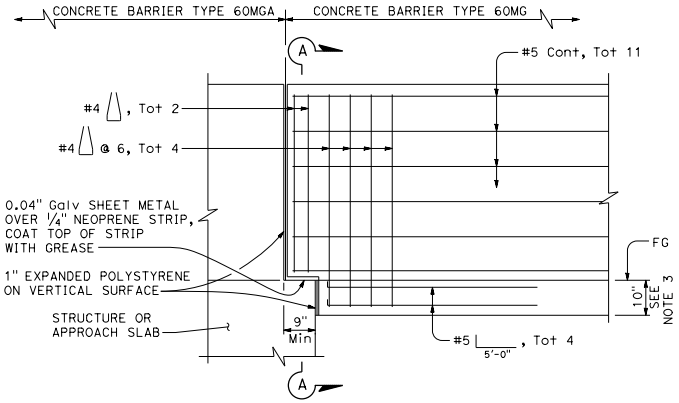

CONCRETE BARRIER TYPE 60MG CONNECTION TO STRUCTURE

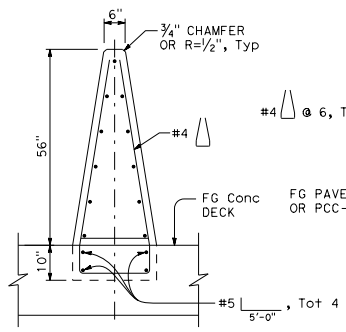

SECTION A-A

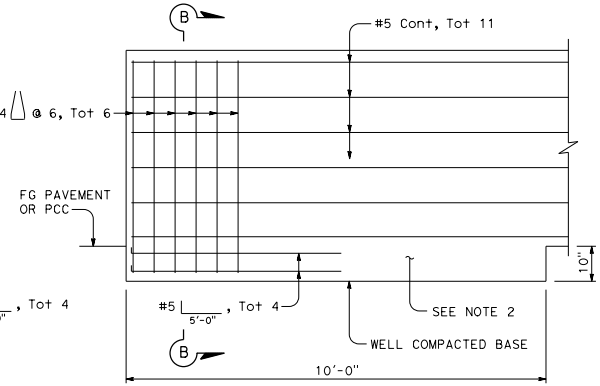

CONCRETE BARRIER TYPE 60MG END ANCHORAGE

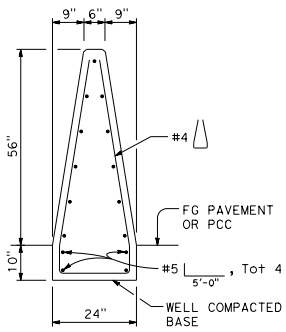

SECTION B-B

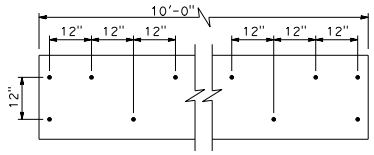

DETAIL A

Drill and Bond #6 dowel 6" deep and extend 16" into Concrete Barrier Type 60M

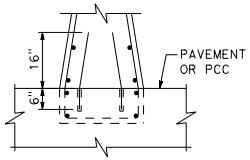

DETAIL B

Drill and Bond to existing PCC, see Note 2

STATE OF CALIFORNIA
DEPARTMENT OF TRANSPORTATION

CONCRETE BARRIER TYPE 60MG

NO SCALE

A76E

2026 STANDARD PLAN A76E

7-1-26

Return to Table of Contents

Dist	COUNTY	ROUTE	POST MILES TOTAL PROJECT	SHEET No.	TOTAL SHEETS

Jawad Naderi
REGISTERED CIVIL ENGINEER

September 18, 2026
PLANS APPROVAL DATE

REGISTERED PROFESSIONAL ENGINEER Mohammad Jawad Naderi No. C96340 Exp. 9-30-26 CIVIL STATE OF CALIFORNIA

THE STATE OF CALIFORNIA OR ITS OFFICERS OR AGENTS SHALL NOT BE RESPONSIBLE FOR THE ACCURACY OR COMPLETENESS OF SCANNED COPIES OF THIS PLAN SHEET.

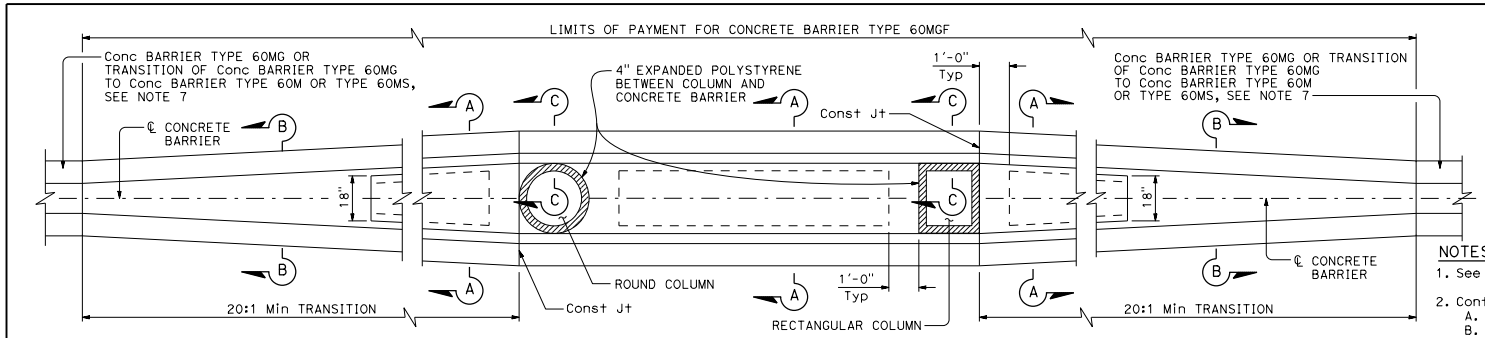

TRANSITION AT BRIDGE COLUMNS

Concrete Barrier Type 60MGF

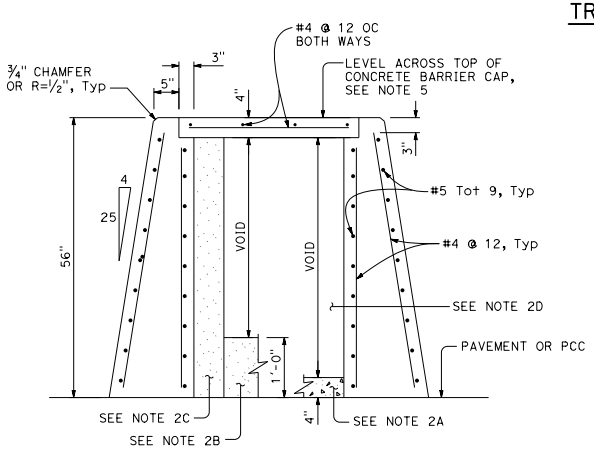

SECTION A-A

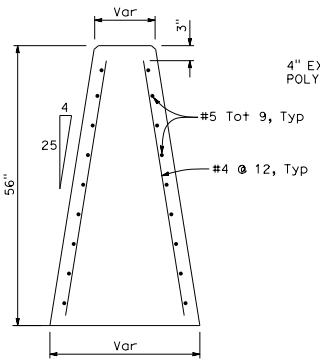

SECTION B-B

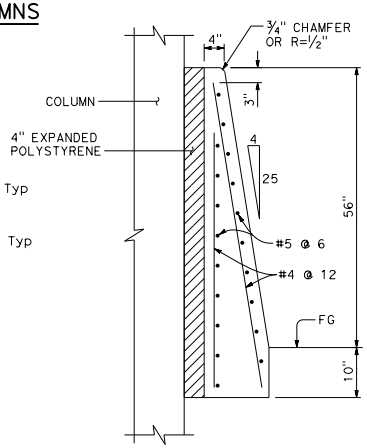

SECTION C-C

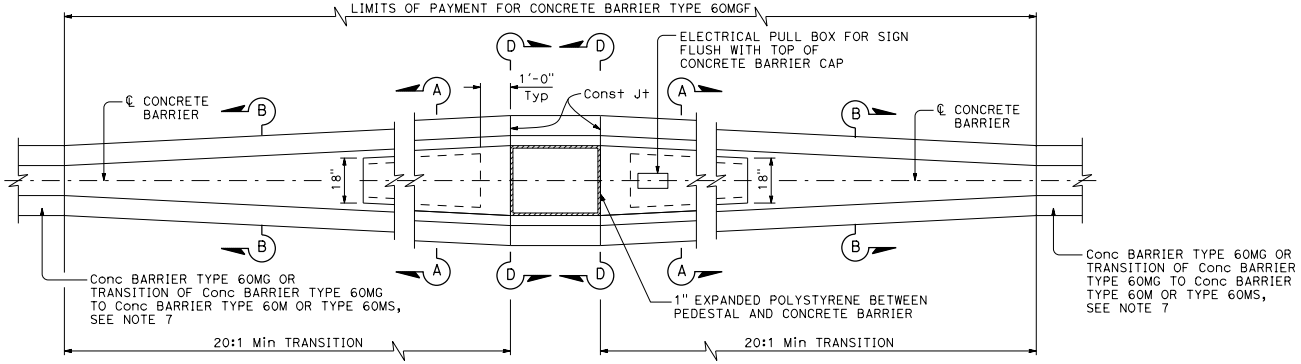

TRANSITION AT SIGN PEDESTAL

Concrete Barrier Type 60MGF

NOTES:

1. See Standard Plan A76D for Concrete Barrier Type 60MG.
2. Contractor options for fill between concrete barrier walls:
   A. Place 4" PCC at base between concrete barrier walls.
   B. Place 1'-0" of granular material at base between walls.
   C. Place granular material from base to bottom of 4" cap.
   D. Monolithic concrete with foam blockouts is not permitted.
3. Reinforcing steel shall extend continuous through construction joints.
4. See Overhead Sign plans for sign pedestal elevations on new construction.
5. Adjust height of concrete barrier wall on low side of offset or superelevated roadways to provide level grade across top of concrete barrier cap.
6. See Overhead Signs Standard Plan Pile Foundation Tables.
7. See Standard Plan A76E for concrete barrier transitions.

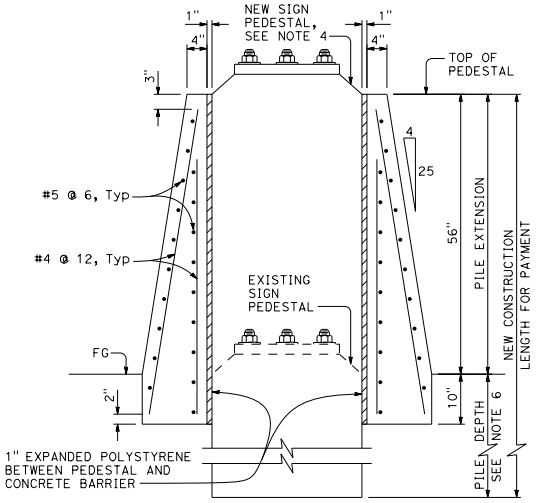

SECTION D-D

STATE OF CALIFORNIA
DEPARTMENT OF TRANSPORTATION

CONCRETE BARRIER TYPE 60MGF

NO SCALE

A76F

2026 STANDARD PLAN A76F

7-1-26

Return to Table of Contents

Dist	COUNTY	ROUTE	POST MILES TOTAL PROJECT	SHEET No.	TOTAL SHEETS

Jawad Naderi
REGISTERED CIVIL ENGINEER

September 18, 2026
PLANS APPROVAL DATE

REGISTERED PROFESSIONAL ENGINEER
Mohammad Jawad Naderi
No. C96340
Exp. 9-30-26
CIVIL
STATE OF CALIFORNIA

THE STATE OF CALIFORNIA OR ITS OFFICERS OR AGENTS SHALL NOT BE RESPONSIBLE FOR THE ACCURACY OR COMPLETENESS OF SCANNED COPIES OF THIS PLAN SHEET.

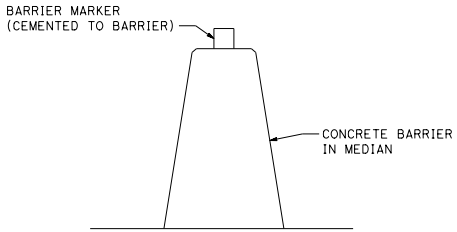

CONCRETE BARRIER TYPE 60MS DELINEATION

See Note 5

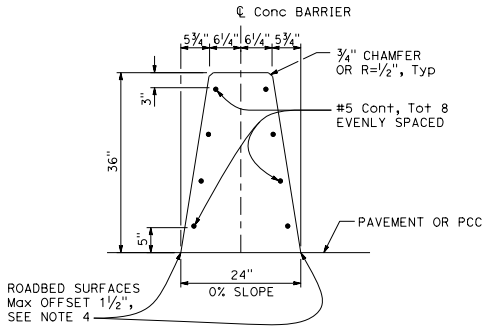

CONCRETE BARRIER TYPE 60MS

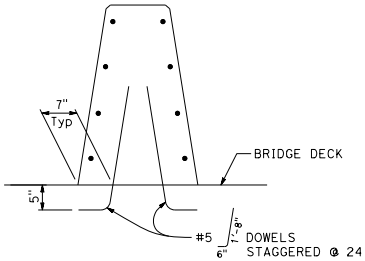

CONCRETE BARRIER TYPE 60MSA

Details similar to Type 60MS except as noted.

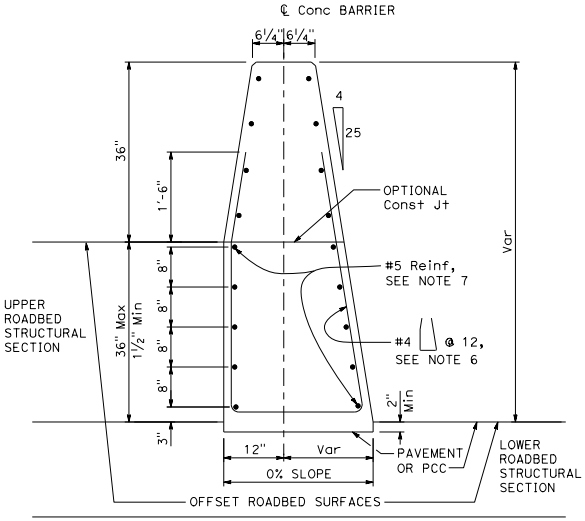

CONCRETE BARRIER TYPE 60MSC

Details similar to Type 60MS except as noted.
Use concrete barrier end anchor when necessary.
36" roadbed surfaces offset shown.

NOTES:

1. See Standard Plans A76HA and A76HB for details of Concrete Barrier Type 60MS end anchors, connection to structures and transitions to Concrete Barrier Type 50.
2. See Standard Plan A76I for Concrete Barrier Type 60MS transitions at bridge column and sign pedestals.
3. Where glare screen is required on top of concrete barrier, use Concrete Barrier Type 60MG.
4. Where roadbed offset is greater than 1½", see Concrete Barrier Type 60MSC.
5. Barrier delineation to be used when required by the Special Provisions.
6. Reinforcing stirrup not required for roadbed offsets less than 1'-0".
7. For roadbed surfaces offset greater than 1½" and less than or equal to 3", no reinforcement required. For roadbed surfaces offset greater than 3" and less than or equal to 36", use two #5 reinforcement at 3" above the lower roadbed surface and two #5 reinforcement at every 8" increment vertical spacing above the first two #5 reinforcement.

STATE OF CALIFORNIA
DEPARTMENT OF TRANSPORTATION

CONCRETE BARRIER TYPE 60MS

NO SCALE

A76G

2026 STANDARD PLAN A76G

7-1-26

Return to Table of Contents

Dist	COUNTY	ROUTE	POST MILES TOTAL PROJECT	SHEET No.	TOTAL SHEETS

Jawad Naderi
REGISTERED CIVIL ENGINEER

September 18, 2026
PLANS APPROVAL DATE

REGISTERED PROFESSIONAL ENGINEER Mohammad Jawad Naderi No. C96340 Exp. 9-30-26 CIVIL STATE OF CALIFORNIA

THE STATE OF CALIFORNIA OR ITS OFFICERS OR AGENTS SHALL NOT BE RESPONSIBLE FOR THE ACCURACY OR COMPLETENESS OF SCANNED COPIES OF THIS PLAN SHEET.

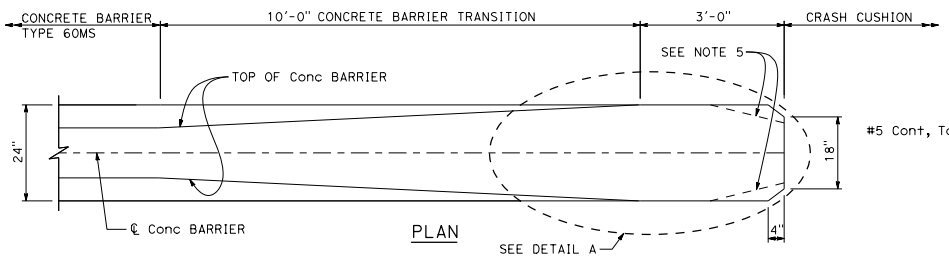

PLAN

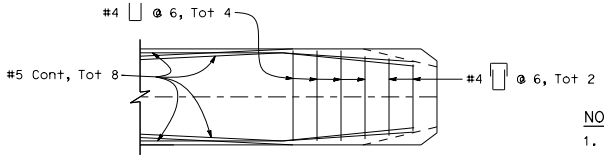

DETAIL A

TRANSITION CONCRETE BARRIER TYPE 60MS TO CRASH CUSHION

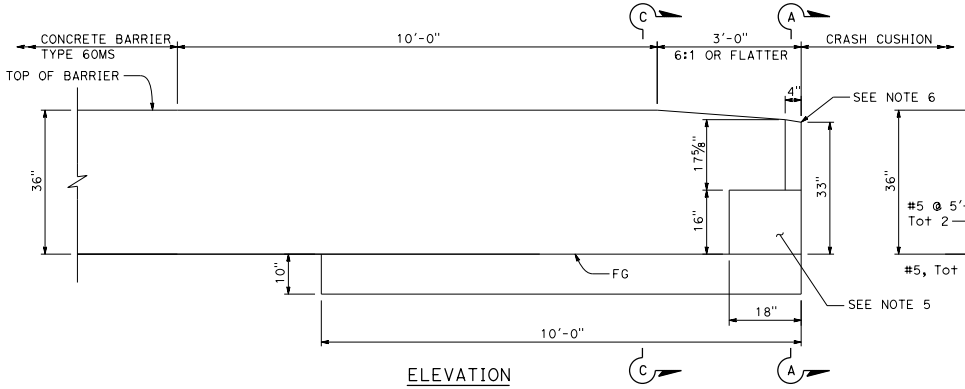

ELEVATION

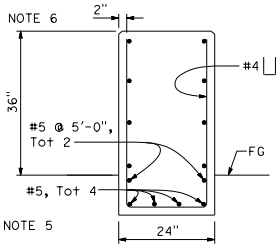

SECTION C-C

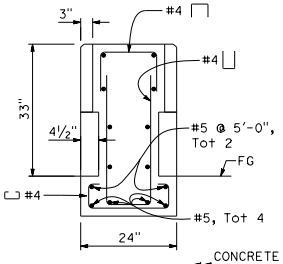

SECTION A-A

TRANSITION CONCRETE BARRIER TYPE 60MS TO CRASH CUSHION

NOTES:

1. See Standard Plan A76G for Concrete Barrier Type 60MS and Type 60MSA.
2. Footing monolithic or doweled with #6 as shown on Standard Plan A76AB. The footing is required at concrete barrier ends and at interruptions in concrete barrier. 10" concrete barrier footing extends 10'-0" back from end of barrier.
3. 10'-0" transition of concrete barrier from sloped face to vertical occurs before 3' length of vertical face for crash cushion connection and can occur within height transition for other types of concrete barrier to crash cushion connection.
4. Alternative top of barrier vertical transition may taper at maximum 6:1.
5. Lower chamfer size is 16" x 18" and 4½" deep.
6. Upper chamfer is 17⅝" x 4" and 3" deep.
7. Not for use for sand barrel crash cushions.
8. Minimum length for Concrete Barrier Type 60 series is 100'-0".

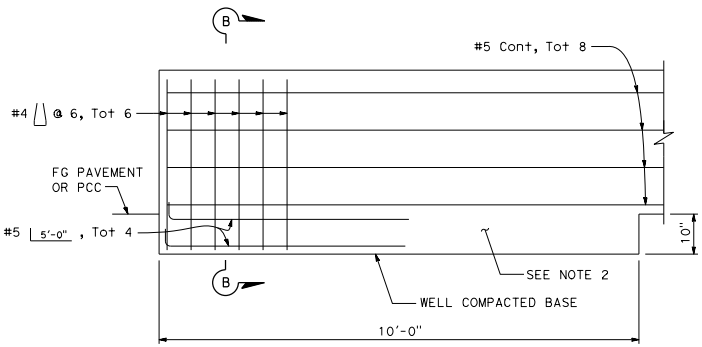

CONCRETE BARRIER TYPE 60MS END ANCHORAGE

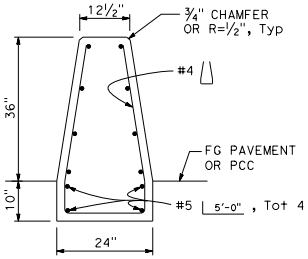

SECTION B-B

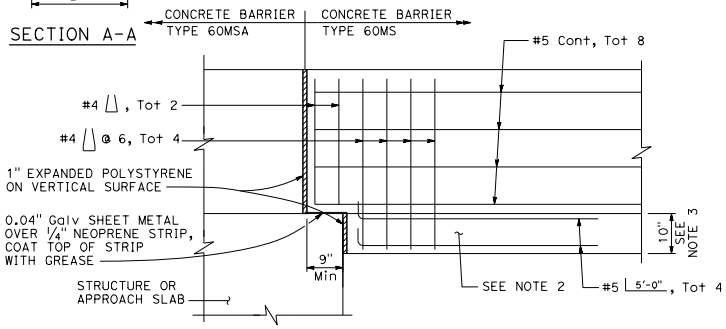

CONCRETE BARRIER TYPE 60MS CONNECTION TO STRUCTURE

STATE OF CALIFORNIA
DEPARTMENT OF TRANSPORTATION

CONCRETE BARRIER TYPE 60MS CONNECTION TO CRASH CUSHION

NO SCALE

A76HA

2026 STANDARD PLAN A76HA

7-1-26

Return to Table of Contents

Dist	COUNTY	ROUTE	POST MILES TOTAL PROJECT	SHEET No.	TOTAL SHEETS

Jawad Naderi
REGISTERED CIVIL ENGINEER

September 18, 2026
PLANS APPROVAL DATE

REGISTERED PROFESSIONAL ENGINEER
Mohammad Jawad Naderi
No. C96340
Exp. 9-30-26
CIVIL
STATE OF CALIFORNIA

THE STATE OF CALIFORNIA OR ITS OFFICERS OR AGENTS SHALL NOT BE RESPONSIBLE FOR THE ACCURACY OR COMPLETENESS OF SCANNED COPIES OF THIS PLAN SHEET.

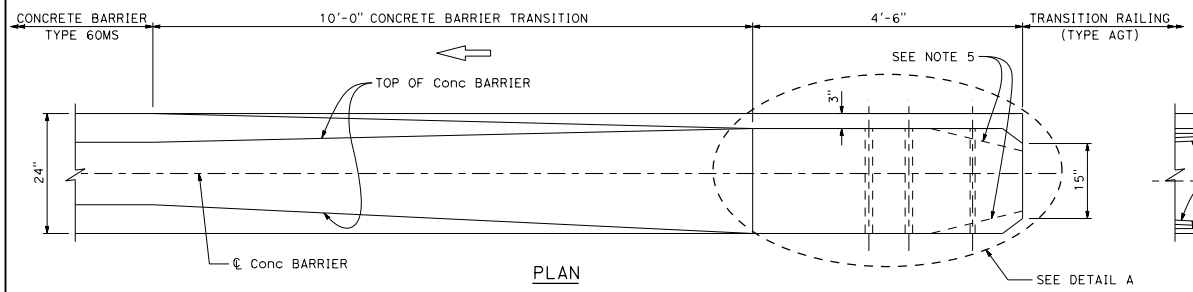

PLAN

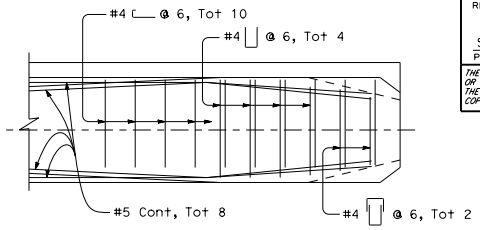

DETAIL A

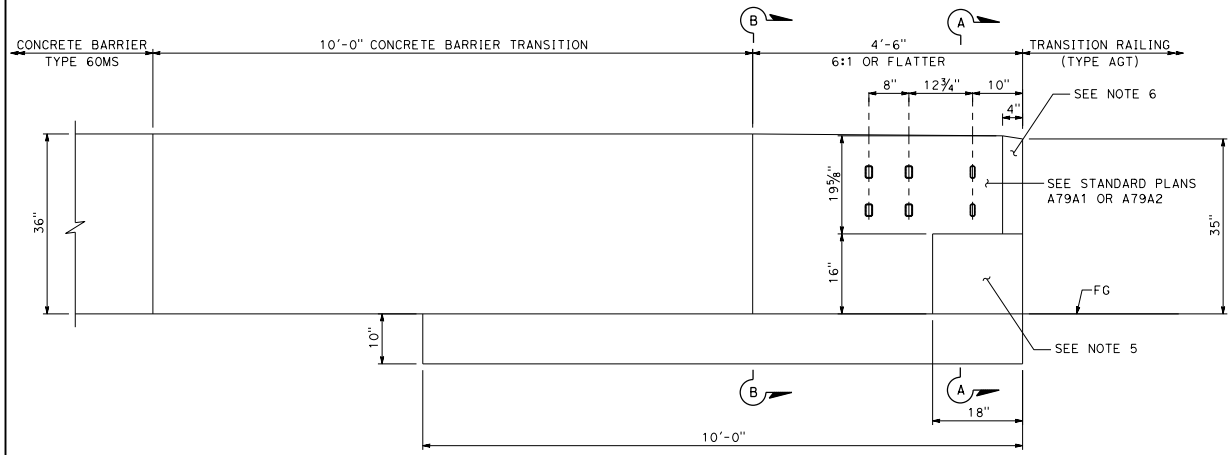

ELEVATION

TRANSITION CONCRETE BARRIER TYPE 60MS TO AGT

See Note 11

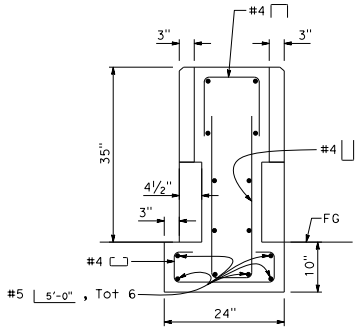

SECTION A-A

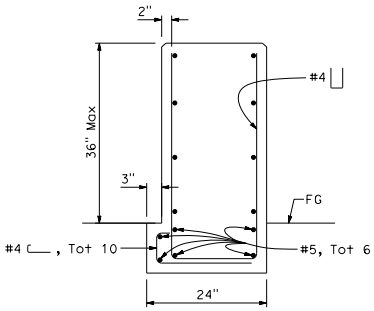

SECTION B-B

NOTES:

1. See Standard Plan A76G for concrete barrier Type 60MS.
2. Footing monolithic or doweled with 2-#8 x 8" @ 2'-0". The footing is required at concrete barrier ends and at interruptions in concrete barrier. 10" concrete barrier footing extends 10'-0" back from end of barrier.
3. 10'-0" transition of concrete barrier from sloped face to vertical occurs before 4'-6" length of vertical face for connection and can occur within height transition for other types of concrete barrier connection.
4. Alternative top of barrier vertical transition may taper at maximum 6:1.
5. Lower chamfer size is 16" x 18" and 4½" deep.
6. Upper chamfer is 19⅝" x 4" and 3" deep.
7. Typical reinforcement clearance is 2" unless shown.
8. Adjust reinforcement as needed to clear HSS by minimum 1".
9. Minimum length for concrete barrier Type 60 is 100'-0" to attach AGT.
10. 3" offset on traffic approach side.
11. See Standard Plans A79 series for AGT connection details.

STATE OF CALIFORNIA
DEPARTMENT OF TRANSPORTATION

CONCRETE BARRIER TYPE 60MS TO TRANSITION RAILING (TYPE AGT)

NO SCALE

A76HB

2026 STANDARD PLAN A76HB

7-1-26

Return to Table of Contents

Dist	COUNTY	ROUTE	POST MILES TOTAL PROJECT	SHEET No.	TOTAL SHEETS

Jawad Naderi
REGISTERED CIVIL ENGINEER

September 18, 2026
PLANS APPROVAL DATE

REGISTERED PROFESSIONAL ENGINEER
Mohammad Jawad Naderi
No. C96340
Exp. 9-30-26
CIVIL
STATE OF CALIFORNIA

THE STATE OF CALIFORNIA OR ITS OFFICERS OR AGENTS SHALL NOT BE RESPONSIBLE FOR THE ACCURACY OR COMPLETENESS OF SCANNED COPIES OF THIS PLAN SHEET.

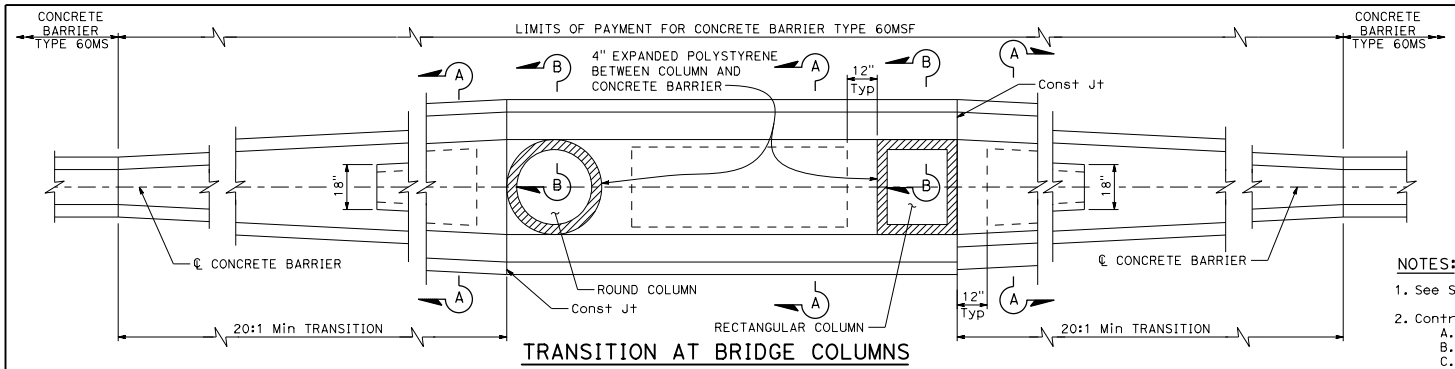

TRANSITION AT BRIDGE COLUMNS

Concrete Barrier Type 60MSF, see Note 7

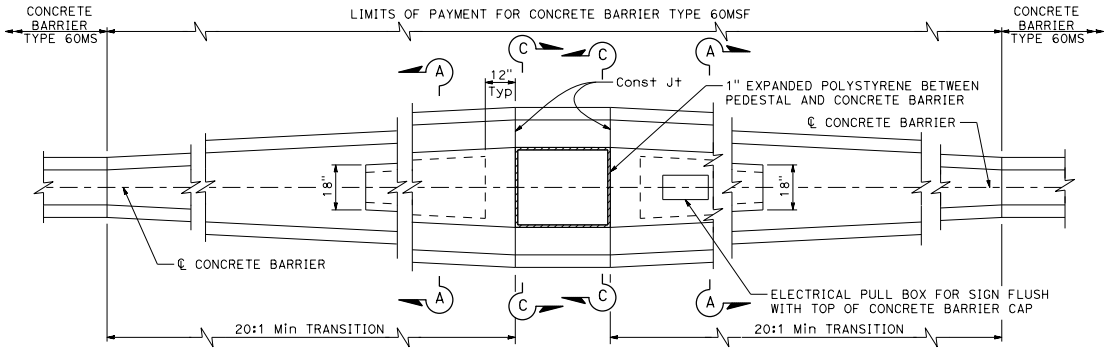

TRANSITION AT SIGN PEDESTAL

Concrete Barrier Type 60MSF, see Note 7

NOTES:

1. See Standard Plan A76G for concrete barrier Type 60MS.
2. Contractor options for fill between concrete barrier walls:
   A. Place 4" PCC at base between concrete barrier walls.
   B. Place 1'-0" of granular material at base between walls.
   C. Place granular material from base to bottom of 4" cap.
   D. Monolithic concrete with foam blockouts is not permitted.
3. Reinforcing steel shall extend continuous through construction joints.
4. See Overhead Sign plans for sign pedestal elevations on new construction.
5. Adjust height of concrete barrier wall on low side of offset or superelevated roadways to provide level grade across top of concrete barrier cap.
6. See Overhead Signs Standard Plan Pile Foundation Tables.
7. All locations with limited shoulder width available for barrier, see Standard Plan A76F for use of Concrete Barrier Type 60MGF.

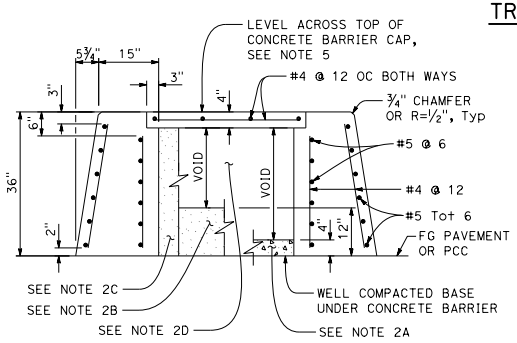

SECTION A-A

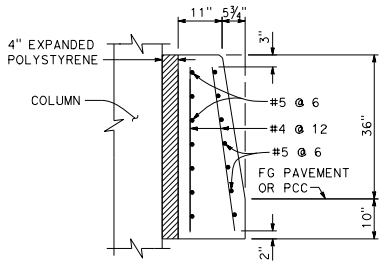

SECTION B-B

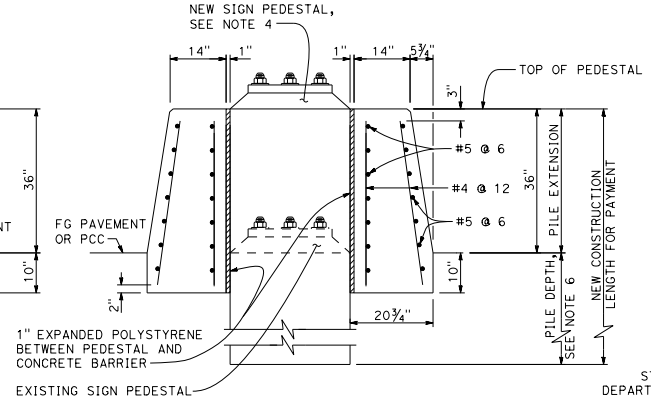

SECTION C-C

STATE OF CALIFORNIA
DEPARTMENT OF TRANSPORTATION

CONCRETE BARRIER TYPE 60MSF

NO SCALE

A76I

2026 STANDARD PLAN A76I

7-1-26

Return to Table of Contents

Dist	COUNTY	ROUTE	POST MILES TOTAL PROJECT	SHEET No.	TOTAL SHEETS

Jawad Naderi
REGISTERED CIVIL ENGINEER

September 18, 2026
PLANS APPROVAL DATE

REGISTERED PROFESSIONAL ENGINEER
Mohammad Jawad Naderi
No. C96340
Exp. 9-30-26
CIVIL
STATE OF CALIFORNIA

THE STATE OF CALIFORNIA OR ITS OFFICERS OR AGENTS SHALL NOT BE RESPONSIBLE FOR THE ACCURACY OR COMPLETENESS OF SCANNED COPIES OF THIS PLAN SHEET.

NOTES:

1. Type MS Passageway typically used for crossing of small size animals.
2. See Standard Plan A76A for typical details of Concrete Barrier Type 60M.
3. Wildlife Passageway (Type MS) should be placed a minimum of 100 feet apart.

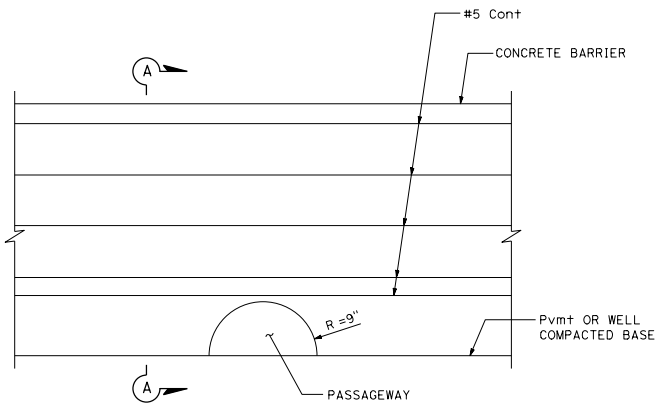

ELEVATION
See Notes 1 and 2

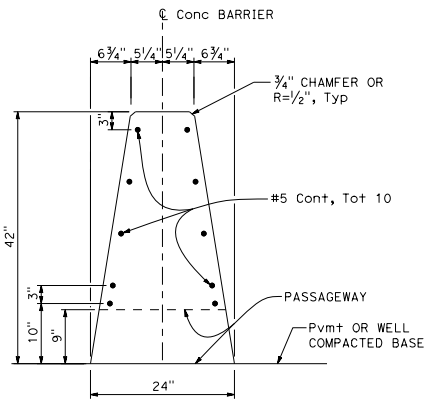

SECTION A-A
(Concrete Barrier Type 60M shown)

STATE OF CALIFORNIA
DEPARTMENT OF TRANSPORTATION

CONCRETE BARRIER WILDLIFE PASSAGEWAY (TYPE MS)

NO SCALE

A76J

7-1-26

2026 STANDARD PLAN A76J

Return to Table of Contents

Dist	COUNTY	ROUTE	POST MILES TOTAL PROJECT	SHEET No.	TOTAL SHEETS

Jawad Naderi
REGISTERED CIVIL ENGINEER

September 18, 2026
PLANS APPROVAL DATE

REGISTERED PROFESSIONAL ENGINEER Mohammad Jawad Naderi No. C96340 Exp. 9-30-26 CIVIL STATE OF CALIFORNIA

THE STATE OF CALIFORNIA OR ITS OFFICERS OR AGENTS SHALL NOT BE RESPONSIBLE FOR THE ACCURACY OR COMPLETENESS OF SCANNED COPIES OF THIS PLAN SHEET.

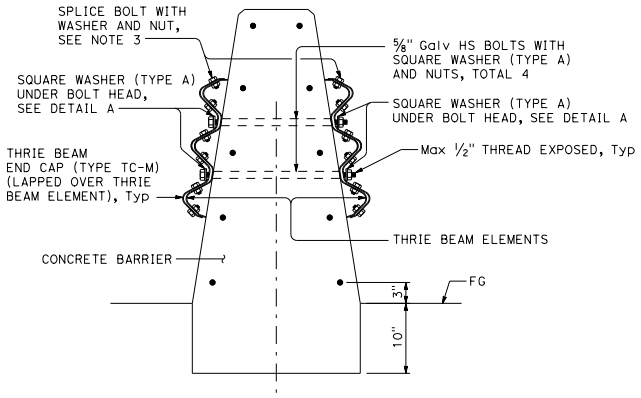

SECTION A-A

See Notes 4, 6, and 7

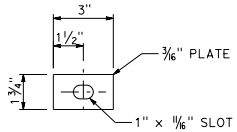

DETAIL A

SQUARE WASHER

NOTES:

1. Type MM Passageway typically used for crossing of medium size animals.
2. For details of the thrie beam element and hardware, see the A78 series of the Standard Plans. For details of concrete barrier Type 60, see the A76 series of the Standard Plans.
3. The end cap, and the thrie beam element may be connected together prior to bolting the elements to the concrete barrier. All splice bolts to connect the end cap to the rail element are required. Torque end cap to be flush with barrier surface.
4. Barrier end anchorage shall be constructed as shown in Section A-A of this plan. For footing reinforcement details, see Standard Plan A76AB.
5. Taper top of concrete barrier at 6:1 to match the top elevation of the thrie beam rail element.
6. Wildlife passageways should be placed a minimum of 100 feet apart to allow a minimum of 100 feet of concrete barrier length between openings.
7. See Standard Plan A76AB for footing reinforcement details.

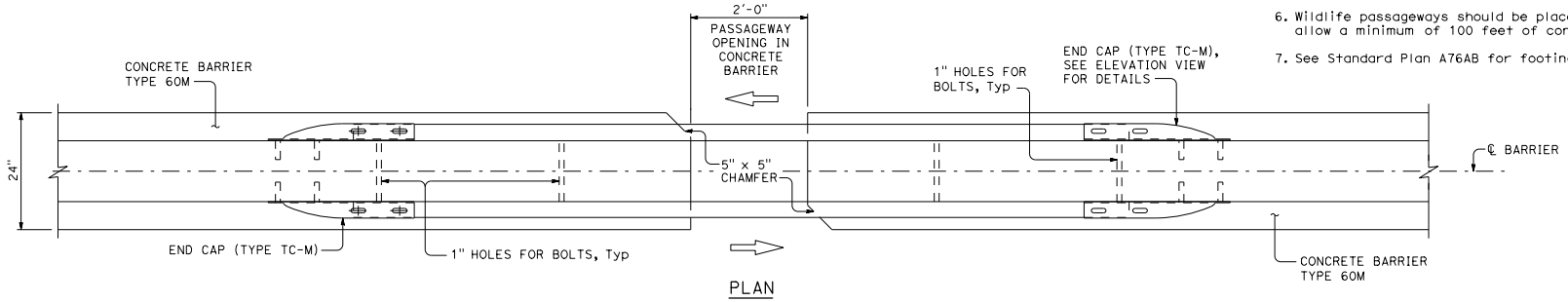

PLAN

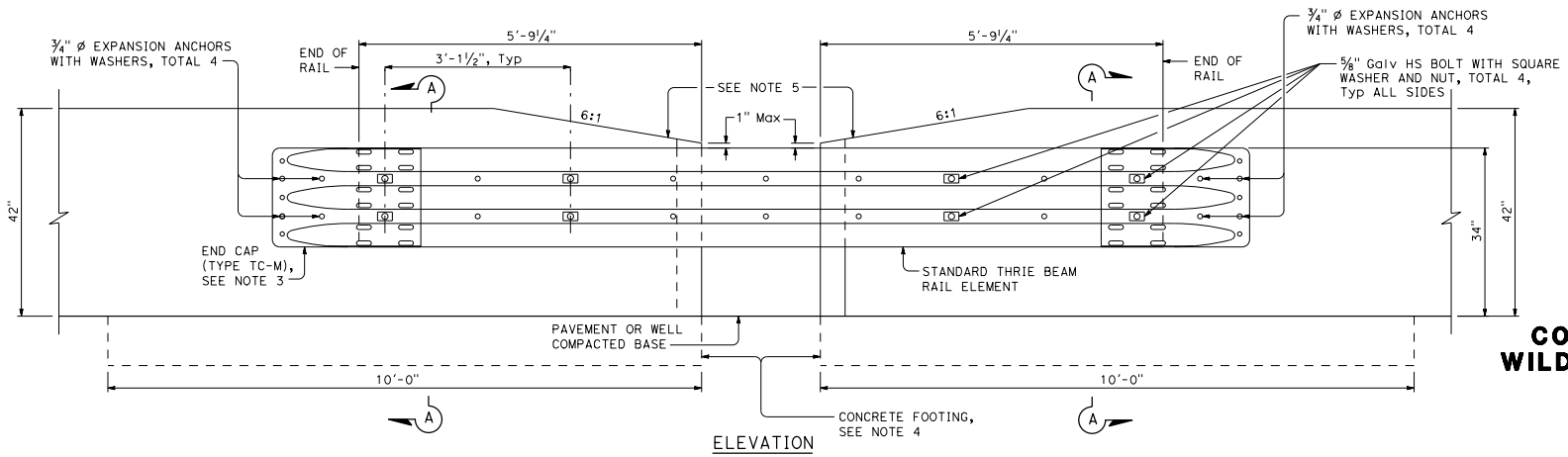

ELEVATION

STATE OF CALIFORNIA
DEPARTMENT OF TRANSPORTATION

CONCRETE BARRIER WILDLIFE PASSAGEWAY (TYPE MM)

NO SCALE

A76K

2026 STANDARD PLAN A76K

7-1-26

Return to Table of Contents

Dist	COUNTY	ROUTE	POST MILES TOTAL PROJECT	SHEET No.	TOTAL SHEETS

Jawad Naderi
REGISTERED CIVIL ENGINEER

September 18, 2026
PLANS APPROVAL DATE

REGISTERED PROFESSIONAL ENGINEER
Mohammad Jawad Naderi
No. C96340
Exp. 9-30-26
CIVIL
STATE OF CALIFORNIA

THE STATE OF CALIFORNIA OR ITS OFFICERS OR AGENTS SHALL NOT BE RESPONSIBLE FOR THE ACCURACY OR COMPLETENESS OF SCANNED COPIES OF THIS PLAN SHEET.

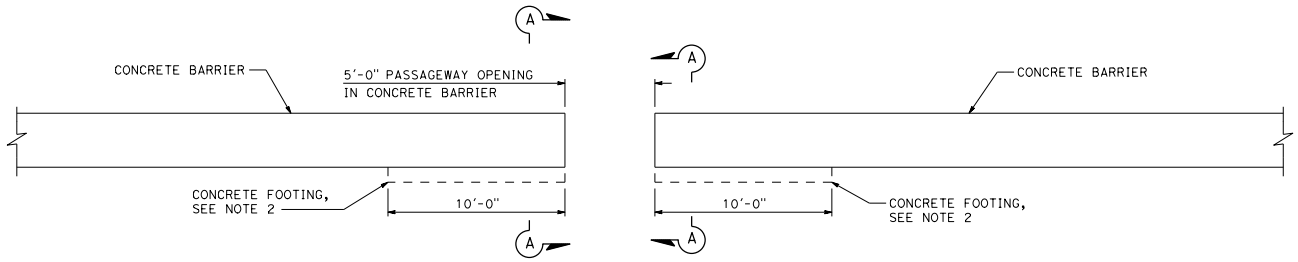

ELEVATION

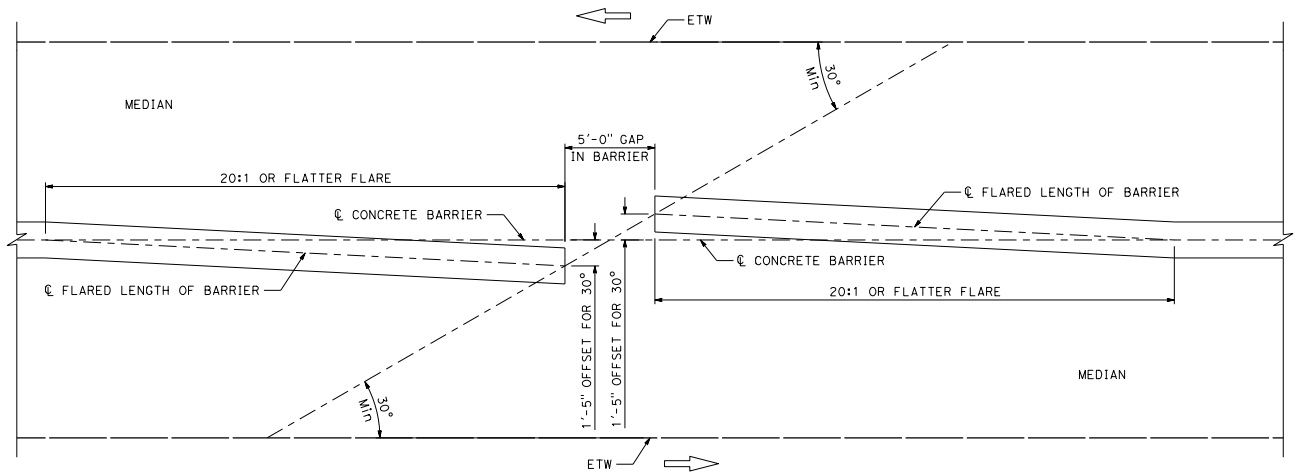

PLAN

NOTES:

1. Type ML Passageway typically used for crossing of large size animals.
2. Barrier end anchorage and reinforcement shall be constructed as shown in Section A-A of this plan and as shown on Standard Plan A76AB.
3. Minimum length of barrier between wildlife passageways should be 100'-0".
4. See Standard Plan A76AB for footing reinforcement details.

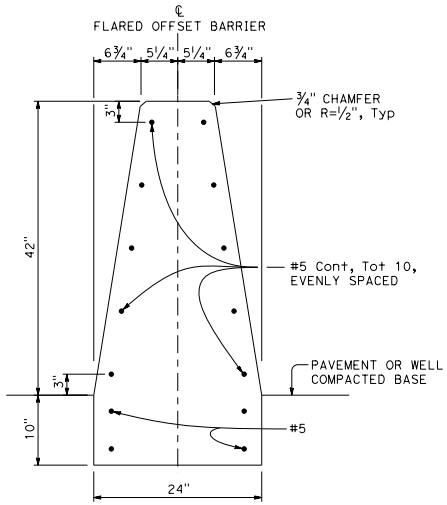

SECTION A-A

See Notes 2 and 4

STATE OF CALIFORNIA
DEPARTMENT OF TRANSPORTATION

CONCRETE BARRIER WILDLIFE PASSAGEWAY (TYPE ML)

NO SCALE

A76L

2026 STANDARD PLAN A76L

7-1-26

Return to Table of Contents

Dist	COUNTY	ROUTE	POST MILES TOTAL PROJECT	SHEET No.	TOTAL SHEETS

Jawad Naderi
REGISTERED CIVIL ENGINEER

September 18, 2026
PLANS APPROVAL DATE

REGISTERED PROFESSIONAL ENGINEER
Mohammad Jawad Naderi
No. C96340
Exp. 9-30-26
CIVIL
STATE OF CALIFORNIA

THE STATE OF CALIFORNIA OR ITS OFFICERS OR AGENTS SHALL NOT BE RESPONSIBLE FOR THE ACCURACY OR COMPLETENESS OF SCANNED COPIES OF THIS PLAN SHEET.

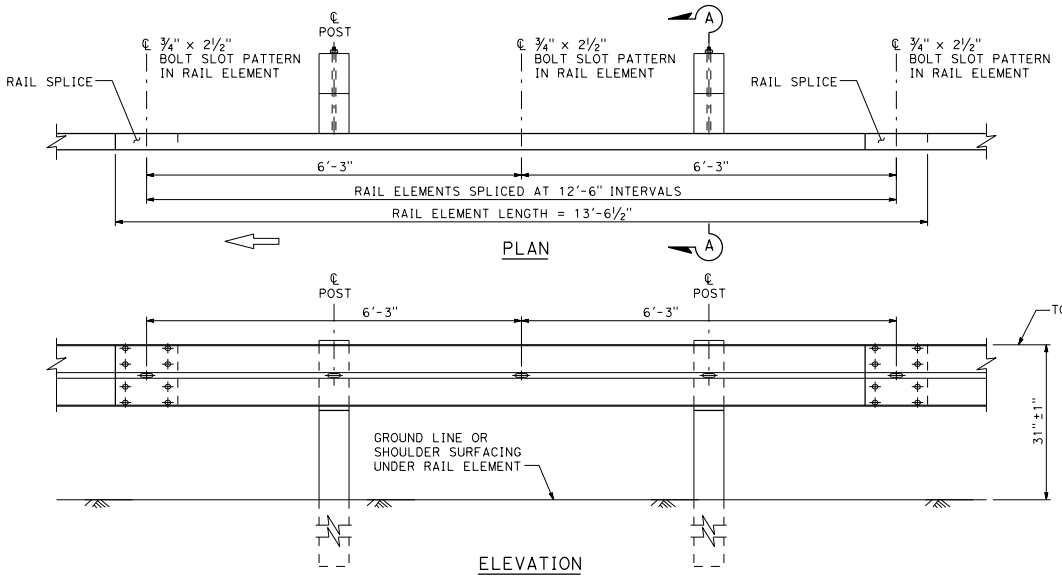

MIDWEST GUARDRAIL SYSTEM WITH WOOD POST AND BLOCKS

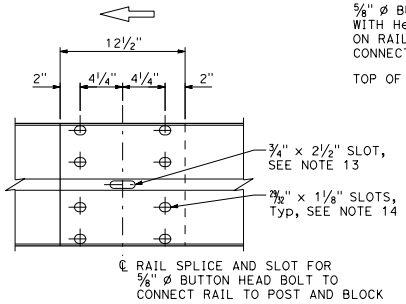

ELEVATION

RAIL ELEMENT SPLICE DETAIL

a) Connect the overlapped end of the rail elements with ⅝" ø x 1¼" button head oval shoulder splice bolts inserted into the 29/32" x 1⅛" slots and bolted together with ⅝" ø recessed hex nuts. Recess of hex nut points toward rail element. A total of 8 bolts and nuts are to be used at each rail splice connection.

b) The ends of the rail elements are to be overlapped in the direction of traffic, see details.

c) Where end cap is to be attached to the end of a rail element, a total of 4 of the above described splice bolts and nuts are to be used.

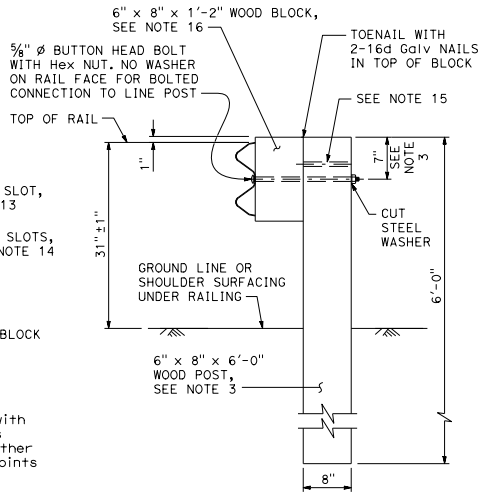

SECTION A-A

TYPICAL WOOD LINE POST INSTALLATION

See Note 4

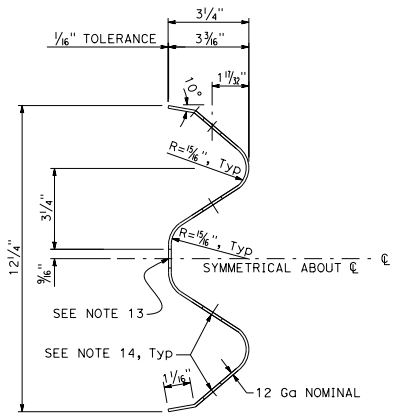

SECTION THRU RAIL ELEMENT

NOTES:

1. For details of steel post installations, see Standard Plan A77L2.
2. For details of standard hardware used to construct MGS, see Standard Plan A77M1.
3. For details of wood posts and wood blocks used to construct MGS, see Standard Plan A77N1.
4. For additional installation details, see Standard Plan A77N3.
5. MGS post spacing to be 6'-3" center to center, except as otherwise noted.
6. For MGS typical layouts, see the A77P, A77Q and A77R series of Standard Plans.
7. If railing is connected to terminal system end treatment, use 31" height terminal system end treatment.
8. For MGS end anchor details, see Standard Plans A77S1 and A77T2.
9. For details of MGS transition to Approach Guardrail Transition (Type AGT), see Standard Plan A79A1.
10. For details of MGS connection to bridge railing, see Standard Plans A79B1 and A79B2.
11. For MGS connection details to abutments and walls, see Standard Plans A79C1 and A79C2.
12. For typical MGS delineation and dike positioning details, see Standard Plan A77N4.
13. Slotted hole for bolted connection of rail element to block and post.
14. Slotted holes for splice bolts to overlap ends of rail element.
15. Additional hole in uppermost portion of line post is for potential future adjustments of railing height. See Standard Plan A77N1.
16. 6" x 12" x 1'-2" block must be used with 6" Type A dike.
17. Install posts in soil.

STATE OF CALIFORNIA
DEPARTMENT OF TRANSPORTATION

MIDWEST GUARDRAIL SYSTEM STANDARD RAILING SECTION (WOOD POST WITH WOOD BLOCK)

NO SCALE

A77L1

2026 STANDARD PLAN A77L1

7-1-26

Return to Table of Contents

Dist	COUNTY	ROUTE	POST MILES TOTAL PROJECT	SHEET No.	TOTAL SHEETS

Jawad Naderi
REGISTERED CIVIL ENGINEER

September 18, 2026
PLANS APPROVAL DATE

REGISTERED PROFESSIONAL ENGINEER
Mohammad Jawad Naderi
No. C96340
Exp. 9-30-26
CIVIL
STATE OF CALIFORNIA

THE STATE OF CALIFORNIA OR ITS OFFICERS OR AGENTS SHALL NOT BE RESPONSIBLE FOR THE ACCURACY OR COMPLETENESS OF SCANNED COPIES OF THIS PLAN SHEET.

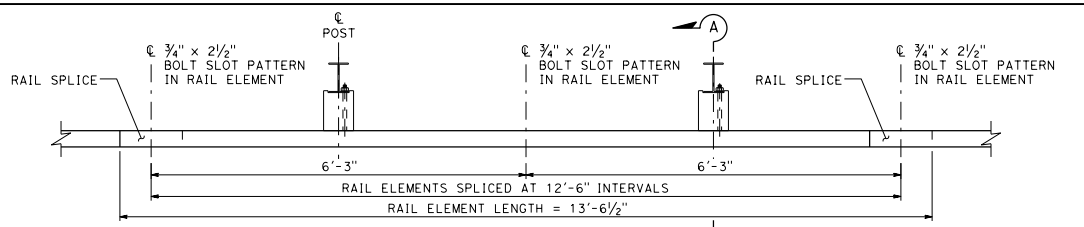

PLAN

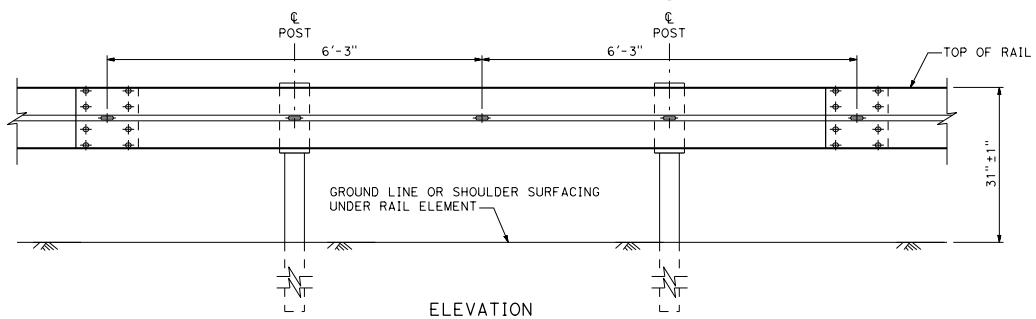

ELEVATION

MIDWEST GUARDRAIL SYSTEM WITH STEEL POSTS AND NOTCHED WOOD OR NOTCHED RECYCLED PLASTIC BLOCKS

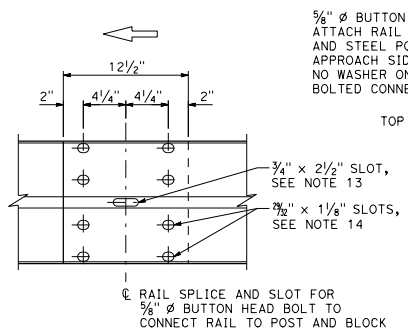

ELEVATION

RAIL ELEMENT SPLICE DETAIL

a) Connect the overlapped end of the rail elements with ⅝" ø x 1¼" button head oval shoulder splice bolts inserted into the 29/32" x 1⅛" slots and bolted together with ⅝" ø recessed hex nuts. Recess of hex nut points toward rail element. A total of 8 bolts and nuts are to be used at each rail splice connection.

b) The ends of the rail elements are to be overlapped in the direction of traffic, see details.

c) Where end cap is to be attached to the end of a rail element, a total of 4 of the above described splice bolts and nuts are to be used.

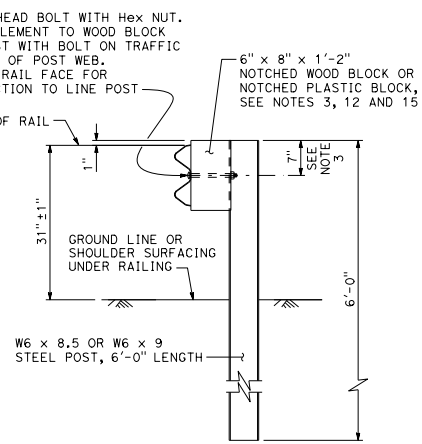

SECTION A-A

TYPICAL STEEL LINE POST INSTALLATION

See Note 4

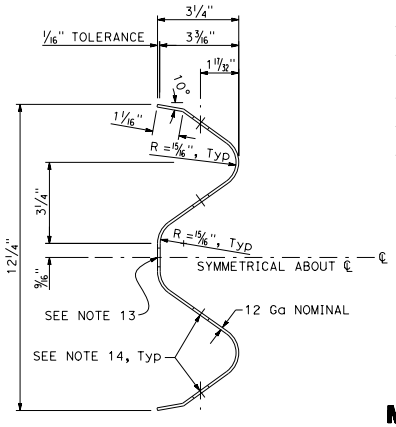

SECTION THRU RAIL ELEMENT

NOTES:

1. For details of wood post installations, see Standard Plan A77L1.
2. For details of standard hardware used to construct MGS, see Standard Plan A77M1.
3. For details of steel posts and notched wood blocks used to construct MGS, see Standard Plan A77N2.
4. For additional installation details, see Standard Plan A77N3.
5. MGS post spacing to be 6'-3" center to center, except as otherwise noted.
6. For MGS typical layouts, see the A77P, A77Q and A77R series of Standard Plans.
7. If railing is connected to terminal system end treatment, use 31" height terminal system end treatment.
8. For MGS end anchor details, see Standard Plans A77S1 and A77T2.
9. For details of MGS transition to Approach Guardrail Transition (Type AGT), see Standard Plan A79A1.
10. For details of MGS connection to bridge railings, see Standard Plans A79B1 and A79B2.
11. For dike positioning and MGS delineation details, see Standard Plan A77N4.
12. Notched face of block faces steel post.
13. Slotted hole for bolted connection of rail element to block and post.
14. Slotted holes for splice bolts to overlap ends of rail element.
15. 6" x 12" x 1'-2" block must be used with 6" Type A dike.
16. Install posts in soil.

STATE OF CALIFORNIA
DEPARTMENT OF TRANSPORTATION

MIDWEST GUARDRAIL SYSTEM STANDARD RAILING SECTION (STEEL POST WITH NOTCHED WOOD OR NOTCHED RECYCLED PLASTIC BLOCK)

NO SCALE

A77L2

2026 STANDARD PLAN A77L2

7-1-26

Return to Table of Contents

Dist	COUNTY	ROUTE	POST MILES TOTAL PROJECT	SHEET No.	TOTAL SHEETS

Jawad Naderi
REGISTERED CIVIL ENGINEER

September 18, 2026
PLANS APPROVAL DATE

REGISTERED PROFESSIONAL ENGINEER
Mohammad Jawad Naderi
No. C96340
Exp. 9-30-26
CIVIL
STATE OF CALIFORNIA

THE STATE OF CALIFORNIA OR ITS OFFICERS OR AGENTS SHALL NOT BE RESPONSIBLE FOR THE ACCURACY OR COMPLETENESS OF SCANNED COPIES OF THIS PLAN SHEET.

NOTE:

1. Refer to Standard Plans A77L1 and A77L2 for component details for MGS not shown on this plan.

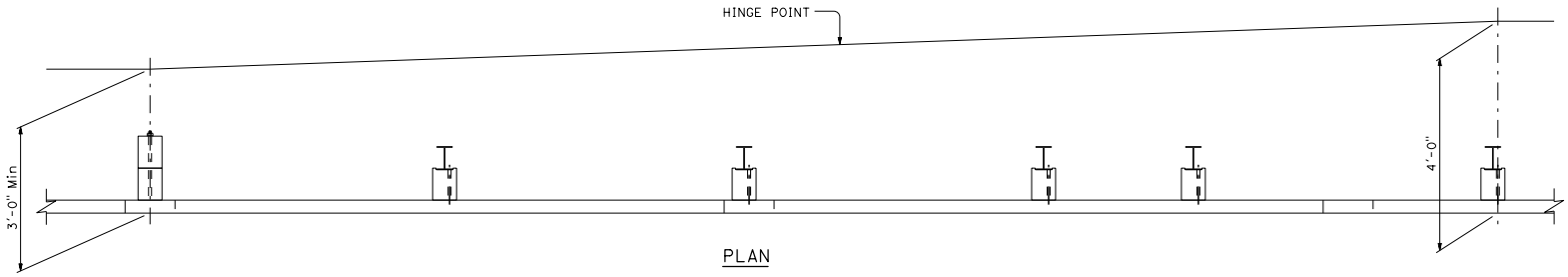

PLAN

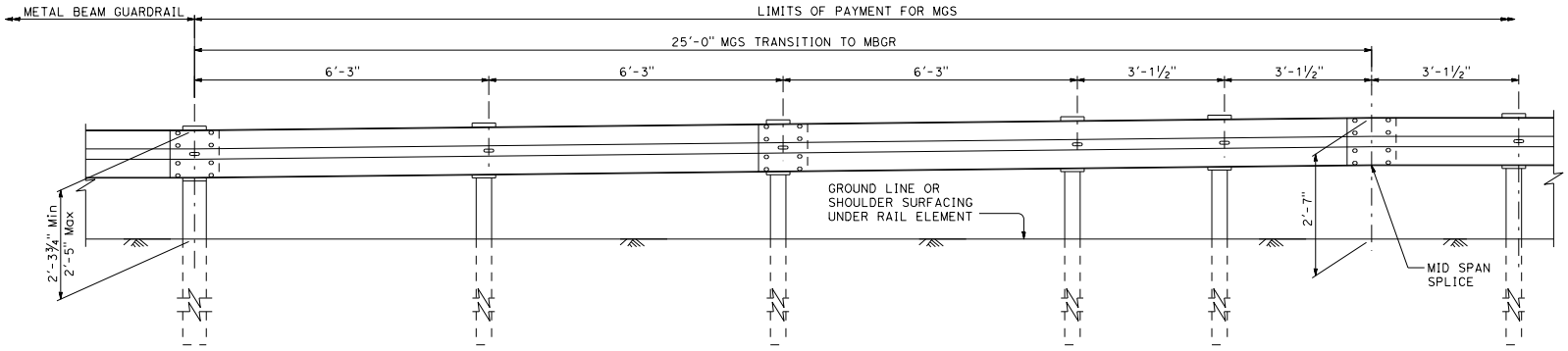

ELEVATION

STATE OF CALIFORNIA
DEPARTMENT OF TRANSPORTATION

MIDWEST GUARDRAIL SYSTEM TRANSITION TO METAL BEAM GUARDRAIL

NO SCALE

A77L4

2026 STANDARD PLAN A77L4

7-1-26

Return to Table of Contents

Dist	COUNTY	ROUTE	POST MILES TOTAL PROJECT	SHEET No.	TOTAL SHEETS

Jawad Naderi
REGISTERED CIVIL ENGINEER

September 18, 2026
PLANS APPROVAL DATE

REGISTERED PROFESSIONAL ENGINEER
Mohammad Jawad Naderi
No. C96340
Exp. 9-30-26
CIVIL
STATE OF CALIFORNIA

THE STATE OF CALIFORNIA OR ITS OFFICERS OR AGENTS SHALL NOT BE RESPONSIBLE FOR THE ACCURACY OR COMPLETENESS OF SCANNED COPIES OF THIS PLAN SHEET.

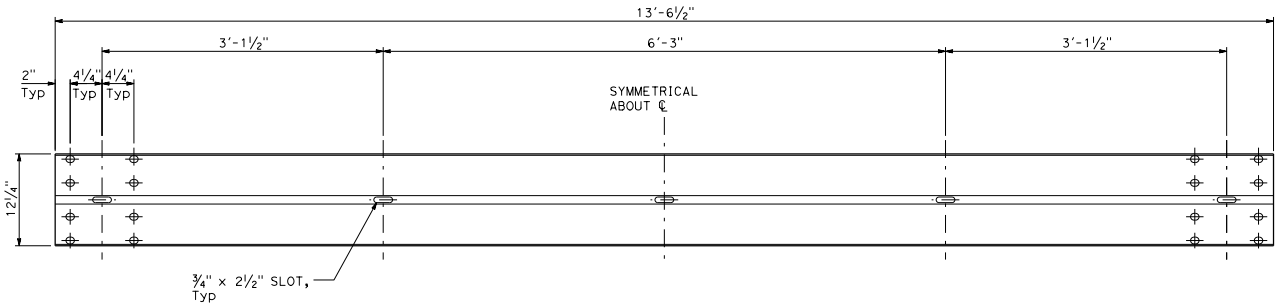

TYPICAL RAIL ELEMENT

NOTE:

1. Slotted holes for splice bolts to overlap ends of rail element.

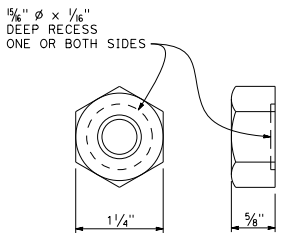

⅝" ø RECESS NUT

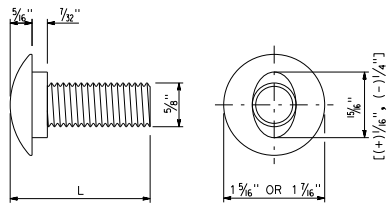

⅝" ø BUTTON HEAD BOLT

BUTTON HEAD BOLT	
L	THREAD LENGTH
1¼"	FULL THREAD LENGTH
2"	FULL THREAD LENGTH
10"	4" Min THREAD LENGTH
18"	4" Min THREAD LENGTH
20"	4" Min THREAD LENGTH
22"	4" Min THREAD LENGTH
26"	4" Min THREAD LENGTH
36"	4" Min THREAD LENGTH
** 2¾"	2" Min THREAD LENGTH
** 19"	4" Min THREAD LENGTH

** For nested rail applications

NOMIMAL GAUGE THICKNESS

12 Ga is 0.108"
10 Ga is 0.138"

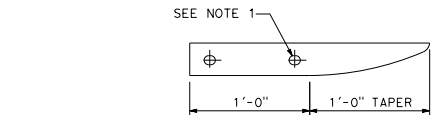

PLAN

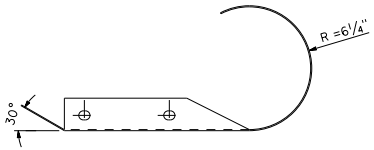

PLAN

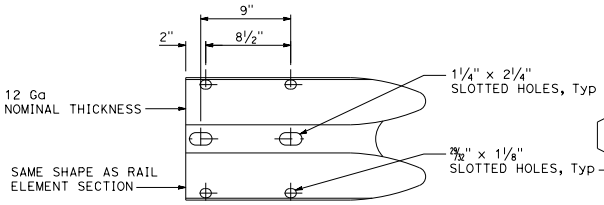

ELEVATION

END CAP (TYPE A)

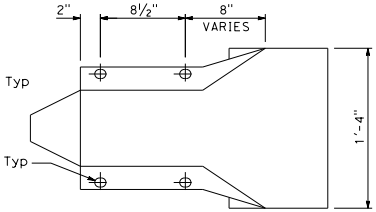

ELEVATION

END CAP (TYPE B)

STATE OF CALIFORNIA
DEPARTMENT OF TRANSPORTATION

MIDWEST GUARDRAIL SYSTEM STANDARD HARDWARE

NO SCALE

A77M1

2026 STANDARD PLAN A77M1

7-1-26

Return to Table of Contents

Dist	COUNTY	ROUTE	POST MILES TOTAL PROJECT	SHEET No.	TOTAL SHEETS

Jawad Naderi
REGISTERED CIVIL ENGINEER

September 18, 2026
PLANS APPROVAL DATE

REGISTERED PROFESSIONAL ENGINEER
Mohammad Jawad Naderi
No. C96340
Exp. 9-30-26
CIVIL
STATE OF CALIFORNIA

THE STATE OF CALIFORNIA OR ITS OFFICERS OR AGENTS SHALL NOT BE RESPONSIBLE FOR THE ACCURACY OR COMPLETENESS OF SCANNED COPIES OF THIS PLAN SHEET.

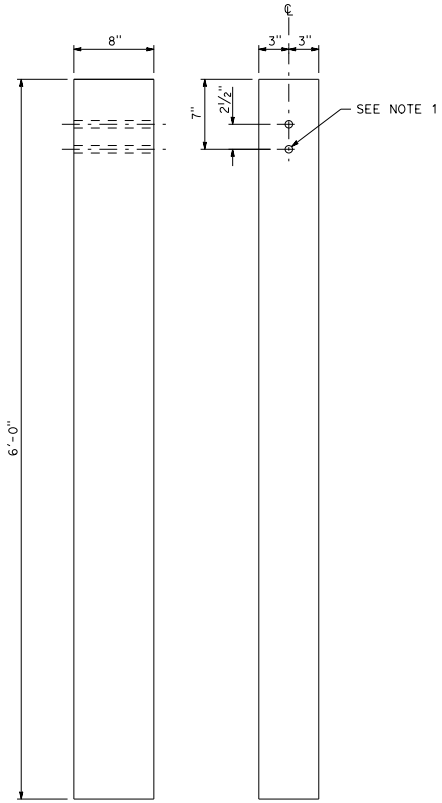

SIDE FRONT

6" x 8" WOOD POST
See Note 3

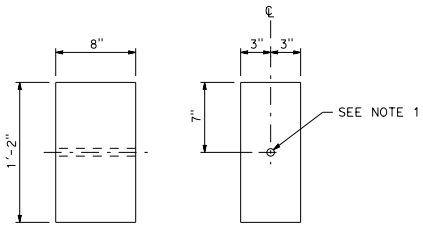

SIDE FRONT

6" x 8" WOOD BLOCK
See Note 3

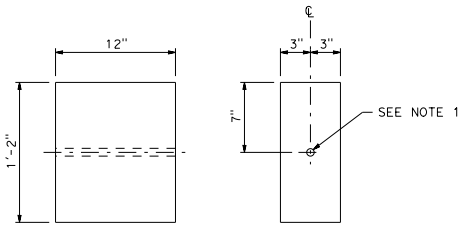

SIDE FRONT

6" x 12" WOOD BLOCK
See Note 4

NOTES:

1. All holes in wood posts and blocks shall be ¾" Ø ±1/16".
2. Dimensions shown for wood post are nominal.
3. This post and block combination used for standard line post sections of MGS.
4. Must be used with 6" height Type A dike.

STATE OF CALIFORNIA
DEPARTMENT OF TRANSPORTATION

MIDWEST GUARDRAIL SYSTEM WOOD POST AND WOOD BLOCK DETAILS

NO SCALE

A77N1

2026 STANDARD PLAN A77N1

7-1-26

Return to Table of Contents

Dist	COUNTY	ROUTE	POST MILES TOTAL PROJECT	SHEET No.	TOTAL SHEETS

Jawad Naderi
REGISTERED CIVIL ENGINEER

September 18, 2026
PLANS APPROVAL DATE

REGISTERED PROFESSIONAL ENGINEER
Mohammad Jawad Naderi
No. C96340
Exp. 9-30-26
CIVIL
STATE OF CALIFORNIA

THE STATE OF CALIFORNIA OR ITS OFFICERS OR AGENTS SHALL NOT BE RESPONSIBLE FOR THE ACCURACY OR COMPLETENESS OF SCANNED COPIES OF THIS PLAN SHEET.

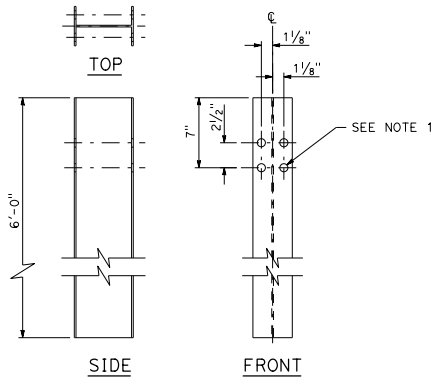

W6 x 8.5 OR W6 x 9
STEEL POST
See Note 4

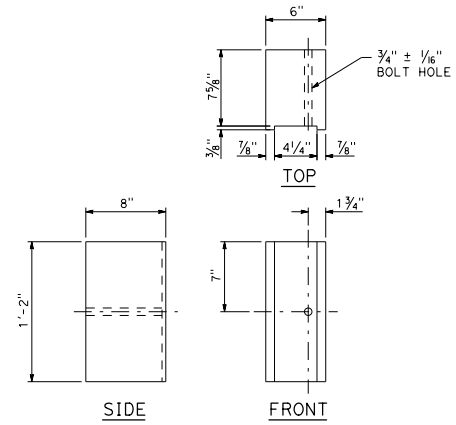

6" x 8"
NOTCHED WOOD OR PLASTIC BLOCK

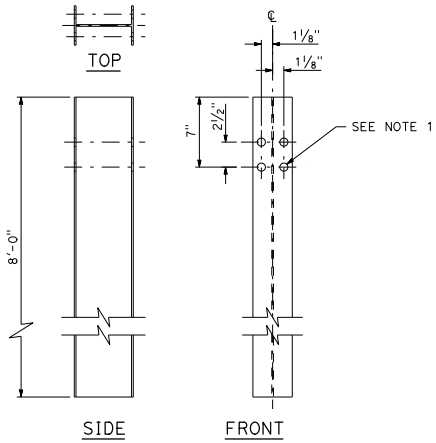

W6 x 8.5 OR W6 x 9
STEEL POST
See Note 6

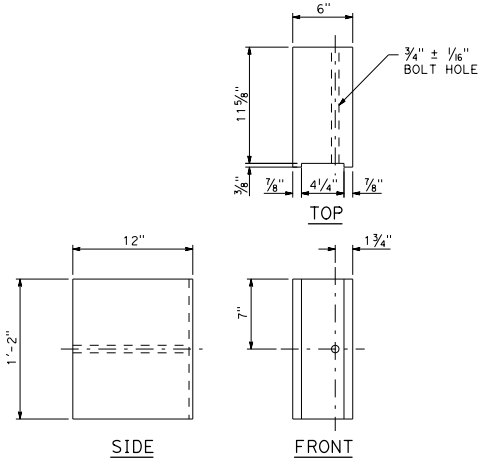

6" x 12"
NOTCHED WOOD OR PLASTIC BLOCK
See Notes 2, 3 and 7

NOTES:

1. All holes in steel post shall be 13/16" ø maximum.
2. Dimensions shown for wood block are nominal.
3. Notched face of block faces steel post.
4. 6'-0" length posts to be used for typical roadway installation. See Standard Plan A77N3.
5. The standard block on W6 x 8.5 or W6 x 9 steel post separates the metal beam guardrail element 8" from the post. The 12" block is an option to the 8" block.
6. This post to be used for line post sections of MGS on narrow roadways. Post longer than 6' must be labeled on post web with 2" letters using black acrylic paint.
7. 6" x 12" block must be used with 6" Type A dike.

STATE OF CALIFORNIA
DEPARTMENT OF TRANSPORTATION

MIDWEST GUARDRAIL SYSTEM STEEL POST AND BLOCK DETAILS

NO SCALE

A77N2

2026 STANDARD PLAN A77N2

7-1-26

Return to Table of Contents

Dist	COUNTY	ROUTE	POST MILES TOTAL PROJECT	SHEET No.	TOTAL SHEETS

Jawad Naderi
REGISTERED CIVIL ENGINEER

September 18, 2026
PLANS APPROVAL DATE

REGISTERED PROFESSIONAL ENGINEER
Mohammad Jawad Naderi
No. C96340
Exp. 9-30-26
CIVIL
STATE OF CALIFORNIA

THE STATE OF CALIFORNIA OR ITS OFFICERS OR AGENTS SHALL NOT BE RESPONSIBLE FOR THE ACCURACY OR COMPLETENESS OF SCANNED COPIES OF THIS PLAN SHEET.

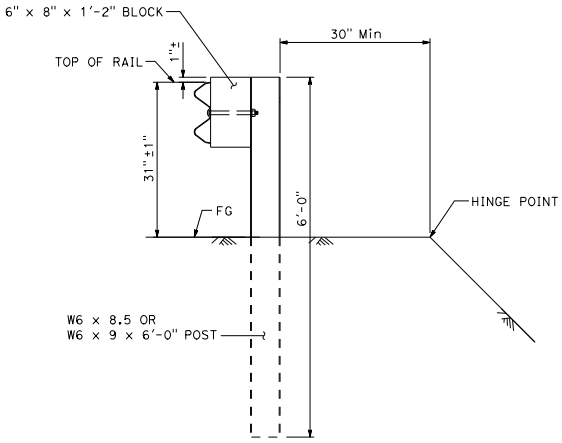

DETAIL A

TYPICAL ROADWAY INSTALLATION

See Note 1

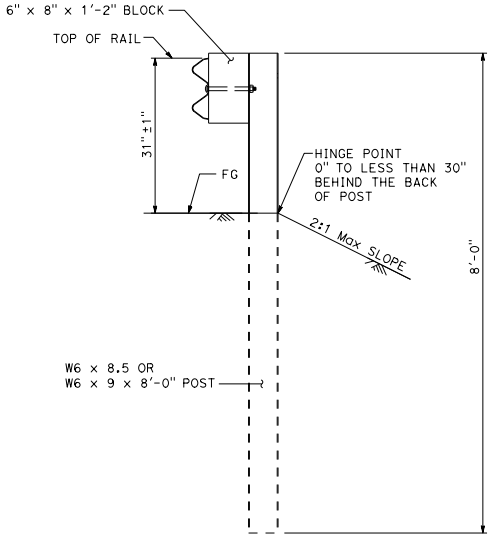

DETAIL B

NARROW ROADWAY INSTALLATION

See Note 1

POST EMBEDMENT

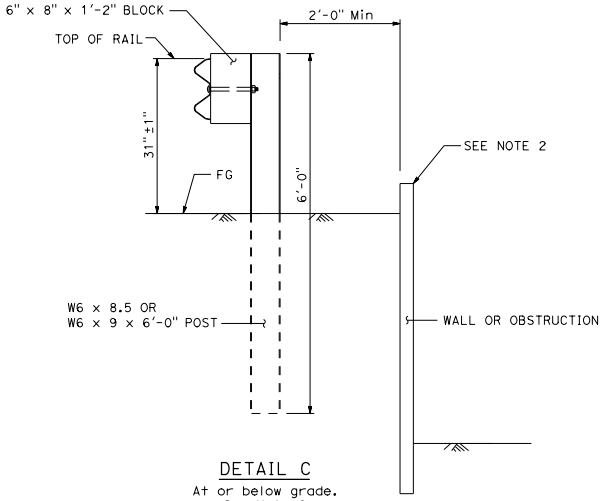

DETAIL C

At or below grade.
See Note 6

NOTES:

1. These installation details are also applicable to wood line post installations. For Detail A, C, and D, where wood post installations are constructed, 6" x 8" x 6'-0" post, with blocks are to be used in place of steel post and block. For Detail B, there is no wood post option. For additional installation details, see Standard Plans A77L1 and A77L2.
2. When maximum height of obstruction behind guardrail post is 6" above grade, see Detail C.
3. If distance from back of post to the near edge of fixed object is less than 3'-0", see Strengthened Rail Section on Standard Plans A77R1 and A77R4.
4. For dike positioning with MGS installations, see Standard Plan A77N4.
5. Typical 6" x 8" notched wood or plastic block shown. 6" x 12" notched wood or plastic block is interchangeable in these details if 6" dike is placed.
6. See Standard Plans B3-7A and B3-7B when placing MGS in front of reinforced masonry walls.

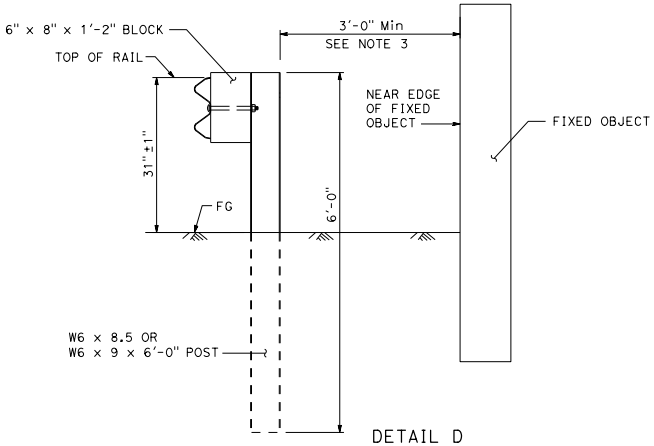

DETAIL D

Above grade

INSTALLATION AT

WALLS OR OBSTRUCTIONS

STATE OF CALIFORNIA
DEPARTMENT OF TRANSPORTATION

MIDWEST GUARDRAIL SYSTEM TYPICAL LINE POST EMBEDMENT AND HINGE POINT OFFSET DETAILS

NO SCALE

A77N3

2026 STANDARD PLAN A77N3

7-1-26

Return to Table of Contents

Dist	COUNTY	ROUTE	POST MILES TOTAL PROJECT	SHEET No.	TOTAL SHEETS

Jawad Naderi
REGISTERED CIVIL ENGINEER

September 18, 2026
PLANS APPROVAL DATE

REGISTERED PROFESSIONAL ENGINEER
Mohammad Jawad Naderi
No. C96340
Exp. 9-30-26
CIVIL
STATE OF CALIFORNIA

THE STATE OF CALIFORNIA OR ITS OFFICERS OR AGENTS SHALL NOT BE RESPONSIBLE FOR THE ACCURACY OR COMPLETENESS OF SCANNED COPIES OF THIS PLAN SHEET.

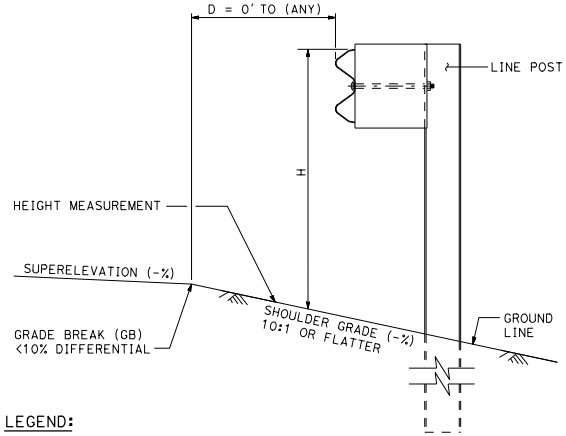

CASE A

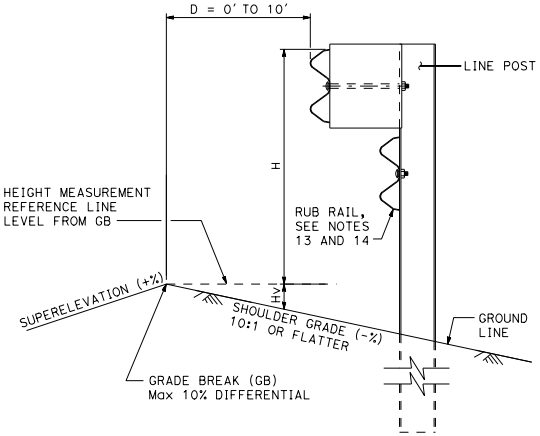

CASE B

LEGEND:

D = DISTANCE, GB TO FACE OF RAIL
H = HEIGHT AT FACE OF RAIL
H = 31" ±1" FOR MGS
H = 34" ±1" FOR THRIE BEAM (TYPE M) (NOT SHOWN)

MEASURE HEIGHT DETAIL AT GRADE BREAK (GB)

Place rub rail if Hv is greater than or equal to 3" for MGS.

NOTES:

1. Details shown on this sheet apply to W-beam guardrail and thrie beam.
2. Dike must be placed in the standard position unless otherwise shown. For curb and dike details, see Standard Plans A87A and A87B.
3. See Standard Plans for dike type and placement within and near terminal systems.
4. See Standard Plan A77S1 for dike placement near SFT-M end anchor.
5. The maximum height of dike or curb with MGS shall be 6" and use 12" blocks.
6. When shown on project plans, front toe of dike may extend up to 7" in front of rail face when used with 12" blocks.
7. Do not install marker on the trailing end of a guardrail run.
8. Use 1/4" - 20 x 1" self-tapping screws in 0.22" ø holes or 1/4" bolts in 9/32" ø holes for steel post, or use 16d galv nails for wood post.
9. When guardrail end treatment is placed in a flared or offset configuration, use at least one delineator at location shown. See project plans for other placement of guardrail delineation.
10. When installing MGS with dike in areas requiring snow removal or frequently plowed areas, use 12" blocks.
11. Do not place mountable dike under guardrail.
12. Type C Dike may be placed at any offset in front of guardrail or terminal system.
13. Place rub rail when (H + Hv) is ≥ 34" for MGS, or ≥ 36" for Thrie Beam (Type M). Place MGS elements with no block for rub rail. Field drill post with 1" ø hole and attach rub rail to post with 5/8" ø button head bolt. Use rail element splice detail on Standard Plan A77L2, and bolt element at each post. No rub rail needed for GB differential < 9%. For GB differential = 10%, place rub rail when line rail is 4' to 8' from GB.
14. Maximum height of rail element with rub rail is 6" above standard rail height. Bottom of rub rail shall have a minimum distance of 4" above ground and should be parallel to rail. Maintain a minimum embedment of 36" for the post.
15. On approach end of rub rail, taper rail element behind first post. See Standard Plan A77T3 for details.

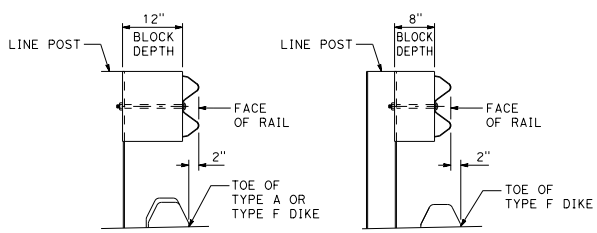

GUARDRAIL DIKE POSITIONING

Standard position for new or existing dike or curb, see Notes 2 through 6

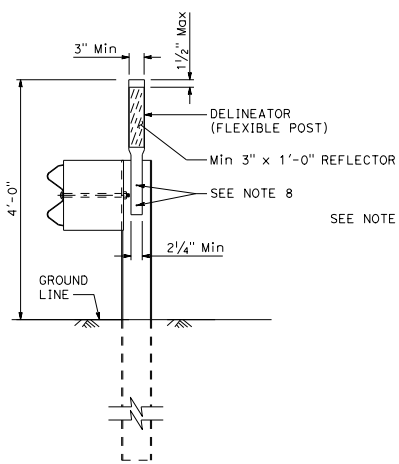

GUARDRAIL DELINEATION

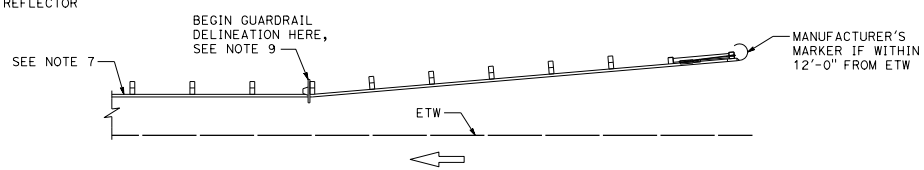

MARKER PLACEMENT GUARDRAIL DELINEATION

STATE OF CALIFORNIA
DEPARTMENT OF TRANSPORTATION

MIDWEST GUARDRAIL SYSTEM TYPICAL HEIGHT MEASUREMENT, DIKE POSITIONING, AND DELINEATION DETAILS

NO SCALE

A77N4

2026 STANDARD PLAN A77N4

7-1-26

Return to Table of Contents

Dist	COUNTY	ROUTE	POST MILES TOTAL PROJECT	SHEET No.	TOTAL SHEETS

REGISTERED CIVIL ENGINEER

September 18, 2026
PLANS APPROVAL DATE

REGISTERED PROFESSIONAL ENGINEER Radhika Mothkuri No. C95984 Exp. 6-30-28 CIVIL STATE OF CALIFORNIA

THE STATE OF CALIFORNIA OR ITS OFFICERS OR AGENTS SHALL NOT BE RESPONSIBLE FOR THE ACCURACY OR COMPLETENESS OF SCANNED COPIES OF THIS PLAN SHEET.

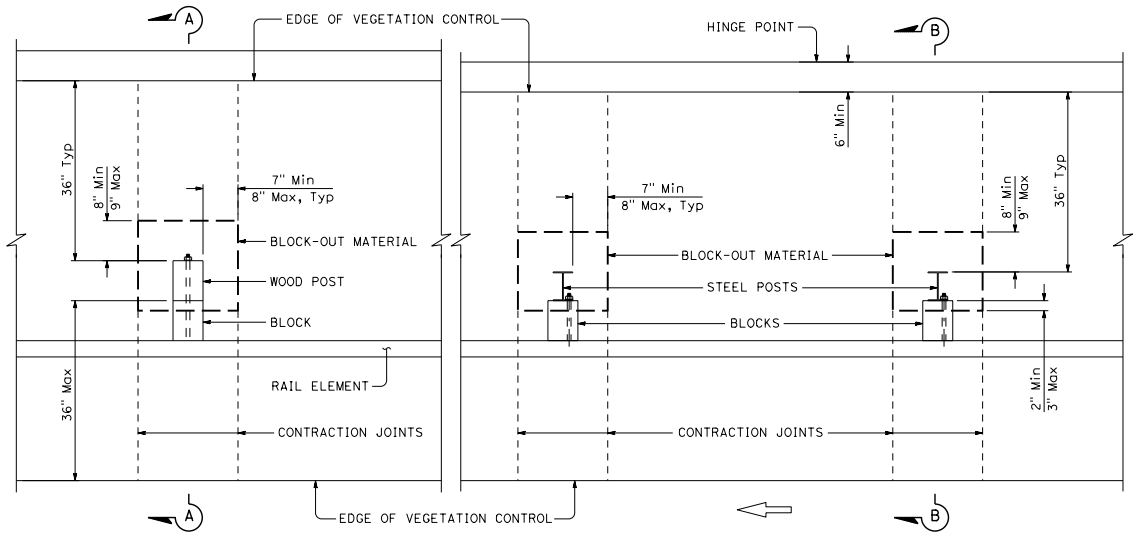

PLAN

NOTES:

1. Where the distance between back of post and hinge point is less than 42", construct vegetation control to 6" from hinge point while maintaining the block-out at back of post.
2. Where paved shoulder is constructed within 36" in front of the post, construct vegetation control to the edge of paved shoulder.
3. For wood post sizes, see Standard Plan A77N1.
4. For steel post sizes, see Standard Plan A77N2.
5. For details not shown, see Standard Plans A77L1 and A77L2.
6. Where vegetation control is adjacent to a dike on a cut slope, and for typical line post application only, vegetation control may be flush with the top edge of dike, see Note 10.
7. Vegetation control must slope to drain water.
8. Concrete over block-out material depth, construct ⅜" Min to ⅝" Max.
9. This plan for vegetation control installation only.
10. Do not place fill material or weed abatement to top of dike as shown in Section B-B within 25'-0" of terminals as shown on Standard Plans A77Q and A77R series.
11. Vegetation control must not cover any bolts, bearing plates, struts, holes in post, or hardware at ground level.

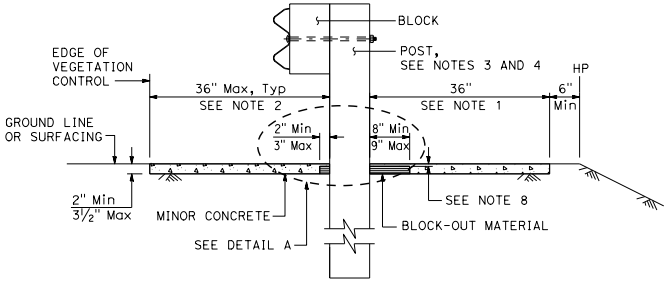

SECTION A-A
Without Existing Dike

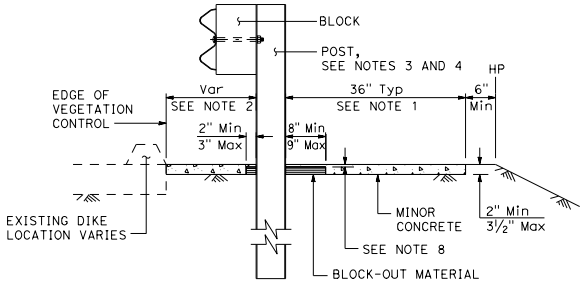

SECTION B-B
With Existing Dike

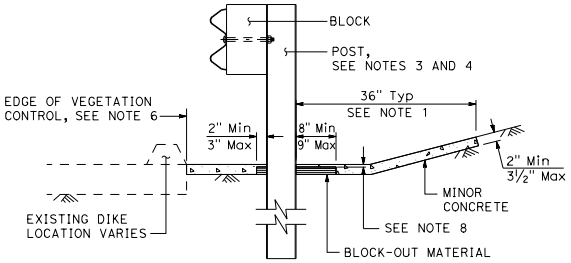

SECTION B-B
With Existing Dike on cut slope

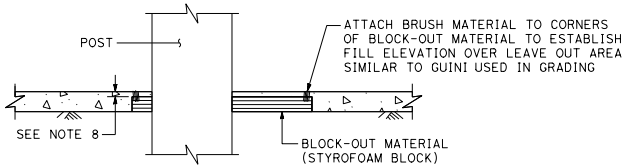

DETAIL A (OPTIONAL)

STATE OF CALIFORNIA
DEPARTMENT OF TRANSPORTATION

MINOR CONCRETE VEGETATION CONTROL GUARDRAIL SYSTEM

NO SCALE

A77N5

2026 STANDARD PLAN A77N5

7-1-26

Return to Table of Contents

Dist	COUNTY	ROUTE	POST MILES TOTAL PROJECT	SHEET No.	TOTAL SHEETS

REGISTERED CIVIL ENGINEER

September 18, 2026

PLANS APPROVAL DATE

REGISTERED PROFESSIONAL ENGINEER Radhika Mothkuri No. C95984 Exp. 6-30-28 CIVIL STATE OF CALIFORNIA

THE STATE OF CALIFORNIA OR ITS OFFICERS OR AGENTS SHALL NOT BE RESPONSIBLE FOR THE ACCURACY OR COMPLETENESS OF SCANNED COPIES OF THIS PLAN SHEET.

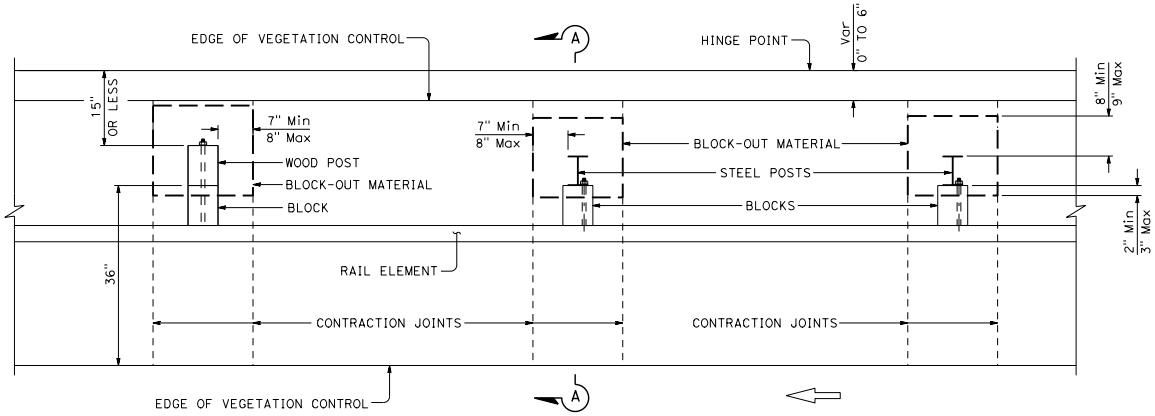

PLAN

See Note 1

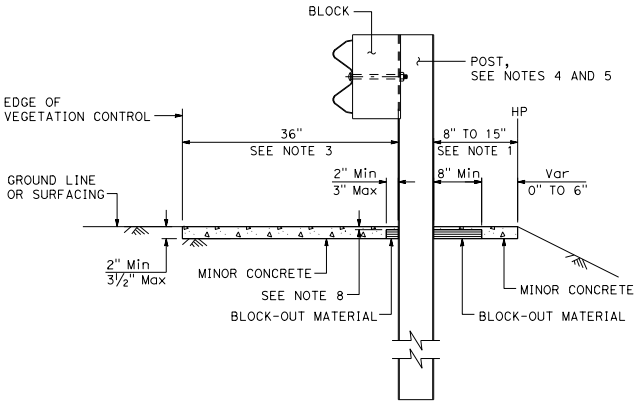

SECTION A-A

Without Existing Dike

NOTES:

1. Use the details on this sheet when the distance from the back of post to the hinge point is 15" or less. Use the details on Standard Plan A77N5 when the distance from the back of the post to the hinge point is greater than 15".
2. Construct vegetation control flush with the back edge of post, when distance from back of post to hinge point is less than 6".
3. Where paved shoulder is constructed within 36" in front of the post, construct vegetation control to the edge of paved shoulder.
4. For wood post sizes, see Standard Plan A77N1.
5. For steel post sizes, see Standard Plan A77N2.
6. For details not shown, see Standard Plans A77L1 and A77L2.
7. Vegetation control must slope away from post to drain water.
8. Concrete over block-out material depth, construct ⅜" Min to ⅝" Max.
9. This plan for vegetation control installation only.

STATE OF CALIFORNIA
DEPARTMENT OF TRANSPORTATION

MINOR CONCRETE VEGETATION CONTROL GUARDRAIL SYSTEM NARROW VEGETATION CONTROL INSTALLATION

NO SCALE

A77N5A

2026 STANDARD PLAN A77N5A

7-1-26

Return to Table of Contents

Dist	COUNTY	ROUTE	POST MILES TOTAL PROJECT	SHEET No.	TOTAL SHEETS

REGISTERED CIVIL ENGINEER

September 18, 2026

PLANS APPROVAL DATE

REGISTERED PROFESSIONAL ENGINEER Radhika Mothkuri No. C95984 Exp. 6-30-28 CIVIL STATE OF CALIFORNIA

THE STATE OF CALIFORNIA OR ITS OFFICERS OR AGENTS SHALL NOT BE RESPONSIBLE FOR THE ACCURACY OR COMPLETENESS OF SCANNED COPIES OF THIS PLAN SHEET.

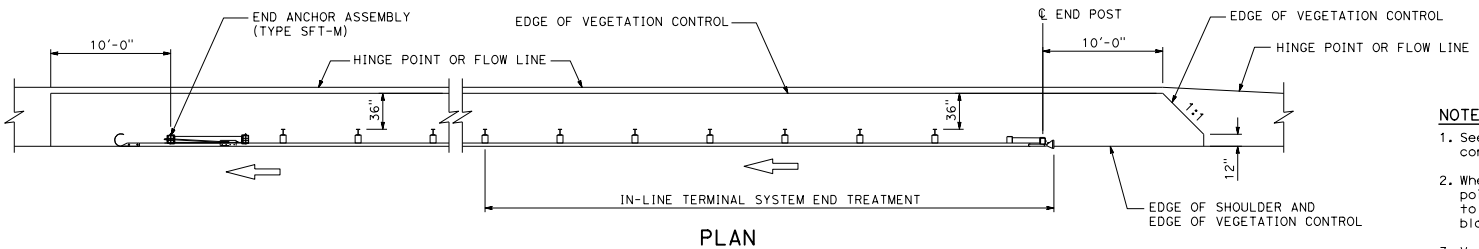

PLAN

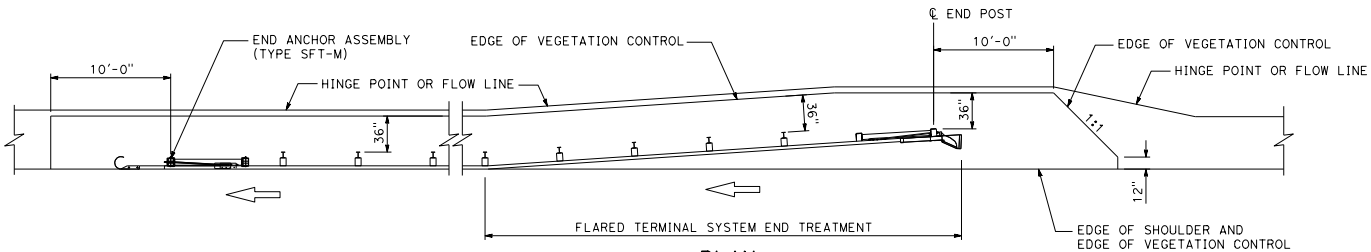

PLAN

NOTES:

1. See Standard Plan A77N5 for additional vegetation control details.
2. Where the distance between back of post and hinge point is less than 42", construct vegetation control to 6" from hinge point while maintaining the 8" block-out at back of post.
3. Vegetation control must slope to drain water.
4. This plan for vegetation control installation only.

STATE OF CALIFORNIA
DEPARTMENT OF TRANSPORTATION

MINOR CONCRETE VEGETATION CONTROL GUARDRAIL SYSTEM FOR TERMINAL SYSTEM END TREATMENTS

NO SCALE

A77N6

2026 STANDARD PLAN A77N6

7-1-26

Return to Table of Contents

Dist	COUNTY	ROUTE	POST MILES TOTAL PROJECT	SHEET No.	TOTAL SHEETS

REGISTERED CIVIL ENGINEER

September 18, 2026
PLANS APPROVAL DATE

REGISTERED PROFESSIONAL ENGINEER
Radhika Mothkuri
No. C95984
Exp. 6-30-28
CIVIL
STATE OF CALIFORNIA

THE STATE OF CALIFORNIA OR ITS OFFICERS OR AGENTS SHALL NOT BE RESPONSIBLE FOR THE ACCURACY OR COMPLETENESS OF SCANNED COPIES OF THIS PLAN SHEET.

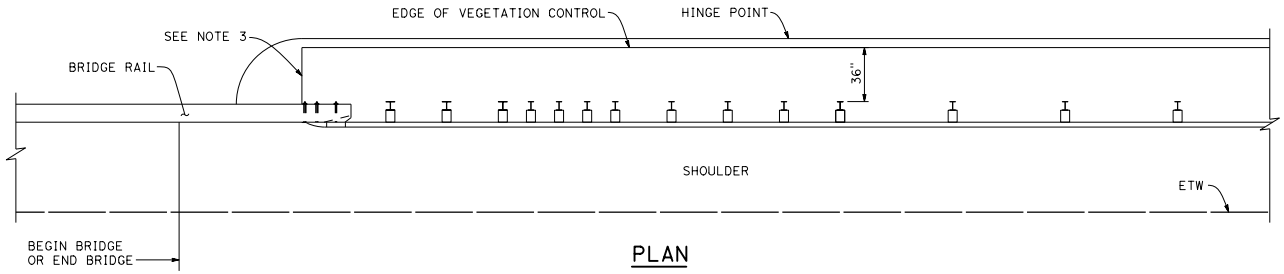

PLAN

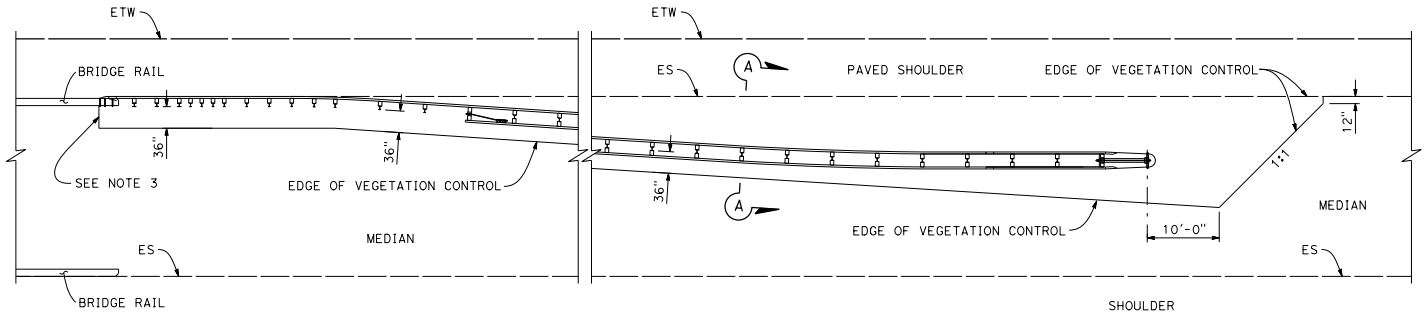

PLAN

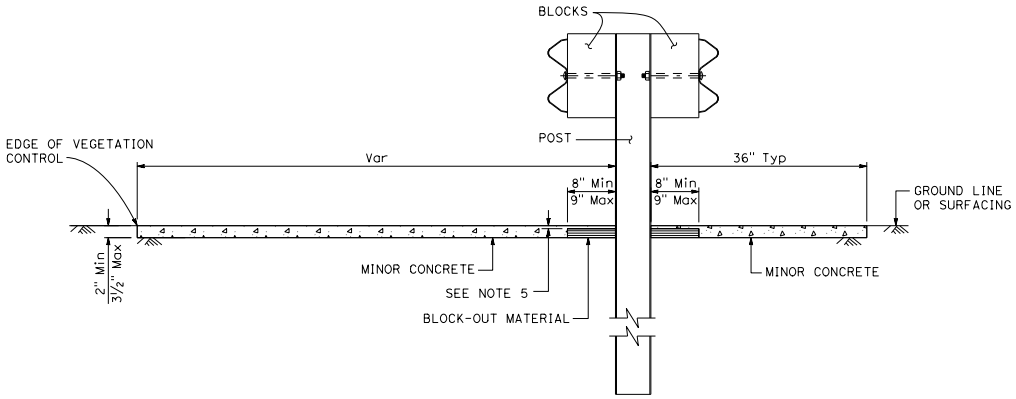

SECTION A-A

NOTES:

1. See Standard Plan A77N5 for additional vegetation control details.
2. Where the distance between back of post and hinge point is less than 42", construct vegetation control to 6" from hinge point while maintaining the 8" block-out at back of post.
3. End vegetation control at end of rail element.
4. Vegetation control must slope to drain water.
5. Concrete over block-out material depth, construct ⅜" Min to ⅝" Max.
6. This plan for vegetation control installation only.

STATE OF CALIFORNIA
DEPARTMENT OF TRANSPORTATION

MINOR CONCRETE VEGETATION CONTROL GUARDRAIL SYSTEM AT STRUCTURE APPROACH

NO SCALE

A77N7

2026 STANDARD PLAN A77N7

7-1-26

Return to Table of Contents

Dist	COUNTY	ROUTE	POST MILES TOTAL PROJECT	SHEET No.	TOTAL SHEETS

REGISTERED CIVIL ENGINEER

September 18, 2026

PLANS APPROVAL DATE

REGISTERED PROFESSIONAL ENGINEER Radhika Mothkuri No. C95984 Exp. 6-30-28 CIVIL STATE OF CALIFORNIA

THE STATE OF CALIFORNIA OR ITS OFFICERS OR AGENTS SHALL NOT BE RESPONSIBLE FOR THE ACCURACY OR COMPLETENESS OF SCANNED COPIES OF THIS PLAN SHEET.

NOTES:

1. See Standard Plan A77N5 for additional vegetation control details.
2. Where paved shoulder is constructed within 36" in front of the post, construct vegetation control to the edge of paved shoulder.
3. Vegetation control must slope to drain water.
4. This plan for vegetation control installation only.

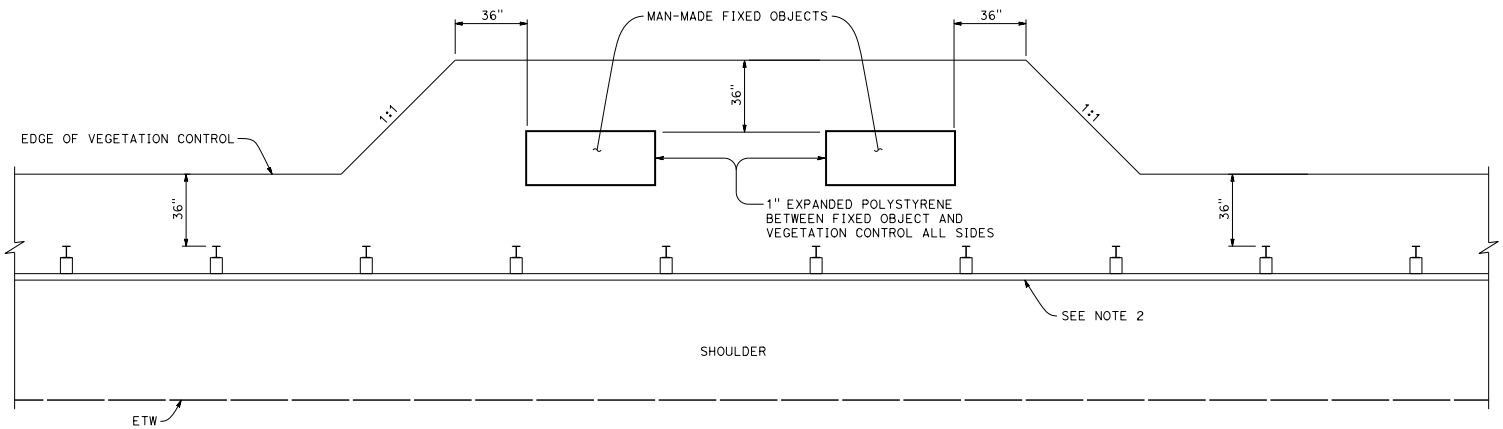

PLAN

Fixed object(s) on shoulder

STATE OF CALIFORNIA
DEPARTMENT OF TRANSPORTATION

MINOR CONCRETE VEGETATION CONTROL GUARDRAIL SYSTEM AT FIXED OBJECT

NO SCALE

A77N8

2026 STANDARD PLAN A77N8

7-1-26

Return to Table of Contents

Dist	COUNTY	ROUTE	POST MILES TOTAL PROJECT	SHEET No.	TOTAL SHEETS

REGISTERED CIVIL ENGINEER

September 18, 2026
PLANS APPROVAL DATE

REGISTERED PROFESSIONAL ENGINEER
Radhika Mothkuri
No. C95984
Exp. 6-30-28
CIVIL
STATE OF CALIFORNIA

THE STATE OF CALIFORNIA OR ITS OFFICERS OR AGENTS SHALL NOT BE RESPONSIBLE FOR THE ACCURACY OR COMPLETENESS OF SCANNED COPIES OF THIS PLAN SHEET.

NOTES:

1. See Standard Plan A77N5 for additional vegetation control details.
2. Where paved shoulder is constructed within 36" in front of the post, construct vegetation control to the edge of paved shoulder.
3. Vegetation control must slope to drain water.
4. Concrete over block-out material depth, construct 3/8" Min to 5/8" Max.
5. This plan for vegetation control installation only.

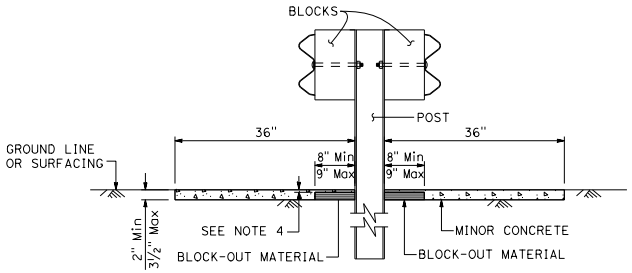

SECTION A-A

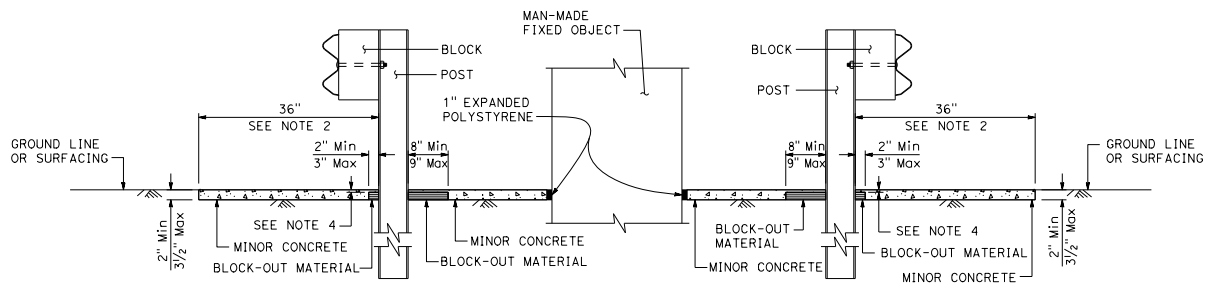

SECTION B-B

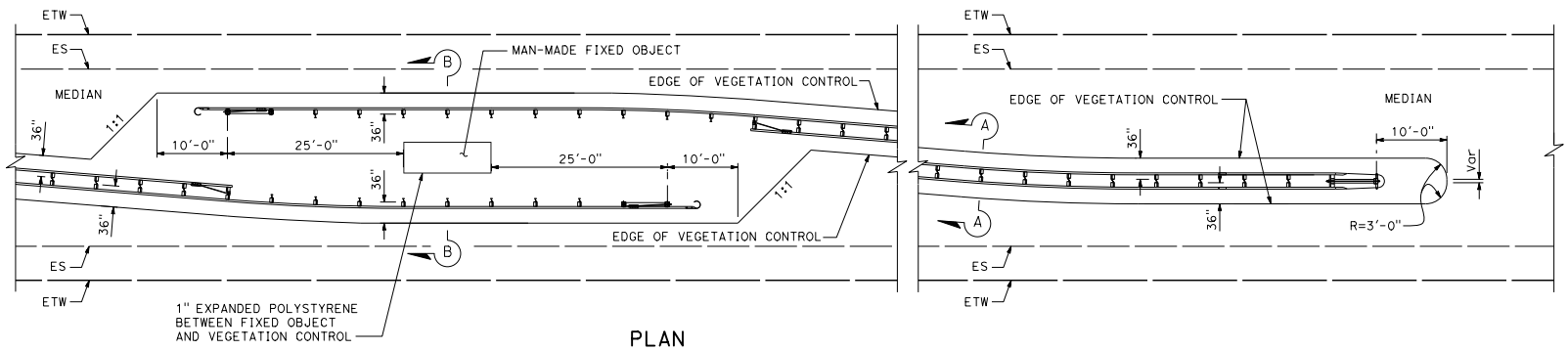

PLAN

Fixed object(s) in median

STATE OF CALIFORNIA
DEPARTMENT OF TRANSPORTATION

MINOR CONCRETE VEGETATION CONTROL GUARDRAIL SYSTEM AT FIXED OBJECT

NO SCALE

A77N9

7-1-26

2026 STANDARD PLAN A77N9

Return to Table of Contents

Dist	COUNTY	ROUTE	POST MILES TOTAL PROJECT	SHEET No.	TOTAL SHEETS

REGISTERED CIVIL ENGINEER

September 18, 2026
PLANS APPROVAL DATE

REGISTERED PROFESSIONAL ENGINEER Radhika Mothkuri No. C95984 Exp. 6-30-28 CIVIL STATE OF CALIFORNIA

THE STATE OF CALIFORNIA OR ITS OFFICERS OR AGENTS SHALL NOT BE RESPONSIBLE FOR THE ACCURACY OR COMPLETENESS OF SCANNED COPIES OF THIS PLAN SHEET.

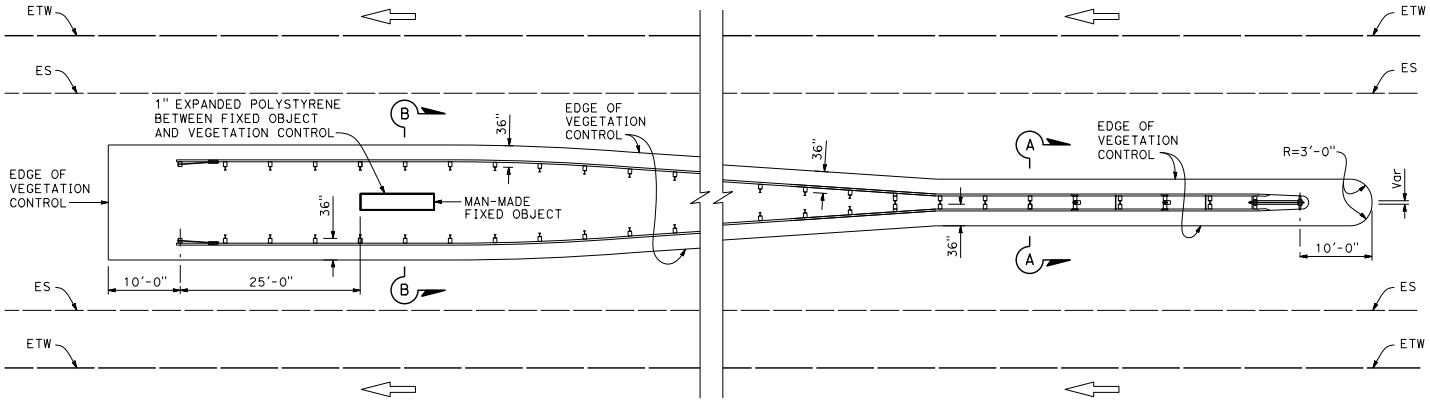

PLAN

Fixed object(s) between separate roadbeds
(One-Way Traffic)

NOTES:

1. See Standard Plan A77N5 for additional vegetation control details.
2. Where paved shoulder is constructed within 36" in front of the post, construct vegetation control to the edge of paved shoulder.
3. Vegetation control must slope to drain water.
4. Concrete over block-out material depth, construct 3/8" Min to 5/8" Max.
5. This plan for vegetation control installation only.

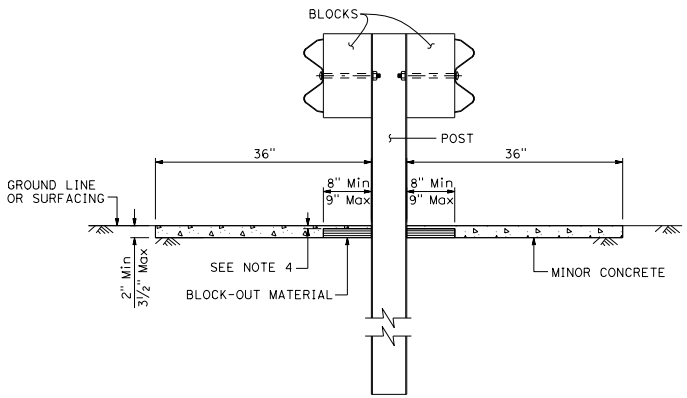

SECTION A-A

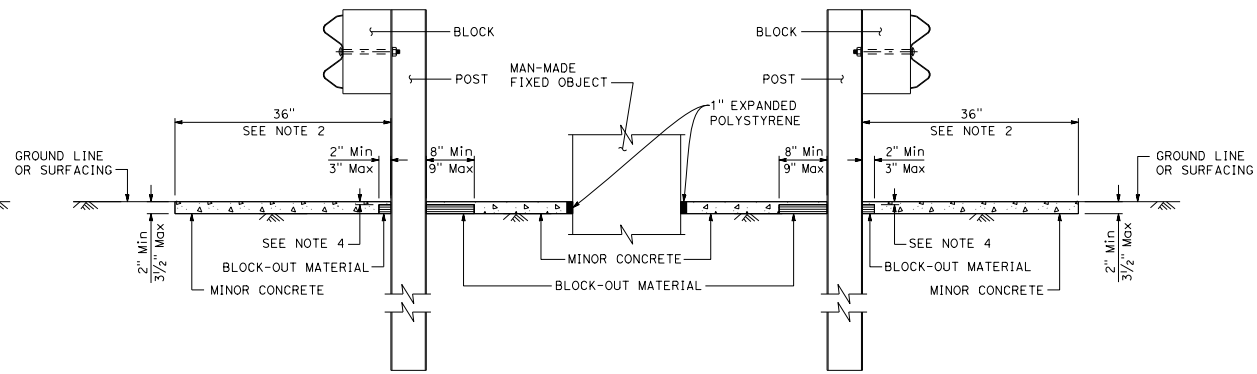

SECTION B-B

STATE OF CALIFORNIA
DEPARTMENT OF TRANSPORTATION

MINOR CONCRETE VEGETATION CONTROL GUARDRAIL SYSTEM AT FIXED OBJECT

NO SCALE

A77N10

2026 STANDARD PLAN A77N10

7-1-26

Return to Table of Contents

Dist	COUNTY	ROUTE	POST MILES TOTAL PROJECT	SHEET No.	TOTAL SHEETS

REGISTERED CIVIL ENGINEER

September 18, 2026

PLANS APPROVAL DATE

REGISTERED PROFESSIONAL ENGINEER Radhika Mothkuri No. C95984 Exp. 6-30-28 CIVIL STATE OF CALIFORNIA

THE STATE OF CALIFORNIA OR ITS OFFICERS OR AGENTS SHALL NOT BE RESPONSIBLE FOR THE ACCURACY OR COMPLETENESS OF SCANNED COPIES OF THIS PLAN SHEET.

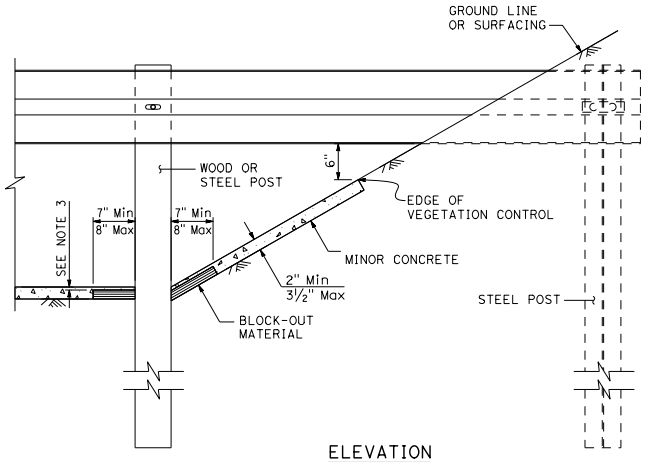

ELEVATION

BURIED POST END ANCHOR

See Note 5

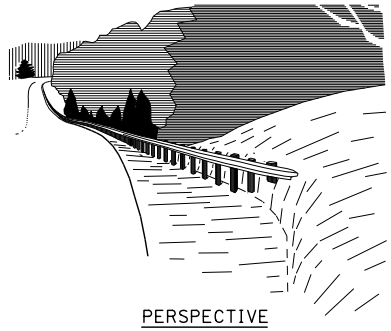

PERSPECTIVE

NOTES:

1. Minor concrete for vegetation control must not encounter the safety hardware including the anchor plate, ground strut, or bolts and nuts.
2. Vegetation control must slope to drain water.
3. Concrete over block-out material depth, construct ⅜" Min to ⅝" Max.
4. This plan for vegetation control installation only.
5. For buried post end anchor, refer to Standard Plans A77T2 and A77T3.
6. For End Anchor Assembly (Type SFT-M), refer to Standard Plan A77S1.

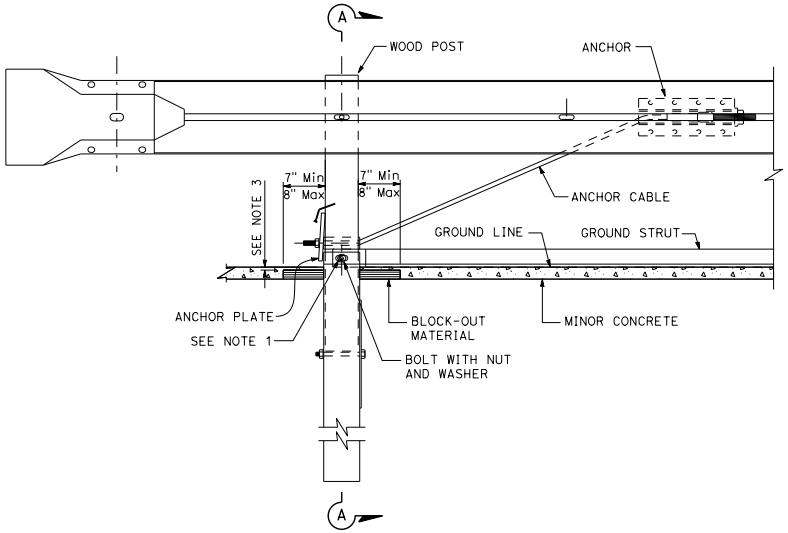

ELEVATION

END ANCHOR ASSEMBLY (TYPE SFT-M)

See Note 6

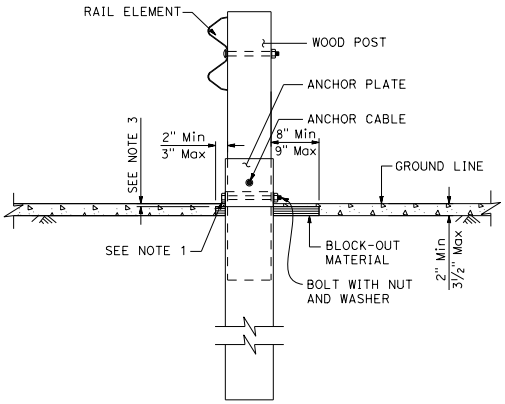

SECTION A-A

STATE OF CALIFORNIA
DEPARTMENT OF TRANSPORTATION

MINOR CONCRETE VEGETATION CONTROL GUARDRAIL SYSTEM MISCELLANEOUS DETAILS

NO SCALE

A77N11

2026 STANDARD PLAN A77N11

7-1-26

Return to Table of Contents

Dist	COUNTY	ROUTE	POST MILES TOTAL PROJECT	SHEET No.	TOTAL SHEETS

REGISTERED CIVIL ENGINEER

September 18, 2026

PLANS APPROVAL DATE

REGISTERED PROFESSIONAL ENGINEER Radhika Mothkuri No. C95984 Exp. 6-30-28 CIVIL STATE OF CALIFORNIA

THE STATE OF CALIFORNIA OR ITS OFFICERS OR AGENTS SHALL NOT BE RESPONSIBLE FOR THE ACCURACY OR COMPLETENESS OF SCANNED COPIES OF THIS PLAN SHEET.

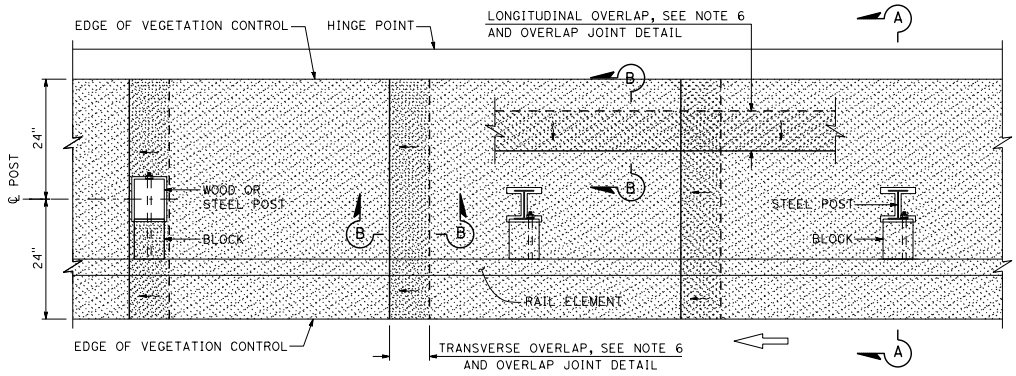

PLAN

NOTES:

1. Where dike is constructed under barrier, construct vegetation control to back edge of dike. Where paved shoulder is constructed within 24" of the post center, construct vegetation control to the edge of paved shoulder.
2. For wood and steel post sizes, see Standard Plans A77N1 and A77N2.
3. For MGS details not shown, see Standard Plans A77L1 and A77L2.
4. This plan for vegetation control installation only.
5. Vegetation control must slope in direction of water flow.
6. Place transverse and longitudinal overlap joint within the limits of vegetation control where applicable. No longitudinal overlap allowed in front of rail element on traffic side.
7. Caulk longitudinal and transverse edges of vegetation control mat where it abuts to paved surface or man-made fixed objects, except guardrail posts.
8. Where vegetation control is adjacent to a dike on a cut slope, and for typical line post application only, vegetation control may be flush with the top edge of dike and caulk at the joint.
9. For fiber mat, install post collar at all posts and caulk all edges.
10. Where the distance between center of post and hinge point is less than 30", construct vegetation control to 6" from the hinge point, with a minimum distance for vegetation control at back of post.

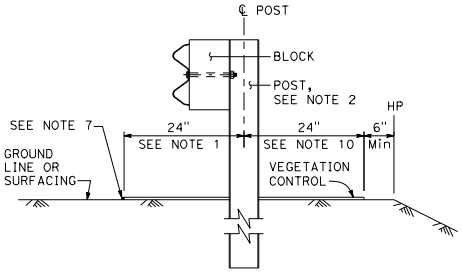

SECTION A-A

Without Existing Dike

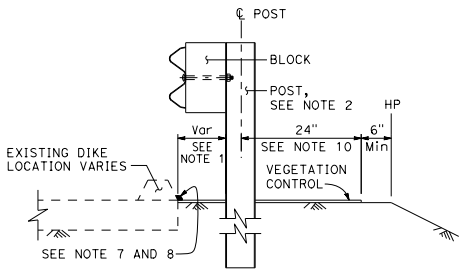

SECTION A-A

With Existing Dike

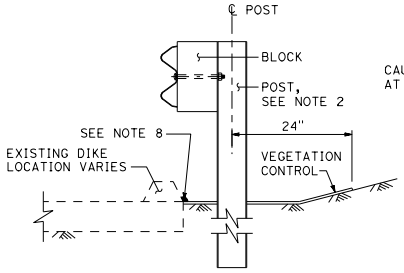

SECTION A-A

With Existing Dike
on cut slope

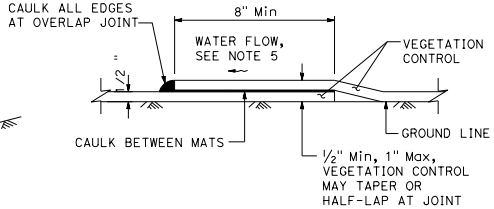

SECTION B-B

OVERLAP JOINT DETAIL

See Note 6

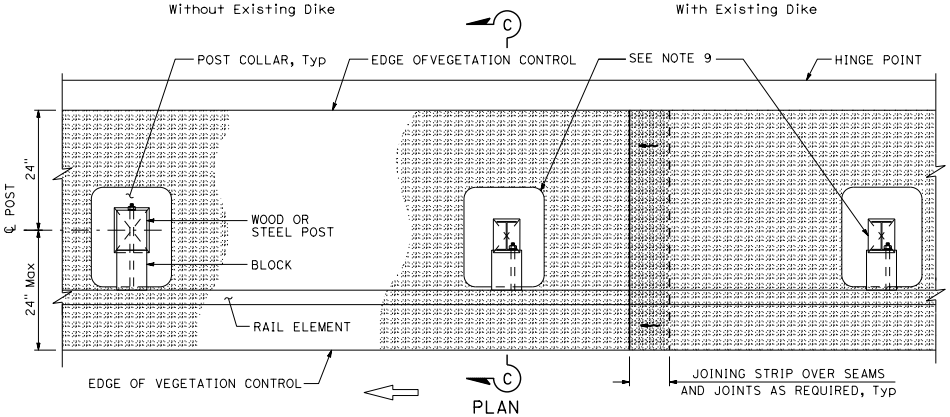

PLAN

FIBER VEGETATION CONTROL POST COLLAR DETAIL

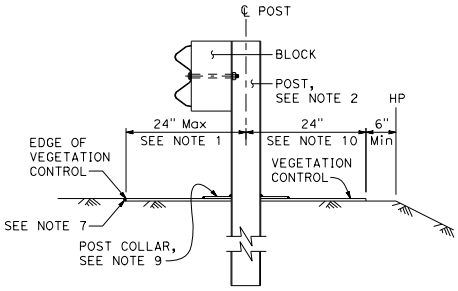

SECTION C-C

STATE OF CALIFORNIA
DEPARTMENT OF TRANSPORTATION

FIBER OR RUBBER MAT VEGETATION CONTROL GUARDRAIL SYSTEM

NO SCALE

A77N12

7-1-26

2026 STANDARD PLAN A77N12

Return to Table of Contents

Dist	COUNTY	ROUTE	POST MILES TOTAL PROJECT	SHEET No.	TOTAL SHEETS

REGISTERED CIVIL ENGINEER

September 18, 2026
PLANS APPROVAL DATE

REGISTERED PROFESSIONAL ENGINEER
Radhika Mothkuri
No. C95984
Exp. 6-30-28
CIVIL
STATE OF CALIFORNIA

THE STATE OF CALIFORNIA OR ITS OFFICERS OR AGENTS SHALL NOT BE RESPONSIBLE FOR THE ACCURACY OR COMPLETENESS OF SCANNED COPIES OF THIS PLAN SHEET.

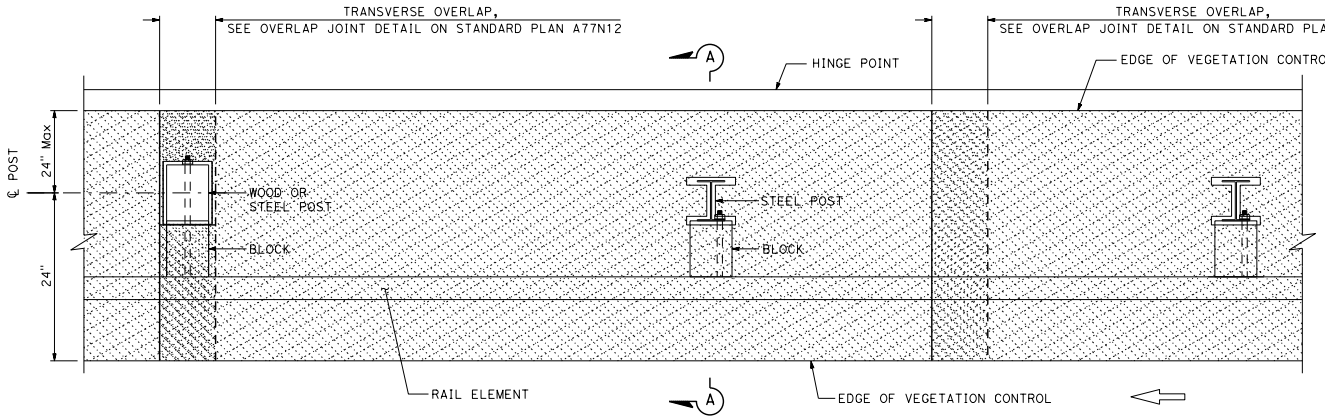

PLAN

NOTES:

1. For additional vegetation control details, see Standard Plan A77N12.
2. Where dike is constructed under barrier, construct vegetation control to back edge of dike. Where paved shoulder is constructed within 24" of the post center, construct vegetation control to the edge of paved shoulder.
3. For wood and steel post sizes, see Standard Plans A77N1 and A77N2.
4. For details not shown, see Standard Plans A77L1 and A77L2.
5. This plan for vegetation control installation only.
6. Vegetation control must slope in direction of water flow.
7. Place transverse and longitudinal overlap joint within the limits of vegetation control where applicable.
8. Caulk longitudinal and transverse edges of vegetation control mat where it abuts to paved surface or man-made fixed objects, except guardrail posts.
9. Where the distance between center of post and hinge point is 30" or less, construct vegetation control to 6" from the hinge point, with a minimum distance for vegetation control at back of post.

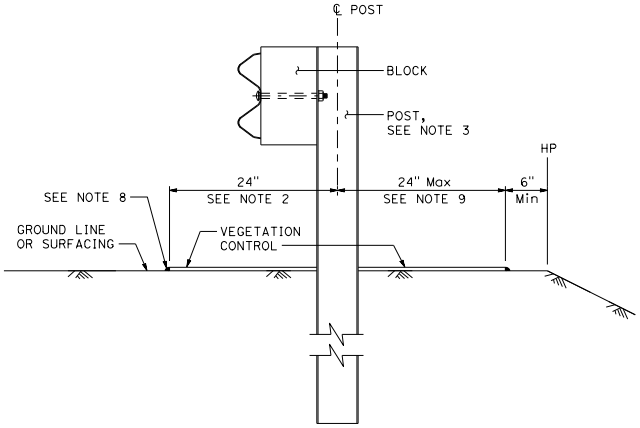

SECTION A-A

Without Existing Dike

STATE OF CALIFORNIA
DEPARTMENT OF TRANSPORTATION

FIBER OR RUBBER MAT VEGETATION CONTROL GUARDRAIL SYSTEM NARROW VEGETATION CONTROL INSTALLATION

NO SCALE

A77N13

2026 STANDARD PLAN A77N13

7-1-26

Return to Table of Contents

Dist	COUNTY	ROUTE	POST MILES TOTAL PROJECT	SHEET No.	TOTAL SHEETS

REGISTERED CIVIL ENGINEER

September 18, 2026
PLANS APPROVAL DATE

REGISTERED PROFESSIONAL ENGINEER
Radhika Mothkuri
No. C95984
Exp. 6-30-28
CIVIL
STATE OF CALIFORNIA

THE STATE OF CALIFORNIA OR ITS OFFICERS OR AGENTS SHALL NOT BE RESPONSIBLE FOR THE ACCURACY OR COMPLETENESS OF SCANNED COPIES OF THIS PLAN SHEET.

NOTES:

1. For additional vegetation control details, see Standard Plan A77N12.
2. Vegetation control must slope in direction of water flow.
3. This plan for vegetation control installation only.
4. Caulk longitudinal and transverse edges of vegetation control mat where it abuts to paved surface or man-made fixed objects, except guardrail posts.

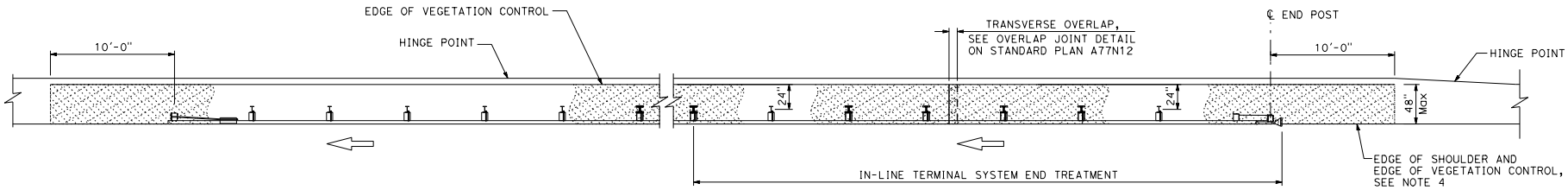

PLAN

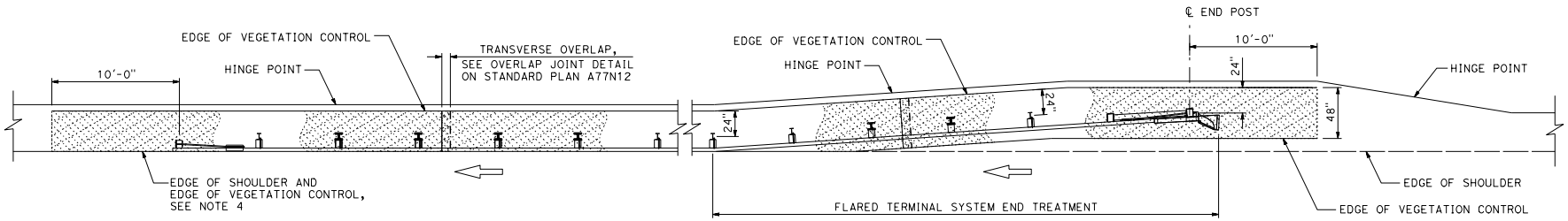

PLAN

STATE OF CALIFORNIA
DEPARTMENT OF TRANSPORTATION

FIBER OR RUBBER MAT VEGETATION CONTROL GUARDRAIL SYSTEM FOR TERMINAL SYSTEM END TREATMENTS

NO SCALE

A77N14

2026 STANDARD PLAN A77N14

7-1-26

Return to Table of Contents

Dist	COUNTY	ROUTE	POST MILES TOTAL PROJECT	SHEET No.	TOTAL SHEETS

REGISTERED CIVIL ENGINEER

September 18, 2026
PLANS APPROVAL DATE

REGISTERED PROFESSIONAL ENGINEER
Radhika Mothkuri
No. C95984
Exp. 6-30-28
CIVIL
STATE OF CALIFORNIA

THE STATE OF CALIFORNIA OR ITS OFFICERS OR AGENTS SHALL NOT BE RESPONSIBLE FOR THE ACCURACY OR COMPLETENESS OF SCANNED COPIES OF THIS PLAN SHEET.

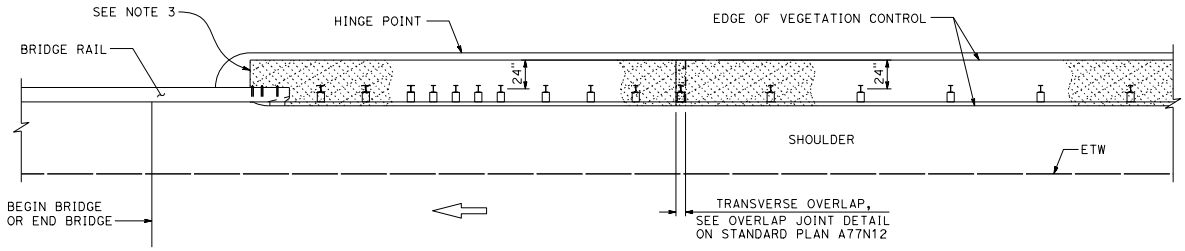

PLAN

NOTES:

1. For additional vegetation control details, see Standard Plan A77N12.
2. Where dike is constructed under barrier, construct vegetation control to back edge of dike. Where paved shoulder is constructed within 24" of the post center, construct vegetation control to the edge of paved shoulder.
3. End vegetation control at end of rail element.
4. Vegetation control must slope in direction of water flow.
5. This plan for vegetation control installation only.
6. Caulk longitudinal and transverse edges of vegetation control mat where it abuts to paved surface or man-made fixed objects, except guardrail posts.
7. Where vegetation control is adjacent to a dike, see details on Standard Plan A77N12.

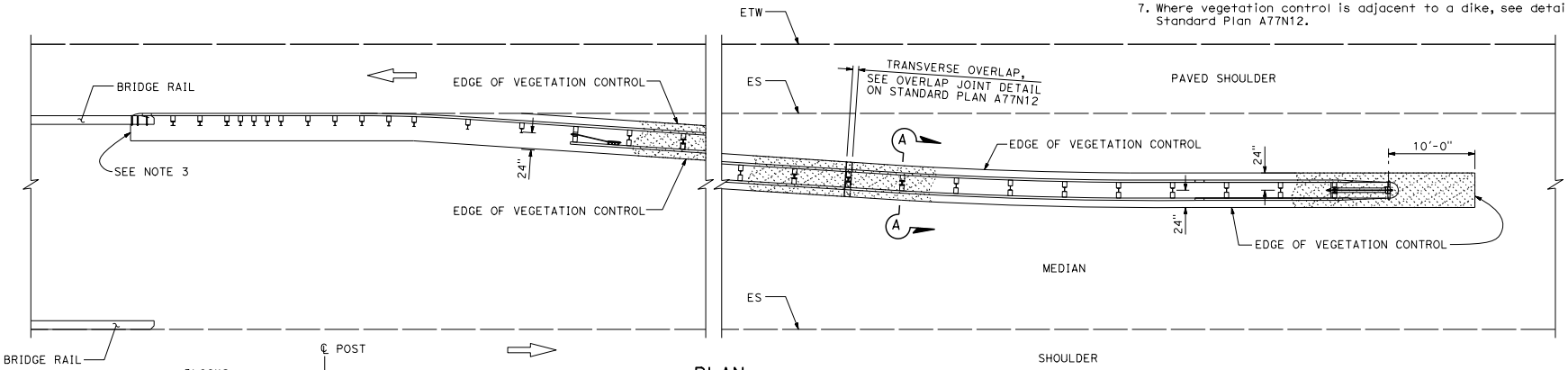

PLAN

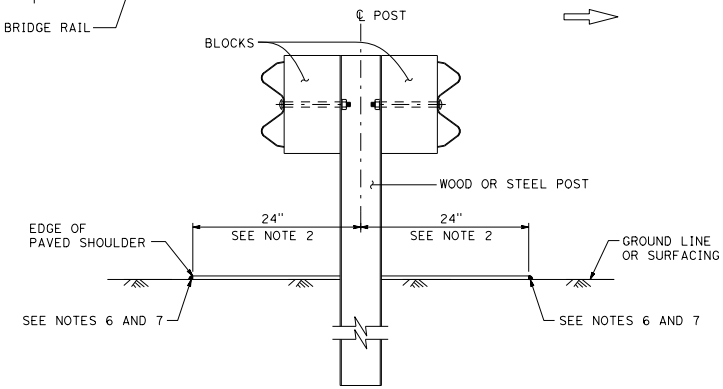

SECTION A-A

STATE OF CALIFORNIA
DEPARTMENT OF TRANSPORTATION

FIBER OR RUBBER MAT VEGETATION CONTROL GUARDRAIL SYSTEM AT STRUCTURE APPROACH

NO SCALE

A77N15

2026 STANDARD PLAN A77N15

7-1-26

Return to Table of Contents

Dist	COUNTY	ROUTE	POST MILES TOTAL PROJECT	SHEET No.	TOTAL SHEETS

REGISTERED CIVIL ENGINEER

September 18, 2026

PLANS APPROVAL DATE

REGISTERED PROFESSIONAL ENGINEER Radhika Mothkuri No. C95984 Exp. 6-30-28 CIVIL STATE OF CALIFORNIA

THE STATE OF CALIFORNIA OR ITS OFFICERS OR AGENTS SHALL NOT BE RESPONSIBLE FOR THE ACCURACY OR COMPLETENESS OF SCANNED COPIES OF THIS PLAN SHEET.

NOTES:

1. For additional vegetation control details, see Standard Plan A77N12.
2. Where paved shoulder is constructed within 24" of the post center, construct vegetation control to the edge of paved shoulder.
3. Vegetation control must slope in direction of water flow.
4. This plan is for vegetation control installation only. Where fixed objects are within 3'-0" from back of guardrail post, see Strengthened Midwest Guardrail System details on Standard Plan A77R1.
5. Caulk longitudinal and transverse edges of vegetation control mat where it abuts to paved surface or man-made fixed objects, except guardrail posts.

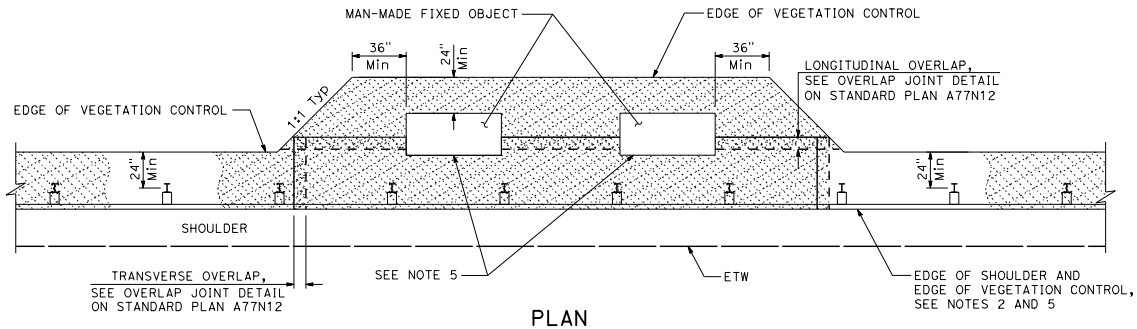

PLAN

Fixed object(s) on shoulder

STATE OF CALIFORNIA
DEPARTMENT OF TRANSPORTATION

FIBER OR RUBBER MAT VEGETATION CONTROL GUARDRAIL SYSTEM AT FIXED OBJECT

NO SCALE

A77N16

7-1-26

2026 STANDARD PLAN A77N16

Return to Table of Contents

Dist	COUNTY	ROUTE	POST MILES TOTAL PROJECT	SHEET No.	TOTAL SHEETS

REGISTERED CIVIL ENGINEER

September 18, 2026
PLANS APPROVAL DATE

REGISTERED PROFESSIONAL ENGINEER
Radhika Mothkuri
No. C95984
Exp. 6-30-28
CIVIL
STATE OF CALIFORNIA

THE STATE OF CALIFORNIA OR ITS OFFICERS OR AGENTS SHALL NOT BE RESPONSIBLE FOR THE ACCURACY OR COMPLETENESS OF SCANNED COPIES OF THIS PLAN SHEET.

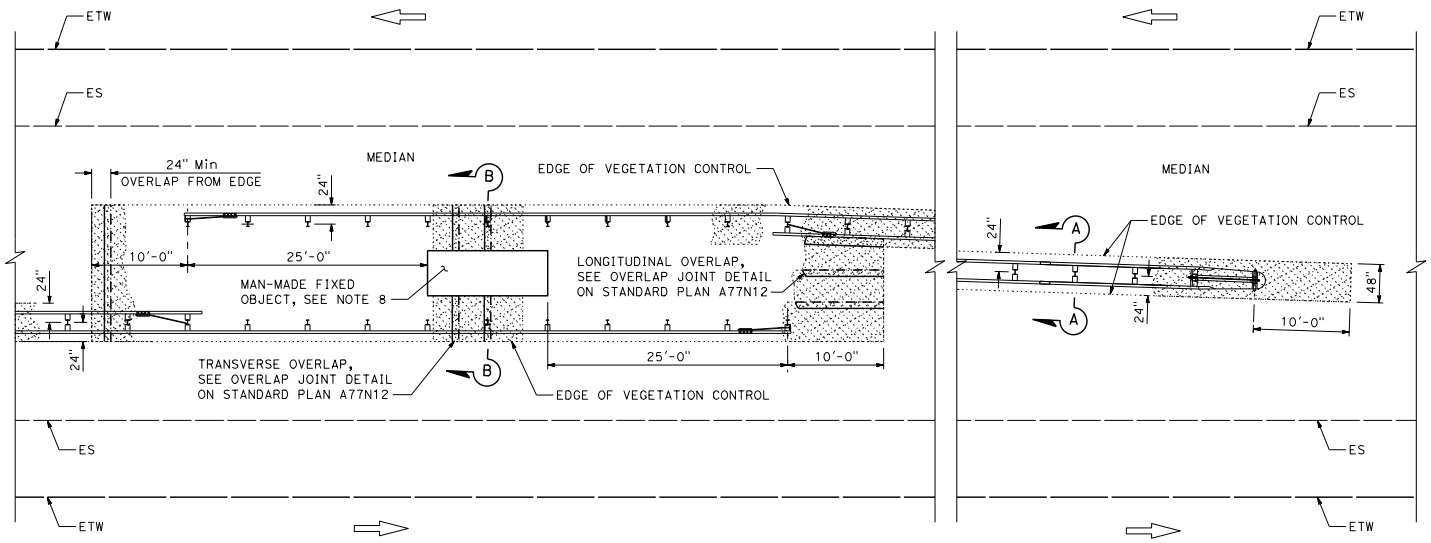

PLAN

Fixed object(s) in median

NOTES:

1. For additional vegetation control details, see Standard Plan A77N12.
2. Where dike is constructed under barrier, construct vegetation control to back edge of dike. Where paved shoulder is constructed within 24" of the post center, construct vegetation control to the edge of paved shoulder.
3. For wood and steel post sizes, see Standard Plans A77N1 and A77N2.
4. For details not shown, see Standard Plans A77L1 and A77L2.
5. This plan for vegetation control installation only.
6. Vegetation control must slope in direction of water flow.
7. Place transverse and longitudinal overlap joint within the limits of vegetation control where applicable.
8. Caulk longitudinal and transverse edges of vegetation control mat where it abuts to paved surface or man-made fixed objects, except guardrail posts.
9. Where vegetation control is adjacent to a dike, see details on Standard Plan A77N12.

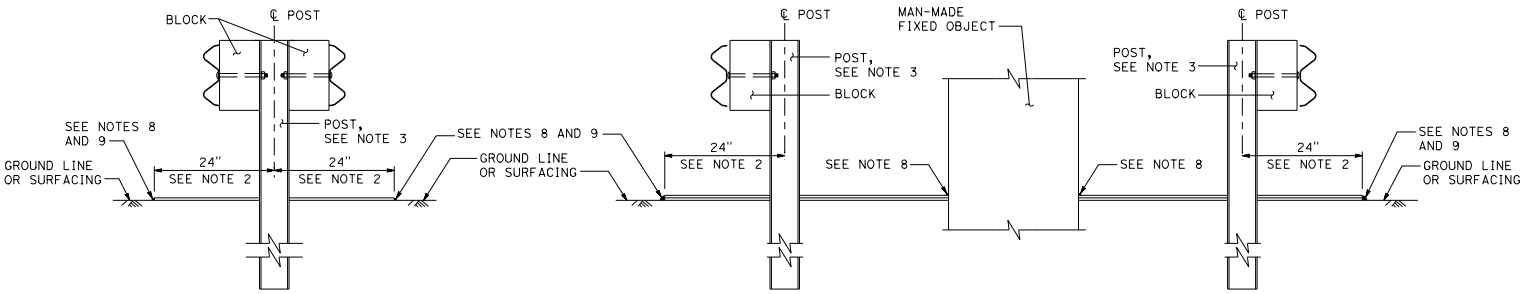

SECTION A-A

SECTION B-B

STATE OF CALIFORNIA
DEPARTMENT OF TRANSPORTATION

FIBER OR RUBBER MAT VEGETATION CONTROL GUARDRAIL SYSTEM AT FIXED OBJECT

NO SCALE

A77N17

2026 STANDARD PLAN A77N17

7-1-26

101

Return to Table of Contents

Dist	COUNTY	ROUTE	POST MILES TOTAL PROJECT	SHEET No.	TOTAL SHEETS

REGISTERED CIVIL ENGINEER

September 18, 2026

PLANS APPROVAL DATE

REGISTERED PROFESSIONAL ENGINEER Radhika Mothkuri No. C95984 Exp. 6-30-28 CIVIL STATE OF CALIFORNIA

THE STATE OF CALIFORNIA OR ITS OFFICERS OR AGENTS SHALL NOT BE RESPONSIBLE FOR THE ACCURACY OR COMPLETENESS OF SCANNED COPIES OF THIS PLAN SHEET.

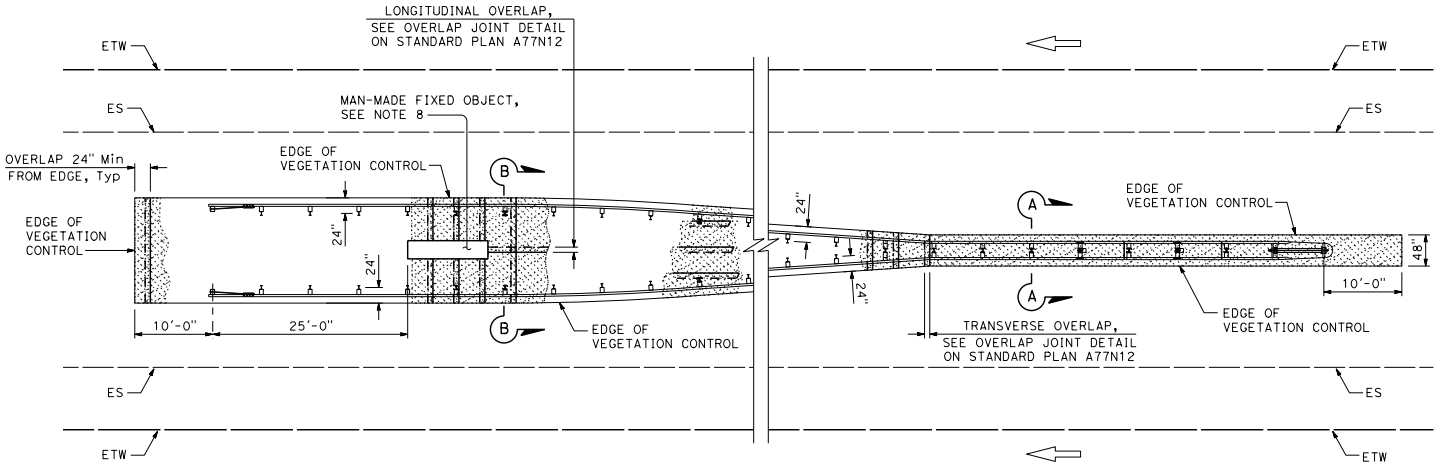

PLAN

Fixed object(s) between separate roadbeds
(One-way Traffic)

NOTES:

1. For additional vegetation control details, see Standard Plan A77N12.
2. Where dike is constructed under barrier, construct vegetation control to back edge of dike. Where paved shoulder is constructed within 24" of the post center, construct vegetation control to the edge of paved shoulder.
3. For wood and steel post sizes, see Standard Plans A77N1 and A77N2.
4. For details not shown, see Standard Plans A77L1 and A77L2.
5. This plan for vegetation control installation only.
6. Vegetation control must slope in direction of water flow.
7. Place transverse and longitudinal overlap joint within the limits of vegetation control where applicable.
8. Caulk longitudinal and transverse edges of vegetation control mat where it abuts to paved surface or man-made fixed objects, except guardrail posts.
9. Where vegetation control is adjacent to a dike, see Standard Plan A77N12.

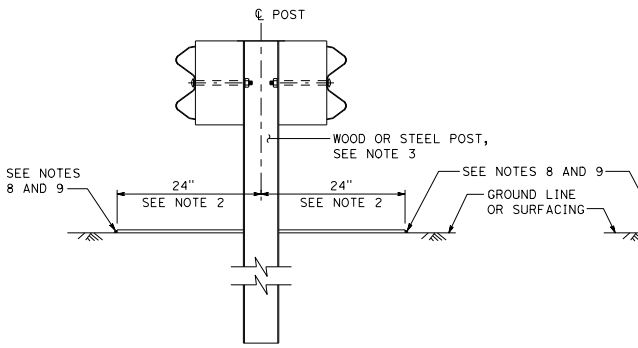

SECTION A-A

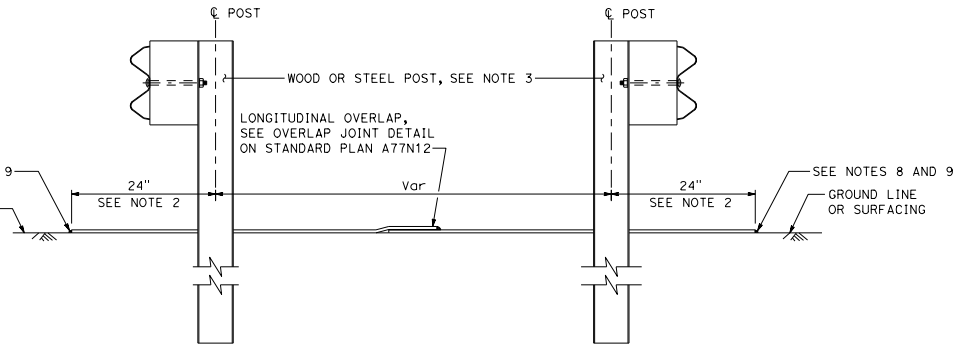

SECTION B-B

STATE OF CALIFORNIA
DEPARTMENT OF TRANSPORTATION

FIBER OR RUBBER MAT VEGETATION CONTROL GUARDRAIL SYSTEM AT FIXED OBJECT

NO SCALE

A77N18

2026 STANDARD PLAN A77N18

7-1-26

Return to Table of Contents

Dist	COUNTY	ROUTE	POST MILES TOTAL PROJECT	SHEET No.	TOTAL SHEETS

Jawad Naderi
REGISTERED CIVIL ENGINEER

September 18, 2026
PLANS APPROVAL DATE

REGISTERED PROFESSIONAL ENGINEER Mohammad Jawad Naderi No. C96340 Exp. 9-30-26 CIVIL STATE OF CALIFORNIA

THE STATE OF CALIFORNIA OR ITS OFFICERS OR AGENTS SHALL NOT BE RESPONSIBLE FOR THE ACCURACY OR COMPLETENESS OF SCANNED COPIES OF THIS PLAN SHEET.

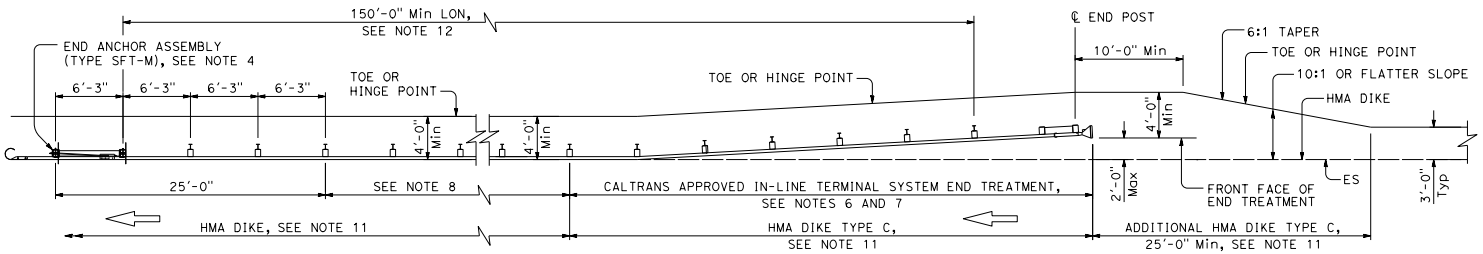

TYPE 11A LAYOUT

(Embankment MGS installation with in-line end treatment at traffic approach end of railing), see Note 5.

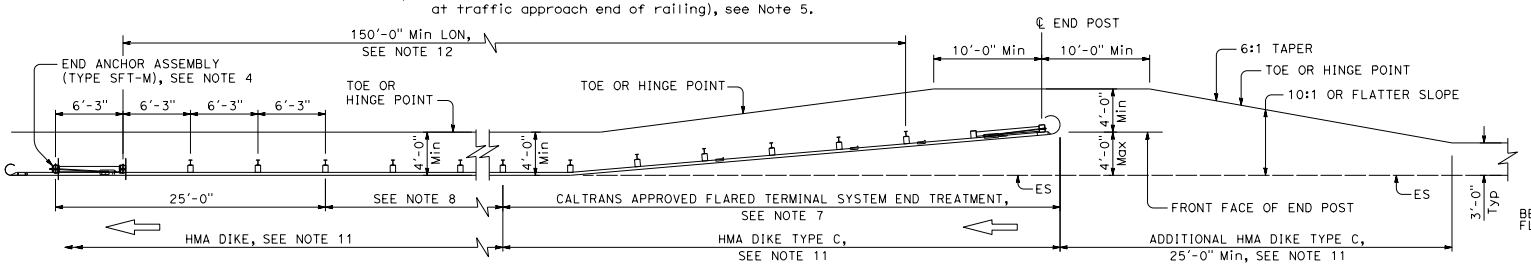

TYPE 11B LAYOUT

(Embankment MGS installation with flared end treatment at traffic approach end of railing), see Note 5.

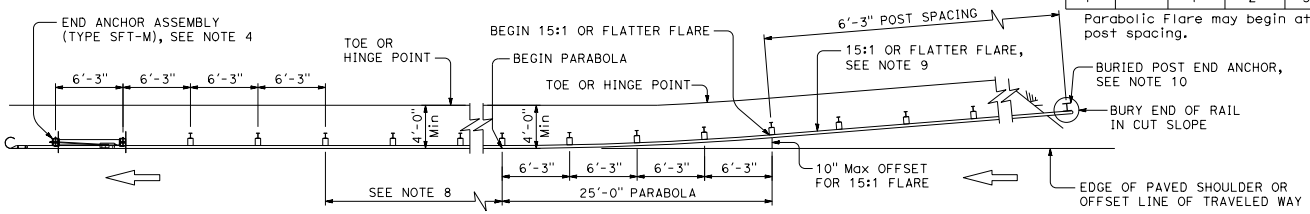

TYPE 11C LAYOUT

(Embankment MGS installation with buried end anchor treatment at traffic approach end of railing), see Notes 5, 11, and 12.

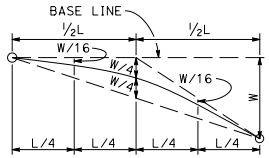

TYPICAL PARABOLIC LAYOUT

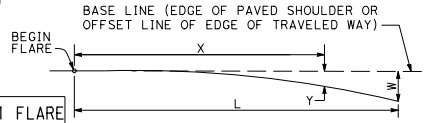

PARABOLIC FLARE OFFSETS FOR CONNECTION TO 15:1 FLARE								
X=	0.0'	6.25'	9.375'	12.5'	15.625'	18.75'	21.875'	25.00'
Y=	-	1"	2"	3"	4"	6"	8"	10"

Parabolic Flare may begin at full post spacing or at half post spacing.

$$Y = \frac{WX^2}{L^2}$$

Y = OFFSET FROM BASE LINE
W = MAXIMUM OFFSET
X = DISTANCE ALONG BASE LINE
L = LENGTH OF FLARE

PARABOLIC FLARE OFFSETS

For connection to flare other than 15:1

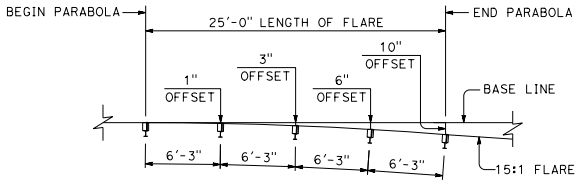

TYPICAL FLARE OFFSETS

For connection to 15:1 flare

NOTES:

1. Line post, blocks and hardware to be used are shown on Standard Plans A77L1, A77L2, A77M1, A77N1, and A77N2.
2. MGS post spacing to be 6'-3" center to center, except as otherwise noted.
3. Except as noted, line posts are 6'-0" long Steel W6 x 9 or W6 x 8.5 with blocks, or 6" x 8" x 6'-0" wood with blocks.
4. For End Anchor Assembly (Type SFT-M) details, see Standard Plan A77S1.
5. Layout Types 11A, 11B or 11C are typically used where MGS is recommended to shield embankment slopes and a crashworthy end treatment is required for one direction of traffic.
6. Flare the end of the in-line terminal system end treatments where site conditions will accommodate. Max flare rate is 25:1 unless specified by manufacturer.
7. The type of terminal system end treatment to be used will be shown on the Project Plans.
8. Dependent on site conditions (embankment height and side slope), construction of additional MGS (length equal to multiples of 12'-6" with 6'-3" post spacing) may be advisable.
9. The 15:1 or flatter flare used is based on the edge of the paved shoulder or offset line of edge of the traveled way.
10. For details of the buried post end anchor used with Type 11C Layout, see Standard Plans A77T2 and A77T3.
11. Where placement of dike is required with MGS installations, see Standard Plan A77N4 for dike positioning details.
12. A minimum of 150'-0" of MGS is needed to develop Length of Need (LON). Shorter LON is acceptable when buried post end anchors are used.

STATE OF CALIFORNIA
DEPARTMENT OF TRANSPORTATION

MIDWEST GUARDRAIL SYSTEM TYPICAL LAYOUTS FOR EMBANKMENTS

NO SCALE

A77P1

2026 STANDARD PLAN A77P1

7-1-26

Return to Table of Contents

Dist	COUNTY	ROUTE	POST MILES TOTAL PROJECT	SHEET No.	TOTAL SHEETS

Jawad Naderi
REGISTERED CIVIL ENGINEER

September 18, 2026
PLANS APPROVAL DATE

REGISTERED PROFESSIONAL ENGINEER
Mohammad Jawad Naderi
No. C96340
Exp. 9-30-26
CIVIL
STATE OF CALIFORNIA

THE STATE OF CALIFORNIA OR ITS OFFICERS OR AGENTS SHALL NOT BE RESPONSIBLE FOR THE ACCURACY OR COMPLETENESS OF SCANNED COPIES OF THIS PLAN SHEET.

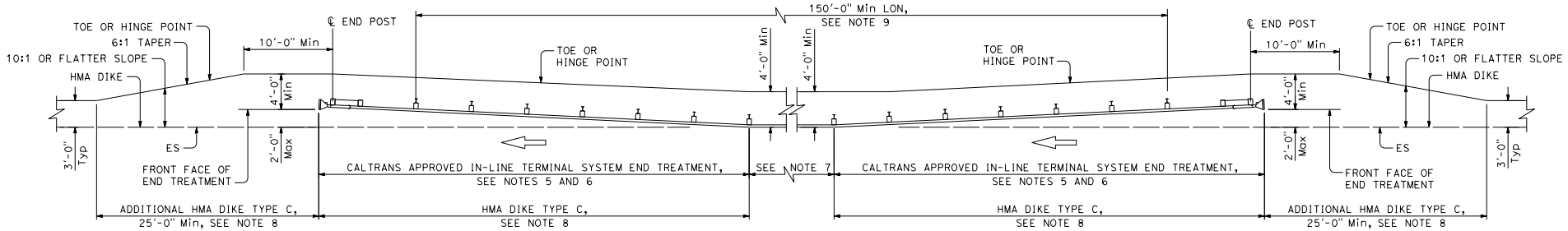

TYPE 11D LAYOUT

(Embankment MGS installation with in-line end treatment at each end of railing)
See Note 4

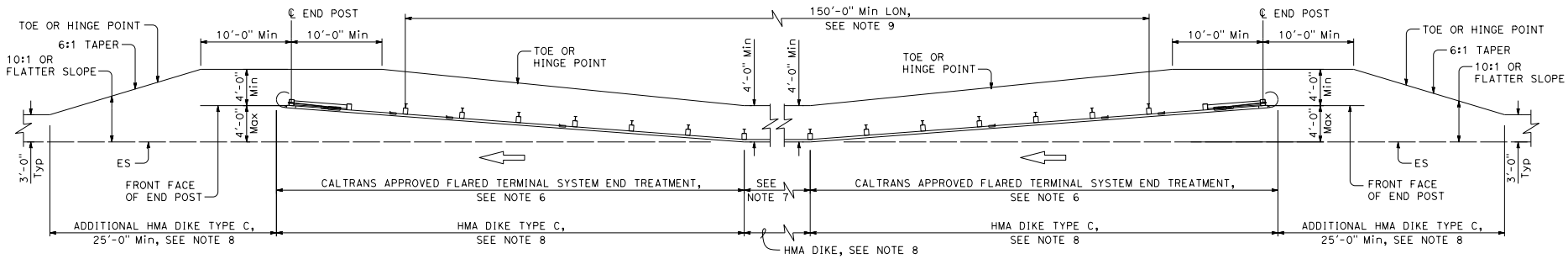

TYPE 11E LAYOUT

(Embankment MGS installation with flared end treatment at each end of railing)
See Note 4

NOTES:

1. Line post, blocks and hardware to be used are shown on Standard Plans A77L1, A77L2, A77M1, A77N1, and A77N2.
2. MGS post spacing to be 6'-3" center to center, except as otherwise noted.
3. Except as noted, line posts are 6'-0" long Steel W6 x 9 or W6 x 8.5 with blocks, or 6" x 8" x 6'-0" wood with blocks.
4. Layout Types 11D through 11L, shown on the Standard Plans A77P Series, are typically used where MGS is recommended to shield embankment slopes and a crashworthy end treatment is required for both directions of traffic.
5. Flare the end of the in-line terminal system end treatment where site conditions will accommodate.
6. The type of terminal system end treatment to be used will be shown on the Project Plans.
7. Dependent on site conditions (embankment height and side slope), construction of additional MGS (length equal to multiples of 12'-6" with 6'-3" post spacing) may be advisable.
8. Where placement of dike is required with MGS installations, see Standard Plan A77N4 for dike positioning details.
9. A minimum of 150'-0" of MGS is needed to develop Length of Need (LON).

STATE OF CALIFORNIA
DEPARTMENT OF TRANSPORTATION

MIDWEST GUARDRAIL SYSTEM TYPICAL LAYOUTS FOR EMBANKMENTS

NO SCALE

A77P2

7-1-26

2026 STANDARD PLAN A77P2

Return to Table of Contents

Dist	COUNTY	ROUTE	POST MILES TOTAL PROJECT	SHEET No.	TOTAL SHEETS

Jawad Naderi
REGISTERED CIVIL ENGINEER

September 18, 2026
PLANS APPROVAL DATE

REGISTERED PROFESSIONAL ENGINEER
Mohammad Jawad Naderi
No. C96340
Exp. 9-30-26
CIVIL
STATE OF CALIFORNIA

THE STATE OF CALIFORNIA OR ITS OFFICERS OR AGENTS SHALL NOT BE RESPONSIBLE FOR THE ACCURACY OR COMPLETENESS OF SCANNED COPIES OF THIS PLAN SHEET.

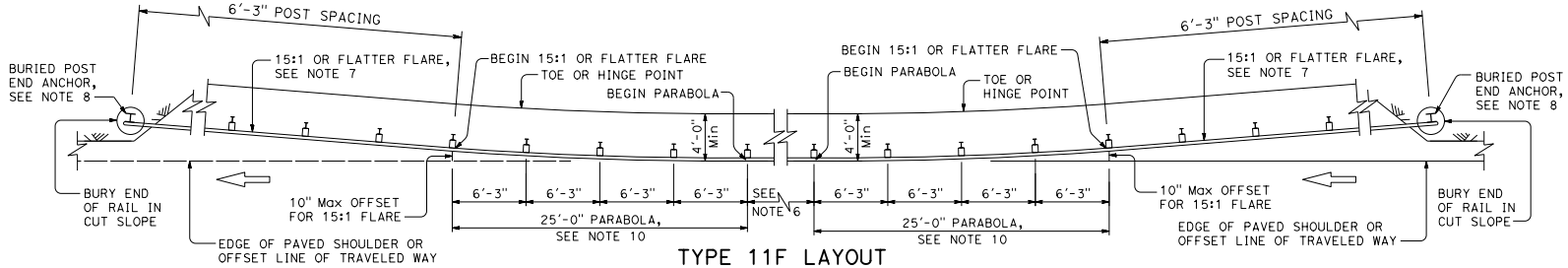

TYPE 11F LAYOUT

(Embankment MGS installation with a buried end anchor treatment at each end of railing)
See Notes 4, 9, and 11

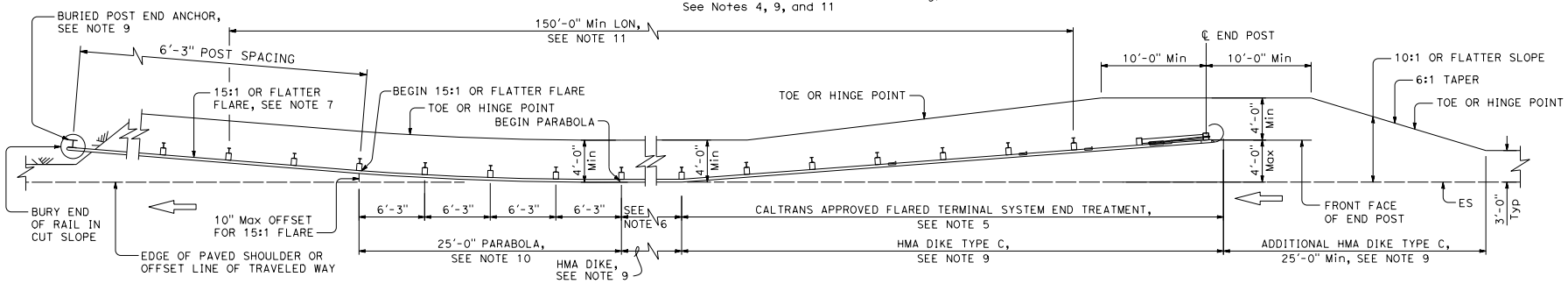

TYPE 11G LAYOUT

(Embankment MGS installation with flared end treatment and a buried end anchor treatment at the ends of railing)
See Notes 4 and 9

NOTES:

1. Line post, blocks and hardware to be used are shown on Standard Plans A77L1, A77L2, A77M1, A77N1, and A77N2.
2. MGS post spacing to be 6'-3" center to center, except as otherwise noted.
3. Except as noted, line posts are 6'-0" long Steel W6 x 9 or W6 x 8.5 with blocks, or 6" x 8" x 6'-0" wood with blocks.
4. Layout Types 11D through 11L, shown on the Standard Plans A77P Series, are typically used where MGS is recommended to shield embankment slopes and a crashworthy end treatment is required for both directions of traffic.
5. The type of terminal system end treatment to be used will be shown on the Project Plans.
6. Dependent on site conditions (embankment height and side slope), construction of additional MGS (length equal to multiples of 12'-6" with 6'-3" post spacing) may be advisable.
7. The 15:1 or flatter flare is based on the edge of the paved shoulder or offset line of edge of the traveled way. The length of MGS within the 15:1 or flatter flare is based on site conditions and should be a length equal to multiples of 12'-6".
8. For details of the buried post end anchor used with Type 11F and 11G Layouts, see Standard Plans A77T2 and A77T3.
9. Where placement of dike is required with MGS installations, see Standard Plan A77N4 for dike positioning details.
10. For typical flare offsets for 25'-0" length parabola with maximum offset of 10", see Standard Plan A77P1.
11. A minimum of 150'-0" of MGS is needed to develop Length of Need (LON). 150'-0" minimum LON may not be necessary for use when both ends are buried post end anchor.

STATE OF CALIFORNIA
DEPARTMENT OF TRANSPORTATION

MIDWEST GUARDRAIL SYSTEM TYPICAL LAYOUTS FOR EMBANKMENTS

NO SCALE

A77P3

7-1-26

2026 STANDARD PLAN A77P3

Return to Table of Contents

Dist	COUNTY	ROUTE	POST MILES TOTAL PROJECT	SHEET No.	TOTAL SHEETS

Jawad Naderi
REGISTERED CIVIL ENGINEER

September 18, 2026
PLANS APPROVAL DATE

REGISTERED PROFESSIONAL ENGINEER
Mohammad Jawad Naderi
No. C96340
Exp. 9-30-26
CIVIL
STATE OF CALIFORNIA

THE STATE OF CALIFORNIA OR ITS OFFICERS OR AGENTS SHALL NOT BE RESPONSIBLE FOR THE ACCURACY OR COMPLETENESS OF SCANNED COPIES OF THIS PLAN SHEET.

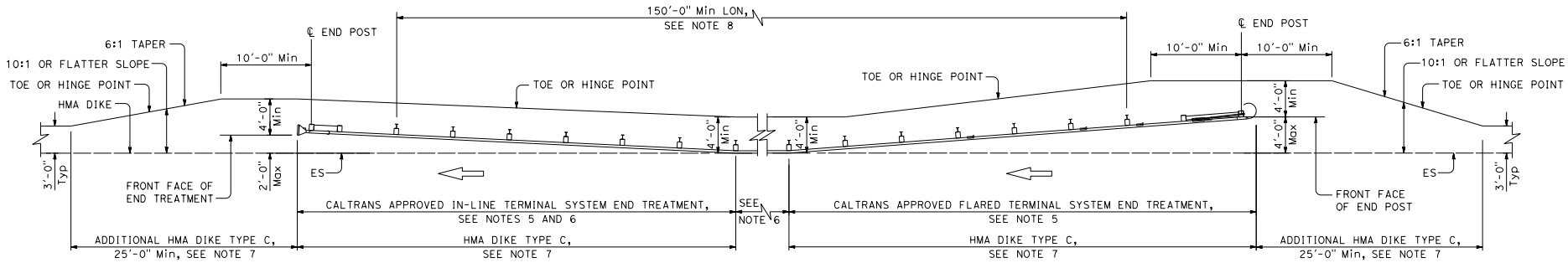

TYPE 11H LAYOUT

(Embankment MGS installation with flared end treatment
and in-line end treatment at the ends of railing)
See Notes 4 and 7

NOTES:

1. Line post, blocks and hardware to be used are shown on Standard Plans A77L1, A77L2, A77M1, A77N1, and A77N2.
2. MGS post spacing to be 6'-3" center to center, except as otherwise noted.
3. Except as noted, line posts are 6'-0" long Steel W6 x 9 or W6 x 8.5 with blocks, or 6" x 8" x 6'-0" wood with blocks.
4. Layout Types 11D through 11L, shown on the Standard Plans A77P Series, are typically used where MGS is recommended to shield embankment slopes and a crashworthy end treatment is required for both directions of traffic.
5. The type of terminal system end treatment to be used will be shown on the Project Plans.
6. Dependent on site conditions (embankment height and side slope), construction of additional MGS (length equal to multiples of 12'-6" with 6'-3" post spacing) may be advisable.
7. Where placement of dike is required with MGS installations, see Standard Plan A77N4 for dike positioning details.
8. A minimum of 150'-0" of MGS is needed to develop Length of Need (LON).

STATE OF CALIFORNIA
DEPARTMENT OF TRANSPORTATION

MIDWEST GUARDRAIL SYSTEM TYPICAL LAYOUTS FOR EMBANKMENTS

NO SCALE

A77P4

7-1-26

2026 STANDARD PLAN A77P4

Return to Table of Contents

Dist	COUNTY	ROUTE	POST MILES TOTAL PROJECT	SHEET No.	TOTAL SHEETS

Jawad Naderi
REGISTERED CIVIL ENGINEER

September 18, 2026
PLANS APPROVAL DATE

REGISTERED PROFESSIONAL ENGINEER
Mohammad Jawad Naderi
No. C96340
Exp. 9-30-26
CIVIL
STATE OF CALIFORNIA

THE STATE OF CALIFORNIA OR ITS OFFICERS OR AGENTS SHALL NOT BE RESPONSIBLE FOR THE ACCURACY OR COMPLETENESS OF SCANNED COPIES OF THIS PLAN SHEET.

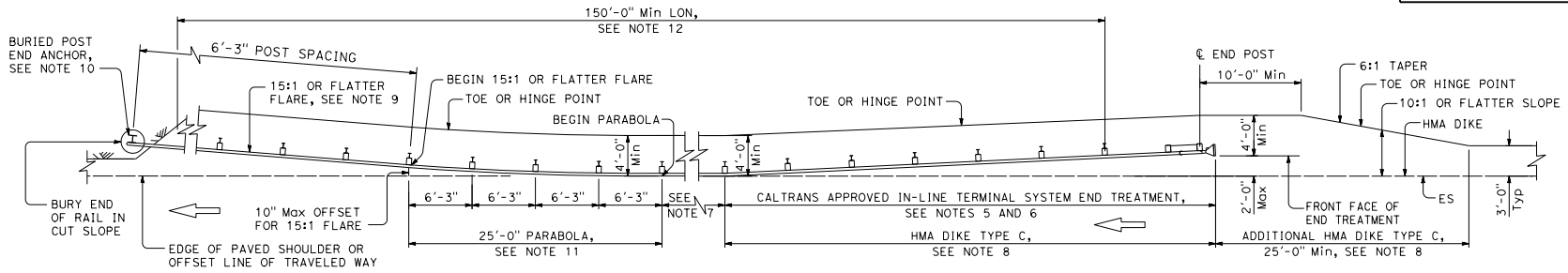

TYPE 11I LAYOUT

(Embankment MGS installation with in-line end treatment and a buried end anchor treatment at the ends of railing)
See Note 4

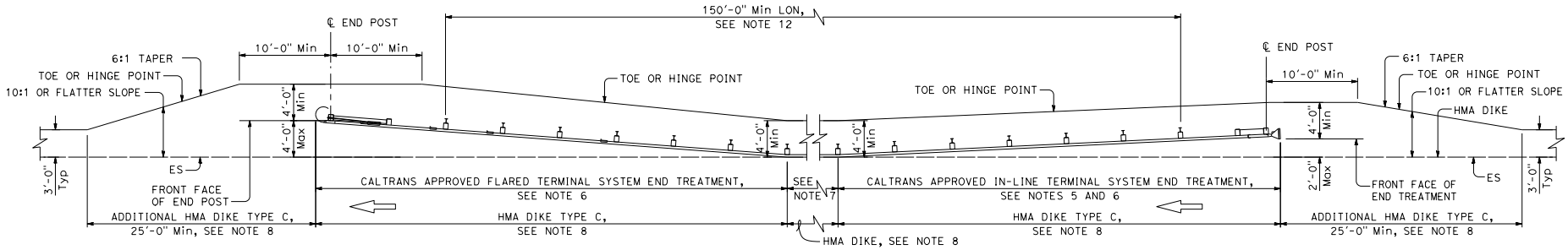

TYPE 11J LAYOUT

(Embankment MGS installation with in-line end treatment and flared end treatment at the ends of railing)
See Note 4

NOTES:

1. Line post, blocks and hardware to be used are shown on Standard Plans A77L1, A77L2, A77M1, A77N1, and A77N2.
2. MGS post spacing to be 6'-3" center to center, except as otherwise noted.
3. Except as noted, line posts are 6'-0" long Steel W6 x 9 or W6 x 8.5 with blocks, or 6" x 8" x 6'-0" wood with blocks.
4. Layout Types 11D through 11L, shown on the Standard Plans A77P Series, are typically used where MGS is recommended to shield embankment slopes and a crashworthy end treatment is required for both directions of traffic.
5. Flare the end of the in-line terminal system end treatment where site conditions accommodate.
6. The type of terminal system end treatment to be used will be shown on the Project Plans.
7. Dependent on site conditions (embankment height and side slope), construction of additional MGS (length equal to multiples of 12'-6" with 6'-3" post spacing) may be advisable.
8. Where placement of dike is required with MGS installations, see Standard Plan A77N4 for dike positioning details.
9. The 15:1 or flatter flare is based on the edge of the paved shoulder or offset line of edge of the traveled way. The length of MGS within the 15:1 or flatter flare is based on site conditions and should be a length equal to multiples of 12'-6".
10. For details of the buried post end anchor used with Type 11I Layout, see Standard Plans A77T2 and A77T3.
11. For typical flare offsets for 25'-0" length parabola with maximum offset of 10", see Standard Plan A77P1.
12. A minimum of 150'-0" of MGS is needed to develop Length of Need (LON).

STATE OF CALIFORNIA
DEPARTMENT OF TRANSPORTATION

MIDWEST GUARDRAIL SYSTEM TYPICAL LAYOUTS FOR EMBANKMENTS

NO SCALE

A77P5

2026 STANDARD PLAN A77P5

7-1-26

Return to Table of Contents

Dist	COUNTY	ROUTE	POST MILES TOTAL PROJECT	SHEET No.	TOTAL SHEETS

Jawad Naderi
REGISTERED CIVIL ENGINEER

September 18, 2026
PLANS APPROVAL DATE

REGISTERED PROFESSIONAL ENGINEER
Mohammad Jawad Naderi
No. C96340
Exp. 9-30-26
CIVIL
STATE OF CALIFORNIA

THE STATE OF CALIFORNIA OR ITS OFFICERS OR AGENTS SHALL NOT BE RESPONSIBLE FOR THE ACCURACY OR COMPLETENESS OF SCANNED COPIES OF THIS PLAN SHEET.

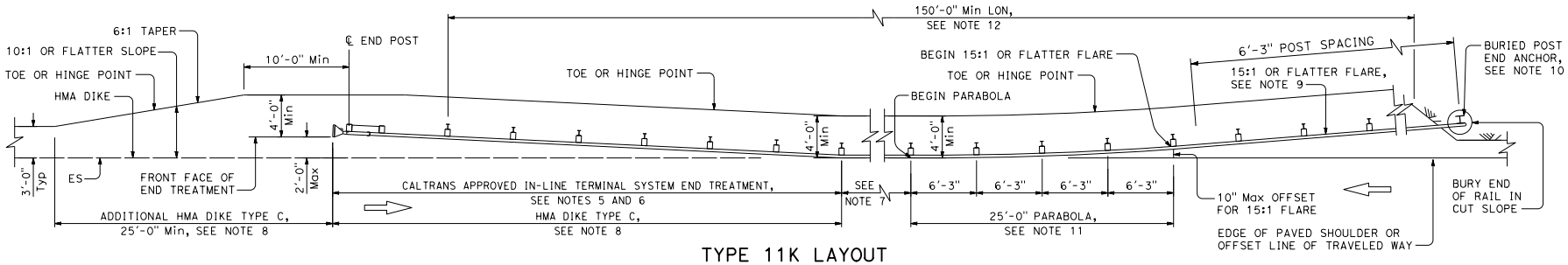

TYPE 11K LAYOUT

(Embankment MGS installation with a buried end anchor treatment and an in-line end treatment at the ends of railing)
See Note 4

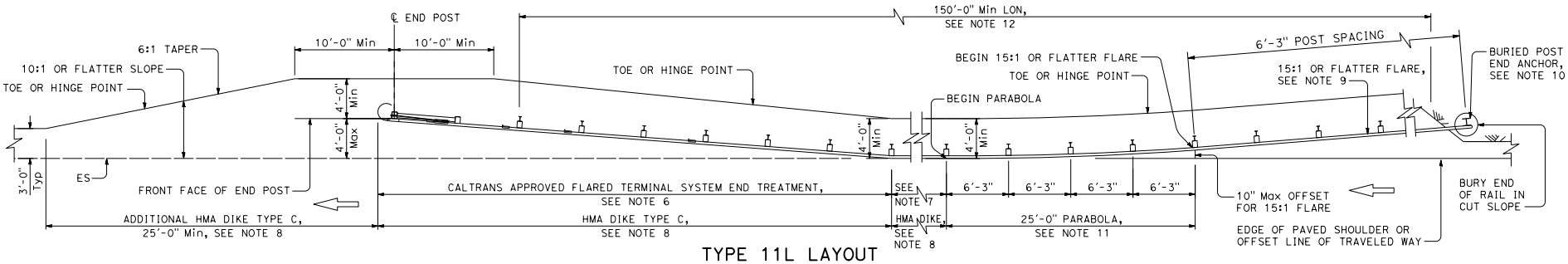

TYPE 11L LAYOUT

(Embankment MGS installation with a buried end anchor treatment and a flared end treatment at the ends of railing)
See Note 4

NOTES:

1. Line post, blocks and hardware to be used are shown on Standard Plans A77L1, A77L2, A77M1, A77N1, and A77N2.
2. MGS post spacing to be 6'-3" center to center, except as otherwise noted.
3. Except as noted, line posts are 6'-0" long Steel W6 x 9 or W6 x 8.5 with blocks, or 6" x 8" x 6'-0" wood with blocks.
4. Layout Types 11D through 11L, shown on the Standard Plans A77P Series, are typically used where MGS is recommended to shield embankment slopes and a crashworthy end treatment is required for both directions of traffic.
5. Flare the end of the in-line terminal system end treatment where site conditions will accommodate.
6. The type of terminal system end treatment to be used will be shown on the Project Plans.
7. Dependent on site conditions (embankment height and side slope), construction of additional MGS (length equal to multiples of 12'-6" with 6'-3" post spacing) may be advisable.
8. Where placement of dike is required with MGS installations, see Standard Plan A77N4 for dike positioning details.
9. The 15:1 or flatter flare is based on the edge of the paved shoulder or offset line of edge of the traveled way. The length of MGS within the 15:1 or flatter flare is based on site conditions and should be a length equal to multiples of 12'-6".
10. For details of the buried post end anchor used with Type 11K and 11L Layouts, see Standard Plans A77T2 and A77T3.
11. For typical flare offsets for 25'-0" length parabola with maximum offset of 10", see Standard Plan A77P1.
12. A minimum of 150'-0" of MGS is needed to develop Length of Need (LON).

STATE OF CALIFORNIA
DEPARTMENT OF TRANSPORTATION

MIDWEST GUARDRAIL SYSTEM TYPICAL LAYOUTS FOR EMBANKMENTS

NO SCALE

A77P6

2026 STANDARD PLAN A77P6

7-1-26

Return to Table of Contents

Dist	COUNTY	ROUTE	POST MILES TOTAL PROJECT	SHEET No.	TOTAL SHEETS

Jawad Naderi
REGISTERED CIVIL ENGINEER

September 18, 2026
PLANS APPROVAL DATE

REGISTERED PROFESSIONAL ENGINEER
Mohammad Jawad Naderi
No. C96340
Exp. 9-30-26
CIVIL
STATE OF CALIFORNIA

THE STATE OF CALIFORNIA OR ITS OFFICERS OR AGENTS SHALL NOT BE RESPONSIBLE FOR THE ACCURACY OR COMPLETENESS OF SCANNED COPIES OF THIS PLAN SHEET.

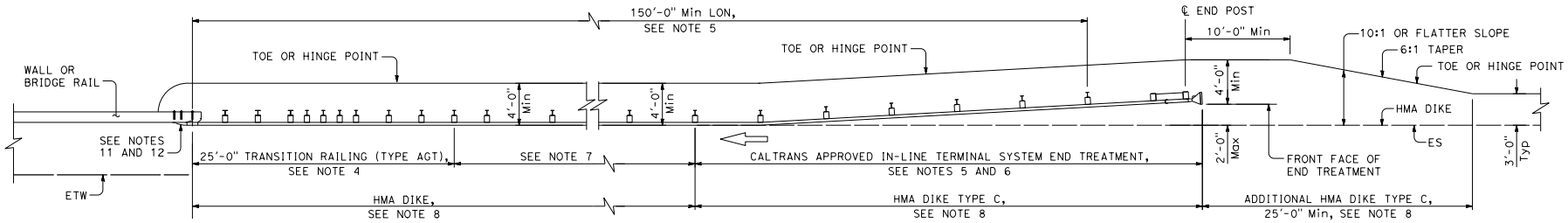

TYPE 12A LAYOUT

(MGS installation at structure approach with
In-line end treatment at traffic approach end of railing), see Note 9.

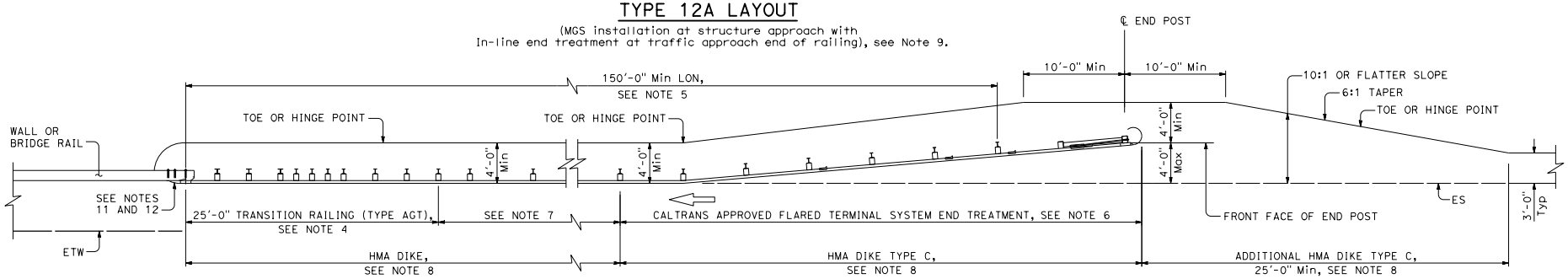

TYPE 12B LAYOUT

(MGS installation at structure approach with
Flared end treatment at traffic approach end of railing), see Note 9.

NOTES:

1. Line post, blocks and hardware to be used are shown on Standard Plans A77L1, A77L2, A77M1, A77N1, and A77N2.
2. MGS post spacing to be 6'-3" center to center, except as otherwise noted.
3. Except as noted, line posts are 6'-0" long Steel W6 x 9 or W6 x 8.5 with blocks, or 6" x 8" x 6'-0" wood with blocks.
4. For Transition Railing (Type AGT) details for Types 12A and 12B Layouts, see Standard Plans A79 Series.
5. A minimum of 150'-0" of MGS is needed to develop Length of Need (LON).
6. The type of terminal system end treatment to be used will be shown on the Project Plans.
7. Dependent on site conditions (embankment height, side slopes or other fixed objects), it may be advisable to construct additional guard railing (a length equal to multiples of 12'-6" with 6'-3" post spacing) between the transition railing and end treatment.
8. Where placement of dike is required with guard railing installations, see Standard Plan A77N4 for dike positioning details.
9. Type 12A or Type 12B Layouts are typically used at the approach end of a structure, to the right or left on two-lane conventional highway where the roadbed width across the structure is 40 feet or less.
10. See Standard Plan A77Q3 for typical layout used left of approaching traffic at the ends of each structure on multilane freeways or expressways with separate adjacent or parallel bridges.
11. For additional details of typical connections to bridge rail, see Standard Plans A79 series.
12. For additional details of a typical connection to walls or abutments, see Standard Plans A79C1 and A79C2.

STATE OF CALIFORNIA
DEPARTMENT OF TRANSPORTATION

MIDWEST GUARDRAIL SYSTEM TYPICAL LAYOUTS FOR STRUCTURE APPROACH

NO SCALE

A77Q1

7-1-26

2026 STANDARD PLAN A77Q1

Return to Table of Contents

Dist	COUNTY	ROUTE	POST MILES TOTAL PROJECT	SHEET No.	TOTAL SHEETS

Jawad Naderi
REGISTERED CIVIL ENGINEER

September 18, 2026
PLANS APPROVAL DATE

REGISTERED PROFESSIONAL ENGINEER
Mohammad Jawad Naderi
No. C96340
Exp. 9-30-26
CIVIL
STATE OF CALIFORNIA

THE STATE OF CALIFORNIA OR ITS OFFICERS OR AGENTS SHALL NOT BE RESPONSIBLE FOR THE ACCURACY OR COMPLETENESS OF SCANNED COPIES OF THIS PLAN SHEET.

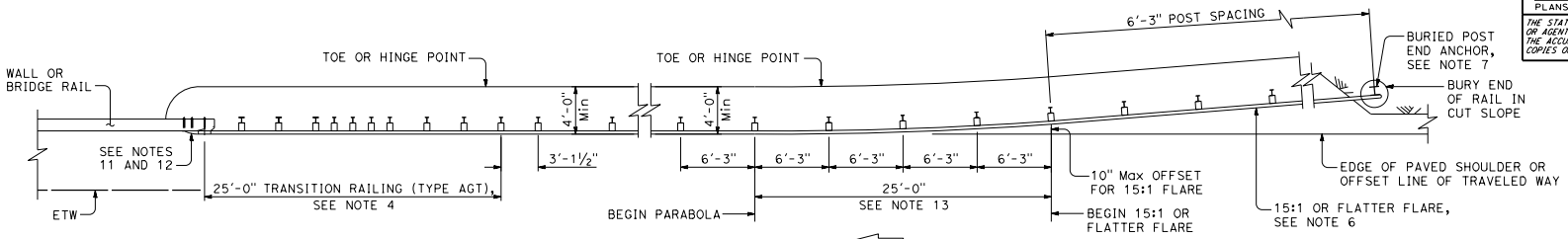

TYPE 12C LAYOUT

(MGS installation at structure approach with a Buried end anchor treatment at traffic approach end of railing), see Notes 8 and 9.

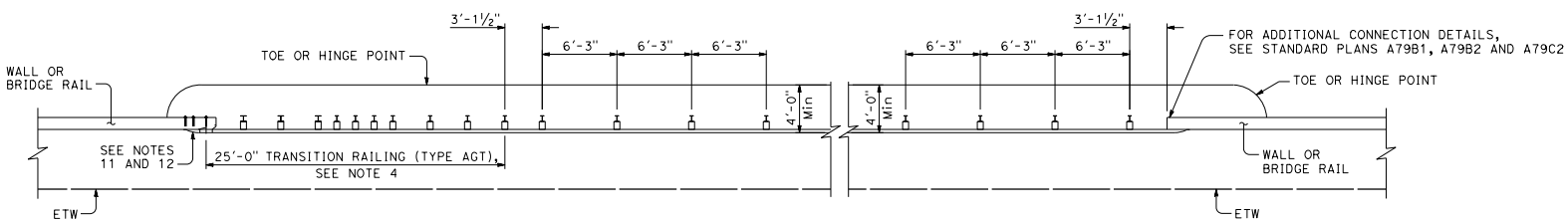

TYPE 12D LAYOUT

(Continuous MGS installation between structures), see Notes 5 and 9.

NOTES:

1. Line post, blocks and hardware to be used are shown on Standard Plans A77L1, A77L2, A77M1, A77N1, and A77N2.
2. MGS post spacing to be 6'-3" center to center, except as otherwise noted.
3. Except as noted, line posts are 6'-0" long Steel W6 x 9 or W6 x 8.5 with blocks, or 6" x 8" x 6'-0" wood with blocks.
4. For Transition Railing (Type AGT) details for Types 12C and 12D Layouts, see Standard Plans A79 Series.
5. Type 12D layout is typically used where continous MGS is recommended between structures.
6. The 15:1 or flatter flare for Type 12C Layout is based on the edge of offset line of edge of the traveled way. The length of MGS with the 15:1 or flatter flare is based on site conditions and should be a length equal to multiples of elements at 12'-6".
7. For details of the buried post end anchor used with Type 12C Layout, see Standard Plans A77T2 and A77T3.
8. Where placement of dike is required with MGS installations, see Standard Plan A77N4 for dike positioning details.
9. Type 12C Layout is typically used at the approach end of the structure to the right or left, on two-lane conventional highway where the roadbed width across the structure is 40 feet or less.
10. See Standard Plan A77Q3 for typical layout used left of approaching traffic at the ends of each structure on multilane freeways or expressways with separate adjacent or parallel bridges.
11. For additional details of typical connections to bridge rail, see Standard Plans A79 Series.
12. For additional details of a typical connection to walls or abutments, see Standard Plans A79C1 and A79C2.
13. For typical flare offsets for 25'-0" length parabola with maximum offset of 10", see Standard Plan A77P1.
14. Where continuous Thrie-beam is recommended between structures, see Standard Plans A79 Series.

STATE OF CALIFORNIA
DEPARTMENT OF TRANSPORTATION

MIDWEST GUARDRAIL SYSTEM TYPICAL LAYOUTS FOR STRUCTURE APPROACH AND BETWEEN STRUCTURES

NO SCALE

A77Q2

2026 STANDARD PLAN A77Q2

7-1-26

Return to Table of Contents

Dist	COUNTY	ROUTE	POST MILES TOTAL PROJECT	SHEET No.	TOTAL SHEETS

Jawad Naderi
REGISTERED CIVIL ENGINEER

September 18, 2026
PLANS APPROVAL DATE

REGISTERED PROFESSIONAL ENGINEER
Mohammad Jawad Naderi
No. C96340
Exp. 9-30-26
CIVIL
STATE OF CALIFORNIA

THE STATE OF CALIFORNIA OR ITS OFFICERS OR AGENTS SHALL NOT BE RESPONSIBLE FOR THE ACCURACY OR COMPLETENESS OF SCANNED COPIES OF THIS PLAN SHEET.

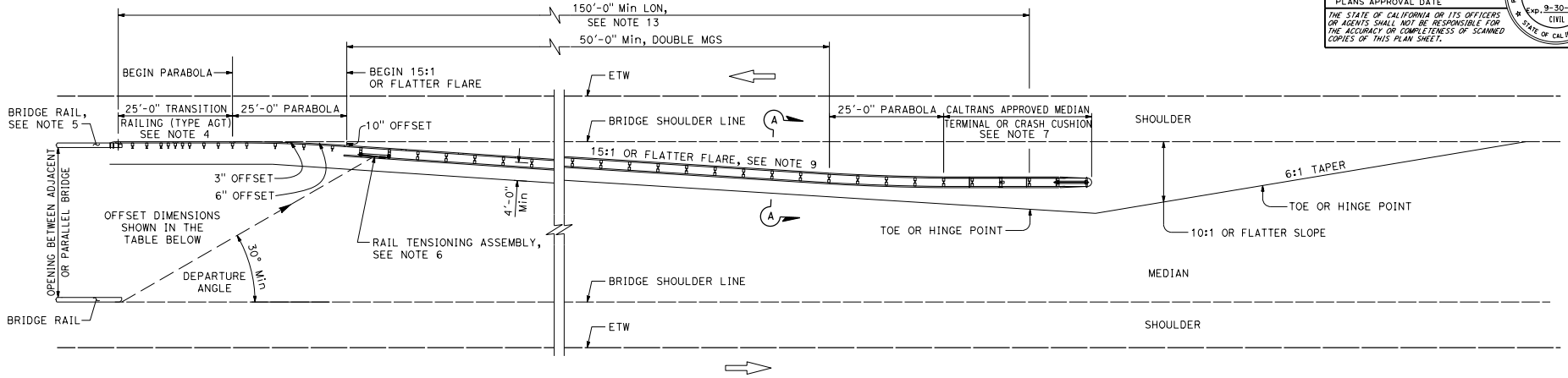

TYPE 12E LAYOUT

See Note 8

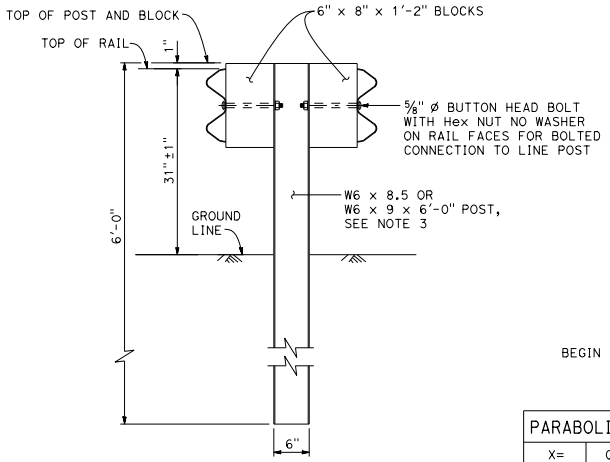

SECTION A-A

TYPICAL DOUBLE MIDWEST GUARDRAIL SYSTEM

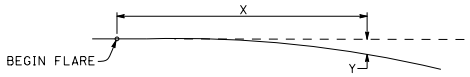

PARABOLIC FLARE OFFSETS FOR CONNECTION TO 15:1 FLARE								
X=	0.0'	6.25'	9.375'	12.5'	15.625'	18.75'	21.875'	25.00'
Y=	-	1"	2"	3"	4"	6"	8"	10"

Parabolic Flare may begin at full post spacing or at half post spacing.

NOTES:

1. Line post, blocks and hardware to be used are shown on Standard Plans A77L1, A77L2, A77M1, A77N1, and A77N2.
2. MGS post spacing to be 6'-3" center to center, except as otherwise noted.
3. Except as noted, line posts are 6'-0" long Steel W6 x 9 or W6 x 8.5 with blocks, or 6" x 8" x 6'-0" wood with blocks.
4. For Transition Railing (Type AGT) details, see Standard Plans A79A1 and A79A2.
5. For additional details of a typical connection to bridge rail, see Standard Plans A79 Series.
6. For Rail Tensioning Assembly details, see Standard Plan A77S2.
7. The median terminal or crash cushion to be used will be shown on the Project Plans.
8. Type 12E Layout is typically used left of approaching traffic at the end of each structure on multilane freeways or expressways where a median type barrier is not constructed between separated roadbeds.
9. The 15:1 or flatter flare is measured off of the edge of traveled way.
10. For parabolic details, see Standard Plan A77P1.
11. For bolted connection to line post when wood post and blocks are used for double MGS. Use 5/8" Dia button head bolt with Hex nut or 5/8" Dia rod, threaded both ends, with hex nuts. 1/2" Maximum exposed threads after hex nuts tightened.
12. For Thrie-beam details used in median application, see Standard Plan A78R with Type 25A layout.
13. A minimum of 150'-0" of MGS is needed to develop Length of Need (LON).

STATE OF CALIFORNIA
DEPARTMENT OF TRANSPORTATION

MIDWEST GUARDRAIL SYSTEM TYPICAL LAYOUTS FOR STRUCTURE APPROACH

NO SCALE

A77Q3

2026 STANDARD PLAN A77Q3

7-1-26

Return to Table of Contents

Dist	COUNTY	ROUTE	POST MILES TOTAL PROJECT	SHEET No.	TOTAL SHEETS

Jawad Naderi
REGISTERED CIVIL ENGINEER

September 18, 2026
PLANS APPROVAL DATE

REGISTERED PROFESSIONAL ENGINEER
Mohammad Jawad Naderi
No. C96340
Exp. 9-30-26
CIVIL
STATE OF CALIFORNIA

THE STATE OF CALIFORNIA OR ITS OFFICERS OR AGENTS SHALL NOT BE RESPONSIBLE FOR THE ACCURACY OR COMPLETENESS OF SCANNED COPIES OF THIS PLAN SHEET.

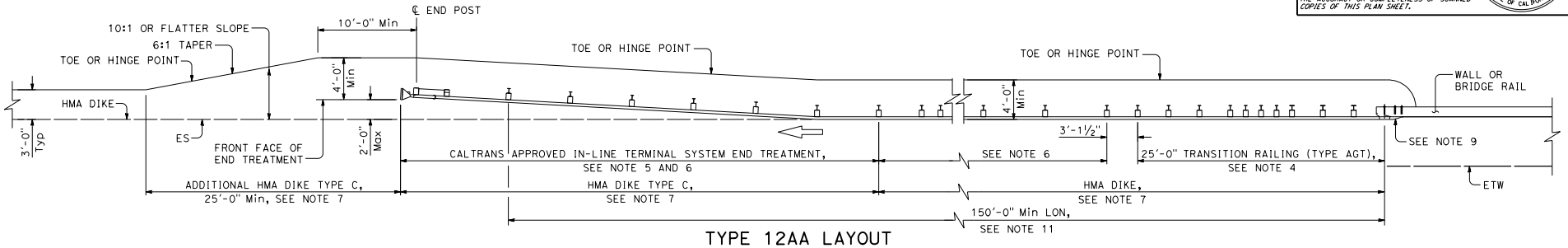

TYPE 12AA LAYOUT

(MGS installation at structure departure with in-line end treatment at trailing end of railing), see Notes 7 and 8.

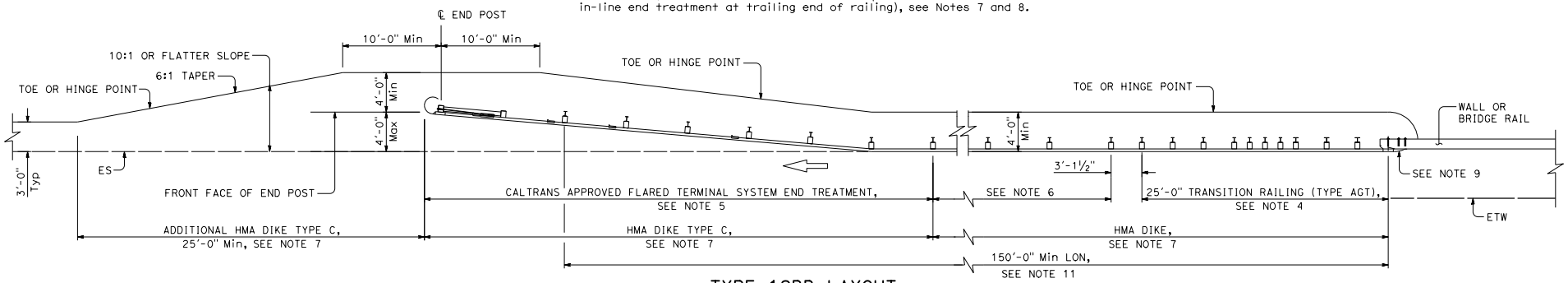

TYPE 12BB LAYOUT

(MGS installation at structure departure with Flared end treatment at trailing end of railing), see Notes 7 and 8.

NOTES:

1. Line post, blocks and hardware to be used are shown on Standard Plans A77L1, A77L2, A77M1, A77N1, and A77N2.
2. MGS post spacing to be 6'-3" center to center, except as otherwise noted.
3. Except as noted, line posts are 6'-0" long Steel W6 x 9 or W6 x 8.5 with blocks, or 6" x 8" x 6'-0" wood with blocks.
4. For Transition Railing (Type AGT) details for Types 12AA and 12BB Layouts, see Standard Plans A79A1 and A79A2.
5. The type of terminal system to be used will be shown on the Project Plans.
6. Dependent on site conditions (embankment height, side slopes, other fixed objects), it may be advisable to construct additional MGS (a length equal to multiples of 12'-6" with 6'-3" post spacing) between the transition railing and end treatments.
7. Where placement of dike is required with MGS installations, see Standard Plan A77N4 for dike positioning details.
8. Type 12AA or Type 12BB Layouts are typically used to the right or left of traffic departing a structure on two-way conventional highways where the roadbed width across the structure is less than 40 feet.
9. For additional details of typical connections to bridge rail, see Standard Plans A79 Series.
10. For roadways with parallel structures and non traversable medians, the Type 12AA or Type 12BB layout may be used.
11. A minimum of 150'-0" of MGS is needed to develop Length of Need (LON).

STATE OF CALIFORNIA
DEPARTMENT OF TRANSPORTATION

MIDWEST GUARDRAIL SYSTEM TYPICAL LAYOUTS FOR STRUCTURE DEPARTURE

NO SCALE

A77Q4

2026 STANDARD PLAN A77Q4

7-1-26

Return to Table of Contents

Dist	COUNTY	ROUTE	POST MILES TOTAL PROJECT	SHEET No.	TOTAL SHEETS

Jawad Naderi
REGISTERED CIVIL ENGINEER

September 18, 2026
PLANS APPROVAL DATE

REGISTERED PROFESSIONAL ENGINEER
Mohammad Jawad Naderi
No. C96340
Exp. 9-30-26
CIVIL
STATE OF CALIFORNIA

THE STATE OF CALIFORNIA OR ITS OFFICERS OR AGENTS SHALL NOT BE RESPONSIBLE FOR THE ACCURACY OR COMPLETENESS OF SCANNED COPIES OF THIS PLAN SHEET.

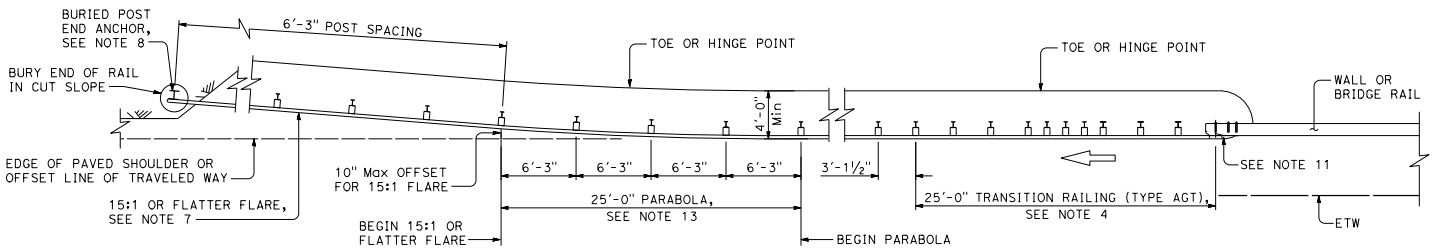

TYPE 12CC LAYOUT

(MGS installation at structure departure with a buried end anchor treatment at trailing end of railing), see Notes 9 and 10.

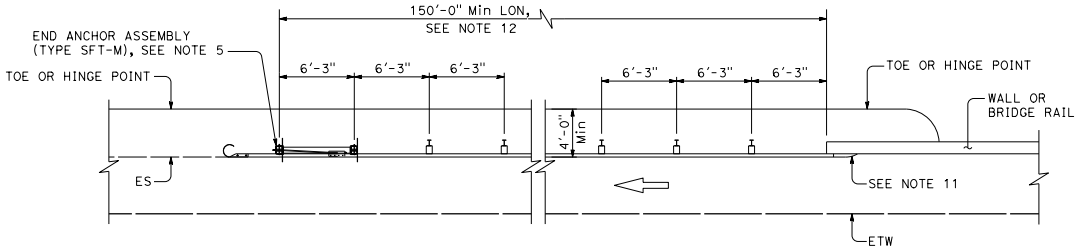

TYPE 12DD LAYOUT

(MGS installation at structure departure with end anchor assembly at trailing end of railing), see Notes 6 and 9.

NOTES:

1. Line post, blocks and hardware to be used are shown on Standard Plans A77L1, A77L2, A77M1, A77N1, and A77N2.
2. MSG post spacing to be 6'-3" center to center, except as otherwise noted.
3. Except as noted, line posts are 6'-0" long Steel W6 x 9 or W6 x 8.5 with blocks, or 6" x 8" x 6'-0" wood with blocks.
4. For Transition Railing (Type AGT) details for Type 12CC Layout, see Standard Plans A79 Series.
5. For details of End Anchor Assembly (Type SFT-M) used with Type 12DD Layout, see Standard Plan A77S1.
6. Type 12DD layout is typically used to the right of traffic departing a structure on two-way conventional highways where the roadbed width across the structure is equal to or greater than 40 feet and MGS is recommended (embankment height, side slopes or other fixed objects). Length of railing to be equal to multiples of 12'-6". For MGS connection details to bridge rail, see Standard Plans A79B1 and A79B2. For MGS connection details to wall, see Standard Plans A79C1 and A79C2.
7. The 15:1 or flatter flare for Type 12CC Layout is based on the edge of the paved shoulder or offset line of edge of the traveled way. The length of MGS within the 15:1 or flatter flare is based on site conditions and should be a length equal to multiples of 12'-6".
8. For details of the buried post end anchor used with Type 12CC Layout, see Standard Plans A77T2 and A77T3.
9. Where placement of dike is required with MGS installations, see Standard Plan A77N4 for dike positioning details.
10. Type 12CC Layout is typically used to the right of traffic departing a structure on two-way conventional highways where the roadbed width across the structure is less than 40 feet.
11. For additional details of a typical connection to bridge rail for Layout Type 12CC, and Layout Type 12DD, see Connection Details on Standard Plans A79 Series.
12. A minimum of 150'-0" of MGS is needed to develop Length of Need (LON).
13. For typical flare offsets for 25'-0" length parabola with maximum offset of 10", see Standard Plan A77P1.

STATE OF CALIFORNIA
DEPARTMENT OF TRANSPORTATION

MIDWEST GUARDRAIL SYSTEM TYPICAL LAYOUTS FOR STRUCTURE DEPARTURE

NO SCALE

A77Q5

2026 STANDARD PLAN A77Q5

7-1-26

Return to Table of Contents

Dist	COUNTY	ROUTE	POST MILES TOTAL PROJECT	SHEET No.	TOTAL SHEETS

Jawad Naderi
REGISTERED CIVIL ENGINEER

September 18, 2026
PLANS APPROVAL DATE

REGISTERED PROFESSIONAL ENGINEER Mohammad Jawad Naderi No. C96340 Exp. 9-30-26 CIVIL STATE OF CALIFORNIA

THE STATE OF CALIFORNIA OR ITS OFFICERS OR AGENTS SHALL NOT BE RESPONSIBLE FOR THE ACCURACY OR COMPLETENESS OF SCANNED COPIES OF THIS PLAN SHEET.

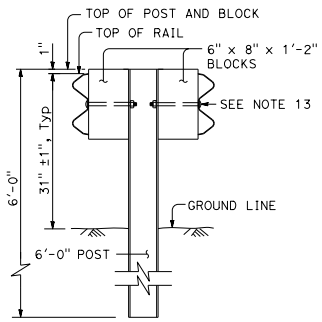

SECTION A-A
BOLTED BLOCK, RAIL AND POST
TYPICAL DOUBLE MIDWEST GUARDRAIL SYSTEM

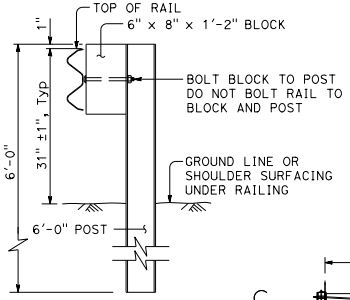

BOLT BLOCK TO POST DETAIL
SEE NOTE B

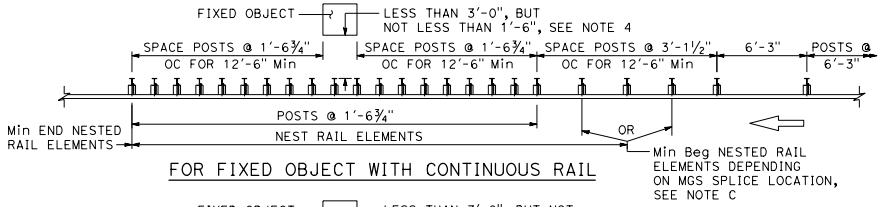

FOR FIXED OBJECT WITH CONTINUOUS RAIL

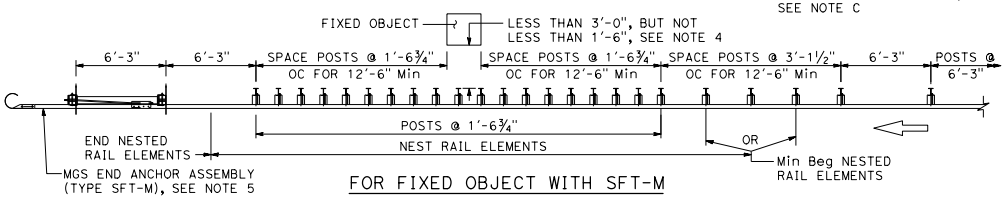

FOR FIXED OBJECT WITH SFT-M

STRENGTHENED MIDWEST GUARDRAIL SYSTEM

Use strengthened MGS sections with Type 14A, 15A, 16A, 16B, and 16C layouts where minimum clearance between the back of post and the fixed object(s) is less than 3'-0", but not less than 1'-6". End Anchor Assembly (Type SFT-M) shown without 1'-0" flare.

NOTE A: For a series of fixed objects 25'-0" or less apart, continue the post spacing at 1'-6¾" OC between fixed objects. For a series of fixed objects 25'-0" to 50'-0" OC space post at 3'-1½" OC until last 12'-6" prior to next fixed object, and space post at 1'-6¾" OC. For a series of fixed objects spaced over 50'-0" apart, return to standard post spacing and use Strengthened Rail Section for next fixed object.

NOTE B: Bolt rail element to post through block only when there is a manufactured slot in the rail element, but not at rail splices. Do not bolt rail element to block and post at rail element splices.

NOTE C: Nested Rail must continue through entire length of 1'-6¾" post spacing, and minimum 1 post upstream (prior).

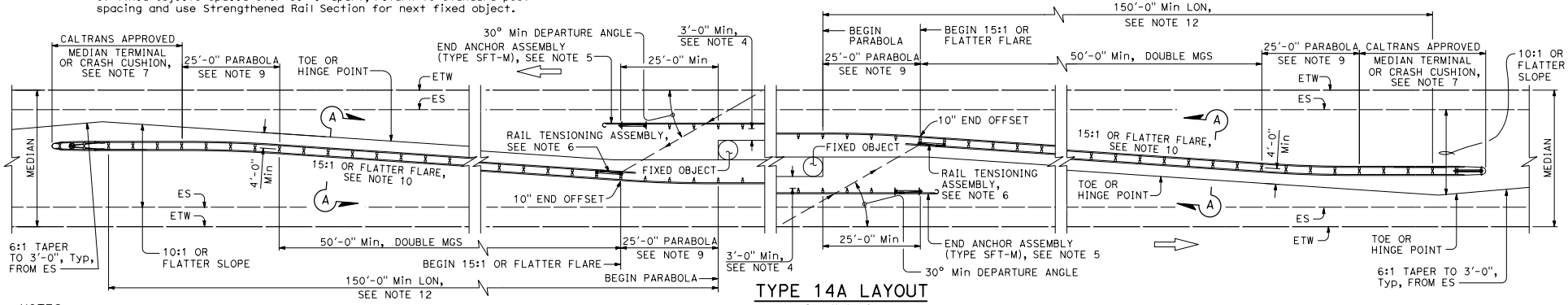

TYPE 14A LAYOUT
See Note 8

NOTES:

1. Line post, blocks and hardware to be used are shown on Standard Plans A77L1, A77L2, A77M1, A77N1, and A77N2.
2. MGS post spacing to be 6'-3" center to center, except as otherwise noted.
3. Except as noted, line posts are 6'-0" long steel, W6 x 9 or W6 x 8.5 with blocks, or 6" x 8" x 6'-0" wood with blocks.
4. A minimum clearance is required between the back of post and the face of a fixed object located directly behind MGS sections with post spacing of 6'-3". Construct MGS as shown in the detail "Strengthened Midwest Guardrail System Sections for Fixed Object with SFT-M" on this plan, where the clearance between the back of post and the face of a fixed object is less than 3'-0", but not less than 1'-6". Where the clearance is less than 1'-6", a concrete wall or barrier should be constructed to shield the fixed object(s).
5. For End Anchor Assembly (Type SFT-M) details, see Standard Plan A77S1.
6. For details of Rail Tensioning Assembly, see Standard Plan A77S2.
7. The median terminal or crash cushion to be used will be shown on the Project Plans.
8. Type 14A layout is typically used on multilane freeways or expressways to shield fixed objects where a median type barrier is not constructed between the separated roadbeds.
9. See Standard Plan A77P1 for parabolic flare offset details.
10. The 15:1 or flatter flare is measured off of the edge of traveled way.
11. Standard 6'-0" long steel or wood post with blocks to be used in the detail "Strengthened Midwest Guardrail System Sections for Fixed Object".
12. A minimum of 150'-0" MGS is needed to develop Length of Need (LON).
13. For steel posts, use ⅝" ø button head bolt with hex nut. For wood post, use ⅝" ø button head bolt or threaded rod with hex nut. After hex nut(s) are tightened, maximum exposed thread are ½". No washer on rail faces.

STATE OF CALIFORNIA
DEPARTMENT OF TRANSPORTATION

MIDWEST GUARDRAIL SYSTEM TYPICAL LAYOUTS FOR FIXED OBJECTS BETWEEN SEPARATE ROADBEDS (TWO-WAY TRAFFIC)

NO SCALE

A77R1

7-1-26

Return to Table of Contents

Dist	COUNTY	ROUTE	POST MILES TOTAL PROJECT	SHEET No.	TOTAL SHEETS

Jawad Naderi
REGISTERED CIVIL ENGINEER

September 18, 2026
PLANS APPROVAL DATE

REGISTERED PROFESSIONAL ENGINEER
Mohammad Jawad Naderi
No. C96340
Exp. 9-30-26
CIVIL
STATE OF CALIFORNIA

THE STATE OF CALIFORNIA OR ITS OFFICERS OR AGENTS SHALL NOT BE RESPONSIBLE FOR THE ACCURACY OR COMPLETENESS OF SCANNED COPIES OF THIS PLAN SHEET.

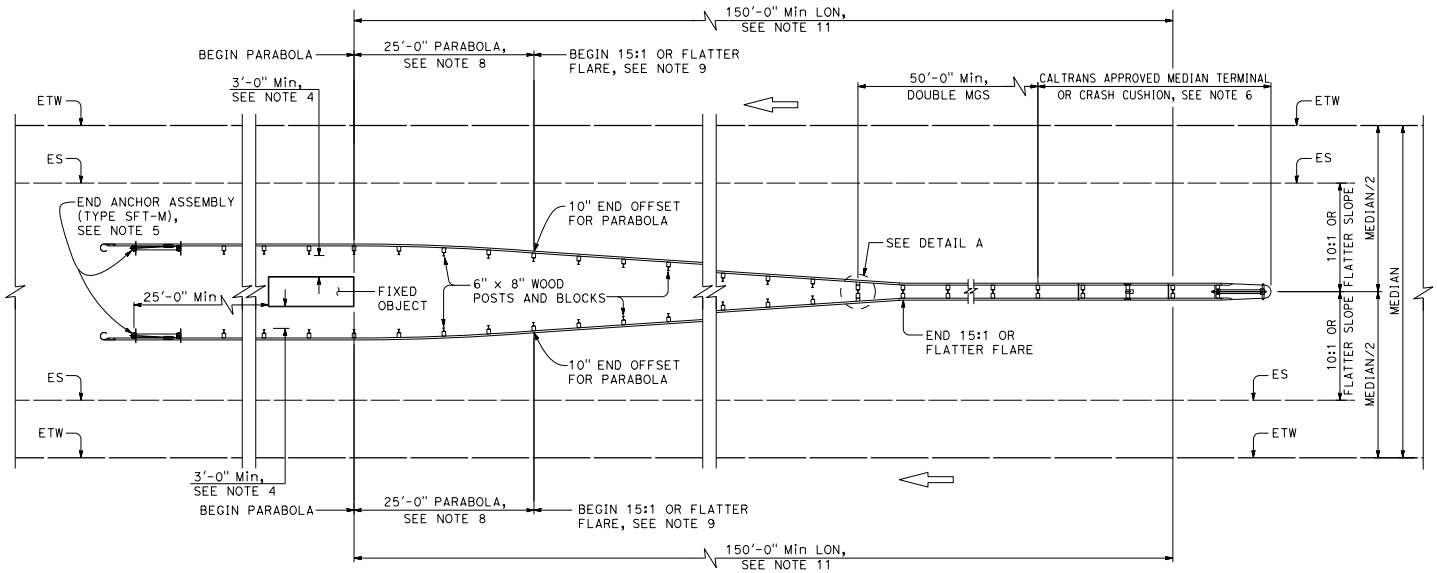

TYPE 15A LAYOUT
See Note 7

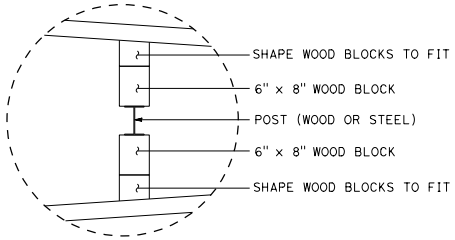

DETAIL A

NOTES:

1. Line post, blocks and hardware to be used are shown on Standard Plans A77L1, A77L2, A77M1, A77N1, and A77N2.
2. MGS post spacing to be 6'-3" center to center, except as otherwise noted.
3. Except as noted, line posts are 6'-0" long Steel W6 x 9 or W6 x 8.5 with blocks, or 6" x 8" x 6'-0" wood with blocks.
4. See Standard Plan A77S1 for clearance distance behind the rail within 50'-0" of End Anchor Assembly (Type SFT-M). Construct MGS as shown in the detail "Strengthened Midwest Guardrail System Sections for Fixed Object with SFT-M" on Standard Plan A77R1, where the clearance between the back of post and the face of a fixed object is less than 3'-0", but not less than 1'-6". Where the clearance is less than 1'-6", a concrete wall or barrier should be constructed to shield the fixed object(s).
5. For End Anchor Assembly (Type SFT-M) details, see Standard Plan A77S1.
6. The median terminal or crash cushion to be used will be shown on the Project Plans.
7. Type 15A layout is typically used on multilane freeways or expressways to shield fixed objects in the area between separated one-way roadbeds.
8. See Standard Plan A77P1 for parabolic flare offset details.
9. The 15:1 or flatter flare is measured off of the edge of traveled way.
10. Standard 6'-0" long steel or wood post with blocks to be used in the detail "Strengthened Midwest Guardrail System Sections for Fixed Object with SFT-M".
11. A minimum of 150'-0" MGS is needed to develop Length of Need (LON).

STATE OF CALIFORNIA
DEPARTMENT OF TRANSPORTATION

MIDWEST GUARDRAIL SYSTEM TYPICAL LAYOUTS FOR FIXED OBJECTS BETWEEN SEPARATE ROADBEDS (ONE-WAY TRAFFIC)

NO SCALE

A77R2

2026 STANDARD PLAN A77R2

7-1-26

Return to Table of Contents

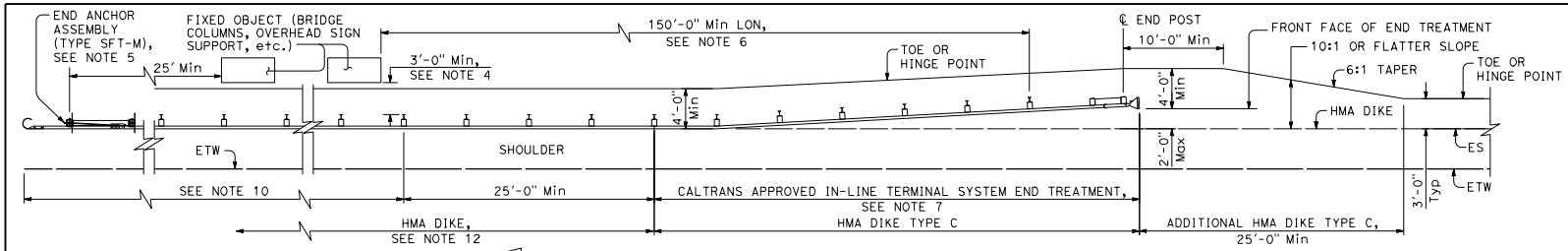

TYPE 16A LAYOUT

(MGS installation at roadside fixed object or objects with in-line end treatment at traffic approach end of railing), see Notes 11 and 12.

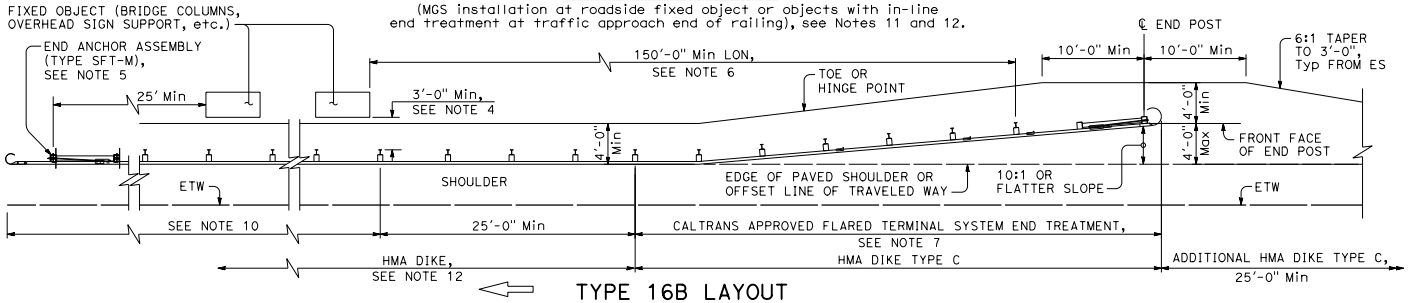

TYPE 16B LAYOUT

(MGS installation at roadside fixed object or objects with flared end treatment at traffic approach end of railing), see Notes 11 and 12.

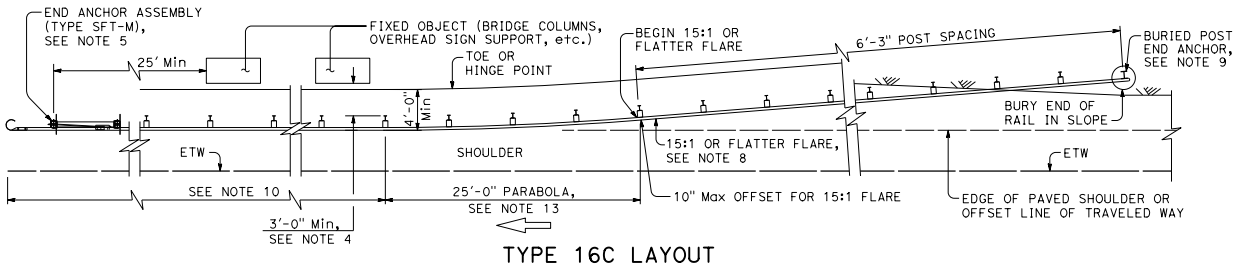

TYPE 16C LAYOUT

(MGS installation at roadside fixed object or objects with a buried end anchor treatment at traffic approach end of railing), see Note 11.

Dist	COUNTY	ROUTE	POST MILES TOTAL PROJECT	SHEET No.	TOTAL SHEETS

Jawad Naderi
REGISTERED CIVIL ENGINEER

September 18, 2026
PLANS APPROVAL DATE

REGISTERED PROFESSIONAL ENGINEER Mohammad Jawad Naderi No. C96340 Exp. 9-30-26 CIVIL STATE OF CALIFORNIA

THE STATE OF CALIFORNIA OR ITS OFFICERS OR AGENTS SHALL NOT BE RESPONSIBLE FOR THE ACCURACY OR COMPLETENESS OF SCANNED COPIES OF THIS PLAN SHEET.

NOTES:

1. Line post, blocks and hardware to be used are shown on Standard Plans A77L1, A77L2, A77M1, A77N1 and A77N2.
2. MGS post spacing to be 6'-3" center to center, except as otherwise noted.
3. Except as noted, line posts are 6'-0" long Steel W6 x 9 or W6 x 8.5 with blocks, or 6" x 8" x 6'-0" wood with blocks.
4. A minimum clearance is required between the back of post and the face of a fixed object located directly behind MGS sections with post spacing of 6'-3". Construct MGS as shown in the detail "Strengthened Midwest Guardrail System Sections for Fixed Object with SFT-M" on Standard Plan A77R1, where the clearance between the back of post and the face of a fixed object is less than 3'-0", but not less than 1'-6". Where the clearance is less than 1'-6", a concrete wall or barrier should be constructed to shield the fixed object(s).
5. For End Anchor Assembly (Type SFT-M) details, see Standard Plan A77S1.
6. A minimum of 150'-0" MGS is needed to develop Length of Need (LON).
7. The type of terminal system to be used will be shown on the Project Plans.
8. The 15:1 or flatter flare used with Type 16C Layout is based on the edge of paved shoulder or offset line of edge of traveled way. The length of MGS within the 15:1 or flatter flare is based on site conditions and should be a length equal to multiples of 12'-6".
9. For details of the Buried Post End Anchor used with Type 16C Layout, see Standard Plans A77T2 and A77T3.
10. As site conditions dictate, construct additional MGS to shield fixed object(s). Additional MGS length equal to multiples of 12'-6". Post spacing at 6'-3" except as specified in Note 4.
11. Layout Types 16A, 16B or 16C are typically used where MGS is recommended to shield roadside fixed object(s) and a crashworthy end treatment is required for only one direction of traffic.
12. Where placement of dike is required with MGS, see Standard Plan A77N4 for dike positioning details.
13. See Standard Plan A77P1 for parabolic flare offset details.

STATE OF CALIFORNIA
DEPARTMENT OF TRANSPORTATION

MIDWEST GUARDRAIL SYSTEM TYPICAL LAYOUTS FOR ROADSIDE FIXED OBJECTS

NO SCALE

A77R3

2026 STANDARD PLAN A77R3

7-1-26

Return to Table of Contents

Dist	COUNTY	ROUTE	POST MILES TOTAL PROJECT	SHEET No.	TOTAL SHEETS

Jawad Naderi
REGISTERED CIVIL ENGINEER

September 18, 2026
PLANS APPROVAL DATE

REGISTERED PROFESSIONAL ENGINEER Mohammad Jawad Naderi No. C96340 Exp. 9-30-26 CIVIL STATE OF CALIFORNIA

THE STATE OF CALIFORNIA OR ITS OFFICERS OR AGENTS SHALL NOT BE RESPONSIBLE FOR THE ACCURACY OR COMPLETENESS OF SCANNED COPIES OF THIS PLAN SHEET.

NOTE A: For a series of fixed objects 25'-0" or less apart, continue the post spacing at 1'-6¾" OC between fixed objects. For a series of fixed objects 25'-0" to 50'-0" OC space post at 3'-1½" OC until last 12'-6" prior to next fixed object, and space post at 1'-6¾" OC. For a series of fixed objects spaced over 50'-0" apart, return to standard post spacing and use Strengthened Rail Section for next fixed object.

NOTE B: Bolt rail element to post through block only when there is a manufactured slot in the rail element, but not at rail splices. Do not bolt rail element to block and post at rail element splices.

NOTE C: Nested Rail must continue through entire length of 1'-6¾" post spacing, and minimum 1 post upstream (prior).

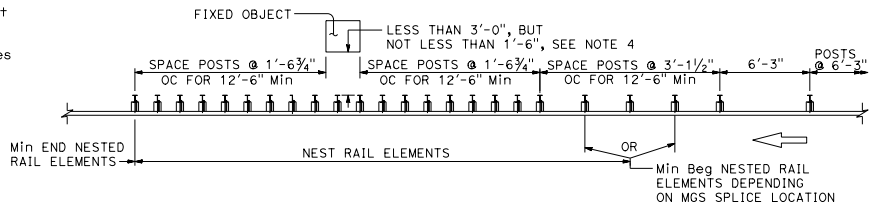

STRENGTHENED MIDWEST GUARDRAIL SYSTEM SECTIONS FOR FIXED OBJECT WITH CONTINUOUS RAIL

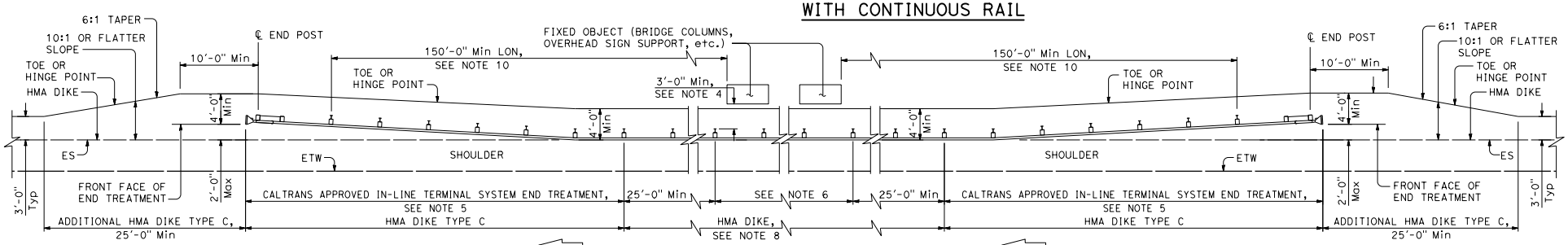

TYPE 16D LAYOUT

(Guard railing installation at roadside fixed object or objects with in-line end treatment at each end of railing), see note 7.

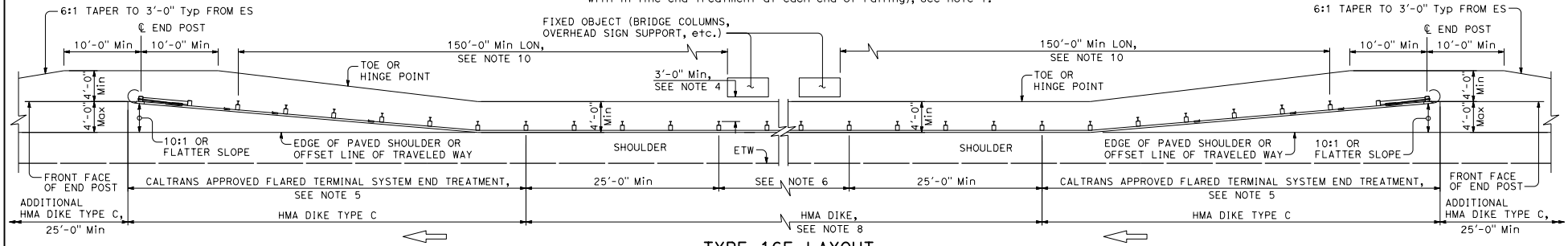

TYPE 16E LAYOUT

(Guard railing installation at roadside fixed object or objects with flared end treatment at each end of railing), see Note 7.

NOTES:

1. Line post, blocks and hardware to be used are shown on Standard Plans A77L1, A77L2, A77M1, A77N1, and A77N2.
2. MGS post spacing to be 6'-3" center to center, except as otherwise noted.
3. Except as noted, line posts are 6'-0" long Steel W6 x 9 or W6 x 8.5 with blocks, or 6" x 8" x 6'-0" wood with blocks.
4. A minimum clearance is required between the back of post and the face of a fixed object located directly behind MGS sections with post spacing at 6'-3". Construct MGS as shown in the detail "Strengthened Midwest Guardrail System Sections for Fixed Object with Continuous Rail" on this plan, where the clearance between the back of post and the face of a fixed object is less than 3'-0", but not less than 1'-6". Where the clearance is less than 1'-6", a concrete wall or barrier should be constructed to shield the fixed object(s).
5. The type of terminal system to be used will be shown on the Project Plans.
6. As site conditions dictate, construct additional MGS to shield fixed object(s). Additional MGS length equal to multiples of 12'-6". Post spacing at 6'-3", except as specified in Note 4.
7. Layout Types 16D through 16L, shown on the Standard Plans A77R Series, are typically used where MGS is recommended to shield roadside fixed object(s) and a crashworthy end treatment is required for both directions of traffic.
8. Where placement of dike is required with MGS, see Standard Plan A77N4 for dike positioning details.
9. Standard 6' long steel or wood post with blocks to be used in the detail "Strengthened Midwest Guardrail System Sections for Fixed Object with Continuous Rail".
10. A minimum of 150'-0" MGS is needed to develop Length of Need (LON).

STATE OF CALIFORNIA
DEPARTMENT OF TRANSPORTATION

MIDWEST GUARDRAIL SYSTEM TYPICAL LAYOUTS FOR ROADSIDE FIXED OBJECTS

NO SCALE

A77R4

2026 STANDARD PLAN A77R4

7-1-26

Return to Table of Contents

Dist	COUNTY	ROUTE	POST MILES TOTAL PROJECT	SHEET No.	TOTAL SHEETS

Jawad Naderi
REGISTERED CIVIL ENGINEER

September 18, 2026
PLANS APPROVAL DATE

REGISTERED PROFESSIONAL ENGINEER
Mohammad Jawad Naderi
No. C96340
Exp. 9-30-26
CIVIL
STATE OF CALIFORNIA

THE STATE OF CALIFORNIA OR ITS OFFICERS OR AGENTS SHALL NOT BE RESPONSIBLE FOR THE ACCURACY OR COMPLETENESS OF SCANNED COPIES OF THIS PLAN SHEET.

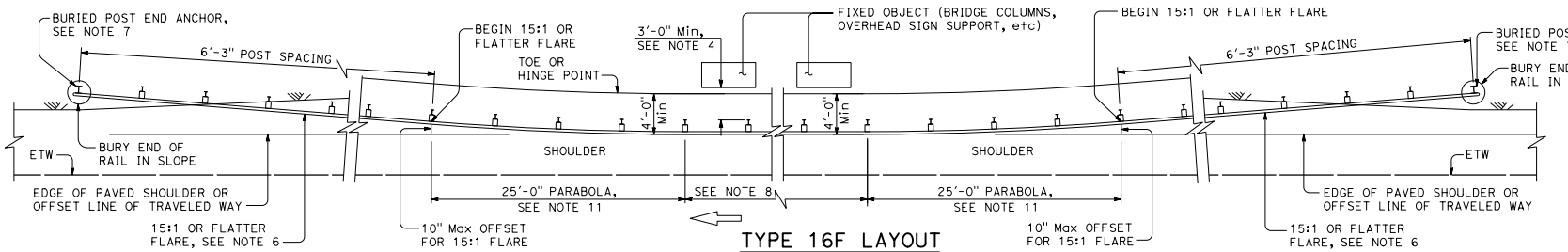

TYPE 16F LAYOUT

(MGS installation at roadside fixed object or objects with a buried end anchor treatment at each end of railing), see Notes 9 and 10.

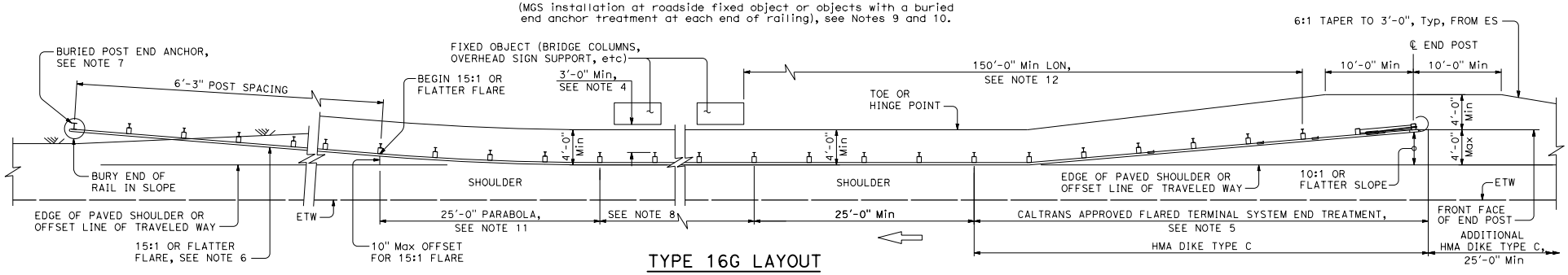

TYPE 16G LAYOUT

(MGS installation at roadside fixed object or objects with in-line end treatment and a buried end anchor treatment at the ends of railing), see Notes 9 and 10.

NOTES:

1. Line post, blocks and hardware to be used are shown on Standard Plans A77L1, A77L2, A77M1, A77N1, and A77N2.
2. MGS post spacing to be 6'-3" center to center, except as otherwise noted.
3. Except as noted, line posts are 6'-0" long Steel W6 x 9 or W6 x 8.5 with blocks, or 6" x 8" x 6'-0" wood with blocks.
4. A minimum clearance is required between the back of post and the face of a fixed object located directly behind MGS sections with post spacing at 6'-3". Construct MGS as shown in the detail "Strengthened Midwest Guardrail System Sections for Fixed Object with Continuous Rail" on Standard Plan A77R4, where the clearance between the back of post the face of a fixed object is less than 3'-0", but not less than 1'-6". Where the clearance is less than 1'-6", a concrete wall or barrier should be constructed to shield the fixed object(s).
5. The type of terminal system to be used will be shown on the Project Plans.
6. The 15:1 or flatter flare is based on the edge of paved shoulder or offset line of edge of traveled way. The length of MGS within the 15:1 or flatter flare is based on site conditions and should be a length equal to multiples of 12'-6".
7. For details of the Buried Post End Anchor, see Standard Plans A77T2 and A77T3.
8. As site conditions dictate, construct additional MGS to shield fixed object(s). Additional MGS length equal to multiples of 12'-6". Post spacing at 6'-3", except as specified in Note 4.
9. Layout Types 16D through 16L, shown on the Standard Plans A77R Series, are typically used on highways where MGS is recommended to shield roadside fixed object(s) and a crashworthy end treatment isrequired for both directions of traffic.
10. Where placement of dike is required with MGS, see Standard Plan A77N4 for dike positioning details.
11. See Standard Plan A77P1 for parabolic flare offset details.
12. A minimum of 150'-0" MGS is needed to develop Length of Need (LON).

STATE OF CALIFORNIA
DEPARTMENT OF TRANSPORTATION

MIDWEST GUARDRAIL SYSTEM TYPICAL LAYOUTS FOR ROADSIDE FIXED OBJECTS

NO SCALE

A77R5

2026 STANDARD PLAN A77R5

7-1-26

Return to Table of Contents

Dist	COUNTY	ROUTE	POST MILES TOTAL PROJECT	SHEET No.	TOTAL SHEETS

Jawad Naderi
REGISTERED CIVIL ENGINEER

September 18, 2026
PLANS APPROVAL DATE

REGISTERED PROFESSIONAL ENGINEER
Mohammad Jawad Naderi
No. C96340
Exp. 9-30-26
CIVIL
STATE OF CALIFORNIA

THE STATE OF CALIFORNIA OR ITS OFFICERS OR AGENTS SHALL NOT BE RESPONSIBLE FOR THE ACCURACY OR COMPLETENESS OF SCANNED COPIES OF THIS PLAN SHEET.

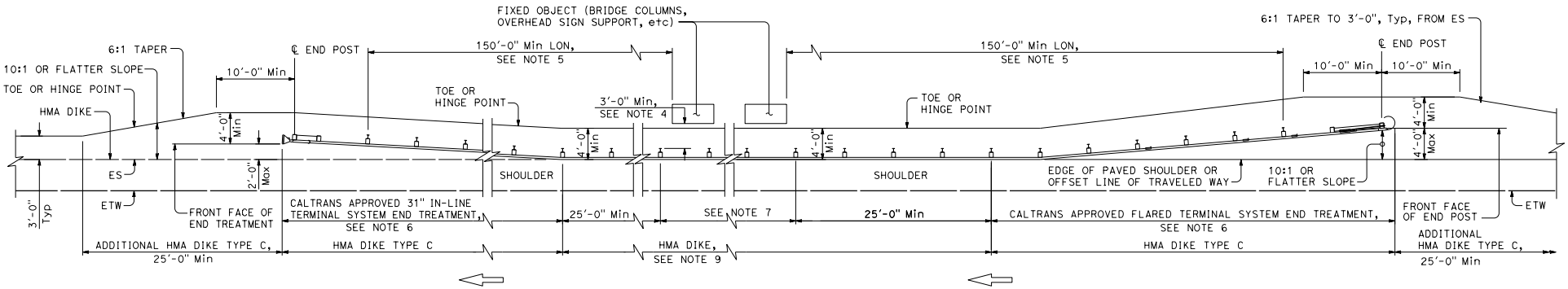

TYPE 16H LAYOUT

(MGS installation at roadside fixed object or objects with flared end treatment and in-line end treatment at the ends of railing), see Note 8.

NOTES:

1. Line post, blocks and hardware to be used are shown on Standard Plans A77L1, A77L2, A77M1, A77N1, and A77N2.
2. MGS post spacing to be 6'-3" center to center, except as otherwise noted.
3. Except as noted, line posts are 6'-0" long Steel W6 x 9 or W6 x 8.5 with blocks, or 6" x 8" x 6'-0" wood with blocks.
4. A minimum clearance is required between the back of post and the face of a fixed object located directly behind MGS sections with post spacing at 6'-3". Construct MGS as shown in the detail "Strengthened Midwest Guardrail System Sections for Fixed Object with Continuous Rail" on Standard Plan A77R4, where the clearance between the back of post and the face of a fixed object is less than 3'-0", but not less than 1'-6". Where the clearance is less than 1'-6", a concrete wall or barrier should be constructed to shield the fixed object(s).
5. A minimum of 150'-0" MGS is needed to develop Length of Need (LON).
6. The type of terminal system to be used will be shown on the Project Plans.
7. As site conditions dictate, construct additional MGS to shield fixed object(s). Additional MGS length equal to multiples of 12'-6". Post spacing at 6'-3", except as specified in Note 4.
8. Layout Types 16D through 16L, shown on the Standard Plans A77R Series, are typically used where MGS is recommended to shield roadside fixed object(s) and a crashworthy end treatment is required for both directions of traffic.
9. Where placement of dike is required with MGS, see Standard Plan A77N4 for dike positioning details.

STATE OF CALIFORNIA
DEPARTMENT OF TRANSPORTATION

MIDWEST GUARDRAIL SYSTEM TYPICAL LAYOUTS FOR ROADSIDE FIXED OBJECTS

NO SCALE

A77R6

7-1-26

2026 STANDARD PLAN A77R6

Return to Table of Contents

Dist	COUNTY	ROUTE	POST MILES TOTAL PROJECT	SHEET No.	TOTAL SHEETS

Jawad Naderi
REGISTERED CIVIL ENGINEER

September 18, 2026
PLANS APPROVAL DATE

REGISTERED PROFESSIONAL ENGINEER
Mohammad Jawad Naderi
No. C96340
Exp. 9-30-26
CIVIL
STATE OF CALIFORNIA

THE STATE OF CALIFORNIA OR ITS OFFICERS OR AGENTS SHALL NOT BE RESPONSIBLE FOR THE ACCURACY OR COMPLETENESS OF SCANNED COPIES OF THIS PLAN SHEET.

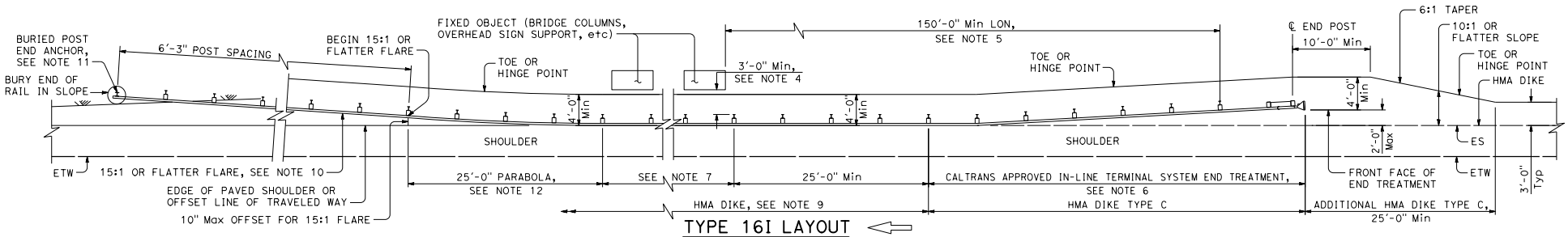

TYPE 16I LAYOUT

(MGS installation at roadside fixed object or objects with in-line end treatment and a buried end anchor treatment at the ends of railing), see Note 8.

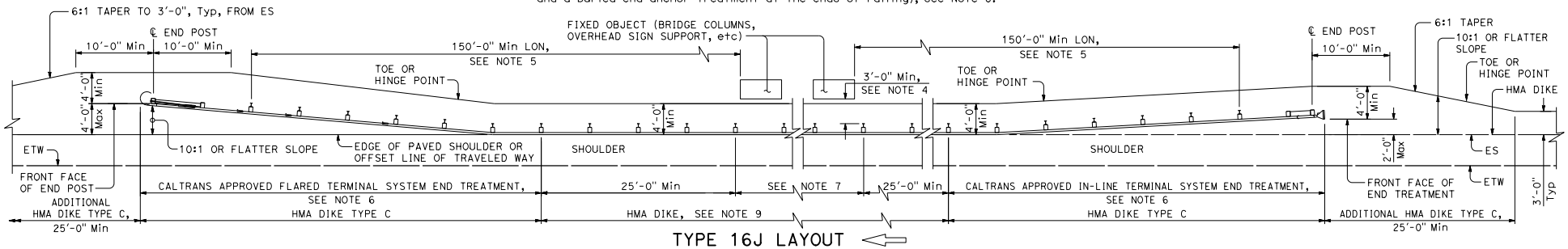

TYPE 16J LAYOUT

(MGS installation at roadside fixed object or objects with a in-line end treatment and a flared end treatment at the ends of railing), see Note 8.

NOTES:

1. Line post, blocks and hardware to be used are shown on Standard Plans A77L1, A77L2, A77M1, A77N1, and A77N2.
2. MGS post spacing to be 6'-3" center to center, except as otherwise noted.
3. Except as noted, line posts are 6'-0" long Steel W6 x 9 or W6 x 8.5 with blocks, or 6" x 8" x 6'-0" wood with blocks.
4. A minimum clearance is required between the back of post and the face of a fixed object located directly behind MGS sections with post spacing at 6'-3". Construct MGS as shown in the detail "Strengthened Midwest Guardrail System Sections for Fixed Object with Continuous Rail" on Standard Plans A77R1 and A77R4 where the clearance between the back of post and the face of a fixed object is less than 3'-0", but not less than 1'-6". Where the clearance is less than 1'-6", a concrete wall or barrier should be constructed to shield the fixed object(s).
5. A minimum of 150'-0" MGS is needed to develop Length of Need (LON).
6. The type of terminal system to be used will be shown on the Project Plans.
7. As site conditions dictate, construct additional MGS to shield fixed object(s). Additional MGS length equal to multiples of 12'-6". Post spacing at 6'-3", except as specified in Note 4.
8. Layout Types 16D through 16L, shown on the Standard Plans A77R Series, are typically used where MGS is recommended to shield roadside fixed object(s) and a crashworthy end treatment is required for both directions of traffic.
9. Where placement of dike is required with guard railing, see Standard Plan A77N4 for dike positioning details.
10. The 15:1 or flatter flare is based on the edge of the paved shoulder or offset line of edge of traveled way. The length of MGS within the 15:1 or flatter flare is based on site conditions and should be a length equal to multiples of 12'-6".
11. For details of Buried Post End Anchor, see Standard Plans A77T2 and A77T3.
12. See Standard Plan A77P1 for parabolic flare offset details.

STATE OF CALIFORNIA
DEPARTMENT OF TRANSPORTATION

MIDWEST GUARDRAIL SYSTEM TYPICAL LAYOUTS FOR ROADSIDE FIXED OBJECTS

NO SCALE

A77R7

7-1-26

2026 STANDARD PLAN A77R7

Return to Table of Contents

Dist	COUNTY	ROUTE	POST MILES TOTAL PROJECT	SHEET No.	TOTAL SHEETS

Jawad Naderi
REGISTERED CIVIL ENGINEER

September 18, 2026
PLANS APPROVAL DATE

REGISTERED PROFESSIONAL ENGINEER
Mohammad Jawad Naderi
No. C96340
Exp. 9-30-26
CIVIL
STATE OF CALIFORNIA

THE STATE OF CALIFORNIA OR ITS OFFICERS OR AGENTS SHALL NOT BE RESPONSIBLE FOR THE ACCURACY OR COMPLETENESS OF SCANNED COPIES OF THIS PLAN SHEET.

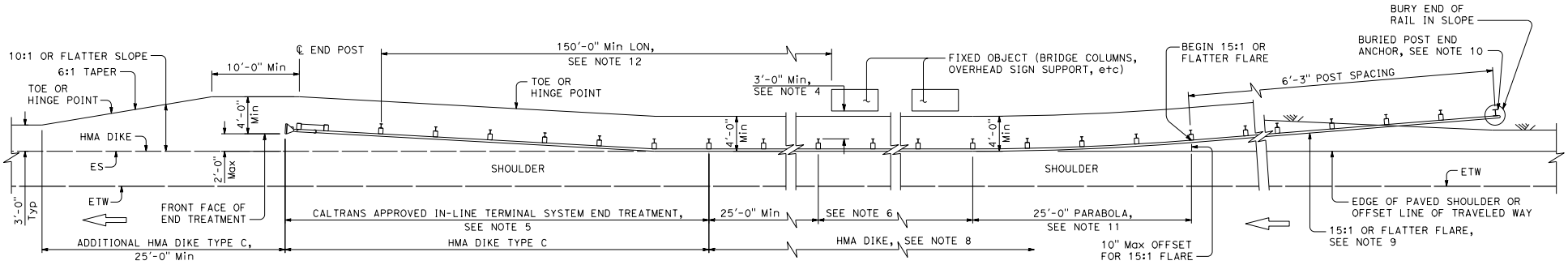

TYPE 16K LAYOUT

(MGS installation at roadside fixed object or objects with a buried end anchor treatment and an in-line end treatment at the ends of railing), see Note 7.

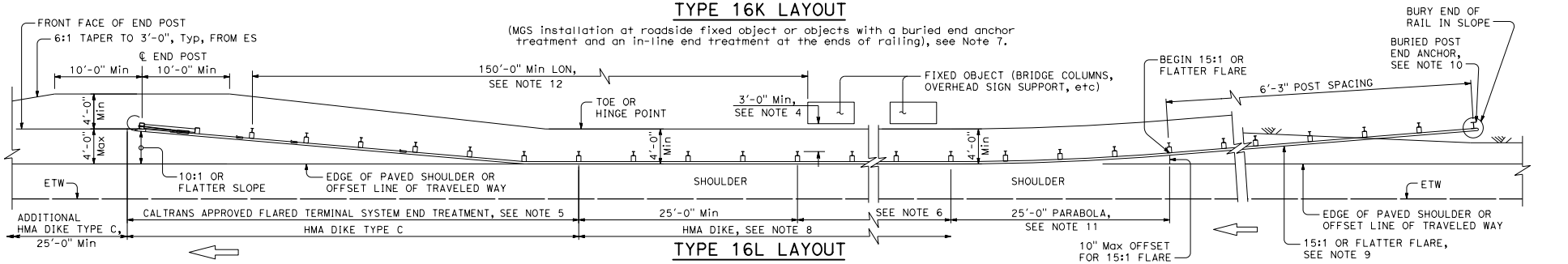

TYPE 16L LAYOUT

(MGS installation at roadside fixed object or objects with a buried end anchor treatment and an in-line end treatment at the ends of railing), see Note 7.

NOTES:

1. Line post, blocks and hardware to be used are shown on Standard Plans A77L1, A77L2, A77M1, A77N1, and A77N2.
2. MGS post spacing to be 6'-3" center to center, except as otherwise noted.
3. Except as noted, line posts are 6'-0" long Steel W6 x 9 or W6 x 8.5 with blocks, or 6" x 8" x 6'-0" wood with blocks.
4. A minimum clearance is required between the back of post and the face of a fixed object located directly behind MGS sections with post spacing at 6'-3". Construct MGS as shown in the detail "Strengthened Midwest Guardrail System Sections for Fixed Objects with Continuous Rail" on Standard Plan A77R4, where the clearance between the back of post and the face of a fixed object is less than 3'-0", but not less than 1'-6". Where the clearance is less than 1'-6", a concrete wall or barrier should be constructed to shield the fixed object(s).
5. The type of terminal system to be used will be shown on the Project Plans.
6. As site conditions dictate, construct additional MGS to shield fixed object(s). Additional MGS length equal to multiples of 12'-6". Post spacing at 6'-3", except as specified in Note 4.
7. Layout Types 16D through 16L, shown on the Standard Plans A77R Series, are typically used where MGS is recommended to shield roadside fixed object(s) and a crashworthy end treatment is required for both directions of traffic.
8. Where placement of dike is required with MGS, see Standard Plan A77N4 for dike positioning details.
9. The 15:1 or flatter flare is based on the edge of paved shoulder or offset line of edge of traveled way. The length of MGS within the 15:1 or flatter flare is based on site conditions and should be a length equal to multiples of 12'-6".
10. For details of Buried Post End Anchor, see Standard Plans A77T2 and A77T3.
11. See Standard Plan A77P1 for parabolic flare offset details.
12. A minimum of 150'-0" MGS is needed to develop Length of Need (LON).

STATE OF CALIFORNIA
DEPARTMENT OF TRANSPORTATION

MIDWEST GUARDRAIL SYSTEM TYPICAL LAYOUTS FOR ROADSIDE FIXED OBJECTS

NO SCALE

A77R8

2026 STANDARD PLAN A77R8

7-1-26

Return to Table of Contents

Dist	COUNTY	ROUTE	POST MILES TOTAL PROJECT	SHEET No.	TOTAL SHEETS

Jawad Naderi
REGISTERED CIVIL ENGINEER

September 18, 2026
PLANS APPROVAL DATE

REGISTERED PROFESSIONAL ENGINEER Mohammad Jawad Naderi No. C96340 Exp. 9-30-26 CIVIL STATE OF CALIFORNIA

THE STATE OF CALIFORNIA OR ITS OFFICERS OR AGENTS SHALL NOT BE RESPONSIBLE FOR THE ACCURACY OR COMPLETENESS OF SCANNED COPIES OF THIS PLAN SHEET.

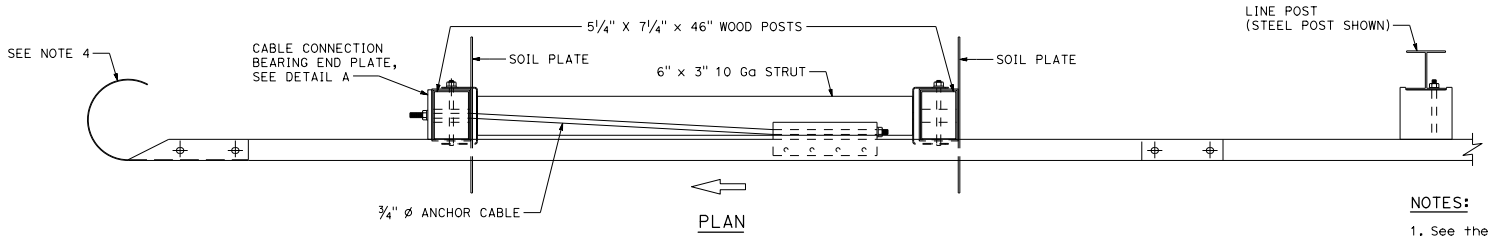

PLAN

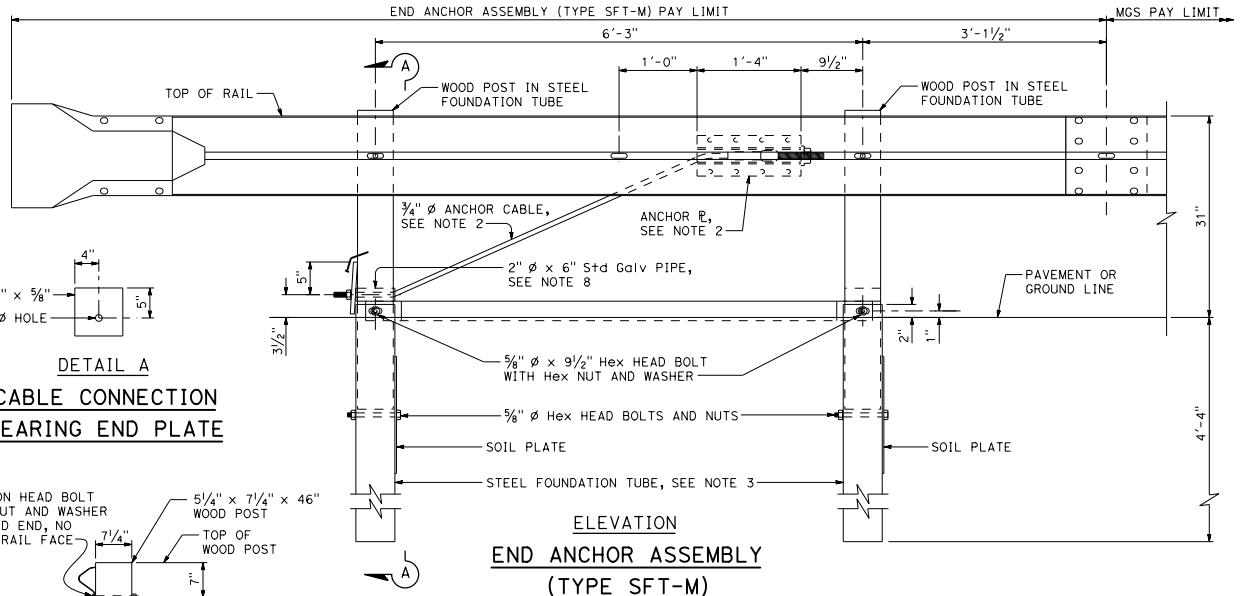

ELEVATION

END ANCHOR ASSEMBLY (TYPE SFT-M)

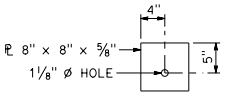

DETAIL A

CABLE CONNECTION BEARING END PLATE

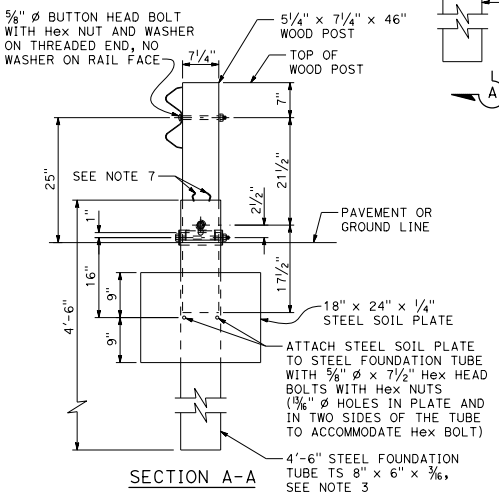

SECTION A-A

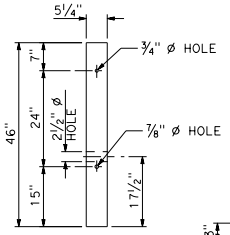

WOOD POST IN STEEL FOUNDATION TUBE

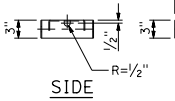

SIDE

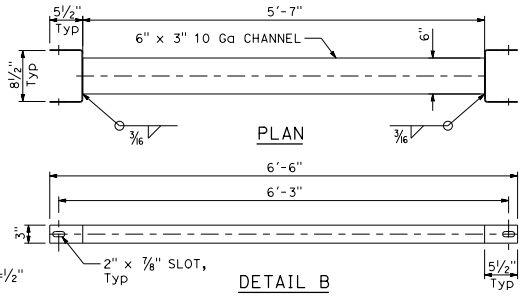

PLAN

DETAIL B

STRUT

NOTES:

1. See the Standard Plans A77P, A77Q, and A77R series for typical use of End Anchor Assembly (Type SFT-M).
2. For details of the anchor plate and ¾" cable, see Standard Plan A77S3.
3. A 6'-0" length steel foundation tube, TS 8" x 6" x 3/16", without a soil plate, may be furnished and installed in place of the 4'-6" length steel foundation tube and soil plate shown. Minimum embedment of the 6'-0" length tube shall be 5'-9". A ⅝" ø Hex head bolt and nut shall be installed in the hole in the 6'-0" length tube to keep the wood post from dropping into the tube.
4. Place End Cap Type B when pedestrians, bicycles or traffic is within contact of the trailing end of the exposed element. Rail element may be cut 1" past the end of the post. Clean, treat and remove sharp edges. See Standard Plan A77M1.
5. Increased clear distance behind the rail is required from 50' prior to the last post of the End Anchor Assembly (Type SFT-M). Beginning at 50'-0" upstream of the last post of the End Anchor Assembly, the required clear distance increases to 5'-0" at post No. 5. From post No. 5 to the last post of the End Anchor Assembly, the required clear distance increases at a rate of 1.5' for each post.
6. Dike with a maximum height of 4" may be placed under or in front of the End Anchor Assembly (Type SFT-M). If the anchor posts are in conflict with the 4" high dike, the last 25'-0" of rail may be tapered back a maximum of 1'-0" to allow the dike to maintain alignment.
7. Secure End Plate with two 16D nails to maintain orientation.
8. 2" ø standard galvanized pipe or 2⅜" ø galvanized pipe.
9. See Standard Plan A77R1 for placing SFT-M when there is a fixed object within 50'-0" of the end anchor and the distance behind the post is less than 3'-0".

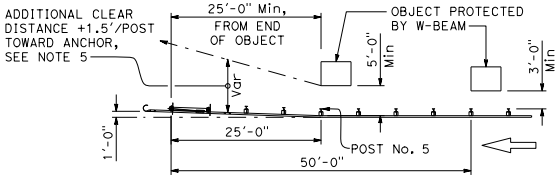

LAYOUT

STATE OF CALIFORNIA
DEPARTMENT OF TRANSPORTATION

MIDWEST GUARDRAIL SYSTEM END ANCHOR ASSEMBLY (TYPE SFT-M)

NO SCALE

A77S1

7-1-26

2026 STANDARD PLAN A77S1

Return to Table of Contents

Dist	COUNTY	ROUTE	POST MILES TOTAL PROJECT	SHEET No.	TOTAL SHEETS

Jawad Naderi
REGISTERED CIVIL ENGINEER

September 18, 2026
PLANS APPROVAL DATE

REGISTERED PROFESSIONAL ENGINEER
Mohammad Jawad Naderi
No. C96340
Exp. 9-30-26
CIVIL
STATE OF CALIFORNIA

THE STATE OF CALIFORNIA OR ITS OFFICERS OR AGENTS SHALL NOT BE RESPONSIBLE FOR THE ACCURACY OR COMPLETENESS OF SCANNED COPIES OF THIS PLAN SHEET.

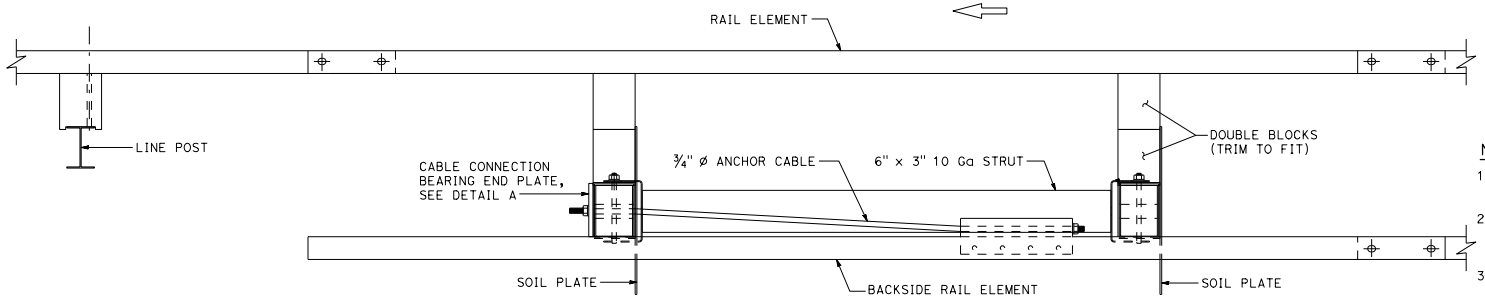

PLAN

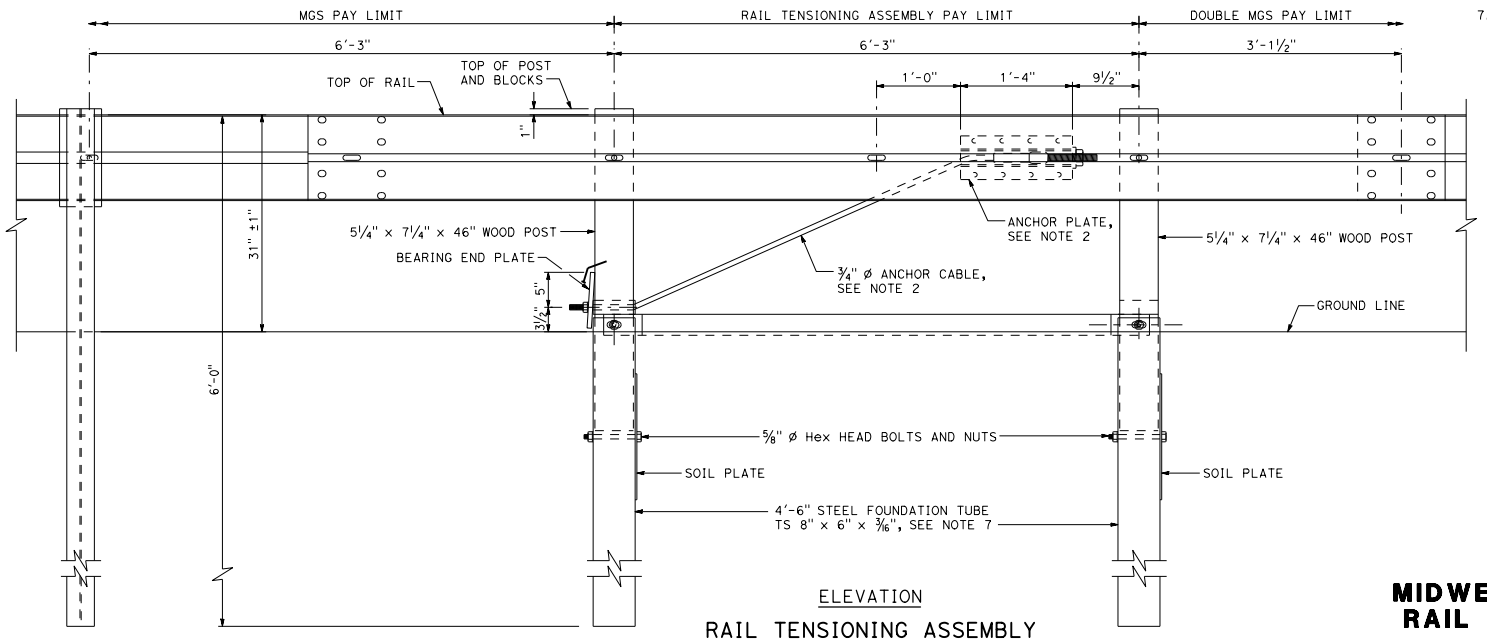

ELEVATION

RAIL TENSIONING ASSEMBLY

See Note 1

NOTES:

1. See Standard Plans A77Q3 and A77R1 for typical use of rail tensioning assembly.
2. For cable, strut, soil tube, wood post in soil tubes, and hardware or details not shown, see Standard Plans A77S1 and A77S3.
3. Nail double blocks together with 2-16D nails to resist block rotation.
4. Cable connection end plate must not be encased in HMA, concrete, or any other material that could restrict the bearing end plate from releasing.
5. Place double blocks on side that rail continues.
6. When steel line posts are used, trim double blocks to fit at rail tensioning assembly.
7. A 6'-0" length steel foundation tube, TS 8" x 6" x 3/16", without a soil plate, may be furnished and installed in place of the 4'-6" length steel foundation tube and soil plate shown. Minimum embedment of the 6'-0" length tube shall be 5'-9". A ⅝" Ø Hex head bolt and nut shall be installed in the hole in the 6'-0" length tube to keep the wood post from dropping into the tube.

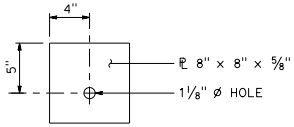

DETAIL A

CABLE CONNECTION BEARING END PLATE

STATE OF CALIFORNIA
DEPARTMENT OF TRANSPORTATION

MIDWEST GUARDRAIL SYSTEM RAIL TENSIONING ASSEMBLY

NO SCALE

A77S2

7-1-26

2026 STANDARD PLAN A77S2

Return to Table of Contents

Dist	COUNTY	ROUTE	POST MILES TOTAL PROJECT	SHEET No.	TOTAL SHEETS

Jawad Naderi
REGISTERED CIVIL ENGINEER

September 18, 2026
PLANS APPROVAL DATE

REGISTERED PROFESSIONAL ENGINEER
Mohammad Jawad Naderi
No. C96340
Exp. 9-30-26
CIVIL
STATE OF CALIFORNIA

THE STATE OF CALIFORNIA OR ITS OFFICERS OR AGENTS SHALL NOT BE RESPONSIBLE FOR THE ACCURACY OR COMPLETENESS OF SCANNED COPIES OF THIS PLAN SHEET.

NOTE:

See Standard Plans A77S1, A77S2, and A77T1 for typical use of anchor cable and anchor plate.

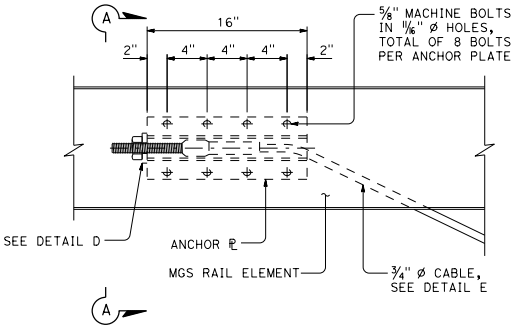

ANCHOR PLATE DETAIL
(MGS shown, TBB similar)

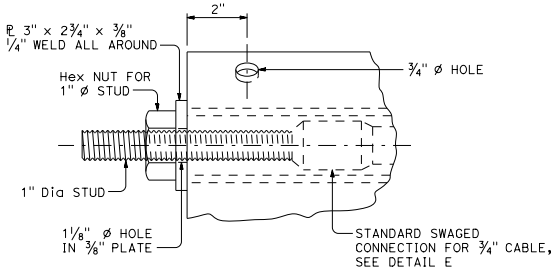

DETAIL D

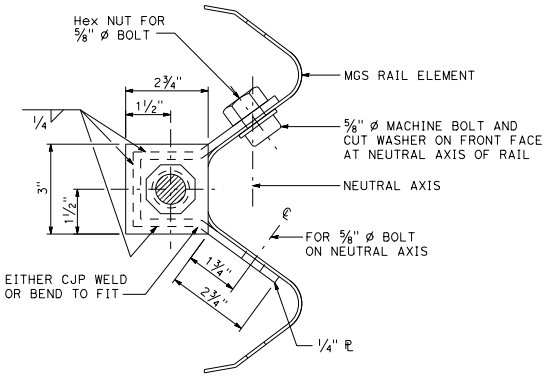

SECTION A-A

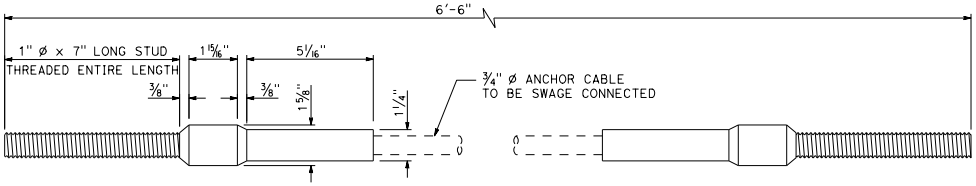

DETAIL E

ANCHOR CABLE WITH SWAGED FITTING AND STUD

STATE OF CALIFORNIA
DEPARTMENT OF TRANSPORTATION

METAL RAILING ANCHOR CABLE AND ANCHOR PLATE DETAILS

NO SCALE

A77S3

2026 STANDARD PLAN A77S3

7-1-26

Return to Table of Contents

Dist	COUNTY	ROUTE	POST MILES TOTAL PROJECT	SHEET No.	TOTAL SHEETS

Jawad Naderi
REGISTERED CIVIL ENGINEER

September 18, 2026
PLANS APPROVAL DATE

REGISTERED PROFESSIONAL ENGINEER Mohammad Jawad Naderi No. C96340 Exp. 9-30-26 CIVIL STATE OF CALIFORNIA

THE STATE OF CALIFORNIA OR ITS OFFICERS OR AGENTS SHALL NOT BE RESPONSIBLE FOR THE ACCURACY OR COMPLETENESS OF SCANNED COPIES OF THIS PLAN SHEET.

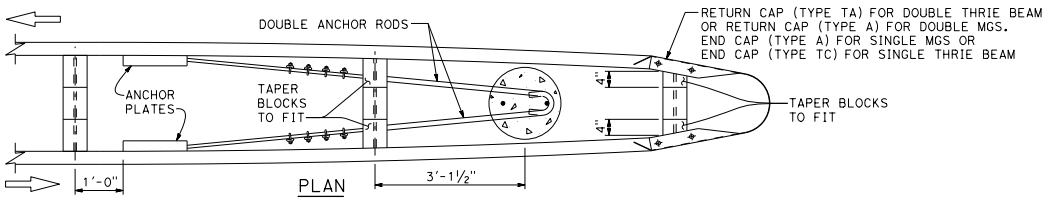

PLAN
See Note 4

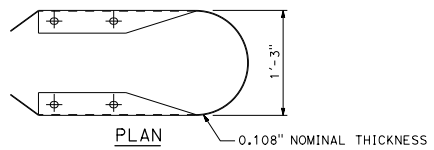

PLAN

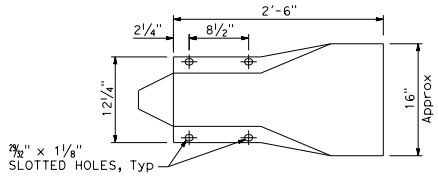

ELEVATION
RETURN CAP (TYPE A)

NOTES:

1. For typical use of this type of end anchor, see Standard Plan A78Q2.
2. Anchor cable to be parallel to railing for straight runs of rail. Anchor cable may have angle point at anchor plate if railing is curved.
3. Anchor rod hooks to be in contact with anchor reinforcement when concrete is placed. Wire ties may be used to position anchor rods.
4. Single sided railing installations require only one anchor plate, anchor rod, and anchor cable. Single sided railing will not have a rail element or blockouts on backside of line posts as shown in the plan view.

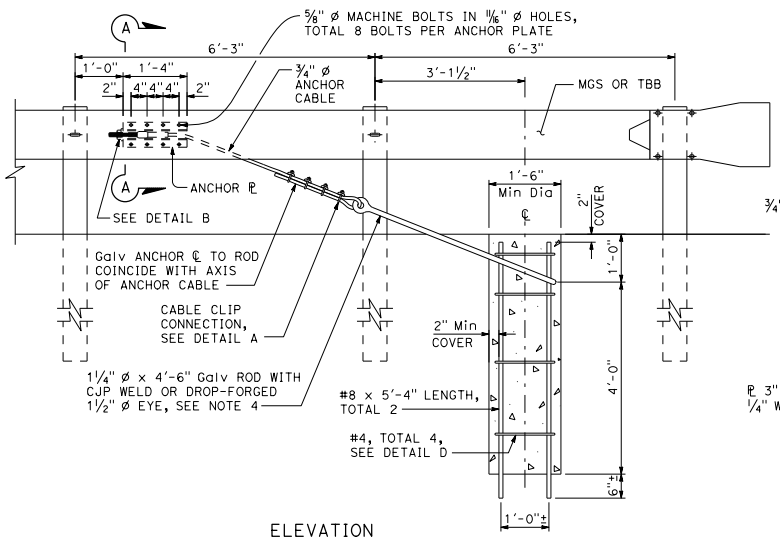

ELEVATION
END ANCHOR ASSEMBLY (TYPE CA)
Wood post, MGS shown, details similar for Thrie Beam Barrier

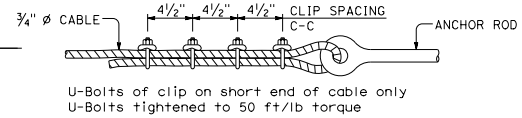

DETAIL A
CABLE CLIP CONNECTION

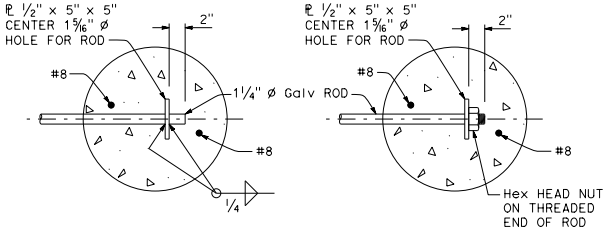

OPTIONAL ENDS ON SINGLE ANCHOR ROD
Not to be used for double anchors

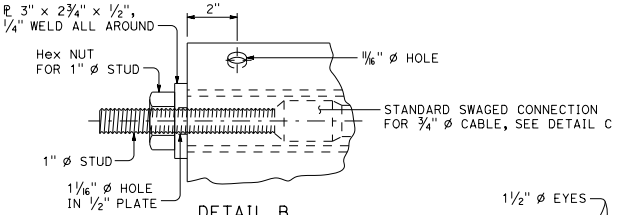

DETAIL B

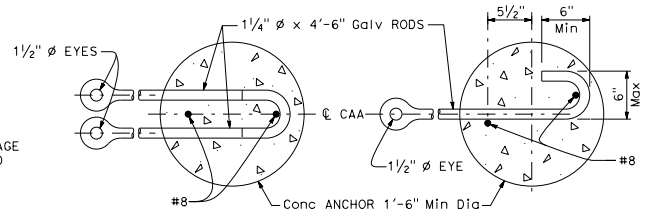

DOUBLE ANCHOR
SINGLE ANCHOR
ANCHOR RODS

NOTE:
Use two 1¼" Ø Galv rods with hook and eye for double MGS anchor.

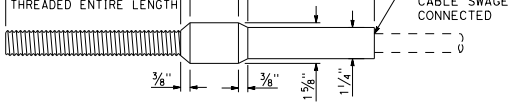

DETAIL C
ANCHOR CABLE WITH SWAGED FITTING AND STUD

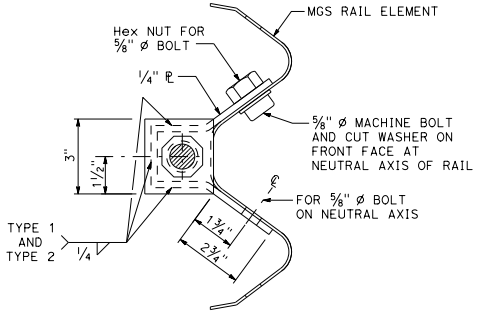

SECTION A-A
ANCHOR PLATE DETAIL

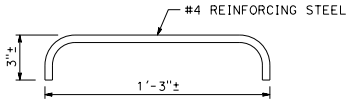

DETAIL D

STATE OF CALIFORNIA
DEPARTMENT OF TRANSPORTATION

METAL RAILING
END ANCHOR ASSEMBLY (TYPE CA)

NO SCALE

A77T1

2026 STANDARD PLAN A77T1

7-1-26

Return to Table of Contents

Dist	COUNTY	ROUTE	POST MILES TOTAL PROJECT	SHEET No.	TOTAL SHEETS

Jawad Naderi
REGISTERED CIVIL ENGINEER

September 18, 2026
PLANS APPROVAL DATE

REGISTERED PROFESSIONAL ENGINEER Mohammad Jawad Naderi No. C96340 Exp. 9-30-26 CIVIL STATE OF CALIFORNIA

THE STATE OF CALIFORNIA OR ITS OFFICERS OR AGENTS SHALL NOT BE RESPONSIBLE FOR THE ACCURACY OR COMPLETENESS OF SCANNED COPIES OF THIS PLAN SHEET.

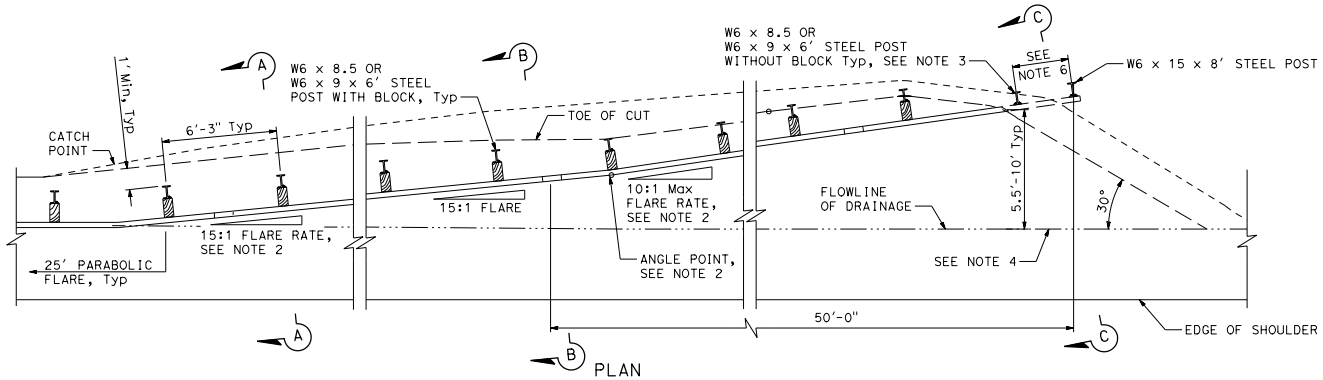

PLAN

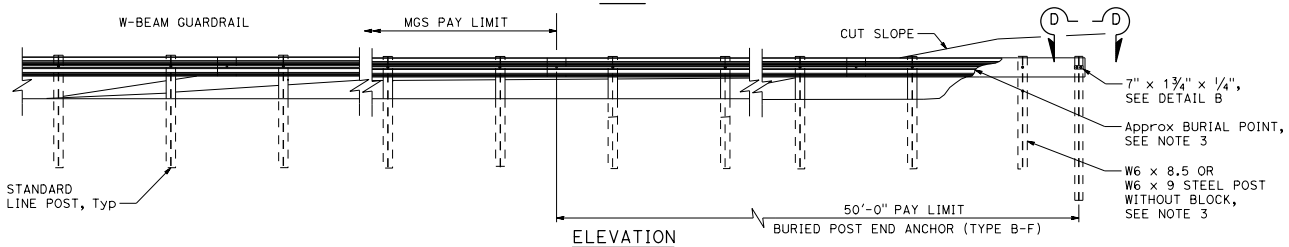

ELEVATION
(PROFILE ALONG RAIL)

BURIED POST END ANCHOR (TYPE B-F)

NOTES:

1. The buried end anchor for flat slopes (Type B-F) should be installed on slopes between 3:1 and 2:1. Where slopes are steeper than 2:1, use Standard Plan A77T3 buried end anchor for steep slopes (Type B-S).
2. Maximum flare rate of guardrail should be 15:1 based on ETW. The flare rate can be increased up to 10:1 once the toe of cut slope behind the guardrail intersects the back of the guardrail post.
3. Do not place blocks on posts where blocks are in contact with soil. Bolt element directly to the post.
4. For dike details, see Standard Plan A77N4.
5. Elevation of the guardrail should follow the grade of the shoulder within 1'-0" from face of the rail, see Section B-B. Slope for elevation will be determined by the Engineer.
6. W6 x 15 x 8'-0" anchor post with hardware may be shifted up to 3'-1½" from end if authorized.
7. Details not shown for dike and slope treatment.
8. Typical guardrail shown with steel post. Excluding W6 x 15 steel anchor post, wood post may be used when specified.

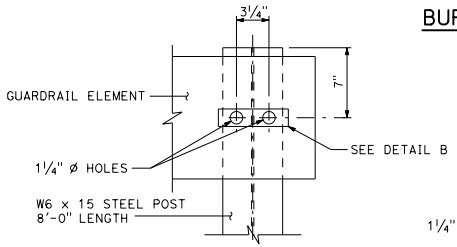

DETAIL A

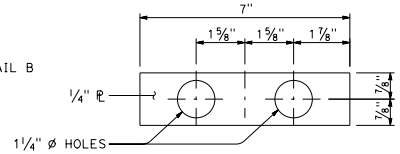

DETAIL B

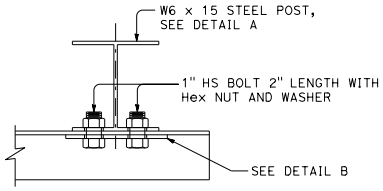

SECTION D-D

ANCHOR POST DETAIL

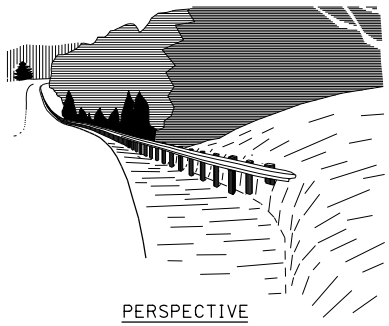

PERSPECTIVE

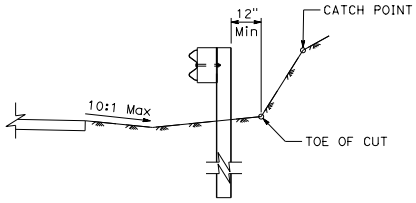

SECTION A-A

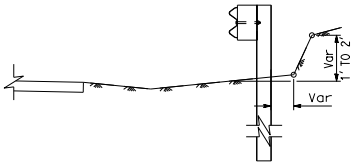

SECTION B-B

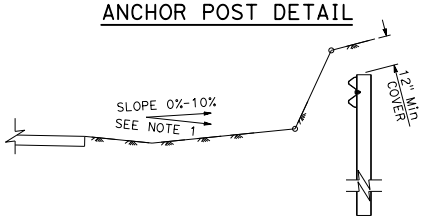

SECTION C-C

STATE OF CALIFORNIA
DEPARTMENT OF TRANSPORTATION

MIDWEST GUARDRAIL SYSTEM
BURIED POST END ANCHOR (TYPE B-F)

NO SCALE

A77T2

2026 STANDARD PLAN A77T2

7-1-26

Return to Table of Contents

Dist	COUNTY	ROUTE	POST MILES TOTAL PROJECT	SHEET No.	TOTAL SHEETS

Jawad Naderi
REGISTERED CIVIL ENGINEER

September 18, 2026
PLANS APPROVAL DATE

REGISTERED PROFESSIONAL ENGINEER
Mohammad Jawad Naderi
No. C96340
Exp. 9-30-26
CIVIL
STATE OF CALIFORNIA

THE STATE OF CALIFORNIA OR ITS OFFICERS OR AGENTS SHALL NOT BE RESPONSIBLE FOR THE ACCURACY OR COMPLETENESS OF SCANNED COPIES OF THIS PLAN SHEET.

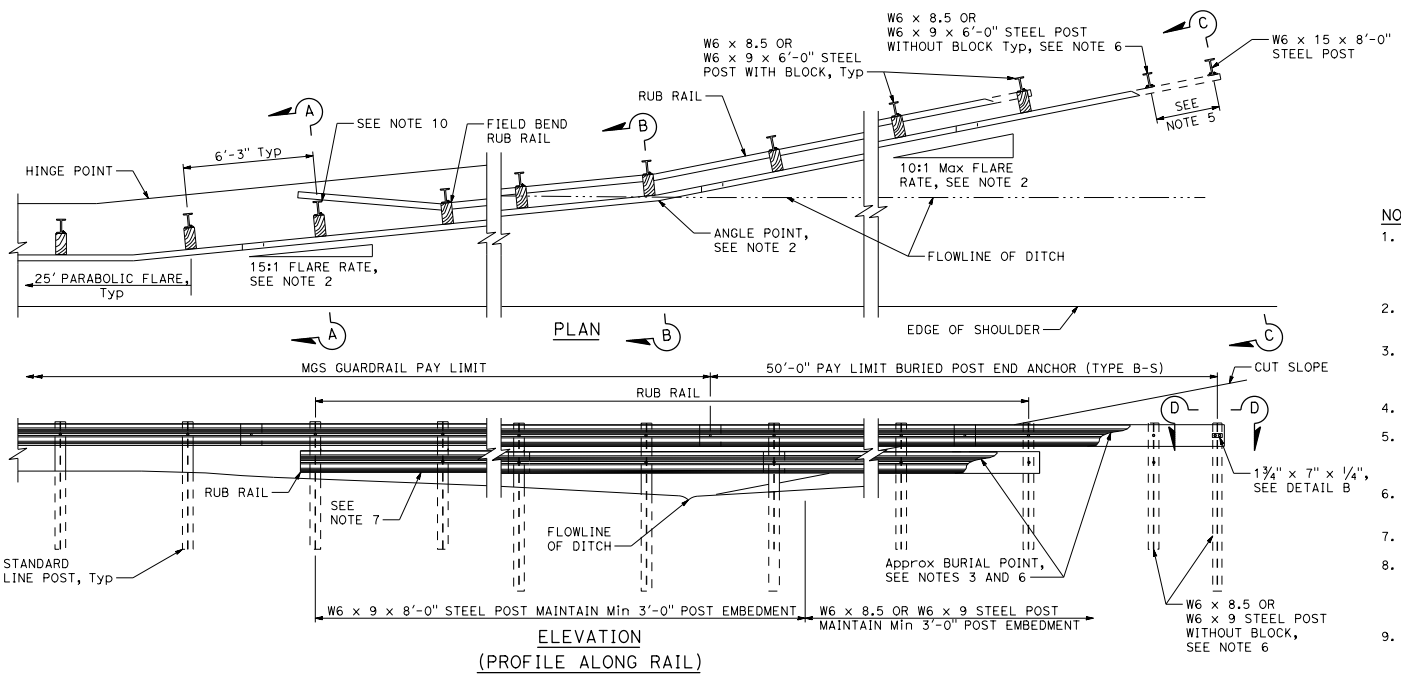

ELEVATION
(PROFILE ALONG RAIL)

BUREIED POST END ANCHOR (TYPE B-S)

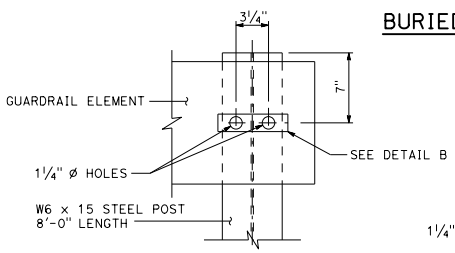

DETAIL A

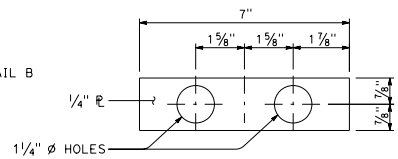

DETAIL B

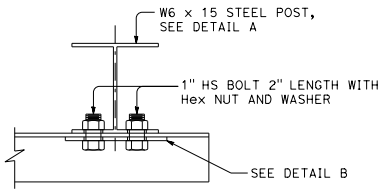

SECTION D-D

ANCHOR POST DETAIL

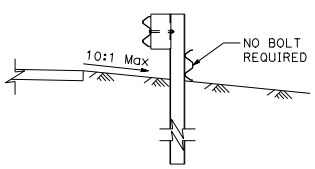

SECTION A-A

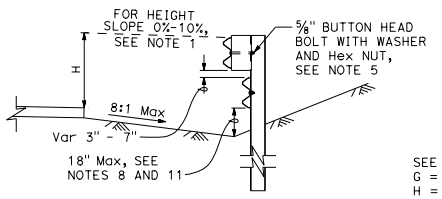

SECTION B-B

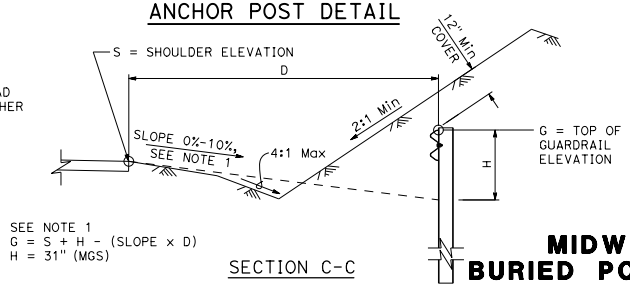

SECTION C-C

NOTES:

1. The buried end anchor for steep slopes (Type B-S) should be installed on a 2:1 or steeper slope. Where slopes are 3:1 to 2:1, use Buried End Anchor (Type B-F), see Standard Plan A77T2.
2. Top of guardrail elevation should be no greater than the differential of a 10% shoulder grade, see Note 8.
3. Maximum flare rate of guardrail from the shoulder to the flowline is 15:1 based on ETW. Flare rate can be increased up to 10:1 after crossing the ditch flowline.
4. No Blocks on post where blocks are in contact with soil.
5. W6 x 15 x 8'-0" steel anchor post and hardware may be shifted up to 3'-1½" with minimum 12" cover and maintain minimum post spacing from end if authorized.
6. Do not place blocks on post where blocks are in contact with soil.
7. Use standard guardrail elements with no blocks for rub rail.
8. Begin rub rail when the height of the guardrail is more than 34" above the ground directly below the rail. Holes cut through flange of steel post shall be ¾" Ø and on the trailing side of post.
9. Continue rub rail until the top of rub rail is buried in the backslope.
10. On one way roadways at departure end, rub rail may remain on traffic side of post.
11. Rub rail shall be 6" minimum to 18" maximum above flowline to not restrict flow. Height will be determined by the Engineer.
12. Splice rub rail elements at posts using rail element splice detail and keep rub rail parallel with MGS.

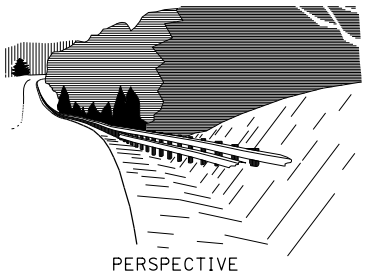

PERSPECTIVE

STATE OF CALIFORNIA
DEPARTMENT OF TRANSPORTATION

MIDWEST GUARDRAIL SYSTEM
BURIED POST END ANCHOR (TYPE B-S)

NO SCALE

A77T3

2026 STANDARD PLAN A77T3

7-1-26

Return to Table of Contents

Dist	COUNTY	ROUTE	POST MILES TOTAL PROJECT	SHEET No.	TOTAL SHEETS

R. Radhika
REGISTERED CIVIL ENGINEER

September 18, 2026
PLANS APPROVAL DATE

REGISTERED PROFESSIONAL ENGINEER
Radhika Mothkuri
No. C95984
Exp. 6-30-28
CIVIL
STATE OF CALIFORNIA

THE STATE OF CALIFORNIA OR ITS OFFICERS OR AGENTS SHALL NOT BE RESPONSIBLE FOR THE ACCURACY OR COMPLETENESS OF SCANNED COPIES OF THIS PLAN SHEET.

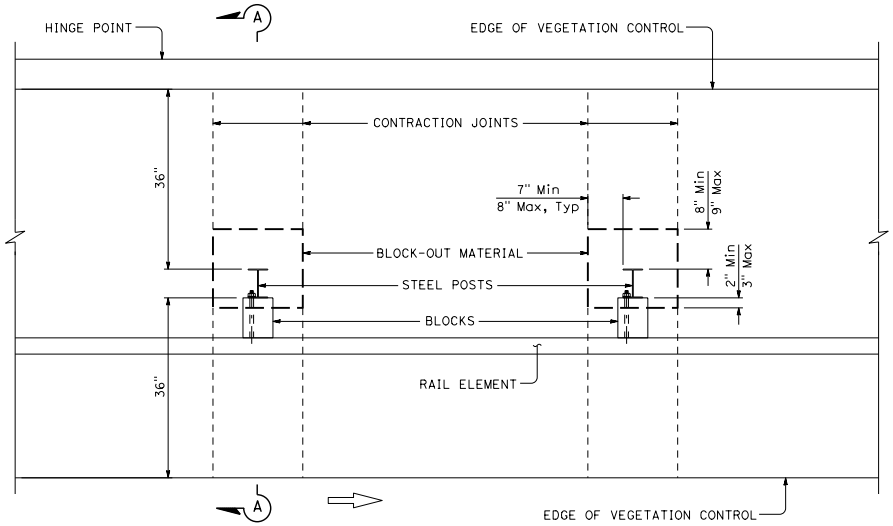

PLAN

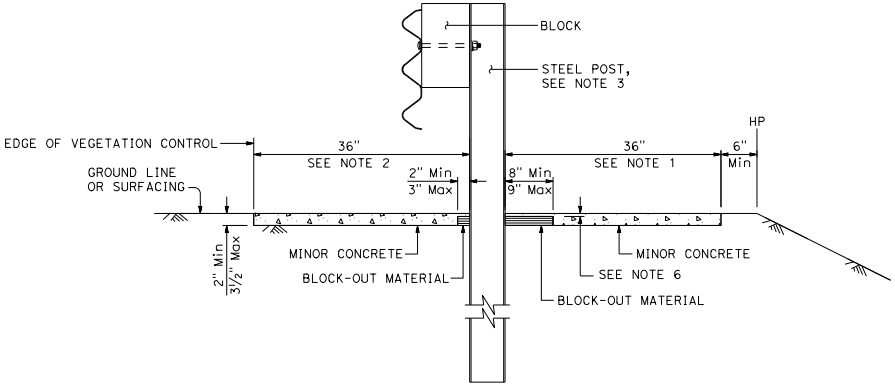

SECTION A-A

NOTES:

1. Where the distance between back of post and hinge point is less than 42", construct vegetation control to 6" from hinge point while maintaining the 8" block-out at back of post. Use the detail on Standard Plan A77N5A when the distance from the back of post to the hinge point is less than 15".
2. Where dike is constructed under barrier, construct vegetation control to back edge of dike. Where paved shoulder is constructed within 36" in front of the post, construct vegetation control to the edge of paved shoulder.
3. For steel post sizes, see Standard Plan A78M3.
4. For details not shown, see Standard Plans A78M1 and A78M2.
5. This plan for vegetation control installation only.
6. Concrete over block-out material depth, ⅜" Min to ⅝" Max.

STATE OF CALIFORNIA
DEPARTMENT OF TRANSPORTATION

MINOR CONCRETE VEGETATION CONTROL SINGLE THRIE BEAM BARRIER

NO SCALE

A78C3

2026 STANDARD PLAN A78C3

7-1-26

Return to Table of Contents

Dist	COUNTY	ROUTE	POST MILES TOTAL PROJECT	SHEET No.	TOTAL SHEETS

REGISTERED CIVIL ENGINEER

September 18, 2026

PLANS APPROVAL DATE

REGISTERED PROFESSIONAL ENGINEER Radhika Mothkuri No. C95984 Exp. 6-30-28 CIVIL STATE OF CALIFORNIA

THE STATE OF CALIFORNIA OR ITS OFFICERS OR AGENTS SHALL NOT BE RESPONSIBLE FOR THE ACCURACY OR COMPLETENESS OF SCANNED COPIES OF THIS PLAN SHEET.

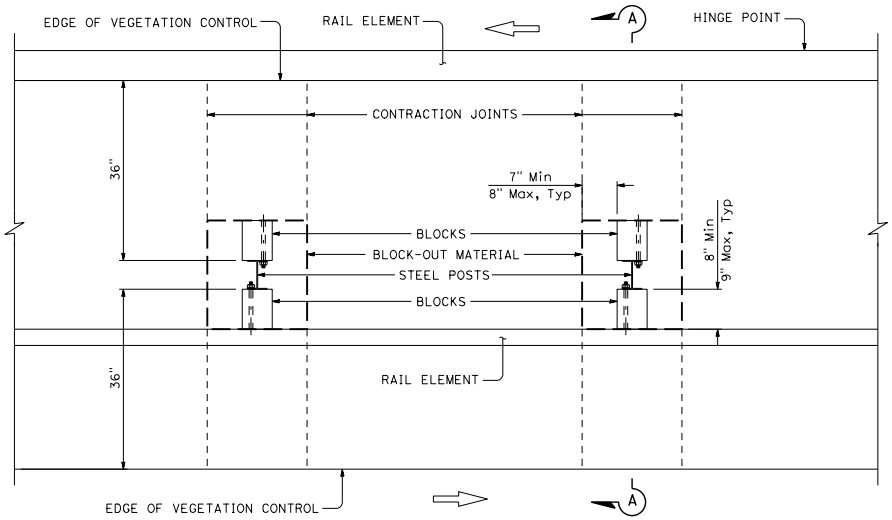

PLAN

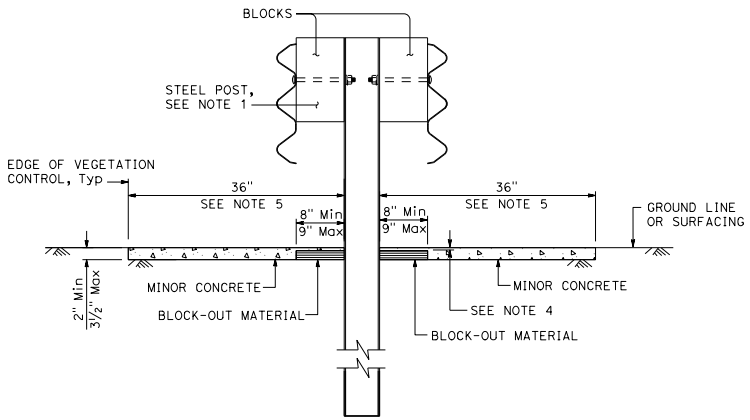

SECTION A-A

NOTES:

1. For steel post sizes, see Standard Plan A78M3.
2. For details not shown, see Standard Plans A78M1 and A78M2.
3. This plan for vegetation control installation only.
4. Concrete over block-out material depth, ⅜" Min to ⅝" Max.
5. Vegetation control must not conflict with drainage facilities.

STATE OF CALIFORNIA
DEPARTMENT OF TRANSPORTATION

MINOR CONCRETE VEGETATION CONTROL DOUBLE THRIE BEAM BARRIER

NO SCALE

A78C4

2026 STANDARD PLAN A78C4

7-1-26

Return to Table of Contents

Dist	COUNTY	ROUTE	POST MILES TOTAL PROJECT	SHEET No.	TOTAL SHEETS

REGISTERED CIVIL ENGINEER

September 18, 2026

PLANS APPROVAL DATE

REGISTERED PROFESSIONAL ENGINEER Radhika Mothkuri No. C95984 Exp. 6-30-28 CIVIL STATE OF CALIFORNIA

THE STATE OF CALIFORNIA OR ITS OFFICERS OR AGENTS SHALL NOT BE RESPONSIBLE FOR THE ACCURACY OR COMPLETENESS OF SCANNED COPIES OF THIS PLAN SHEET.

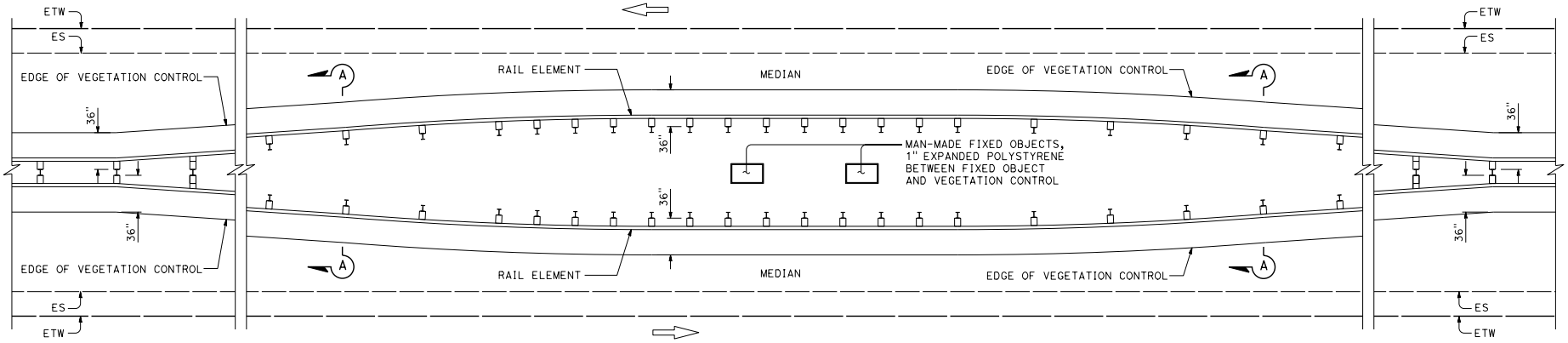

PLAN

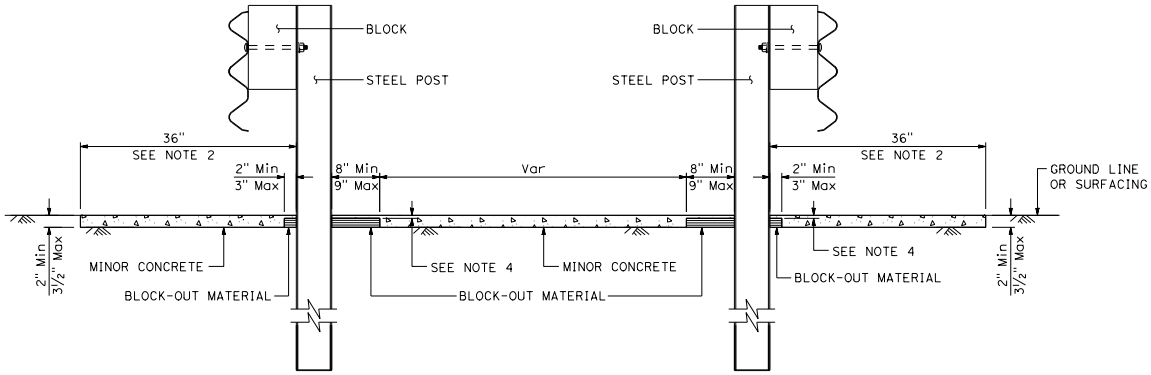

SECTION A-A

NOTES:

1. See Standard Plan A78C4 for additional vegetation control.
2. Where dike is constructed under barrier, construct vegetation control to back edge of dike. Where paved shoulder is constructed within 36" in front of the post, construct vegetation control to the edge of paved shoulder.
3. This plan for vegetation control installation only.
4. Concrete over block-out material depth, ⅜" Min to ⅝" Max.

STATE OF CALIFORNIA
DEPARTMENT OF TRANSPORTATION

MINOR CONCRETE VEGETATION CONTROL THRIE BEAM BARRIER AT FIXED OBJECTS IN MEDIAN

NO SCALE

A78C5

2026 STANDARD PLAN A78C5

7-1-26

Return to Table of Contents

Dist	COUNTY	ROUTE	POST MILES TOTAL PROJECT	SHEET No.	TOTAL SHEETS

REGISTERED CIVIL ENGINEER

September 18, 2026

PLANS APPROVAL DATE

REGISTERED PROFESSIONAL ENGINEER Radhika Mothkuri No. C95984 Exp. 6-30-28 CIVIL STATE OF CALIFORNIA

THE STATE OF CALIFORNIA OR ITS OFFICERS OR AGENTS SHALL NOT BE RESPONSIBLE FOR THE ACCURACY OR COMPLETENESS OF SCANNED COPIES OF THIS PLAN SHEET.

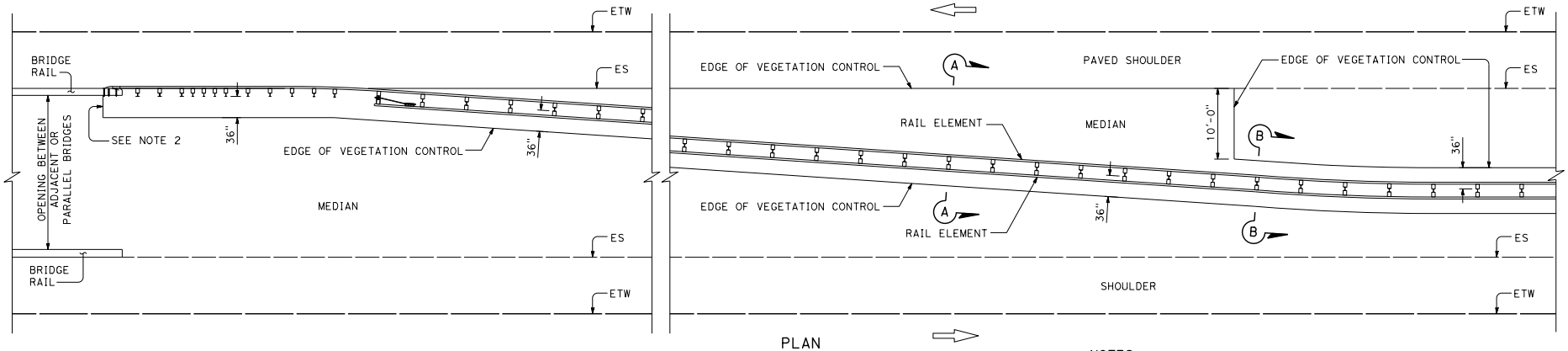

PLAN

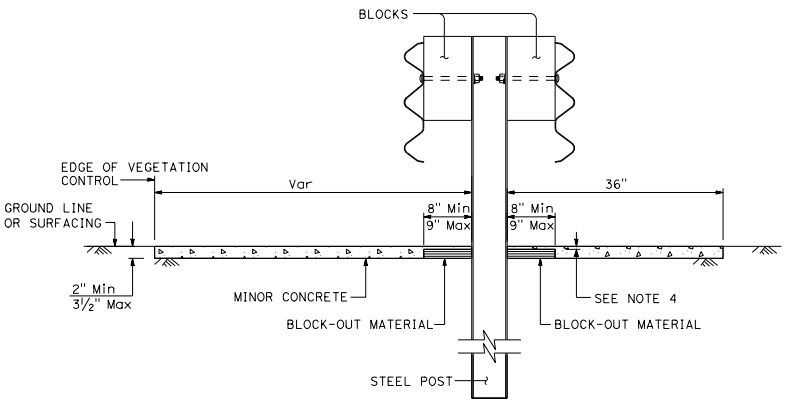

SECTION A-A

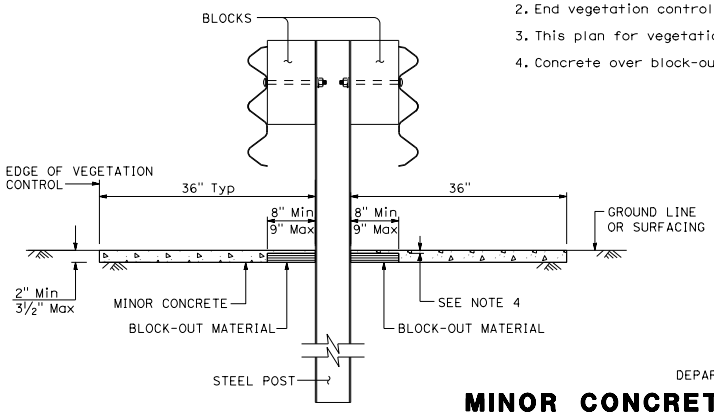

SECTION B-B

NOTES:

1. See Standard Plan A78C4 for additional vegetation control details.
2. End vegetation control at end of rail element attached to bridge railing.
3. This plan for vegetation control installation only.
4. Concrete over block-out material depth, ⅜" Min to ⅝" Max.

STATE OF CALIFORNIA
DEPARTMENT OF TRANSPORTATION

MINOR CONCRETE VEGETATION CONTROL THRIE BEAM BARRIER AT STRUCTURE APPROACH

NO SCALE

A78C6

2026 STANDARD PLAN A78C6

7-1-26

Return to Table of Contents

Dist	COUNTY	ROUTE	POST MILES TOTAL PROJECT	SHEET No.	TOTAL SHEETS

REGISTERED CIVIL ENGINEER

September 18, 2026
PLANS APPROVAL DATE

REGISTERED PROFESSIONAL ENGINEER
Radhika Mothkuri
No. C95984
Exp. 6-30-28
CIVIL
STATE OF CALIFORNIA

THE STATE OF CALIFORNIA OR ITS OFFICERS OR AGENTS SHALL NOT BE RESPONSIBLE FOR THE ACCURACY OR COMPLETENESS OF SCANNED COPIES OF THIS PLAN SHEET.

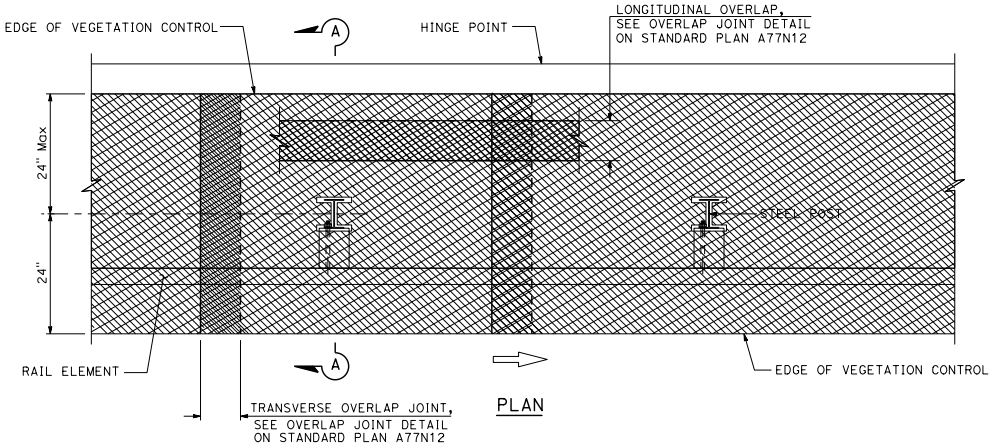

PLAN

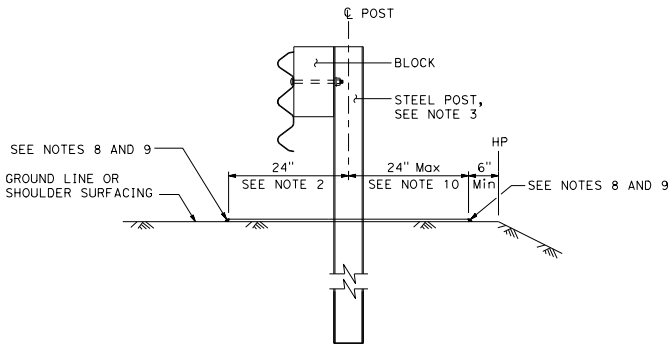

SECTION A-A

NOTES:

1. For additional vegetation control details, see Standard Plan A77N12.
2. Where dike is constructed under barrier, construct vegetation control to back edge of dike. Where paved shoulder is constructed within 24" of the post center, construct vegetation control to the edge of paved shoulder.
3. For steel post sizes, see Standard Plan A78M3.
4. For details not shown, see Standard Plans A78M1 and A78M2.
5. This plan for vegetation control installation only.
6. Vegetation control must slope in direction of water flow.
7. Place transverse and longitudinal overlap joint within the limits of vegetation control where applicable.
8. Caulk longitudinal and transverse edges of vegetation control mat where it abuts to paved surface or man-made fixed objects, except guardrail posts.
9. Where vegetation control is adjacent to a dike, see details on Standard Plan A77N12.
10. Where the distance between center of post and hinge point is 30" or less, construct vegetation control to 6" from the hinge point. For narrow installation, see Standard Plan A77N13.

STATE OF CALIFORNIA
DEPARTMENT OF TRANSPORTATION

FIBER OR RUBBER MAT VEGETATION CONTROL SINGLE THRIE BEAM BARRIER

NO SCALE

A78C7

2026 STANDARD PLAN A78C7

7-1-26

Return to Table of Contents

Dist	COUNTY	ROUTE	POST MILES TOTAL PROJECT	SHEET No.	TOTAL SHEETS

REGISTERED CIVIL ENGINEER

September 18, 2026
PLANS APPROVAL DATE

REGISTERED PROFESSIONAL ENGINEER
Radhika Mothkuri
No. C95984
Exp. 6-30-28
CIVIL
STATE OF CALIFORNIA

THE STATE OF CALIFORNIA OR ITS OFFICERS OR AGENTS SHALL NOT BE RESPONSIBLE FOR THE ACCURACY OR COMPLETENESS OF SCANNED COPIES OF THIS PLAN SHEET.

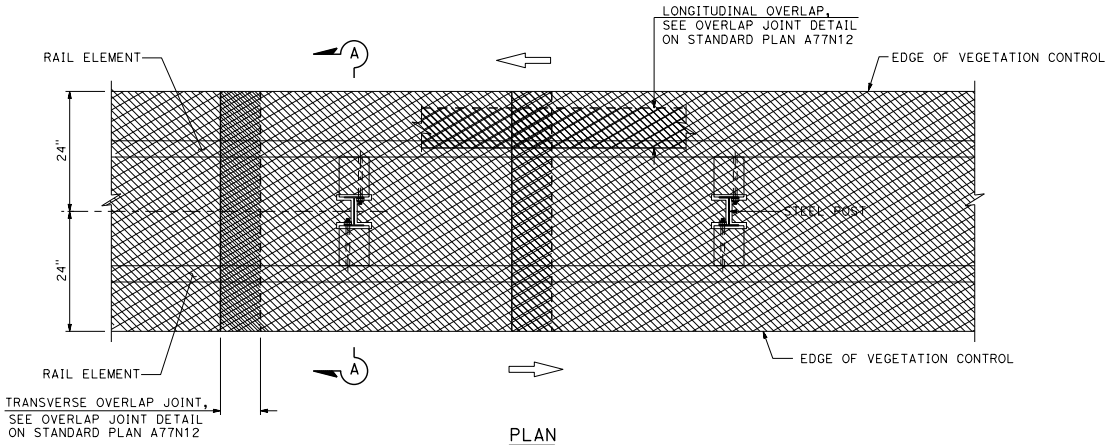

PLAN

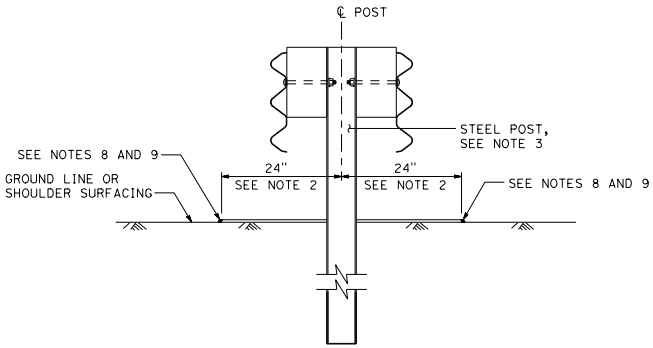

SECTION A-A

NOTES:

1. For additional vegetation control details, see Standard Plan A77N12.
2. Where dike is constructed under barrier, construct vegetation control to back edge of dike. Where paved shoulder is constructed within 24" of the post center, construct vegetation control to the edge of paved shoulder.
3. For steel post sizes, see Standard Plan A78M3.
4. For details not shown, see Standard Plans A78M1 and A78M2.
5. This plan for vegetation control installation only.
6. Vegetation control must slope in direction of water flow.
7. Place transverse and longitudinal overlap joint within the limits of vegetation control where applicable.
8. Caulk longitudinal and transverse edges of vegetation control mat where it abuts to paved surface or man-made fixed objects, except guardrail posts.
9. Where vegetation control is adjacent to a dike, see details on Standard Plan A77N12.

STATE OF CALIFORNIA
DEPARTMENT OF TRANSPORTATION

FIBER OR RUBBER MAT VEGETATION CONTROL DOUBLE THRIE BEAM BARRIER

NO SCALE

A78C8

2026 STANDARD PLAN A78C8

7-1-26

Return to Table of Contents

Dist	COUNTY	ROUTE	POST MILES TOTAL PROJECT	SHEET No.	TOTAL SHEETS

REGISTERED CIVIL ENGINEER

September 18, 2026
PLANS APPROVAL DATE

REGISTERED PROFESSIONAL ENGINEER
Radhika Mothkuri
No. C95984
Exp. 6-30-28
CIVIL
STATE OF CALIFORNIA

THE STATE OF CALIFORNIA OR ITS OFFICERS OR AGENTS SHALL NOT BE RESPONSIBLE FOR THE ACCURACY OR COMPLETENESS OF SCANNED COPIES OF THIS PLAN SHEET.

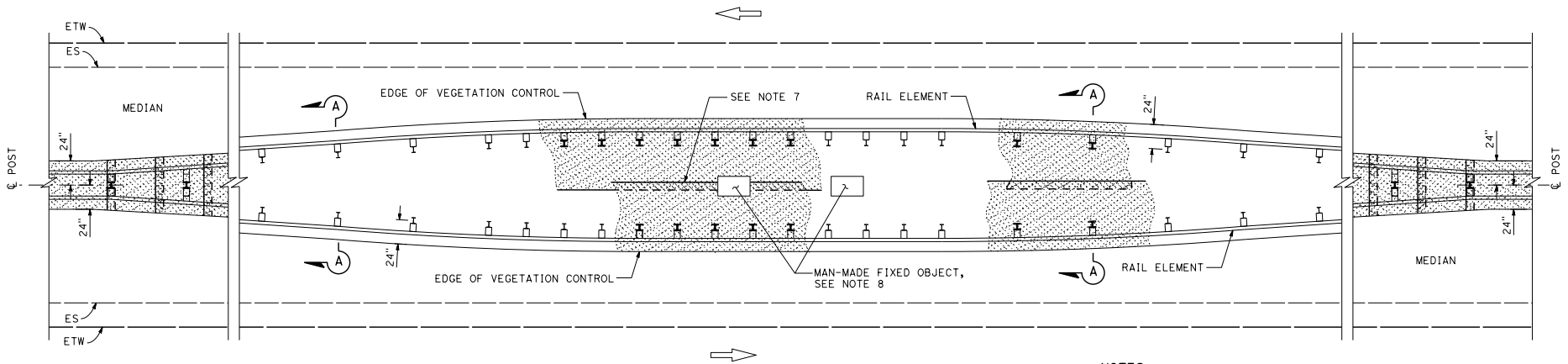

PLAN

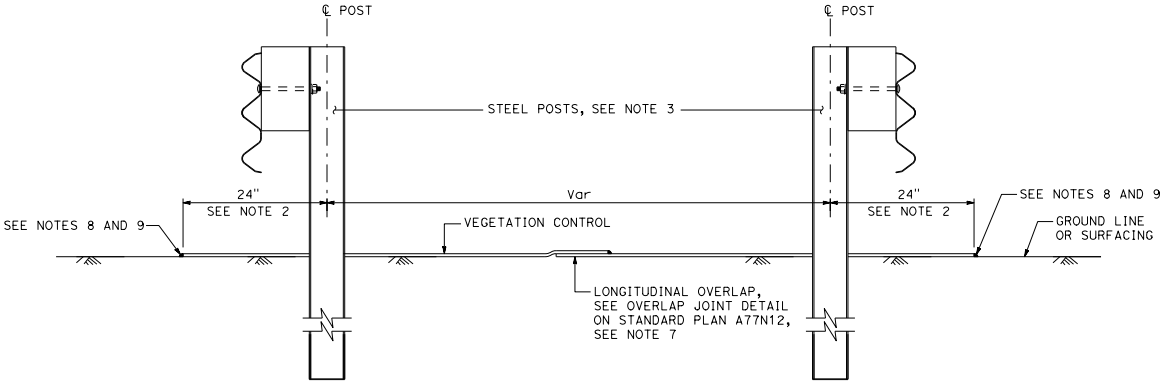

SECTION A-A

NOTES:

1. For additional vegetation control details, see Standard Plan A77N12.
2. Where dike is constructed under barrier, construct vegetation control to back edge of dike. Where paved shoulder is constructed within 24" of the post center, construct vegetation control to the edge of paved shoulder.
3. For steel post sizes, see Standard Plan A78M3.
4. For details not shown, see Standard Plans A78M1 and A78M2.
5. This plan for vegetation control installation only.
6. Vegetation control must slope in direction of water flow.
7. Place transverse and longitudinal overlap joint within the limits of vegetation control where applicable.
8. Caulk longitudinal and transverse edges of vegetation control mat where it abuts to paved surface or man-made fixed objects, except guardrail posts.
9. Where vegetation control is adjacent to a dike, see details on Standard Plan A77N12.

STATE OF CALIFORNIA
DEPARTMENT OF TRANSPORTATION

FIBER OR RUBBER MAT VEGETATION CONTROL THRIE BEAM BARRIER AT FIXED OBJECTS IN MEDIAN

NO SCALE

A78C9

2026 STANDARD PLAN A78C9

7-1-26

Return to Table of Contents

Dist	COUNTY	ROUTE	POST MILES TOTAL PROJECT	SHEET No.	TOTAL SHEETS

REGISTERED CIVIL ENGINEER

September 18, 2026
PLANS APPROVAL DATE

REGISTERED PROFESSIONAL ENGINEER
Radhika Mothkuri
No. C95984
Exp. 6-30-28
CIVIL
STATE OF CALIFORNIA

THE STATE OF CALIFORNIA OR ITS OFFICERS OR AGENTS SHALL NOT BE RESPONSIBLE FOR THE ACCURACY OR COMPLETENESS OF SCANNED COPIES OF THIS PLAN SHEET.

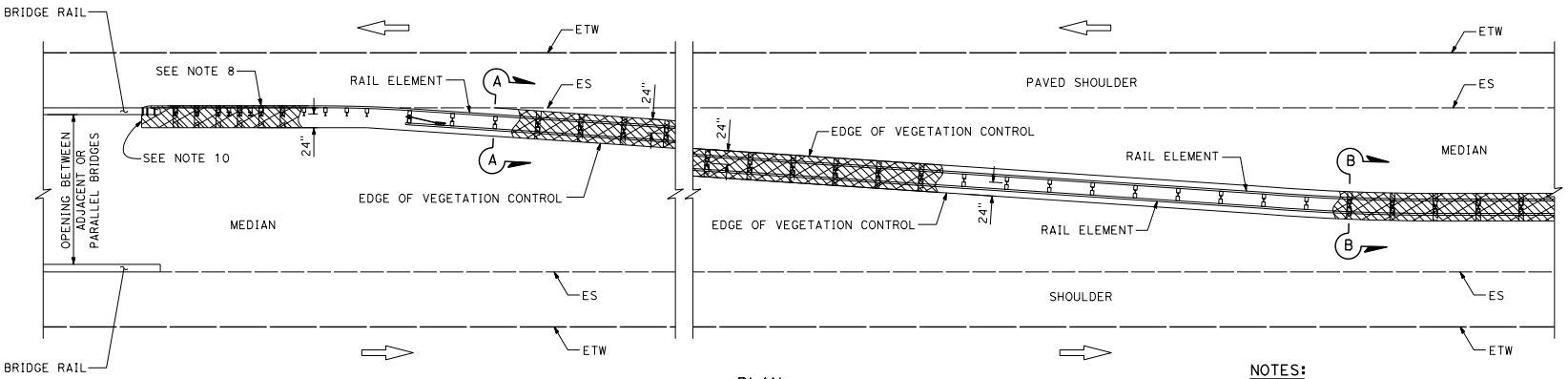

PLAN

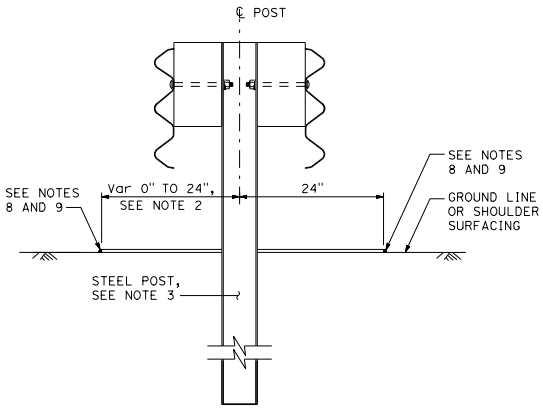

SECTION A-A

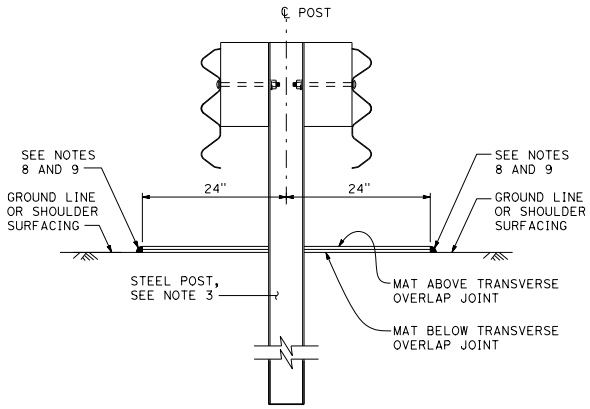

SECTION B-B

NOTES:

1. For additional vegetation control details, see Standard Plan A77N12.
2. Where dike is constructed under barrier, construct vegetation control to back edge of dike. Where paved shoulder is constructed within 24" of the post center, construct vegetation control to the edge of paved shoulder.
3. For steel post sizes, see Standard Plan A78M3.
4. For details not shown, see Standard Plans A78M1 and A78M2.
5. This plan for vegetation control installation only.
6. Vegetation control must slope in direction of water flow.
7. Place longitudinal and transverse overlap joint within the limits of vegetation control where applicable.
8. Caulk longitudinal and transverse edges of vegetation control mat where it abuts to paved surface or man-made fixed objects, except guardrail posts.
9. Where vegetation control is adjacent to a dike, see details on Standard Plan A77N12.
10. End vegetation control at end of rail element attached to bridge railing.

STATE OF CALIFORNIA
DEPARTMENT OF TRANSPORTATION

FIBER OR RUBBER MAT VEGETATION CONTROL THRIE BEAM BARRIER AT STRUCTURE APPROACH

NO SCALE

A78C10

2026 STANDARD PLAN A78C10

7-1-26

Return to Table of Contents

Dist	COUNTY	ROUTE	POST MILES TOTAL PROJECT	SHEET No.	TOTAL SHEETS

Jawad Naderi
REGISTERED CIVIL ENGINEER

September 18, 2026
PLANS APPROVAL DATE

REGISTERED PROFESSIONAL ENGINEER Mohammad Jawad Naderi No. C96340 Exp. 9-30-26 CIVIL STATE OF CALIFORNIA

THE STATE OF CALIFORNIA OR ITS OFFICERS OR AGENTS SHALL NOT BE RESPONSIBLE FOR THE ACCURACY OR COMPLETENESS OF SCANNED COPIES OF THIS PLAN SHEET.

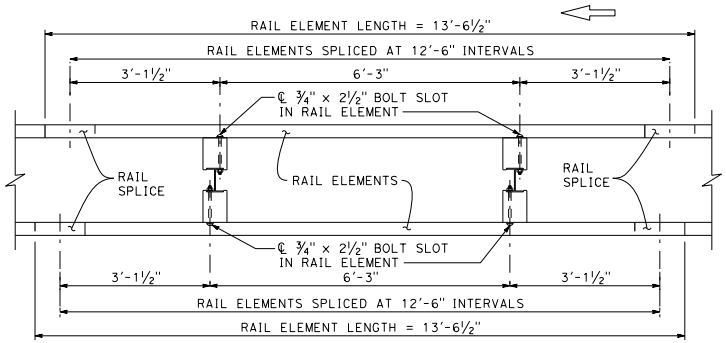

PLAN

DOUBLE THRIE BEAM BARRIER (TYPE M)

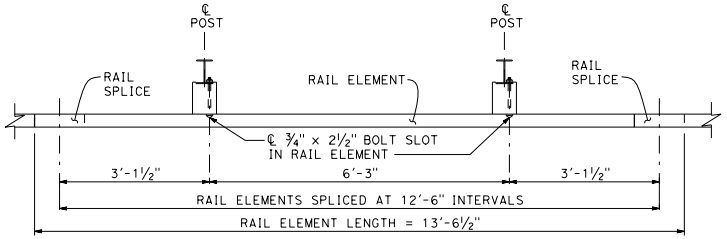

PLAN

SINGLE THRIE BEAM BARRIER (TYPE M)

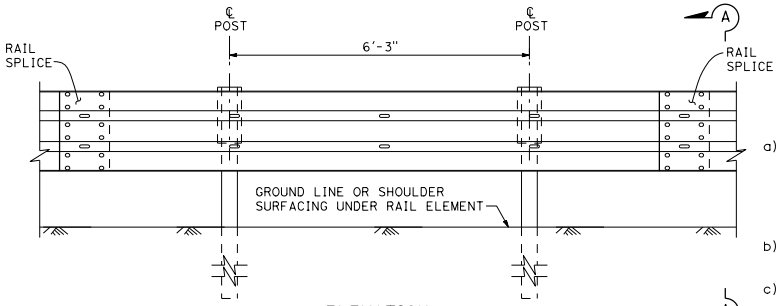

ELEVATION

SINGLE/DOUBLE THRIE BEAM BARRIER (TYPE M)

Steel post with notched wood or notched plastic blocks.

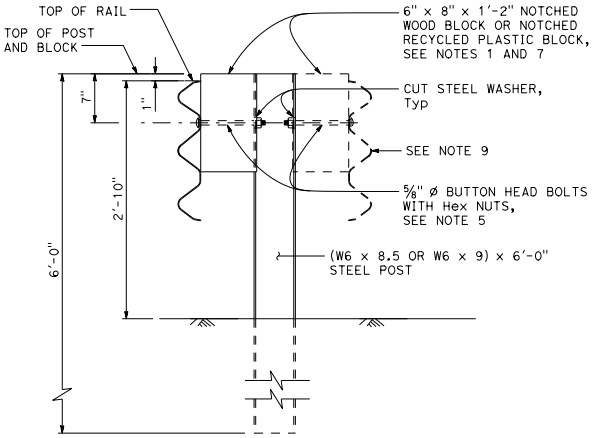

SECTION A-A

TYPICAL STEEL LINE POST INSTALLATION SINGLE/DOUBLE THRIE BEAM BARRIER (TYPE M)

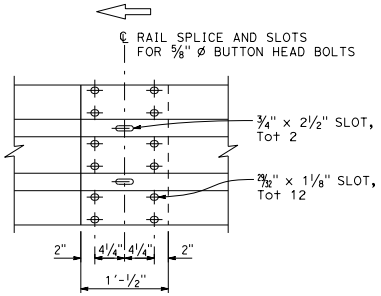

ELEVATION

RAIL ELEMENT SPLICE DETAIL

a) Connect the overlapped ends of the thrie beam rail elements with ⅝" ø x 1¼" button head oval shoulder bolts inserted into the 29/32" x 1⅛" slots and bolted together with ⅝" ø recessed hex nuts. Recess of hex nut points toward rail element. A total of 12 bolts and nuts are to be used at each rail splice connection.

b) The ends of the rail elements are to be overlapped in the direction of traffic, see details.

c) Use splice bolts and nuts in all splice holes of the end cap or return cap when attaching the end cap or return cap to the end of rail element.

NOTES:

1. For details of standard hardware, posts and blocks used to construct thrie beam barrier, see Standard Plans A78M2 and A78M3.
2. Thrie beam barrier post spacing to be 6'-3" center to center, except as otherwise noted.
3. Top of barrier rail to be 2'-10" above ground line or shoulder surfacing under the rail element.
4. For barrier end treatments and barrier connections, see Standard Plans A78P1 and A78Q1,
5. Attach rail element to block and steel post with 1 bolt on approaching traffic side of post flange. For double thrie beam, use 1 bolt for connecting each side of post.
6. For details of thrie beam barrier (Type M) at fixed objects, see Standard Plan A78Q3.
7. Notched face of block faces steel post.
8. Install posts in soil.
9. Thrie Beam Barrier (Type M) can be placed as single or double Thrie Beam Barrier (Type M).
10. Thrie Beam Barrier (Type M) may be used either notched wood or notched plastic blocks.

STATE OF CALIFORNIA
DEPARTMENT OF TRANSPORTATION

THRIE BEAM BARRIER (TYPE M) STANDARD BARRIER RAILING SECTION

NO SCALE

A78M1

2026 STANDARD PLAN A78M1

7-1-26

Return to Table of Contents

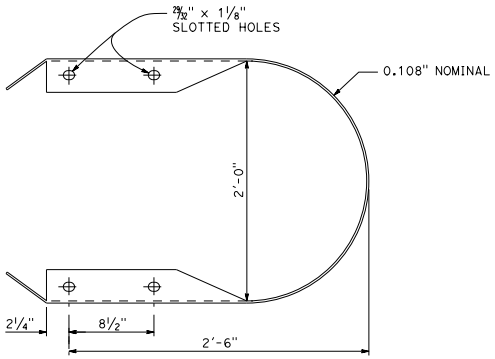

RETURN CAP (TYPE TA)

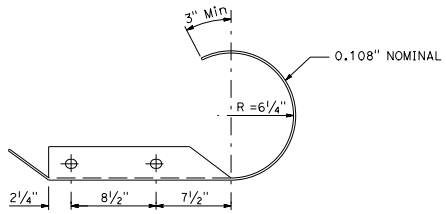

PLAN

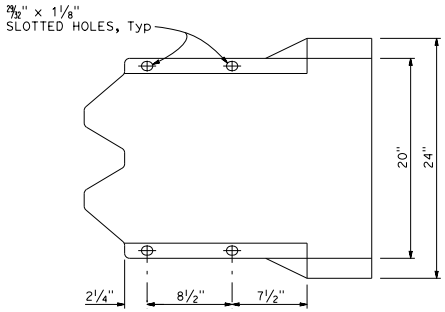

ELEVATION

RETURN CAP (TYPE TR)

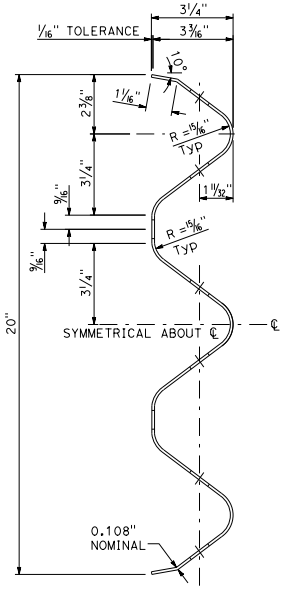

SECTION VIEW
OF RAIL ELEMENT

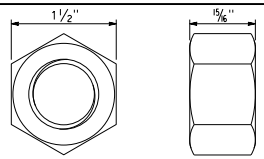

7/8" ø Hex HEAD NUT

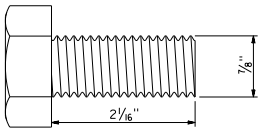

7/8" ø Hex HEAD BOLT

POST NUT AND BOLT

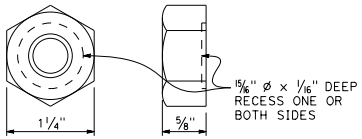

5/8" ø RECESS NUT

For use with button head bolt, see Note 3

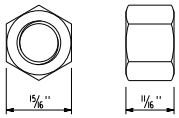

5/8" ø Hex NUT

For use with Anchor Plate

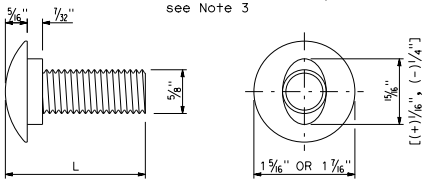

5/8" ø BUTTON HEAD BOLT

Used at splices and rail element to post connection

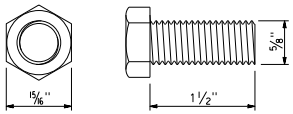

5/8" ø Hex HEAD BOLT

POST NUT AND BOLT

Used with cable Anchor Plate connection

BUTTON HEAD BOLT	
L	THREAD LENGTH
1 1/4"	FULL THREAD LENGTH
2"	FULL THREAD LENGTH
9 1/2"	4" Min THREAD LENGTH
14"	4" Min THREAD LENGTH
25"	4" Min THREAD LENGTH

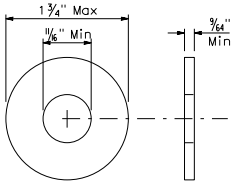

STEEL WASHER

Washer used with cable Anchor Plate connection, see Note 2

NOTES:

1. For Approach Guardrail Transition (AGT) hardware, see Standard Plan A79A3.
2. Steel washer used on backside of wood posts within end anchors, and at cable anchor plate connections.
3. Recessed portion of nut must be placed towards oblong shoulder of button head bolt.

Dist	COUNTY	ROUTE	POST MILES TOTAL PROJECT	SHEET No.	TOTAL SHEETS

Jawad Naderi
REGISTERED CIVIL ENGINEER

September 18, 2026
PLANS APPROVAL DATE

REGISTERED PROFESSIONAL ENGINEER
Mohammad Jawad Naderi
No. C96340
Exp. 9-30-26
CIVIL
STATE OF CALIFORNIA

THE STATE OF CALIFORNIA OR ITS OFFICERS OR AGENTS SHALL NOT BE RESPONSIBLE FOR THE ACCURACY OR COMPLETENESS OF SCANNED COPIES OF THIS PLAN SHEET.

STATE OF CALIFORNIA
DEPARTMENT OF TRANSPORTATION

THRIE BEAM BARRIER (TYPE M) STANDARD HARDWARE DETAILS

NO SCALE

A78M2

2026 STANDARD PLAN A78M2

7-1-26

Return to Table of Contents

Dist	COUNTY	ROUTE	POST MILES TOTAL PROJECT	SHEET No.	TOTAL SHEETS

Jawad Naderi
REGISTERED CIVIL ENGINEER

September 18, 2026
PLANS APPROVAL DATE

REGISTERED PROFESSIONAL ENGINEER
Mohammad Jawad Naderi
No. C96340
Exp. 9-30-26
CIVIL
STATE OF CALIFORNIA

THE STATE OF CALIFORNIA OR ITS OFFICERS OR AGENTS SHALL NOT BE RESPONSIBLE FOR THE ACCURACY OR COMPLETENESS OF SCANNED COPIES OF THIS PLAN SHEET.

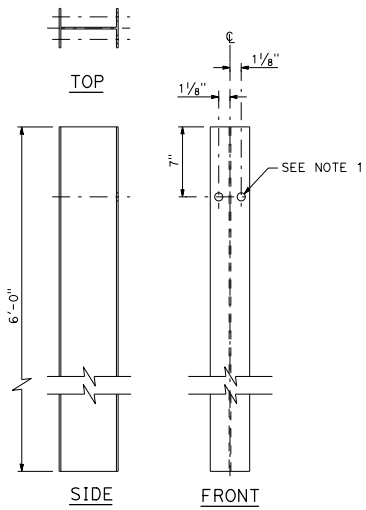

W6 x 8.5 OR W6 x 9
STEEL LINE POST
See Note 6

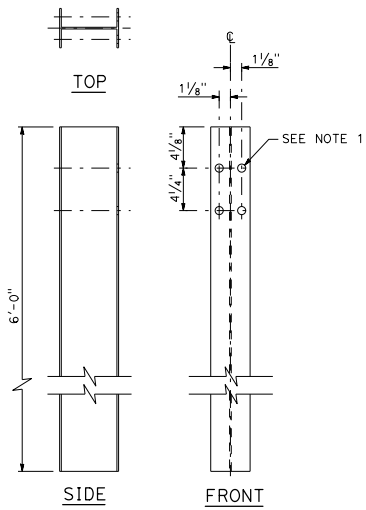

W6 x 8.5 OR W6 x 9 STEEL POST
FOR TRANSITION FROM THRIE BEAM TO MGS

NOTES:

1. All holes in steel post to be 13/16" ø maximum. Holes in wood blocks to be ¾" ø ±1/16".
2. Dimensions shown for wood blocks are nominal.
3. For use with W6 x 8.5 or W6 x 9 steel post.
4. Notched face of block faces steel post.
5. For additional information on AGT standard hardware, see Standard Plan A79A3.
6. Standard MGS steel post and block can be used as an alernative to the Thrie Beam Barrier (Type M) post and block as shown on Standard Plan A77N2.
7. Dimensions of plastic blocks vary by manufacturer. See Authorized Material List for dimensions.

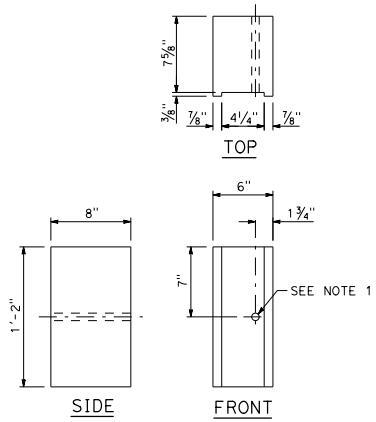

6" x 8"
NOTCHED WOOD OR PLASTIC BLOCK
See Notes 3, 4 and 6

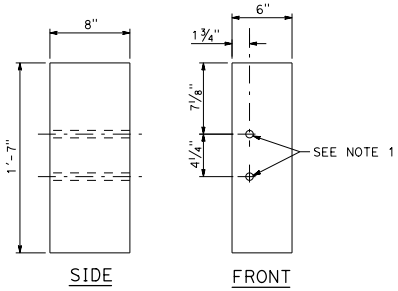

6" x 8"
TRANSITION BLOCK FROM
THRIE BEAM TO MGS

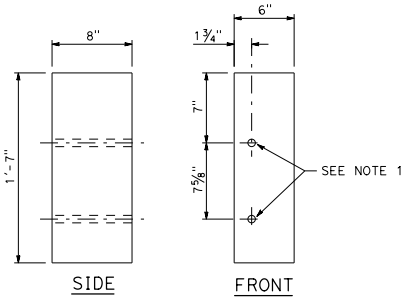

6" x 8"
WOOD BLOCK FOR
END ANCHOR ASSEMBLY
AND HEIGHT TRANSITION

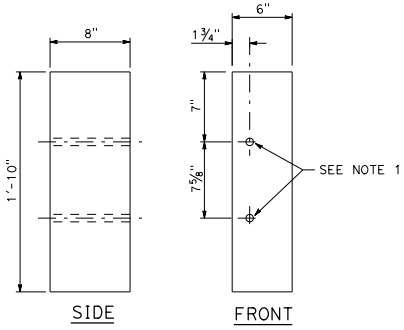

6" x 8"
BLOCK FOR END ANCHOR ASSEMBLY
(TYPE SFT-M)

STATE OF CALIFORNIA
DEPARTMENT OF TRANSPORTATION

THRIE BEAM BARRIER (TYPE M)
POST AND BLOCK DETAILS
NO SCALE

A78M3

7-1-26

2026 STANDARD PLAN A78M3

Return to Table of Contents

Dist	COUNTY	ROUTE	POST MILES TOTAL PROJECT	SHEET No.	TOTAL SHEETS

Jawad Naderi
REGISTERED CIVIL ENGINEER

September 18, 2026
PLANS APPROVAL DATE

REGISTERED PROFESSIONAL ENGINEER
Mohammad Jawad Naderi
No. C96340
Exp. 9-30-26
CIVIL
STATE OF CALIFORNIA

THE STATE OF CALIFORNIA OR ITS OFFICERS OR AGENTS SHALL NOT BE RESPONSIBLE FOR THE ACCURACY OR COMPLETENESS OF SCANNED COPIES OF THIS PLAN SHEET.

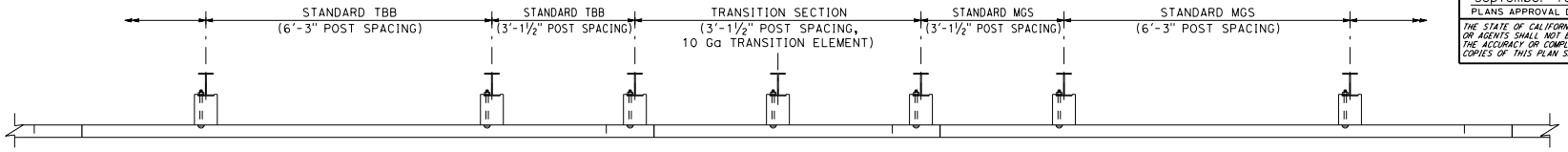

PLAN

SINGLE THRIE BEAM BARRIER

NOTES:

1. For details of standard single and double thrie beam barrier, see Standard Plans A78M1, A78M2, and A78M3.
2. For center post and block of transition section, see Standard Plan A79A3, AGT Post T2 and Transition Block at Post No. T2 details.

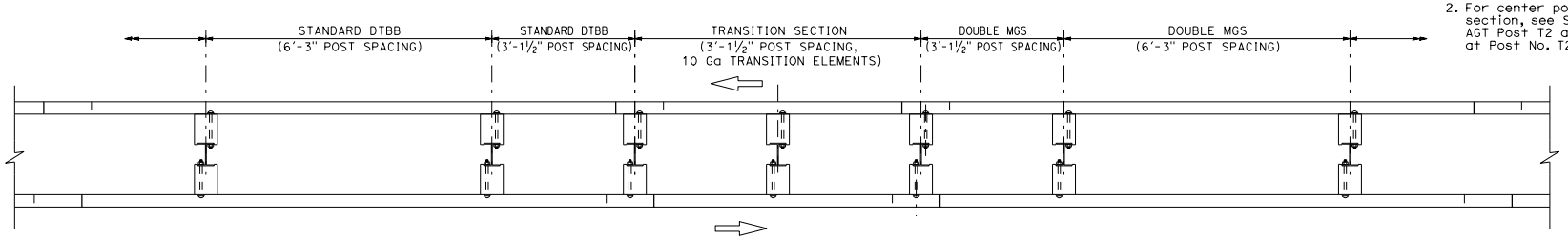

PLAN

DOUBLE THRIE BEAM BARRIER

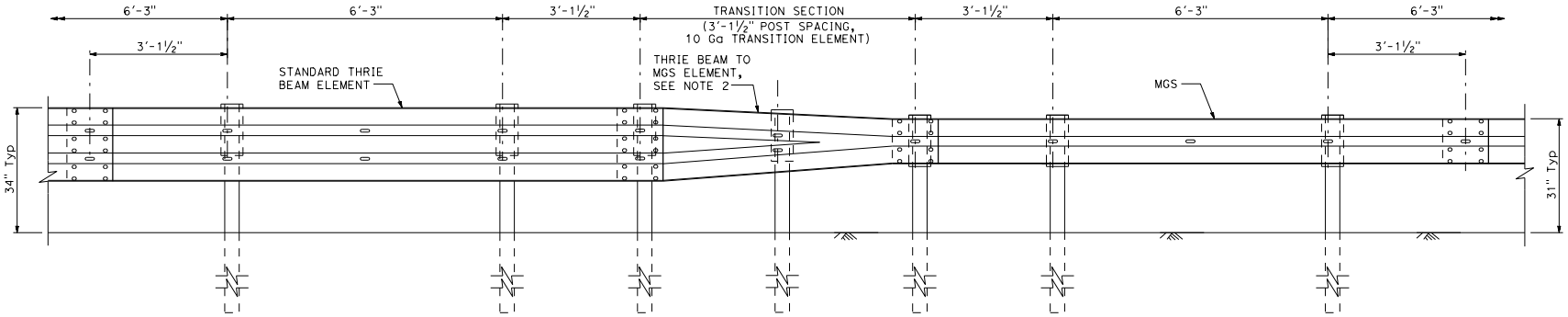

ELEVATION

SINGLE/DOUBLE THRIE BEAM BARRIER (TYPE M)
TRANSITION TO MIDWEST GUARDRAIL SYSTEM

STATE OF CALIFORNIA
DEPARTMENT OF TRANSPORTATION

SINGLE AND DOUBLE THRIE BEAM BARRIER (TYPE M) TRANSITION TO MIDWEST GUARDRAIL SYSTEM

NO SCALE

A78P1

2026 STANDARD PLAN A78P1

7-1-26

Return to Table of Contents

Dist	COUNTY	ROUTE	POST MILES TOTAL PROJECT	SHEET No.	TOTAL SHEETS

Jawad Naderi
REGISTERED CIVIL ENGINEER

September 18, 2026
PLANS APPROVAL DATE

REGISTERED PROFESSIONAL ENGINEER
Mohammad Jawad Naderi
No. C96340
Exp. 9-30-26
CIVIL
STATE OF CALIFORNIA

THE STATE OF CALIFORNIA OR ITS OFFICERS OR AGENTS SHALL NOT BE RESPONSIBLE FOR THE ACCURACY OR COMPLETENESS OF SCANNED COPIES OF THIS PLAN SHEET.

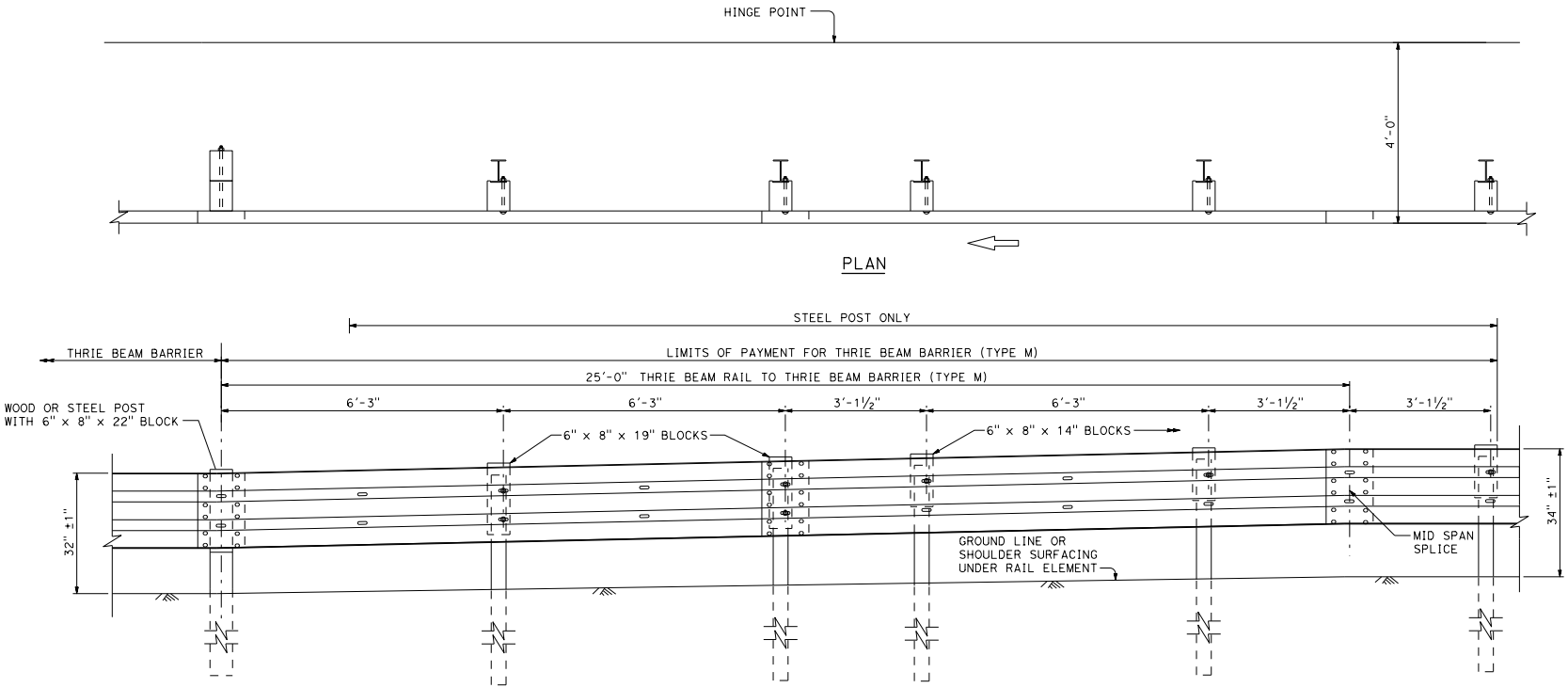

STATE OF CALIFORNIA
DEPARTMENT OF TRANSPORTATION

THRIE BEAM BARRIER (TYPE M) TRANSITION TO THRIE BEAM RAIL

NO SCALE

A78P2

7-1-26

2026 STANDARD PLAN A78P2

Return to Table of Contents

Dist	COUNTY	ROUTE	POST MILES TOTAL PROJECT	SHEET No.	TOTAL SHEETS

Jawad Naderi
REGISTERED CIVIL ENGINEER

September 18, 2026
PLANS APPROVAL DATE

REGISTERED PROFESSIONAL ENGINEER
Mohammad Jawad Naderi
No. C96340
Exp. 9-30-26
CIVIL
STATE OF CALIFORNIA

THE STATE OF CALIFORNIA OR ITS OFFICERS OR AGENTS SHALL NOT BE RESPONSIBLE FOR THE ACCURACY OR COMPLETENESS OF SCANNED COPIES OF THIS PLAN SHEET.

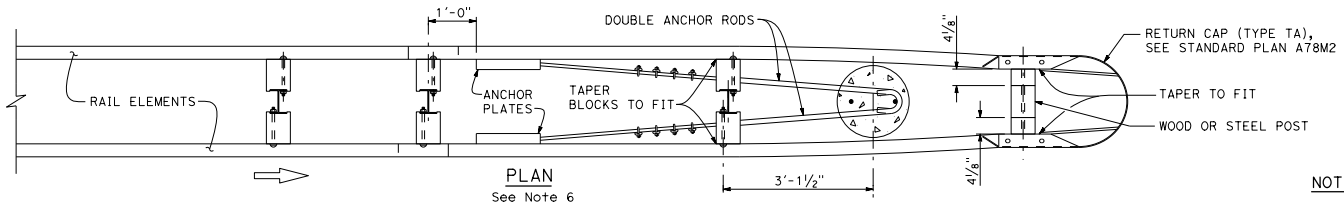

PLAN
See Note 6

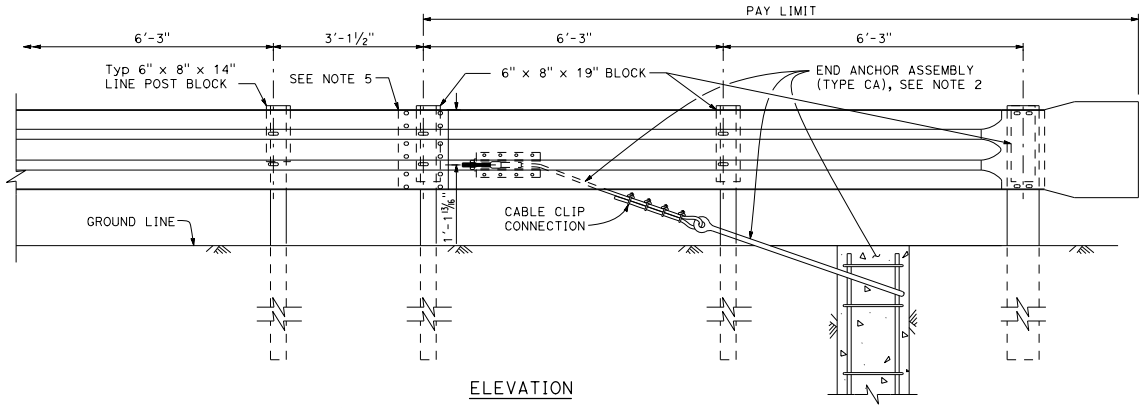

ELEVATION

END ANCHOR ASSEMBLY (TYPE CA) FOR DOUBLE THRIE BEAM BARRIER (TYPE M)

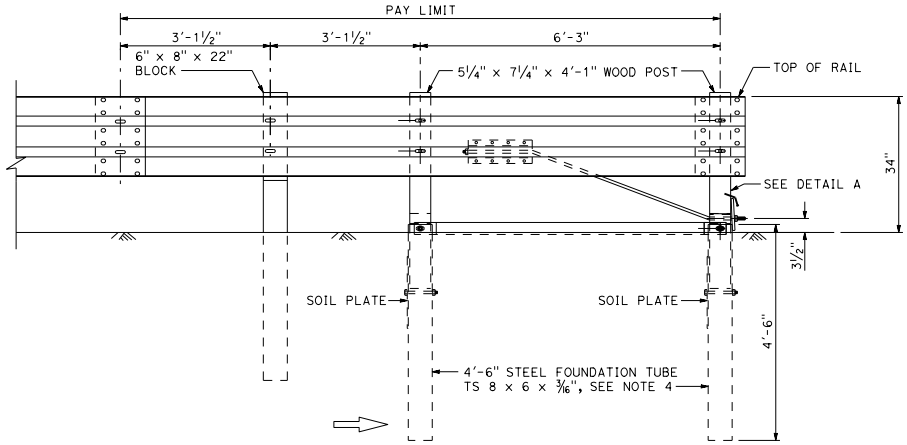

END ANCHOR ASSEMBLY (TYPE SFT-M)
FOR TRAFFIC DEPARTURE END OF SINGLE THRIE BEAM BARRIER (TYPE M)

(For one-way roadways)
See Notes 1 and 7

NOTES:

1. For additional details of End Anchor Assembly (Type SFT-M), see Standard Plan A77S1.
2. For End Anchor Assembly (Type CA) details, see Standard Plan A77T1.
3. The type of terminal system to be used will be shown on the Project Plans.
4. A 6'-0" length steel foundation tube, TS 8 x 6 x 3/16, without a soil plate, may be furnished and installed in place of the 4'-6" length steel foundation tube and soil plate shown. Minimum embedment of the 6'-0" length tube shall be 5'-9". A 5/8" ø hex head bolt and nut shall be installed in the hole in the 6'-0" length tube to keep the wood post from dropping into the tube.
5. Bolt rail element to post at splice at end anchor assembly.
6. End Anchor Assembly for use with double Thrie Beam Barrier (Type M) for trailing end only. End Anchor Assembly must be shielded from head on impacts to the Return Cap (Type TA).
7. When single sided Thrie Beam Barrier (Type M) is used with End Anchor Assembly (Type SFT-M), no blocks are used for the two end posts in steel foundation tubes.

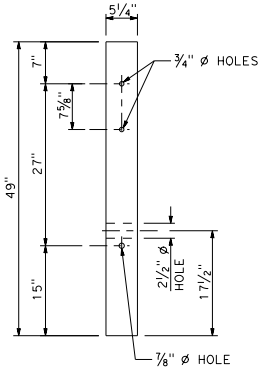

DETAIL A

WOOD POST IN STEEL FOUNDATION TUBE

STATE OF CALIFORNIA
DEPARTMENT OF TRANSPORTATION

THRIE BEAM BARRIER (TYPE M) END ANCHORS

NO SCALE

A78Q1

7-1-26

2026 STANDARD PLAN A78Q1

Return to Table of Contents

Dist	COUNTY	ROUTE	POST MILES TOTAL PROJECT	SHEET No.	TOTAL SHEETS

Jawad Naderi
REGISTERED CIVIL ENGINEER

September 18, 2026
PLANS APPROVAL DATE

REGISTERED PROFESSIONAL ENGINEER
Mohammad Jawad Naderi
No. C96340
Exp. 9-30-26
CIVIL
STATE OF CALIFORNIA

THE STATE OF CALIFORNIA OR ITS OFFICERS OR AGENTS SHALL NOT BE RESPONSIBLE FOR THE ACCURACY OR COMPLETENESS OF SCANNED COPIES OF THIS PLAN SHEET.

NOTES:

1. The typical passageway opening for motorcycles is 6'-0" to 8'-0" and requires a minimum of 25'-0" of flared double thrie beam barrier (Type M) past the parabola including the end anchor. Generally, motorcycle passageways are not used where median width is less than 25'-0". The typical passageway opening for motor vehicles is 12'-0" to 16'-0". Generally, motor vehicle passageways are not used where median width is 32'-0" or less. For a 16'-0" wide opening, double thrie beam barrier (Type M) must be offset each side by a minimum of 4'-6". A minimum of 53'-0" of railing past the parabola flared at 15:1 is required on each side of the opening. See Project Plans for width of passageway opening.
2. Barrier end offsets from edge of traveled way vary depending on type of highway facility involved. End offsets other than 10'-0" will be shown on the Project Plans.
3. For typical flare offsets for 25'-0" length parabola with maximum offset of 10", see Standard Plan A77P1.

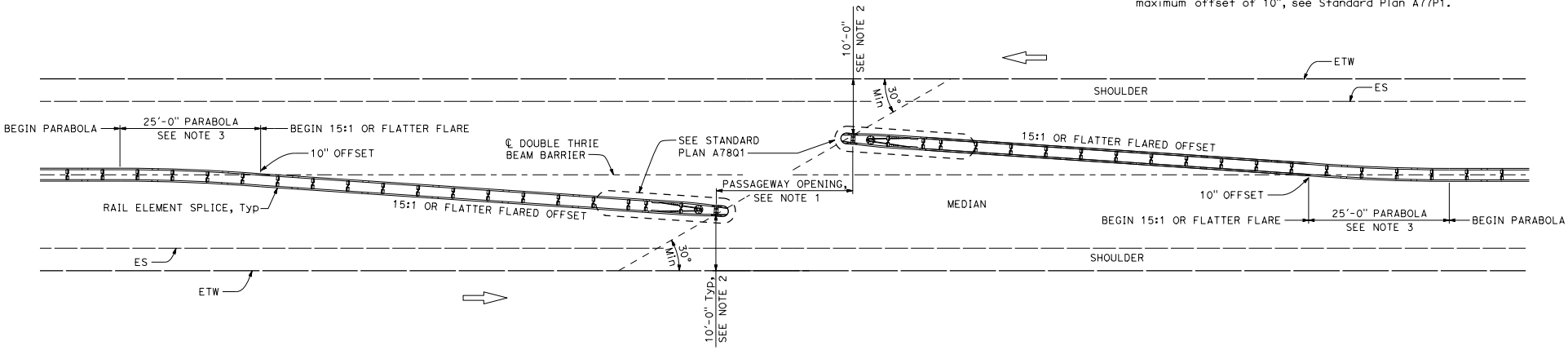

PLAN

EMERGENCY PASSAGEWAY IN THRIE BEAM BARRIER

STATE OF CALIFORNIA
DEPARTMENT OF TRANSPORTATION

DOUBLE THRIE BEAM BARRIER (TYPE M)
EMERGENCY PASSAGEWAY DETAILS

NO SCALE

A78Q2

2026 STANDARD PLAN A78Q2

7-1-26

Return to Table of Contents

Dist	COUNTY	ROUTE	POST MILES TOTAL PROJECT	SHEET No.	TOTAL SHEETS

Jawad Naderi
REGISTERED CIVIL ENGINEER

September 18, 2026
PLANS APPROVAL DATE

REGISTERED PROFESSIONAL ENGINEER Mohammad Jawad Naderi No. C96340 Exp. 9-30-26 CIVIL STATE OF CALIFORNIA

THE STATE OF CALIFORNIA OR ITS OFFICERS OR AGENTS SHALL NOT BE RESPONSIBLE FOR THE ACCURACY OR COMPLETENESS OF SCANNED COPIES OF THIS PLAN SHEET.

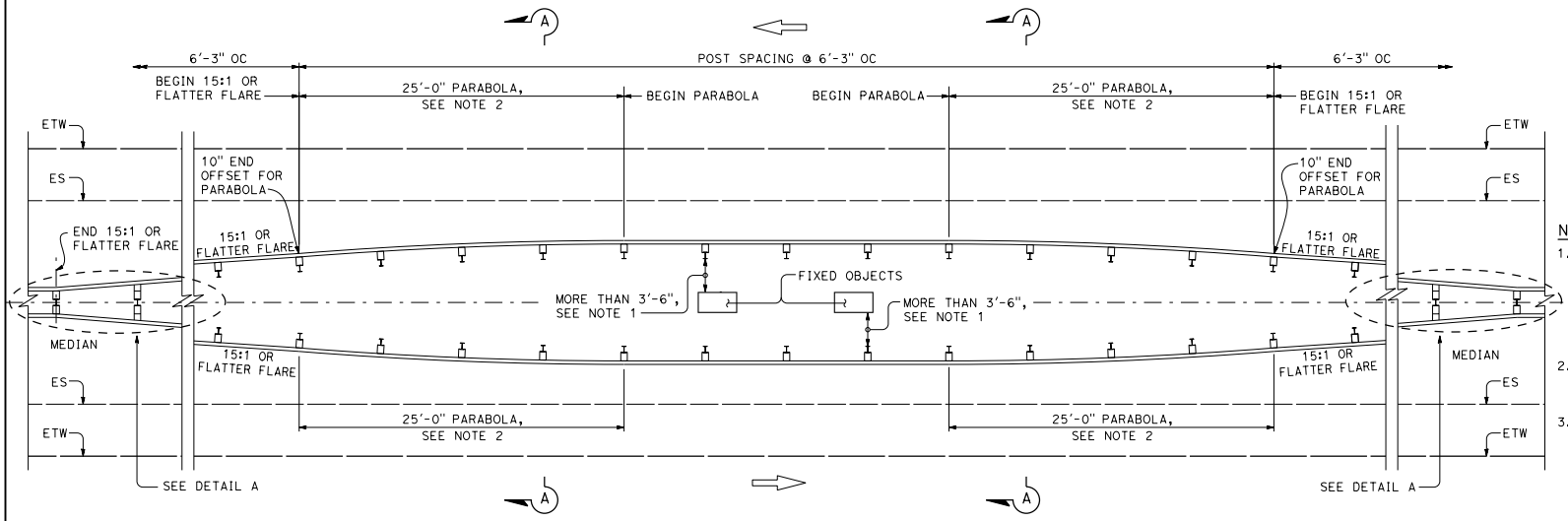

PLAN

THRIE BEAM BARRIER AT FIXED OBJECTS

Steel post with wood block shown, see Note 1.

NOTES:

1. Where the clearance between the back of post and the face of a fixed object is less than 3'-6", use concrete barrier or transition to MGS and use strengthened midwest guardrail system as shown on Standard Plan A77R1 to shield the fixed object(s).
2. For typical flare offsets, use 25'-0" length parabola with maximum offset of 10", see Standard Plan A77P1.
3. At 15:1 flare each stanard post spacing increases by 5". Transition double thrie beam to two runs of single thrie beam by placing an additional 2" block at 1st post of transition and place an additional 5" block at the second post of transition.

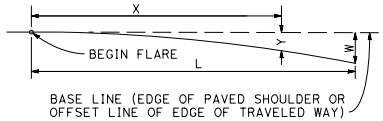

$$Y = \frac{WX^2}{L^2}$$

Y = OFFSET FROM BASE LINE
W = MAXIMUM OFFSET
X = DISTANCE ALONG BASE LINE
L = LENGTH OF FLARE

PARABOLIC FLARE OFFSETS

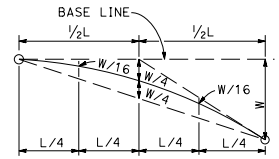

TYPICAL PARABOLIC LAYOUT

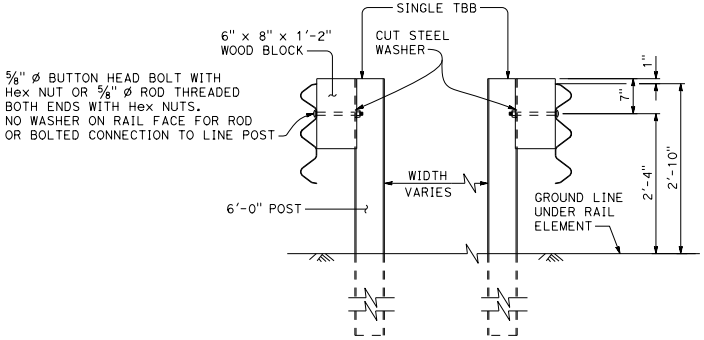

SECTION A-A

Steel post with wood block shown.

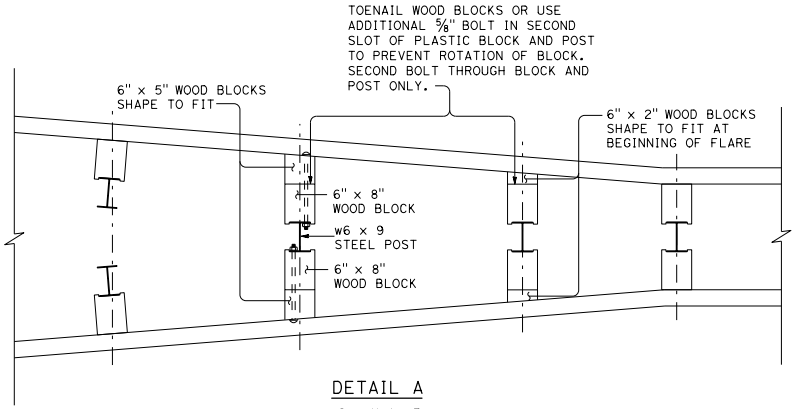

DETAIL A

See Note 3

STATE OF CALIFORNIA
DEPARTMENT OF TRANSPORTATION

THRIE BEAM BARRIER (TYPE M) AT FIXED OBJECTS IN MEDIAN

NO SCALE

A78Q3

2026 STANDARD PLAN A78Q3

7-1-26

Return to Table of Contents

Dist	COUNTY	ROUTE	POST MILES TOTAL PROJECT	SHEET No.	TOTAL SHEETS

Jawad Naderi
REGISTERED CIVIL ENGINEER

September 18, 2026
PLANS APPROVAL DATE

REGISTERED PROFESSIONAL ENGINEER
Mohammad Jawad Naderi
No. C96340
Exp. 9-30-26
CIVIL
STATE OF CALIFORNIA

THE STATE OF CALIFORNIA OR ITS OFFICERS OR AGENTS SHALL NOT BE RESPONSIBLE FOR THE ACCURACY OR COMPLETENESS OF SCANNED COPIES OF THIS PLAN SHEET.

NOTES:

1. Line post, blocks and hardware to be used are shown on Standard Plans A78M1, A78M2, and A78M3.
2. Post spacing to be 6'-3" center to center, except as otherwise noted.
3. Line posts are W6 x 8.5 or W6 x 9 steel posts, 6'-0" in length, with 6" x 8" x 1'-2" notched wood blocks.
4. For Transition Railing (Type AGT) details, see Standard Plan A79A2.
5. The 15:1 or flatter flare is measured off of the edge of traveled way.
6. For approach guardrail transition (AGT) standard hardware, see Standard Plan A79A3.
7. For Parabolic Flare Offset formula, see Standard Plan A78Q3. For Parabolic Flare Offset values, see Standard Plan A77P1.

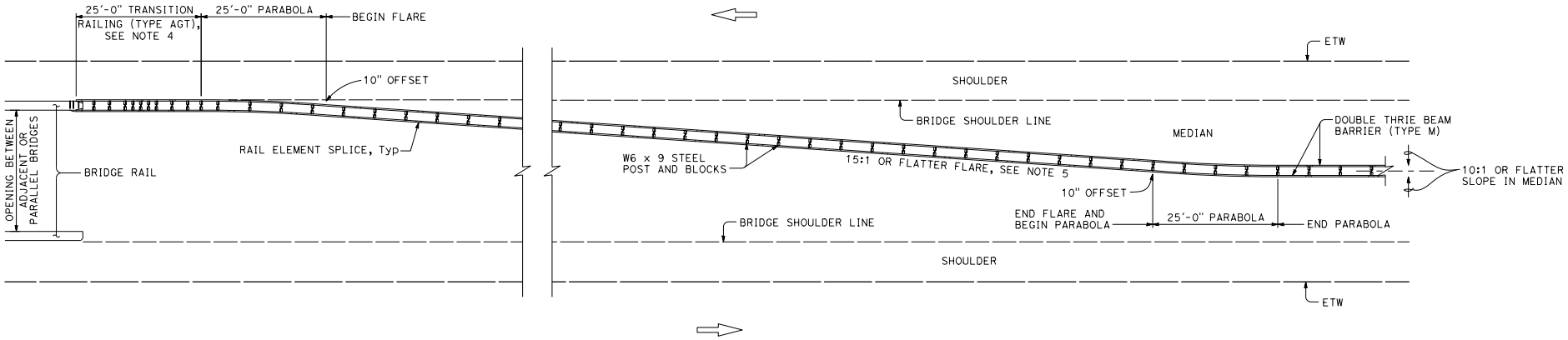

TYPE 25A CONNECTION LAYOUT

STATE OF CALIFORNIA
DEPARTMENT OF TRANSPORTATION

THRIE BEAM BARRIER (TYPE M) TYPICAL LAYOUT FOR CONNECTION TO BRIDGE RAILING

NO SCALE

A78R

7-1-26

2026 STANDARD PLAN A78R

Return to Table of Contents

Dist	COUNTY	ROUTE	POST MILES TOTAL PROJECT	SHEET No.	TOTAL SHEETS

Jawad Naderi
REGISTERED CIVIL ENGINEER

September 18, 2026
PLANS APPROVAL DATE

REGISTERED PROFESSIONAL ENGINEER
Mohammad Jawad Naderi
No. C96340
Exp. 9-30-26
CIVIL
STATE OF CALIFORNIA

THE STATE OF CALIFORNIA OR ITS OFFICERS OR AGENTS SHALL NOT BE RESPONSIBLE FOR THE ACCURACY OR COMPLETENESS OF SCANNED COPIES OF THIS PLAN SHEET.

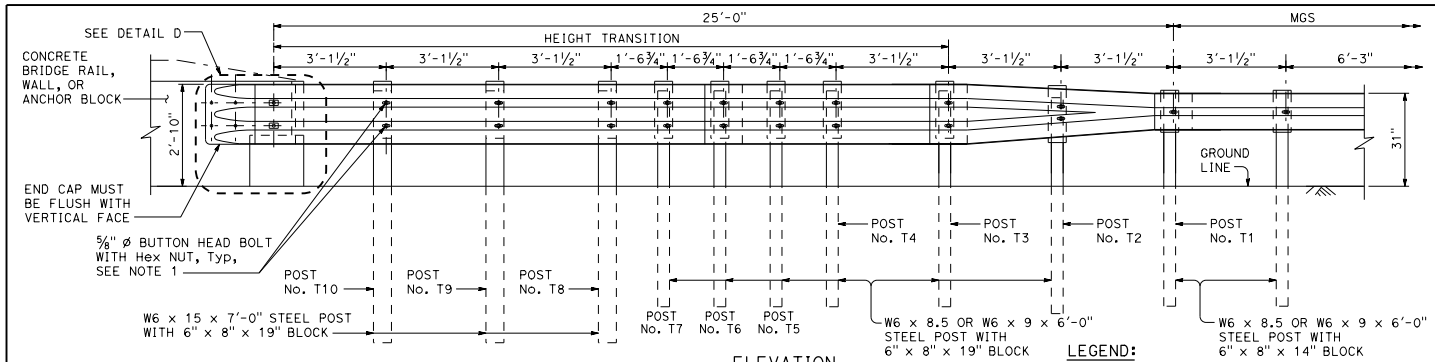

ELEVATION

TRANSITION RAILING (TYPE AGT)

LEGEND:

- (A) NESTED 12 GAUGE THRIE BEAM ELEMENTS
- (B) ONE 12 GAUGE THRIE BEAM ELEMENT, (RAIL ELEMENT 7'-3½" LENGTH)
- (C) ONE SYMMETRICAL 10 GAUGE TRANSITION ELEMENT FROM THRIE BEAM TO "W" BEAM

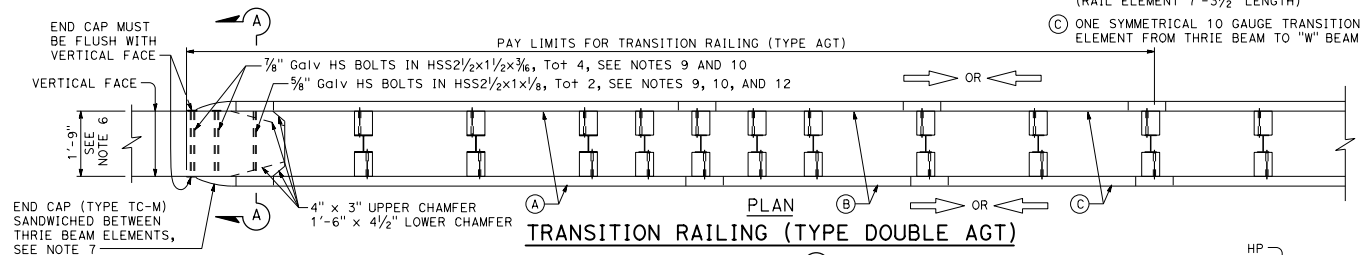

PLAN

TRANSITION RAILING (TYPE DOUBLE AGT)

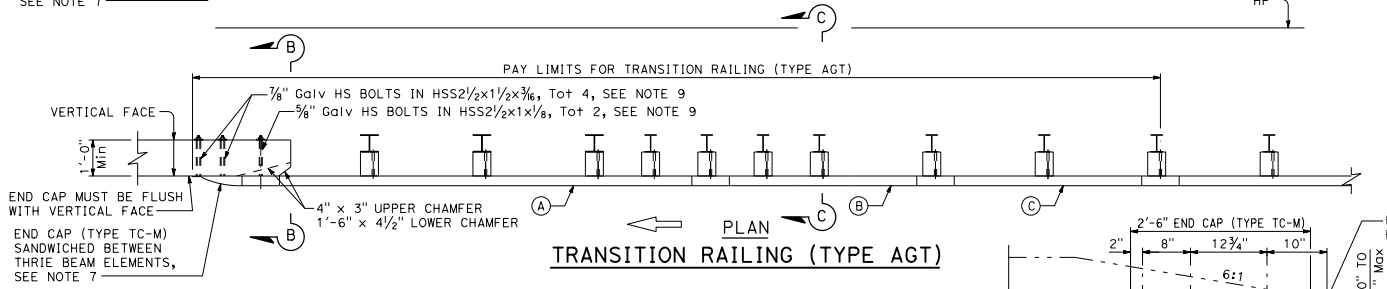

PLAN

TRANSITION RAILING (TYPE AGT)

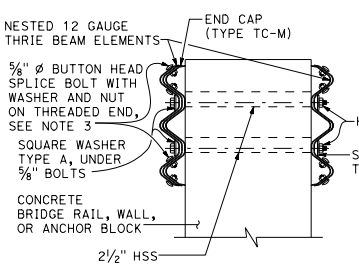

SECTION A-A

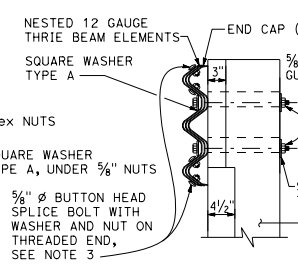

SECTION B-B

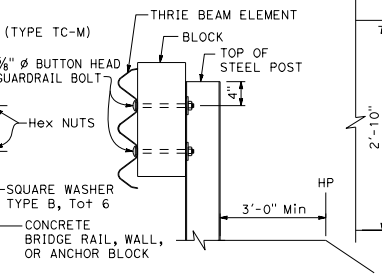

SECTION C-C
SEE NOTE 2

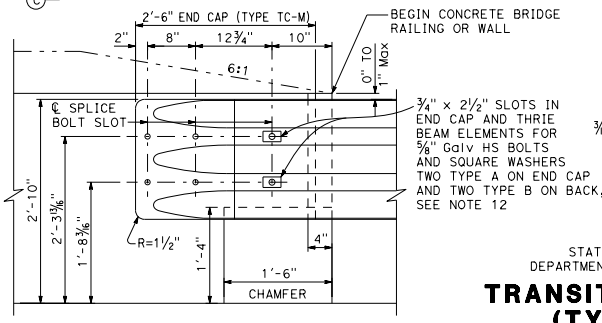

DETAIL D

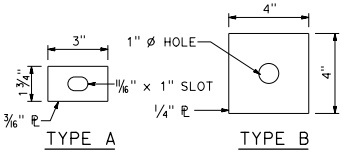

SQUARE WASHERS

STATE OF CALIFORNIA
DEPARTMENT OF TRANSPORTATION

TRANSITION RAILING (TYPE AGT)

NO SCALE

A79A1

NOTES:

1. Use ⅝" ø button head bolts and hex nuts for connections to posts. No washer on rail face for bolted connections to post.
2. The maximum height of dike is 4" if placed under rail.
3. All 12 splice bolts and nuts are required for rail splices. Splice bolt holes at splices with nested elements may be increased from the standard 29/32" x 1⅛" slot size to 1⅛" ø.
4. The top elevation of bridge rail or wall at connection or blocks shall not project more than 1" above the top elevation of the rail element.
5. Connections to Transition Railing (Type AGT) will be either standard MGS railing or thrie beam railing as shown here or on Standard Plan A79A2.
6. At Double AGT connection where anchor block or bridge rail width is less than 1'-9", a metal box spacer with a minimum thickness of 1½" or Type B metal plate washers for less than 1½" should be used to complete the width of AGT post and two blocks. Spacers must not be used where snagging is possible from approaching traffic.
7. End Cap (Type TC-M) to be installed over 12 gauge thrie beam elements where transition railing is installed on the departure end of bridge railing.
8. Conform standard railing section height to 31" at Post No. T1.
9. HSS refers to galvanized metal sleeve.
10. ½" maximum exposed threads.
11. Where AGT is placed on the backside of a curb and sidewalk, the material around the post must be at the level of the sidewalk surface.
12. For Type Double AGT, use Type A washers on the face of both end caps at ⅝" bolted connections.

2026 STANDARD PLAN A79A1

7-1-26

Return to Table of Contents

Dist	COUNTY	ROUTE	POST MILES TOTAL PROJECT	SHEET No.	TOTAL SHEETS

Jawad Naderi
REGISTERED CIVIL ENGINEER

September 18, 2026
PLANS APPROVAL DATE

REGISTERED PROFESSIONAL ENGINEER Mohammad Jawad Naderi No. C96340 Exp. 9-30-26 CIVIL STATE OF CALIFORNIA

THE STATE OF CALIFORNIA OR ITS OFFICERS OR AGENTS SHALL NOT BE RESPONSIBLE FOR THE ACCURACY OR COMPLETENESS OF SCANNED COPIES OF THIS PLAN SHEET.

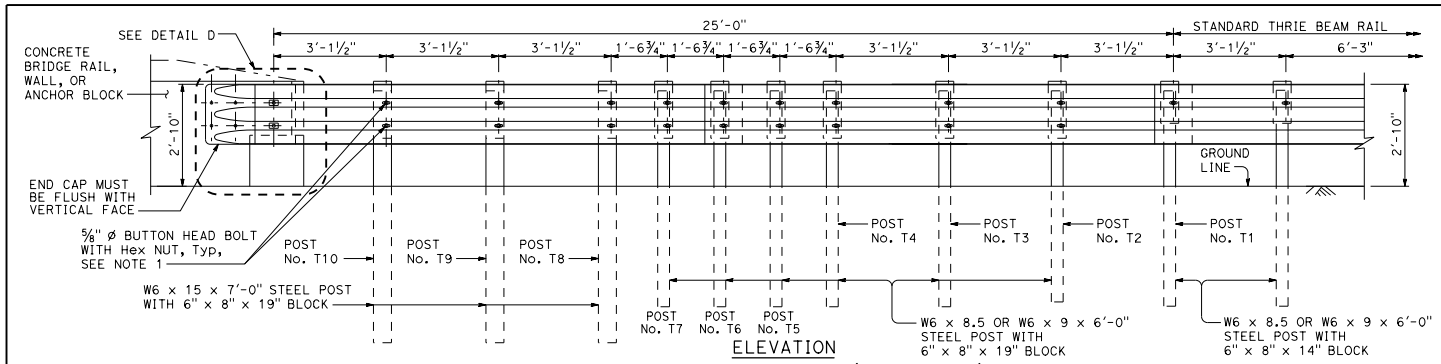

ELEVATION

TRANSITION RAILING (TYPE AGT)

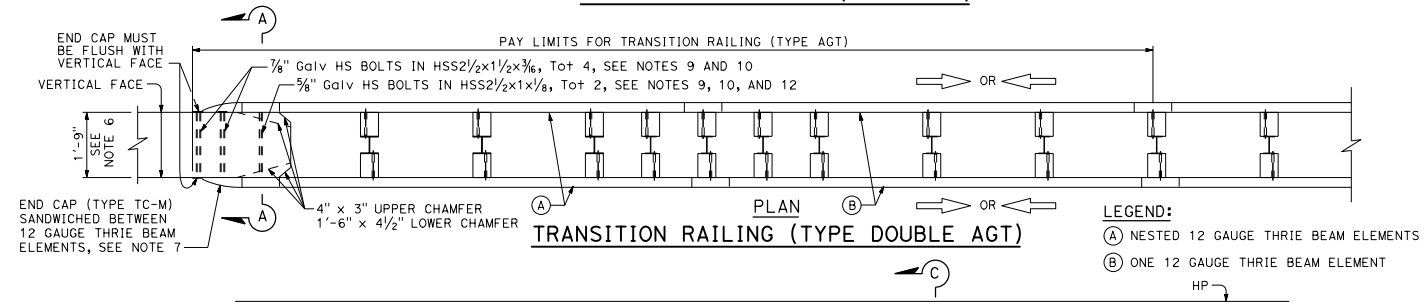

PLAN

TRANSITION RAILING (TYPE DOUBLE AGT)

LEGEND:

(A) NESTED 12 GAUGE THRIE BEAM ELEMENTS

(B) ONE 12 GAUGE THRIE BEAM ELEMENT

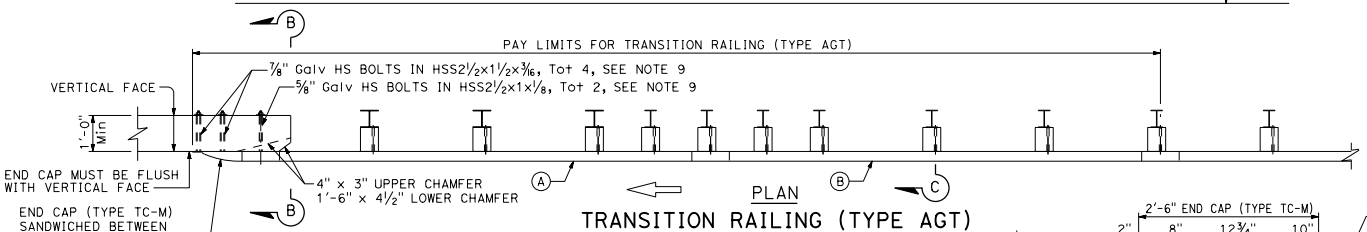

PLAN

TRANSITION RAILING (TYPE AGT)

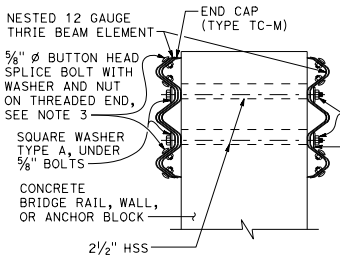

SECTION A-A

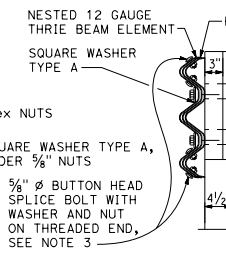

SECTION B-B

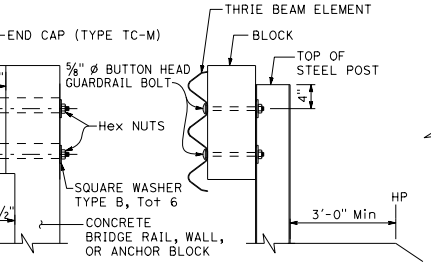

SECTION C-C
SEE NOTE 11

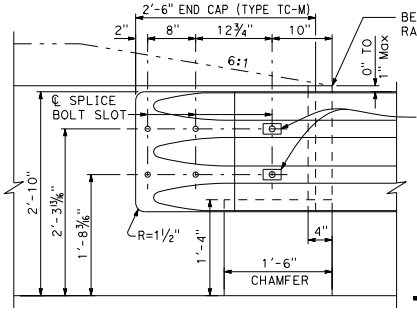

DETAIL D

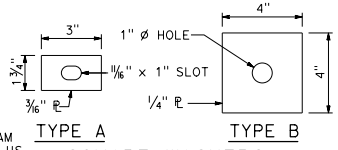

SQUARE WASHERS

STATE OF CALIFORNIA
DEPARTMENT OF TRANSPORTATION

TRANSITION RAILING (TYPE AGT) TO THRIE BEAM BARRIER (TYPE M)

NO SCALE

A79A2

NOTES:

1. Use ⅝" ø button head bolts and hex nuts for connections to posts. No washer on rail face for bolted connections to post.
2. For Thrie beam details, see Standard Plans A78 series.
3. All 12 splice bolts and nuts are required for rail splices. Splice bolt holes at splices with nested elements may be increased from the standard 29/32" x 1⅛" slot size to 1⅛" ø.
4. The top elevation of bridge rail or wall at connection or blocks shall not project more than 1" above the top elevation of the rail element.
5. Connections to transition railing (Type AGT) will be either standard railing section of MGS or thrie beam railing as shown here or on Standard Plan A79A1.
6. At Double AGT connection where anchor block or bridge rail width is less than 1'-9", a metal box spacer with a minimum thickness of 1½" or Type B metal plate washers for less than 1½" should be used to complete the width of AGT post and two blocks. Spacers must not be used where snagging is possible from approaching traffic.
7. End cap (Type TC-M) may be installed over 12 gauge thrie beam elements where transition railing is installed on the departure end of bridge railing.
8. For Type Double AGT, use Type A washers on the face of both end caps at ⅝" bolted connections.
9. Hollow Structural Section (HSS) refers to galvanized metal sleeve.
10. ½" maximum exposed threads.
11. The maximum height of dike is 4" if placed under the rail.
12. For Transition Railing (Type AGT) to MGS connection details, see Standard Plan A79A1.

2026 STANDARD PLAN A79A2

7-1-26

Return to Table of Contents

Dist	COUNTY	ROUTE	POST MILES TOTAL PROJECT	SHEET No.	TOTAL SHEETS

Jawad Naderi
REGISTERED CIVIL ENGINEER

September 18, 2026
PLANS APPROVAL DATE

REGISTERED PROFESSIONAL ENGINEER Mohammad Jawad Naderi No. C96340 Exp. 9-30-26 CIVIL STATE OF CALIFORNIA

THE STATE OF CALIFORNIA OR ITS OFFICERS OR AGENTS SHALL NOT BE RESPONSIBLE FOR THE ACCURACY OR COMPLETENESS OF SCANNED COPIES OF THIS PLAN SHEET.

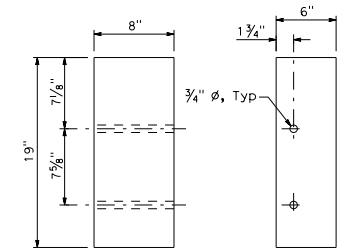

TRANSITION BLOCK AT POST No. T3 THRU T10

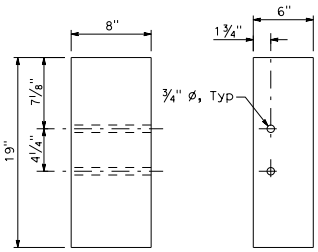

TRANSITION BLOCK AT POST No. T2
For transition to MGS only

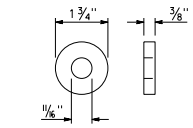

5/8" WASHER FOR BUTTON HEAD BOLT AT NESTED SPLICES

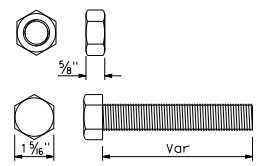

7/8" ø Galv HS Hex HEAD BOLT AND NUT

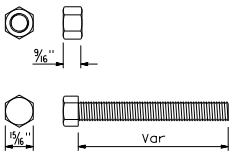

5/8" ø Galv HS Hex HEAD BOLT AND NUT

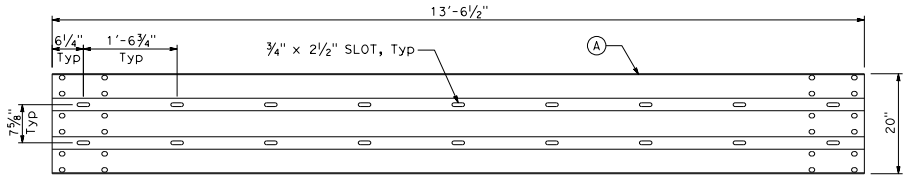

ELEVATION SECTION

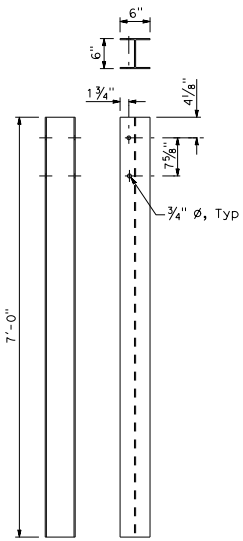

SIDE FRONT
AGT POST T8 THRU T10

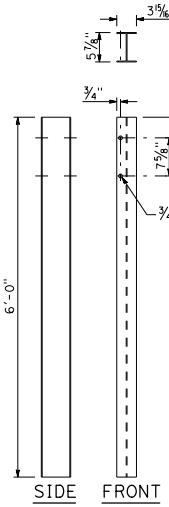

SIDE FRONT
AGT POST T2 THRU T7

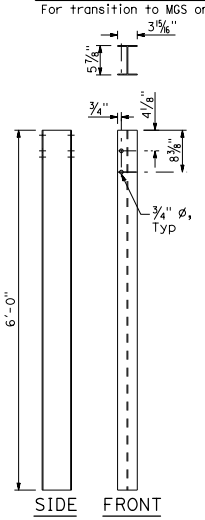

SIDE FRONT
AGT POST T2 FOR TRANSITION TO MGS ONLY
See Standard Plan A79A1 for details.

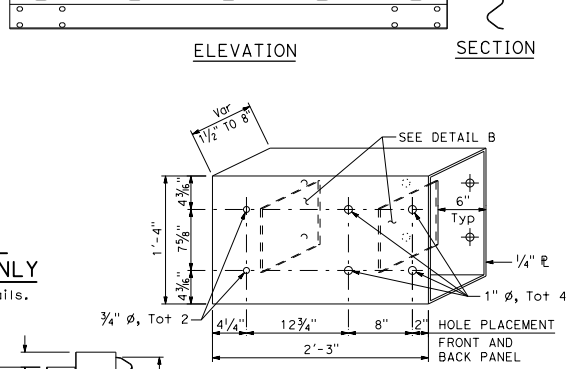

DETAIL A

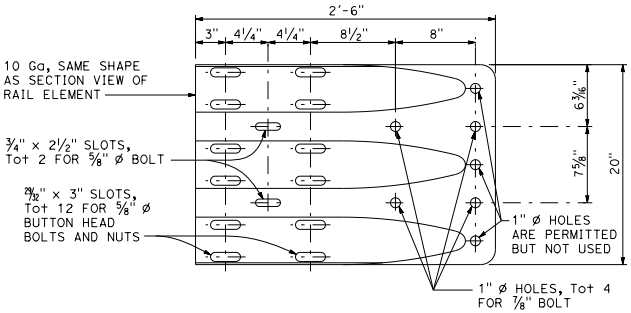

END CAP (TYPE TC-M)

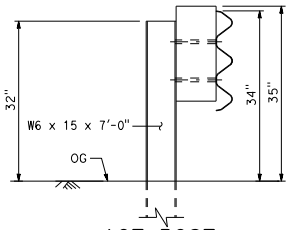

AGT POST T8 THRU T10

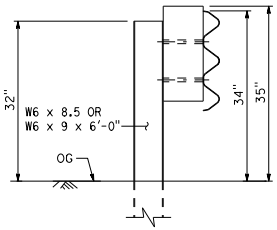

AGT POST T3 THRU T7
For AGT transition to MGS, AGT Posts T3 thru T7.
For AGT transition to Thrie Beam, AGT posts T1 thru T7.

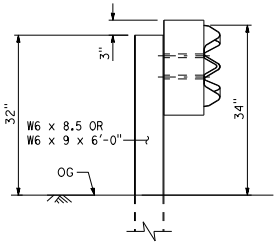

AGT POST T2
For AGT transition to MGS

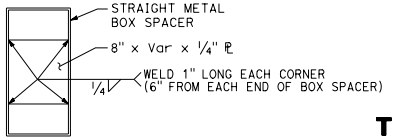

DETAIL B
STRAIGHT METAL BOX SPACER

STATE OF CALIFORNIA
DEPARTMENT OF TRANSPORTATION

TRANSITION RAILING (TYPE AGT) DETAILS

NO SCALE

A79A3

7-1-26

Return to Table of Contents

Dist	COUNTY	ROUTE	POST MILES TOTAL PROJECT	SHEET No.	TOTAL SHEETS

Jawad Naderi
REGISTERED CIVIL ENGINEER

September 18, 2026
PLANS APPROVAL DATE

REGISTERED PROFESSIONAL ENGINEER Mohammad Jawad Naderi No. C96340 Exp. 9-30-26 CIVIL STATE OF CALIFORNIA

THE STATE OF CALIFORNIA OR ITS OFFICERS OR AGENTS SHALL NOT BE RESPONSIBLE FOR THE ACCURACY OR COMPLETENESS OF SCANNED COPIES OF THIS PLAN SHEET.

NOTES:

1. Additional details of posts, blocks and hardware are shown on Standard Plan A79A3.
2. For additional details of Transition Railing (Type AGT), see Standard Plans A79A1 and A79A2.
3. For typical use of Connection Detail AA, see Layout Types 12A and 12B on Standard Plan A77Q1, Layout Types 12C and 12D on Standard Plan A77Q2, and Layout Type 12E on Standard Plan A77Q3. Layout Types 12AA and 12BB on Standard Plan A77Q4 and Layout Type 12CC on Standard Plan A77Q5.
4. For typical use of Connection Detail BB, see Layout Type 12D (Structure Departure Railing Connection) on Standard Plan A77Q2 and Layout Type 12DD on Standard Plan A77Q5.
5. Typical use of Connection Detail CC is for use with thrie beam at structure departure where AGT connection is not needed. For AGT connection at structure departure, see Connection Detail HH on Standard Plan A79B2.
6. Where the height of the railing at the structure connection exceeds the height of the thrie beam railing by more than 1" at Connection Detail AA or Detail CC, taper the top of the end of the concrete railing at 6:1 to be within 1" of the top elevation of the thrie beam rail.
7. Taper top of AGT anchor block to 5'-0" high at approach to structure walls and columns, see Standard Plan A79C1.
8. For details of End Cap (Type TC-M), see Standard Plan A79A3.
9. If not able to place Plate B due to connection to wall or abutment, drill 1" ø hole 9" deep and bond with epoxy anchors, see Standard Plan A79C2.
10. Hollow Structural Section (HSS) refers to a galvanized metal sleeve.
11. On conventional highways, when trailing end of structure is within 20'-0" of the center line of opposing traffic or 30'-0" for undivided expressways, place transition railing (Type AGT) for opposing direction of traffic. See Standard Plan A79A1.

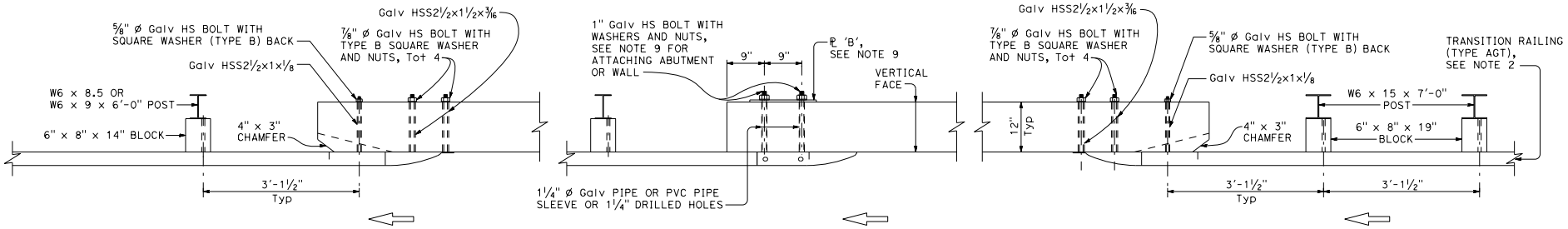

PLAN

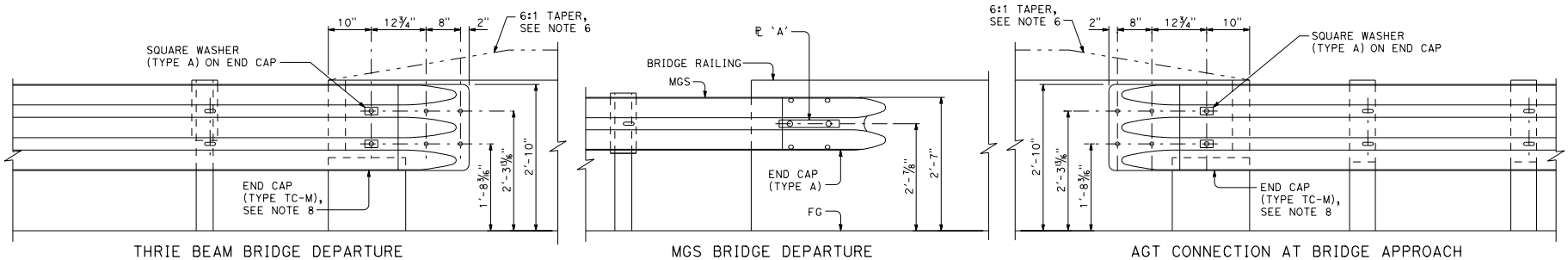

THRIE BEAM BRIDGE DEPARTURE CONNECTION DETAIL CC
See Notes 5 and 11

MGS BRIDGE DEPARTURE CONNECTION DETAIL BB
See Notes 4 and 11

AGT CONNECTION AT BRIDGE APPROACH CONNECTION DETAIL AA
See Note 3

ELEVATION

MIDWEST GUARDRAIL SYSTEM CONNECTION TO BRIDGE RAILING ABUTMENT OR WALL

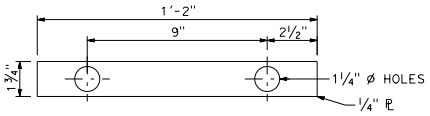

PLATE 'A'

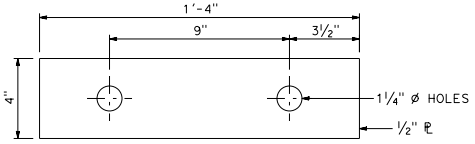

PLATE 'B'
For backside of connection BB

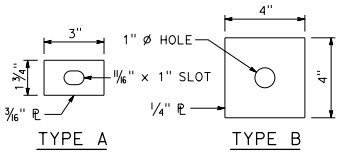

SQUARE WASHERS

STATE OF CALIFORNIA
DEPARTMENT OF TRANSPORTATION

TRANSITION RAILING (TYPE AGT) TO BRIDGE RAILINGS WITHOUT SIDEWALKS

NO SCALE

A79B1

2026 STANDARD PLAN A79B1

7-1-26

Return to Table of Contents

NOTES:

1. For typical use of AGT Connection Detail FF, see Layout Types 12A-12E on Standard Plans A77Q1 thru A77Q3, and Layout Types 12AA thru 12CC on Standard Plans A77Q4 and A77Q5.
2. For typical use of MGS Bridge Departure Connection Detail GG, see Layout Type 12D on Standard Plan A77Q2 and Layout Type DD on Standard Plan A77Q5.
3. For typical use of Connection Detail HH, where AGT is at departure end of Bridge or Structure, see Layout Types 12AA thru 12CC on Standard Plans A77Q4 and A77Q5.
4. Where the bridge sidewalk is not continued beyond the end of the bridge railing, the sidewalk shall be transitioned down from the sidewalk elevation on the bridge to the roadway elevation at a constant rate for the entire length of the AGT, not to exceed 8.33 percent.
5. If not able to place through bolts due to connection to wall or abutment, drill 1⅛" ø hole 9" deep and bond with epoxy anchors.
6. For sidewalk width 6'-0" or greater, rail height is measured from top of sidewalk.
7. For sidewalk width less than 6'-0", rail height is measured from roadway surface.
8. Hollow Structural Section (HSS) refers to a galvanized metal sleeve.
9. Height of curb is 6" maximum for posted speed greater than 45 MPH.
10. Height of curb may be greater than 6" for posted speed 45 MPH or less.
11. Where the height of the railing at the structure connection exceeds the height of the thrie beam railing by more than 1" at Connection Detail AA or Detail CC, taper the top of the end of the concrete railing at 6:1 to be within 1" of the top elevation of the thrie beam rail.

Dist	COUNTY	ROUTE	POST MILES TOTAL PROJECT	SHEET No.	TOTAL SHEETS

Jawad Naderi
REGISTERED CIVIL ENGINEER

September 18, 2026
PLANS APPROVAL DATE

REGISTERED PROFESSIONAL ENGINEER Mohammad Jawad Naderi No. C96340 Exp. 9-30-26 CIVIL STATE OF CALIFORNIA

THE STATE OF CALIFORNIA OR ITS OFFICERS OR AGENTS SHALL NOT BE RESPONSIBLE FOR THE ACCURACY OR COMPLETENESS OF SCANNED COPIES OF THIS PLAN SHEET.

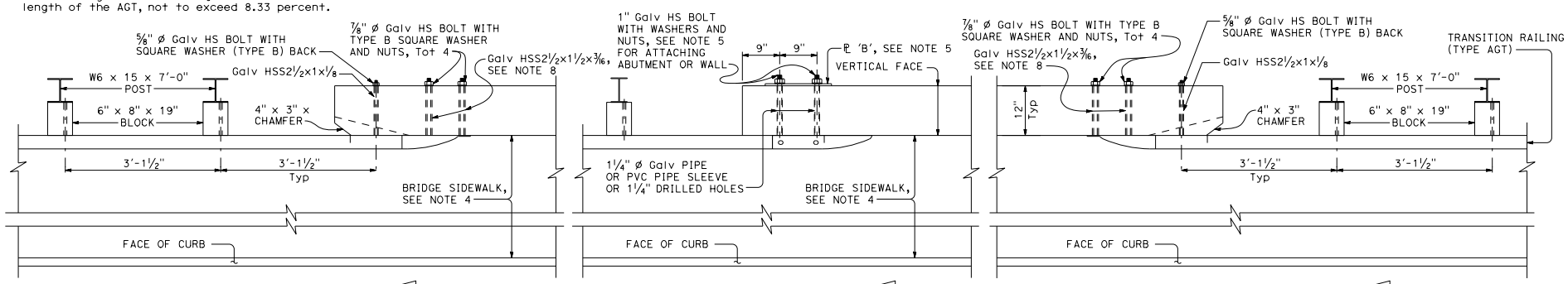

PLAN

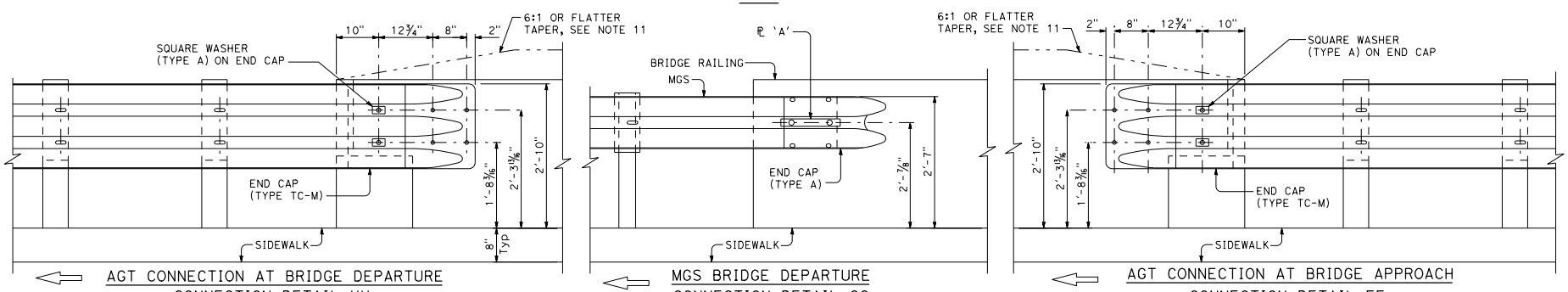

AGT CONNECTION AT BRIDGE DEPARTURE
CONNECTION DETAIL HH
See Note 3

MGS BRIDGE DEPARTURE
CONNECTION DETAIL GG
See Note 2

AGT CONNECTION AT BRIDGE APPROACH
CONNECTION DETAIL FF
See Note 1

ELEVATION

MIDWEST GUARDRAIL SYSTEM CONNECTION TO BRIDGE RAILING WITH SIDEWALKS

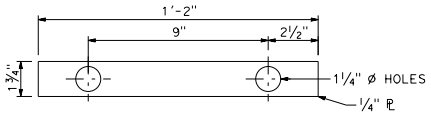

PLATE 'A'

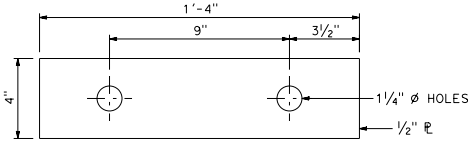

PLATE 'B'
For backside of connection BB

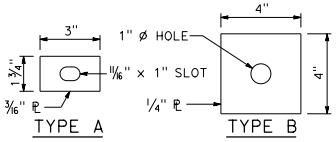

SQUARE WASHERS

STATE OF CALIFORNIA
DEPARTMENT OF TRANSPORTATION

TRANSITION RAILING (TYPE AGT) TO BRIDGE RAILINGS WITH SIDEWALKS

NO SCALE

A79B2

2026 STANDARD PLAN A79B2

7-1-26

Return to Table of Contents

Dist	COUNTY	ROUTE	POST MILES TOTAL PROJECT	SHEET No.	TOTAL SHEETS

Jawad Naderi
REGISTERED CIVIL ENGINEER

September 18, 2026
PLANS APPROVAL DATE

REGISTERED PROFESSIONAL ENGINEER
Mohammad Jawad Naderi
No. C96340
Exp. 9-30-26
CIVIL
STATE OF CALIFORNIA

THE STATE OF CALIFORNIA OR ITS OFFICERS OR AGENTS SHALL NOT BE RESPONSIBLE FOR THE ACCURACY OR COMPLETENESS OF SCANNED COPIES OF THIS PLAN SHEET.

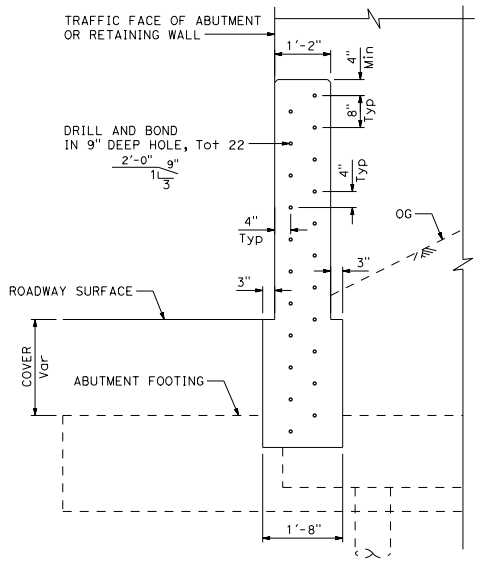

SECTION A-A

Existing Seat type or Diaphragm Abutment and Retaining Wall.

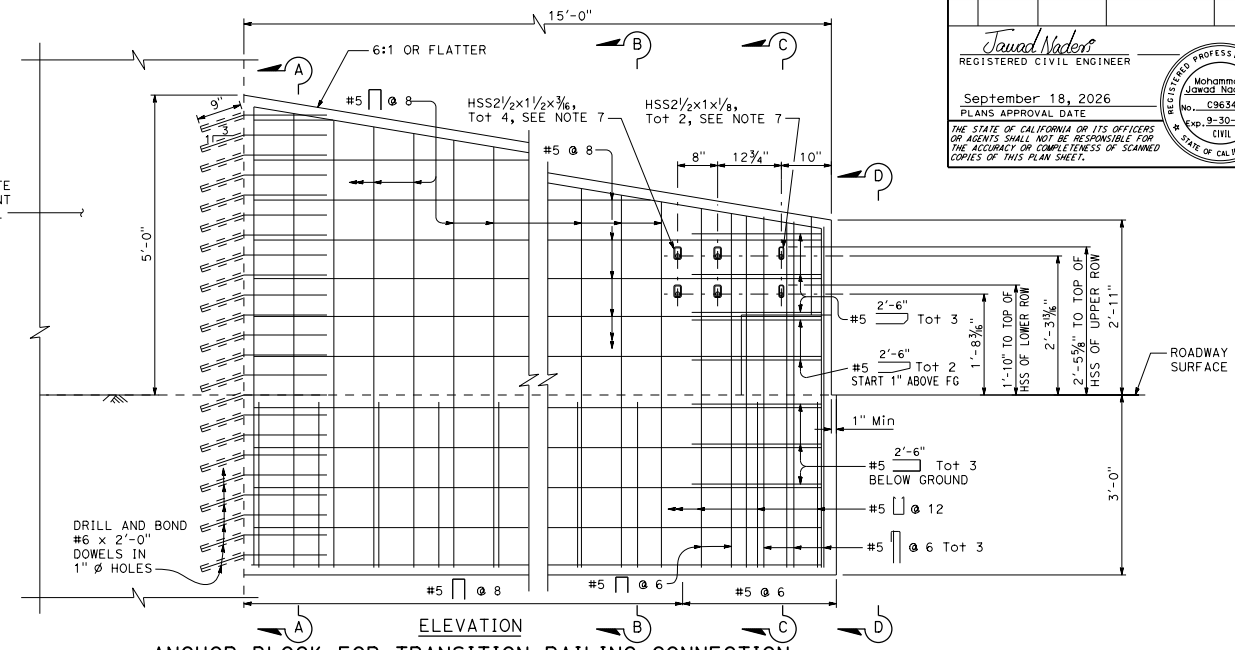

ELEVATION

ANCHOR BLOCK FOR TRANSITION RAILING CONNECTION

DETAIL C

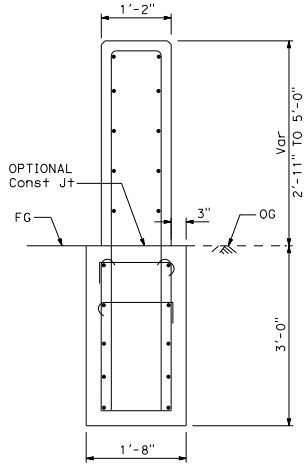

SECTION B-B

For reinforcement not shown, see Section C-C.

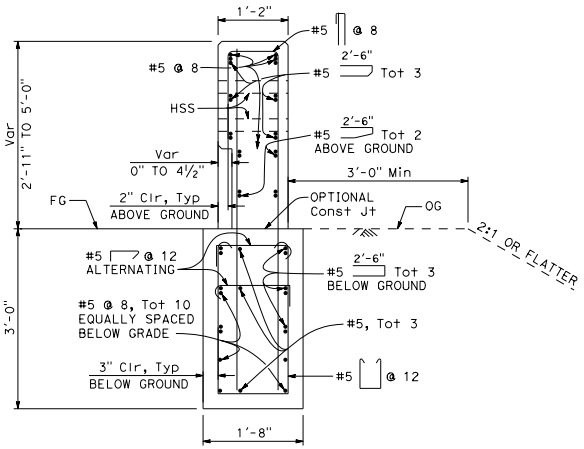

SECTION C-C

Thrie beam not shown.

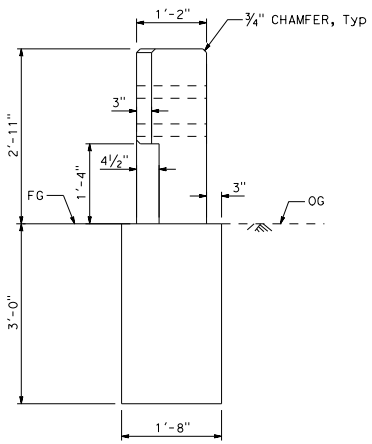

VIEW D-D

NOTES:

1. These connection details apply to abutments and walls.
2. Additional details of posts, blocks and hardware are shown on Standard Plan A79A3.
3. For additional details of Transition Railing (Type AGT), see Standard Plans A79A1 and A79A2.
4. End Cap (Type TC-M) must be flush with the finished surface.
5. Hollow Structural Section (HSS) refers to a galvanized metal sleeve.
6. Doweling not required in seat type abutment below the top of the seat.
7. Adjust reinforcement as needed to clear HSS by minimum 1".

STATE OF CALIFORNIA
DEPARTMENT OF TRANSPORTATION

TRANSITION RAILING (TYPE AGT) CONNECTIONS TO ABUTMENTS AND WALLS

NO SCALE

A79C1

2026 STANDARD PLAN A79C1

7-1-26

Return to Table of Contents

Dist	COUNTY	ROUTE	POST MILES TOTAL PROJECT	SHEET No.	TOTAL SHEETS

Jawad Naderi
REGISTERED CIVIL ENGINEER

September 18, 2026
PLANS APPROVAL DATE

REGISTERED PROFESSIONAL ENGINEER
Mohammad Jawad Naderi
No. C96340
Exp. 9-30-26
CIVIL
STATE OF CALIFORNIA

THE STATE OF CALIFORNIA OR ITS OFFICERS OR AGENTS SHALL NOT BE RESPONSIBLE FOR THE ACCURACY OR COMPLETENESS OF SCANNED COPIES OF THIS PLAN SHEET.

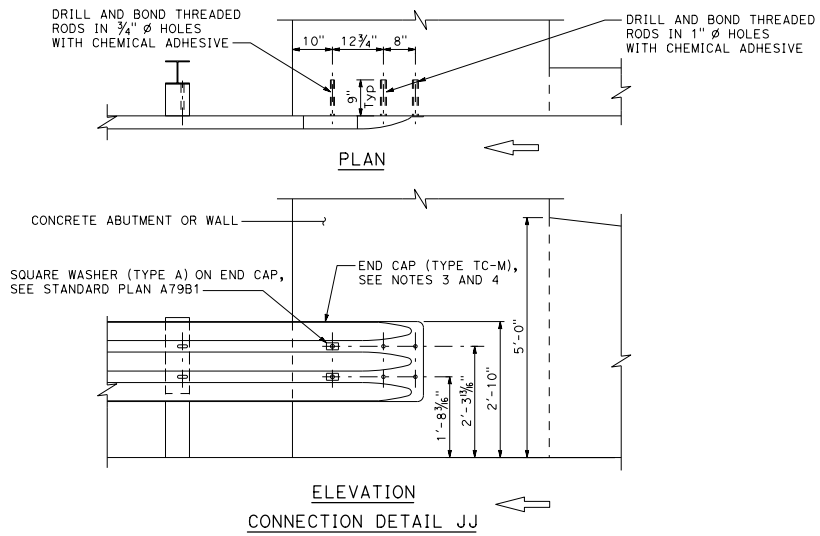

CONNECTION DETAIL JJ

SINGLE THRIE BEAM BARRIER CONNECTION TO ABUTMENT OR WALL

See Note 5

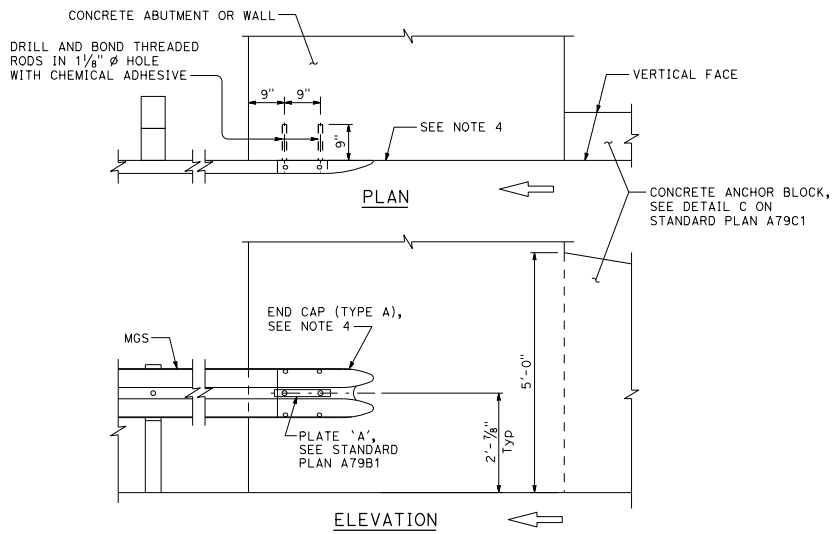

CONNECTION DETAIL KK

See Note 6

MIDWEST GUARDRAIL SYSTEM CONNECTION TO ABUTMENT OR WALL

NOTES:

1. These connection details apply to concrete abutments and walls.
2. For additional details of Transition Railing (Type AGT), see Standard Plans A79A1 and A79A2.
3. For details of End Cap (Type TC-M), see Standard Plan A79A3.
4. End Cap (Type A or Type TC-M) must be flush with the finished surface.
5. Typical use of Detail JJ, Single Thrie Beam Connection to Abutment or Wall is for use with thrie beam at structure departure where AGT connection is not needed.
6. For typical use of Connection Detail KK, at structure departure, see Layout Type 12D on Standard Plan A77Q2 and Layout Type 12DD on Standard Plan A77Q5.

STATE OF CALIFORNIA
DEPARTMENT OF TRANSPORTATION

DEPARTING TRANSITION CONNECTIONS TO ABUTMENTS AND WALLS

NO SCALE

A79C2

2026 STANDARD PLAN A79C2

7-1-26

Return to Table of Contents

Dist	COUNTY	ROUTE	POST MILES TOTAL PROJECT	SHEET No.	TOTAL SHEETS

Jawad Naderi
REGISTERED CIVIL ENGINEER

September 18, 2026
PLANS APPROVAL DATE

REGISTERED PROFESSIONAL ENGINEER
Mohammad Jawad Naderi
No. C96340
Exp. 9-30-26
CIVIL
STATE OF CALIFORNIA

THE STATE OF CALIFORNIA OR ITS OFFICERS OR AGENTS SHALL NOT BE RESPONSIBLE FOR THE ACCURACY OR COMPLETENESS OF SCANNED COPIES OF THIS PLAN SHEET.

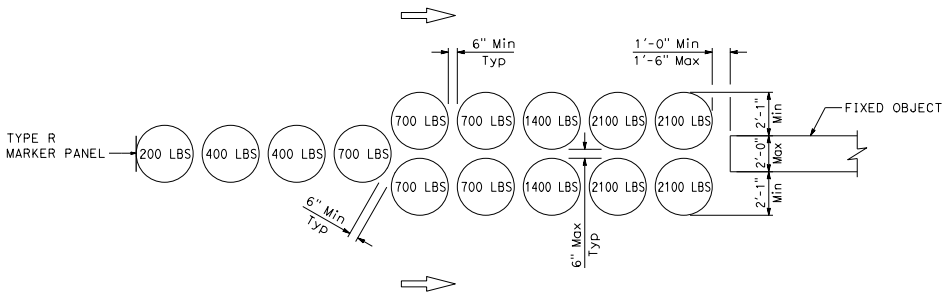

ARRAY 'U14M'

Approach speed 45 mph or more

NOTES:

1. (xxx) Indicates module layout and weight of sand in pounds for each module. Module spacing is based on the greater diameter of the modules.
2. All sand weights are nominal. Sand must contain no more than 7 percent water.
3. Modules shall be placed on hot mix asphalt, epoxy mortar or concrete surface. Modules to be placed on surfacing with greater than 5% downward slope shall be seated as shown.
4. Weight of sand and outline of each module shall be painted on the surface at each module location.
5. Module blocking, epoxied to the deck surface, is required for all modules placed on bridge decks. Two acceptable alternatives are shown. Other alternatives recommended by the manufacturer and approved by the Engineer will be accepted.
6. Approach speeds indicated conform to MASH criteria.

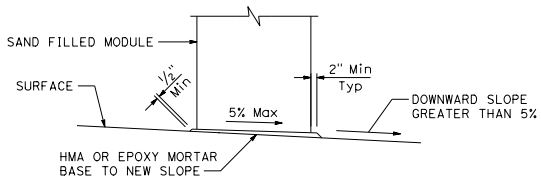

ELEVATION

SLOPED SEAT DETAIL

See Note 3

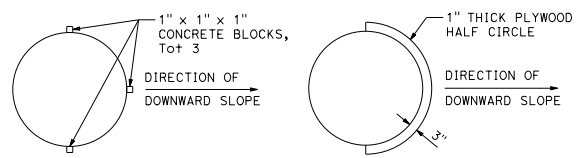

ALTERNATIVE 1

ALTERNATIVE 2

PLAN

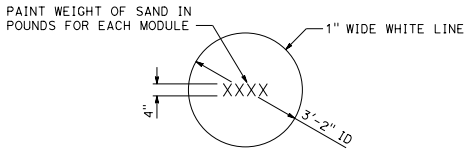

PAINTING DETAIL

See Note 4

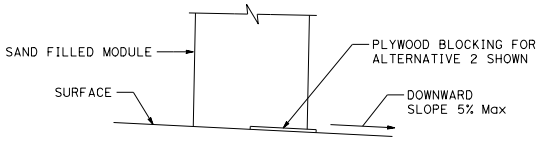

ELEVATION

BRIDGE DECK MODULE BLOCKING DETAILS

See Note 5

STATE OF CALIFORNIA
DEPARTMENT OF TRANSPORTATION

CRASH CUSHION SAND FILLED (UNIDIRECTIONAL)

NO SCALE

A81A

7-1-26

2026 STANDARD PLAN A81A

Return to Table of Contents

Dist	COUNTY	ROUTE	POST MILES TOTAL PROJECT	SHEET No.	TOTAL SHEETS

Jawad Naderi
REGISTERED CIVIL ENGINEER

September 18, 2026
PLANS APPROVAL DATE

REGISTERED PROFESSIONAL ENGINEER
Mohammad Jawad Naderi
No. C96340
Exp. 9-30-26
CIVIL
STATE OF CALIFORNIA

THE STATE OF CALIFORNIA OR ITS OFFICERS OR AGENTS SHALL NOT BE RESPONSIBLE FOR THE ACCURACY OR COMPLETENESS OF SCANNED COPIES OF THIS PLAN SHEET.

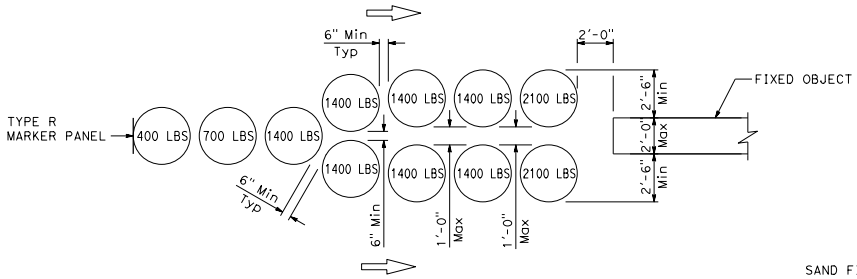

ARRAY 'U11'

Approach speed less than 45 mph

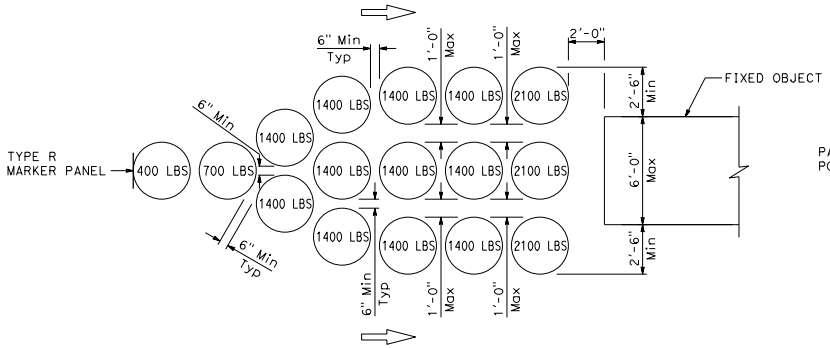

ARRAY 'U16'

Approach speed less than 45 mph

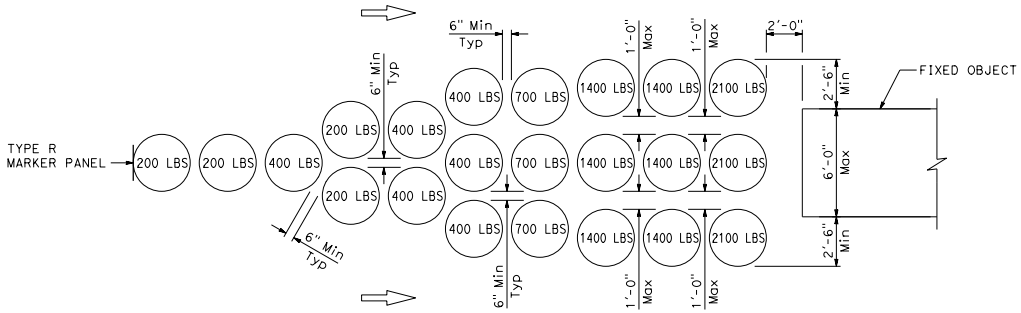

ARRAY 'U22'

Approach speed 45 mph or more

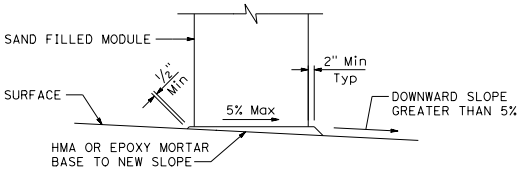

ELEVATION

SLOPED SEAT DETAIL

See Note 3

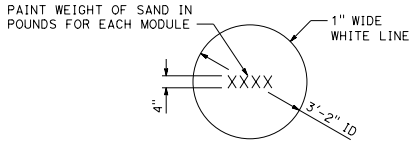

PAINTING DETAIL

See Note 4

NOTES:

1. (XXX) Indicates module layout and weight of sand in pounds for each module. Module spacing is based on the greater diameter of the modules.
2. All sand weights are nominal. Sand must contain no more than 7 percent water.
3. Modules shall be placed on hot mix asphalt, epoxy mortar or concrete surface. Modules to be placed on surfacing with greater than 5% downward slope shall be seated as shown.
4. Weight of sand and outline of each module shall be painted on the surface at each module location.
5. Module blocking, epoxied to the deck surface, is required for all modules placed on bridge decks. Two acceptable alternatives are shown. Other alternatives recommended by the manufacturer and approved by the Engineer will be accepted.
6. Approach speeds indicated conform to NCHRP Report 350 criteria.

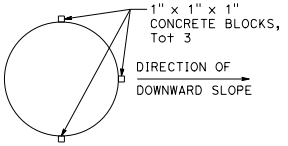

ALTERNATIVE 1

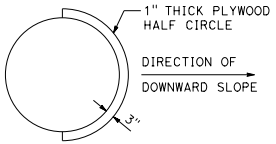

ALTERNATIVE 2

PLAN

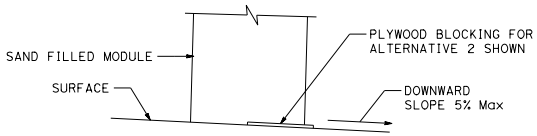

ELEVATION

BRIDGE DECK MODULE BLOCKING DETAILS

See Note 5

STATE OF CALIFORNIA
DEPARTMENT OF TRANSPORTATION

CRASH CUSHION SAND FILLED (UNIDIRECTIONAL)

NO SCALE

A81B

2026 STANDARD PLAN A81B

7-1-26

Return to Table of Contents

Dist	COUNTY	ROUTE	POST MILES TOTAL PROJECT	SHEET No.	TOTAL SHEETS

Jawad Naderi
REGISTERED CIVIL ENGINEER

September 18, 2026
PLANS APPROVAL DATE

REGISTERED PROFESSIONAL ENGINEER
Mohammad Jawad Naderi
No. C96340
Exp. 9-30-26
CIVIL
STATE OF CALIFORNIA

THE STATE OF CALIFORNIA OR ITS OFFICERS OR AGENTS SHALL NOT BE RESPONSIBLE FOR THE ACCURACY OR COMPLETENESS OF SCANNED COPIES OF THIS PLAN SHEET.

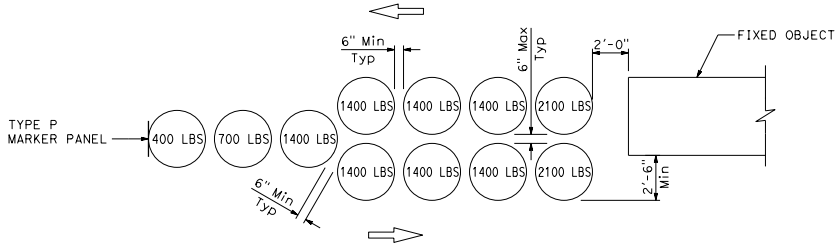

ARRAY 'B11'

Approach speed less than 45 mph

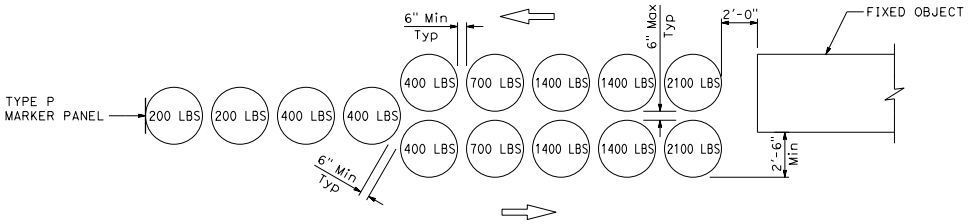

ARRAY 'B14'

Approach speed 45 mph or more

NOTES:

1. (xxx) Indicates module layout and weight of sand in pounds for each module. Module spacing is based on the greater diameter of the modules.
2. All sand weights are nominal. Sand must contain no more than 7 percent water.
3. Bidirectional crash cushion arrays may be angled toward approaching traffic. Amount of angle not to exceed 10 degrees.
4. Modules shall be placed on hot mix asphalt, epoxy mortar or concrete surface. Modules to be placed on surfacing with greater than 5% downward slope shall be seated as shown.
5. Weight of sand and outline of each module shall be painted on the surface at each module location.
6. Module blocking, epoxied to the deck surface, is required for all modules placed on bridge decks. Two acceptable alternatives are shown. Other alternatives recommended by the manufacturer and approved by the Engineer will be accepted.
7. Approach speeds indicated conform to NCHRP Report 350 criteria.

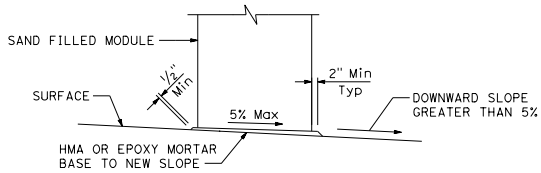

ELEVATION

SLOPED SEAT DETAIL

See Note 4

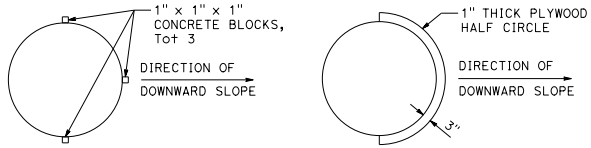

ALTERNATIVE 1 ALTERNATIVE 2

PLAN

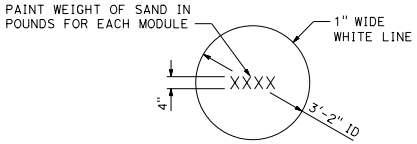

PAINTING DETAIL

See Note 5

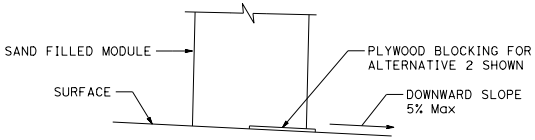

ELEVATION

BRIDGE DECK MODULE BLOCKING DETAILS

See Note 6

STATE OF CALIFORNIA
DEPARTMENT OF TRANSPORTATION

CRASH CUSHION SAND FILLED (BIDIRECTIONAL)

NO SCALE

A81C

2026 STANDARD PLAN A81C

7-1-26

Return to Table of Contents

Dist	COUNTY	ROUTE	POST MILES TOTAL PROJECT	SHEET No.	TOTAL SHEETS

REGISTERED CIVIL ENGINEER

September 18, 2026

PLANS APPROVAL DATE

REGISTERED PROFESSIONAL ENGINEER Georgiy Tokmakov No. C91904 Exp. 3-31-27 CIVIL STATE OF CALIFORNIA

THE STATE OF CALIFORNIA OR ITS OFFICERS OR AGENTS SHALL NOT BE RESPONSIBLE FOR THE ACCURACY OR COMPLETENESS OF SCANNED COPIES OF THIS PLAN SHEET.

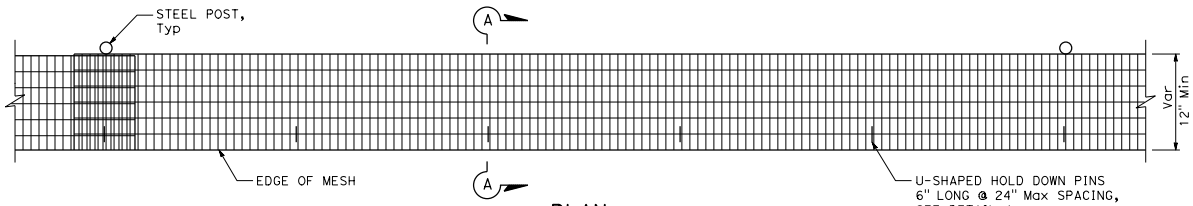

PLAN

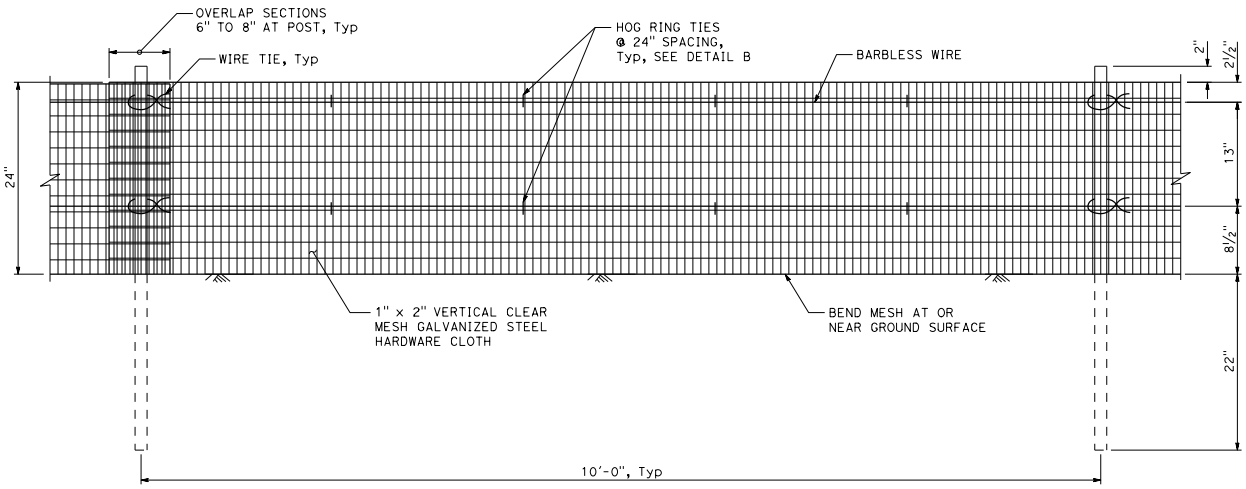

ELEVATION

NOTES:

1. Exact locations for temporary desert tortoise fence are shown on the plans.
2. Horizontal portion of hardware cloth must be on habitat side of posts.

LEGEND:

DESERT TORTOISE HABITAT

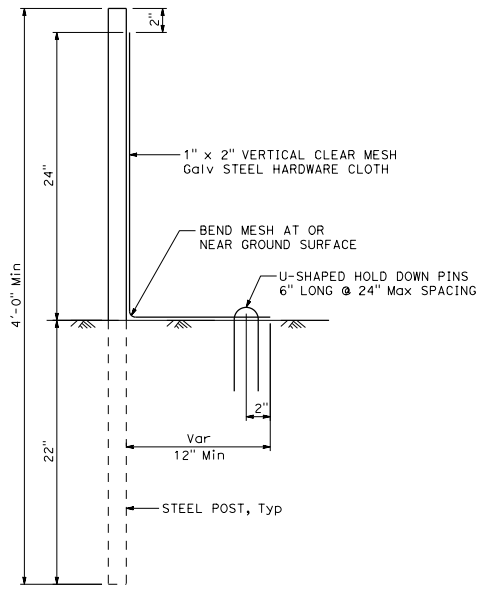

SECTION A-A

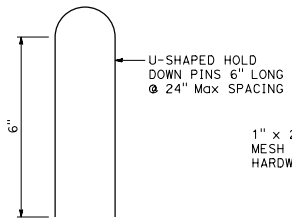

DETAIL A

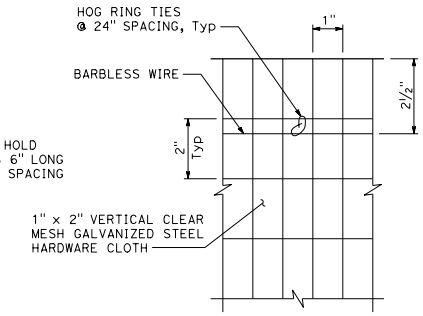

DETAIL B

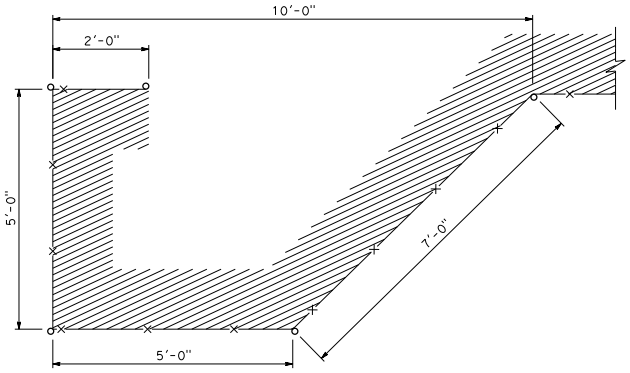

PLAN

REDIRECTIONAL CONFIGURATION

STATE OF CALIFORNIA
DEPARTMENT OF TRANSPORTATION

TEMPORARY DESERT TORTOISE FENCE

NO SCALE

A84A

2026 STANDARD PLAN A84A

7-1-26

Return to Table of Contents

Dist	COUNTY	ROUTE	POST MILES TOTAL PROJECT	SHEET No.	TOTAL SHEETS

REGISTERED CIVIL ENGINEER

September 18, 2026

PLANS APPROVAL DATE

REGISTERED PROFESSIONAL ENGINEER Georgiy Tokmakov No. C91904 Exp. 3-31-27 CIVIL STATE OF CALIFORNIA

THE STATE OF CALIFORNIA OR ITS OFFICERS OR AGENTS SHALL NOT BE RESPONSIBLE FOR THE ACCURACY OR COMPLETENESS OF SCANNED COPIES OF THIS PLAN SHEET.

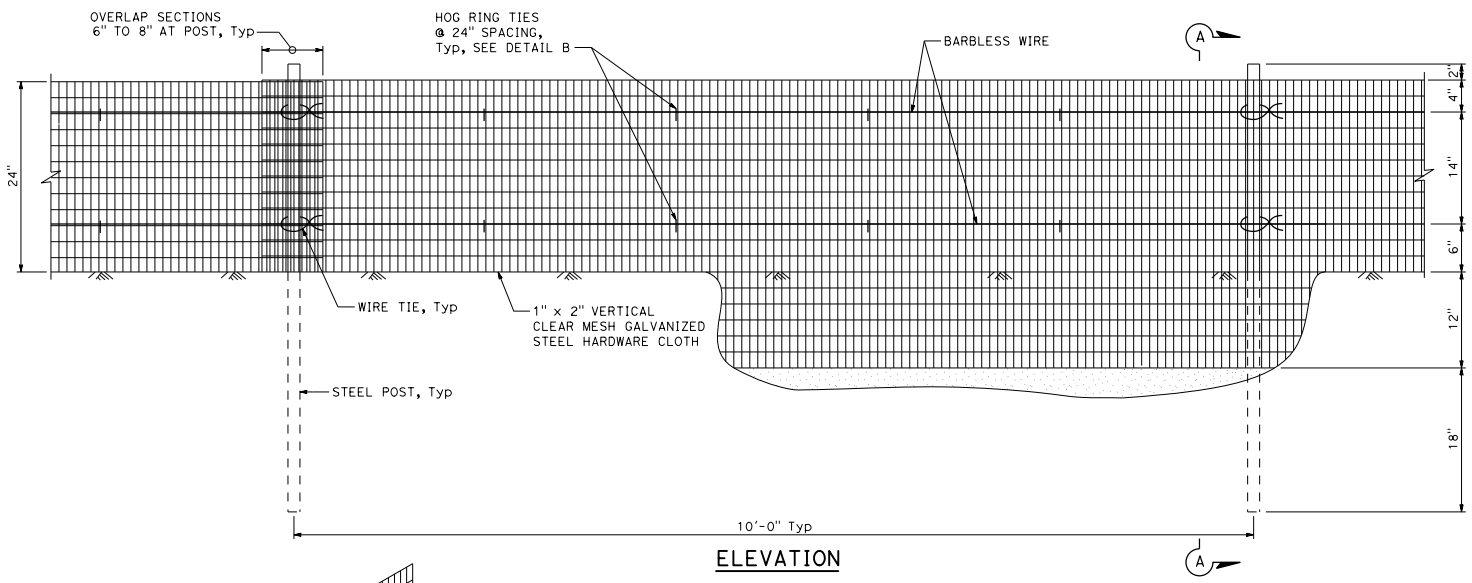

ELEVATION

NOTE:

1. Exact locations for desert tortoise fence are shown on the plans.

LEGEND:

DESERT TORTOISE HABITAT

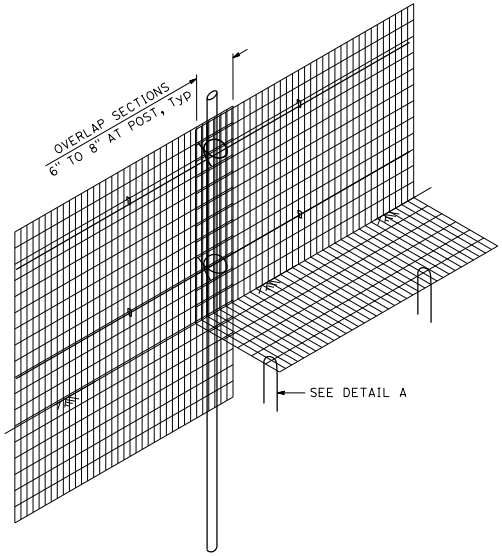

FENCE TRANSITION FOR
BEDROCK OR CALICHE SUBSTRATE

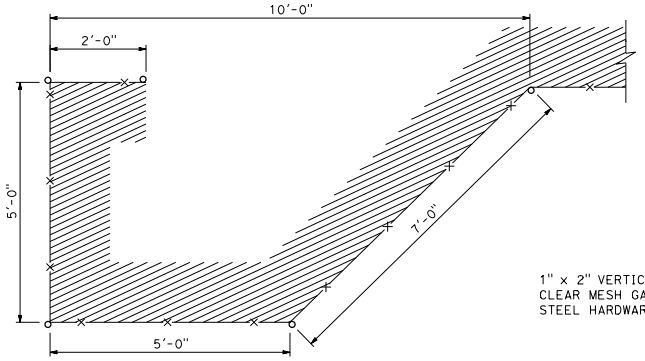

PLAN

REDIRECTIONAL CONFIGURATION

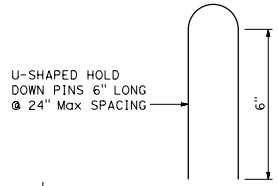

DETAIL A

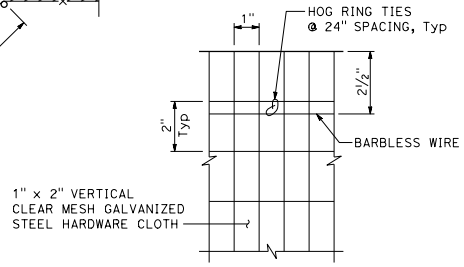

DETAIL B

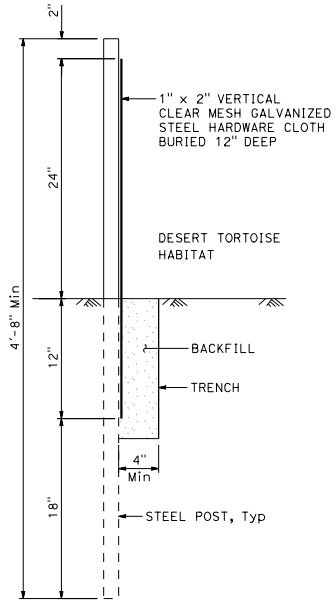

SECTION A-A

STATE OF CALIFORNIA
DEPARTMENT OF TRANSPORTATION

DESERT TORTOISE FENCE

NO SCALE

A84B

2026 STANDARD PLAN A84B

7-1-26

Return to Table of Contents

Dist	COUNTY	ROUTE	POST MILES TOTAL PROJECT	SHEET No.	TOTAL SHEETS

REGISTERED CIVIL ENGINEER

September 18, 2026
PLANS APPROVAL DATE

REGISTERED PROFESSIONAL ENGINEER Georgiy Tokmakov No. C91904 Exp. 3-31-27 CIVIL STATE OF CALIFORNIA

THE STATE OF CALIFORNIA OR ITS OFFICERS OR AGENTS SHALL NOT BE RESPONSIBLE FOR THE ACCURACY OR COMPLETENESS OF SCANNED COPIES OF THIS PLAN SHEET.

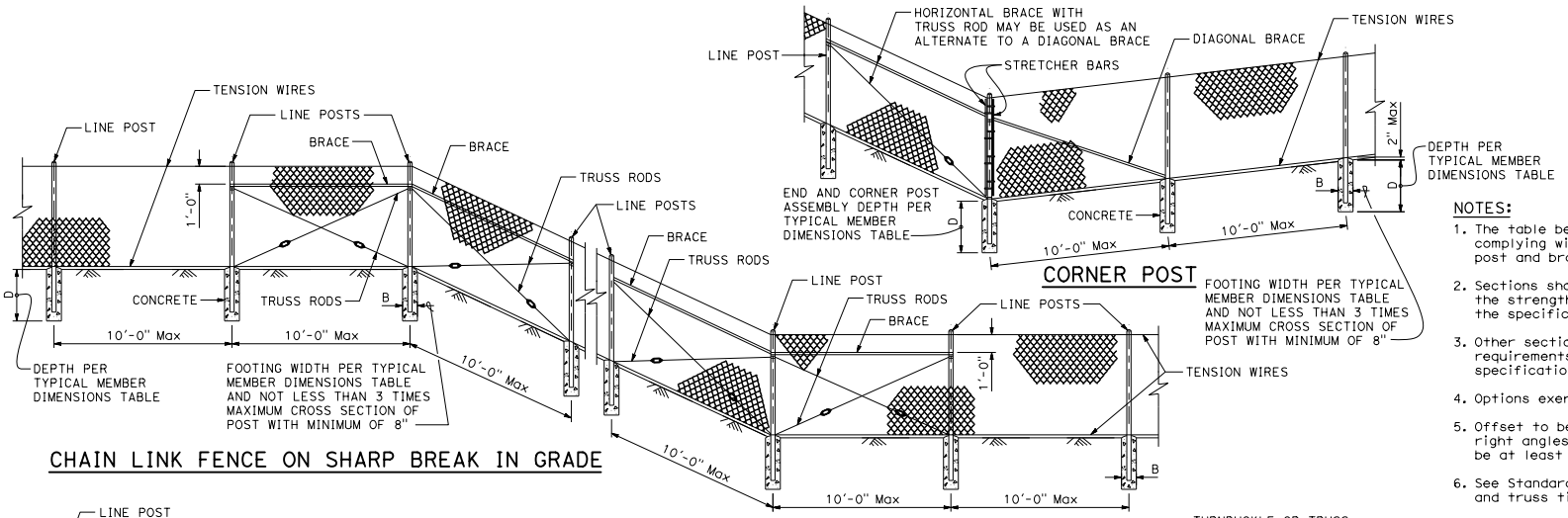

CHAIN LINK FENCE ON SHARP BREAK IN GRADE

CORNER POST

NOTES:

1. The table below shows minimum sized posts and braces complying with the specifications. Larger or heavier post and brace sizes may be used upon approval.
2. Sections shown in the tables must also comply with the strength requirements and other provisions of the specifications.
3. Other sections which comply with the strength requirements and other provisions of the specifications may be used upon approval.
4. Options exercised shall be uniform on any one project.
5. Offset to be 2'-0" at monument locations, measured at right angles to R/W lines. Taper to achieve offset to be at least 20'-0" long.
6. See Standard Plan A85B for brace, stretcher bar, and truss tightener details.

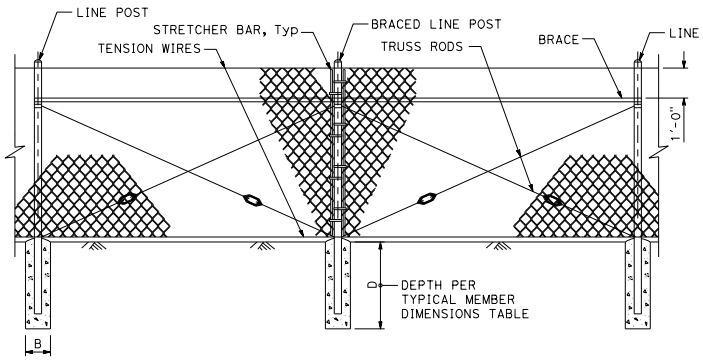

BRACED LINE POST INSTALLATION

Braced line post at intervals not exceeding 1000'.

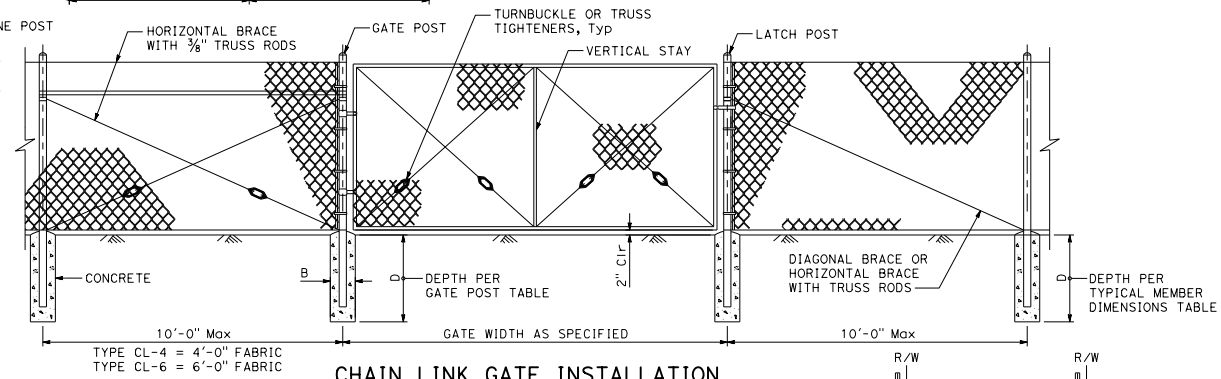

CHAIN LINK GATE INSTALLATION

Maximum Gate Width is 12'-0". Vertical Stay is required in middle of gate greater than 8'-0" in width.

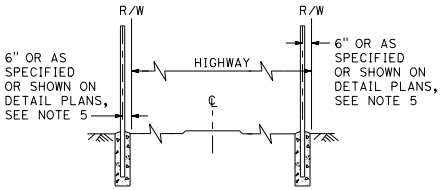

OTHER HIGHWAYS FREEWAYS

FENCE LOCATION

GATE POST

FENCE HEIGHT (Max)	SLATTED	B	D	ROUND PIPE: ROUND OD PIPE	GROUP 1A WEIGHT (lb/ft)	GROUP 1C WEIGHT (lb/ft)
5'-0"	NO	12"	2'-6"	3.50"	7.58	5.71
6'-0"	NO	12"	2'-6"	3.50"	7.58	5.71
8'-0"	NO	12"	3'-0"	3.50"	7.58	5.71
10'-0"	NO	14"	3'-6"	3.50"	7.58	5.71
5'-0"	YES	12"	3'-0"	4.00"	9.12	6.56
6'-0"	YES	14"	3'-6"	4.50"	10.80	-
8'-0"	YES	18"	3'-6"	5.56"	14.60	-
10'-0"	YES	20"	4'-0"	6.63"	19.00	-

Above post dimensions and weights are minimums. Larger sizes may be used upon approval.

TYPICAL MEMBER DIMENSIONS (See Notes)

FENCE HEIGHT (Max)	SLATTED	B	D	LINE POSTS: ROUND PIPE: ROUND OD PIPE	GROUP 1A WEIGHT (lb/ft)	GROUP 1C WEIGHT (lb/ft)	ROLL FORMED: SECTION	WEIGHT (lb/ft)	BRACES: ROUND PIPE: ROUND OD PIPE	GROUP 1A WEIGHT (lb/ft)	GROUP 1C WEIGHT (lb/ft)	ROLL FORMED: SECTION	WEIGHT (lb/ft)
5'-0"	NO	8"	2'-6"	1.90"	2.72	2.28	1.875" x 1.625"	1.85	1.90"	2.72	2.28	1.625" x 1.250"	1.35
6'-0"	NO	10"	2'-6"	2.38"	3.66	3.12	1.875" x 1.625"	2.40	2.38"	3.66	3.12	1.625" x 1.250"	1.35
8'-0"	NO	12"	3'-0"	2.88"	5.80	4.64	3.250" x 2.500"	4.50	2.38"	3.66	3.12	1.625" x 1.250"	1.35
10'-0"	NO	14"	3'-6"	3.50"	7.58	5.71	3.250" x 2.500"	4.50	2.88"	5.80	4.64	1.625" x 1.250"	1.35
5'-0"	YES	12"	3'-0"	4.00"	9.12	6.56	N/A	-	2.38"	3.66	3.12	N/A	-
6'-0"	YES	14"	3'-0"	4.50"	10.80	-	N/A	-	2.38"	3.66	3.12	N/A	-
8'-0"	YES	18"	3'-6"	5.56"	14.60	-	N/A	-	2.38"	3.66	3.12	N/A	-
10'-0"	YES	20"	4'-0"	6.63"	19.00	-	N/A	-	2.88"	5.80	4.64	N/A	-

STATE OF CALIFORNIA
DEPARTMENT OF TRANSPORTATION

CHAIN LINK FENCE

NO SCALE

A85

2026 STANDARD PLAN A85

7-1-26

Return to Table of Contents

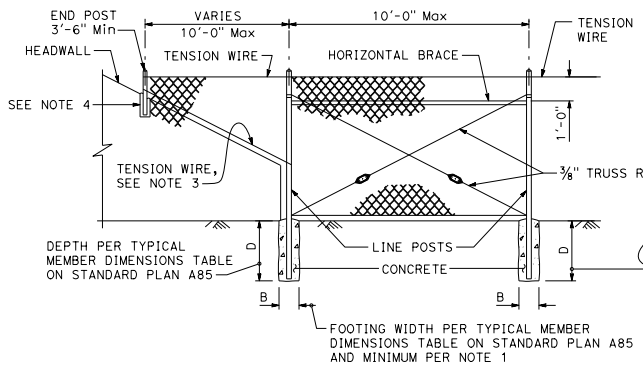

METHOD OF TYING FENCE TO HEADWALL

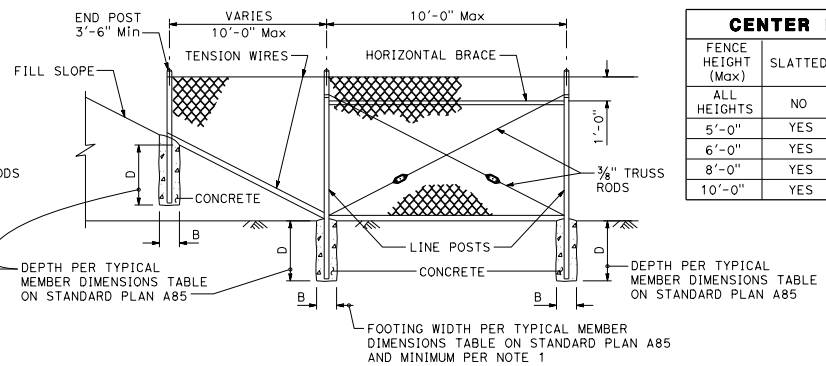

METHOD OF ERECTING FENCE FOR FILL SLOPE

CENTER POST		
FENCE HEIGHT (Max)	SLATTED	D
ALL HEIGHTS	NO	1'-6"
5'-0"	YES	3'-0"
6'-0"	YES	3'-0"
8'-0"	YES	3'-6"
10'-0"	YES	4'-0"

Dist	COUNTY	ROUTE	POST MILES TOTAL PROJECT	SHEET No.	TOTAL SHEETS

REGISTERED CIVIL ENGINEER

September 18, 2026
PLANS APPROVAL DATE

REGISTERED PROFESSIONAL ENGINEER
Georgiy Tokmakov
No. C91904
Exp. 3-31-27
CIVIL
STATE OF CALIFORNIA

THE STATE OF CALIFORNIA OR ITS OFFICERS OR AGENTS SHALL NOT BE RESPONSIBLE FOR THE ACCURACY OR COMPLETENESS OF SCANNED COPIES OF THIS PLAN SHEET.

NOTES:

1. B is not less than 3 times maximum cross section of post with minimum of 8".
2. See Standard Plan A85 for chain link fencing dimensions.
3. See Detail A on Standard Plan A86B for connection at headwall.
4. See Detail D on Standard Plan A86B for connection at headwall.

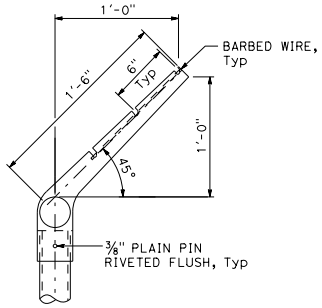

LINE POST

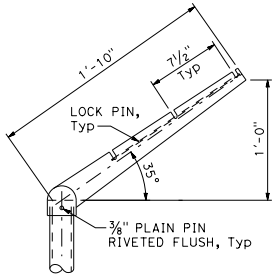

CORNER POST

BARBED WIRE POST TOP

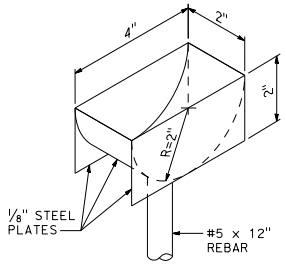

PLUNGER CUP DETAIL

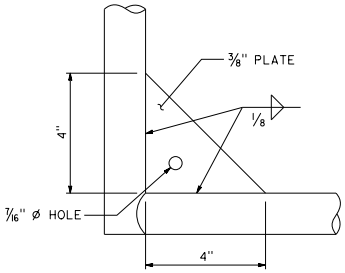

GUSSET DETAIL

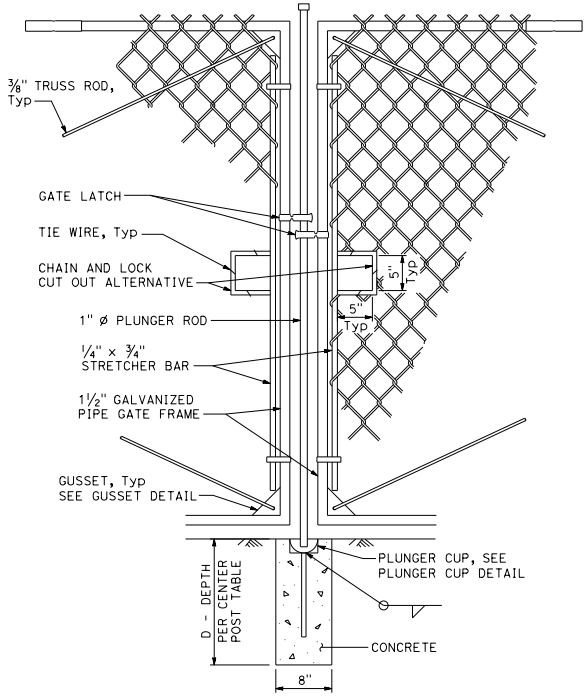

DOUBLE GATE WITH REMOVABLE CENTER POST

Each gate maximum width is 12'-0"

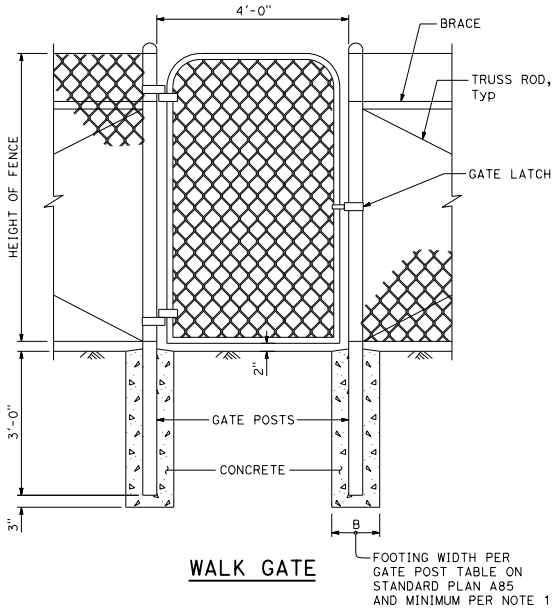

WALK GATE

STATE OF CALIFORNIA
DEPARTMENT OF TRANSPORTATION

CHAIN LINK FENCE DETAILS

NO SCALE

A85A

7-1-26

Return to Table of Contents

Dist	COUNTY	ROUTE	POST MILES TOTAL PROJECT	SHEET No.	TOTAL SHEETS

REGISTERED CIVIL ENGINEER

September 18, 2026
PLANS APPROVAL DATE

REGISTERED PROFESSIONAL ENGINEER
Georgiy Tokmakov
No. C91904
Exp. 3-31-27
CIVIL
STATE OF CALIFORNIA

THE STATE OF CALIFORNIA OR ITS OFFICERS OR AGENTS SHALL NOT BE RESPONSIBLE FOR THE ACCURACY OR COMPLETENESS OF SCANNED COPIES OF THIS PLAN SHEET.

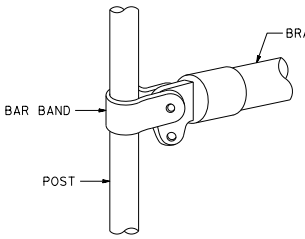

BRACE RAIL

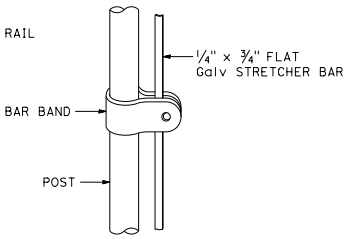

STRETCHER BAR

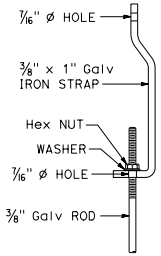

TRUSS TIGHTENER

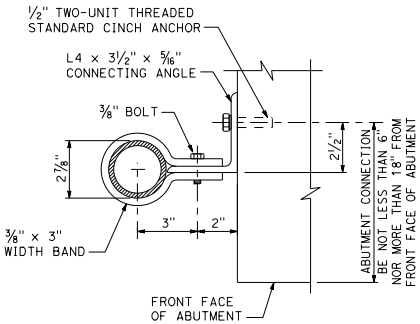

ABUTMENT CONNECTION

NOTES:

1. All material for abutment connection to be galvanized.
2. The chain link fabric shall be replaced by barbed wire strands at 12" maximum centers between the double posts.
3. When the width of the culvert makes it necessary to anchor a post to the top of the culvert, a cast iron shoe or other device approved by the Engineer shall be used.
4. Fencing over stream and around headwall may also use barbed wire or wire mesh fencing with either wood post or steel post installation.
5. See Standard Plan A85 for chain link fence dimensions. See Standard Plan A86 for barbed wire and wire mesh fence dimensions and for wood post and steel post installation.

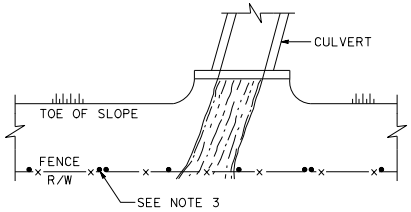

PLAN

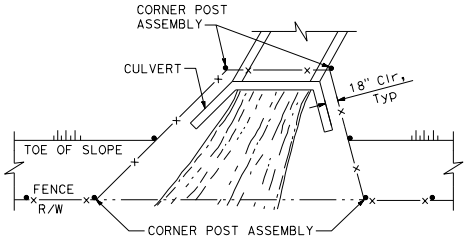

PLAN

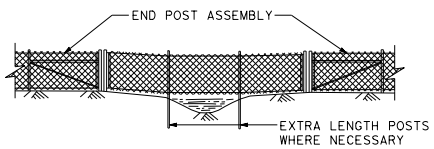

ELEVATION

INSTALLATION OVER STREAM

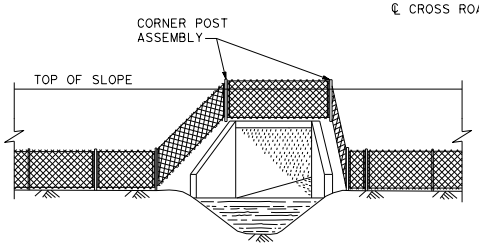

ELEVATION

INSTALLATION AROUND HEADWALL

See Note 4

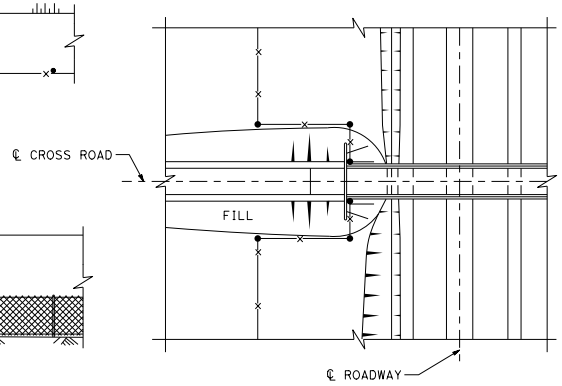

PLAN OF ROADWAY - OVERCROSSING

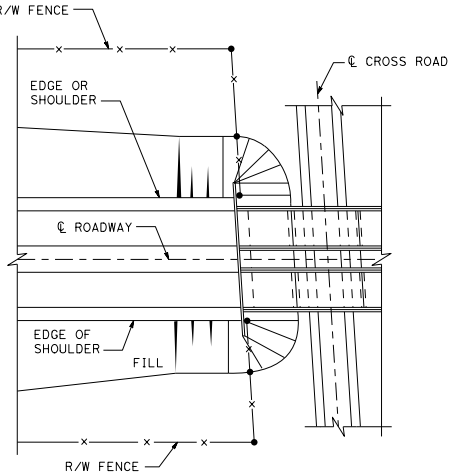

PLAN OF ROADWAY - UNDERCROSSING

TYPICAL INSTALLATION AT BRIDGES

STATE OF CALIFORNIA
DEPARTMENT OF TRANSPORTATION

CHAIN LINK FENCE DETAILS

NO SCALE

A85B

2026 STANDARD PLAN A85B

7-1-26

Return to Table of Contents

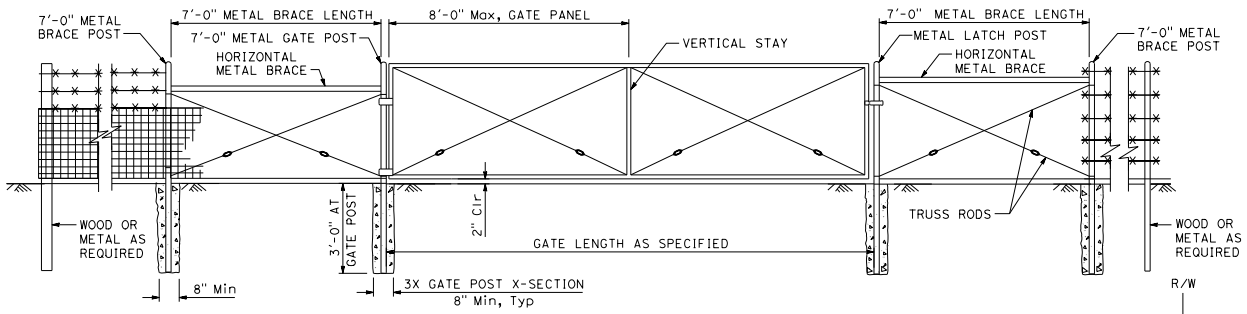

WIRE MESH GATE INSTALLATION FOR EITHER WOOD OR METAL POST FENCES

WIRE MESH GATE POST
(SEE NOTE 3)

GATE WIDTHS	NOMINAL Dia	WEIGHT PER FOOT
UP THRU 6'-0"	2½"	5.79 LB
OVER 6'-0" THRU 12'-0"	3½"	9.11 LB
OVER 12'-0" THRU 18'-0"	5"	14.62 LB
OVER 18'-0" TO 24'-0" Max	6"	18.97 LB

Dist	COUNTY	ROUTE	POST MILES TOTAL PROJECT	SHEET No.	TOTAL SHEETS

REGISTERED CIVIL ENGINEER

September 18, 2026
PLANS APPROVAL DATE

REGISTERED PROFESSIONAL ENGINEER Georgiy Tokmakov No. C91904 Exp. 3-31-27 CIVIL STATE OF CALIFORNIA

THE STATE OF CALIFORNIA OR ITS OFFICERS OR AGENTS SHALL NOT BE RESPONSIBLE FOR THE ACCURACY OR COMPLETENESS OF SCANNED COPIES OF THIS PLAN SHEET.

NOTES:

1. Metal end post and end bar shown. Use wood end post and end bar for wood post installation.
2. Offset to be 2'-0" at monument locations, measured at right angles to R/W lines. Taper to achieve offset to be at least 20'-0" long.
3. Post dimensions and weights are minimums. Larger sizes may be used on approval of the Engineer.

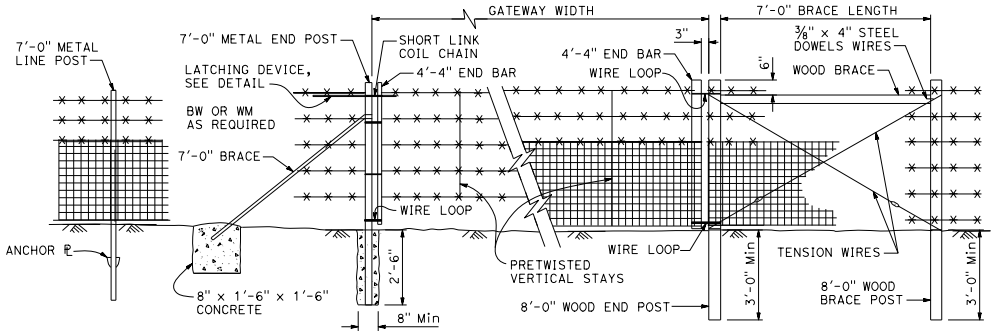

METAL POST INSTALLATION

GATEWAY

WOOD POST INSTALLATION

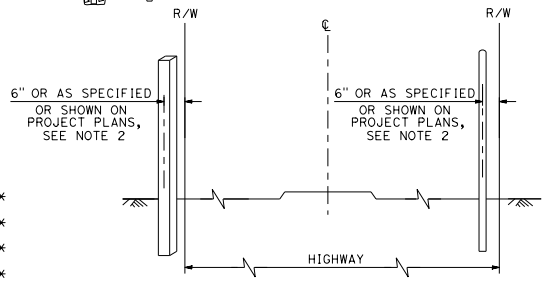

OTHER HIGHWAYS FREEWAYS

FENCE LOCATION

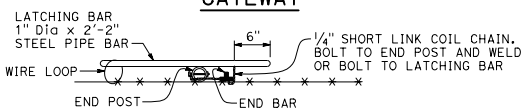

LATCHING DEVICE FOR GATEWAYS

See Note 1

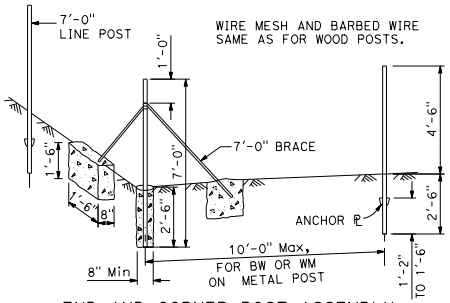

END AND CORNER POST ASSEMBLY

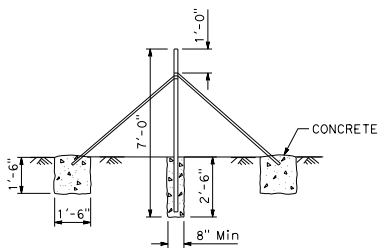

PULL POST ASSEMBLY

At 660'-0" maximum intervals for WM fence.
At 1320'-0" maximum intervals for BW fence.

METAL POST INSTALLATION

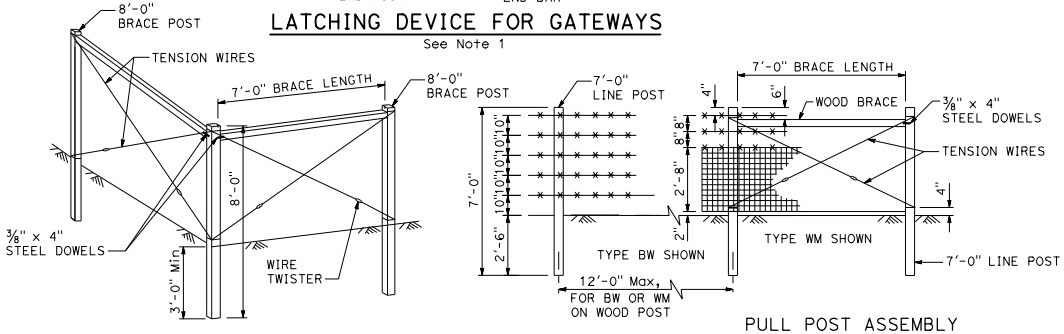

END AND CORNER POST ASSEMBLY

PULL POST ASSEMBLY

At 660'-0" maximum intervals for WM fence.
At 1320'-0" maximum intervals for BW fence.

WOOD POST INSTALLATION

STATE OF CALIFORNIA
DEPARTMENT OF TRANSPORTATION

BARBED WIRE AND WIRE MESH FENCES

NO SCALE

A86

2026 STANDARD PLAN A86

7-1-26

Return to Table of Contents

Dist	COUNTY	ROUTE	POST MILES TOTAL PROJECT	SHEET No.	TOTAL SHEETS

REGISTERED CIVIL ENGINEER

September 18, 2026

PLANS APPROVAL DATE

REGISTERED PROFESSIONAL ENGINEER Georgiy Tokmakov No. C91904 Exp. 3-31-27 CIVIL STATE OF CALIFORNIA

THE STATE OF CALIFORNIA OR ITS OFFICERS OR AGENTS SHALL NOT BE RESPONSIBLE FOR THE ACCURACY OR COMPLETENESS OF SCANNED COPIES OF THIS PLAN SHEET.

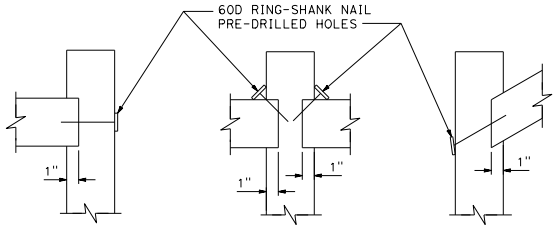

WOOD MORTISE DETAIL

See Note 3

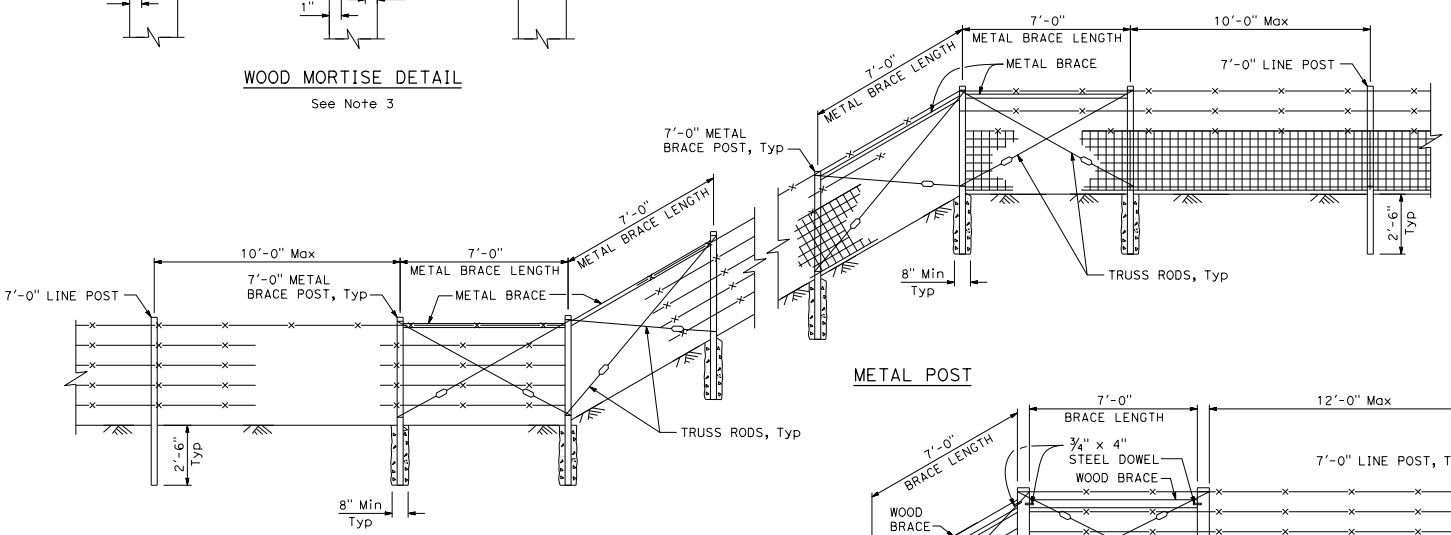

METAL POST

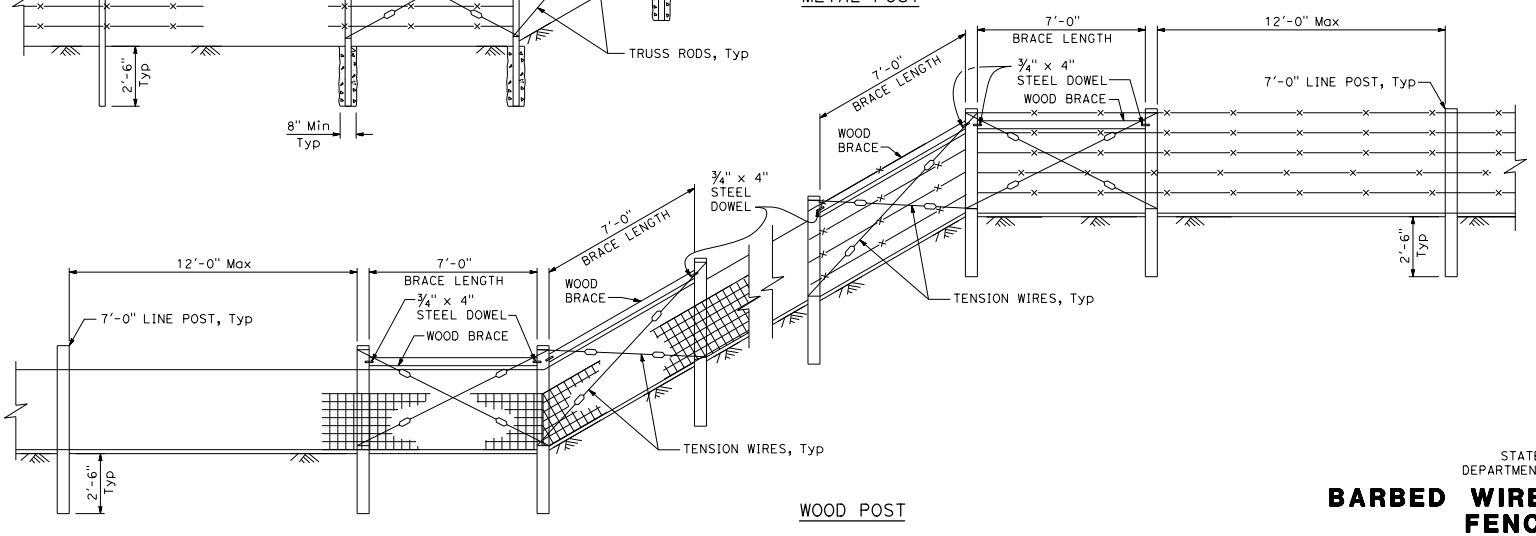

WOOD POST

FENCE ON SHARP BREAK IN GRADE

NOTES:

1. Offset to be 2'-0" at monument locations, measured at right angles to R/W lines. Taper to achieve offset to be at least 20'-0" long.
2. See Standard Plan A86 for barbed wire and wire mesh dimensions and for steel post and wood post dimensions and weight.
3. Use wood posts when specified in the Special Provisions or shown on the Project Plans.

LEGEND:

WIRE MESH FENCING

BARBED WIRE FENCING

STATE OF CALIFORNIA
DEPARTMENT OF TRANSPORTATION

BARBED WIRE AND WIRE MESH FENCE DETAIL ON SHARP BREAK IN GRADE

NO SCALE

A86A

2026 STANDARD PLAN A86A

7-1-26

Return to Table of Contents

Dist	COUNTY	ROUTE	POST MILES TOTAL PROJECT	SHEET No.	TOTAL SHEETS

REGISTERED CIVIL ENGINEER

September 18, 2026

PLANS APPROVAL DATE

REGISTERED PROFESSIONAL ENGINEER Georgiy Tokmakov No. C91904 Exp. 3-31-27 CIVIL STATE OF CALIFORNIA

THE STATE OF CALIFORNIA OR ITS OFFICERS OR AGENTS SHALL NOT BE RESPONSIBLE FOR THE ACCURACY OR COMPLETENESS OF SCANNED COPIES OF THIS PLAN SHEET.

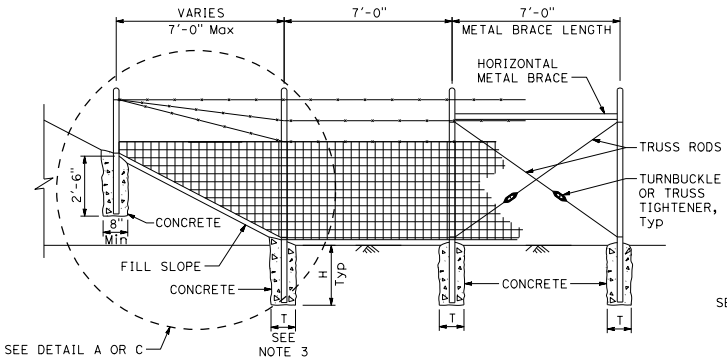

METAL POST

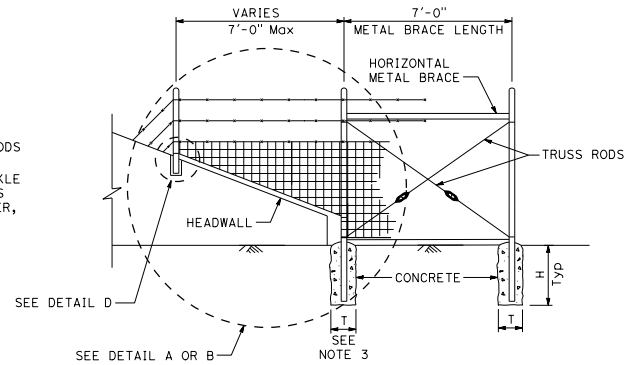

METAL POST

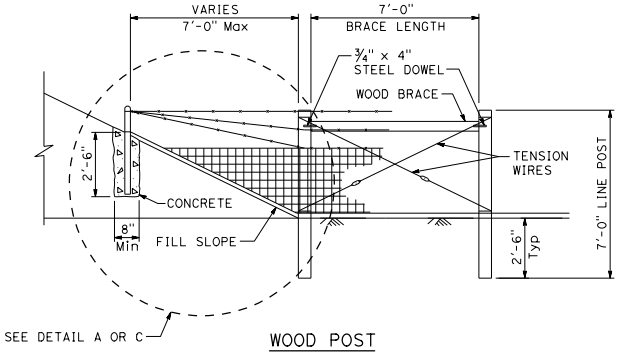

WOOD POST

METHOD OF ERECTING FENCE FOR FILL SLOPE

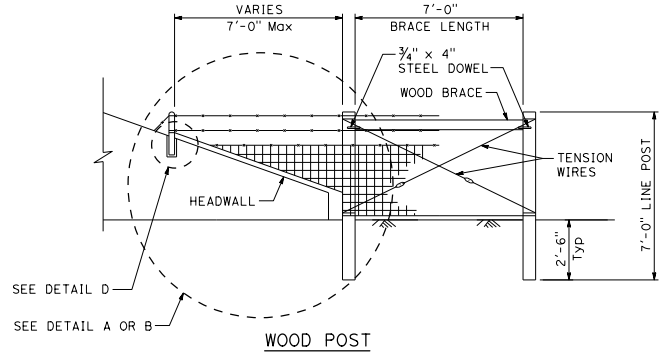

WOOD POST

METHOD OF TYING FENCE TO HEADWALL

NOTES:

1. Wire Mesh fencing shown, can also use barbed wire fencing.
2. See Standard Plan A86 for wire mesh and barbed wire fence dimensions.
3. T is not less than 3 times maximum cross section of post with minimum of 8".
4. H is 2'-6" for fabric less than 5'-0" high.
   H is 3'-0" for fabric 5'-0" and over.
5. May be used when thickness of concrete is 1'-0" or more.
6. May be used when thickness of concrete is 10" or more.

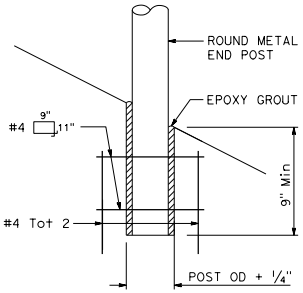

ALTERNATIVE DETAIL D

See Note 6

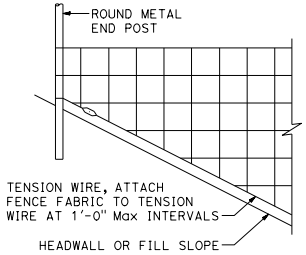

DETAIL A

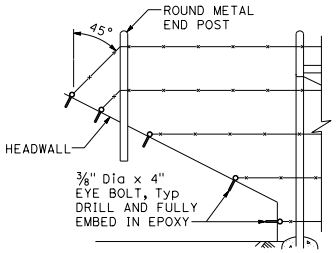

DETAIL B

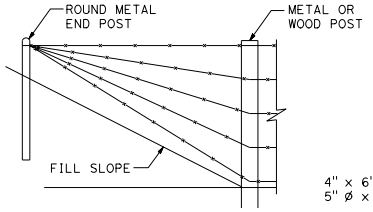

DETAIL C

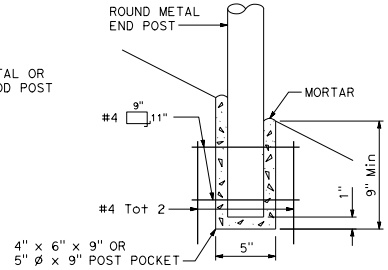

DETAIL D

See Note 5

STATE OF CALIFORNIA
DEPARTMENT OF TRANSPORTATION

BARBED WIRE AND WIRE MESH FENCE DETAILS

NO SCALE

A86B

2026 STANDARD PLAN A86B

7-1-26

Return to Table of Contents

Dist	COUNTY	ROUTE	POST MILES TOTAL PROJECT	SHEET No.	TOTAL SHEETS

REGISTERED CIVIL ENGINEER

September 18, 2026
PLANS APPROVAL DATE

REGISTERED PROFESSIONAL ENGINEER
Georgiy Tokmakov
No. C91904
Exp. 3-31-27
CIVIL
STATE OF CALIFORNIA

THE STATE OF CALIFORNIA OR ITS OFFICERS OR AGENTS SHALL NOT BE RESPONSIBLE FOR THE ACCURACY OR COMPLETENESS OF SCANNED COPIES OF THIS PLAN SHEET.

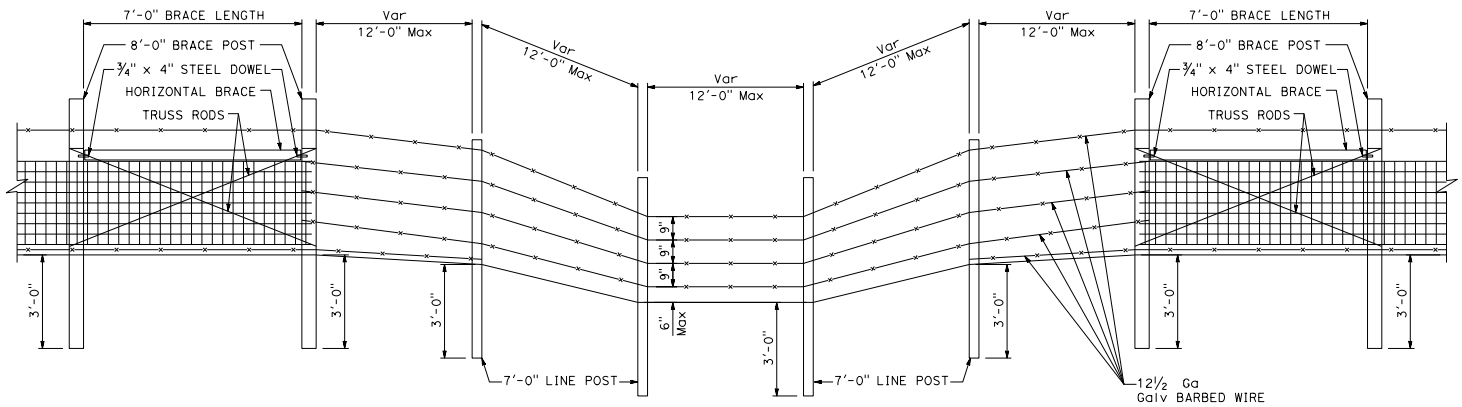

TYPE I

NOTES:

1. Type I ditch crossing shows wood posts. Steel posts may be used in place of wood.
2. Ditch crossings show wire mesh fencing. Barbed wire fencing may be used in place of wire mesh.
3. See Standard Plan A86 for wire mesh and barbed wire fence dimensions.
4. See Standard Plan A86 for steel post installation.

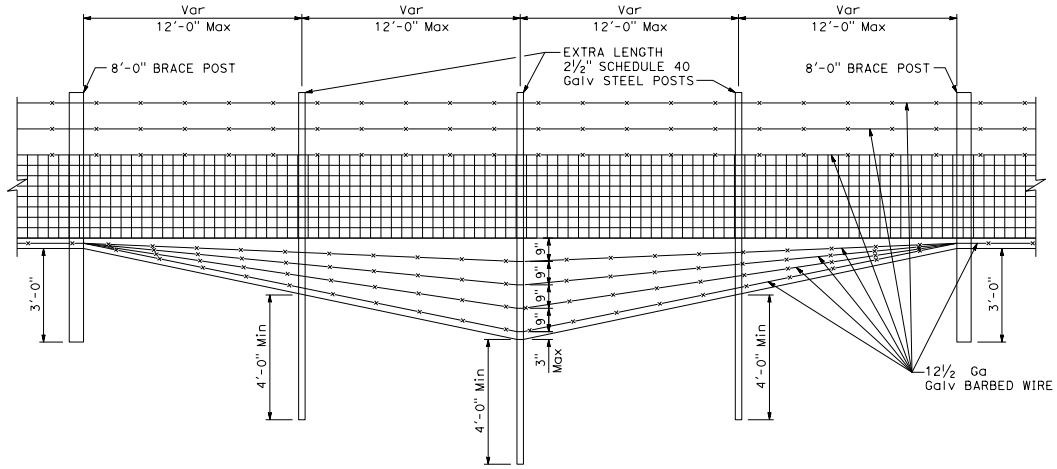

TYPE II

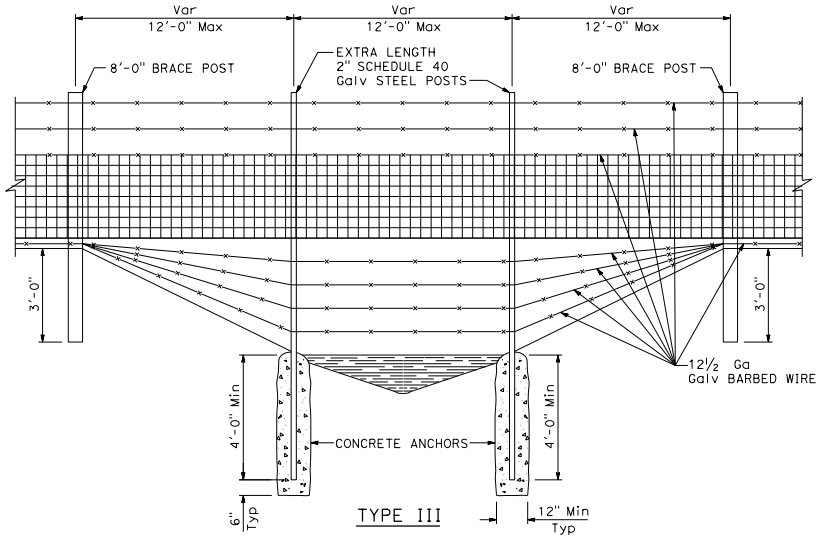

TYPE III

DITCH CROSSINGS

STATE OF CALIFORNIA
DEPARTMENT OF TRANSPORTATION

BARBED WIRE AND WIRE MESH FENCE DETAILS AT DITCH CROSSING

NO SCALE

A86C

2026 STANDARD PLAN A86C

7-1-26

Return to Table of Contents

Dist	COUNTY	ROUTE	POST MILES TOTAL PROJECT	SHEET No.	TOTAL SHEETS

REGISTERED CIVIL ENGINEER

September 18, 2026
PLANS APPROVAL DATE

REGISTERED PROFESSIONAL ENGINEER
Georgiy Tokmakov
No. C91904
Exp. 3-31-27
CIVIL
STATE OF CALIFORNIA

THE STATE OF CALIFORNIA OR ITS OFFICERS OR AGENTS SHALL NOT BE RESPONSIBLE FOR THE ACCURACY OR COMPLETENESS OF SCANNED COPIES OF THIS PLAN SHEET.

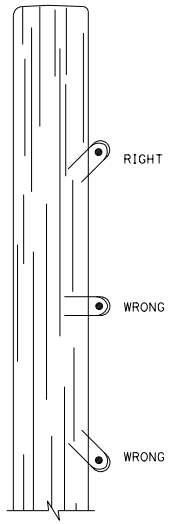

DRIVE STAPLES AT ANGLE

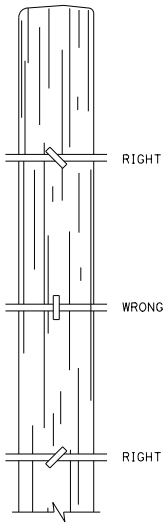

DO NOT DRIVE STAPLES PARALLEL TO SIDE OF POST

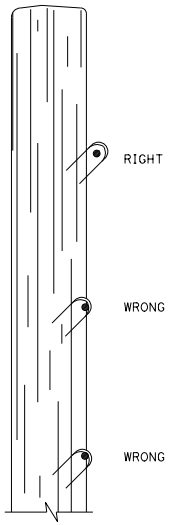

LEAVE WIRE LOOSE IN STAPLE

LINE POST STAPLING DETAILS

(Apply to rectangular/square and round posts)
Do not staple vertical wire in wire mesh.

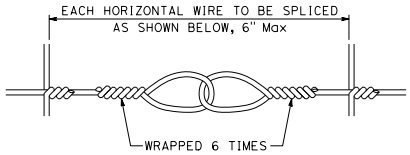

SPLICE DETAIL FOR BARBED WIRE/WIRE MESH FENCE

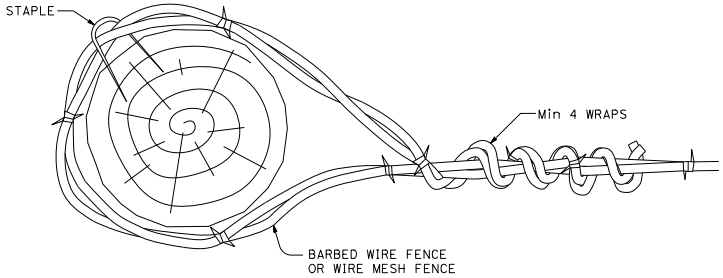

END, LATCH, PULL, AND CORNER POST DETAIL

(Also applies to rectangular/square posts)

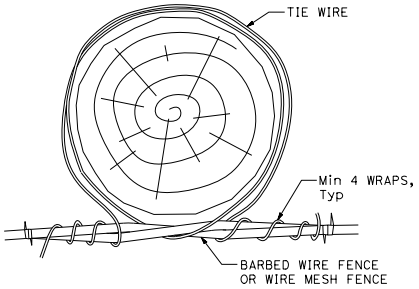

OPTION A

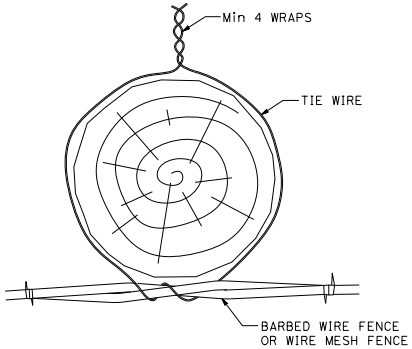

OPTION B

LINE POST WIRE TIE OPTION DETAILS

(Option details also apply to rectangular/square posts)

STATE OF CALIFORNIA
DEPARTMENT OF TRANSPORTATION

BARBED WIRE AND WIRE MESH FENCE MISCELLANEOUS DETAILS

NO SCALE

A86D

2026 STANDARD PLAN A86D

7-1-26

Return to Table of Contents

Dist	COUNTY	ROUTE	POST MILES TOTAL PROJECT	SHEET No.	TOTAL SHEETS

REGISTERED CIVIL ENGINEER

September 18, 2026
PLANS APPROVAL DATE

REGISTERED PROFESSIONAL ENGINEER Georgiy Tokmakov No. C91904 Exp. 3-31-27 CIVIL STATE OF CALIFORNIA

THE STATE OF CALIFORNIA OR ITS OFFICERS OR AGENTS SHALL NOT BE RESPONSIBLE FOR THE ACCURACY OR COMPLETENESS OF SCANNED COPIES OF THIS PLAN SHEET.

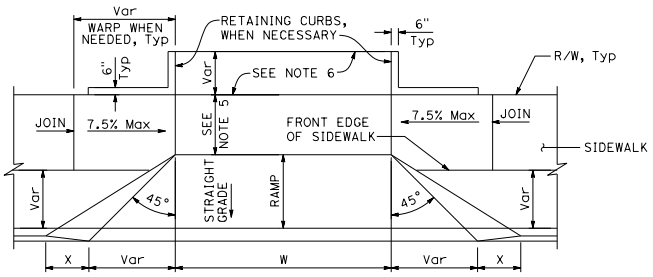

PLAN

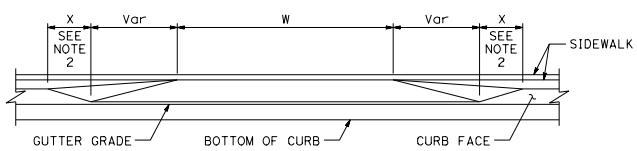

ELEVATION

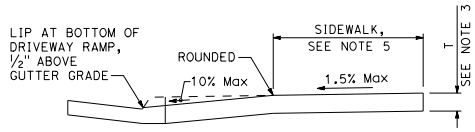

CASE A

Typical driveway, sidewalk not depressed

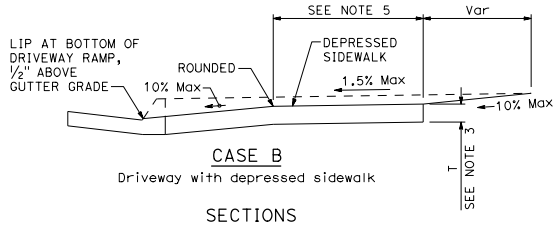

CASE B

Driveway with depressed sidewalk

SECTIONS

DRIVEWAYS

NOTES:

1. Case A driveway section typically applies.
2. X=3'-0" except for curb heights over 10" where 4:1 slopes shall be used on curb slope.
3. Sidewalk and ramp thickness "T" at driveway shall be 4" for residental and 6" for commercial.
4. Difference in slope of the driveway ramp and the slope of a line between the gutter and a point on the roadway 5'-0" from gutter line shall not exceed 15%. Reduce driveway ramp slope, not gutter slope, where required.
5. Minimum width of clear passageway for sidewalk shall be 4'-2".
6. Retaining curbs and acquisition of construction easement may be necessary for narrow sidewalks or curb heights in excess of 6".
7. Across the pedestrian route at curb ramp locations, the gutter pan slope shall not exceed 1" of depth for each 2'-0" of width.

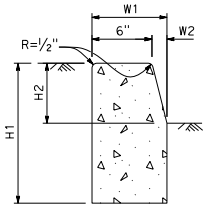

TYPE A1 CURBS

See Table A

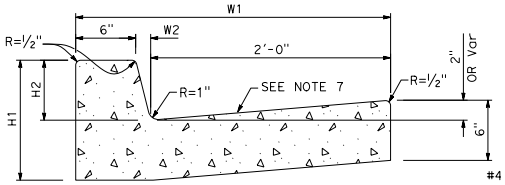

TYPE A2 CURBS

See Table A

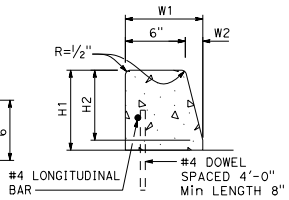

TYPE A3 CURBS

Superimposed on existing pavement, see Table A

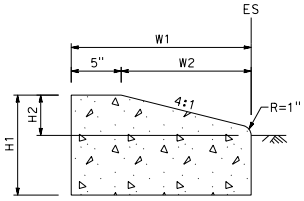

TYPE D CURBS

See Table A

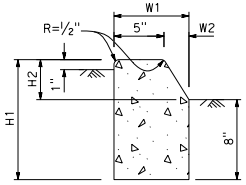

TYPE B1 CURBS

See Table A

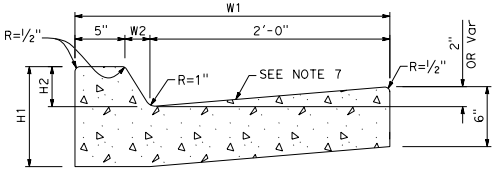

TYPE B2 CURBS

See Table A

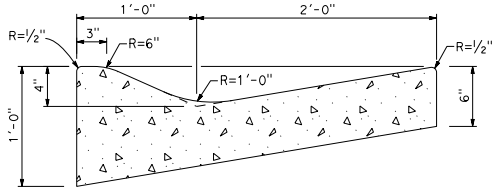

TYPE E CURB

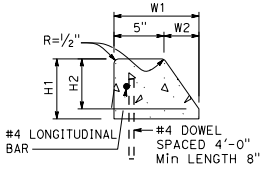

TYPE B3 CURBS

Superimposed on existing pavement, see Table A

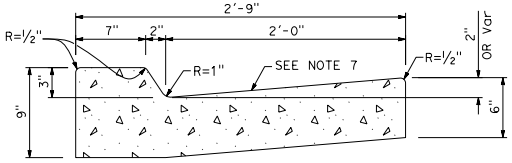

TYPE B4 CURBS

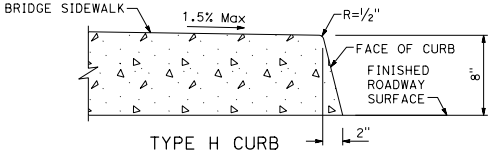

TYPE H CURB

On Bridges

CURBS

TABLE A

CURB TYPE	DIMENSIONS H1	H2	W1	W2
A1-6	1'-2"	6"	7½"	1½"
A1-8	1'-4"	8"	8"	2"
A2-6	1'-0"	6"	2'-7½"	1½"
A2-8	1'-2"	8"	2'-8"	2"
A3-6	6"	5"	7¼"	1¼"
A3-8	8"	7"	7¾"	1¾"
B1-4	1'-0"	4"	7½"	2½"
B1-6	1'-2"	6"	9"	4"
B2-4	10"	4"	2'-7½"	2½"
B2-6	1'-0"	6"	2'-9"	4"
B3-4	4"	3"	7"	2"
B3-6	6"	5"	8½"	3½"
D-4	10"	4"	1'-6"	1'-1"
D-6	1'-0"	6"	2'-2"	1'-9"

CURB QUANTITIES

TYPE	CUBIC YARDS PER LINEAR FOOT
A1-6	0.02585
A1-8	0.03084
A2-6	0.05903
A2-8	0.06379
A3-6	0.01036
A3-8	0.01435
B1-4	0.02185
B1-6	0.02930
B2-4	0.05515
B2-6	0.06171
B3-4	0.00641
B3-6	0.01074
B4	0.05709
D-4	0.04083
D-6	0.06804
E	0.06661

STATE OF CALIFORNIA
DEPARTMENT OF TRANSPORTATION

CURBS AND DRIVEWAYS

NO SCALE

A87A

2026 STANDARD PLAN A87A

7-1-26

Return to Table of Contents

Dist	COUNTY	ROUTE	POST MILES TOTAL PROJECT	SHEET No.	TOTAL SHEETS

REGISTERED CIVIL ENGINEER

September 18, 2026
PLANS APPROVAL DATE

REGISTERED PROFESSIONAL ENGINEER Joshua Lee No. C90456 Exp. 9-30-27 CIVIL STATE OF CALIFORNIA

THE STATE OF CALIFORNIA OR ITS OFFICERS OR AGENTS SHALL NOT BE RESPONSIBLE FOR THE ACCURACY OR COMPLETENESS OF SCANNED COPIES OF THIS PLAN SHEET.

DIKE QUANTITIES

TYPE	CUBIC YARDS PER LINEAR FOOT
A	0.0135
C	0.0038
D	0.0293
E	0.0130
F	0.0066

Quantities based on 5% cross slope.

NOTES:

1. For HMA shoulders only, extend top layer of HMA placed on the shoulder under dike with no joint at the ES. For projects with OGFC shoulders, do not extend OGFC under dike. See project plans for modified dike detail.
2. Case R applies to retrofit only projects where restrictive conditions do not provide enough width for Case F backfill.
3. Type A dike only to be used where restrictive slope conditions do not provide enough width to use Type D or Type E dike.
4. Fill and compact with excavated material to top of dike.
5. Use Type A or Type F dike, where dike is required with guardrail installations. See Standard Plan A77N4 for dike positioning details. See Standard Plan A77N3 for hinge point offsets with guardrail.

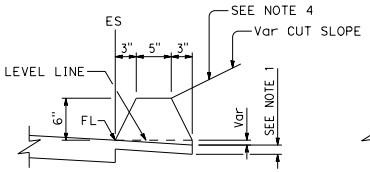

TYPE A
See Notes 3 and 5

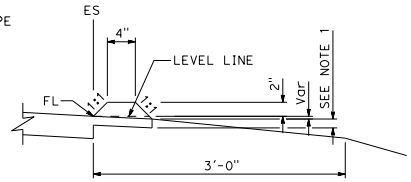

TYPE C

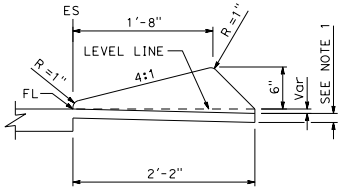

TYPE D

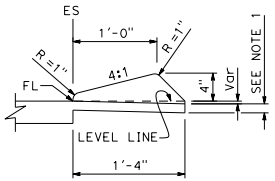

TYPE E

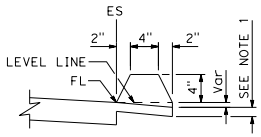

TYPE F
See Note 5

DIKES

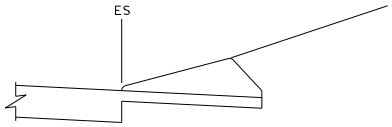

CASE C-1
Cut Slope

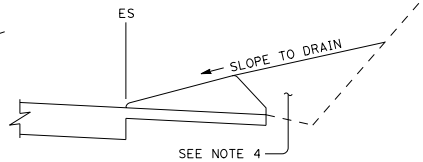

CASE C-2
Cut Slope

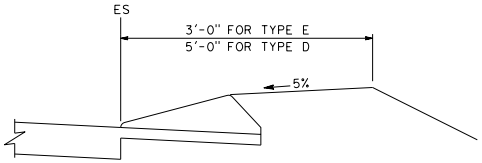

CASE F

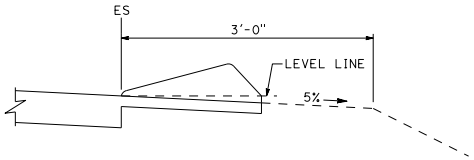

CASE R
See Note 2

TYPE D AND TYPE E BACKFILL DETAILS

STATE OF CALIFORNIA
DEPARTMENT OF TRANSPORTATION

HOT MIX ASPHALT DIKES

NO SCALE

A87B

7-1-26

2026 STANDARD PLAN A87B

Return to Table of Contents

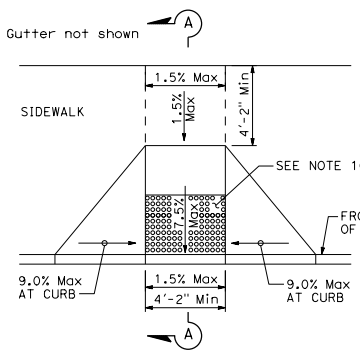

CASE A

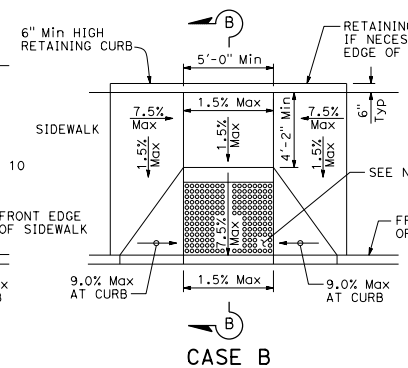

CASE B

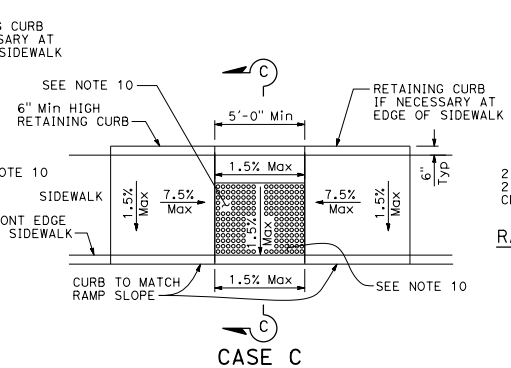

CASE C

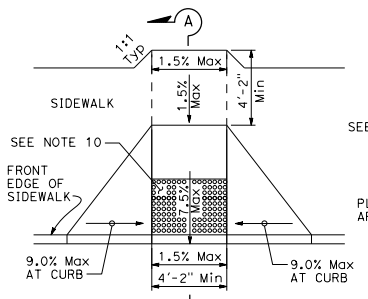

CASE D

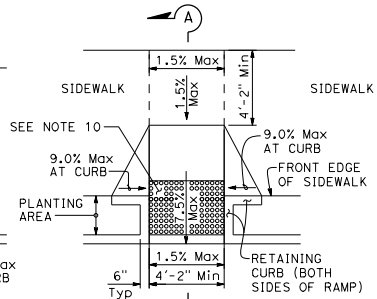

CASE E

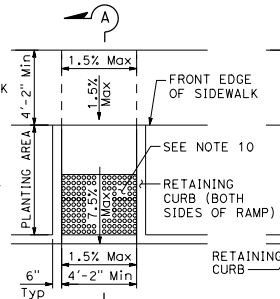

CASE F

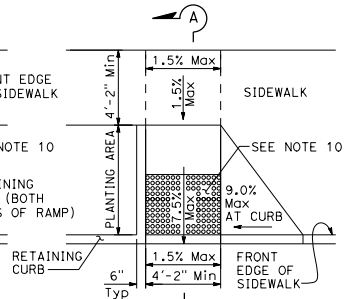

CASE G

See Note 4

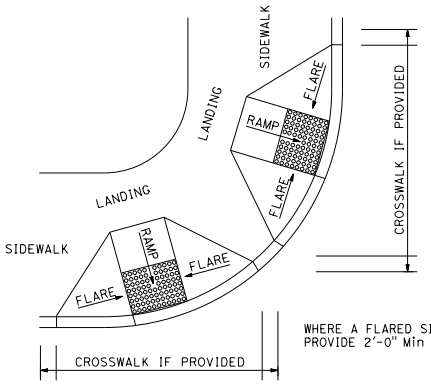

DETAIL A

TYPICAL TWO-RAMP CORNER INSTALLATION

See Note 1

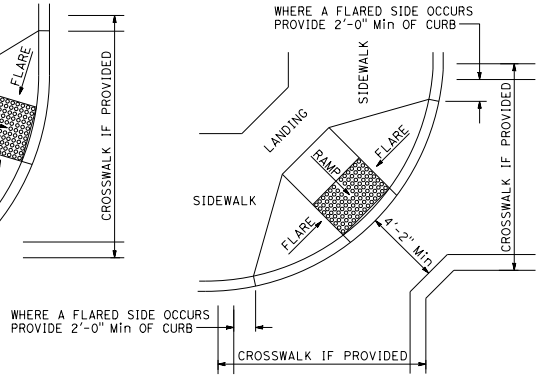

DETAIL B

TYPICAL ONE-RAMP CORNER INSTALLATION

See Notes 1 and 3

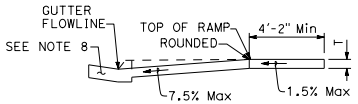

SECTION A-A

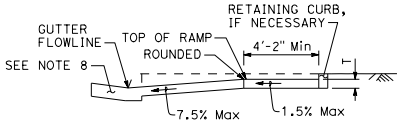

SECTION B-B

Depress entire sidewalk as required

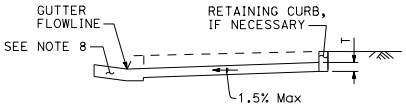

SECTION C-C

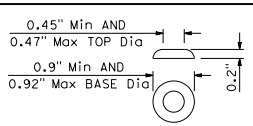

RAISED TRUNCATED DOME

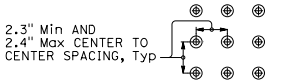

RAISED TRUNCATED DOME PATTERN (IN-LINE)

DETECTABLE WARNING SURFACE

See Note 10

NOTES:

1. As site conditions dictate, Case A through Case G curb ramps may be used for corner installations similar to those shown in Detail A and Detail B. The case of curb ramps used in Detail A do not have to be the same. Case A through Case G curb ramps also may be used at mid block locations, as site conditions dictate. For specific site condition configuration, including the conform to existing sidewalk, see Project Plans.
2. If distance from curb to back of sidewalk is too short to accommodate ramp and 4'-2" platform (landing) as shown in Case A, the sidewalk may be depressed longitudinally as in Case B or C or may be widened as in Case D.
3. When ramp is located in center of curb return, crosswalk configuration must be similar to that shown for Detail B.
4. As site conditions dictate, the retaining curb side and the flared side of the Case G ramp shall be constructed in reversed position.
5. The ramp portion of the curb ramp is a typical rectangle, unless modified in the Project Plans.
6. Side slope of ramp flares vary uniformly from a maximum of 9.0% at curb to conform with longitudinal sidewalk slope adjacent to top of the ramp, except in Case C and Case F.
7. The adjacent surfaces at transitions at curb ramps to walks, gutters, and streets shall be at the same level.
8. Counter slopes of adjoining gutters and road surfaces immediately adjacent to and within 24 inches of the curb ramp shall not be steeper than 1V:20H (5.0%). Gutter pan slope shall not exceed 1" of depth for each 2'-0" of width.
9. Transition gutter pan slope from 1" of depth for each 2'-0" of width to match typical gutter pan slope per Standard Plan A87A.
10. The detectable warning surface will be a rectangle as shown at back of curb, unless modified in the Project Plans. Curb ramps shall have a detectable warning surface that extends the full width and 3'-0" depth of the ramp. Detectable warning surfaces shall extend the full width of the ramp except a maximum gap of 1 inch is allowed on each side of the ramp.
11. Sidewalk and ramp thickness "T", shall be 3½" minimum.
12. Utility pull boxes, manholes, vaults and all other utility facilities within the boundaries of the curb ramp will be relocated or adjusted to grade by the owner prior to, or in conjunction with, curb ramp construction.
13. Detectable warning surface may have to be cut to allow removal of utility covers while maintaining detectable warning width and depth.

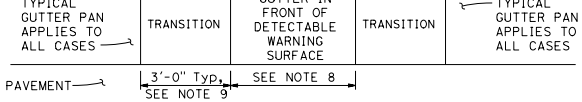

GUTTER PAN TRANSITION

STATE OF CALIFORNIA
DEPARTMENT OF TRANSPORTATION

CURB RAMP DETAILS

NO SCALE

Dist	COUNTY	ROUTE	POST MILES TOTAL PROJECT	SHEET No.	TOTAL SHEETS

REGISTERED CIVIL ENGINEER

September 18, 2026

PLANS APPROVAL DATE

REGISTERED PROFESSIONAL ENGINEER Georgiy Tokmakov No. C91904 Exp. 3-31-27 CIVIL STATE OF CALIFORNIA

THE STATE OF CALIFORNIA OR ITS OFFICERS OR AGENTS SHALL NOT BE RESPONSIBLE FOR THE ACCURACY OR COMPLETENESS OF SCANNED COPIES OF THIS PLAN SHEET.

2026 STANDARD PLAN A88A

A88A

7-1-26

Return to Table of Contents

Dist	COUNTY	ROUTE	POST MILES TOTAL PROJECT	SHEET No.	TOTAL SHEETS

REGISTERED CIVIL ENGINEER

September 18, 2026
PLANS APPROVAL DATE

REGISTERED PROFESSIONAL ENGINEER Georgiy Tokmakov No. C91904 Exp. 3-31-27 CIVIL STATE OF CALIFORNIA

THE STATE OF CALIFORNIA OR ITS OFFICERS OR AGENTS SHALL NOT BE RESPONSIBLE FOR THE ACCURACY OR COMPLETENESS OF SCANNED COPIES OF THIS PLAN SHEET.

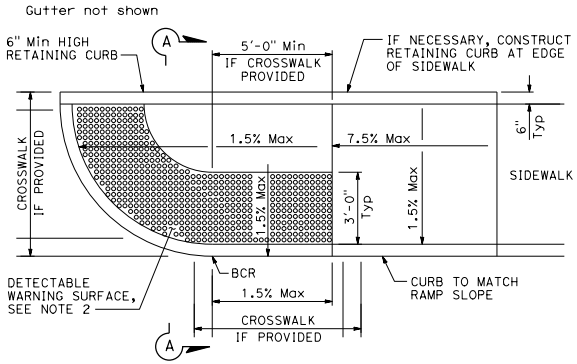

CASE CM CURB RAMP

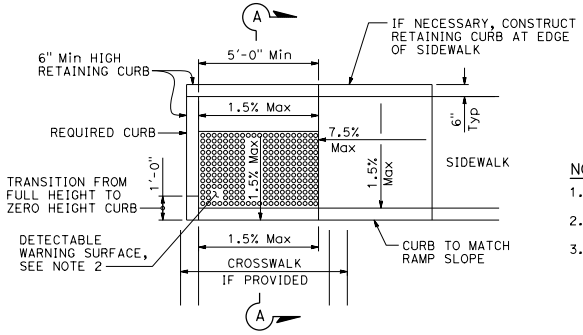

CASE CH CURB RAMP

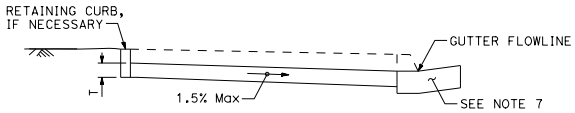

SECTION A-A

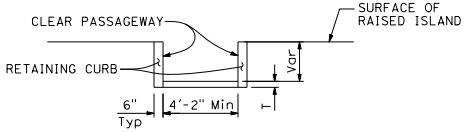

SECTION B-B

NOTES:

1. Sidewalk, ramp and passageway thickness "T", shall be 3½" minimum.
2. For details of detectable warning surfaces, see Standard Plan A88A.
3. Where an island passageway length is greater than or equal to 6'-0", but less than 8'-0", each detectable warning surface shall extend the full width and 2'-0" depth of the passageway length. Where an island passageway length is greater than or equal to 8'-0", each detectable warning surface shall extend the full width and 3'-0" depth of the passageway length. Detectable warning surfaces shall extend the full width of the island passageway except a maximum gap of 1" is allowed on each side of the passageway.
4. The adjacent surfaces at transitions at curb ramps to walks, gutters, and streets shall be at the same level.
5. Utility pull boxes, manholes, vaults and all other utility facilities within the boundaries of the curb ramp will be relocated or adjusted to grade by the owner prior to, or in conjunction with, curb ramp construction.
6. Detectable warning surface may have to be cut to allow removal of utility covers while maintaining detectable warning width and depth.
7. For additional curb ramp details, see Standard Plan A88A.
8. The detectable warning surface will be a rectangle as shown at the face of curb, unless modified in the Project Plans.

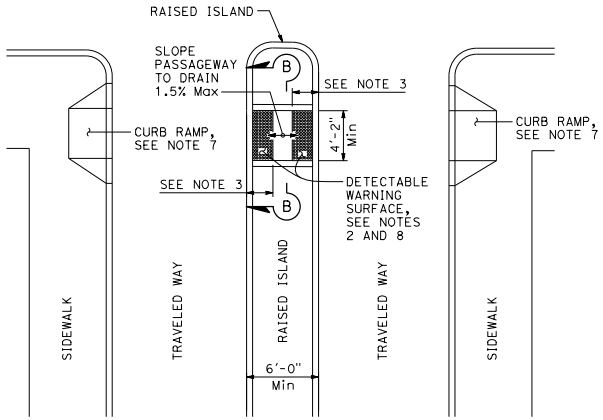

TYPE A PASSAGEWAY

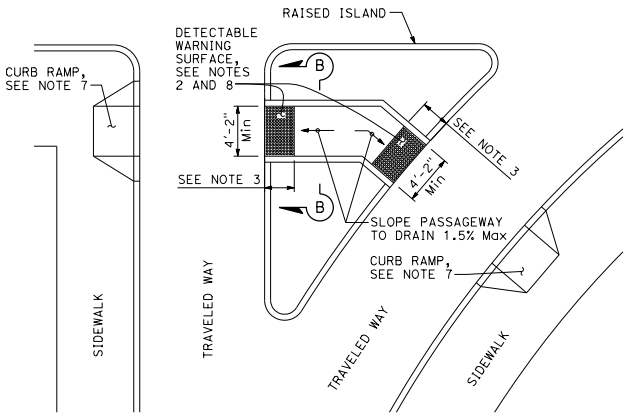

TYPE B PASSAGEWAY

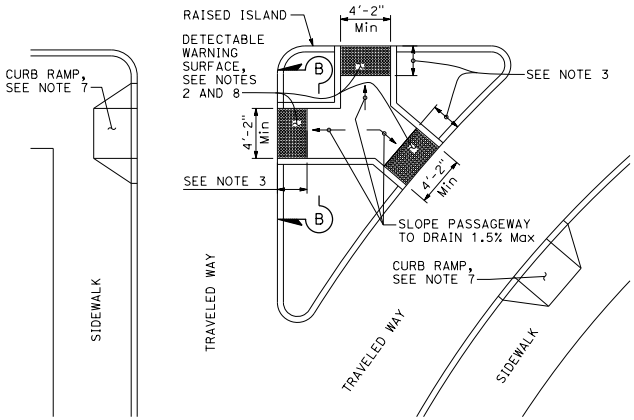

TYPE C PASSAGEWAY

STATE OF CALIFORNIA
DEPARTMENT OF TRANSPORTATION

CURB RAMP AND ISLAND PASSAGEWAY DETAILS

NO SCALE

A88B

2026 STANDARD PLAN A88B

7-1-26

Return to Table of Contents

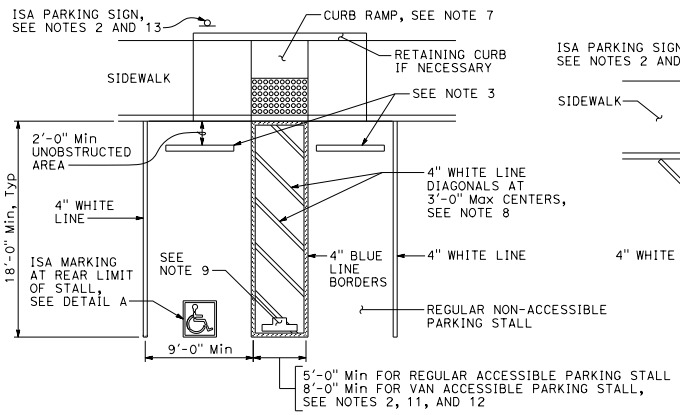

SINGLE PARKING STALL

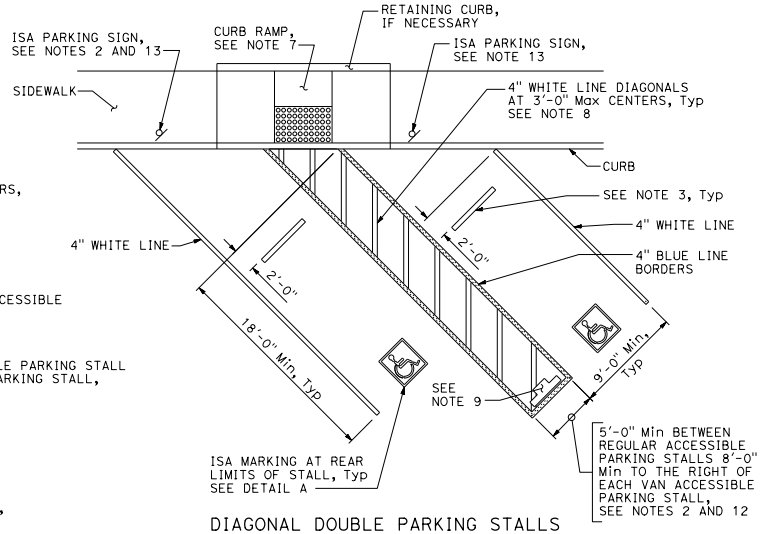

DIAGONAL DOUBLE PARKING STALLS

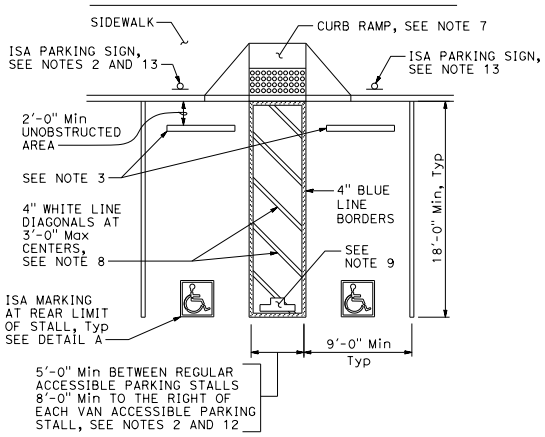

DOUBLE PARKING STALL

TABLE A	
TOTAL NUMBER OF PARKING SPACES PROVIDED IN PARKING FACILITY	MINIMUM NUMBER OF REQUIRED ACCESSIBLE PARKING SPACES
1-25	1
26-50	2
51-75	3
76-100	4
101-150	5
151-200	6
201-300	7
301-400	8
401-500	9
501-1000	2 PERCENT OF TOTAL
1001 AND OVER	20 PLUS 1 FOR EACH 100 OR FRACTION THEREOF OVER 1000

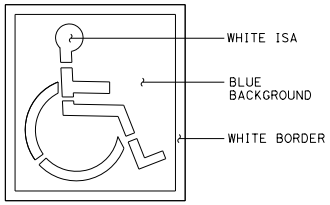

ISA MARKING, see Standard Plan A24C

DETAIL A

SIGN R99(CA)

SIGN R99C(CA), see Note 6

PLAQUE R99B(CA) SIGN R99(CA) with PLAQUE R99B(CA), see Note 6

SIGN R7-8b, see Notes 2 and 6

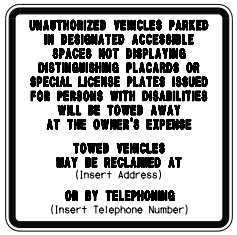

SIGN R100B(CA), see Note 10

OFF-STREET PARKING SIGNS

Parking lot or garage, see Note 6

Dist	COUNTY	ROUTE	POST MILES TOTAL PROJECT	SHEET No.	TOTAL SHEETS

REGISTERED CIVIL ENGINEER

September 18, 2026

PLANS APPROVAL DATE

REGISTERED PROFESSIONAL ENGINEER Georgiy Tokmakov No. C91904 Exp. 3-31-27 CIVIL STATE OF CALIFORNIA

THE STATE OF CALIFORNIA OR ITS OFFICERS OR AGENTS SHALL NOT BE RESPONSIBLE FOR THE ACCURACY OR COMPLETENESS OF SCANNED COPIES OF THIS PLAN SHEET.

NOTES:

1. Accessible parking spaces serving a particular building shall be located on the shortest accessible route of travel from adjacent parking to an accessible entrance. In parking facilities that do not serve a particular building, accessible parking shall be located on the shortest accessible route of travel to an accessible pedestrian entrance of the parking facility.
2. One in every six accessible off-street parking stalls, but not less than one, shall be served by an accessible aisle of 8'-0" minimum width and shall be signed van accessible. The R7-8b sign shall be mounted below the R99B(CA) plaque or the R99C(CA) sign.
3. In each parking stall, a curb or parking bumper shall be provided if required to prevent encroachment of vehicles over the required width of walkways. Parking stalls shall be so located that persons with disabilities are not compelled to wheel or walk behind parked vehicles other than their own. For more parking bumper requirements, see the Standard Specifications.
4. Parking spaces and access aisles shall be level with surface slopes not exceeding 1.5% in all directions.
5. Table A shall be used to determine the required number of accessible parking stalls in each parking lot or garage.
6. Where Plaque R99B(CA), Sign R99C(CA) or Sign R7-8b are installed, the bottom of the sign or plaque panel shall be a minimum of 7'-0" above the surrounding surface.
7. Curb ramps shall conform to the details shown on Standard Plan A88A.
8. Blue paint, instead of white may be used for marking accessibility aisles in areas where snow may cause white markings to not be visible.
9. The words "NO PARKING", shall be painted in white letters no less than 1'-0" high and located so that it is visible to traffic enforcement officials. See Standard Plan A90B for details of the "NO PARKING" pavement marking.
10. A R100B(CA) sign shall be posted in a conspicuous place at each entrance to off-street parking facilities or immediately adjacent to and visible from each stall. The sign shall include the address where the towed vehicle may be reclaimed and the telephone number of the local traffic law enforcement agency.
11. Where a single (non-van) accessible parking space is provided, the loading and unloading access aisle shall be on the passenger side of the vehicle as the vehicle is going forward into the parking space.
12. Where a van accessible parking space is provided, the loading and unloading access aisle shall be 8'-0" wide minimum, and shall be on the passenger side of the vehicle as the vehicle is going forward into the parking space.
13. Accessible Parking Only Sign shall be Sign R99C(CA) or Sign R99(CA) with Plaque R99B(CA).

LEGEND

ISA - International Symbol of Accessibility

STATE OF CALIFORNIA
DEPARTMENT OF TRANSPORTATION

ACCESSIBLE PARKING OFF-STREET

NO SCALE

A90A

2026 STANDARD PLAN A90A

7-1-26

Return to Table of Contents

Dist	COUNTY	ROUTE	POST MILES TOTAL PROJECT	SHEET No.	TOTAL SHEETS

REGISTERED CIVIL ENGINEER

September 18, 2026

PLANS APPROVAL DATE

REGISTERED PROFESSIONAL ENGINEER Georgiy Tokmakov No. C91904 Exp. 3-31-27 CIVIL STATE OF CALIFORNIA

THE STATE OF CALIFORNIA OR ITS OFFICERS OR AGENTS SHALL NOT BE RESPONSIBLE FOR THE ACCURACY OR COMPLETENESS OF SCANNED COPIES OF THIS PLAN SHEET.

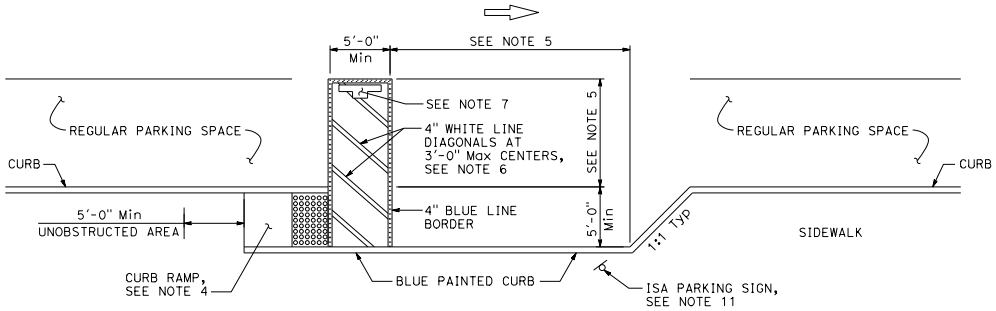

CONVENTIONAL

See Note 9

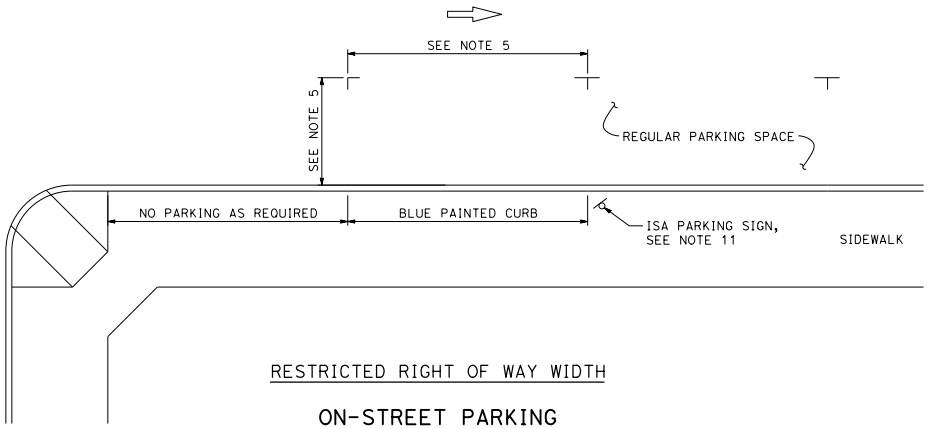

RESTRICTED RIGHT OF WAY WIDTH

ON-STREET PARKING

Parallel parking, see Note 10

PAVEMENT MARKING

See Note 7

SIGN R99(CA)

PLAQUE R99B(CA)
SIGN R99(CA) with PLAQUE R99B(CA), see Note 3

SIGN R99C(CA), see Note 3

NOTES:

1. Parking spaces shall be so located that persons with disabilities are not compelled to wheel or walk behind parked vehicles other than their own.
2. Surface slopes of accessible on-street parking spaces shall be the minimum feasible.
3. Where Plaque R99B(CA) or Sign R99C(CA) are installed, the bottom of the sign or plaque panel shall be a minimum of 7'-0" above the surrounding surface.
4. Curb ramps shall conform to the details shown on Standard Plan A88A.
5. Accessible on-street parking spaces shall not be smaller in length or width than that specified by the local jurisdiction for other parking spaces, but not less than 20'-0" in length and not less than 8'-0" in width.
6. Blue paint, instead of white may be used for marking accessibility aisles in areas where snow may cause white markings to not be visible.
7. The words "NO PARKING", shall be painted in white letters no less than 1'-0" high on a contrasting background and located so that it is visible to traffic enforcement officials. See Standard Plan A24E for square foot area for painting the words "NO PARKING".
8. There shall be no obstructions on the sidewalk adjacent to and for the full length of the parking space, except for the ISA parking sign shown.
9. The Conventional detail should be the primary choice of accessible on-street parking. However, if the sidewalk lacks adequate space to construct a standard curb ramp, the restricted right of way detail should be used.
10. If the Restricted Right of Way Width detail is selected and it conflicts with a bus stop or other uses, this detail may apply to the other end of the block.
11. Accessible Parking Only Sign shall be Sign R99C(CA) or Sign R99(CA) with Plaque R99B(CA).

LEGEND:

ISA - International Symbol of Accessibility

STATE OF CALIFORNIA
DEPARTMENT OF TRANSPORTATION

ACCESSIBLE PARKING ON-STREET

NO SCALE

A90B

2026 STANDARD PLAN A90B

7-1-26

Return to Table of Contents

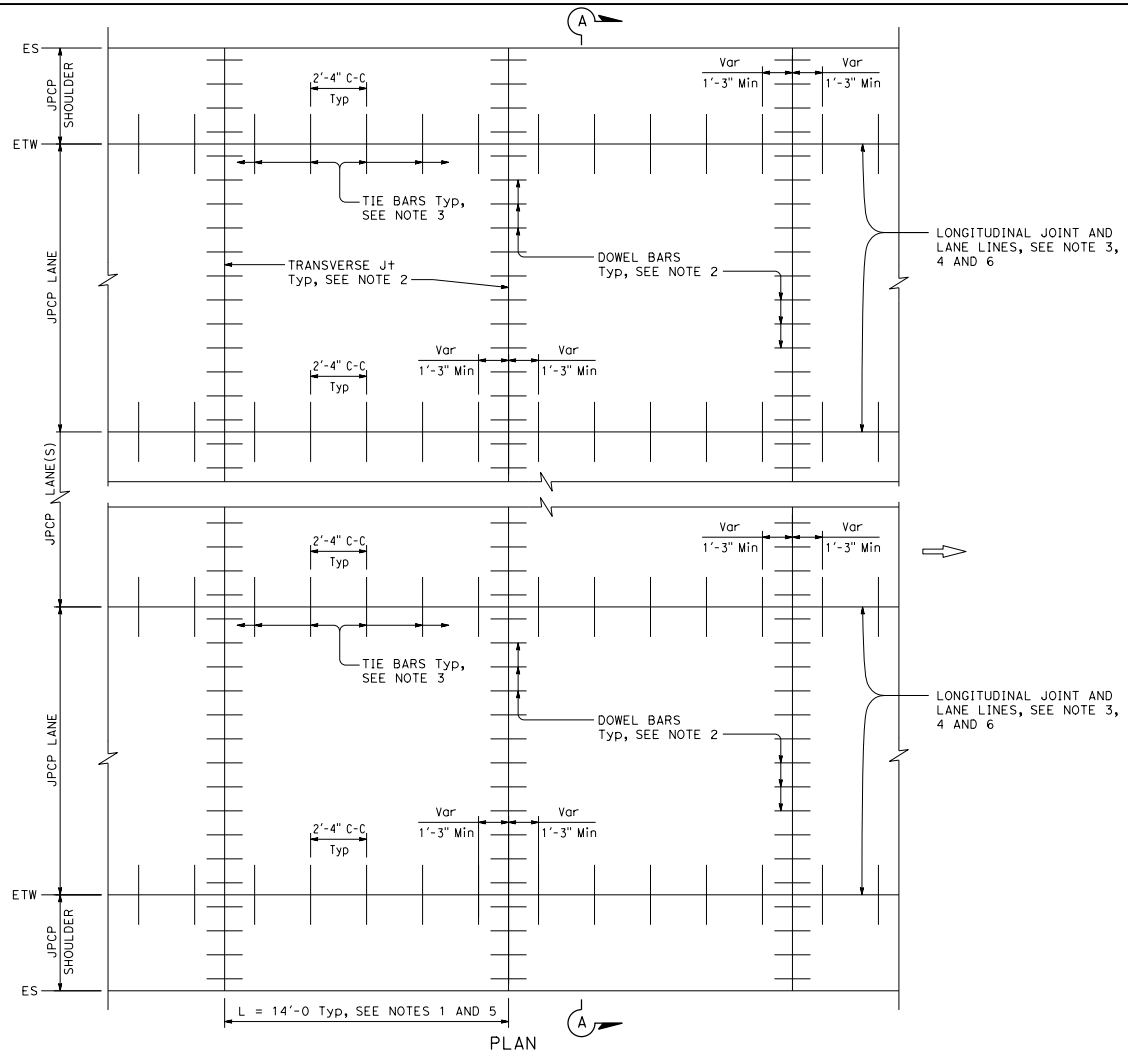

PLAN

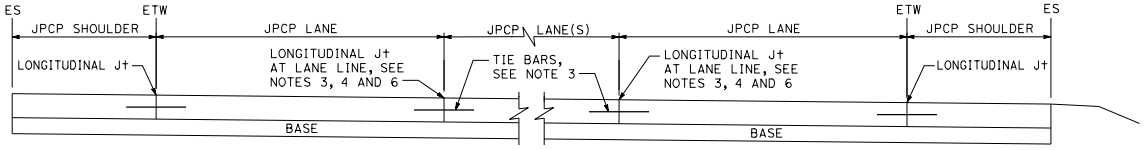

SECTION A-A

Dist	COUNTY	ROUTE	POST MILES TOTAL PROJECT	SHEET No.	TOTAL SHEETS

Dulce Rufino Feldman
REGISTERED CIVIL ENGINEER

September 18, 2026
PLANS APPROVAL DATE

REGISTERED PROFESSIONAL ENGINEER
Dulce Rufino Feldman
No. C81459
Exp. 9-30-27
CIVIL
STATE OF CALIFORNIA

THE STATE OF CALIFORNIA OR ITS OFFICERS OR AGENTS SHALL NOT BE RESPONSIBLE FOR THE ACCURACY OR COMPLETENESS OF SCANNED COPIES OF THIS PLAN SHEET.

NOTES:

1. Transverse joint spacing may be adjusted to no less than 10' and no more than 14' to conform to bridges, change in pavement type, and hardened concrete pavement.
2. For transverse joint and dowel bar details not shown, see Standard Plan P10.
3. For longitudinal joint and tie bar details not shown, see Standard Plan P15.
4. For additional longitudinal joint layout details, see Standard Plan P18.
5. For joint layout at intersections, see Project Plans.
6. For dowel bars at longitudinal joint, see Standard Plan P18.

STATE OF CALIFORNIA
DEPARTMENT OF TRANSPORTATION

JOINTED PLAIN CONCRETE PAVEMENT NEW CONSTRUCTION

NO SCALE

P1

2026 STANDARD PLAN P1

7-1-26

Return to Table of Contents

Dist	COUNTY	ROUTE	POST MILES TOTAL PROJECT	SHEET No.	TOTAL SHEETS

REGISTERED CIVIL ENGINEER

September 18, 2026
PLANS APPROVAL DATE

REGISTERED PROFESSIONAL ENGINEER Dulce Rufino Feldman No. C81459 Exp. 9-30-27 CIVIL STATE OF CALIFORNIA

THE STATE OF CALIFORNIA OR ITS OFFICERS OR AGENTS SHALL NOT BE RESPONSIBLE FOR THE ACCURACY OR COMPLETENESS OF SCANNED COPIES OF THIS PLAN SHEET.

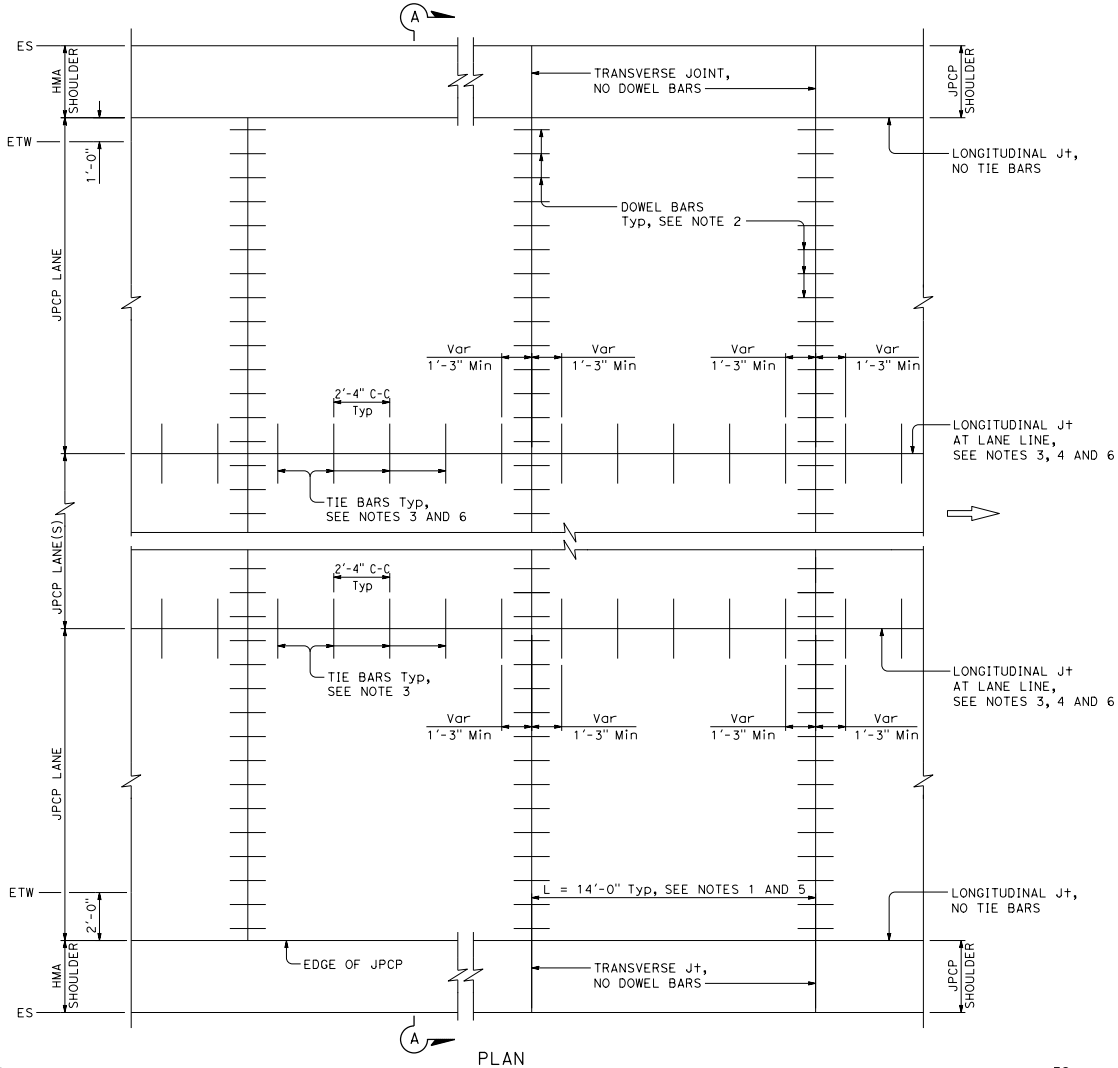

PLAN

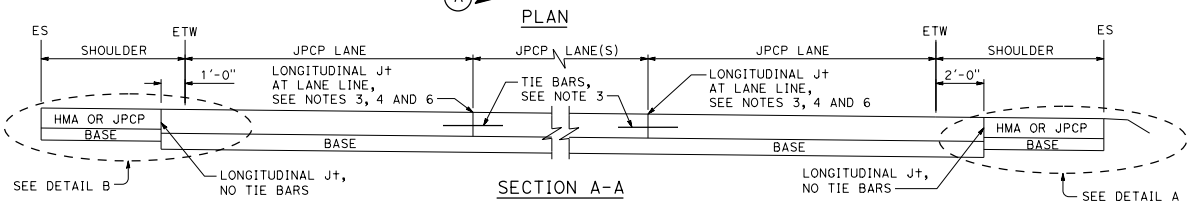

SECTION A-A

NOTES:

1. Transverse joint spacing may be adjusted to no less than 10' and no more than 14' to conform to bridges, change in pavement type, and hardened concrete pavement.
2. For transverse joint and dowel bar details not shown, see Standard Plan P10.
3. For longitudinal joint and tie bar details not shown, see Standard Plan P15.
4. For additional longitudinal joint layout details, see Standard Plan P18.
5. For joint layout at intersections, see Project Plans.
6. For dowel bars at longitudinal joint, see Standard Plan P18.
7. For limits of rumble strips, see Projects Plans.

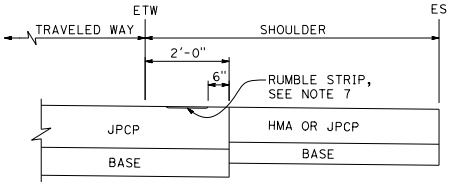

DETAIL A

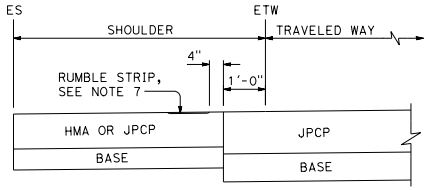

DETAIL B

STATE OF CALIFORNIA
DEPARTMENT OF TRANSPORTATION

JOINTED PLAIN CONCRETE PAVEMENT (WIDENED LANE) NEW CONSTRUCTION

NO SCALE

P2

2026 STANDARD PLAN P2

7-1-26

Return to Table of Contents

Dist	COUNTY	ROUTE	POST MILES TOTAL PROJECT	SHEET No.	TOTAL SHEETS

REGISTERED CIVIL ENGINEER

September 18, 2026
PLANS APPROVAL DATE

REGISTERED PROFESSIONAL ENGINEER
Dulce Rufino Feldman
No. C81459
Exp. 9-30-27
CIVIL
STATE OF CALIFORNIA

THE STATE OF CALIFORNIA OR ITS OFFICERS OR AGENTS SHALL NOT BE RESPONSIBLE FOR THE ACCURACY OR COMPLETENESS OF SCANNED COPIES OF THIS PLAN SHEET.

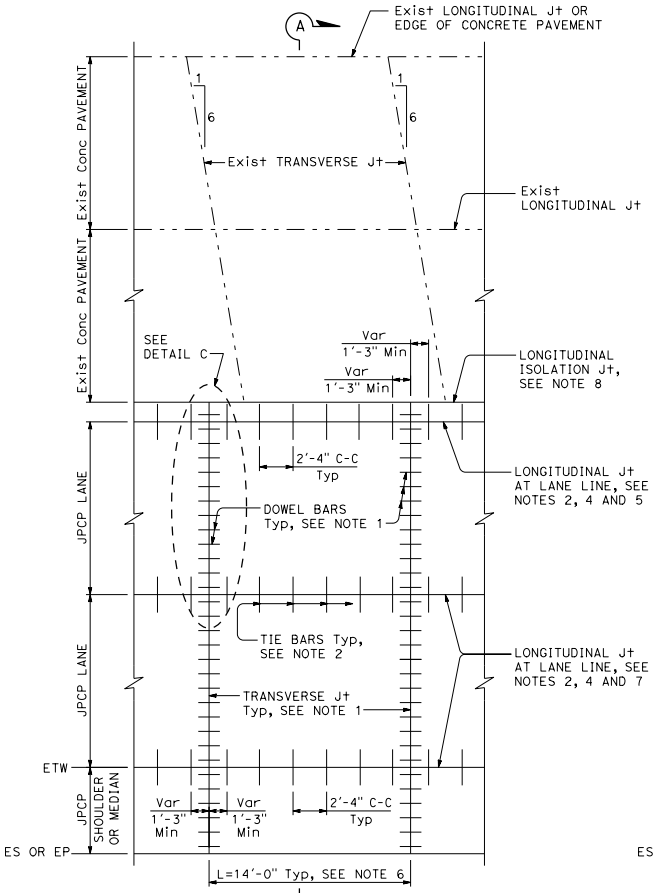

PLAN
ISOLATED
See Note 3

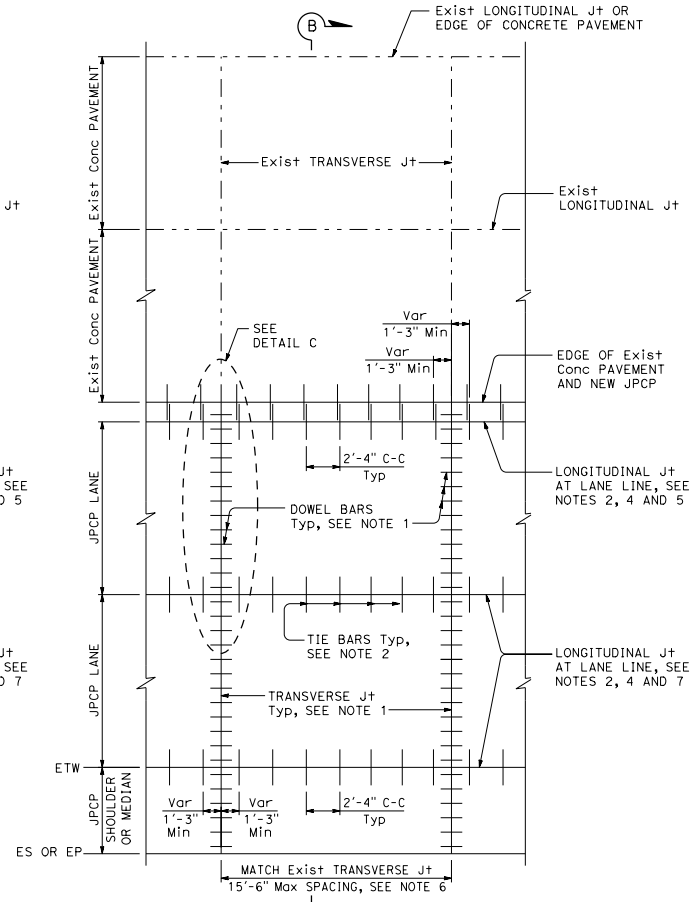

PLAN
TIED
See Note 3

NOTES:

1. For transverse joint and dowel bar details not shown, see Standard Plan P10.
2. For longitudinal joint and tie bar details not shown, see Standard Plan P15.
3. For joint layout at intersections, see Project Plans.
4. For additional longitudinal joint details, see Standard Plan P18.
5. Omit longitudinal joint when edge of new concrete pavement is 3'-3" or less from JPCP lane line.
6. Transverse joint spacing may be adjusted to no less than 10' and no more than 15'-6" to conform to bridges, change in pavement type and existing pavement.
7. For dowel bars at longitudinal joint, see Standard Plan P18.
8. For isolation joints, see Detail A on Standard Plan P18.

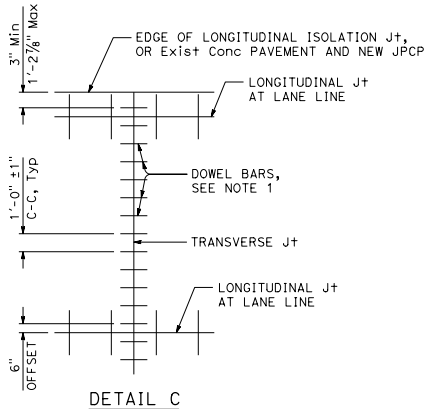

DETAIL C

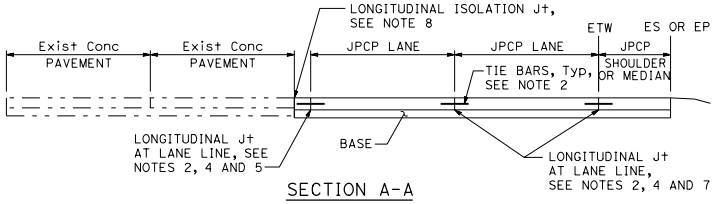

SECTION A-A

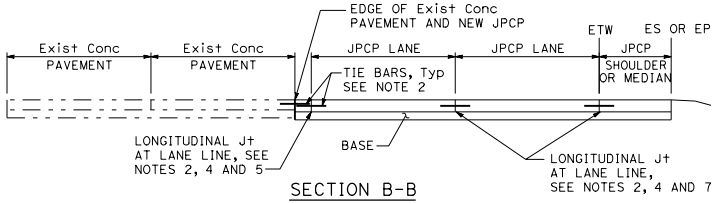

SECTION B-B

STATE OF CALIFORNIA
DEPARTMENT OF TRANSPORTATION

JOINTED PLAIN CONCRETE PAVEMENT LANE AND SHOULDER/MEDIAN ADDITION OR REPLACEMENT

NO SCALE

P3A

2026 STANDARD PLAN P3A

7-1-26

Return to Table of Contents

Dist	COUNTY	ROUTE	POST MILES TOTAL PROJECT	SHEET No.	TOTAL SHEETS

REGISTERED CIVIL ENGINEER

September 18, 2026
PLANS APPROVAL DATE

REGISTERED PROFESSIONAL ENGINEER Dulce Rufino Feldman No. C81459 Exp. 9-30-27 CIVIL STATE OF CALIFORNIA

THE STATE OF CALIFORNIA OR ITS OFFICERS OR AGENTS SHALL NOT BE RESPONSIBLE FOR THE ACCURACY OR COMPLETENESS OF SCANNED COPIES OF THIS PLAN SHEET.

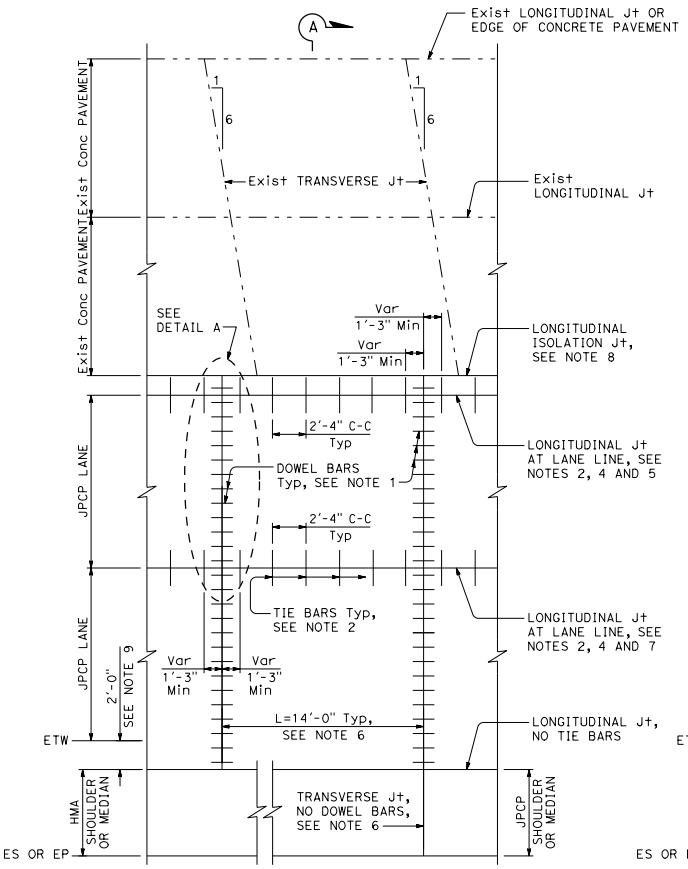

PLAN
ISOLATED
See Note 3

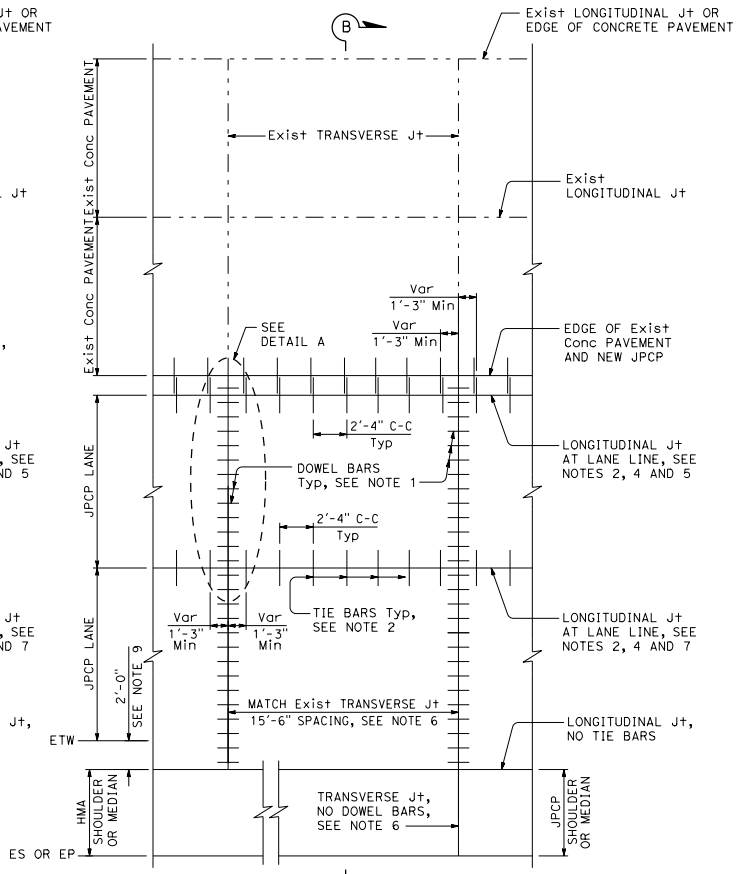

PLAN
TIED
See Note 3

NOTES:

1. For transverse joint and dowel bar details not shown, see Standard Plan P10.
2. For longitudinal joint and tie bar details not shown, see Standard Plan P15.
3. For joint layout at intersections, see Project Plans.
4. For additional longitudinal joint details, see Standard Plan P18.
5. Omit longitudinal joint when edge of new concrete pavement is 3'-3" or less from JPCP lane line.
6. Transverse joint spacing may be adjusted to no less than 10' and no more than 15'-6" to conform to bridges, change in pavement type and existing pavement.
7. For dowel bars at longitudinal joint, see Standard Plan P18.
8. For isolation joints, see Detail A on Standard Plan P18.
9. For median, this distance is 1'-0".

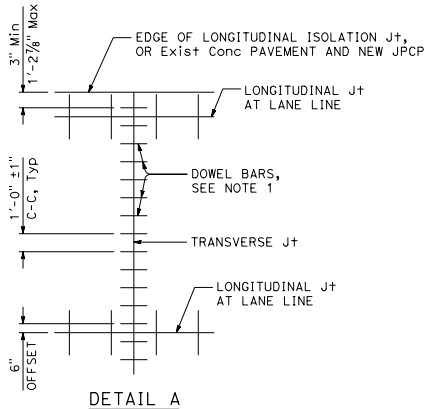

DETAIL A

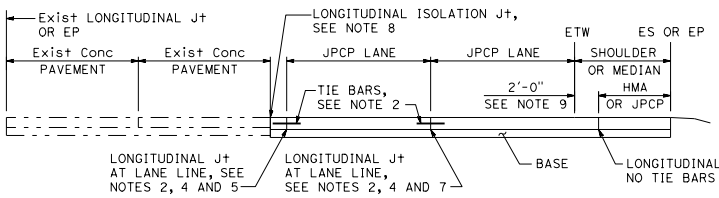

SECTION A-A

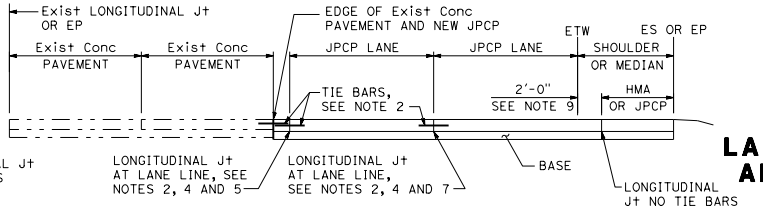

SECTION B-B

STATE OF CALIFORNIA
DEPARTMENT OF TRANSPORTATION

JOINTED PLAIN CONCRETE PAVEMENT (WIDENED LANE) LANE AND SHOULDER/MEDIAN ADDITION OR REPLACEMENT

NO SCALE

P3B

7-1-26

Return to Table of Contents

Dist	COUNTY	ROUTE	POST MILES TOTAL PROJECT	SHEET No.	TOTAL SHEETS

Dulce Rufino Feldman
REGISTERED CIVIL ENGINEER

September 18, 2026
PLANS APPROVAL DATE

REGISTERED PROFESSIONAL ENGINEER
Dulce Rufino Feldman
No. C81459
Exp. 9-30-27
CIVIL
STATE OF CALIFORNIA

THE STATE OF CALIFORNIA OR ITS OFFICERS OR AGENTS SHALL NOT BE RESPONSIBLE FOR THE ACCURACY OR COMPLETENESS OF SCANNED COPIES OF THIS PLAN SHEET.

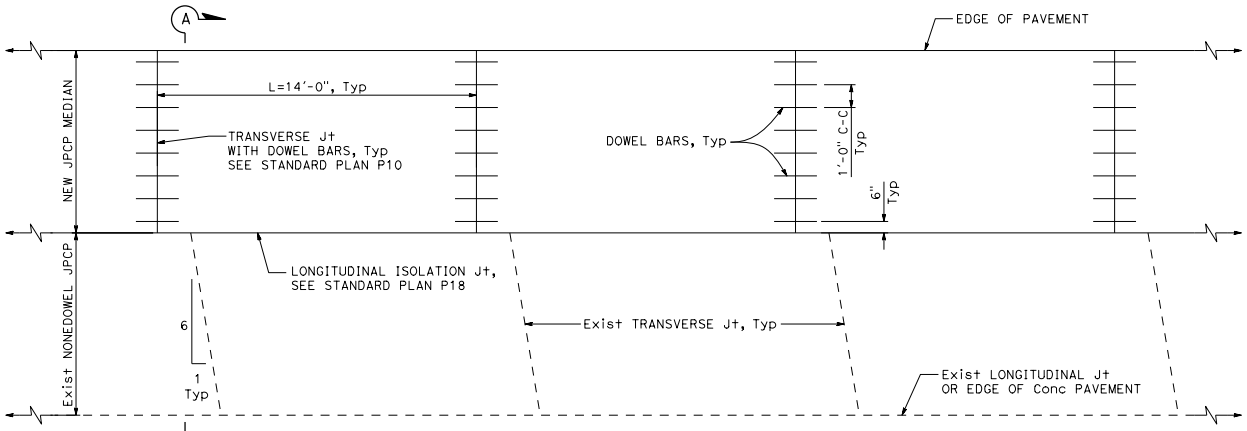

MEDIAN ADDITION TO LANE WITH SKEW JOINTS

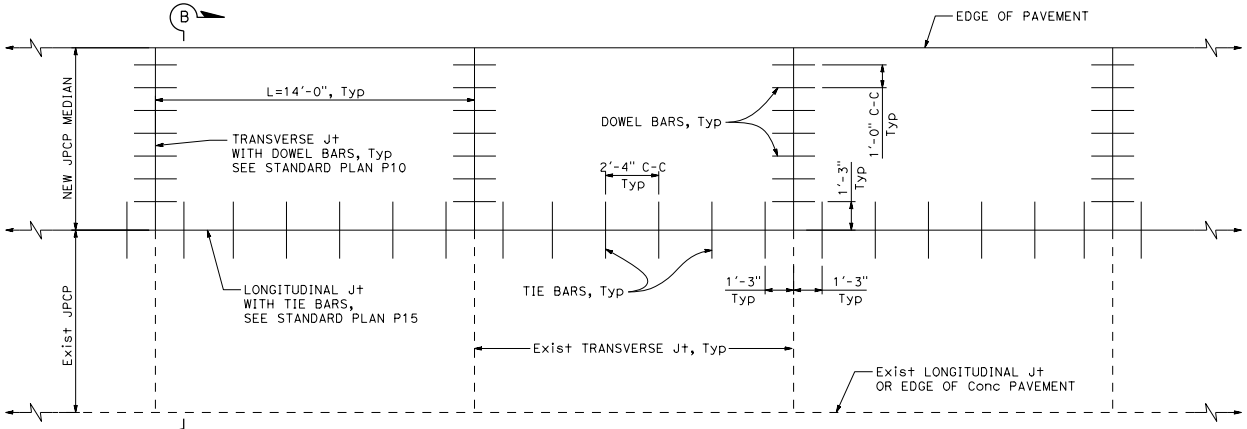

MEDIAN ADDITION TO LANE WITH STRAIGHT JOINTS

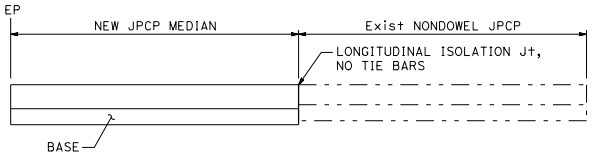

SECTION A-A

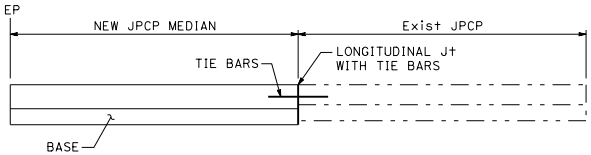

SECTION B-B

STATE OF CALIFORNIA
DEPARTMENT OF TRANSPORTATION

JOINTED PLAIN CONCRETE PAVEMENT MEDIAN ADDITION/RECONSTRUCTION

NO SCALE

P3C

2026 STANDARD PLAN P3C

7-1-26

Return to Table of Contents

Dist	COUNTY	ROUTE	POST MILES TOTAL PROJECT	SHEET No.	TOTAL SHEETS

REGISTERED CIVIL ENGINEER

September 18, 2026
PLANS APPROVAL DATE

REGISTERED PROFESSIONAL ENGINEER Dulce Rufino Feldman No. C81459 Exp. 9-30-27 CIVIL STATE OF CALIFORNIA

THE STATE OF CALIFORNIA OR ITS OFFICERS OR AGENTS SHALL NOT BE RESPONSIBLE FOR THE ACCURACY OR COMPLETENESS OF SCANNED COPIES OF THIS PLAN SHEET.

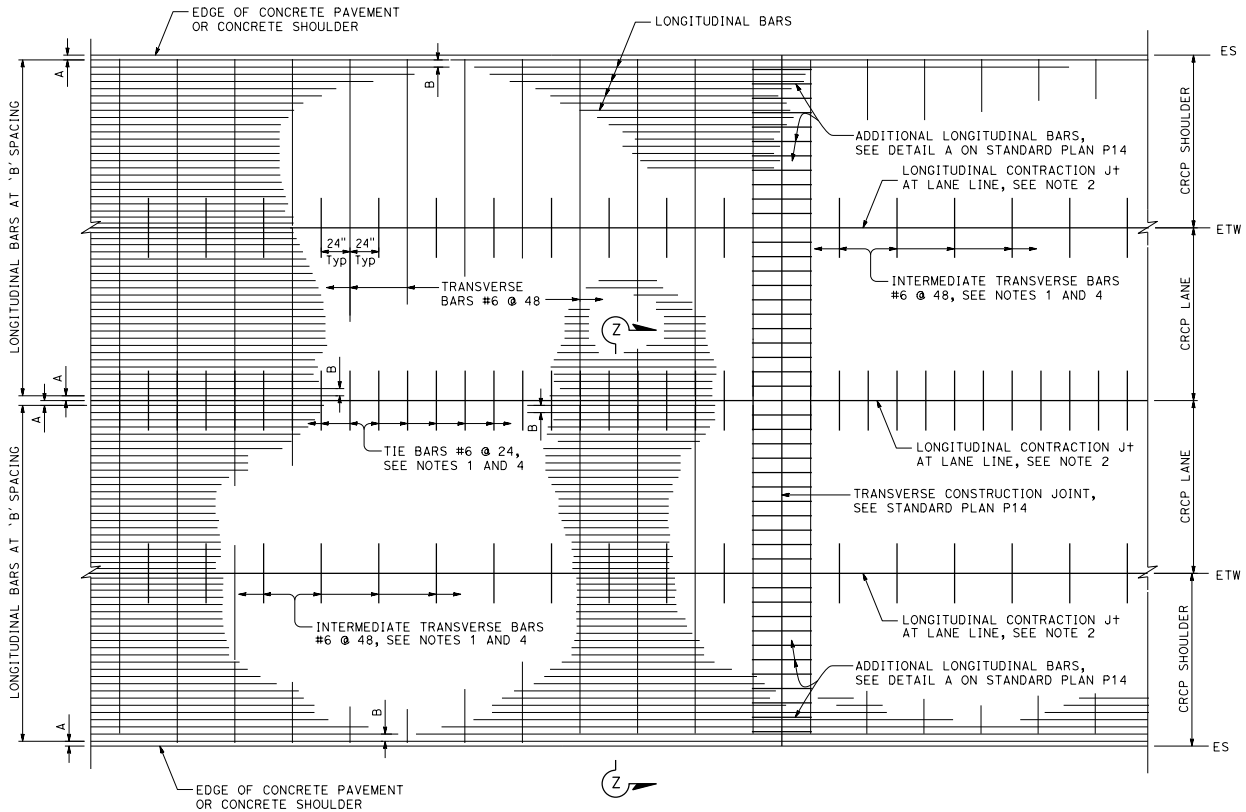

PLAN
See Note 3

NOTES:

1. Place tie bars and intermediate transverse bars parallel to and in the same plane as transverse bars.
2. For longitudinal contraction and construction joint details, see Standard Plan P16.
3. For curved lane layout, see Standard Plan P16.
4. For tie bar and intermediate transverse bar details, see Standard Plan P16.

ABBREVIATION:

D - Thickness of CRCP

TABLE No. 1 LONGITUDINAL BAR REINFORCEMENT

SLAB THICKNESS AND BAR SIZE		FIRST SPACING AT EDGE OR JOINT	REGULAR BARS	ADDITIONAL BARS AT TRANSVERSE CONSTRUCTION JOINT	Clr
D	BAR SIZE	SPACING A	SPACING B	SPACING 2 × B	X
0.75′	#6	3" TO 4"	7"	14"	4"
0.80′	#6	3" TO 4"	6½"	13"	4"
0.85′	#6	3" TO 4"	6"	12"	4"
0.90′	#6	3" TO 4"	5½"	11"	4"
0.95′	#6	3" TO 4"	5¼"	10½"	4"
1.00′	#6	3" TO 4"	5"	10"	5"
1.05′	#7	3" TO 4"	6½"	13"	5"
1.10′	#7	3" TO 4"	6¼"	12½"	5½"

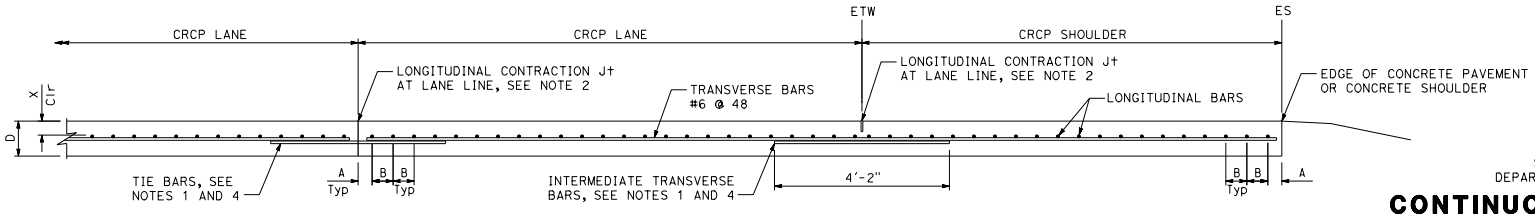

SECTION Z-Z

STATE OF CALIFORNIA
DEPARTMENT OF TRANSPORTATION

CONTINUOUSLY REINFORCED CONCRETE PAVEMENT

NO SCALE

P4

2026 STANDARD PLAN P4

7-1-26

Return to Table of Contents

Dist	COUNTY	ROUTE	POST MILES TOTAL PROJECT	SHEET No.	TOTAL SHEETS

REGISTERED CIVIL ENGINEER

September 18, 2026

PLANS APPROVAL DATE

REGISTERED PROFESSIONAL ENGINEER Dulce Rufino Feldman No. C81459 Exp. 9-30-27 CIVIL STATE OF CALIFORNIA

THE STATE OF CALIFORNIA OR ITS OFFICERS OR AGENTS SHALL NOT BE RESPONSIBLE FOR THE ACCURACY OR COMPLETENESS OF SCANNED COPIES OF THIS PLAN SHEET.

ABBREVIATION:

D = Thickness of CRCP

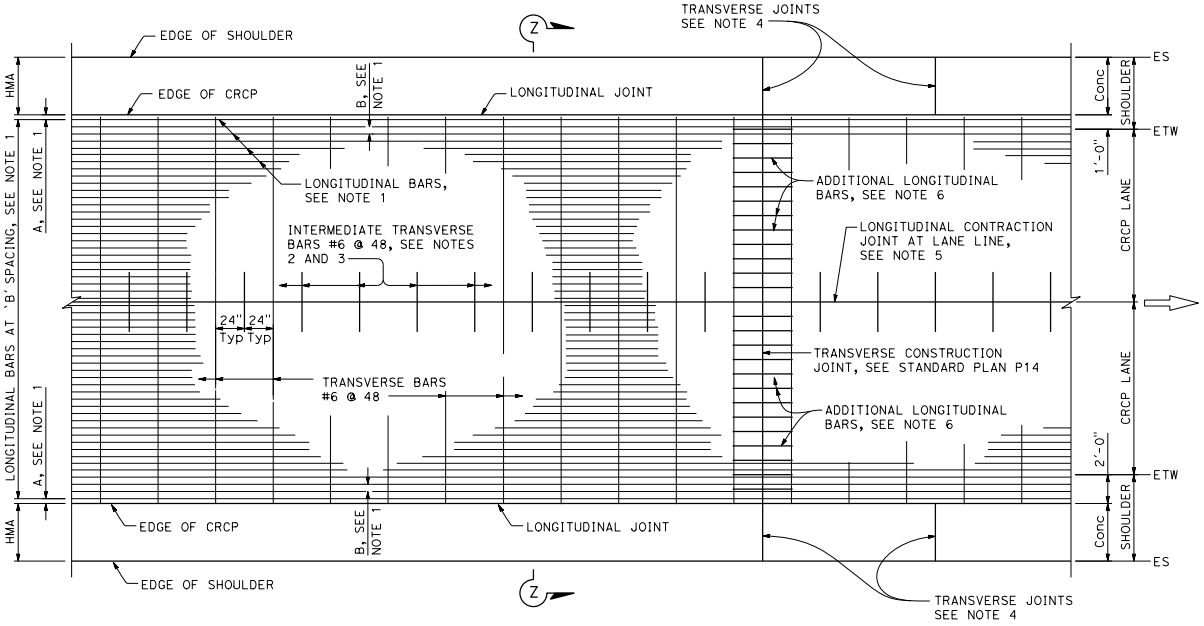

PLAN

See Note 7

NOTES:

1. For longitudinal bar size, spacing and clearances, see Standard Plan P4.
2. For tie bar and intermediate transverse bar details, see Standard Plan P16.
3. Place Intermediate transverse bars parallel to and in the same plane as transverse bars.
4. Construct transverse joints at right angle to the longitudinal joints in adjacent CRCP. Space joints at no less than 10'-0" intervals and no more than 14'-0" intervals. Match location of JPCP transverse joint with CRCP transverse construction joint or expansion joint. Omit dowel bars.
5. For longitudinal contraction joint details, see Standard Plan P16.
6. For additional longitudinal bars detail, see Detail A on Standard Plan P14.
7. For longitudinal construction joint plan layout not shown, see Standard Plan P4. For tie bar details at longitudinal construction joint, see Standard Plan P16.
8. For limits of rumble strips, see Project Plans.

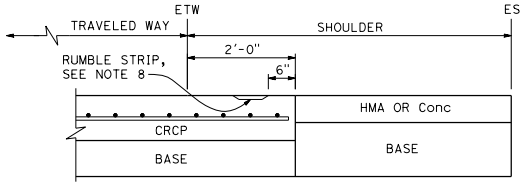

DETAIL A

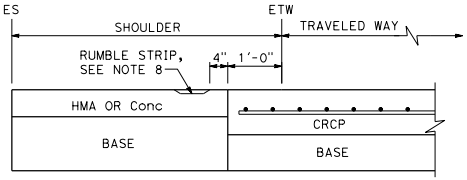

DETAIL B

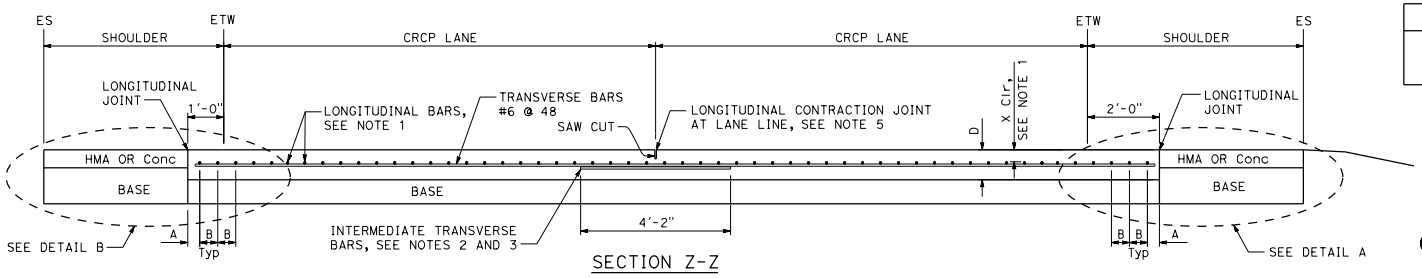

SECTION Z-Z

STATE OF CALIFORNIA
DEPARTMENT OF TRANSPORTATION

CONTINUOUSLY REINFORCED CONCRETE PAVEMENT (WIDENED LANE)

NO SCALE

P5A

2026 STANDARD PLAN P5A

7-1-26

Return to Table of Contents

Dist	COUNTY	ROUTE	POST MILES TOTAL PROJECT	SHEET No.	TOTAL SHEETS

REGISTERED CIVIL ENGINEER

September 18, 2026

PLANS APPROVAL DATE

REGISTERED PROFESSIONAL ENGINEER Dulce Rufino Feldman No. C81459 Exp. 9-30-27 CIVIL STATE OF CALIFORNIA

THE STATE OF CALIFORNIA OR ITS OFFICERS OR AGENTS SHALL NOT BE RESPONSIBLE FOR THE ACCURACY OR COMPLETENESS OF SCANNED COPIES OF THIS PLAN SHEET.

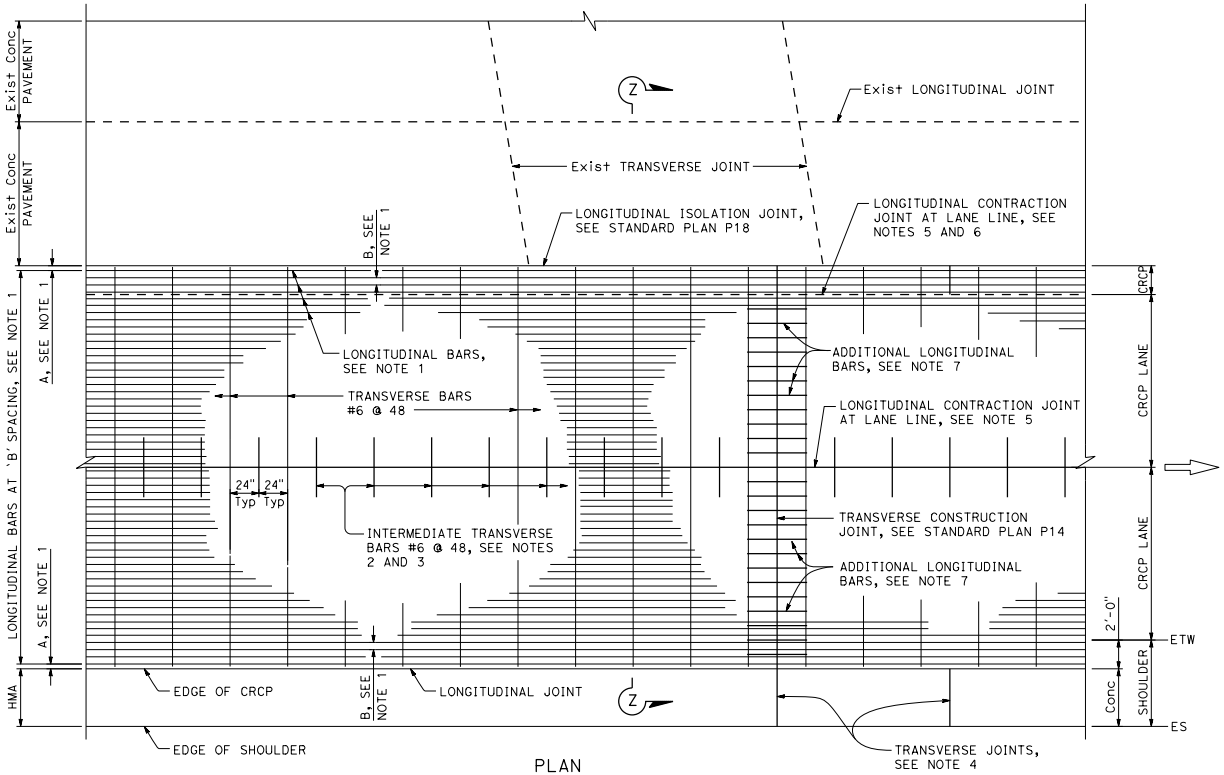

PLAN

See Note 8

ABBREVIATION:

D - Thickness of CRCP

NOTES:

1. For longitudinal bar size, spacing and clearances, see Standard Plan P4.
2. For tie bar and intermediate transverse bar details, see Standard Plan P16.
3. Place Intermediate transverse bars parallel to and in the same plane as transverse bars.
4. Construct transverse joints at right angle to the longitudinal joints in adjacent CRCP. Space joints at no less than 10' intervals and no more than 14' intervals. Match location of JPCP transverse joint with CRCP transverse construction joint, expansion joint or wide flange beam. Omit dowel bars.
5. For longitudinal contraction joint details, see Standard Plan P16.
6. Do not construct longitudinal contraction joint when edge of new CRCP is less than 3'-3" from lane line.
7. For additional longitudinal bars detail, see Detail A on Standard Plan P14.
8. For longitudinal construction joint plan layout not shown, see Standard Plan P4. For tie bar details at longitudinal construction joint, see Standard Plan P16.
9. For limits of rumble strips, see Project Plans.

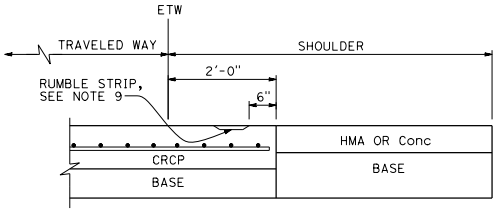

DETAIL A

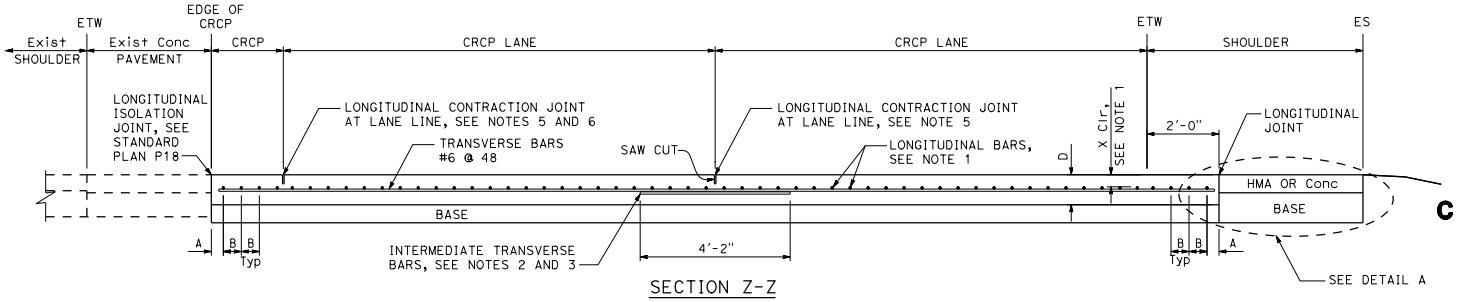

SECTION Z-Z

STATE OF CALIFORNIA
DEPARTMENT OF TRANSPORTATION

CONTINUOUSLY REINFORCED CONCRETE PAVEMENT (WIDENED LANE) LANE AND SHOULDER ADDITION OR REPLACEMENT

NO SCALE

P5B

2026 STANDARD PLAN P5B

7-1-26

Return to Table of Contents

Dist	COUNTY	ROUTE	POST MILES TOTAL PROJECT	SHEET No.	TOTAL SHEETS

REGISTERED CIVIL ENGINEER

September 18, 2026

PLANS APPROVAL DATE

REGISTERED PROFESSIONAL ENGINEER Andre Totari No. C94691 Exp. 6-30-27 CIVIL STATE OF CALIFORNIA

THE STATE OF CALIFORNIA OR ITS OFFICERS OR AGENTS SHALL NOT BE RESPONSIBLE FOR THE ACCURACY OR COMPLETENESS OF SCANNED COPIES OF THIS PLAN SHEET.

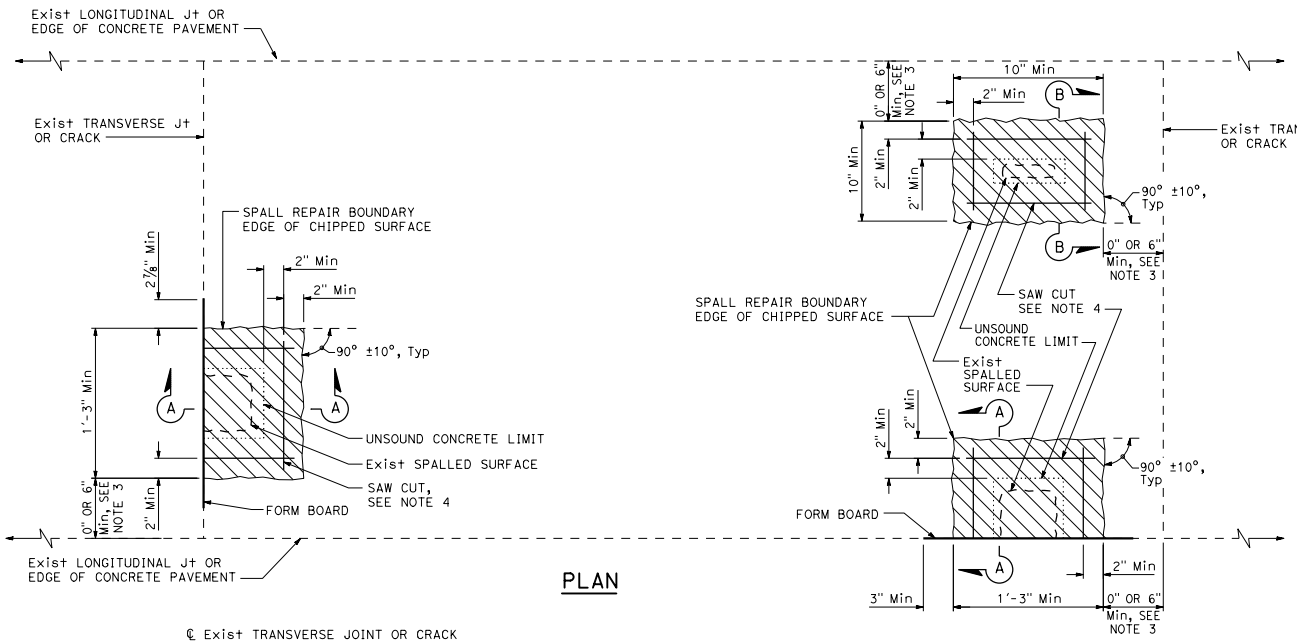

PLAN

NOTES:

1. See Project Plans for spall repair locations.
2. Combine spall repair areas closer than 2' apart.
3. If the spall repair area is less than 6" from a joint, extend the repair to the joint.
4. Cut at least 2" beyond the rectangular limits of unsound concrete determined by the Engineer. Determine the saw cut depth using the following table:

CONCRETE MATERIAL	SAW CUT DEPTH	
	Min	Max
FAST-SETTING	2"	3½"
POLYESTER	1½"	3½"

LEGEND:

SPALL REPAIR

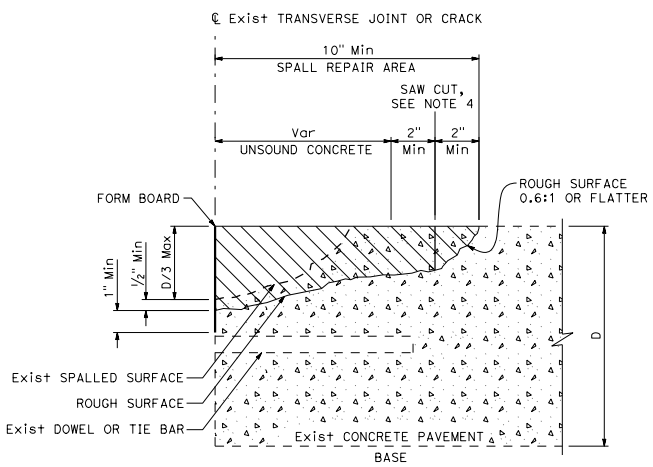

SECTION A-A

JOINT, CRACK, OR EDGE OF CONCRETE PAVEMENT REPAIR

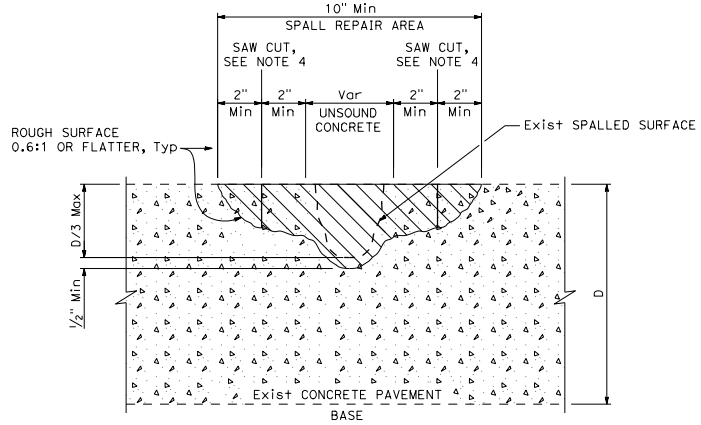

SECTION B-B

MISCELLANEOUS SPALL REPAIR

STATE OF CALIFORNIA
DEPARTMENT OF TRANSPORTATION

SPALL REPAIR

NO SCALE

P6

2026 STANDARD PLAN P6

7-1-26

Return to Table of Contents

Dist	COUNTY	ROUTE	POST MILES TOTAL PROJECT	SHEET No.	TOTAL SHEETS

REGISTERED CIVIL ENGINEER

September 18, 2026
PLANS APPROVAL DATE

REGISTERED PROFESSIONAL ENGINEER
Andre Totari
No. C94691
Exp. 6-30-27
CIVIL
STATE OF CALIFORNIA

THE STATE OF CALIFORNIA OR ITS OFFICERS OR AGENTS SHALL NOT BE RESPONSIBLE FOR THE ACCURACY OR COMPLETENESS OF SCANNED COPIES OF THIS PLAN SHEET.

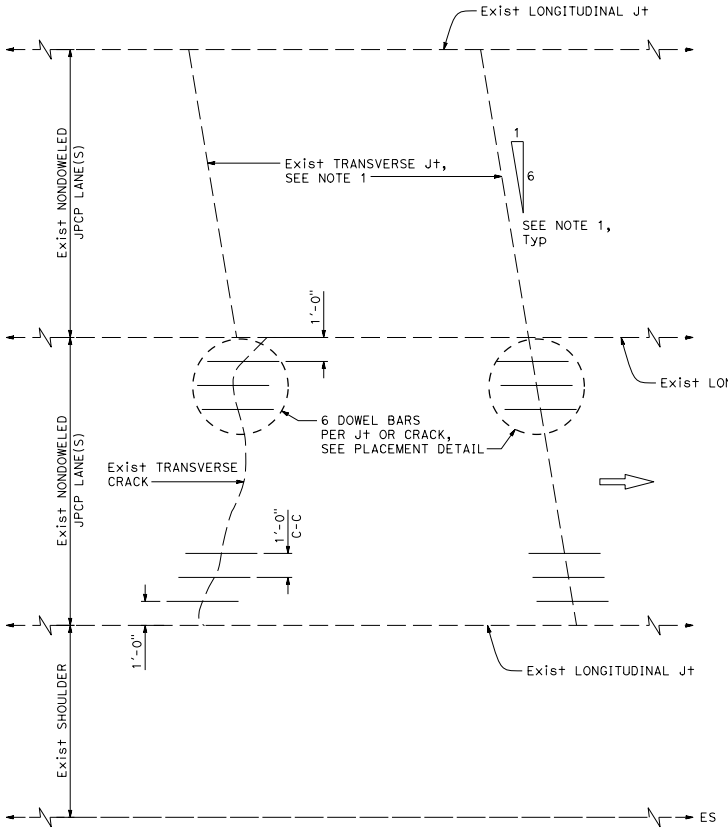

PLAN

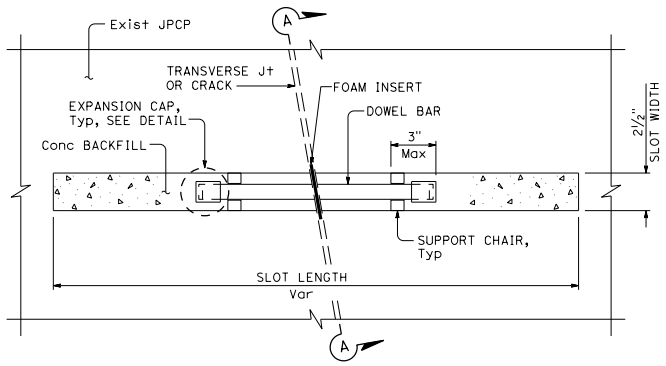

PLAN

NOTES:

1. Details for skewed joints also apply to perpendicular joints.
2. Use 1'-6" ±¼" long dowel bars with a 1¼" diameter except 1" diameter dowel bars may be used if D < 0.70'.
3. Caulk existing transverse joint at bottom and sides of the dowel bar slot prior to placing dowel bar and foam insert.
4. Foam insert thickness must match width of existing transverse joint or crack.

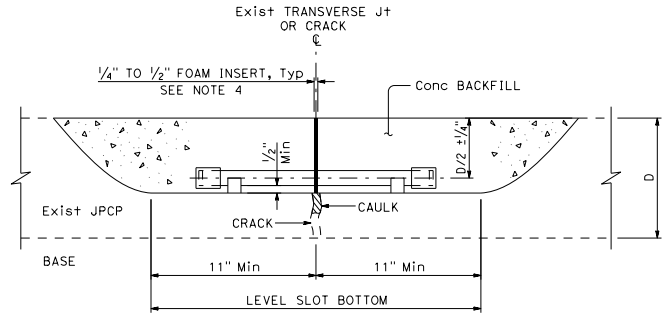

ELEVATION

DOWEL BAR PLACEMENT DETAIL

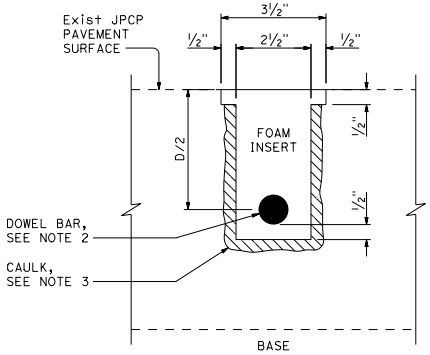

SECTION A-A

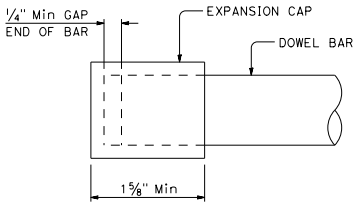

EXPANSION CAP DETAIL

STATE OF CALIFORNIA
DEPARTMENT OF TRANSPORTATION

DOWEL BAR RETROFIT

NO SCALE

2026 STANDARD PLAN P7

P7

7-1-26

Return to Table of Contents

Dist	COUNTY	ROUTE	POST MILES TOTAL PROJECT	SHEET No.	TOTAL SHEETS

REGISTERED CIVIL ENGINEER

September 18, 2026
PLANS APPROVAL DATE

REGISTERED PROFESSIONAL ENGINEER
Andre Totari
No. C94691
Exp. 6-30-27
CIVIL
STATE OF CALIFORNIA

THE STATE OF CALIFORNIA OR ITS OFFICERS OR AGENTS SHALL NOT BE RESPONSIBLE FOR THE ACCURACY OR COMPLETENESS OF SCANNED COPIES OF THIS PLAN SHEET.

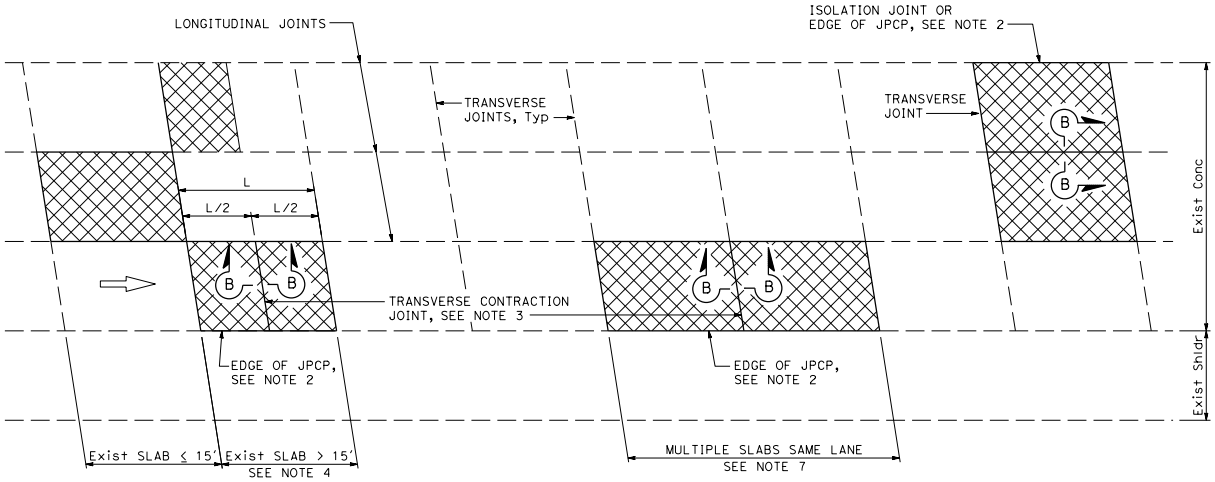

PLAN

NOTES:

1. For details not shown, see Standard Plans P8B, P10, and P12.
2. Use side forms where edge of RSC pavement is adjacent to asphalt concrete.
3. Transverse joints to match skew of existing joint unless otherwise specified.
4. Where the transverse joint spacing exceeds 15'-0", construct an additional transverse contraction joint midway between the joints.
5. Do not place tie bars at longitudinal joints.
6. For skewed dowel bar basket details, refer to Standard Plan P8B.
7. Date stamp on the first and last panel if there are multiple panels in a row.

LEGEND:

RSC — RAPID STRENGTH CONCRETE

INDIVIDUAL SLAB REPLACEMENT WITH RSC

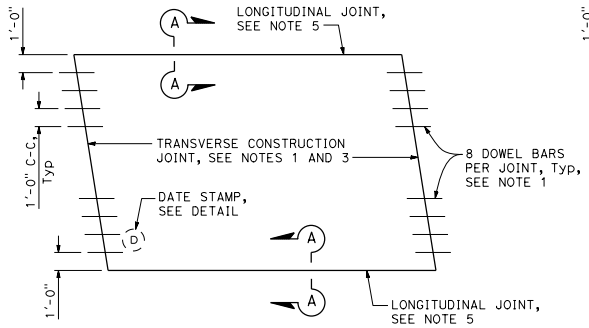

SINGLE SLAB REPLACEMENT

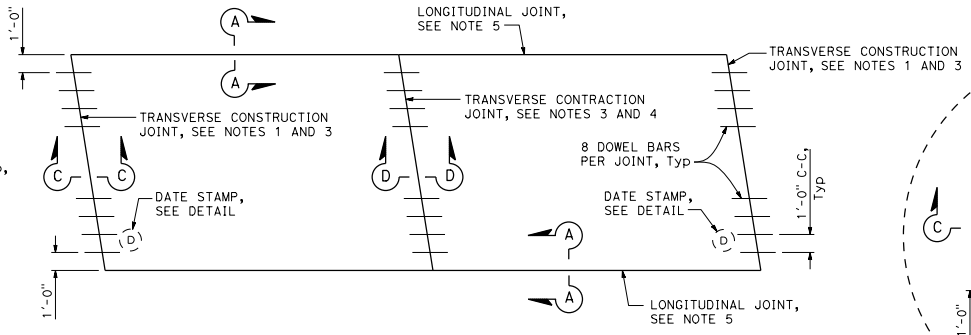

MULTIPLE SLAB REPLACEMENT

SLAB LAYOUT

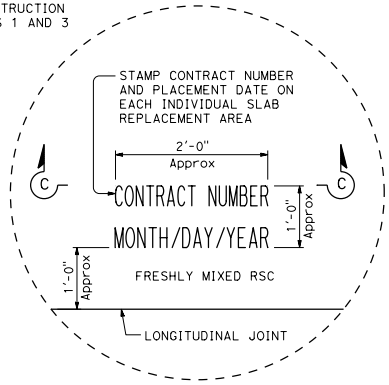

DATE STAMP DETAIL

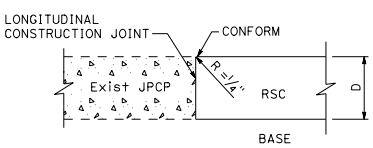

SECTION A-A

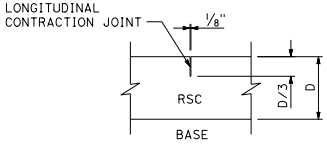

SECTION B-B
See Note 5

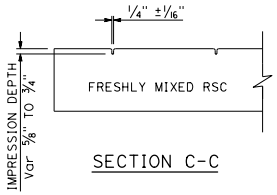

SECTION C-C

STATE OF CALIFORNIA
DEPARTMENT OF TRANSPORTATION

INDIVIDUAL SLAB REPLACEMENT WITH RAPID STRENGTH CONCRETE

NO SCALE

P8A

2026 STANDARD PLAN P8A

7-1-26

Return to Table of Contents

Dist	COUNTY	ROUTE	POST MILES TOTAL PROJECT	SHEET No.	TOTAL SHEETS

REGISTERED CIVIL ENGINEER

September 18, 2026

PLANS APPROVAL DATE

REGISTERED PROFESSIONAL ENGINEER Andre Totari No. C94691 Exp. 6-30-27 CIVIL STATE OF CALIFORNIA

THE STATE OF CALIFORNIA OR ITS OFFICERS OR AGENTS SHALL NOT BE RESPONSIBLE FOR THE ACCURACY OR COMPLETENESS OF SCANNED COPIES OF THIS PLAN SHEET.

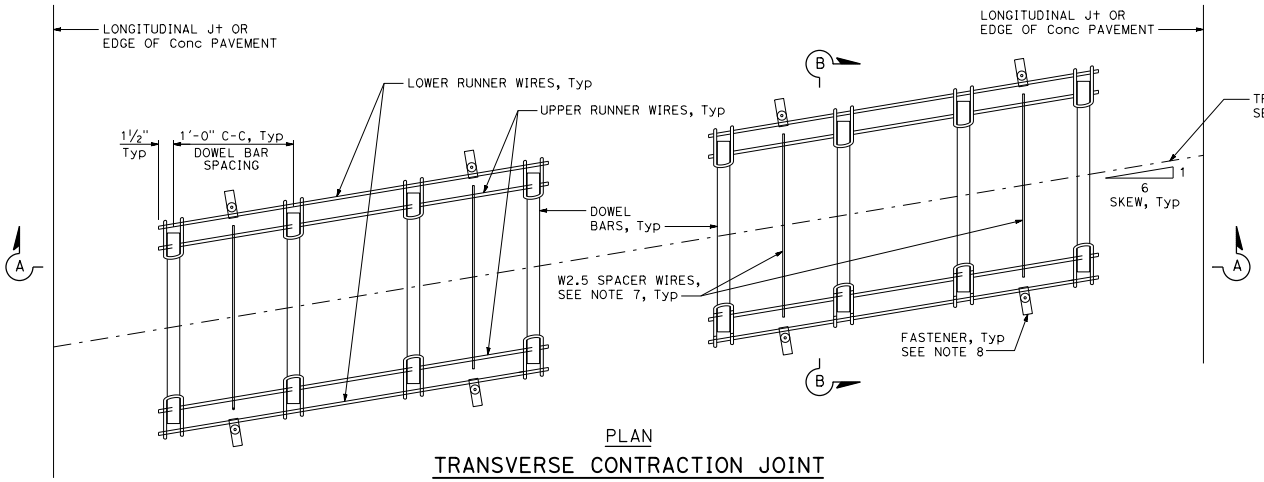

PLAN

TRANSVERSE CONTRACTION JOINT DOWEL BAR BASKET

See Note 3

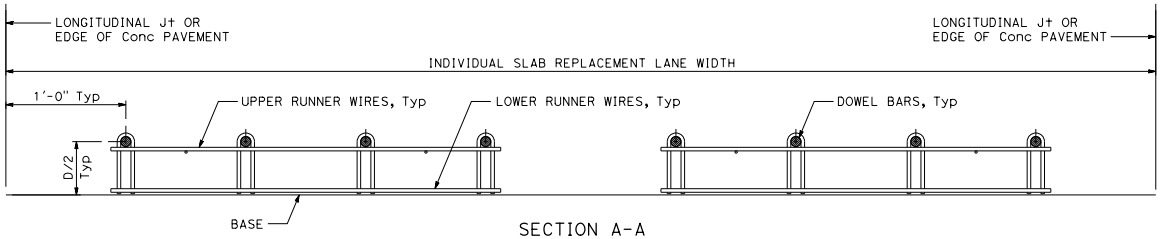

SECTION A-A

See Note 3

NOTES:

1. For details not shown, see Standard Plan P10.
2. Install dowel bars at transverse joints parallel to an adjacent longitudinal joint. Match the skewed offset and location of adjacent existing transverse joints.
3. "U" frame shape assembly shown. Use either "U" frame or "A" frame shape.
4. Wire sizes shown are the minimum required.
5. Resistance weld wire intersections.
6. Arc or resistance weld alternating ends of dowel bars at the top or bottom of the bar.
7. Weld spacer wires to upper runner wire.
8. Use fasteners for treated or bound base surfaces. Use anchor pins on soil or unbound granular base material.

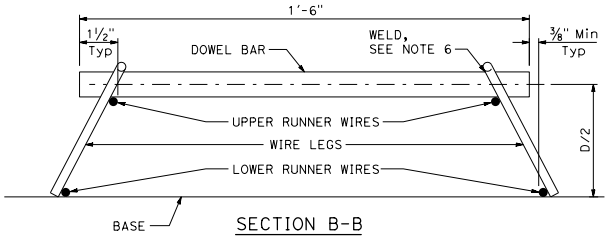

SECTION B-B

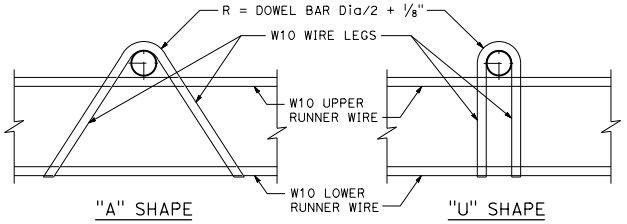

ASSEMBLY FRAME DETAILS

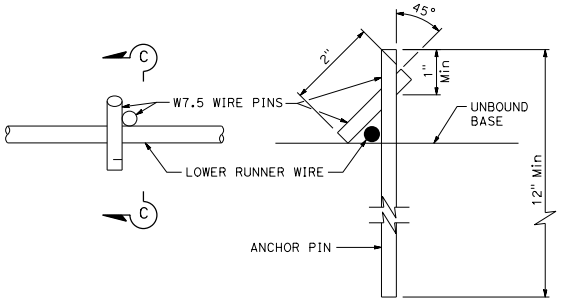

PLAN SECTION C-C

ANCHOR PIN DETAIL

See Note 8

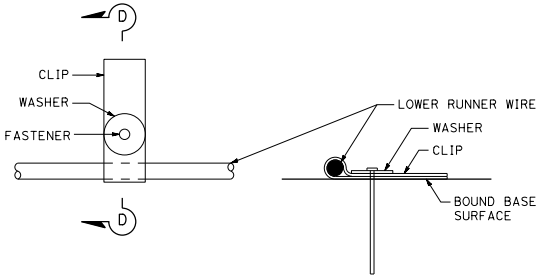

PLAN SECTION D-D

FASTENER DETAIL

See Note 8

STATE OF CALIFORNIA
DEPARTMENT OF TRANSPORTATION

INDIVIDUAL SLAB REPLACEMENT DOWEL BAR BASKET DETAILS

NO SCALE

P8B

2026 STANDARD PLAN P8B

7-1-26

Return to Table of Contents

Dist	COUNTY	ROUTE	POST MILES TOTAL PROJECT	SHEET No.	TOTAL SHEETS

REGISTERED CIVIL ENGINEER

September 18, 2026

PLANS APPROVAL DATE

REGISTERED PROFESSIONAL ENGINEER Dulce Rufino Feldman No. C81459 Exp. 9-30-27 CIVIL STATE OF CALIFORNIA

THE STATE OF CALIFORNIA OR ITS OFFICERS OR AGENTS SHALL NOT BE RESPONSIBLE FOR THE ACCURACY OR COMPLETENESS OF SCANNED COPIES OF THIS PLAN SHEET.

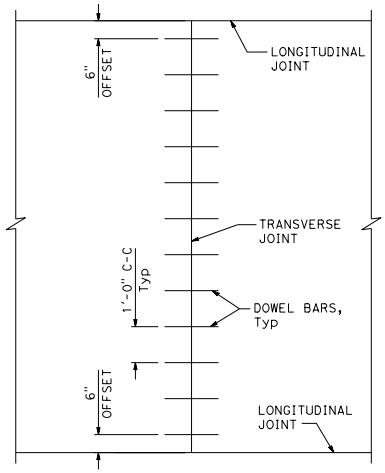

TRANSVERSE JOINT DOWEL BAR LAYOUT

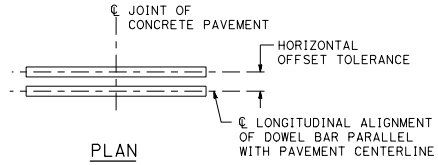

PLAN

HORIZONTAL OFFSET TOLERANCE

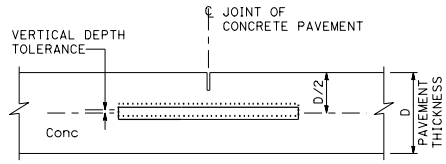

ELEVATION

VERTICAL DEPTH TOLERANCE

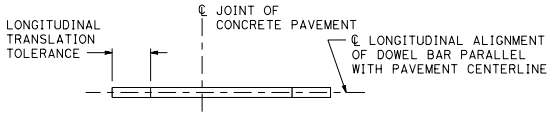

PLAN

LONGITUDINAL TRANSLATION TOLERANCE

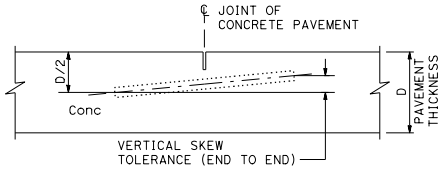

ELEVATION

VERTICAL SKEW TOLERANCE

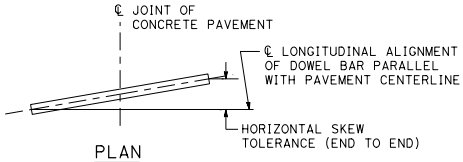

PLAN

HORIZONTAL SKEW TOLERANCE

NOTES:

1. See Standard Plan P1 for typical dowel bar placement and locations.
2. Where fresh concrete pavement is placed against new concrete or existing concrete pavement, rounding the corner of the existing concrete pavement is not required.
3. May also use ¾" Dia dowel bars 2'-4" ±¼" in length. Center the length of dowel bars at the centerline of longitudinal joint.

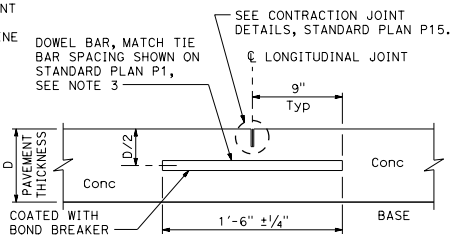

LONGITUDINAL CONTRACTION JOINT WITH DOWEL BARS

See Standard Plan P18

TABLE 1

DOWEL BAR DIAMETER TABLE			
PAVEMENT THICKNESS	0.65'	> 0.65' - 0.85'	> 0.85'
MINIMUM DOWEL * BAR DIAMETER	1"	1¼"	1½"

* The drilled hole diameter must be ⅛" to 3/16" larger than the bar diameter.

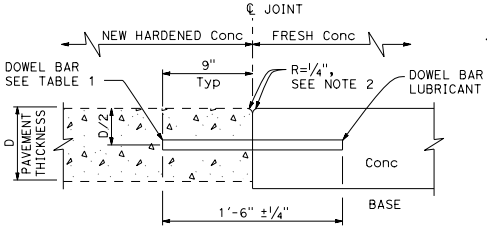

TRANSVERSE CONSTRUCTION JOINT DETAIL

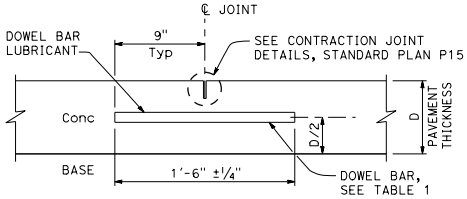

TRANSVERSE CONTRACTION JOINT

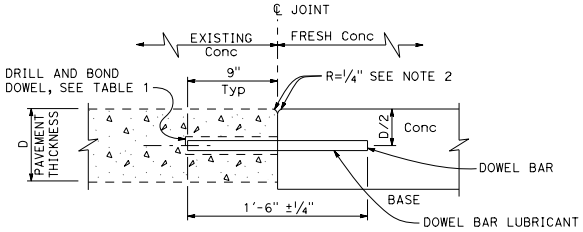

TRANSVERSE CONSTRUCTION JOINT FOR EXISTING CONCRETE PAVEMENT

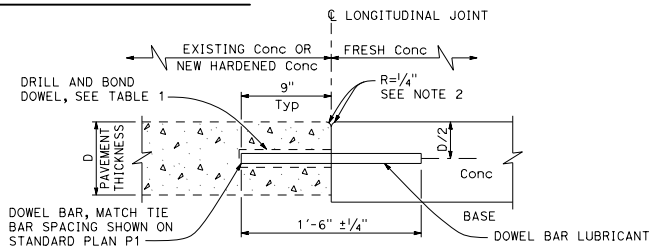

LONGITUDINAL CONSTRUCTION JOINT WITH DOWEL BARS

See Standard Plan P18

STATE OF CALIFORNIA
DEPARTMENT OF TRANSPORTATION

CONCRETE PAVEMENT DOWEL BAR DETAILS

NO SCALE

P10

2026 STANDARD PLAN P10

7-1-26

Return to Table of Contents

Dist	COUNTY	ROUTE	POST MILES TOTAL PROJECT	SHEET No.	TOTAL SHEETS

REGISTERED CIVIL ENGINEER

September 18, 2026

PLANS APPROVAL DATE

Dulce Rufino Feldman No. C81459 Exp. 9-30-27 CIVIL STATE OF CALIFORNIA REGISTERED PROFESSIONAL ENGINEER

THE STATE OF CALIFORNIA OR ITS OFFICERS OR AGENTS SHALL NOT BE RESPONSIBLE FOR THE ACCURACY OR COMPLETENESS OF SCANNED COPIES OF THIS PLAN SHEET.

NOTES:

1. "U" frame shape assembly shown. Use either "U" frame shape or "A" frame shape.
2. Wire sizes shown are the minimum required.
3. Use tie bar spacing for longitudinal dowel bar locations. See Standard Plans P1, P2, P3A, and P3B for tie bar requirements.
4. Weld may be at the top or bottom of the dowel bar.
5. Use anchor pins where soil or granular base is used. See Standard Plan P17 for anchor pin detail.

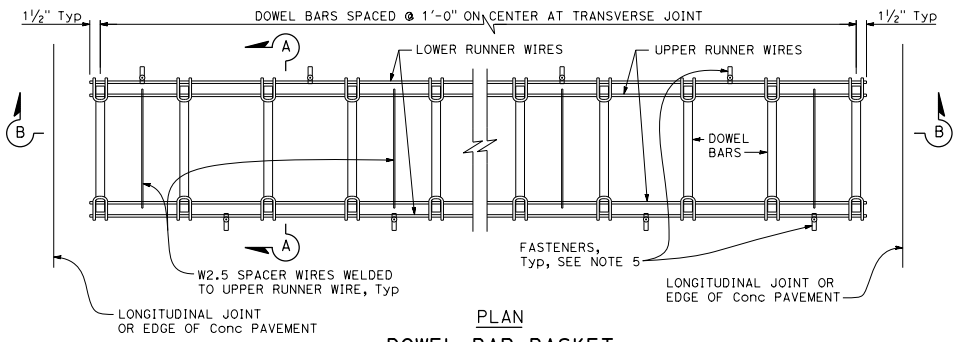

PLAN

DOWEL BAR BASKET (TRANSVERSE JOINT)

See Note 1

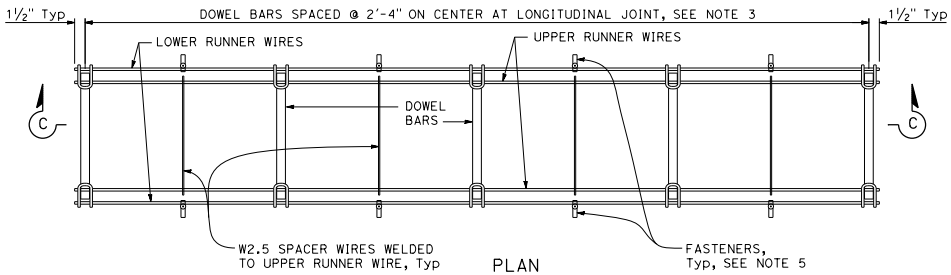

PLAN

DOWEL BAR BASKET (LONGITUDINAL JOINT)

See Note 1

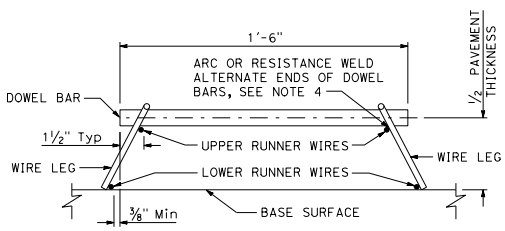

SECTION A-A

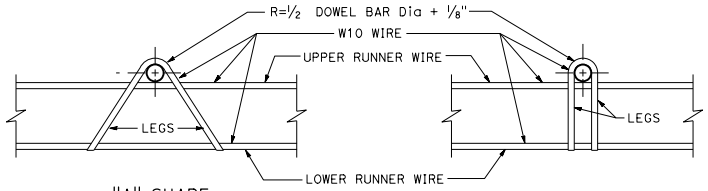

"A" SHAPE "U" SHAPE

ASSEMBLY FRAME DETAILS

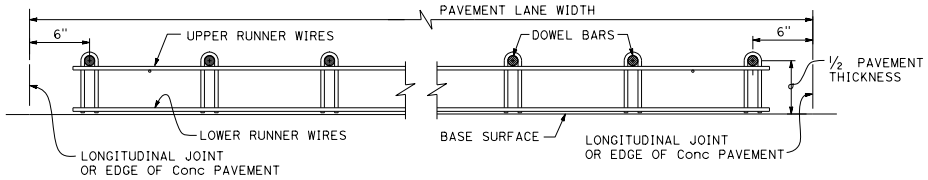

SECTION B-B

See Note 1

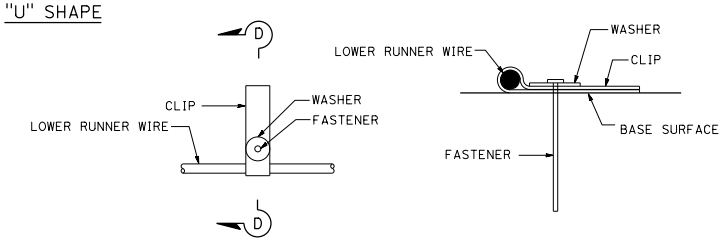

PLAN SECTION D-D

FASTENER DETAIL

See Note 5

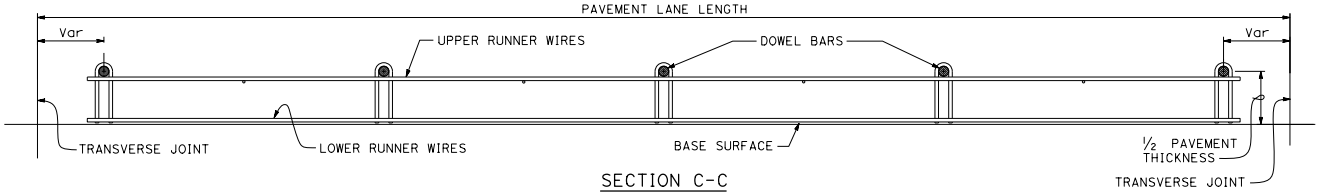

SECTION C-C

STATE OF CALIFORNIA
DEPARTMENT OF TRANSPORTATION

CONCRETE PAVEMENT DOWEL BAR BASKET DETAILS

NO SCALE

P12

2026 STANDARD PLAN P12

7-1-26

Return to Table of Contents

Dist	COUNTY	ROUTE	POST MILES TOTAL PROJECT	SHEET No.	TOTAL SHEETS

REGISTERED CIVIL ENGINEER

September 18, 2026
PLANS APPROVAL DATE

REGISTERED PROFESSIONAL ENGINEER
Dulce Rufino Feldman
No. C81459
Exp. 9-30-27
CIVIL
STATE OF CALIFORNIA

THE STATE OF CALIFORNIA OR ITS OFFICERS OR AGENTS SHALL NOT BE RESPONSIBLE FOR THE ACCURACY OR COMPLETENESS OF SCANNED COPIES OF THIS PLAN SHEET.

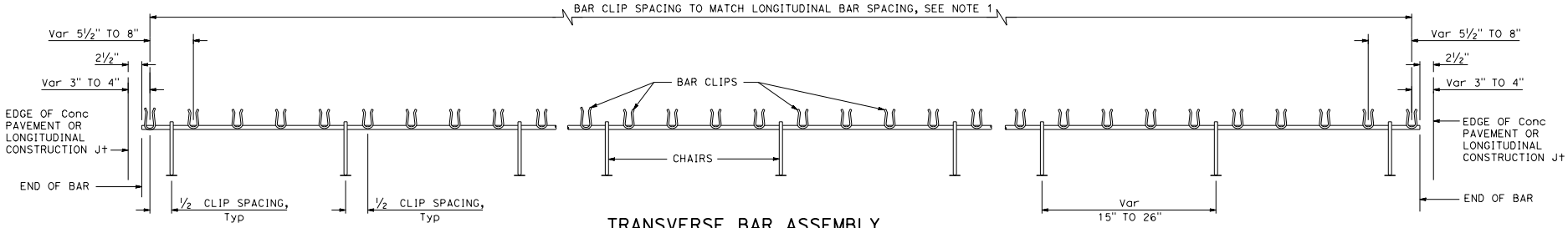

TRANSVERSE BAR ASSEMBLY

NOTES:

1. See Standard Plan P4 for spacing of longitudinal bars.
2. Tensile strength of chair shall be at least 50,000 psi.
3. Wire sizes shown are minimum required.
4. For concrete cover (X), see Table 1 in Standard Plan P4.

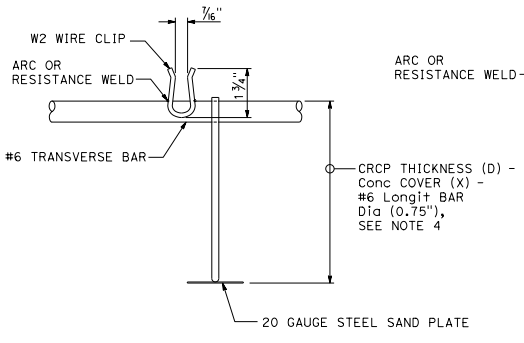

#6 BAR CLIP DETAIL

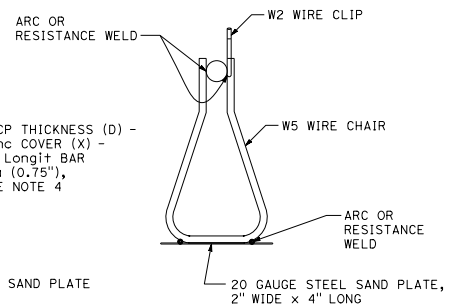

CHAIR DETAIL

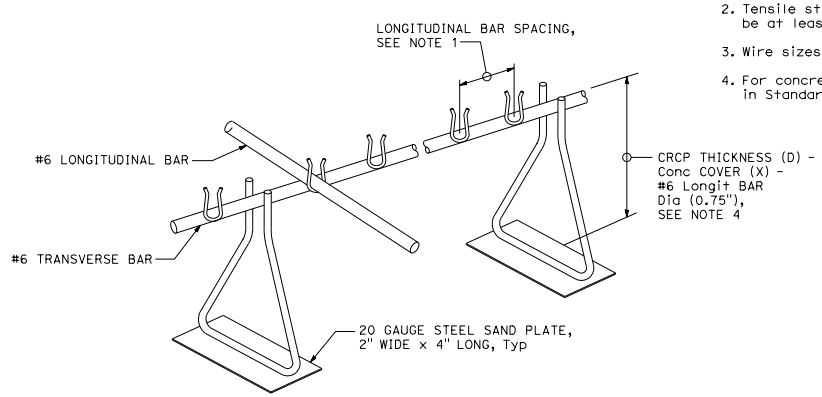

ISOMETRIC VIEW OF CHAIR ASSEMBLY

STATE OF CALIFORNIA
DEPARTMENT OF TRANSPORTATION

CONTINUOUSLY REINFORCED CONCRETE PAVEMENT SINGLE PIECE TRANSVERSE BAR ASSEMBLY

NO SCALE

P13

2026 STANDARD PLAN P13

7-1-26

Return to Table of Contents

Dist	COUNTY	ROUTE	POST MILES TOTAL PROJECT	SHEET No.	TOTAL SHEETS

REGISTERED CIVIL ENGINEER

September 18, 2026

PLANS APPROVAL DATE

REGISTERED PROFESSIONAL ENGINEER Dulce Rufino Feldman No. C81459 Exp. 9-30-27 CIVIL STATE OF CALIFORNIA

THE STATE OF CALIFORNIA OR ITS OFFICERS OR AGENTS SHALL NOT BE RESPONSIBLE FOR THE ACCURACY OR COMPLETENESS OF SCANNED COPIES OF THIS PLAN SHEET.

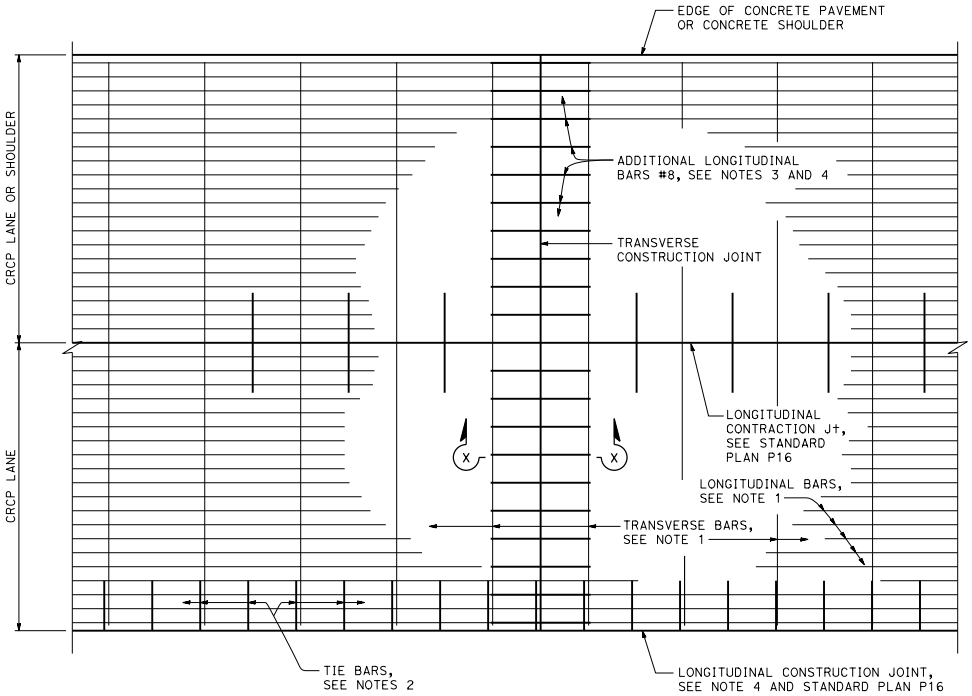

DETAIL A

Additional longitudinal bars at transverse construction joint

NOTES:

1. For transverse and longitudinal bar sizes, spacing and clearances, see Table 1 on Standard Plan P4.
2. For tie bars in longitudinal construction joint, see Standard Plan P16.
3. Place additional longitudinal bars parallel to and in the same plane as the longitudinal bars.
4. Place additional longitudinal bars symmetrically about longitudinal construction joint.

ABBREVIATION:

D = Thickness of CRCP

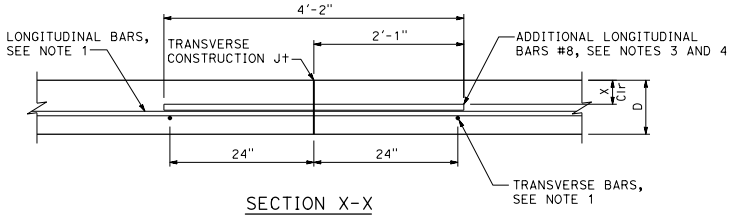

SECTION X-X

TRANSVERSE CONSTRUCTION JOINT

STATE OF CALIFORNIA
DEPARTMENT OF TRANSPORTATION

CONTINUOUSLY REINFORCED CONCRETE PAVEMENT TRANSVERSE CONSTRUCTION JOINT

NO SCALE

P14

2026 STANDARD PLAN P14

7-1-26

Return to Table of Contents

Dist	COUNTY	ROUTE	POST MILES TOTAL PROJECT	SHEET No.	TOTAL SHEETS

REGISTERED CIVIL ENGINEER

September 18, 2026

PLANS APPROVAL DATE

REGISTERED PROFESSIONAL ENGINEER Dulce Rufino Feldman No. C81459 Exp. 9-30-27 CIVIL STATE OF CALIFORNIA

THE STATE OF CALIFORNIA OR ITS OFFICERS OR AGENTS SHALL NOT BE RESPONSIBLE FOR THE ACCURACY OR COMPLETENESS OF SCANNED COPIES OF THIS PLAN SHEET.

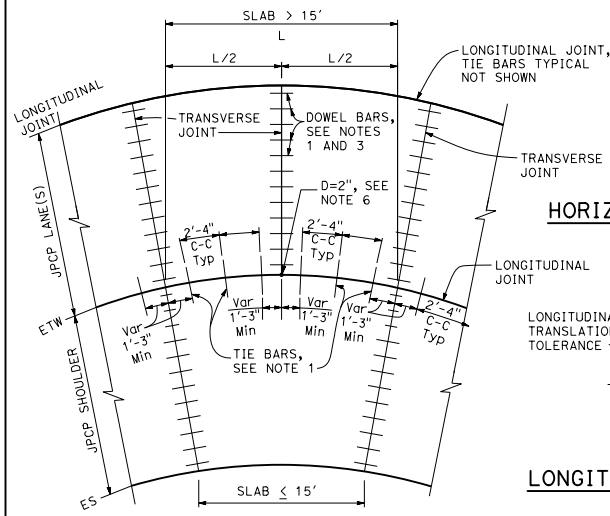

TIE BAR LAYOUT IN CURVED LANES

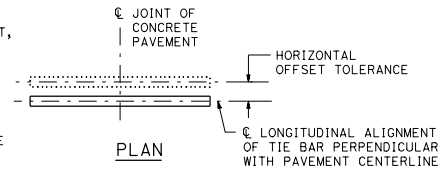

HORIZONTAL OFFSET TOLERANCE

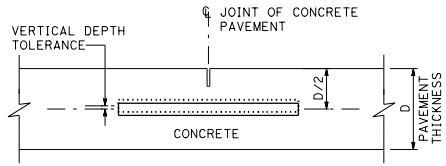

VERTICAL DEPTH TOLERANCE

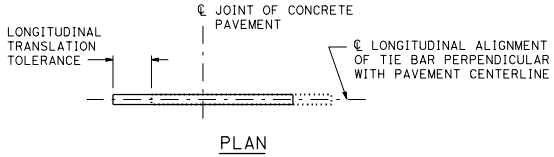

LONGITUDINAL TRANSLATION TOLERANCE

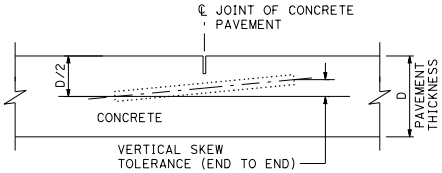

VERTICAL SKEW TOLERANCE

NOTES:

1. See Standard Plan P1 for typical dowel bar and tie bar placement and locations.
2. Where new pavement is placed against existing concrete pavement, rounding the corner is not required.
3. For dowel bar sizes, See Standard Plan P10.
4. Tie bar details apply to inside widenings.
5. Use either drill and bond or splice couplers.
6. Full depth drilled hole. Fill hole with filler material.
7. The bottom of the saw cut must be at least 0.5" clear of any dowel bar, tie bar and bar reinforcement.

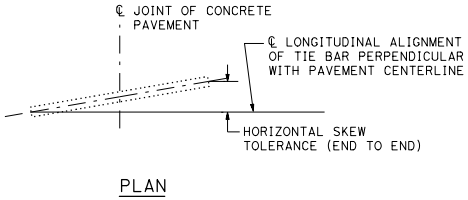

HORIZONTAL SKEW TOLERANCE

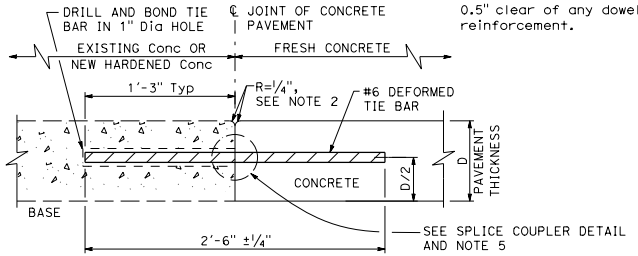

LONGITUDINAL CONSTRUCTION JOINT

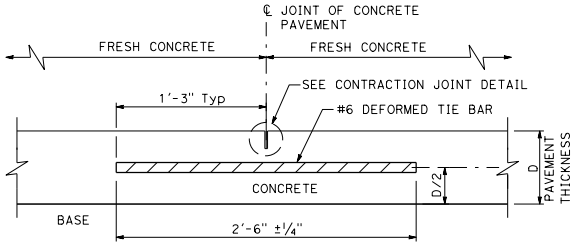

LONGITUDINAL CONTRACTION JOINT

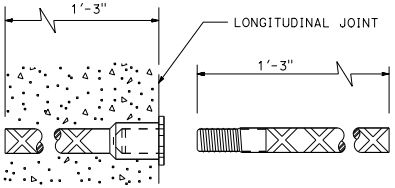

ALTERNATIVE SPLICE COUPLER

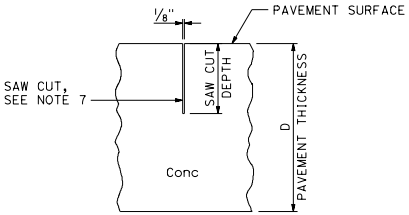

CONTRACTION JOINT DETAIL

STATE OF CALIFORNIA
DEPARTMENT OF TRANSPORTATION

CONCRETE PAVEMENT TIE BAR DETAILS

NO SCALE

P15

2026 STANDARD PLAN P15

7-1-26

Return to Table of Contents

Dist	COUNTY	ROUTE	POST MILES TOTAL PROJECT	SHEET No.	TOTAL SHEETS

REGISTERED CIVIL ENGINEER

September 18, 2026
PLANS APPROVAL DATE

REGISTERED PROFESSIONAL ENGINEER Dulce Rufino Feldman No. C81459 Exp. 9-30-27 CIVIL STATE OF CALIFORNIA

THE STATE OF CALIFORNIA OR ITS OFFICERS OR AGENTS SHALL NOT BE RESPONSIBLE FOR THE ACCURACY OR COMPLETENESS OF SCANNED COPIES OF THIS PLAN SHEET.

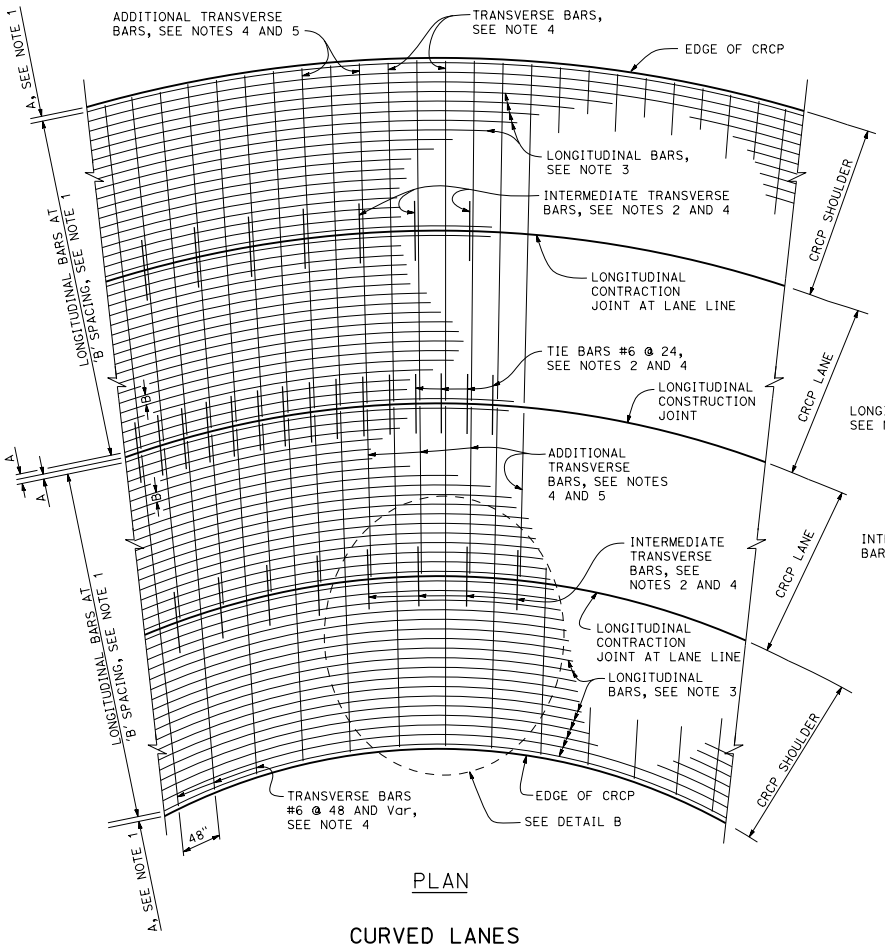

PLAN

CURVED LANES

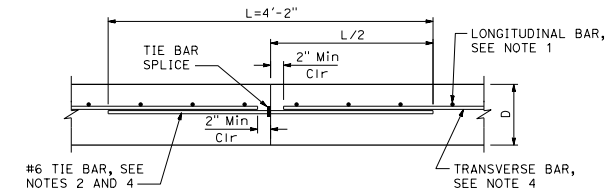

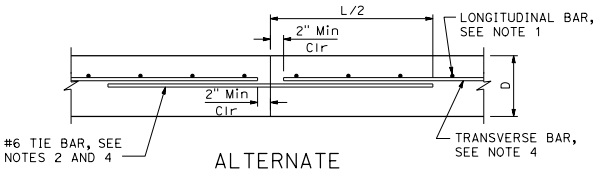

ALTERNATE

LONGITUDINAL CONSTRUCTION JOINT

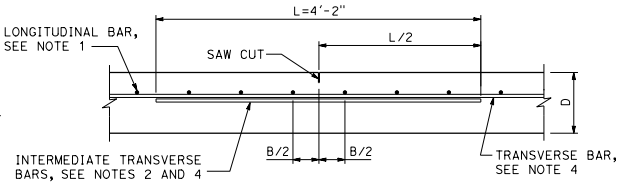

LONGITUDINAL CONTRACTION JOINT

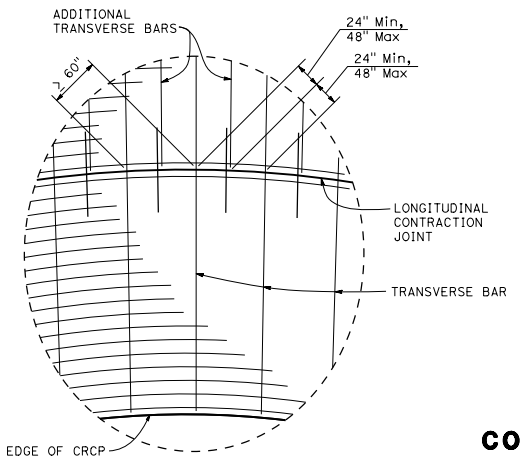

DETAIL B

NOTES:

1. For longitudinal bar spacing and clearances, see Table 1 on Standard Plan P4.
2. Place tie bars and intermediate transverse bars parallel to and in the same plane as the transverse bars.
3. Place longitudinal bars parallel to roadway curvature.
4. Place transverse bars, additional transverse bars, tie bars and intermediate transverse bars perpendicular to the pavement curvature.
5. Place additional transverse bars where required, see Detail B.
6. The bottom of the saw cut must be at least 0.5" clear of any dowel bar, tie bar and bar reinforcement.

ABBREVIATION:

D = Thickness of CRCP

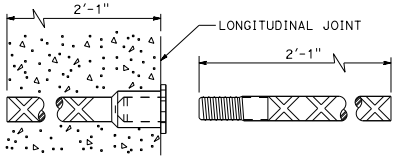

TIE BAR SPLICE COUPLER DETAIL

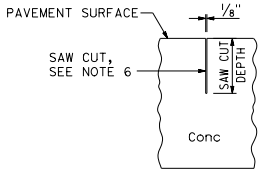

CONTRACTION JOINT SAW CUT

STATE OF CALIFORNIA
DEPARTMENT OF TRANSPORTATION

CONTINUOUSLY REINFORCED CONCRETE PAVEMENT TIE BARS AND JOINT DETAILS

NO SCALE

P16

2026 STANDARD PLAN P16

7-1-26

Return to Table of Contents

Dist	COUNTY	ROUTE	POST MILES TOTAL PROJECT	SHEET No.	TOTAL SHEETS

REGISTERED CIVIL ENGINEER

September 18, 2026
PLANS APPROVAL DATE

REGISTERED PROFESSIONAL ENGINEER Dulce Rufino Feldman No. C81459 Exp. 9-30-27 CIVIL STATE OF CALIFORNIA

THE STATE OF CALIFORNIA OR ITS OFFICERS OR AGENTS SHALL NOT BE RESPONSIBLE FOR THE ACCURACY OR COMPLETENESS OF SCANNED COPIES OF THIS PLAN SHEET.

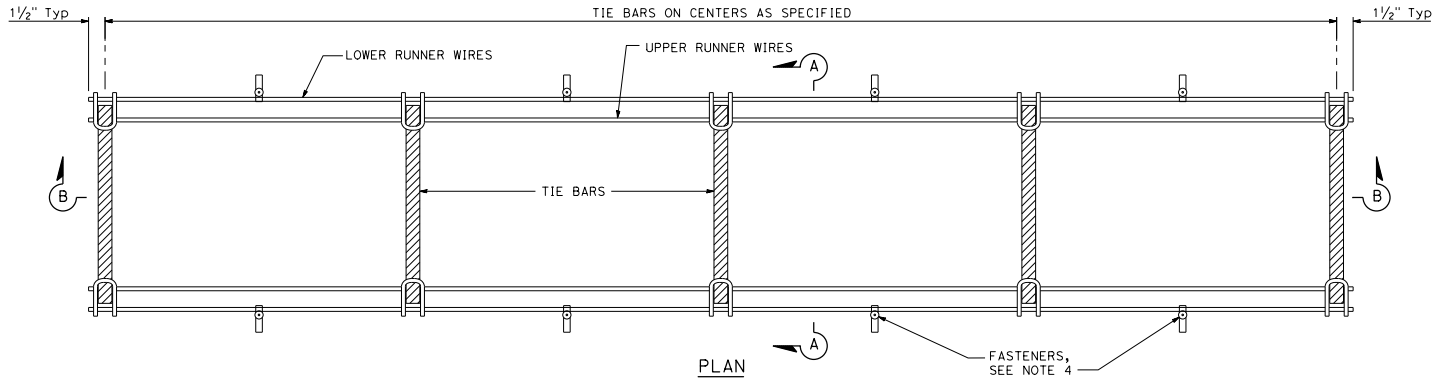

PLAN

TIE BAR BASKET

(Tie bars at longitudinal joint)
See Note 1

NOTES:

1. "U" frame shape assembly shown. Use either "U" frame shape or "A" frame shape.
2. Wire sizes shown are the minimum required.
3. Weld may be at top or bottom of tie bars.
4. Use anchor pins where soil or granular base is used.

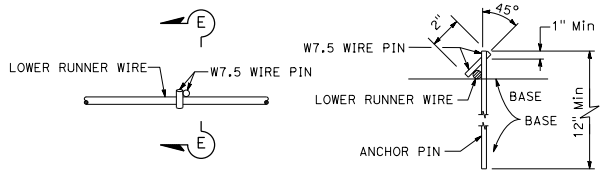

PLAN

SECTION E-E

ANCHOR PIN DETAILS

See Note 4

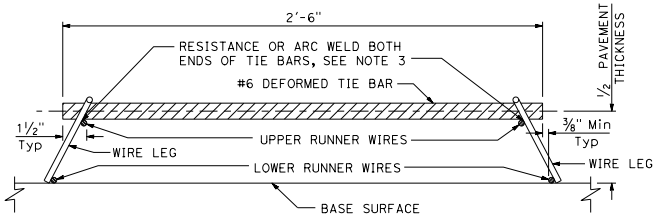

SECTION A-A

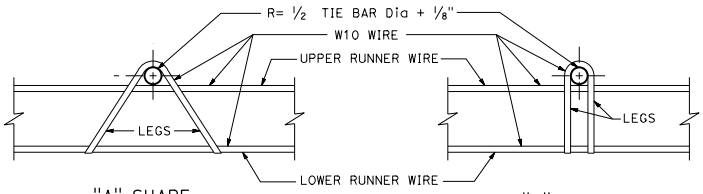

"A" SHAPE

"U" SHAPE

ASSEMBLY FRAME DETAILS

See Note 1

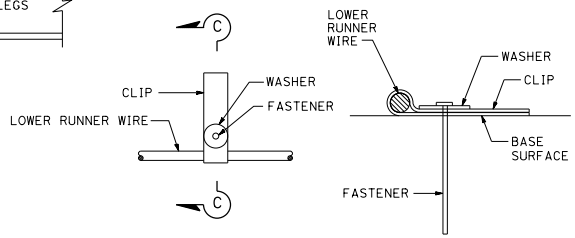

PLAN

SECTION C-C

FASTENER DETAILS

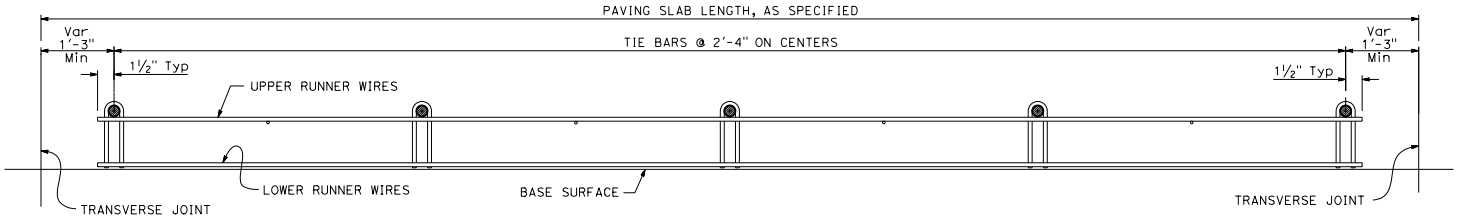

SECTION B-B

See Note 1

STATE OF CALIFORNIA
DEPARTMENT OF TRANSPORTATION

CONCRETE PAVEMENT TIE BAR BASKET DETAILS

NO SCALE

P17

2026 STANDARD PLAN P17

7-1-26

Return to Table of Contents

Dist	COUNTY	ROUTE	POST MILES TOTAL PROJECT	SHEET No.	TOTAL SHEETS

REGISTERED CIVIL ENGINEER

September 18, 2026

PLANS APPROVAL DATE

REGISTERED PROFESSIONAL ENGINEER Dulce Rufino Feldman No. C81459 Exp. 9-30-27 CIVIL STATE OF CALIFORNIA

THE STATE OF CALIFORNIA OR ITS OFFICERS OR AGENTS SHALL NOT BE RESPONSIBLE FOR THE ACCURACY OR COMPLETENESS OF SCANNED COPIES OF THIS PLAN SHEET.

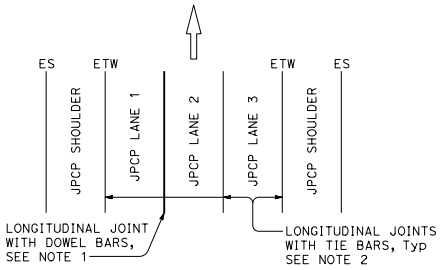

PLAN

3 LANES WITH CONCRETE SHOULDERS

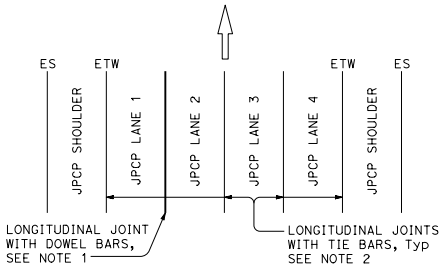

PLAN

4 LANES WITH CONCRETE SHOULDERS

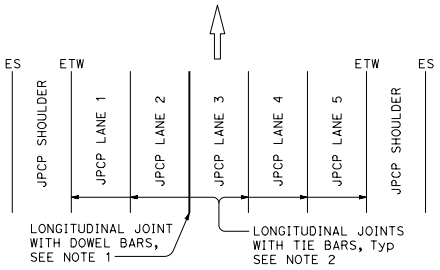

PLAN

5 LANES WITH CONCRETE SHOULDERS

NOTES:

1. See Standard Plan P10 for longitudinal joint with dowel bars.
2. See Standard Plan P15 for longitudinal joint with tie bars.
3. S = Reservoir depth.
   S = 7/8" ±1/16" for asphalt rubber seals
   S = 9/16" ±1/16" for silicone seals
   Preformed compression seals must be 13/16" wide and S = 1 11/16" ±1/16".

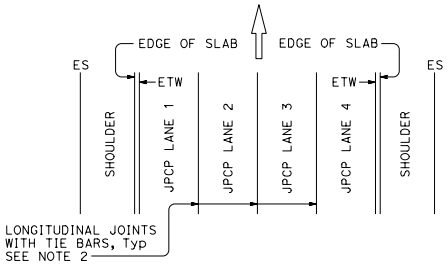

PLAN

4 LANES OR LESS WITH AC SHOULDERS

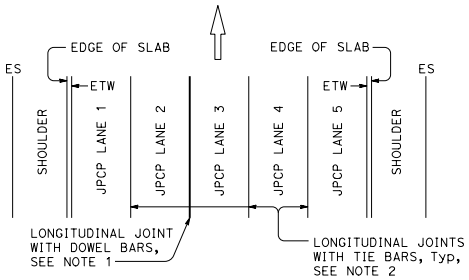

PLAN

5 LANES WITH AC SHOULDERS

NEW CONSTRUCTION

Location of Longitudinal Joints.
For JPCP

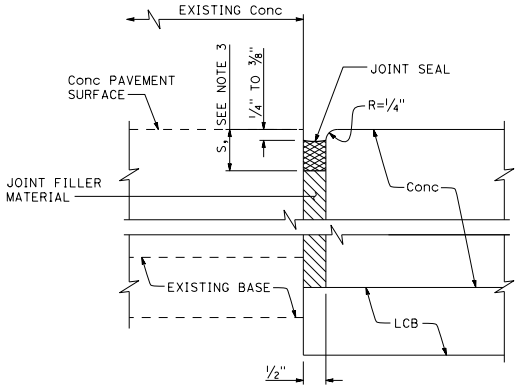

DETAIL A

ISOLATION JOINT

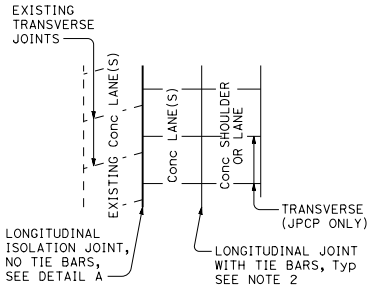

PLAN

CASE 1

Transverse Joints do not align between new and existing.

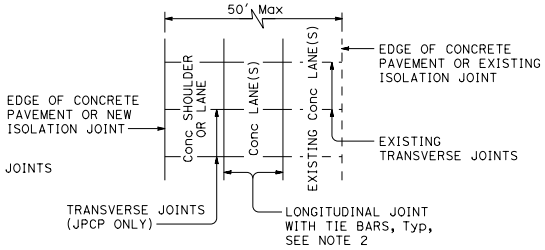

PLAN

CASE 2

Transverse Joints align between new and existing.
For JPCP only

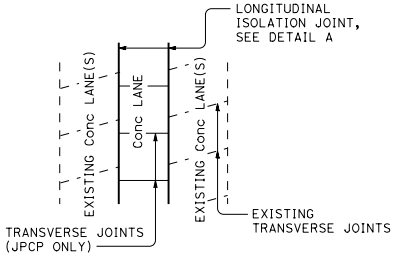

PLAN

CASE 3 (INTERIOR LANE REPLACEMENT)

Transverse Joints do not align between new and existing.

LANE/SHOULDER ADDITION OR RECONSTRUCTION

For JPCP and CRCP

STATE OF CALIFORNIA
DEPARTMENT OF TRANSPORTATION

CONCRETE PAVEMENT LANE SCHEMATICS AND ISOLATION JOINT DETAIL

NO SCALE

P18

2026 STANDARD PLAN P18

7-1-26

Return to Table of Contents

Dist	COUNTY	ROUTE	POST MILES TOTAL PROJECT	SHEET No.	TOTAL SHEETS

REGISTERED CIVIL ENGINEER

September 18, 2026

PLANS APPROVAL DATE

REGISTERED PROFESSIONAL ENGINEER Andre Totari No. C94691 Exp. 6-30-27 CIVIL STATE OF CALIFORNIA

THE STATE OF CALIFORNIA OR ITS OFFICERS OR AGENTS SHALL NOT BE RESPONSIBLE FOR THE ACCURACY OR COMPLETENESS OF SCANNED COPIES OF THIS PLAN SHEET.

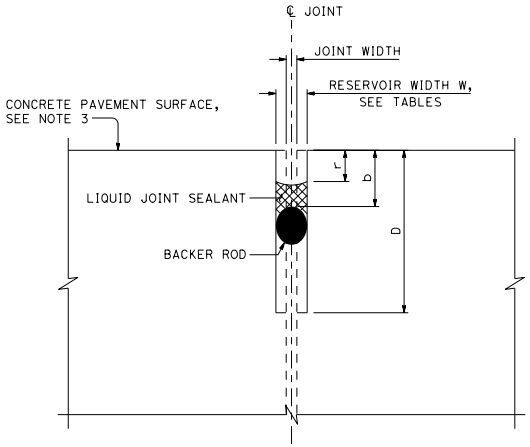

LIQUID JOINT SEALANT

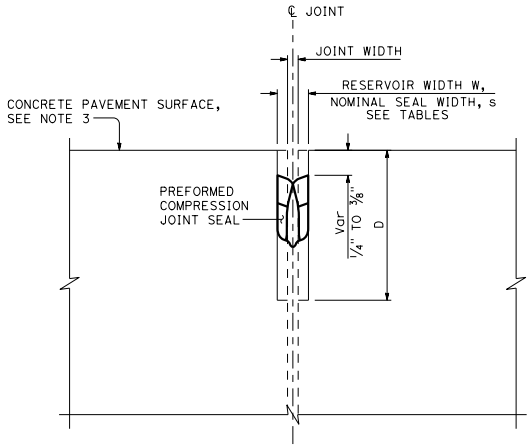

PREFORMED COMPRESSION JOINT SEAL

NOTES:

1. Details do not apply to isolation joints and longitudinal construction joints.
2. Tie bars, dowel bars, and bar reinforcement are not shown.
3. Depths are measured from the final concrete pavement surface elevation after any grinding.

LIQUID JOINT SEALANT DIMENSIONS

RESERVOIR WIDTH W ±1/16"	BACKER ROD NOMINAL Dia *	DEPTHS (ASPHALT RUBBER) **		DEPTHS (SILICONE)		
		RESERVOIR D ±1/4"	BACKER ROD b ±1/16"	RESERVOIR D ±1/4"	BACKER ROD b ±1/16"	RECESS r ±1/16"
1/4"	3/8"	1 3/4"	7/8"	1 3/8"	1/2"	1/4"
3/8"	1/2"	1 7/8"	7/8"	1 1/2"	1/2"	1/4"
1/2"	3/4"	2"	7/8"	1 3/4"	9/16"	5/16"
5/8"	7/8"	2 1/4"	1"	2"	5/8"	5/16"
3/4"	1"	2 3/4"	1 1/8"	2 1/4"	3/4"	3/8"
7/8"	1 1/4"	3"	1 1/4"	2 1/2"	13/16"	3/8"
1"	1 1/2"	3 1/4"	1 3/8"	2 5/8"	7/8"	3/8"
1 1/8"	1 1/2"	3 1/2"	1 1/2"	2 13/16"	1"	1/2"

* Larger diameter backer rods may be substituted according to manufacturer recommendations if reservoir depth is increased equivalently.

** Asphalt rubber sealant recess depth "r" varies from 1/4" to 3/8".

PREFORMED COMPRESSION JOINT SEAL DIMENSIONS

RESERVOIR WIDTH W ±1/16"	NOMINAL SEAL WIDTH s	RESERVOIR DEPTH D ±1/4"
1/4"	7/16"	1 1/4"
3/8"	11/16"	1 7/16"
1/2"	13/16"	1 11/16"
5/8"	1"	1 7/8"
3/4"	1 1/4"	2 1/8"
7/8"	1 5/8"	2 5/8"
1"	1 5/8"	2 5/8"
1 1/8"	2"	2 7/8"

CONSTRUCTION SEASON	MINIMUM RESERVOIR WIDTH * W ±1/16"
WINTER	1/4"
SPRING	3/8"
SUMMER	
FALL	

* Minimum reservoir width for replace joint seal = existing joint width + 1/8".

STATE OF CALIFORNIA
DEPARTMENT OF TRANSPORTATION

JOINT SEALS

NO SCALE

P20

2026 STANDARD PLAN P20

7-1-26

Return to Table of Contents

Dist	COUNTY	ROUTE	POST MILES TOTAL PROJECT	SHEET No.	TOTAL SHEETS

REGISTERED CIVIL ENGINEER

September 18, 2026

PLANS APPROVAL DATE

REGISTERED PROFESSIONAL ENGINEER Dulce Rufino Feldman No. C81459 Exp. 9-30-27 CIVIL STATE OF CALIFORNIA

THE STATE OF CALIFORNIA OR ITS OFFICERS OR AGENTS SHALL NOT BE RESPONSIBLE FOR THE ACCURACY OR COMPLETENESS OF SCANNED COPIES OF THIS PLAN SHEET.

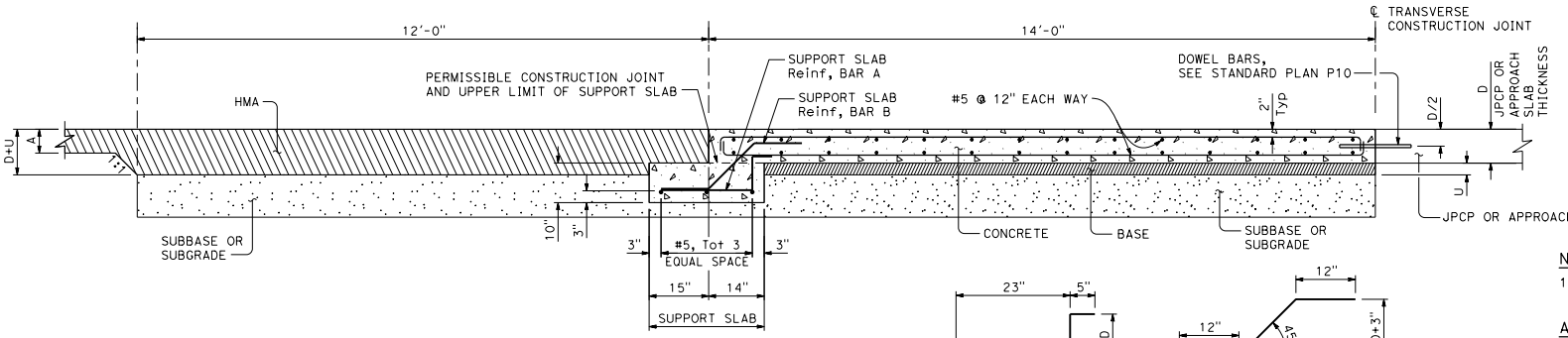

ELEVATION

CONCRETE PAVEMENT TRANSITION PANEL

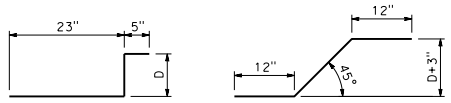

#5 BAR A
At 12" C-C

#5 BAR B
At 12" C-C

SUPPORT SLAB REINFORCEMENT DETAILS

NOTE:

1. Maintain same base thickness as JPCP or approach slab.

ABBREVIATIONS:

A = Depth of HMA as shown on Project Plans
D = Thickness of JPCP or approach slab
U = Thickness of Base

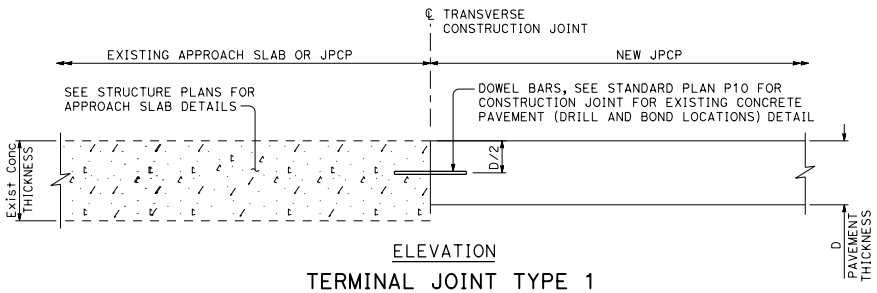

ELEVATION

TERMINAL JOINT TYPE 1

For Exist JPCP or Approach Slab

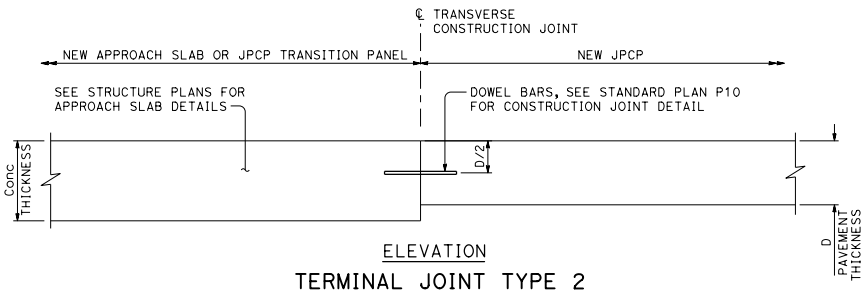

ELEVATION

TERMINAL JOINT TYPE 2

For JPCP Transition Panel or Approach Slab

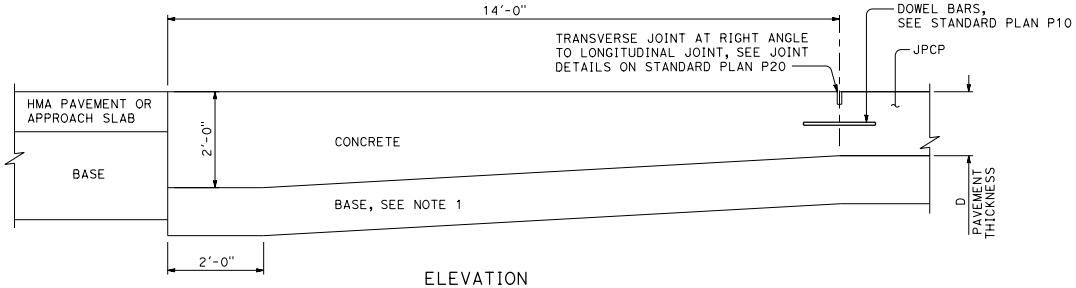

ELEVATION

PAVEMENT END ANCHOR

For HMA Pavement or Approach Slab

STATE OF CALIFORNIA
DEPARTMENT OF TRANSPORTATION

CONCRETE PAVEMENT END PANEL PAVEMENT TRANSITIONS

NO SCALE

P30

7-1-26

2026 STANDARD PLAN P30

Return to Table of Contents

Dist	COUNTY	ROUTE	POST MILES TOTAL PROJECT	SHEET No.	TOTAL SHEETS

REGISTERED CIVIL ENGINEER

September 18, 2026
PLANS APPROVAL DATE

REGISTERED PROFESSIONAL ENGINEER Dulce Rufino Feldman No. C81459 Exp. 9-30-27 CIVIL STATE OF CALIFORNIA

THE STATE OF CALIFORNIA OR ITS OFFICERS OR AGENTS SHALL NOT BE RESPONSIBLE FOR THE ACCURACY OR COMPLETENESS OF SCANNED COPIES OF THIS PLAN SHEET.

ABBREVIATIONS:

D = Thickness of CRCP
A = Depth of HMA as shown on Project Plans
U = Thickness of Base

NOTES:

1. See Standard Plan B6-21 for "a".
2. For layout, tolerances, and other details not shown, see Standard Plan P10.
3. See Standard Plan P32.

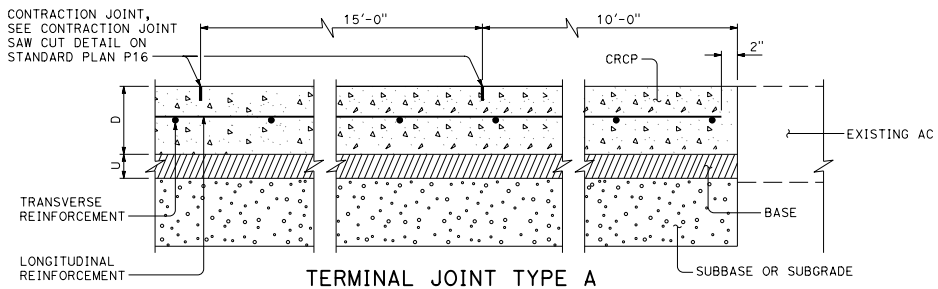

TERMINAL JOINT TYPE A

For Existing AC

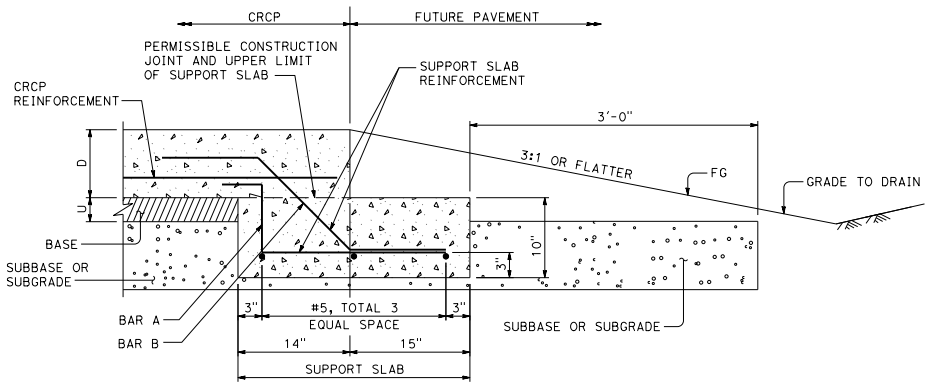

TERMINAL JOINT TYPE B

For Future Pavement

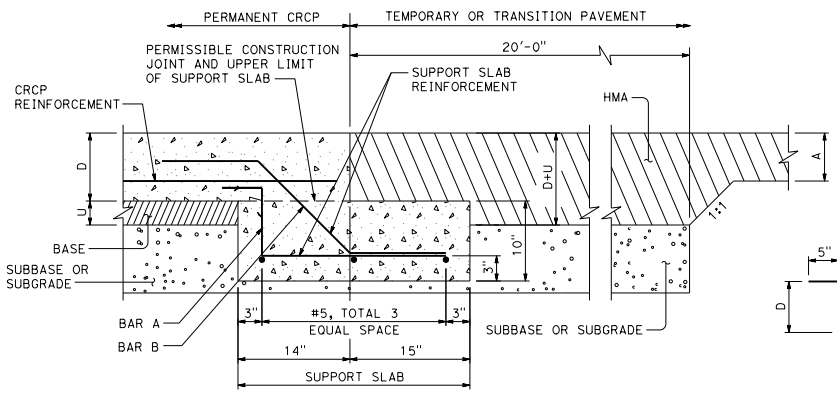

TERMINAL JOINT TYPE C

For HMA Pavement

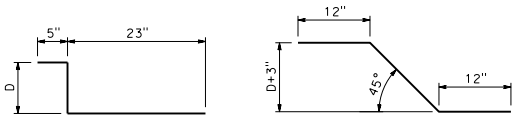

#5 BAR A
At 12" C-C

#5 BAR B
At 12" C-C

REINFORCEMENT DETAIL

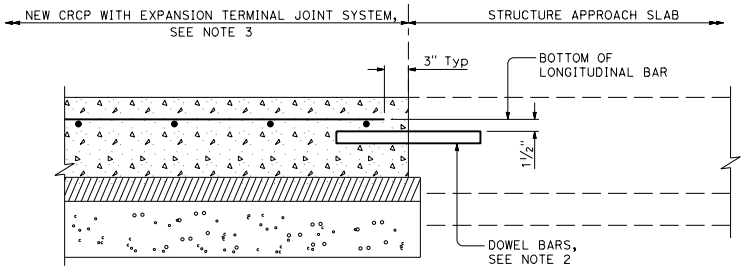

TERMINAL JOINT TYPE F

For Structure Approach Slabs

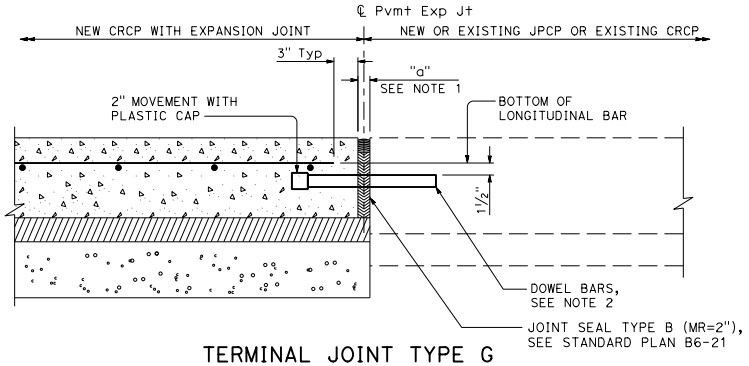

TERMINAL JOINT TYPE G

For New or Existing JPCP or Existing CRCP

STATE OF CALIFORNIA
DEPARTMENT OF TRANSPORTATION

CONTINUOUSLY REINFORCED CONCRETE PAVEMENT TERMINAL JOINT DETAILS

NO SCALE

P31A

7-1-26

2026 STANDARD PLAN P31A

Return to Table of Contents

Dist	COUNTY	ROUTE	POST MILES TOTAL PROJECT	SHEET No.	TOTAL SHEETS

REGISTERED CIVIL ENGINEER

September 18, 2026
PLANS APPROVAL DATE

REGISTERED PROFESSIONAL ENGINEER
Dulce Rufino Feldman
No. C81459
Exp. 9-30-27
CIVIL
STATE OF CALIFORNIA

THE STATE OF CALIFORNIA OR ITS OFFICERS OR AGENTS SHALL NOT BE RESPONSIBLE FOR THE ACCURACY OR COMPLETENESS OF SCANNED COPIES OF THIS PLAN SHEET.

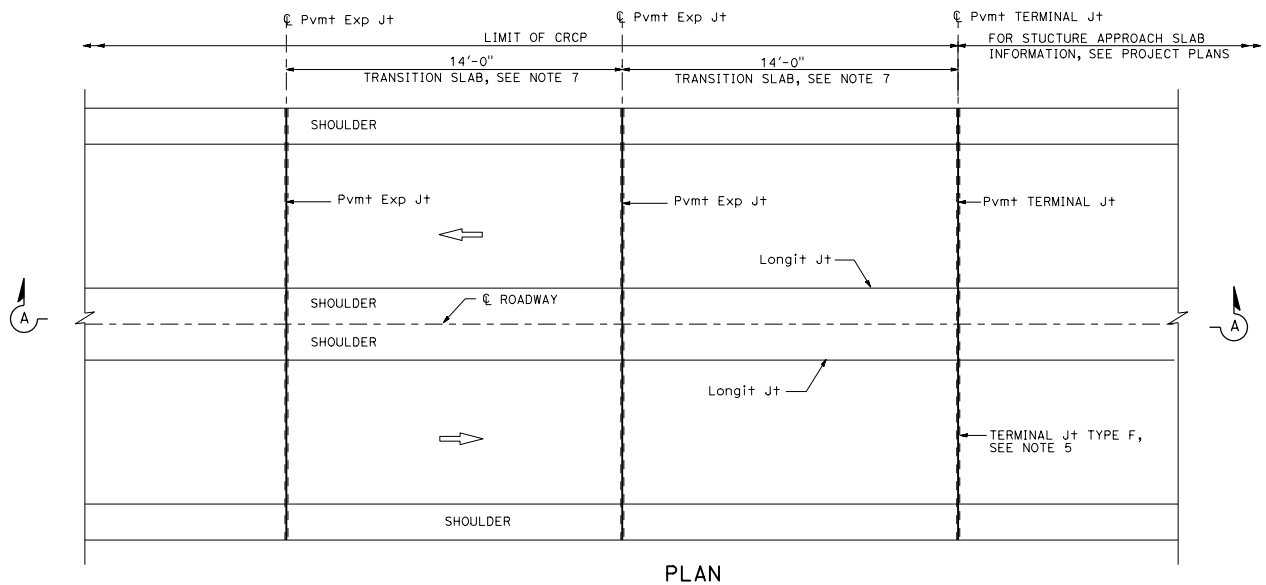

PLAN

NOTES:

1. D = Thickness of CRCP (See Project Plans).
2. See Standard Plan B6-21 for "a".
3. Extend support slab 2'-0" beyond the outside edges of CRCP.
4. For layout, tolerances, and other details not shown, see Standard Plan P10.
5. For the Pavement Terminal Joint Type F Detail, See Standard Plan P31A.
6. No bar splices allowed within 14'-0" of expansion joints.
7. No bar splices allowed in transition slabs.

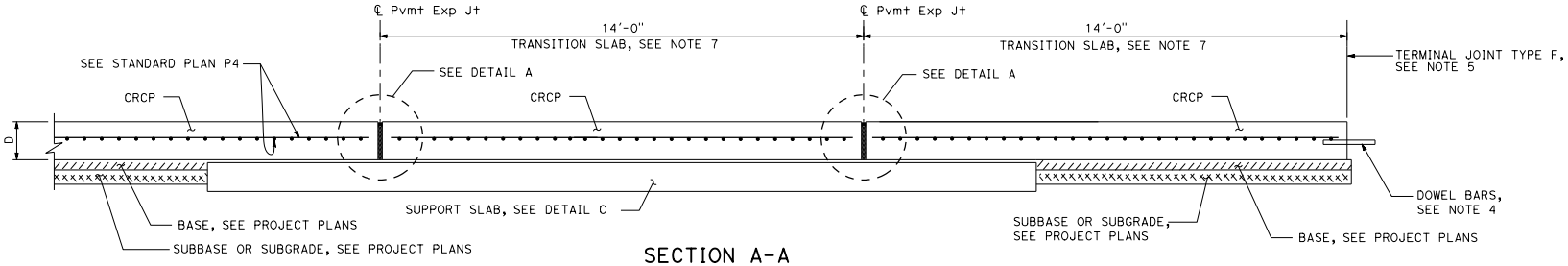

SECTION A-A

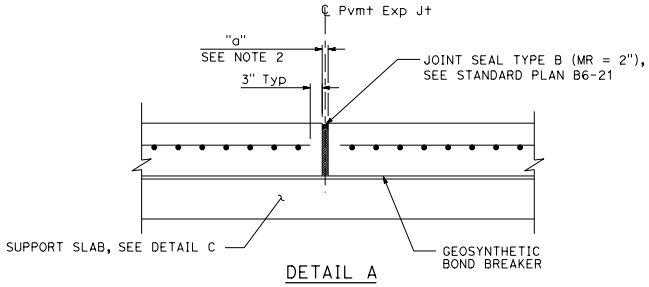

DETAIL A

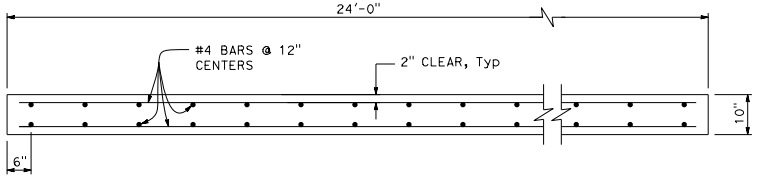

DETAIL C
Support slab, see Note 3

STATE OF CALIFORNIA
DEPARTMENT OF TRANSPORTATION

CONTINUOUSLY REINFORCED CONCRETE PAVEMENT EXPANSION TERMINAL JOINT SYSTEM

NO SCALE

P32

2026 STANDARD PLAN P32

7-1-26

Return to Table of Contents

Dist	COUNTY	ROUTE	POST MILES TOTAL PROJECT	SHEET No.	TOTAL SHEETS

REGISTERED CIVIL ENGINEER

September 18, 2026
PLANS APPROVAL DATE

REGISTERED PROFESSIONAL ENGINEER
Dulce Rufino Feldman
No. C81459
Exp. 9-30-27
CIVIL
STATE OF CALIFORNIA

THE STATE OF CALIFORNIA OR ITS OFFICERS OR AGENTS SHALL NOT BE RESPONSIBLE FOR THE ACCURACY OR COMPLETENESS OF SCANNED COPIES OF THIS PLAN SHEET.

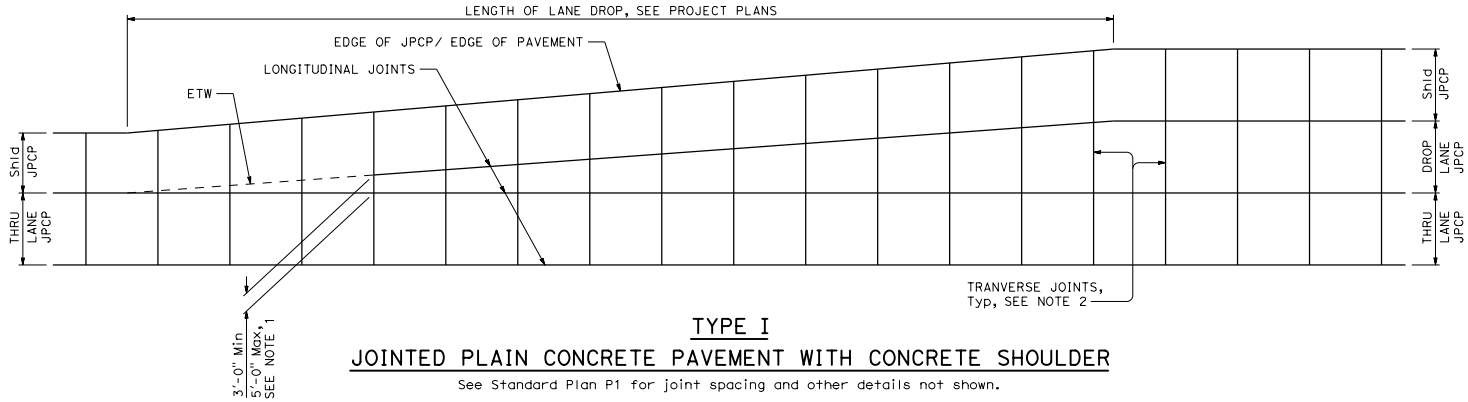

TYPE I

JOINTED PLAIN CONCRETE PAVEMENT WITH CONCRETE SHOULDER

See Standard Plan P1 for joint spacing and other details not shown.

NOTES:

1. Location of transverse joint to match transverse joint of adjacent lane.
2. Place transverse joint of lane and shoulder perpendicular to longitudinal joint of thru lane.

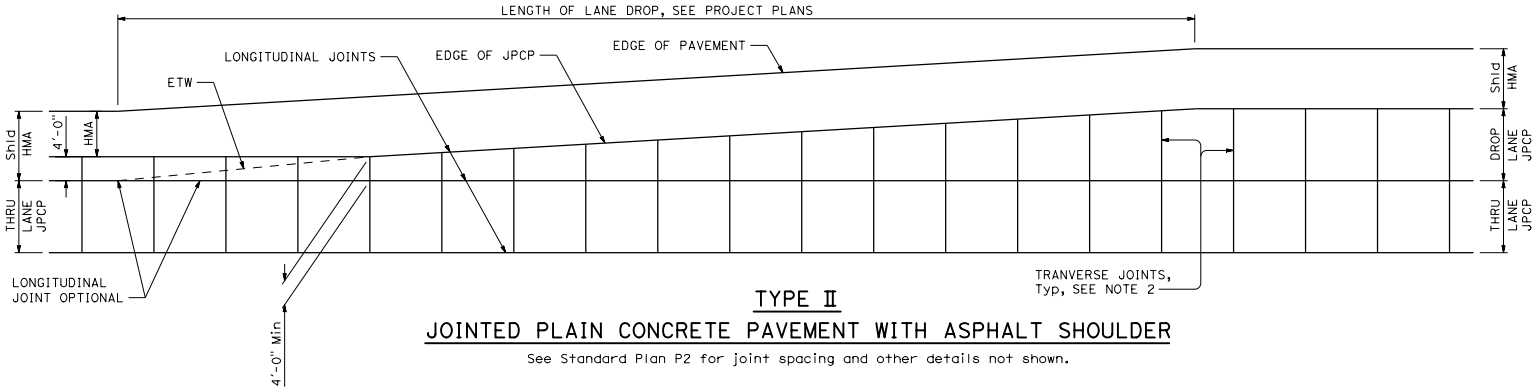

TYPE II

JOINTED PLAIN CONCRETE PAVEMENT WITH ASPHALT SHOULDER

See Standard Plan P2 for joint spacing and other details not shown.

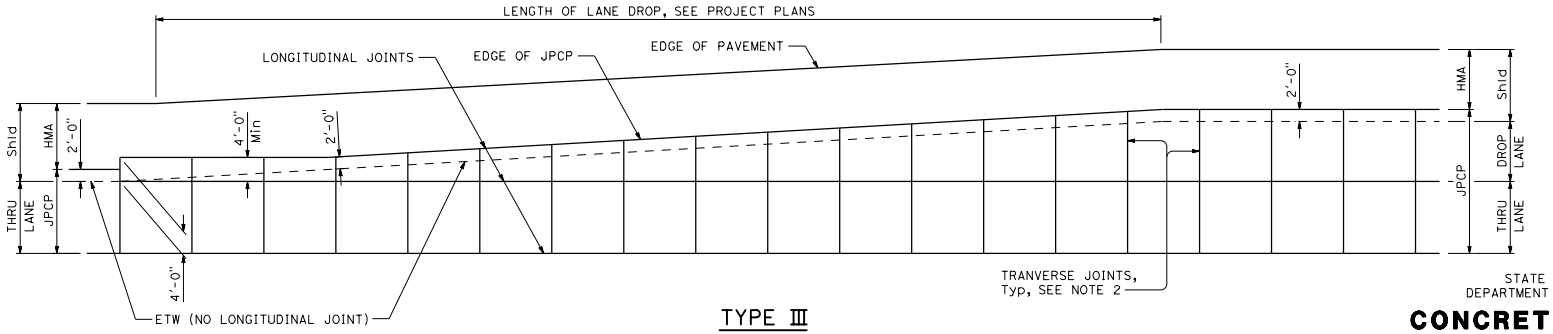

TYPE III

JOINTED PLAIN CONCRETE PAVEMENT WITH WIDENED SLAB AND ASPHALT SHOULDER

See Standard Plan P2 for joint spacing and other details not shown.

STATE OF CALIFORNIA
DEPARTMENT OF TRANSPORTATION

CONCRETE PAVEMENT LANE DROP PAVING DETAILS No. 1

NO SCALE

P33

7-1-26

2026 STANDARD PLAN P33

Return to Table of Contents

Dist	COUNTY	ROUTE	POST MILES TOTAL PROJECT	SHEET No.	TOTAL SHEETS

REGISTERED CIVIL ENGINEER

September 18, 2026
PLANS APPROVAL DATE

REGISTERED PROFESSIONAL ENGINEER
Dulce Rufino Feldman
No. C81459
Exp. 9-30-27
CIVIL
STATE OF CALIFORNIA

THE STATE OF CALIFORNIA OR ITS OFFICERS OR AGENTS SHALL NOT BE RESPONSIBLE FOR THE ACCURACY OR COMPLETENESS OF SCANNED COPIES OF THIS PLAN SHEET.

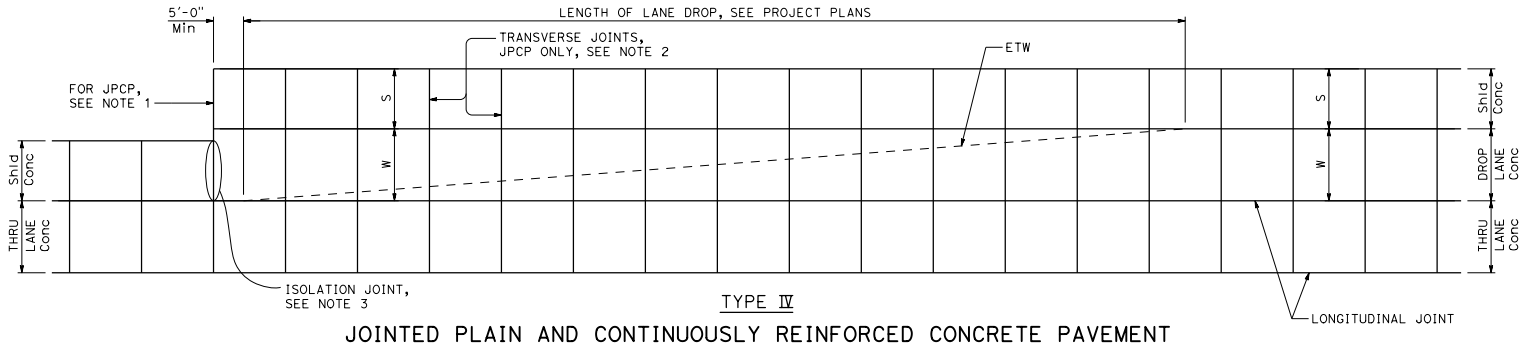

TYPE IV

JOINTED PLAIN AND CONTINUOUSLY REINFORCED CONCRETE PAVEMENT

See Standard Plans P1, P2, or P4 for details not shown.

NOTES:

1. Location of transverse joint to match transverse joint of adjacent lane.
2. Place transverse joint of lane and shoulder perpendicular to longitudinal joint of through lane.
3. Isolation joint detail shown on Standard Plan P18.

LEGEND:

S - SHOULDER WIDTH
W - LANE WIDTH

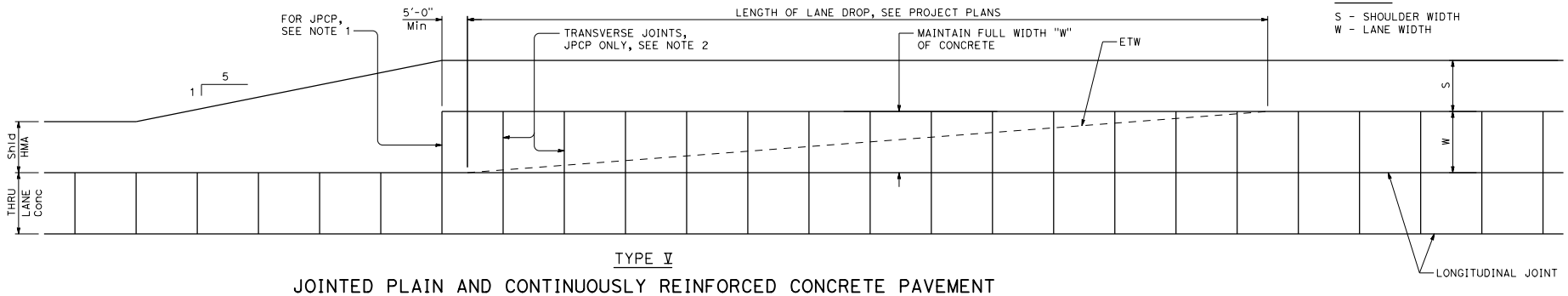

TYPE V

JOINTED PLAIN AND CONTINUOUSLY REINFORCED CONCRETE PAVEMENT

See Standard Plans P1, P2, or P4 for details not shown.

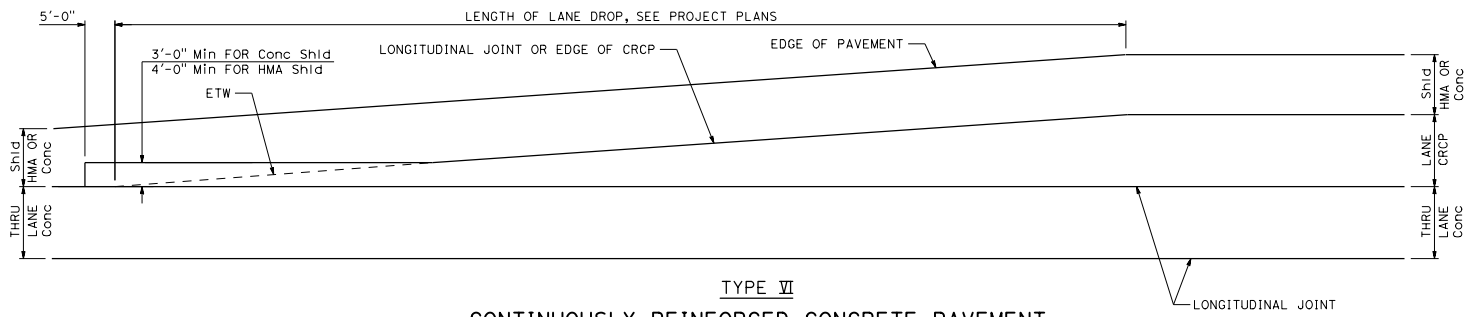

TYPE VI

CONTINUOUSLY REINFORCED CONCRETE PAVEMENT

See Standard Plan P4 for details not shown.

STATE OF CALIFORNIA
DEPARTMENT OF TRANSPORTATION

CONCRETE PAVEMENT
LANE DROP PAVING DETAILS No. 2

NO SCALE

P34

2026 STANDARD PLAN P34

7-1-26

Return to Table of Contents

Dist	COUNTY	ROUTE	POST MILES TOTAL PROJECT	SHEET No.	TOTAL SHEETS

REGISTERED CIVIL ENGINEER

September 18, 2026
PLANS APPROVAL DATE

REGISTERED PROFESSIONAL ENGINEER Dulce Rufino Feldman No. C81459 Exp. 9-30-27 CIVIL STATE OF CALIFORNIA

THE STATE OF CALIFORNIA OR ITS OFFICERS OR AGENTS SHALL NOT BE RESPONSIBLE FOR THE ACCURACY OR COMPLETENESS OF SCANNED COPIES OF THIS PLAN SHEET.

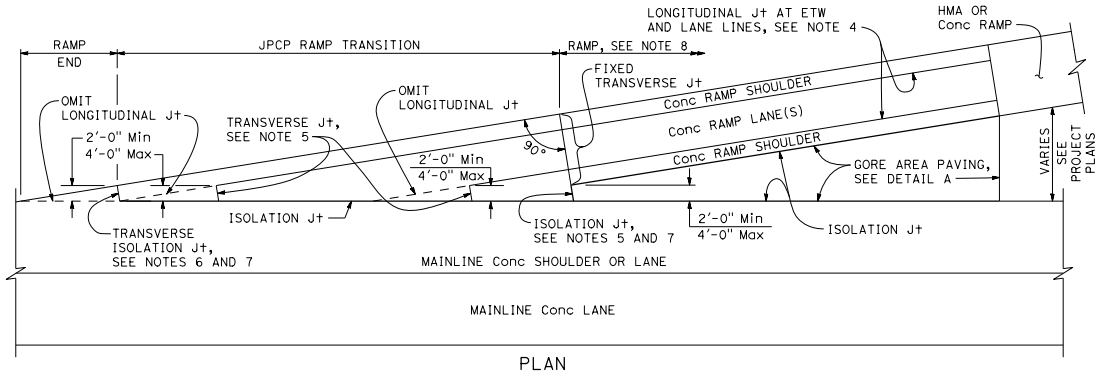

PLAN

RAMP TRANSITION DETAIL

See Note 1

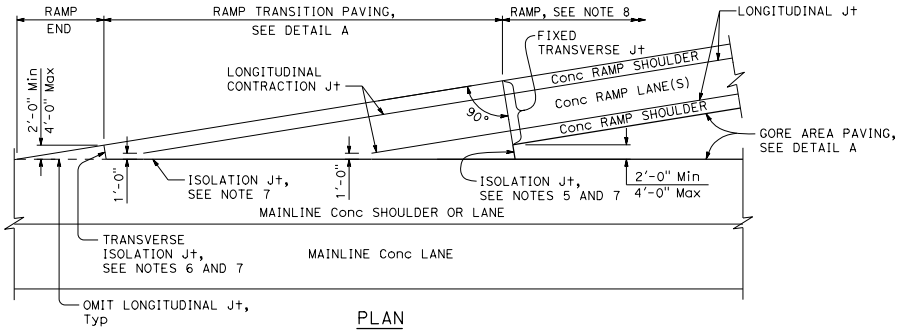

PLAN

ALTERNATE RAMP TRANSITION DETAIL

For JPCP and CRCP

NOTES:

1. Details for gore area paving are applicable to both exit and entrance ramps.
2. Transverse Joint Layouts are not shown. Refer to Standard Plan P1 or Project Plans for details regarding joint layouts, tie bars, and dowel bars not shown.
3. WWF 4 x 4 - W4.0 x W4.0 can be used in place of steel reinforcement for gore area paving only.
4. Omit longitudinal joint when concrete on ramp shoulder is less than 3'-0".
5. Place joint perpendicular to ramp longitudinal joints. Match location of joint with ramp transverse joints.
6. Place joint perpendicular to ramp longitudinal joints. Match location of joint with mainline transverse joints.
7. Isolation joint detail shown on Standard Plan P18.
8. For jointed plain concrete pavement, transverse joints to be spaced from fixed transverse joint and shall follow spacing pattern on Standard Plan P1. Minimum spacing shall be 6'-0".

TABLE S

LOCATION	TRANSVERSE BAR	LONGITUDINAL BAR
GORE AREA PAVING	#4 @ 1'-0" *	#4 @ 1'-0" *
RAMP TRANSITION (JPCP)	#6 @ 1'-6"	#6 @ 9"
RAMP TRANSITION (CRCP)	#6 @ 4'-0"	SEE STANDARD PLAN P4, TABLE No. 1

* See Note 3

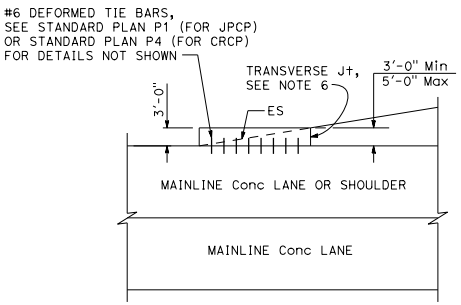

PLAN

ALTERNATE RAMP END DETAIL

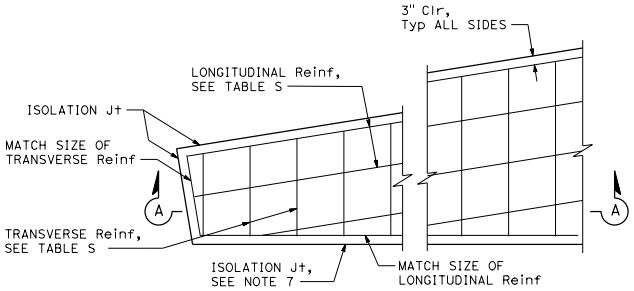

DETAIL A

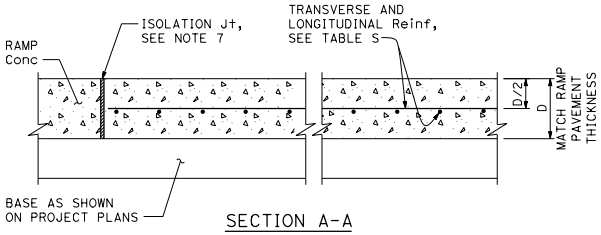

SECTION A-A

STATE OF CALIFORNIA
DEPARTMENT OF TRANSPORTATION

CONCRETE PAVEMENT RAMP TRANSITION PAVING DETAILS

NO SCALE

P35

2026 STANDARD PLAN P35

7-1-26

Return to Table of Contents

Dist	COUNTY	ROUTE	POST MILES TOTAL PROJECT	SHEET No.	TOTAL SHEETS

REGISTERED CIVIL ENGINEER

September 18, 2026
PLANS APPROVAL DATE

REGISTERED PROFESSIONAL ENGINEER Deepak R. Maskey No. C70117 Exp. 9-30-26 CIVIL STATE OF CALIFORNIA

THE STATE OF CALIFORNIA OR ITS OFFICERS OR AGENTS SHALL NOT BE RESPONSIBLE FOR THE ACCURACY OR COMPLETENESS OF SCANNED COPIES OF THIS PLAN SHEET.

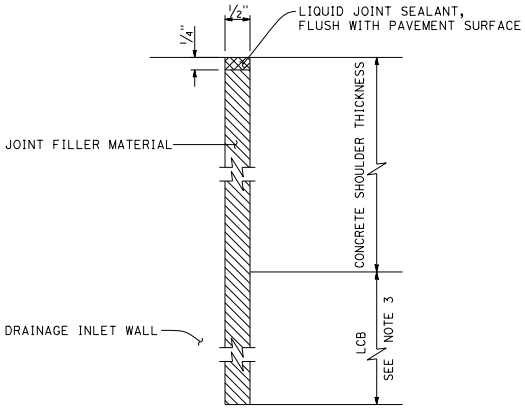

DETAIL A

ISOLATION JOINT AROUND DRAINAGE INLET

TABLE A	
DISTANCE X	BARS REQUIRED
2'-0" TO 1'-6"	2
1'-6" TO 9"	1 @ X/2
9" OR LESS	NONE

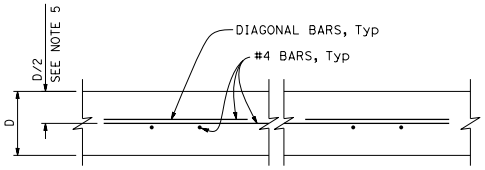

SECTION A-A

D = Pavement Thickness

NOTES:

1. Refer to Project Plans for location and Type of drainage inlets.
2. Top of inlet shall be flush with shoulder surface.
3. Extend joint filler material to bottom of Lean Concrete Base. Where Lean Concrete Base is not used as base material, the joint filler material shall only extend to the bottom of the new concrete pavement.
4. For Jointed Plain Concrete Pavement only. For Continuously Reinforced Concrete Pavement, terminate pavement steel reinforcement 2" clear from all outside edges of isolation joint.
5. For Jointed Plain Concrete Pavement only. For Continuously Reinforced Concrete Pavement, see Standard Plan P4.
6. Dowel and tie bars not shown, see Standard Plan P1.

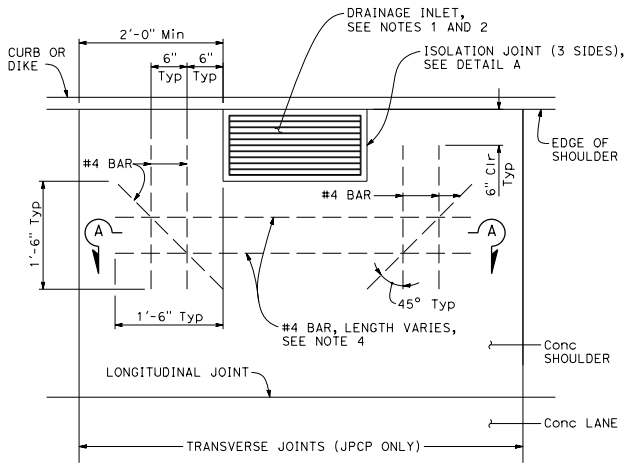

CASE 1

Transverse joint more than 2'-0" clear of drainage inlet wall or no transverse joint.

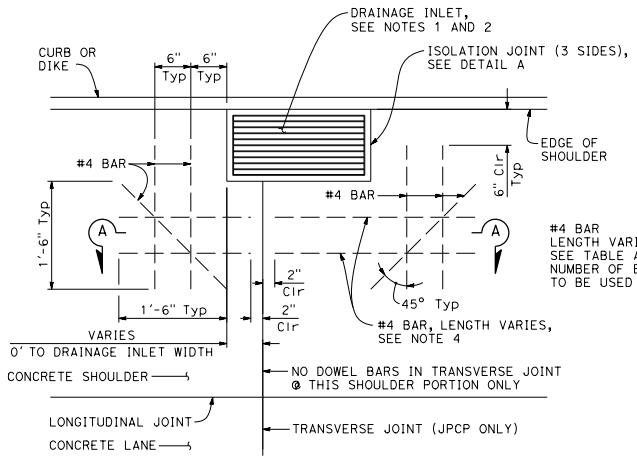

CASE 2

Transverse joint intersects drainage inlet, or matches drainage inlet wall.

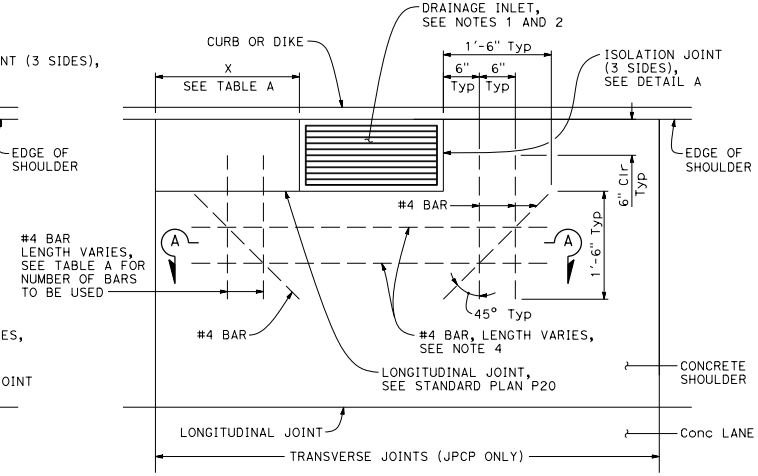

CASE 3

Transverse joint within 2'-0" of drainage inlet wall, or matches drainage inlet wall.

STATE OF CALIFORNIA
DEPARTMENT OF TRANSPORTATION

CONCRETE PAVEMENT DRAINAGE INLET DETAILS No. 1

NO SCALE

P45

2026 STANDARD PLAN P45

7-1-26

Return to Table of Contents

Dist	COUNTY	ROUTE	POST MILES TOTAL PROJECT	SHEET No.	TOTAL SHEETS

REGISTERED CIVIL ENGINEER

September 18, 2026
PLANS APPROVAL DATE

REGISTERED PROFESSIONAL ENGINEER Deepak R. Maskey No. C70117 Exp. 9-30-26 CIVIL STATE OF CALIFORNIA

THE STATE OF CALIFORNIA OR ITS OFFICERS OR AGENTS SHALL NOT BE RESPONSIBLE FOR THE ACCURACY OR COMPLETENESS OF SCANNED COPIES OF THIS PLAN SHEET.

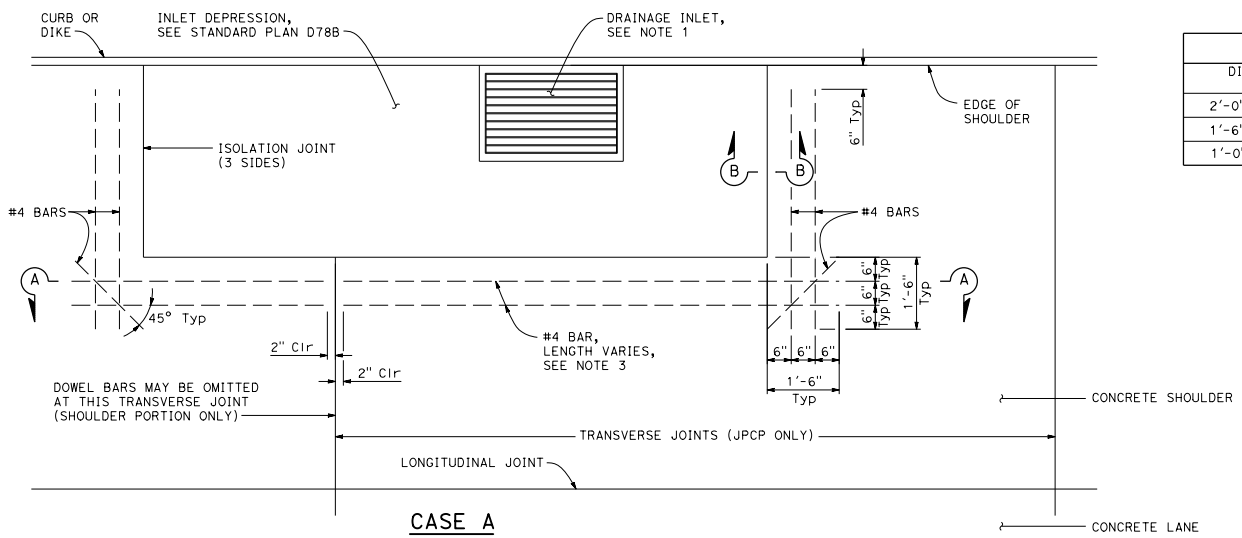

CASE A

Transverse Joint intersects inlet depression or no transverse joints.

TABLE A	
DISTANCE X	BARS REQUIRED
2'-0" TO 1'-6"	2
1'-6" TO 1'-0"	1
1'-0" OR LESS	NONE

NOTES:

1. Refer to Project Plans for location and type of drainage inlets.
2. Extend joint filler material to bottom of Lean Concrete Base. Where Lean Concrete Base is not used as base material, the joint filler material shall only extend to the bottom of the new concrete pavement.
3. For Jointed Plain Concrete Pavement only. For Continuously Reinforced Concrete Pavement, terminate pavement steel reinforcement 2" clear from all outside edges of isolation joint.
4. For Jointed Plain Concrete Pavement only. For Continuously Reinforced Concrete Pavement, see Standard Plan P4.

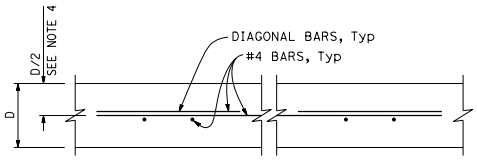

SECTION A-A

D = Pavement Thickness

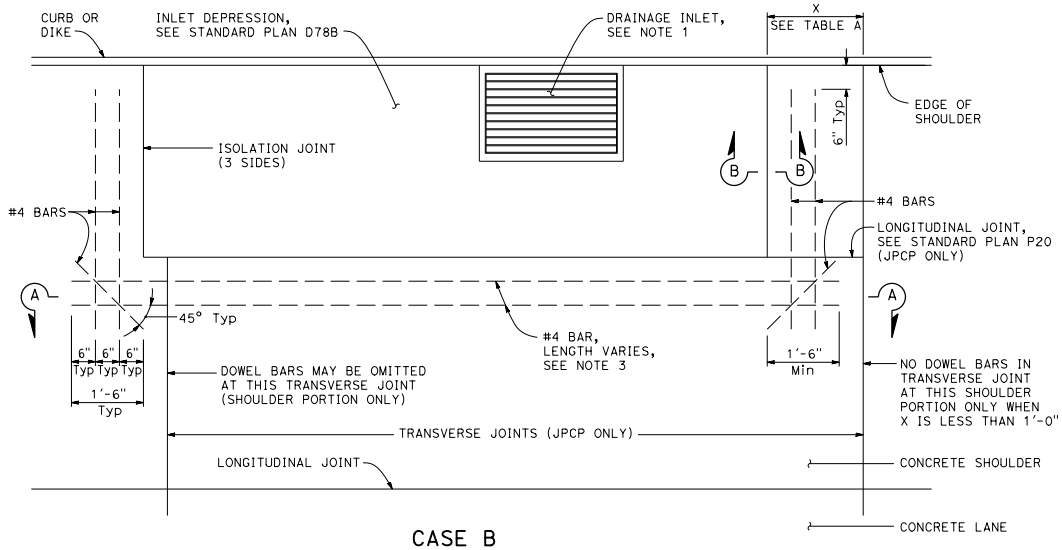

CASE B

Transverse Joint within 2'-0" of edge of inlet depression.

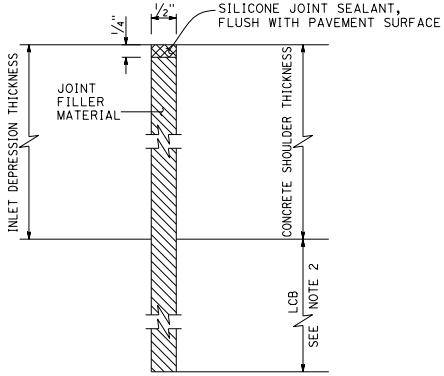

SECTION B-B

ISOLATION JOINT AROUND INLET DEPRESSION

STATE OF CALIFORNIA
DEPARTMENT OF TRANSPORTATION

CONCRETE PAVEMENT DRAINAGE INLET DETAILS No. 2

NO SCALE

P46

7-1-26

Return to Table of Contents

Dist	COUNTY	ROUTE	POST MILES TOTAL PROJECT	SHEET No.	TOTAL SHEETS

REGISTERED CIVIL ENGINEER

September 18, 2026
PLANS APPROVAL DATE

REGISTERED PROFESSIONAL ENGINEER Deepak R. Maskey No. C70117 Exp. 9-30-26 CIVIL STATE OF CALIFORNIA

THE STATE OF CALIFORNIA OR ITS OFFICERS OR AGENTS SHALL NOT BE RESPONSIBLE FOR THE ACCURACY OR COMPLETENESS OF SCANNED COPIES OF THIS PLAN SHEET.

NOTES:

1. At the Contractor's option, on new construction, the vertical jointline (including the filter fabric) between the treated permeable material and the shoulder base/subgrade material may be rotated about its midpoint to a slope not flatter than 1:1 as shown by the dashed lines.
2. See the project plans and typical cross sections for pavement structure details.
3. The plan layout for pavement structure drainage collector and outlet systems for new concrete pavement and new hot mix asphalt pavement is the same as that shown on Standard Plan P51.
4. For plastic pipe edge drain diameter larger than 3", the minimum trench width shall be equal to the outside diameter of the plastic pipe plus 4".
5. For plastic pipe edge drain diameters larger than 3", all details for 3" plastic pipe edge drain shall apply.
6. For pavements thicker than 0.75', the minimum trench depth is 1.0'.

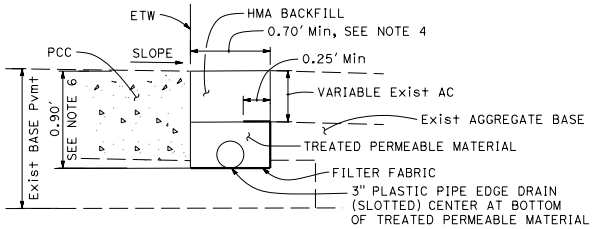

TYPE 1 PAVEMENT STRUCTURE DRAINAGE SYSTEM

For existing highway facility.

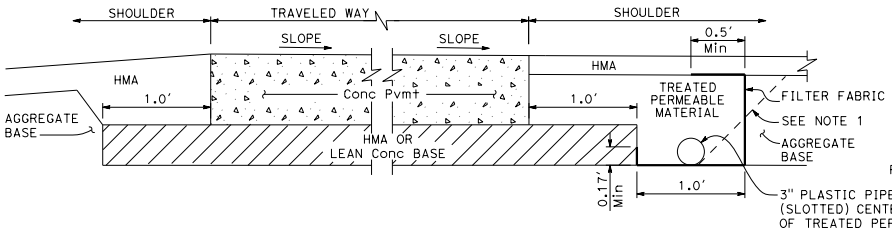

TYPE 2 PAVEMENT STRUCTURE DRAINAGE SYSTEM

New construction

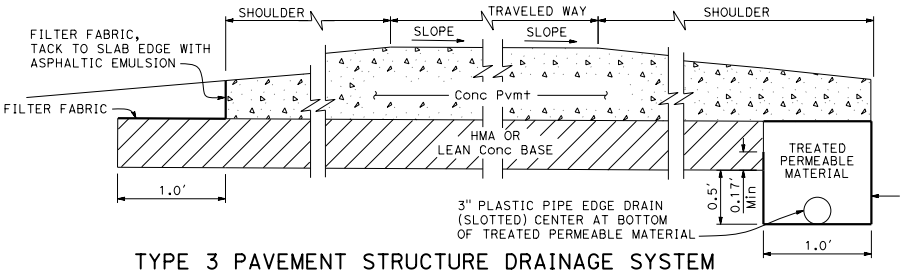

TYPE 3 PAVEMENT STRUCTURE DRAINAGE SYSTEM

New construction

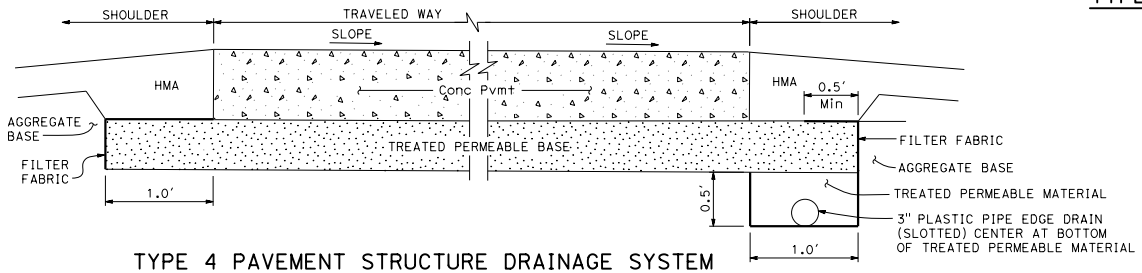

TYPE 4 PAVEMENT STRUCTURE DRAINAGE SYSTEM

New construction

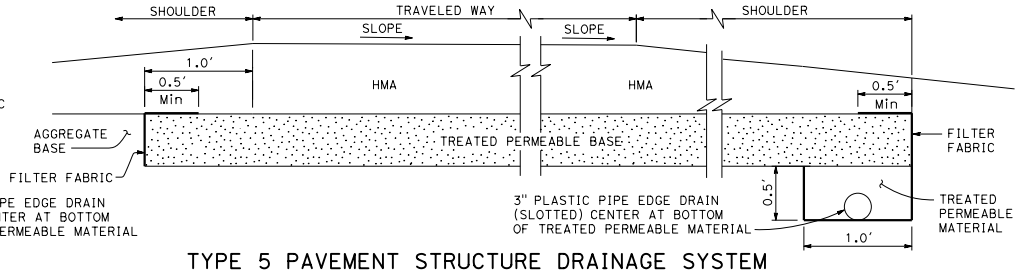

TYPE 5 PAVEMENT STRUCTURE DRAINAGE SYSTEM

New construction

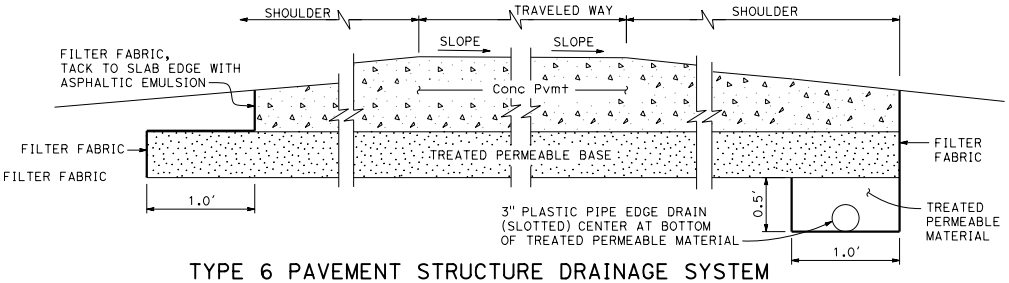

TYPE 6 PAVEMENT STRUCTURE DRAINAGE SYSTEM

New construction

STATE OF CALIFORNIA
DEPARTMENT OF TRANSPORTATION

PAVEMENT STRUCTURE DRAINAGE SYSTEM DETAILS

NO SCALE

P50

7-1-26

2026 STANDARD PLAN P50

Return to Table of Contents

Dist	COUNTY	ROUTE	POST MILES TOTAL PROJECT	SHEET No.	TOTAL SHEETS

REGISTERED CIVIL ENGINEER

September 18, 2026
PLANS APPROVAL DATE

REGISTERED PROFESSIONAL ENGINEER Deepak R. Maskey No. C70117 Exp. 9-30-26 CIVIL STATE OF CALIFORNIA

THE STATE OF CALIFORNIA OR ITS OFFICERS OR AGENTS SHALL NOT BE RESPONSIBLE FOR THE ACCURACY OR COMPLETENESS OF SCANNED COPIES OF THIS PLAN SHEET.

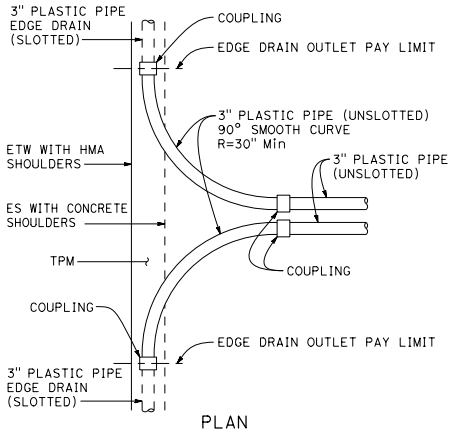

PLAN

DUAL OUTLET AND/OR VENT

See Note 2

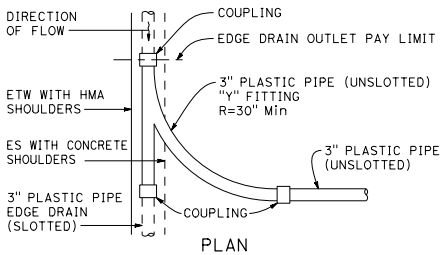

PLAN

INTERMEDIATE OUTLET

See Note 2

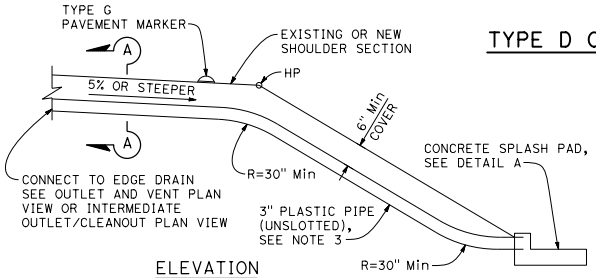

ELEVATION

TYPE A OUTLET

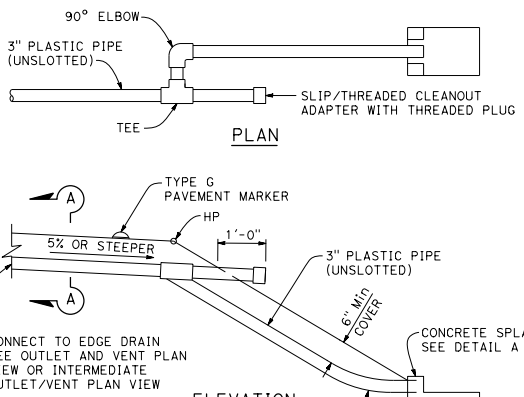

PLAN

ELEVATION

TYPE B OUTLET

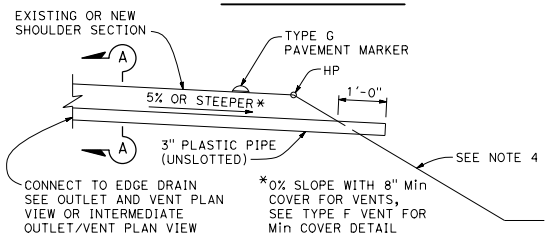

ELEVATION

TYPE C OUTLET AND/OR VENT

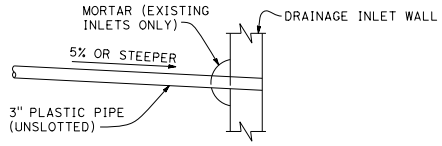

ELEVATION

TYPE D OUTLET CONNECTION TO DRAINAGE INLET

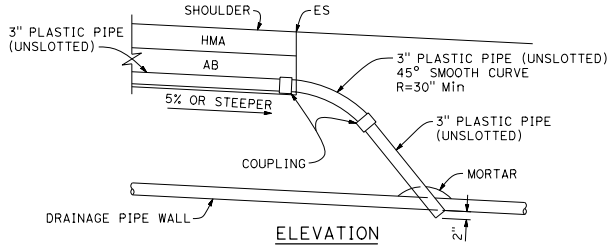

ELEVATION

TYPE E OUTLET CONNECTION TO DRAINAGE PIPE

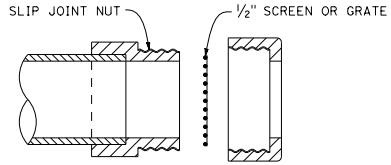

EDGE DRAIN OUTLET AND VENT COVER

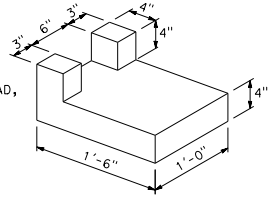

DETAIL A

CONCRETE SPLASH PAD

NOTES:

1. See project plans for location and type of outlet and/or vent installations.
2. The position of slotted plastic pipe and limits of treated permeable material shown are for the Type 1 structural section drainage system shown on Standard Plan P50.
3. The maximum length of plastic pipe outlet shall be 50'-0" measured from the longitudinal centerline of the collector trench to the pipe outlet. For pipe lengths greater than 50'-0" use Type B outlets.
4. See project plans for slope protection details at Type C pipe outlets.
5. Backfill with aggregate base from outside edge paved shoulder to hinge point and backfill with native material in slope area.
6. See Standard Plan P52 for Type G vent detail used with concrete shoulders.

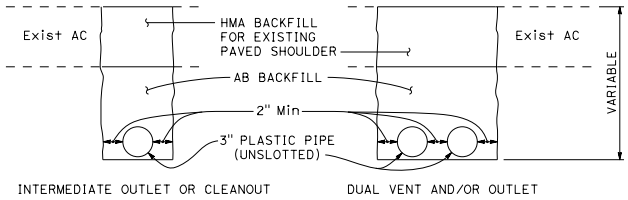

SECTION A-A

OUTLET EXCAVATION AND BACKFILL IN PAVED SHOULDERS

See Note 5

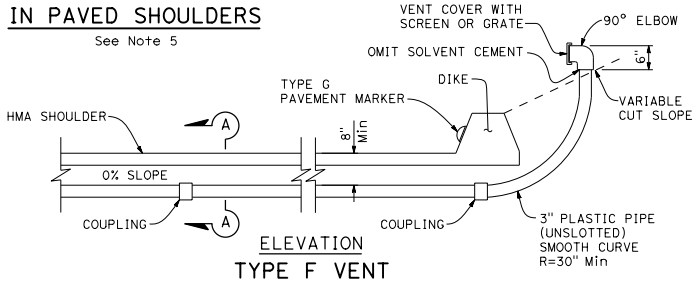

ELEVATION

TYPE F VENT

STATE OF CALIFORNIA
DEPARTMENT OF TRANSPORTATION

EDGE DRAIN OUTLET AND VENT DETAILS

NO SCALE

P51

2026 STANDARD PLAN P51

7-1-26

Return to Table of Contents

Dist	COUNTY	ROUTE	POST MILES TOTAL PROJECT	SHEET No.	TOTAL SHEETS

REGISTERED CIVIL ENGINEER

September 18, 2026
PLANS APPROVAL DATE

REGISTERED PROFESSIONAL ENGINEER Deepak R. Maskey No. C70117 Exp. 9-30-26 CIVIL STATE OF CALIFORNIA

THE STATE OF CALIFORNIA OR ITS OFFICERS OR AGENTS SHALL NOT BE RESPONSIBLE FOR THE ACCURACY OR COMPLETENESS OF SCANNED COPIES OF THIS PLAN SHEET.

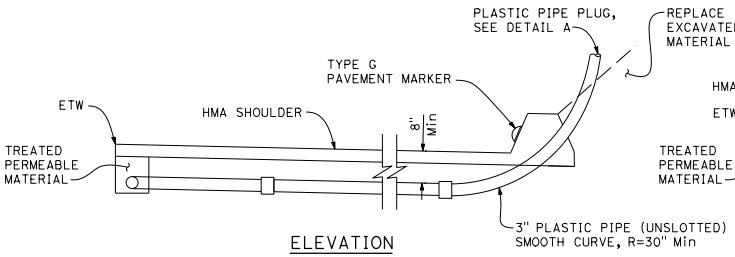

ELEVATION

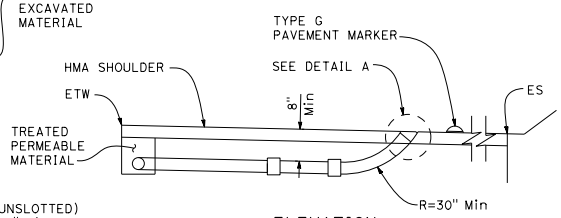

ELEVATION

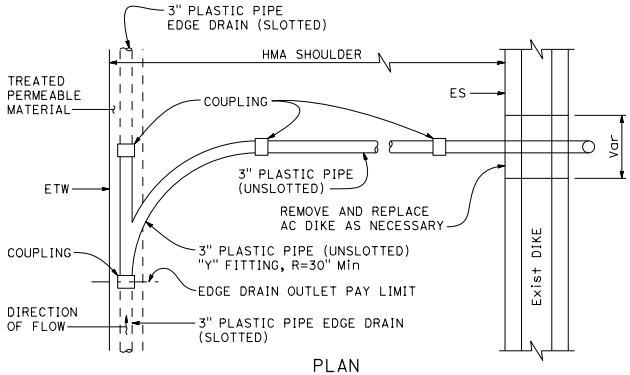

PLAN

TYPE 1 CLEANOUT

See Note 2

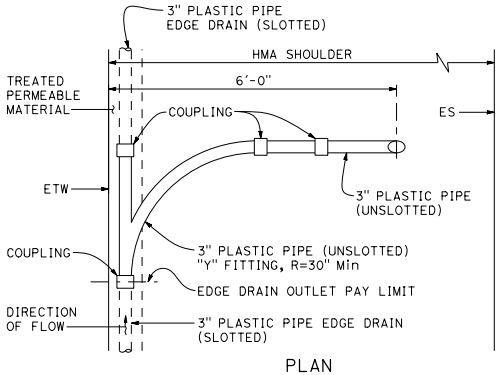

PLAN

TYPE 2 CLEANOUT

See Note 2

NOTES:

1. See project plans for location and type of cleanout or vent installations.
2. The position of slotted plastic pipe and limits of treated permeable material shown are for the Type 1 structural section drainage system shown on Standard Plan P50.
3. Other types of plugs may be substituted with the Engineer's approval.
4. The Type 3 cleanout and Type G vent is for use with concrete shoulders. The Type 6 structural section drainage system from Standard Plan P50 is shown. Use plastic pipe plug shown in Detail A with Type 3 cleanouts. Use vent cover shown on Standard Plan P51 with Type G vents.

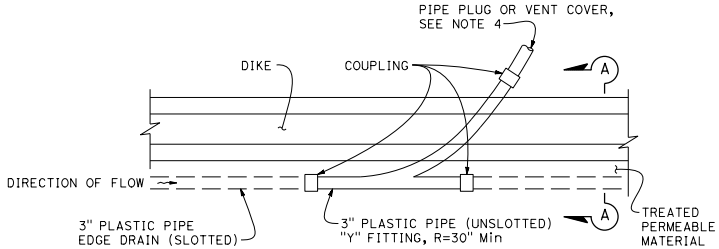

PLAN

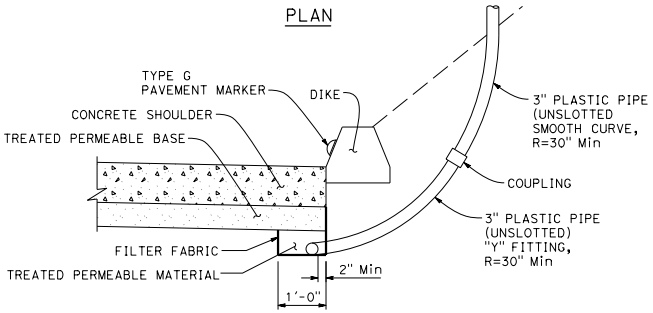

SECTION A-A

TYPE 3 CLEANOUT/TYPE G VENT

See Note 4

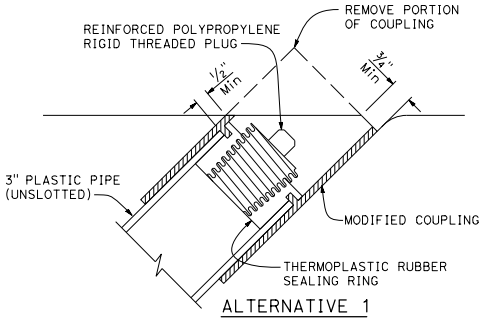

ALTERNATIVE 1

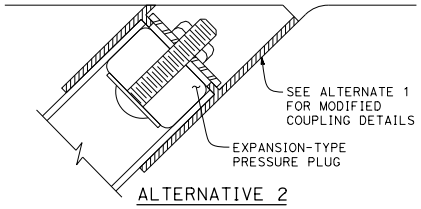

ALTERNATIVE 2

DETAIL A

PLASTIC PIPE PLUG

See Note 3

STATE OF CALIFORNIA
DEPARTMENT OF TRANSPORTATION

EDGE DRAIN CLEANOUT AND VENT DETAILS

NO SCALE

P52

2026 STANDARD PLAN P52

7-1-26

Return to Table of Contents

Dist	COUNTY	ROUTE	POST MILES TOTAL PROJECT	SHEET No.	TOTAL SHEETS

REGISTERED CIVIL ENGINEER

September 18, 2026
PLANS APPROVAL DATE

REGISTERED PROFESSIONAL ENGINEER Deepak R. Maskey No. C70117 Exp. 9-30-26 CIVIL STATE OF CALIFORNIA

THE STATE OF CALIFORNIA OR ITS OFFICERS OR AGENTS SHALL NOT BE RESPONSIBLE FOR THE ACCURACY OR COMPLETENESS OF SCANNED COPIES OF THIS PLAN SHEET.

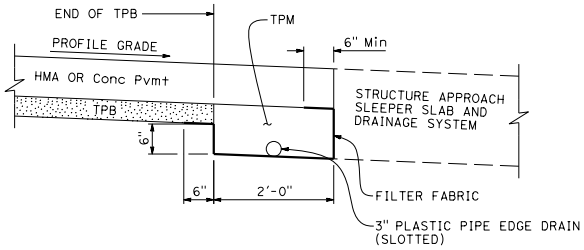

LONGITUDINAL SECTION
CROSS DRAIN INTERCEPTOR AT STRUCTURE APPROACH

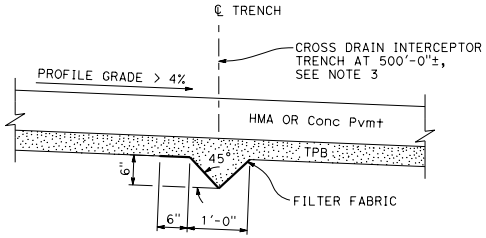

LONGITUDINAL SECTION
INTERMEDIATE CROSS DRAIN INTERCEPTOR

NOTES:

1. Cross drain interceptors are for use with treated permeable bases.
2. See Standard Plan P30 for Pavement End Anchor details. A typical pavement end anchor is shown.
3. The cross drain interceptor trench shall slope to drain. See project plans for location and skew of cross drains.
4. See Standard Plans P51 and P52 for pavement structure drainage system outlet and cleanout details, respectively.

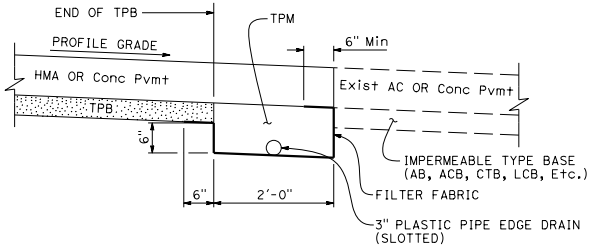

LONGITUDINAL SECTION
TERMINAL CROSS DRAIN INTERCEPTOR

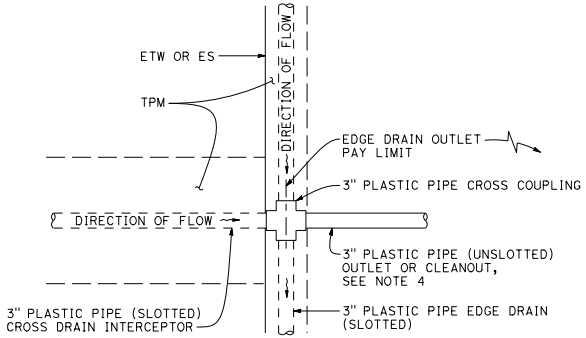

PLAN
CROSS DRAIN INTERCEPTOR OUTLET CONNECTION DETAILS

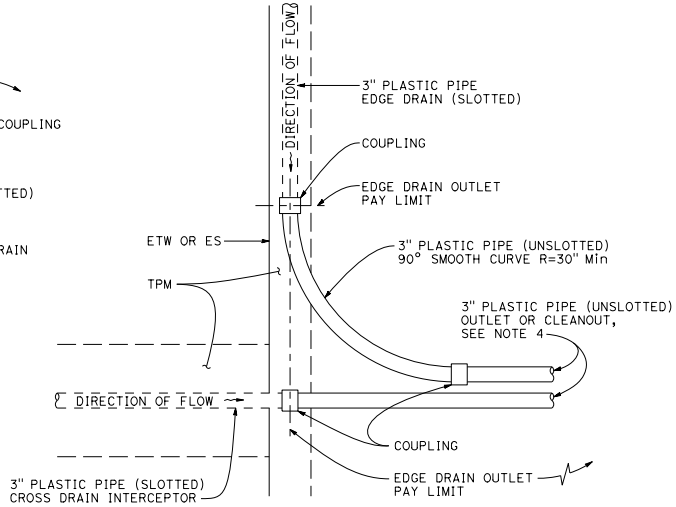

PLAN
COMBINED CROSS DRAIN INTERCEPTOR/EDGE DRAIN OUTLET DETAILS

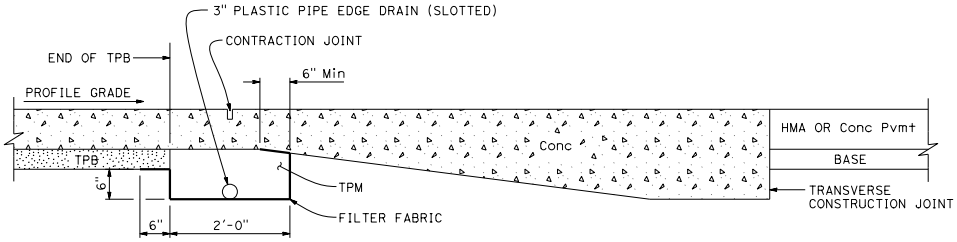

LONGITUDINAL SECTION
CROSS DRAIN INTERCEPTOR AT END ANCHOR

See Note 2

STATE OF CALIFORNIA
DEPARTMENT OF TRANSPORTATION

CROSS DRAIN INTERCEPTOR DETAILS

NO SCALE

P53

2026 STANDARD PLAN P53

7-1-26

Return to Table of Contents

Dist	COUNTY	ROUTE	POST MILES TOTAL PROJECT	SHEET No.	TOTAL SHEETS

REGISTERED CIVIL ENGINEER

September 18, 2026
PLANS APPROVAL DATE

REGISTERED PROFESSIONAL ENGINEER
Dulce Rufino Feldman
No. C81459
Exp. 9-30-27
CIVIL
STATE OF CALIFORNIA

THE STATE OF CALIFORNIA OR ITS OFFICERS OR AGENTS SHALL NOT BE RESPONSIBLE FOR THE ACCURACY OR COMPLETENESS OF SCANNED COPIES OF THIS PLAN SHEET.

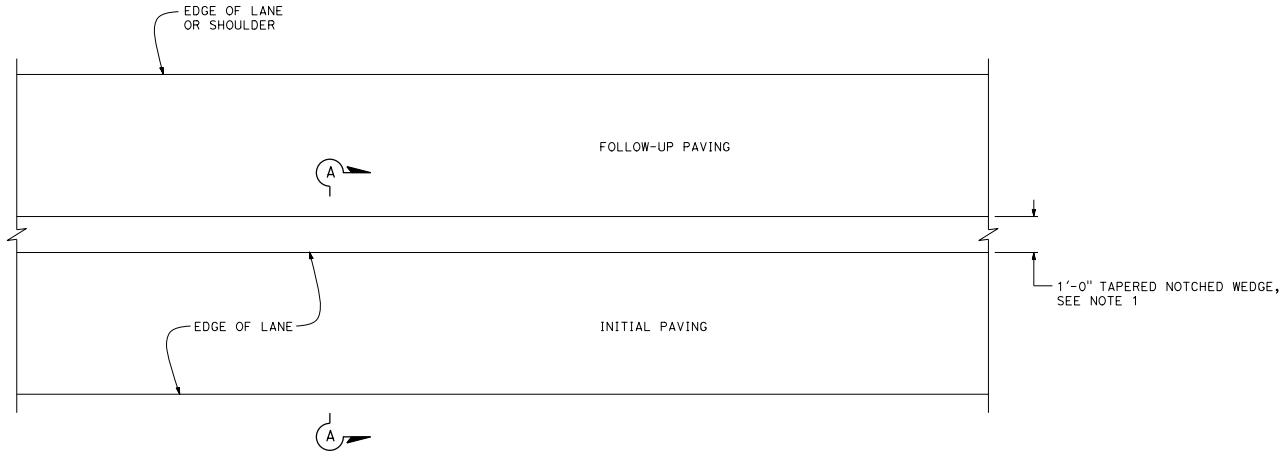

PLAN

DIVIDED MULTILANE HIGHWAY

NOTE:

1. Tapered notch wedge shall extend 1'-0" into adjacent lane or shoulder to receive follow-up paving.

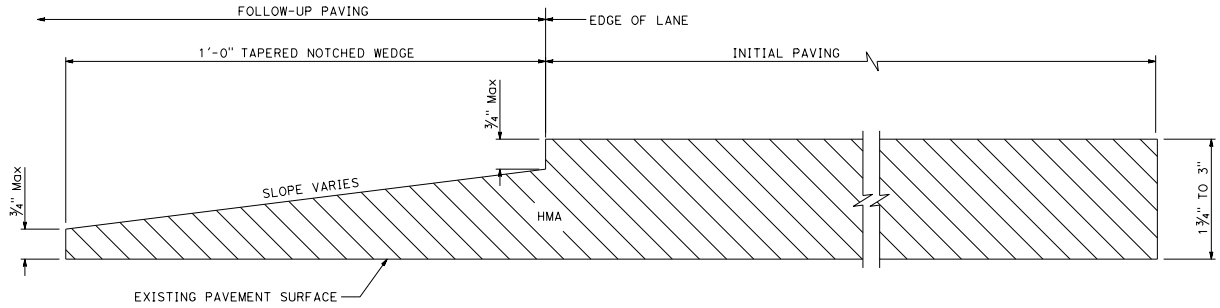

SECTION A-A

LONGITUDINAL TAPERED NOTCHED WEDGE JOINT

STATE OF CALIFORNIA
DEPARTMENT OF TRANSPORTATION

HOT MIX ASPHALT PAVING (LONGITUDINAL TAPERED NOTCHED WEDGE JOINT)

NO SCALE

P70

2026 STANDARD PLAN P70

7-1-26

Return to Table of Contents

Dist	COUNTY	ROUTE	POST MILES TOTAL PROJECT	SHEET No.	TOTAL SHEETS

REGISTERED CIVIL ENGINEER

September 18, 2026

PLANS APPROVAL DATE

REGISTERED PROFESSIONAL ENGINEER Reimond Garcia No. C74873 Exp. 12-31-27 CIVIL STATE OF CALIFORNIA

THE STATE OF CALIFORNIA OR ITS OFFICERS OR AGENTS SHALL NOT BE RESPONSIBLE FOR THE ACCURACY OR COMPLETENESS OF SCANNED COPIES OF THIS PLAN SHEET.

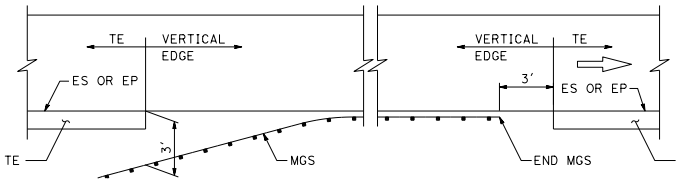

MIDWEST GUARDRAIL SYSTEM

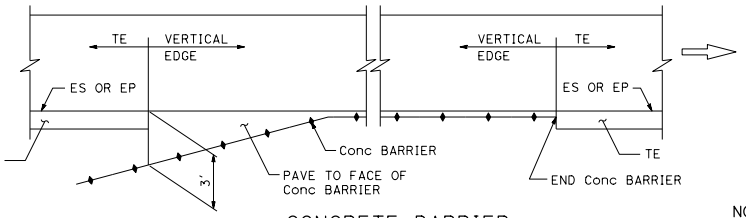

CONCRETE BARRIER

NOTES:

1. For details not shown, see Standard Plans P75 and P76.
2. Tapered edge is optional when L is less than 30'.

ABBREVIATION:

TE - TAPERED EDGE

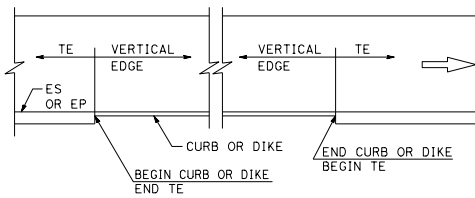

CURB OR DIKE

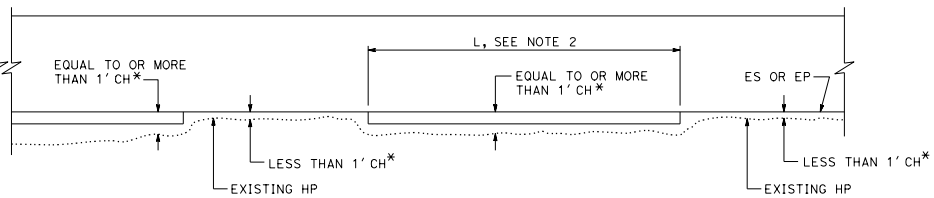

NARROW SIDE SLOPE

CH* = Distance from ES or EP to existing HP

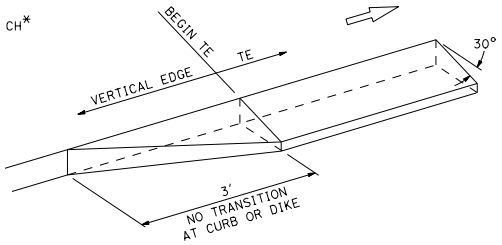

TRANSITION DETAIL FOR CONCRETE ONLY

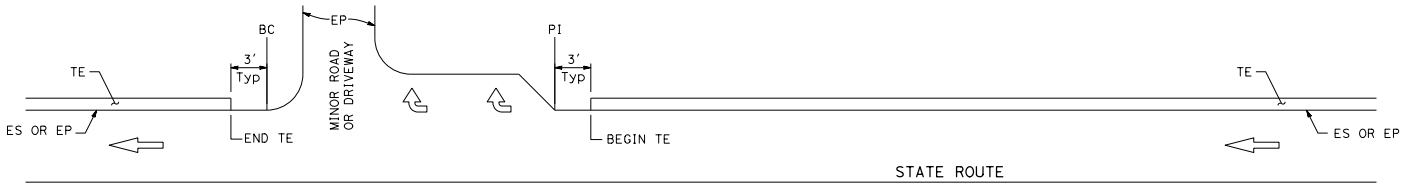

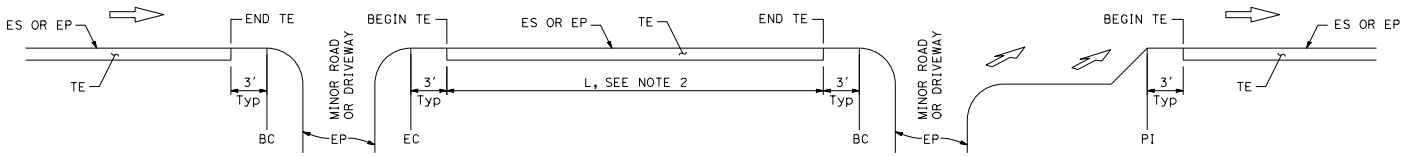

INTERSECTION

MINOR ROADWAY OR DRIVEWAY

DRIVEWAY AND INTERSECTION

STATE OF CALIFORNIA
DEPARTMENT OF TRANSPORTATION

PAVEMENT EDGE TREATMENTS

NO SCALE

P74

2026 STANDARD PLAN P74

7-1-26

Return to Table of Contents

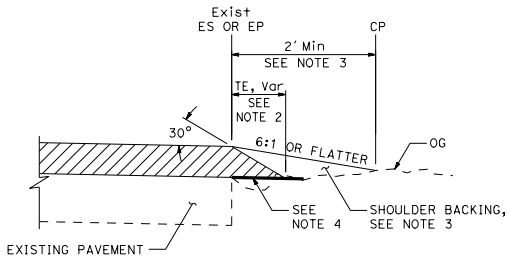

CASE A
Tapered Edge

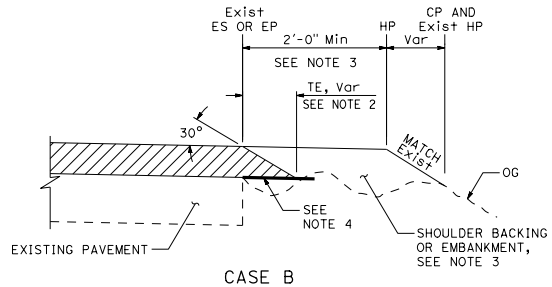

CASE B
Tapered Edge

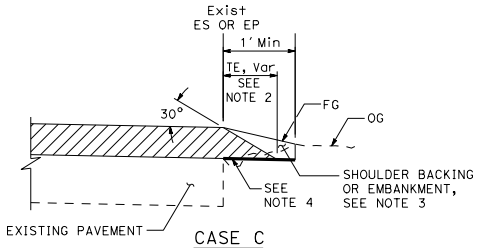

CASE C
Tapered Edge

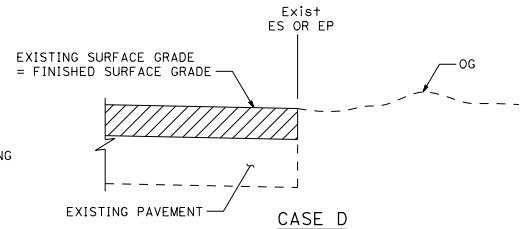

CASE D
Vertical Edge

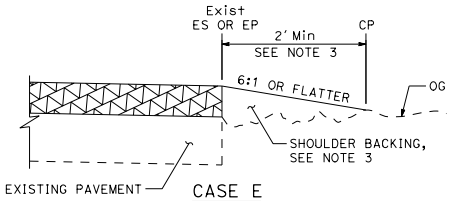

CASE E
Vertical Edge

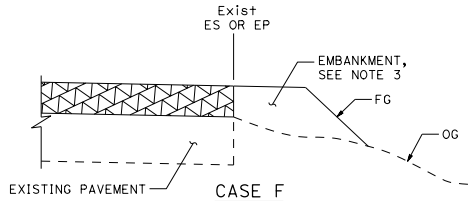

CASE F
Vertical Edge,
* See Table A and Standard Plan P74

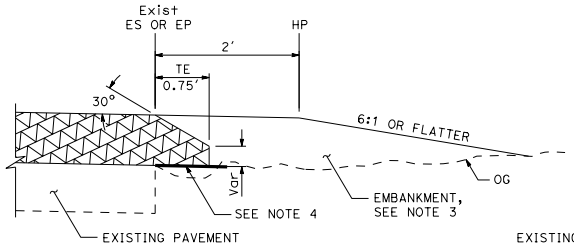

DETAIL A
For HMA overlay thickness more than 0.43' or concrete overlay

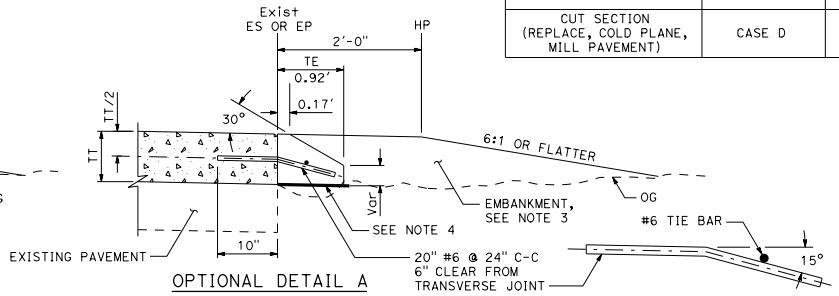

OPTIONAL DETAIL A
For concrete overlay,
see Note 5

LEGEND:

- HMA OVERLAY
- HMA OR CONCRETE OVERLAY
- CONCRETE OVERLAY

NOTES:

1. For limits of tapered edge and vertical edge treatments, see Standard Plan P74.
2. Details shown for HMA overlay thickness less than 0.43'. See Detail A for HMA overlay thickness more than 0.43' or concrete overlay.
3. For locations and limits of shoulder backing or embankment, see project plans.
4. Grade existing ground to place tapered edge, 1' minimum width.
5. Tapered edge transverse joint must match overlay transverse joint. End of #6 tie bar must be 2" ±½" clear from transverse joint.
6. Tapered edge is not needed in the area of MGS, barrier, right turn lane and acceleration lane, see Standard Plan P74.

ABBREVIATIONS:

TE - TAPERED EDGE
TT - TOTAL THICKNESS OF TE

TABLE A
EDGE TREATMENT FOR VARIOUS OVERLAY THICKNESS AND CONDITIONS

FIELD CONDITION	OVERLAY THICKNESS	
	LESS THAN 0.15'	0.15' OR MORE
Exist SLOPE 6:1 OR FLATTER	CASE E	CASE A
Exist SLOPE 3:1 TO 6:1	CASE E	CASE B
Exist SLOPE STEEPER THAN 3:1	CASE F	CASE F
CUT SECTION (REPLACE, COLD PLANE, MILL PAVEMENT)	CASE D	CASE C

ADDITIONAL HMA OR CONCRETE QUANTITIES FOR TE/SIDE/MILE

TYPICAL CROSS SECTION	TT	TOTAL ADDITIONAL MATERIAL FOR TE/SIDE/MILE		
		HMA (TON)	CONCRETE (CY)*	CONCRETE (CY)**
TT	0.15'	7.7	NA	NA
	0.20'	13.7	NA	NA
	0.30'	30.9	NA	NA
	0.40'	54.9	NA	NA
	0.45'	69.4	NA	NA
0.43' TT	0.50'	84.2	NA	NA
	0.60'	113.9	NA	NA
	0.70'	143.6	70.9	94.2
	0.80'	173.3	85.6	112.2
	0.90'	203.0	100.3	130.2
	1.00'	232.7	114.9	148.2
	1.10'	262.4	129.6	166.2
	1.20'	292.1	144.3	184.2

* For Detail A
** For Optional Detail A

Dist	COUNTY	ROUTE	POST MILES TOTAL PROJECT	SHEET No.	TOTAL SHEETS

REGISTERED CIVIL ENGINEER
September 18, 2026
PLANS APPROVAL DATE

REGISTERED PROFESSIONAL ENGINEER
Reimond Garcia
No. C74873
Exp. 12-31-27
CIVIL
STATE OF CALIFORNIA

THE STATE OF CALIFORNIA OR ITS OFFICERS OR AGENTS SHALL NOT BE RESPONSIBLE FOR THE ACCURACY OR COMPLETENESS OF SCANNED COPIES OF THIS PLAN SHEET.

STATE OF CALIFORNIA
DEPARTMENT OF TRANSPORTATION

PAVEMENT EDGE TREATMENTS AND OVERLAYS

NO SCALE

P75

2026 STANDARD PLAN P75

7-1-26

Return to Table of Contents

Dist	COUNTY	ROUTE	POST MILES TOTAL PROJECT	SHEET No.	TOTAL SHEETS

REGISTERED CIVIL ENGINEER

September 18, 2026
PLANS APPROVAL DATE

REGISTERED PROFESSIONAL ENGINEER
Reimond Garcia
No. C74873
Exp. 12-31-27
CIVIL
STATE OF CALIFORNIA

THE STATE OF CALIFORNIA OR ITS OFFICERS OR AGENTS SHALL NOT BE RESPONSIBLE FOR THE ACCURACY OR COMPLETENESS OF SCANNED COPIES OF THIS PLAN SHEET.

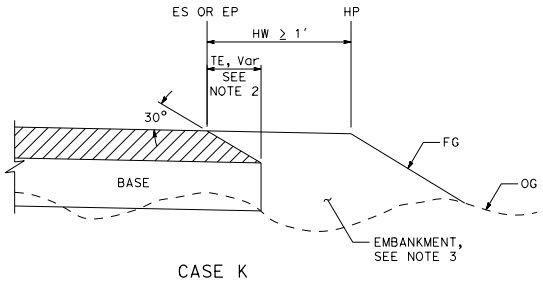

CASE K

Tapered Edge - Fill Section, HW ≥ 1′

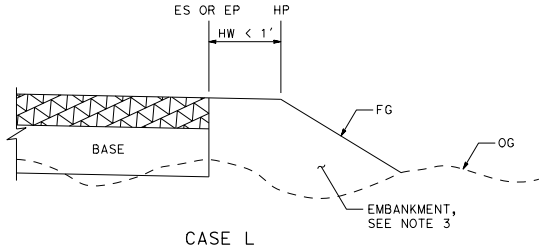

CASE L

Vertical Edge - Fill Section, HW < 1′

FILL SECTION

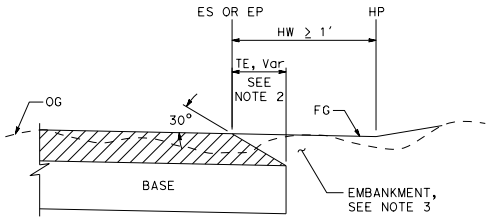

CASE M

Tapered Edge - Cut Section, HW ≥ 1′

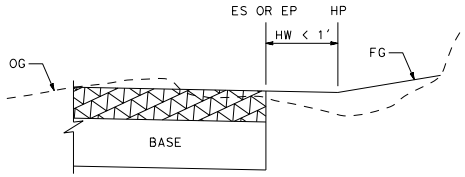

CASE N

Vertical Edge - Cut Section, HW < 1′

CUT SECTION

NOTES:

1. For limits of tapered edge and vertical edge treatments, see Standard Plan P74.
2. Details shown for HMA pavement thickness less than 0.43′. See Detail B for HMA pavement thickness more than 0.43′ or concrete pavement.
3. For locations and limits of embankment, see project plans.
4. Tapered edge transverse joint must match pavement transverse joint. End of #6 tie bar must be 2" ±½" clear from transverse joint.
5. Tapered edge is not needed in the area of MGS, barrier, right turn lane and acceleration lane, see Standard Plan P74.

ABBREVIATIONS:

HW - HINGE WIDTH, DISTANCE FROM ES OR EP TO HP
TE - TAPERED EDGE
TT - TOTAL THICKNESS OF TE

LEGEND:

HMA PAVEMENT
HMA OR CONCRETE PAVEMENT
CONCRETE PAVEMENT

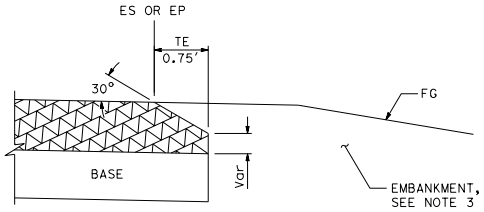

DETAIL B

For HMA pavement thickness more than 0.43′ or concrete pavement.

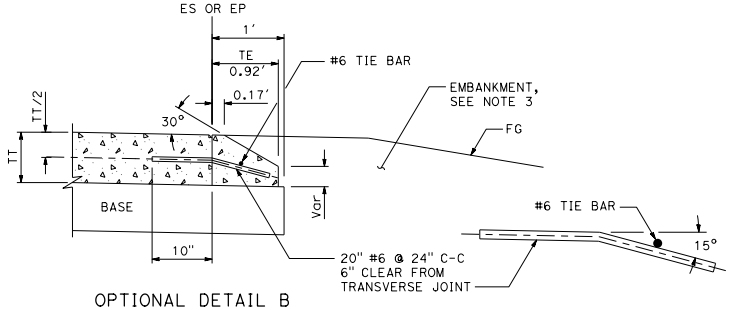

OPTIONAL DETAIL B

For concrete pavement, see Note 4.

STATE OF CALIFORNIA
DEPARTMENT OF TRANSPORTATION

PAVEMENT EDGE TREATMENTS NEW CONSTRUCTION

NO SCALE

P76

2026 STANDARD PLAN P76

7-1-26

Return to Table of Contents

Dist	COUNTY	ROUTE	POST MILES TOTAL PROJECT	SHEET No.	TOTAL SHEETS

REGISTERED CIVIL ENGINEER

September 18, 2026

PLANS APPROVAL DATE

REGISTERED PROFESSIONAL ENGINEER Sean T. Penders No. C63744 Exp. 9-30-26 CIVIL STATE OF CALIFORNIA

THE STATE OF CALIFORNIA OR ITS OFFICERS OR AGENTS SHALL NOT BE RESPONSIBLE FOR THE ACCURACY OR COMPLETENESS OF SCANNED COPIES OF THIS PLAN SHEET.

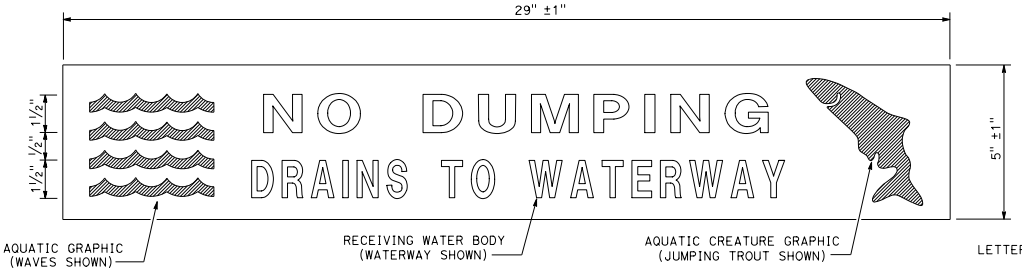

PLAN

DRAINAGE INLET MARKER

(PREFABRICATED THERMOPLASTIC)

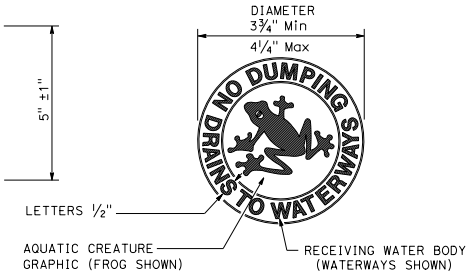

PLAN

DRAINAGE INLET MARKER (MEDALLION)

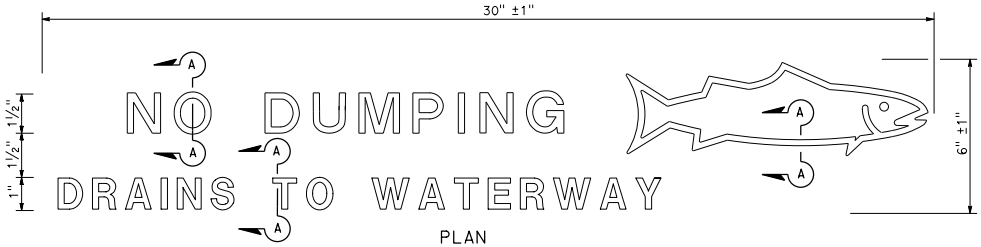

PLAN

DRAINAGE INLET MARKER

(STAMPED CONCRETE IMPRINT)

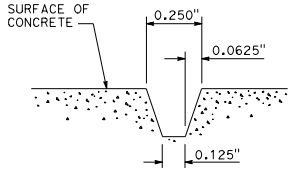

SECTION A-A

STAMPED CONCRETE

IMPRINT DETAIL

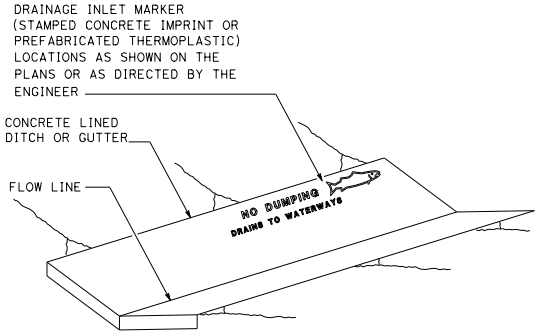

PERSPECTIVE

DRAINAGE INLET MARKER ON

CONCRETE LINED DITCH

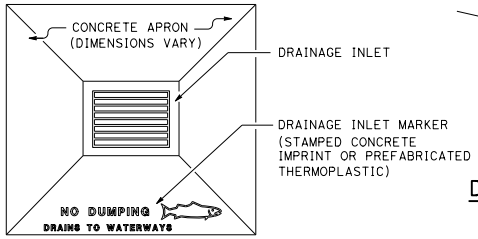

PLAN

DRAINAGE INLET MARKER ON

DRAINAGE INLET APRON

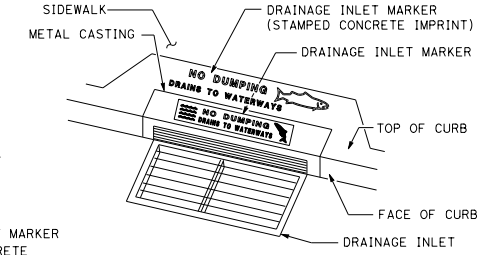

PERSPECTIVE

DRAINAGE INLET MARKER ON

DRAINAGE INLET

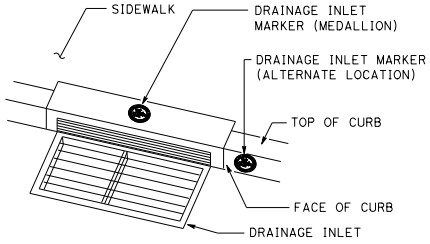

PERSPECTIVE

DRAINAGE INLET MARKER (MEDALLION)

ON DRAINAGE INLET

STATE OF CALIFORNIA
DEPARTMENT OF TRANSPORTATION

DRAINAGE INLET MARKERS

NO SCALE

D71

7-1-26

2026 STANDARD PLAN D71

Return to Table of Contents

Dist	COUNTY	ROUTE	POST MILES TOTAL PROJECT	SHEET No.	TOTAL SHEETS

REGISTERED CIVIL ENGINEER

September 18, 2026
PLANS APPROVAL DATE

Carl M. Duan No. C59976 Exp. 6-30-28 CIVIL STATE OF CALIFORNIA REGISTERED PROFESSIONAL ENGINEER

THE STATE OF CALIFORNIA OR ITS OFFICERS OR AGENTS SHALL NOT BE RESPONSIBLE FOR THE ACCURACY OR COMPLETENESS OF SCANNED COPIES OF THIS PLAN SHEET.

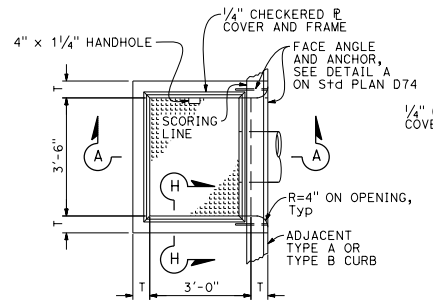

PLAN
TYPE OS

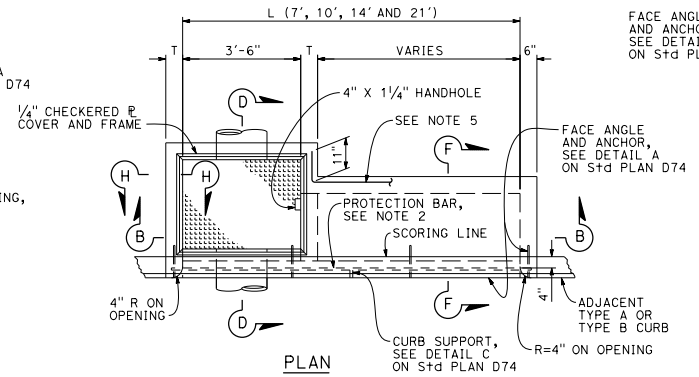

PLAN
TYPE OL

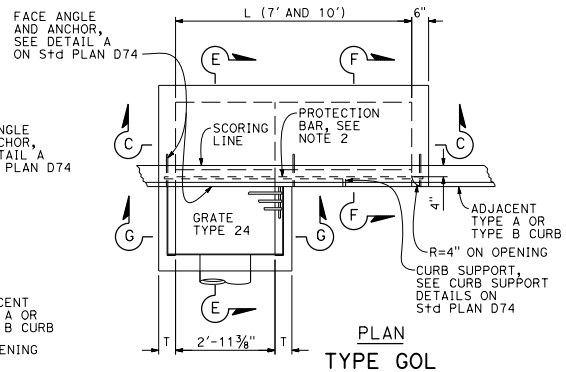

PLAN
TYPE GOL

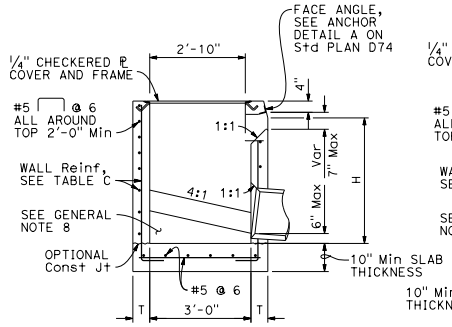

SECTION A-A

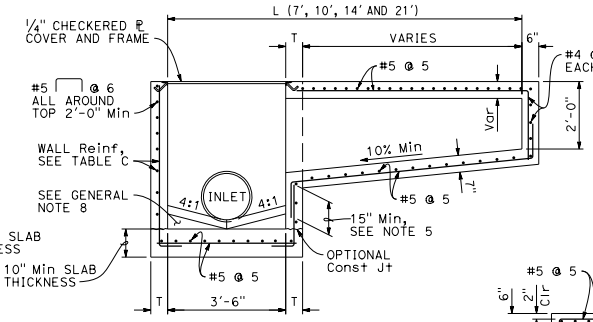

SECTION B-B

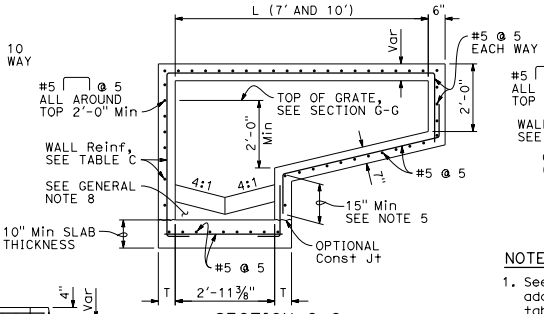

SECTION C-C

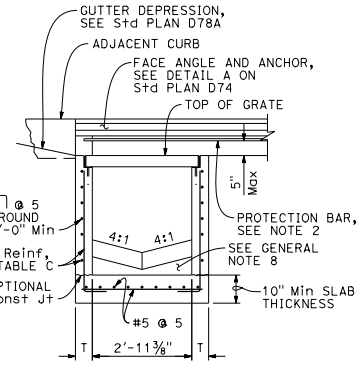

SECTION G-G

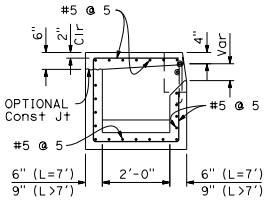

SECTION F-F
(See Note 5)

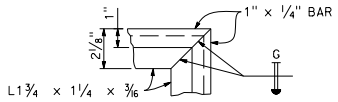

COVER FRAME
Typical each corner
(Checkered ℙ cover not shown)

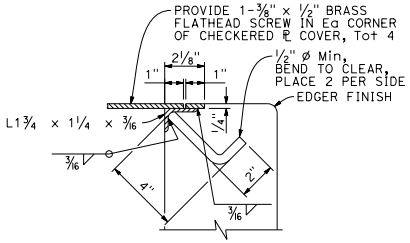

SECTION H-H

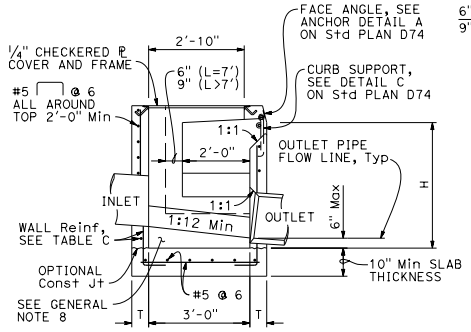

SECTION D-D

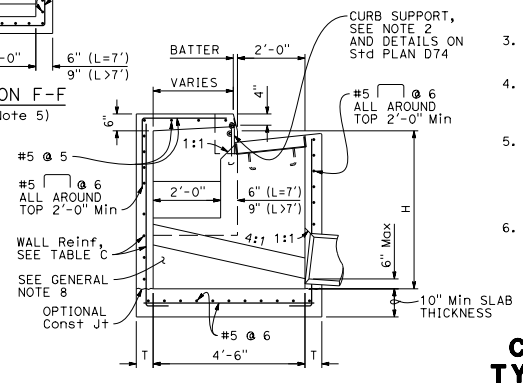

SECTION E-E

NOTES:

1. See Standard Plan D72F for General Notes and additional details. See Standard Plan D72G for tables, wall thickness T and quantities.
2. Where shown on the project plans, place a 3/4" ø plain round protection bar horizontally across the length of the opening and bend back 4" into the inlet wall on each side.
3. Complete joint penetration butt welds may be substituted for the fillet welds on all anchors.
4. Standard square, hexagon, round or equivalent headed anchors may be substituted for the right angle hooks on the anchors shown on this plan.
5. Extend all horizontal bars from inlet extensions into adjacent concrete elements of main inlet box a minimum of 15". Where shown, bend horizontal bars into box. If necessary rotate bars to maintain 2" clear coverage.
6. Height of curb opening will vary with the type of curb and the depth of the local depression.

STATE OF CALIFORNIA
DEPARTMENT OF TRANSPORTATION

CIP DRAINAGE INLETS TYPES OS, OL AND GOL

NO SCALE

D72A

7-1-26

Return to Table of Contents

Dist	COUNTY	ROUTE	POST MILES TOTAL PROJECT	SHEET No.	TOTAL SHEETS

REGISTERED CIVIL ENGINEER

September 18, 2026
PLANS APPROVAL DATE

Carl M. Duan
No. C59976
Exp. 6-30-28
CIVIL
STATE OF CALIFORNIA
REGISTERED PROFESSIONAL ENGINEER

THE STATE OF CALIFORNIA OR ITS OFFICERS OR AGENTS SHALL NOT BE RESPONSIBLE FOR THE ACCURACY OR COMPLETENESS OF SCANNED COPIES OF THIS PLAN SHEET.

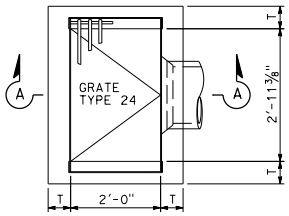

PLAN
TYPE G1

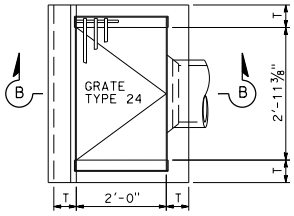

PLAN
TYPE G3

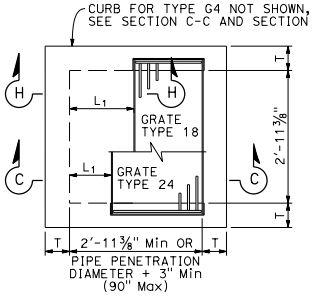

PLAN
STANDARD
TYPE G2 OR G4

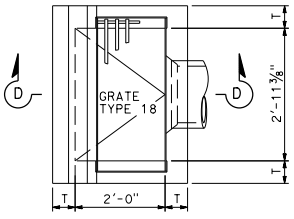

PLAN
TYPE G5

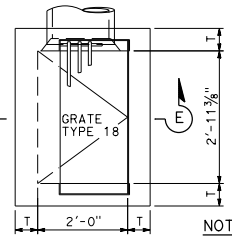

PLAN
TYPE G6

NOTES:

1. For notes and Table 2, see Standard Plan D72C.
2. For L_1 or L_2 greater than 2'-10", see Table 1 for wall thickness dimension and see Table C in Standard Plan D72G for reinforcement. Otherwise, see Table C in Standard Plan D72G for wall thickness and reinforcement.

TABLE 1	
	T
L_1 OR L_2 > 2'-10"	12"

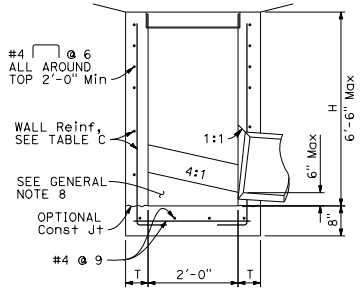

SECTION A-A

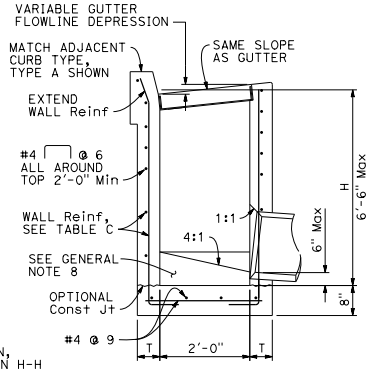

SECTION B-B

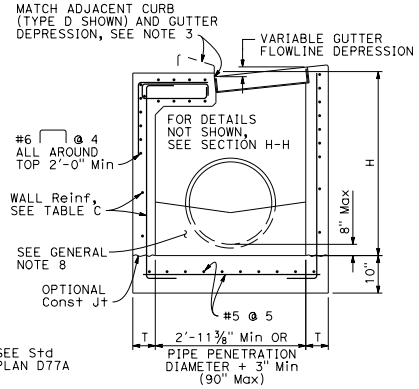

SECTION C-C

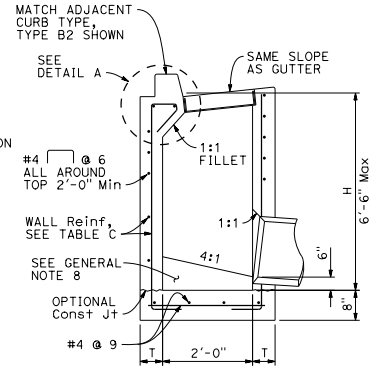

SECTION D-D

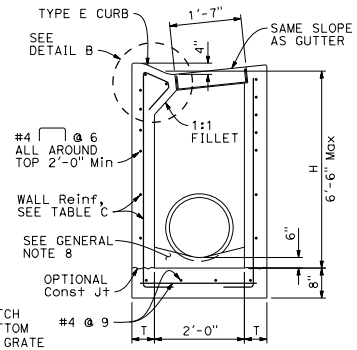

SECTION E-E

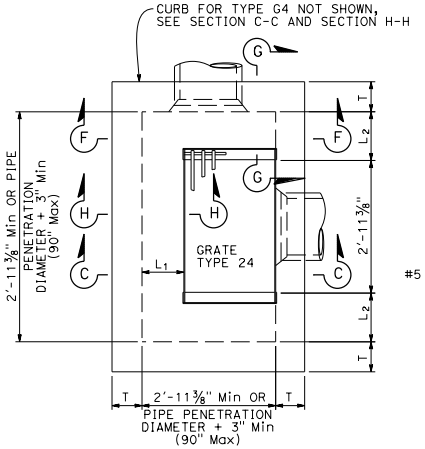

PLAN
EXPANDED
TYPE G2 OR G4

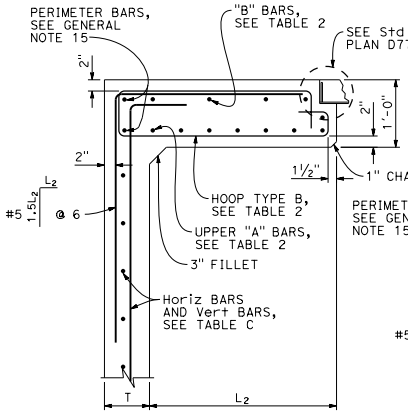

SECTION G-G

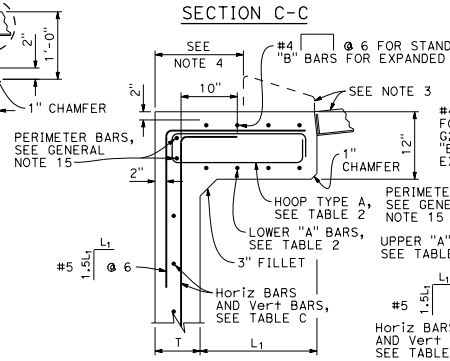

SECTION H-H

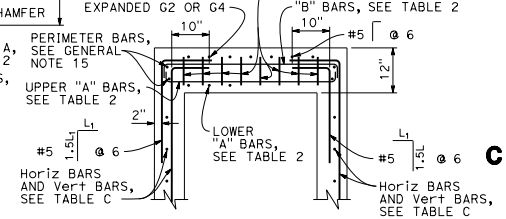

SECTION F-F

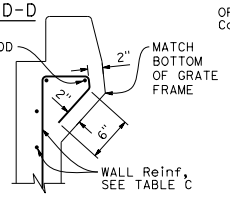

DETAIL A

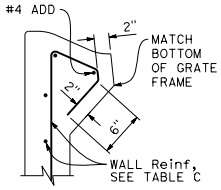

DETAIL B

STATE OF CALIFORNIA
DEPARTMENT OF TRANSPORTATION

CIP DRAINAGE INLETS TYPES G1, G2, G3, G4, G5 AND G6

NO SCALE

D72B

7-1-26

Return to Table of Contents

Dist	COUNTY	ROUTE	POST MILES TOTAL PROJECT	SHEET No.	TOTAL SHEETS

REGISTERED CIVIL ENGINEER

September 18, 2026

PLANS APPROVAL DATE

REGISTERED PROFESSIONAL ENGINEER Carl M. Duan No. C59976 Exp. 6-30-28 CIVIL STATE OF CALIFORNIA

THE STATE OF CALIFORNIA OR ITS OFFICERS OR AGENTS SHALL NOT BE RESPONSIBLE FOR THE ACCURACY OR COMPLETENESS OF SCANNED COPIES OF THIS PLAN SHEET.

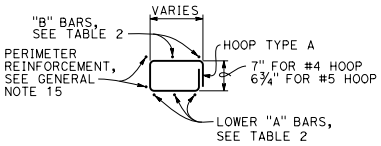

HOOP TYPE A

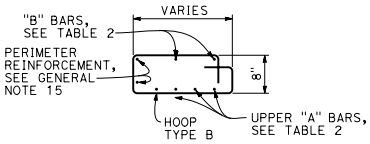

HOOP TYPE B

NOTES:

1. See Standard Plan D72F for General Notes and additional details. See Standard Plan D72G for tables and quantities.
2. Type G4 inlet can use Grate Type 18 or 24. Type G2 inlet uses Grate Type 24.
3. Type G4 inlet details are similar to Type G2 inlet details, except for the addition of a curb and sloped grate to match the adjacent curb and gutter depression.
4. Dimension will vary with different grates, curb types, box width and wall thickness.

TABLE 2 - TOP SLAB REINFORCEMENT

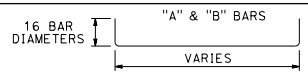

	W/ CURB	W/O CURB
"A" BARS	#4 @ 5 (2 BARS Min)	#5 @ 5 (3 BARS Min)
"B" BARS	#4 @ 10 (2 BARS Min)	#4 @ 12 (2 BARS Min)
HOOPS ("A" & "B")	#4 @ 5	#5 @ 5

ROTATE "A" AND "B" BARS SO HOOKED ENDS WILL MAINTAIN 2" CLEAR COVERAGE.

STATE OF CALIFORNIA
DEPARTMENT OF TRANSPORTATION

CIP DRAINAGE INLETS TYPES G1, G2, G3, G4, G5 AND G6

NO SCALE

D72C

2026 STANDARD PLAN D72C

7-1-26

Return to Table of Contents

Dist	COUNTY	ROUTE	POST MILES TOTAL PROJECT	SHEET No.	TOTAL SHEETS

REGISTERED CIVIL ENGINEER

September 18, 2026
PLANS APPROVAL DATE

REGISTERED PROFESSIONAL ENGINEER Carl M. Duan No. C59976 Exp. 6-30-28 CIVIL STATE OF CALIFORNIA

THE STATE OF CALIFORNIA OR ITS OFFICERS OR AGENTS SHALL NOT BE RESPONSIBLE FOR THE ACCURACY OR COMPLETENESS OF SCANNED COPIES OF THIS PLAN SHEET.

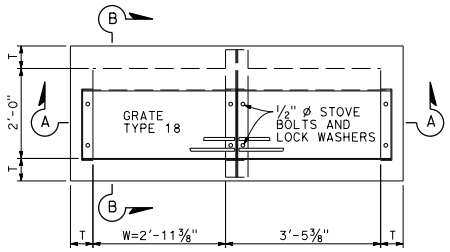

PLAN
TYPE GT1

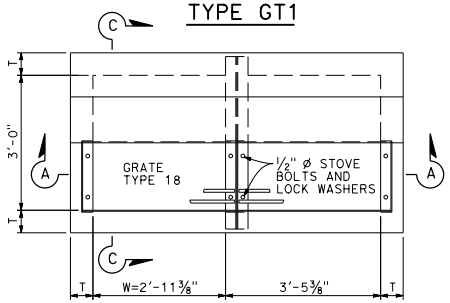

PLAN
TYPE GT2

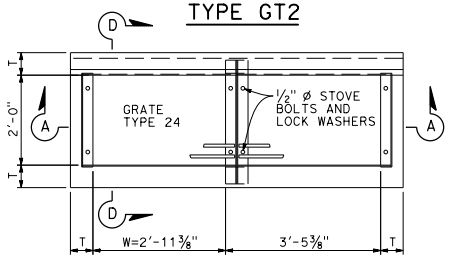

PLAN
TYPE GT3

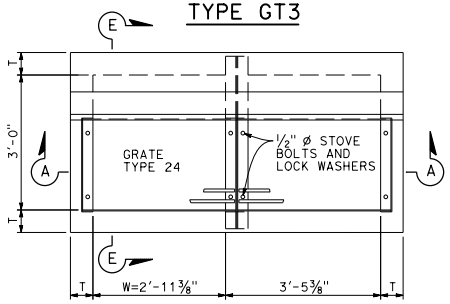

PLAN
TYPE GT4

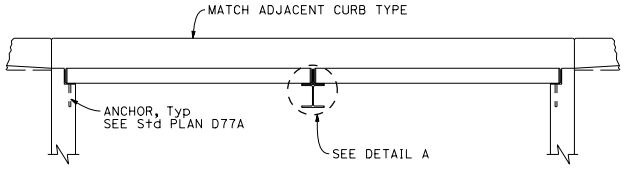

SECTION A-A

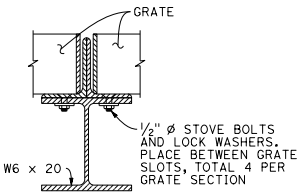

DETAIL A

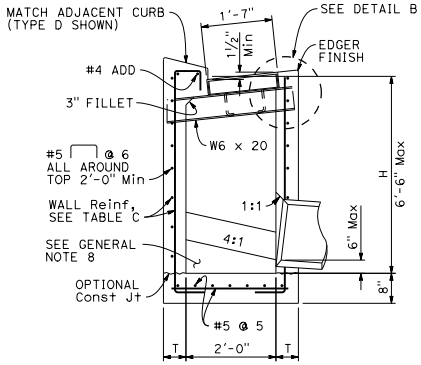

SECTION B-B

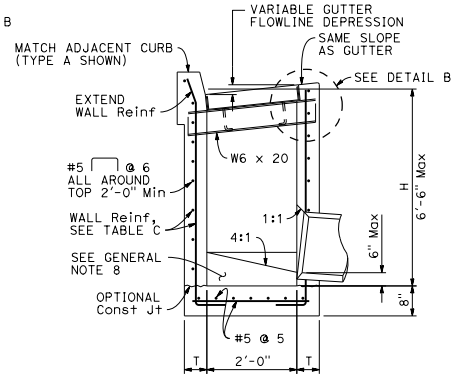

SECTION D-D

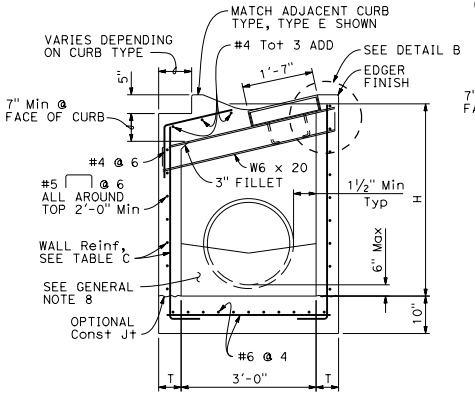

SECTION C-C

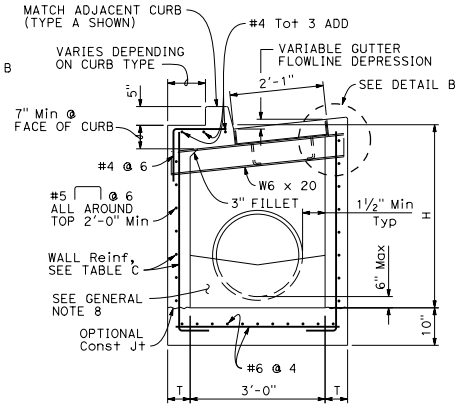

SECTION E-E

NOTES:

1. See Standard Plan D72F for General Notes and additional details. See Standard Plan D72G for tables, wall thickness "T" and quantities.
2. W=2'-11⅜" for one grate. Add 3'-5⅜" for additional grates in tandem.
3. Complete joint penetration butt welds may be substituted for the fillet welds on all anchors.
4. Standard square, hexagon, round or equivalent headed anchors may be substituted for the right angle hooks on the anchors shown on this plan.

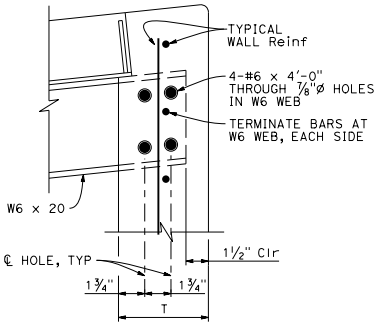

DETAIL B
(Similar opposite end of W6)

STATE OF CALIFORNIA
DEPARTMENT OF TRANSPORTATION

CIP DRAINAGE INLETS TYPES GT1, GT2, GT3 AND GT4

NO SCALE

D72D

7-1-26

Return to Table of Contents

Dist	COUNTY	ROUTE	POST MILES TOTAL PROJECT	SHEET No.	TOTAL SHEETS

REGISTERED CIVIL ENGINEER

September 18, 2026
PLANS APPROVAL DATE

REGISTERED PROFESSIONAL ENGINEER Carl M. Duan No. C59976 Exp. 6-30-28 CIVIL STATE OF CALIFORNIA

THE STATE OF CALIFORNIA OR ITS OFFICERS OR AGENTS SHALL NOT BE RESPONSIBLE FOR THE ACCURACY OR COMPLETENESS OF SCANNED COPIES OF THIS PLAN SHEET.

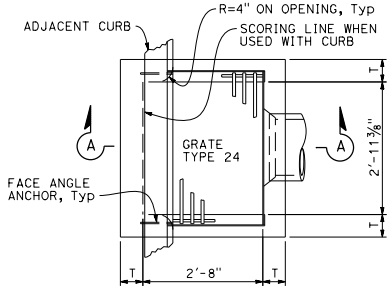

PLAN
TYPE GO

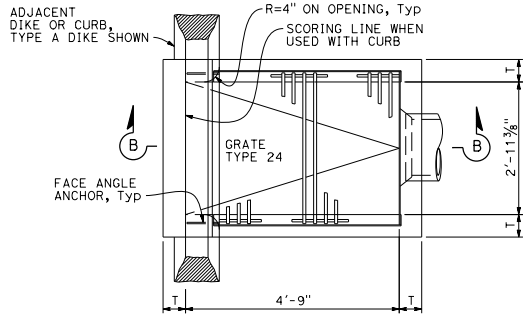

PLAN
TYPE GDO

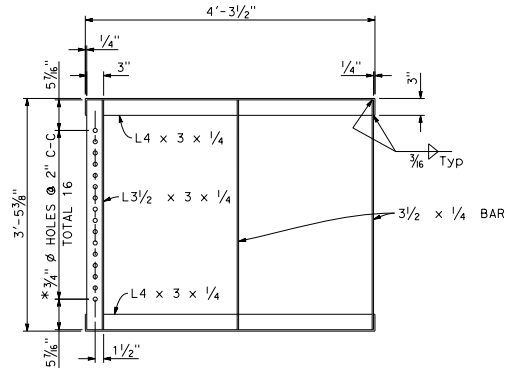

GRATE FRAME FOR TYPE GDO INLET

* HOLES REQUIRED ONLY WITH TRASH RACK

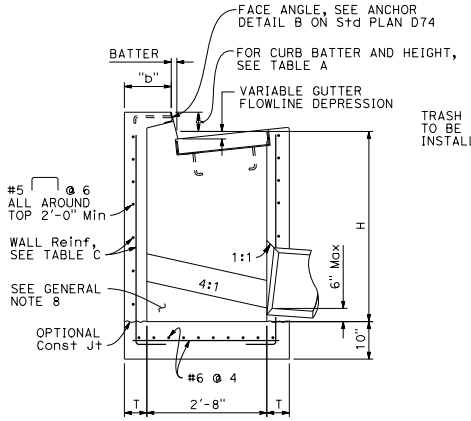

SECTION A-A

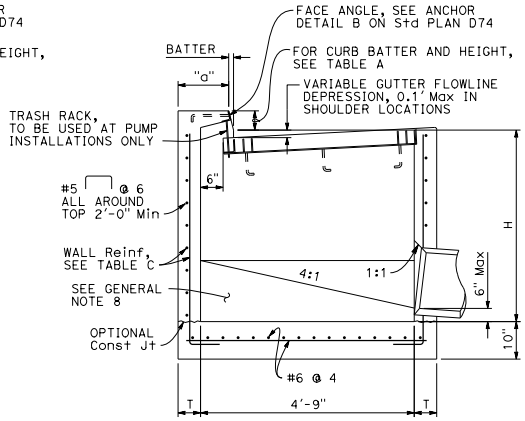

SECTION B-B

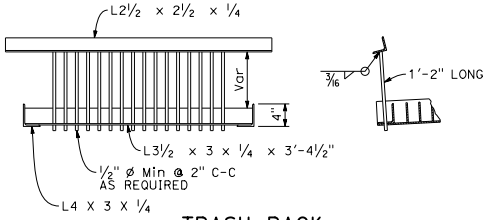

TRASH RACK

(FOR USE WITH PUMP INSTALLATION)

TABLE A				
CURB TYPE	NORMAL CURB HEIGHT	CURB BATTER	"a" DIMENSION	"b" DIMENSION
A1-6	6"	1½"	T+7½"	T+6½"
A1-8	8"	2"	T+7"	T+6"
B1-6	6"	4"	T+5"	T+4"
TYPE A DIKE	6"	3"	T+6"	T+5"

Height of curb opening will vary with the type of curb and the depth of the local depression.

NOTES:

1. See Standard Plan D72F for General Notes and additional details. See Standard Plan D72G for tables, wall thickness "T" and quantities.
2. Where shown on the project plans, place a ¾"ø plain round protection bar horizontally across the length of the opening and bend back 4" into the inlet wall on each side.
3. Complete joint penetration butt welds may be substituted for the fillet welds on all anchors.
4. Standard square, hexagon, round or equivalent headed anchors may be substituted for the right angle hooks on the anchors shown on this plan.

STATE OF CALIFORNIA
DEPARTMENT OF TRANSPORTATION

CIP DRAINAGE INLETS TYPES GO AND GDO

NO SCALE

D72E

2026 STANDARD PLAN D72E

7-1-26

Return to Table of Contents

Dist	COUNTY	ROUTE	POST MILES TOTAL PROJECT	SHEET No.	TOTAL SHEETS

REGISTERED CIVIL ENGINEER

September 18, 2026

PLANS APPROVAL DATE

REGISTERED PROFESSIONAL ENGINEER Carl M. Duan No. C59976 Exp. 6-30-28 CIVIL STATE OF CALIFORNIA

THE STATE OF CALIFORNIA OR ITS OFFICERS OR AGENTS SHALL NOT BE RESPONSIBLE FOR THE ACCURACY OR COMPLETENESS OF SCANNED COPIES OF THIS PLAN SHEET.

GENERAL NOTES:

1. "H" is measured from top of bottom slab to the normal gutter grade line undepressed at the curb face.
2. For "T" wall thickness and reinforcement, see Table C on Standard Plan D72G.
3. Wall reinforcement must be placed in the center of the wall thickness with horizontal bars placed on the exterior face. Bottom slab concrete cover must be 3" clear on the interior face unless otherwise noted. Top slab concrete cover must be 2" clear on the exterior face unless otherwise noted. Reinforcement spacing is in inches unless otherwise noted.
4. Steps - None required where "H" is less than 2'-6". Where "H" is 2'-6" or more, install steps with lowest rung 1'-0" above the floor and highest rung not more than 6" below bottom of lid. The distance between steps must not exceed 1'-0" and be uniform throughout the length of the wall. Place steps in the wall without an opening. Steps inserts may be substituted for the bar steps. Step inserts must comply with State Industrial Safety Requirements. See Standard PlaN D74 for step details.
5. Pipe(s) can be placed in any wall. Adjacent to each side of the opening, place additional reinforcement equivalent to half the interupted main reinforcement. For larger pipes greater than or equal to 42" diameter, also add 4 diagonal bars, 1 bar each side. Bars must be the same size as the larger of the main vertical or horizontal bars. Extend bars one development length past the intersection with the adjacent diagonal bar, or where bars intersect mid thickness of adjacent wall bottom or top of non-continuous wall, bend ends as required into same plane.
6. Set inlet so that grate bars are parallel to direction of principal surface flow.
7. Curb section must match adjacent curb.
8. Except for inlets used as junction boxes, basin floors must have wood trowel finish and a minimum slope of 4:1, unless otherwise noted, from all directions toward outlet pipe by casting grout fill on top of the bottom slab. The additional volume to achieve the 4:1 slope may also be achieved by casting the bottom slab and fill as a composite concrete element.
9. See Standard Plans D77A and D77B for grate and frame details and weights of miscellaneous iron and steel.
10. See Standard Plans D78A and D78B for gutter depression details.
11. See Standard PlanS A87A and A87B for curb and dike details.
12. Details shown apply to metal, concrete and plastic pipe(s).
13. The Contractor may use WWR instead of bar reinforcement. The ratio of bar reinforcement to WWR shall be based on the yield strength ratio.
14. Cast-in-place (CIP) inlets to be formed around all pipes/stubs intersecting the inlet, and concrete poured in one continuous operation.
15. Perimeter reinforcement must not be smaller than main bars and #4 and serves as a rigid frame to position and attach the required structural reinforcement and may be tack welded at outer corners when using ASTM A706 weldable bars.

DESIGN NOTES:

1. Design Specifications: AASHTO LRFD Bridge Design Specifications, 6th edition with 2012 Interims and Errata and CA Amendments.
2. Live Load (AASHTO LRFD 3.6.1.2):
   HL-93, consists of design truck or tandem, and design lane load.
   Dynamic Load Allowance, IM = 33%
   Multiple Presence Factor, m = 1.0
   Design lane load was excluded in Top Slab design.
   A wheel load of 8 kips without impact factor was used for top slabs that are above a curb.
3. Earth Load:
   Vertical pressure = 140 pcf
   Lateral pressure:
   = 100 pcf for walls with flat embankment
   = 140 pcf For walls with slope embankment, 1.5:1 Max
4. Downdrag: ϕ = 34°and γ_E = 120 pcf.
5. Buoyancy: γ_W = 62.4 pcf to finished grade
6. Reinforced Concrete: f'c = 3.6 ksi, fy = 60.0 ksi.
7. Soil pressures shown are factored per AASHTO LRFD and include self-weight, live load and downdrag.

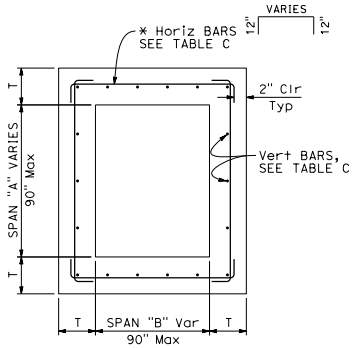

TYPICAL INLET PLAN

* ALTERNATIVE HORIZONTAL BARS

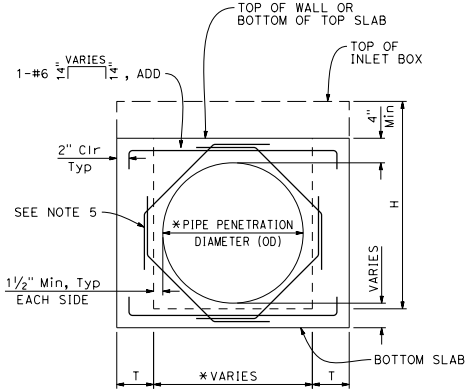

TYPICAL WALL W/ PIPE OPENING

* SEE "SKEWED PIPE PLAN"

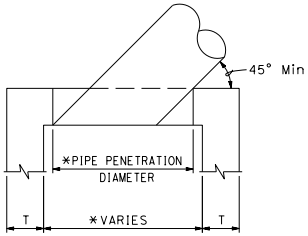

SKEWED PIPE PLAN

* ADJUST PIPE PENETRATION AND BOX WIDTH FOR SKEWED PIPES.

STATE OF CALIFORNIA
DEPARTMENT OF TRANSPORTATION

CIP DRAINAGE INLET NOTES

NO SCALE

D72F

2026 STANDARD PLAN D72F

7-1-26

Return to Table of Contents

Dist	COUNTY	ROUTE	POST MILES TOTAL PROJECT	SHEET No.	TOTAL SHEETS

REGISTERED CIVIL ENGINEER

September 18, 2026

PLANS APPROVAL DATE

REGISTERED PROFESSIONAL ENGINEER Carl M. Duan No. C59976 Exp. 6-30-28 CIVIL STATE OF CALIFORNIA

THE STATE OF CALIFORNIA OR ITS OFFICERS OR AGENTS SHALL NOT BE RESPONSIBLE FOR THE ACCURACY OR COMPLETENESS OF SCANNED COPIES OF THIS PLAN SHEET.

TABLE A - CONCRETE QUANTITIES

TYPE	H=3'-0" TO 8'-0"		H=8'-1" TO 20'-0"	
	H=3'-0" (CY)	ADDITIONAL CONCRETE PER FOOT (CY)	H=8'-1" (CY)	ADDITIONAL CONCRETE PER FOOT (CY)
G1	0.95	0.220	SEE NOTE 2	SEE NOTE 2
G2*	2.00	0.411	5.11	0.525
G3	1.03	0.220	SEE NOTE 2	SEE NOTE 2
G4 (TYPE 18)*	2.02	0.411	5.14	0.525
G4 (TYPE 24)*	1.99	0.411	5.10	0.525
G5	1.02	0.220	SEE NOTE 2	SEE NOTE 2
G6	1.04	0.220	SEE NOTE 2	SEE NOTE 2
OS	1.53	0.278	5.08	0.504
OL7	2.06	0.278	6.17	0.566
OL10	2.85	0.278	6.85	0.566
OL14	3.81	0.278	7.78	0.566
OL21	5.71	0.278	9.62	0.566
GOL7	2.48	0.313	6.89	0.630
GOL10	3.41	0.313	7.85	0.630
GT1	1.72	0.248	SEE NOTE 2	SEE NOTE 2
GT2	2.93	0.530	7.73	0.762
GT3	1.74	0.348	SEE NOTE 2	SEE NOTE 2
GT4	2.83	0.530	7.62	0.762
GO	1.26	0.245	4.90	0.506
GDO	1.74	0.322	6.33	0.647

* Quantities are based on the minimum interior dimensions.

TABLE B - REINFORCEMENT QUANTITIES

TYPE	H=3'-0" TO 8'-0"		H=8'-1" TO 20'-0"	
	H=3'-0" (LB)	ADDITIONAL REINFORCEMENT PER FOOT (LB)	H=8'-1" (LB)	ADDITIONAL REINFORCEMENT PER FOOT (LB)
G1	118	22.20	SEE NOTE 2	SEE NOTE 2
G2*	729	86.48	1794	171.79
G3	118	22.20	SEE NOTE 2	SEE NOTE 2
G4 (TYPE 18)*	647	86.48	1675	171.79
G4 (TYPE 24)*	647	86.48	1675	171.79
G5	118	22.20	SEE NOTE 2	SEE NOTE 2
G6	118	22.20	SEE NOTE 2	SEE NOTE 2
OS	245	49.88	1057	120.77
OL7	458	50.53	1324	126.75
OL10	729	50.53	1595	126.75
OL14	982	50.53	1849	126.75
OL21	1453	50.53	2320	126.75
GOL7	644	83.57	1969	148.79
GOL10	883	83.57	2208	148.79
GT1	486	96.91	SEE NOTE 2	SEE NOTE 2
GT2	1040	117.08	2543	233.37
GT3	486	96.91	SEE NOTE 2	SEE NOTE 2
GT4	1001	117.08	2556	237.88
GO	308	32.44	1013	96.56
GDO	519	57.09	1654	165.66

* Quantities are based on the minimum interior dimensions.

TABLE D

INLET	CURB USED IN QUANTITIES
G1	-
G2	-
G3	A1-6
G4 (Type 18)	A1-6
G4 (Type 24)	A1-6
G5	B1-4
G6	½E
OS	-
OL7	-
OL10	-
OL14	-
OL21	-
GOL7	-
GOL10	-
GT1	D-6
GT2	E
GT3	A2-8
GT4	A2-8
GO	-
GDO	-

NOTES:

1. No deduction or adjustment was made to the quantities of concrete and reinforcement for pipe openings, floor alternatives or curb type.
2. Maximum allowable height is 6'-6".
3. Quantities are approximate and for design purposes only.
4. Design is based on envelope of level and sloped ground.

TABLE C - WALL REINFORCEMENT

TYPE	H≤8 (T=6",UON)		8<H≤20 (T=11",UON)	
	HORIZ	VERTICAL	HORIZ	VERTICAL
OS	#4 @ 8	#4 @ 6	#5 @ 6	#6 @ 4.5
OL	#4 @ 6	#4 @ 6	#5 @ 6	#6 @ 4.5
GOL	#5 @ 6	#5 @ 8	#6 @ 5	#6 @ 4.5
G1 (H≤6-6")	#3 @ 6	#3 @ 6	-	-
G2	T=9" #5 @ 5	#5 @ 5	T=11" #6 @ 4	#6 @ 4.5
G3 (H≤6-6")	#3 @ 6	#3 @ 6	-	-
G4	T=9" #5 @ 5	#5 @ 5	T=11" #6 @ 4	#6 @ 4.5
G5 (H≤6-6")	#3 @ 6	#3 @ 6	-	-
G6 (H≤6-6")	#3 @ 6	#3 @ 6	-	-
GT1 (H≤6-6")	#5 @ 6	#5 @ 6	-	-
GT2	T=8" #5 @ 6	#5 @ 6	#6 @ 4	#6 @ 4.5
GT3 (H≤6-6")	#5 @ 6	#5 @ 6	-	-
GT4	T=8" #5 @ 6	#5 @ 6	#6 @ 4	#6 @ 4.5
GO	#4 @ 9	#4 @ 6	#4 @ 6	#6 @ 4.5
GDO	#4 @ 6	#4 @ 6	#5 @ 4	#6 @ 4.5

TABLE E

SOIL PRESSURE BELOW BASE SLAB (ksf)		
TYPE	H=8'-0"	8'-0"< H ≤20'-0"
OS	2.93	5.56
OL*	2.93	5.56
GOL*	2.50	5.06
G1	3.67	-
G2	2.99	5.91
G3	3.67	-
G4	2.99	5.91
G5	3.67	-
G6	3.67	-
GT1	3.66	-
GT2	3.91	6.07
GT3	3.86	-
GT4	3.91	6.07
GO	3.42	6.11
GDO	2.52	6.95

* Main Box

STATE OF CALIFORNIA
DEPARTMENT OF TRANSPORTATION

CIP DRAINAGE INLET TABLES

D72G

7-1-26

2026 STANDARD PLAN D72G

Return to Table of Contents

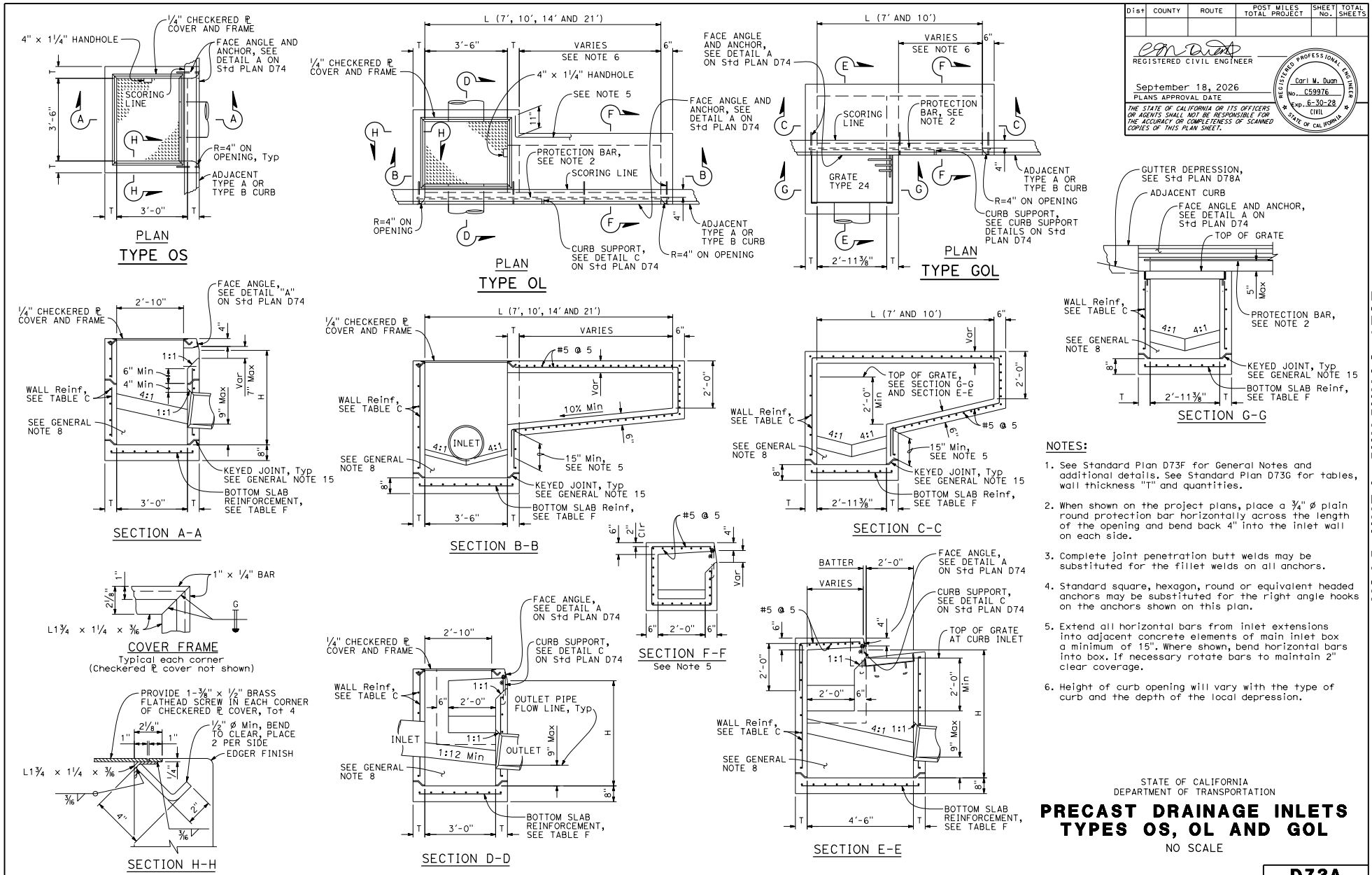

Dist	COUNTY	ROUTE	POST MILES TOTAL PROJECT	SHEET No.	TOTAL SHEETS

REGISTERED CIVIL ENGINEER

September 18, 2026
PLANS APPROVAL DATE

Carl M. Duan
No. C59976
Exp. 6-30-28
CIVIL
STATE OF CALIFORNIA
REGISTERED PROFESSIONAL ENGINEER

THE STATE OF CALIFORNIA OR ITS OFFICERS OR AGENTS SHALL NOT BE RESPONSIBLE FOR THE ACCURACY OR COMPLETENESS OF SCANNED COPIES OF THIS PLAN SHEET.

NOTES:

1. See Standard Plan D73F for General Notes and additional details. See Standard Plan D73G for tables, wall thickness "T" and quantities.
2. When shown on the project plans, place a ¾" ø plain round protection bar horizontally across the length of the opening and bend back 4" into the inlet wall on each side.
3. Complete joint penetration butt welds may be substituted for the fillet welds on all anchors.
4. Standard square, hexagon, round or equivalent headed anchors may be substituted for the right angle hooks on the anchors shown on this plan.
5. Extend all horizontal bars from inlet extensions into adjacent concrete elements of main inlet box a minimum of 15". Where shown, bend horizontal bars into box. If necessary rotate bars to maintain 2" clear coverage.
6. Height of curb opening will vary with the type of curb and the depth of the local depression.

STATE OF CALIFORNIA
DEPARTMENT OF TRANSPORTATION

PRECAST DRAINAGE INLETS TYPES OS, OL AND GOL

NO SCALE

D73A

2026 STANDARD PLAN D73A

7-1-26

Return to Table of Contents

Dist	COUNTY	ROUTE	POST MILES TOTAL PROJECT	SHEET No.	TOTAL SHEETS

REGISTERED CIVIL ENGINEER

September 18, 2026
PLANS APPROVAL DATE

Carl M. Duan
No. C59976
Exp. 6-30-28
CIVIL
STATE OF CALIFORNIA
REGISTERED PROFESSIONAL ENGINEER

THE STATE OF CALIFORNIA OR ITS OFFICERS OR AGENTS SHALL NOT BE RESPONSIBLE FOR THE ACCURACY OR COMPLETENESS OF SCANNED COPIES OF THIS PLAN SHEET.

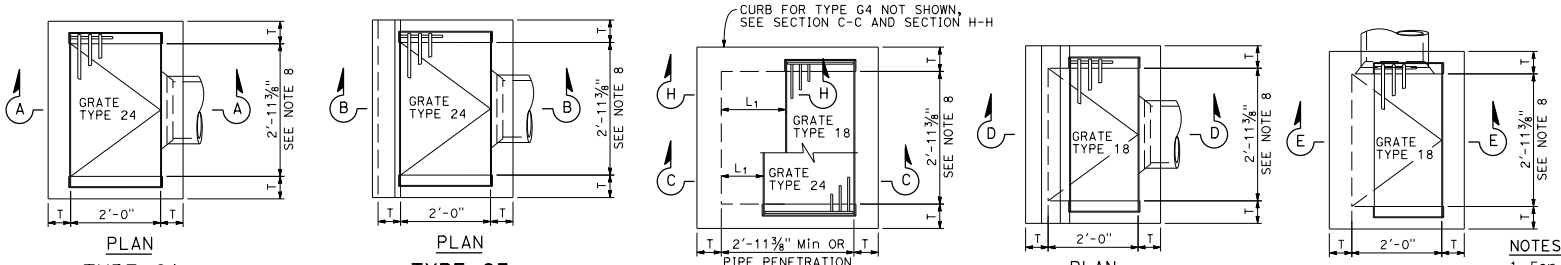

NOTES:

1. For notes and Table 2, see Standard Plan D73C.
2. For L_1 or L_2 greater than 2'-10", see Table 1 for wall thickness dimension and see Table C in Standard Plan D73G for reinforcement. Otherwise, see Table C in Standard Plan D73G for wall thickness and reinforcement.

TABLE 1	
	T
L_1 OR L_2 > 2'-10"	12"

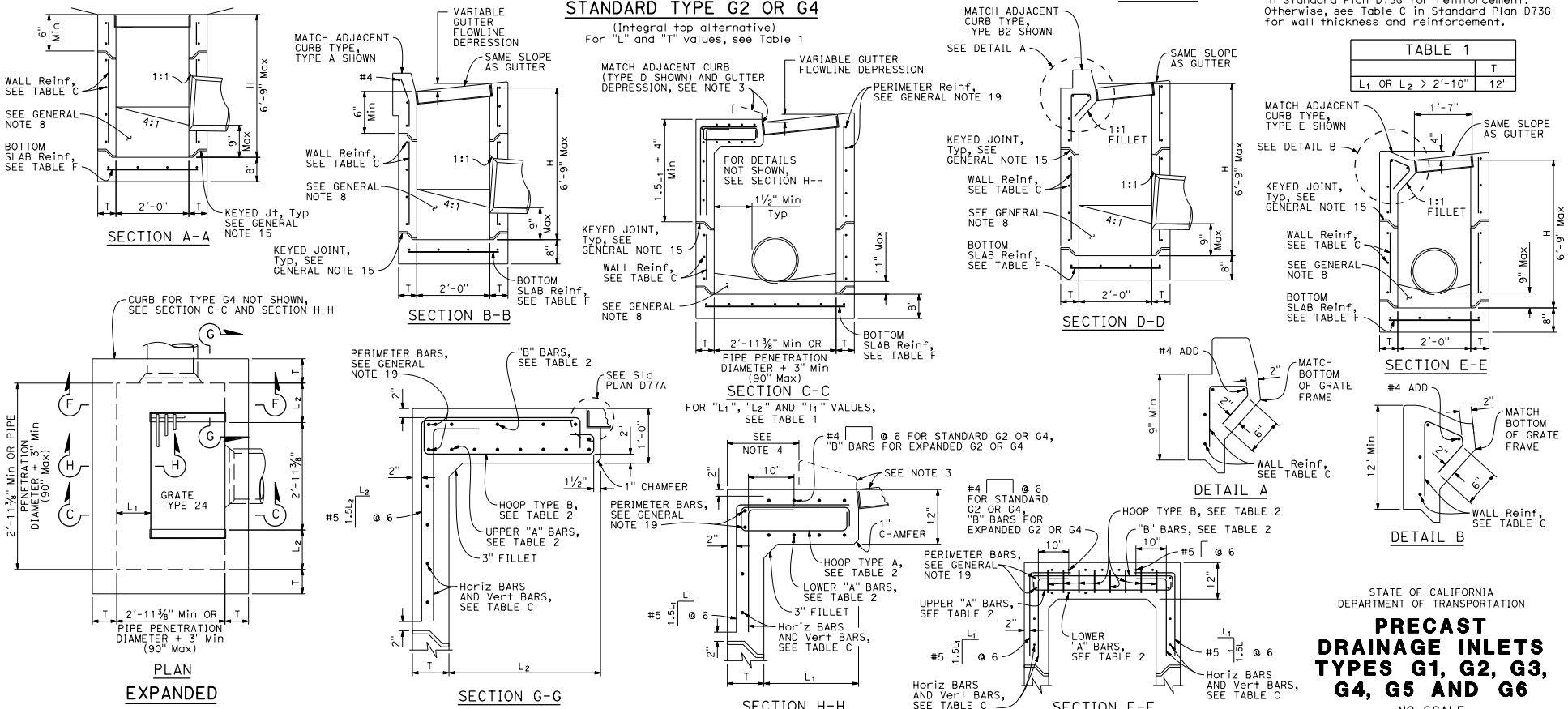

STATE OF CALIFORNIA
DEPARTMENT OF TRANSPORTATION

PRECAST DRAINAGE INLETS TYPES G1, G2, G3, G4, G5 AND G6

NO SCALE

D73B

2026 STANDARD PLAN D73B

7-1-26

Return to Table of Contents

Dist	COUNTY	ROUTE	POST MILES TOTAL PROJECT	SHEET No.	TOTAL SHEETS

REGISTERED CIVIL ENGINEER

September 18, 2026

PLANS APPROVAL DATE

REGISTERED PROFESSIONAL ENGINEER Carl M. Duan No. C59976 Exp. 6-30-28 CIVIL STATE OF CALIFORNIA

THE STATE OF CALIFORNIA OR ITS OFFICERS OR AGENTS SHALL NOT BE RESPONSIBLE FOR THE ACCURACY OR COMPLETENESS OF SCANNED COPIES OF THIS PLAN SHEET.

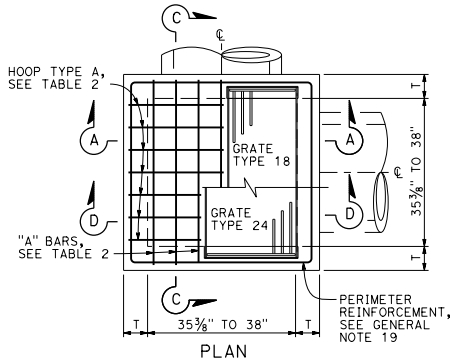

PLAN

STANDARD TYPE G2 OR G4

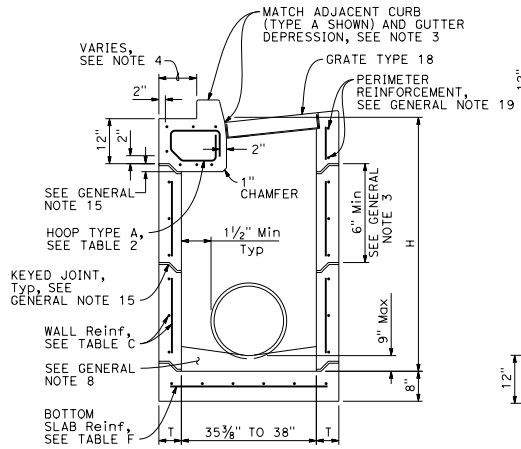

SECTION A-A

(With G4 Top)

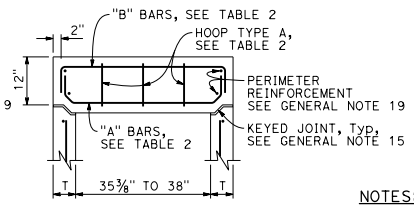

SECTION C-C

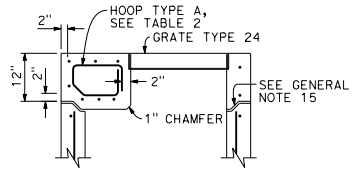

SECTION D-D

(With G2 Top)

NOTES:

1. See Standard Plan D73F for General Notes and additional details. See Standard Plan D73G for additional tables, wall thickness "T" and quantities.
2. Type G4 inlet can use Grate Type 18 or 24. Type G2 inlet uses Grate Type 24.
3. G4 inlet details are the same as the G2 with the addition of a curb and sloped grate that matches the adjacent curb and gutter depression.
4. Dimension will vary with different grates, curb types, box width and wall thickness.
5. 2" unless inlet is expanded in the Span "A" direction, then clearance is 2" plus the diameter of the lower "A" bar.
6. See Standard Plan D73B for integral top slab alternative.
7. Interior dimension of lower sections of inlet for Types G2 and G4 may be 3'-0" provided top section conforms to the requirements for frame and grate types on Standard Plan D77A. The wall thickness of top sections may transition from "T" to "T"+5/16" to meet this requirement. Minimum height of thickened wall shall = "T".

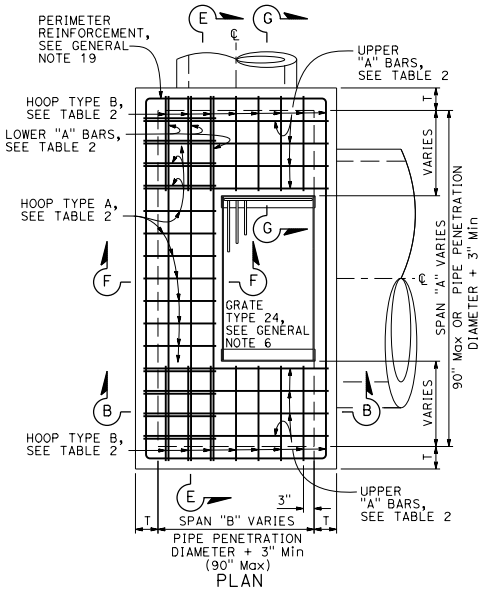

PLAN

EXPANDED

TYPE G2 OR G4

(Top rebar not shown)

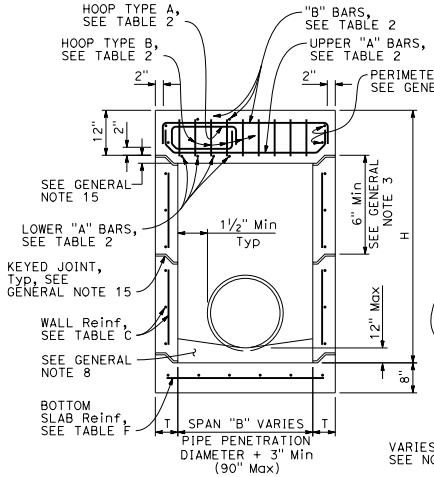

SECTION B-B

(With G2 Top)

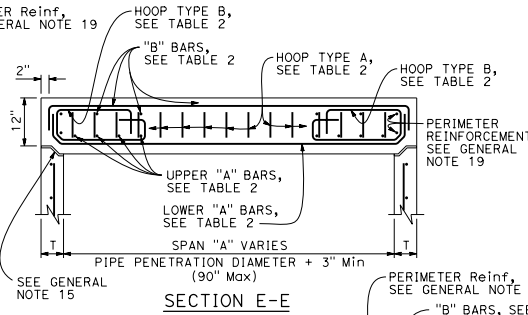

SECTION E-E

TABLE 2 - TOP SLAB REINFORCEMENT		
16 BAR DIAMETERS "A" & "B" BARS, VARIES; BEND TO AVOID KEYED JOINT WHERE SHOWN		
	W/ CURB	W/O CURB
"A" BARS	#4 @ 5 (2 BARS Min)	#5 @ 5 (3 BARS Min)
"B" BARS	#4 @ 10 (2 BARS Min)	#4 @ 10 (2 BARS Min)
HOOPS ("A" & "B")	#4 @ 5	#5 @ 5

ROTATE "A" AND "B" BARS SO HOOKED ENDS WILL MAINTAIN 2" CLEAR COVERAGE.

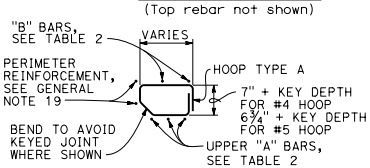

HOOP TYPE A

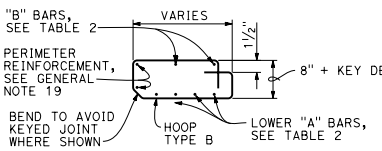

HOOP TYPE B

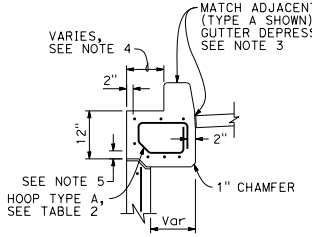

SECTION F-F

(With G4 Top)

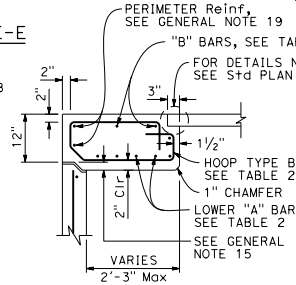

SECTION G-G

STATE OF CALIFORNIA
DEPARTMENT OF TRANSPORTATION

PRECAST DRAINAGE INLETS TYPES G1, G2, G3, G4, G5 AND G6

NO SCALE

D73C

7-1-26

2026 STANDARD PLAN D73C

Return to Table of Contents

Dist	COUNTY	ROUTE	POST MILES TOTAL PROJECT	SHEET No.	TOTAL SHEETS

REGISTERED CIVIL ENGINEER

September 18, 2026
PLANS APPROVAL DATE

REGISTERED PROFESSIONAL ENGINEER Carl M. Duan No. C59976 Exp. 6-30-28 CIVIL STATE OF CALIFORNIA

THE STATE OF CALIFORNIA OR ITS OFFICERS OR AGENTS SHALL NOT BE RESPONSIBLE FOR THE ACCURACY OR COMPLETENESS OF SCANNED COPIES OF THIS PLAN SHEET.

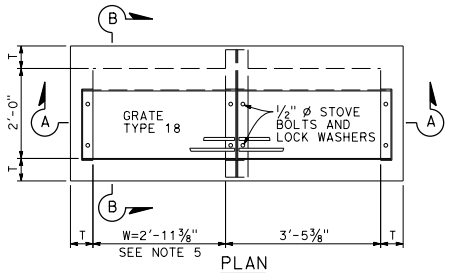

PLAN
TYPE GT1

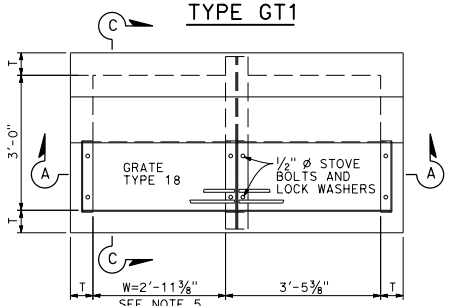

PLAN
TYPE GT2

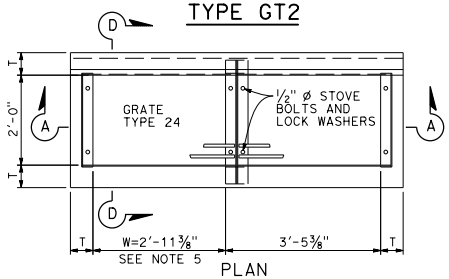

PLAN
TYPE GT3

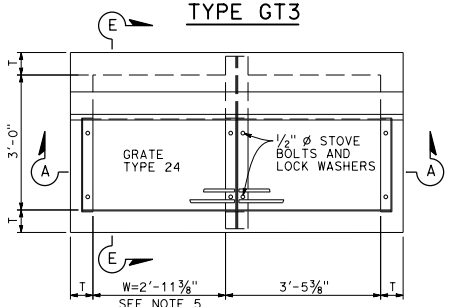

PLAN
TYPE GT4

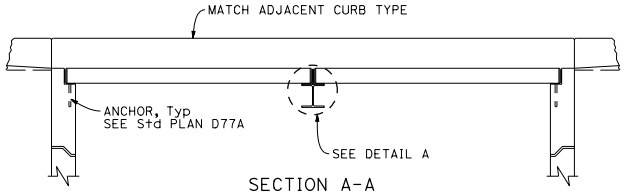

SECTION A-A

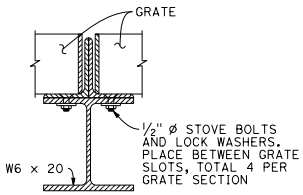

DETAIL A

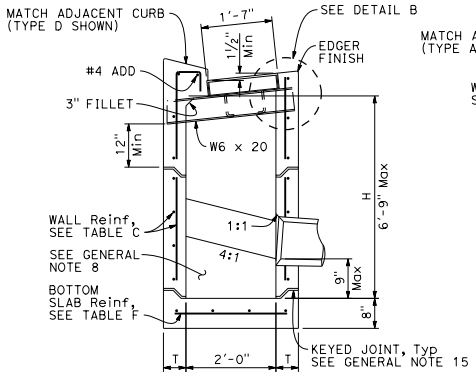

SECTION B-B

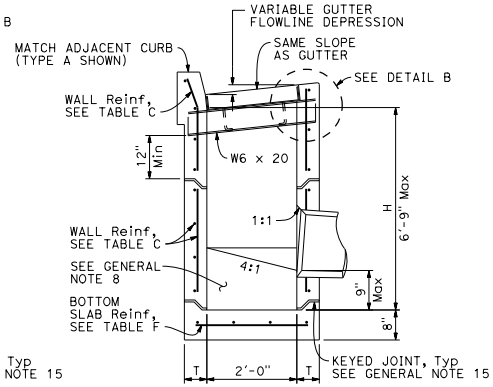

SECTION D-D

NOTES:

1. See Standard Plan D73F for General Notes and additional details. See Standard Plan D73G for tables, wall thickness "T" and quantities.
2. W=2'-11⅜" for one grate. Add 3'-5⅜" for additional grates in tandem.
3. Complete joint penetration butt welds may be substituted for the fillet welds on all anchors.
4. Standard square, hexagon, round or equivalent headed anchors may be substituted for the right angle hooks on the anchors shown on this plan.
5. Overall interior length of lower sections may be 6'-6" provided top section conforms to the requirements for frame and grate types on Standard Plan D77A. The wall thickness of top sections may transition from "T" to "T"+⅝" to meet this requirement. Minimum height of thickened wall shall = "T".

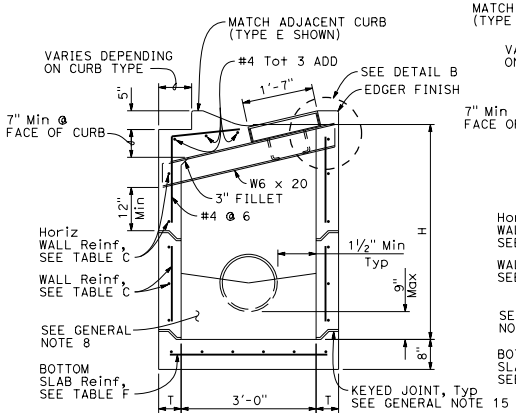

SECTION C-C

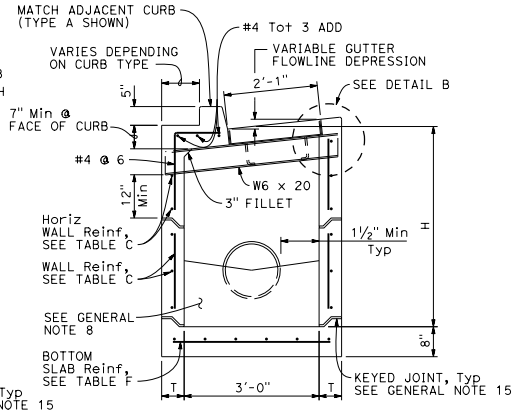

SECTION E-E

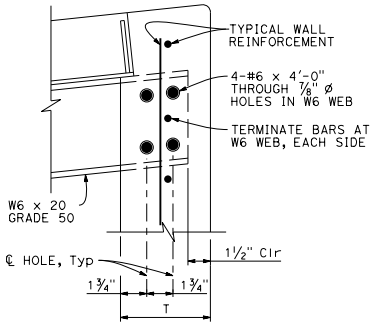

DETAIL B
(Similar opposite end of W6)

STATE OF CALIFORNIA
DEPARTMENT OF TRANSPORTATION

PRECAST DRAINAGE INLETS TYPES GT1, GT2, GT3 AND GT4

NO SCALE

D73D

7-1-26

Return to Table of Contents

Dist	COUNTY	ROUTE	POST MILES TOTAL PROJECT	SHEET No.	TOTAL SHEETS

REGISTERED CIVIL ENGINEER

September 18, 2026
PLANS APPROVAL DATE

REGISTERED PROFESSIONAL ENGINEER Carl M. Duan No. C59976 Exp. 6-30-28 CIVIL STATE OF CALIFORNIA

THE STATE OF CALIFORNIA OR ITS OFFICERS OR AGENTS SHALL NOT BE RESPONSIBLE FOR THE ACCURACY OR COMPLETENESS OF SCANNED COPIES OF THIS PLAN SHEET.

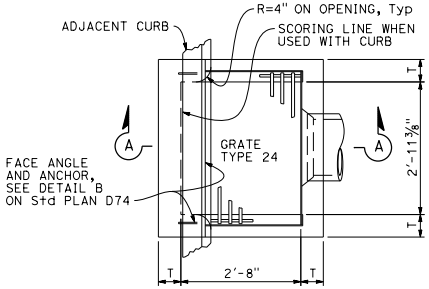

PLAN
TYPE GO

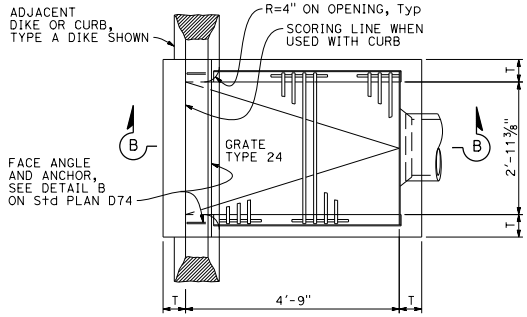

PLAN
TYPE GDO

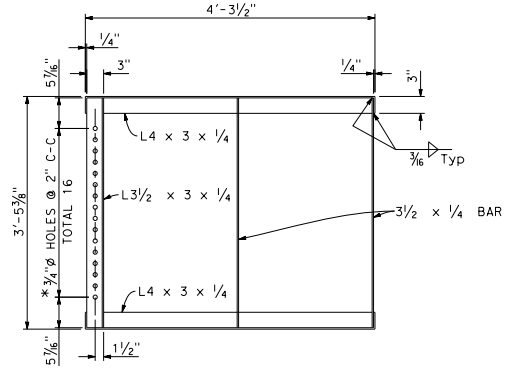

GRATE FRAME FOR TYPE GDO INLET

* Holes required only with trash rack

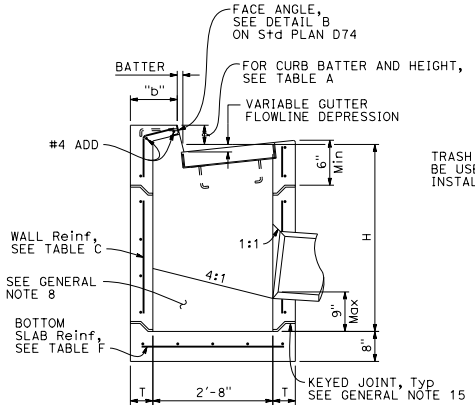

SECTION A-A

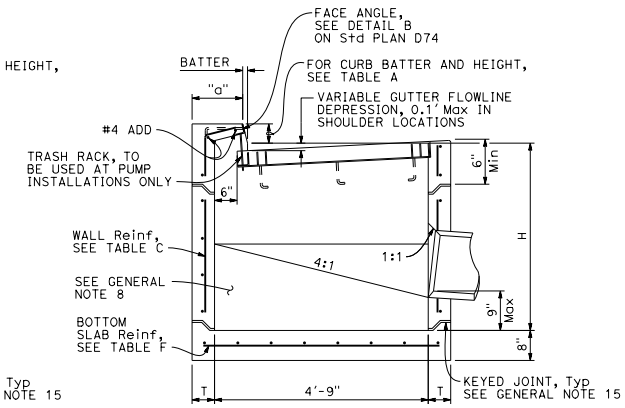

SECTION B-B

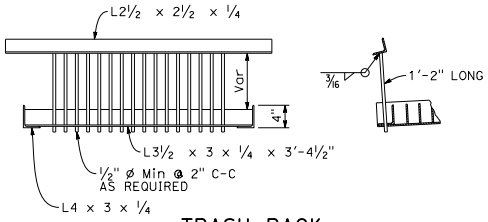

TRASH RACK

FOR USE WITH PUMP INSTALLATION

NOTES:

1. See Standard Plan D73F for General Notes and additional details. See Standard Plan D73G for tables, wall thickness "T" and quantities.
2. Where shown on the project plans, place a ¾"ø plain round protection bar horizontally across the length of the opening and bend back 4" into the inlet wall on each side.
3. Complete joint penetration butt welds may be substituted for the fillet welds on all anchors.
4. Standard square, hexagon, round or equivalent headed anchors may be substituted for the right angle hooks on the anchors shown on this plan.

TABLE A

CURB TYPE	NORMAL CURB HEIGHT	CURB BATTER	"a" DIMENSION	"b" DIMENSION
A1-6	6"	1½"	T+7½"	T+6½"
A1-8	8"	2"	T+7"	T+6"
B1-6	6"	4"	T+5"	T+4"
TYPE A DIKE	6"	3"	T+6"	T+5"

Height of curb opening will vary with the type of curb and the depth of the local depression.

STATE OF CALIFORNIA
DEPARTMENT OF TRANSPORTATION

PRECAST DRAINAGE INLETS TYPES GO AND GDO

NO SCALE

D73E

2026 STANDARD PLAN D73E

7-1-26

Return to Table of Contents

Dist	COUNTY	ROUTE	POST MILES TOTAL PROJECT	SHEET No.	TOTAL SHEETS

REGISTERED CIVIL ENGINEER

September 18, 2026

PLANS APPROVAL DATE

REGISTERED PROFESSIONAL ENGINEER Carl M. Duan No. C59976 Exp. 6-30-28 CIVIL STATE OF CALIFORNIA

THE STATE OF CALIFORNIA OR ITS OFFICERS OR AGENTS SHALL NOT BE RESPONSIBLE FOR THE ACCURACY OR COMPLETENESS OF SCANNED COPIES OF THIS PLAN SHEET.

GENERAL NOTES:

1. "H" is measured from top of bottom slab to the normal gutter grade line undepressed at the curb face.
2. For "T" wall thickness and reinforcement, see Table C on Standard Plan D73G.
3. Wall reinforcement must be placed at the center of wall thickness with horizontal bars placed on the exterior face. Bottom slab concrete cover must be 3" clear on the interior side face unless otherwise noted. Top slab concrete cover must be 2" clear on the exterior face unless otherwise noted. Short independent wall sections or height adjustment rings 6" to 24" high must have a minimum of two #4 horizontal bars. Reinforcement spacing is in inches unless otherwise noted.
4. Steps - None required where "H" is less than 2'-6". Where "H" is 2'-6" or more, install steps with lowest rung 1'-0" above the floor and highest rung not more than 6" below bottom of lid. The distance between steps must not exceed 1'-0" and be uniform throughout the length of the wall. Place steps in the wall without an opening. Steps inserts may be substituted for the bar steps. Step inserts must comply with State Industrial Safety Requirements. See Standard Plan D74 for step details.
5. Pipe(s) can be placed in any wall. Adjacent to each side of the opening, place additional reinforcement equivalent to half the interupted main reinforcement. For larger pipes greater than or equal to 42" diameter, also add 4 diagonal bars, 1 bar each side. Bars must be the same size as the larger of the main vertical or horizontal bars. Extend bars one development length past the intersection with the adjacent diagonal bar, or where bars intersect mid thickness of adjacent wall bottom or top of non-continuous wall, bend ends as required into same plane.
6. Set inlet so that grate bars are parallel to direction of principal surface flow.
7. Curb section must match adjacent curb.
8. Except for inlets used as junction boxes, basin floors must have wood trowel finish and a minimum slope of 4:1, unless otherwise noted, from all directions toward outlet pipe by casting grout on top of the bottom slab. Grout must be placed prior to backfill.
9. See Standard Plans D77A and D77B for grate and frame details and weights of miscellaneous iron and steel.
10. See Standard Plans D78A and D78B for gutter depression details.
11. See Standard Plans A87A and A87B for curb and dike details.
12. Details shown apply to metal, concrete and plastic pipe(s).
13. The Contractor may use WWR instead of bar reinforcement. The ratio of bar reinforcement to WWR shall be based on the yield strength ratio.
14. Seal precast inlets connection openings between wall and pipe with non-shrink grout or resilient connectors as specified in the Special Provisions. Precast inlets shall have mortared connections conforming to details for Type GCP Inlet shown on Standard Plan D75B. See Standard Specifications for mortar composition.
15. Where shown, provide precast inlets with separate top sections for final grade adjustment. Provide keyed joints with butyl rubber sealant between the top section and wall, multiple wall sections, and wall and bottom slab. Joint design may vary but must be 1" to 3" in depth. For tongue type joints, tongue down orientation is not allowed. For keyed joints, keyway up, keyway down or tongue up configurations are allowed. Only one key type is allowed for each drainage inlet.
16. Non-shrink grout can be used for upper most joint to facilitate final top grade adjustment.
17. Provide a level and firm sand bedding on which to place precast inlets. Extend sand bedding under all structure backfill.
18. For Integral Base, see Detail A.
19. Perimeter reinforcement must not be smaller than main bars and #4 and serves as a rigid frame to position and attach the required structural reinforcement and may be tack welded at outer corners when using ASTM A706 weldable bars.
20. Inlet extensions may be cast in place after placement of main box and placement and compaction of backfill. Concrete strength must be 3.6 ksi minimum. All slab and wall thicknesses must be per Standard Plan D72A. All reinforcement shall extend a minimum of 24" from precast main inlet box.

DESIGN NOTES:

1. Design Specifications: AASHTO LRFD Bridge Design Specifications, 6th edition with 2012 Interims and Errata and CA Amendments.
2. Live Load (AASHTO LRFD 3.6.1.2):
   HL-93, consists of design truck or tandem, and design lane load.
   Dynamic Load Allowance, IM = 33%
   Multiple Presence Factor, m = 1.0
   Design lane load was excluded in Top Slab design.
   A wheel load of 8 kips without impact factor was used for top slabs that are above a curb.
3. Earth Load:
   Vertical pressure = 140 pcf
   Lateral pressure:
   = 100 pcf for walls with flat embankment
   = 140 pcf For walls with slope embankment, 1.5:1 Max
4. Downdrag: ϕ = 34° and γ_E = 120 pcf.
5. Buoyancy: γ_W = 62.4 pcf to finished grade.
6. Reinforced Concrete: f'c = 5.0 ksi, fy = 60.0 ksi.
7. Tables are based on the worst case from the level ground and sloped ground.
8. Soil pressures shown are factored per AASHTO LRFD and include self-weight, live load and downdrag.

SPAN "A" OR "B" (IN)	L (IN)
<38	34
38 TO 50	40
51 TO 64	47
65 TO 76	53
77 TO 90	60

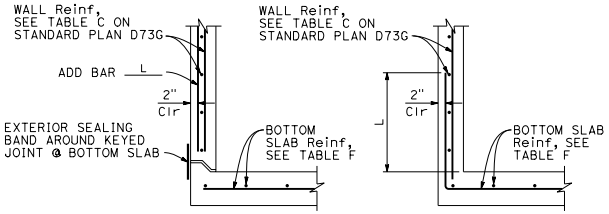

BASE WITH KEYED JOINT INTEGRAL BASE

DETAIL "A"

FOR INTEGRAL BASE, CLEARANCE BETWEEN PIPE PENETRATION AND BASE SLAB MAY BE AS SHOWN IN CIP ALTERNATIVE STANDARD PLAN SHEET.

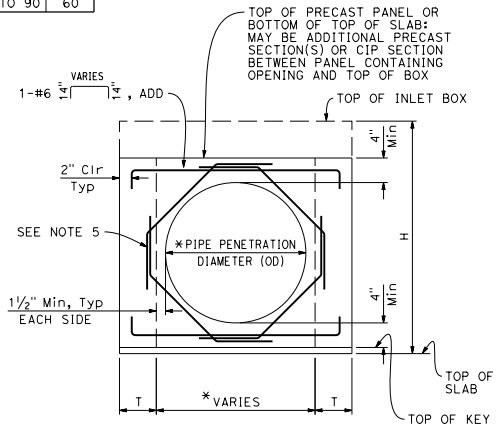

BASE WITH KEYED JOINT

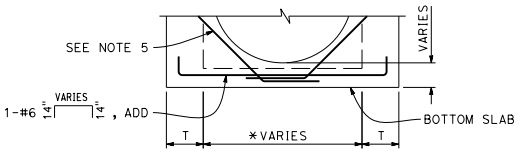

INTEGRAL BASE

For details not shown, see "BASE WITH KEYED JOINT"

TYPICAL WALL W/ PIPE OPENING

* See "SKEWED PIPE PLAN"

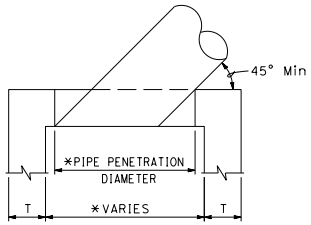

SKEWED PIPE PLAN

* ADJUST PIPE PENETRATION AND BOX WIDTH FOR SKEWED PIPES.

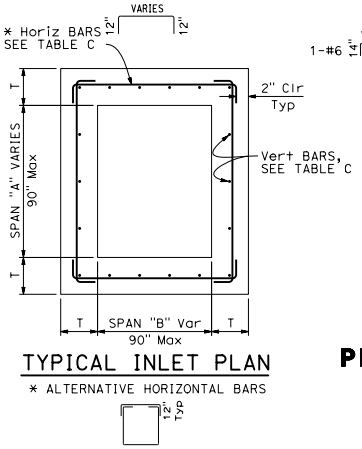

TYPICAL INLET PLAN

* ALTERNATIVE HORIZONTAL BARS

STATE OF CALIFORNIA
DEPARTMENT OF TRANSPORTATION

PRECAST DRAINAGE INLET NOTES

NO SCALE

D73F

2026 STANDARD PLAN D73F

7-1-26

Return to Table of Contents

Dist	COUNTY	ROUTE	POST MILES TOTAL PROJECT	SHEET No.	TOTAL SHEETS

REGISTERED CIVIL ENGINEER

September 18, 2026

PLANS APPROVAL DATE

REGISTERED PROFESSIONAL ENGINEER Carl M. Duan No. C59976 Exp. 6-30-28 CIVIL STATE OF CALIFORNIA

THE STATE OF CALIFORNIA OR ITS OFFICERS OR AGENTS SHALL NOT BE RESPONSIBLE FOR THE ACCURACY OR COMPLETENESS OF SCANNED COPIES OF THIS PLAN SHEET.

TABLE A - CONCRETE QUANTITIES

TYPE	H=3'-0" TO 8'-0"		H=8'-1" TO 20'-0"	
	H=3'-0" (CY)	ADDITIONAL CONCRETE PER FOOT (CY)	H=8'-1" (CY)	ADDITIONAL CONCRETE PER FOOT (CY)
G1	0.95	0.220	SEE NOTE 2	SEE NOTE 2
G2*	1.25	0.255	2.55	0.255
G3	1.06	0.220	SEE NOTE 2	SEE NOTE 2
G4 (TYPE 18)*	1.41	0.255	2.71	0.255
G4 (TYPE 24)*	1.36	0.255	2.65	0.255
G5	1.09	0.220	SEE NOTE 2	SEE NOTE 2
G6	1.14	0.220	SEE NOTE 2	SEE NOTE 2
OS	1.28	0.278	2.69	0.278
OL7	1.92	0.278	3.33	0.278
OL10	2.43	0.278	3.84	0.278
OL14	3.16	0.278	4.57	0.278
OL21	4.58	0.278	5.99	0.278
GOL7	2.36	0.313	4.04	0.434
GOL10	2.84	0.313	4.53	0.434
GT1	2.30	0.480	SEE NOTE 2	SEE NOTE 2
GT2	2.71	0.530	5.40	0.530
GT3	2.29	0.480	SEE NOTE 2	SEE NOTE 2
GT4	2.69	0.530	5.39	0.530
GO	1.25	0.245	2.37	0.245
GDO	1.64	0.322	3.37	0.446

* Quantities are based on the minimum interior dimensions.

TABLE B - REINFORCEMENT QUANTITIES

TYPE	H=3'-0" TO 8'-0"		H=8'-1" TO 20'-0"	
	H=3'-0" (LB)	ADDITIONAL REINFORCEMENT PER FOOT (LB)	H=8'-1" (LB)	ADDITIONAL REINFORCEMENT PER FOOT (LB)
G1	88.5	21.90	SEE NOTE 2	SEE NOTE 2
G2*	151.5	24.54	277.4	38.64
G3	92.9	21.90	SEE NOTE 2	SEE NOTE 2
G4 (TYPE 18)*	134.4	24.54	260.3	38.64
G4 (TYPE 24)*	125.1	24.54	251.0	38.64
G5	92.5	21.90	SEE NOTE 2	SEE NOTE 2
G6	92.5	21.90	SEE NOTE 2	SEE NOTE 2
OS	145.8	35.57	327.8	49.60
OL7	328.0	35.57	510.0	49.60
OL10	467.5	35.57	649.5	49.60
OL14	667.5	35.57	849.5	49.60
OL21	1056.1	35.57	1238.1	49.60
GOL7	474.7	45.17	706.8	74.02
GOL10	604.9	45.17	836.9	74.02
GT1	349.0	80.48	SEE NOTE 2	SEE NOTE 2
GT2	403.7	86.82	849.1	135.15
GT3	347.0	80.48	SEE NOTE 2	SEE NOTE 2
GT4	403.7	86.82	849.1	135.15
GO	99.8	23.75	221.7	37.46
GDO	208.8	46.22	446.2	75.61

* Quantities are based on the minimum interior dimensions.

TABLE D

INLET	CURB USED IN QUANTITIES
G1	-
G2	-
G3	A1-6
G4 (Type 18)	A1-6
G4 (Type 24)	A1-6
G5	B1-4
G6	½E
OS	-
OL7	-
OL10	-
OL14	-
OL21	-
GOL7	-
GOL10	-
GT1	D-6
GT2	E
GT3	A2-8
GT4	A2-8
GO	-
GDO	-

NOTES:

1. No deduction or adjustment was made to the quantities of concrete and reinforcement for pipe openings, floor alternatives or curb type.
2. Maximum allowable height is 6'-9".
3. Quantities are approximate and for design purposes only.
4. Design is based on envelope of level and sloped ground.

TABLE C - WALL REINFORCEMENT

TYPE	H ≤8'-0" (T=6", UON)			8'-0"< H ≤20'-0" (T=8", UON)		
	HORIZONTAL	VERTICAL	*ADD	HORIZONTAL	VERTICAL	*ADD
OS	#4@6	#3@8	#3@8	#4@4 (T=6")	#3@8	#3@8
OL	#4@6	#3@8	#3@8	#4@4 (T=6")	#3@8	#3@8
GOL	#4@5	#3@8	#3@8	#5@5	#3@6	#3@6
G1 (H ≤6'-9")	#4@9	#3@8	#3@8	-	-	-
G2 & G4 (a** ≤38")	#4@9	#3@8	#3@8	#4@5 (T=6")	#3@8	#3@8
G2 & G4 (38" < a** ≤50")	#4@6	#3@8	#3@8	#4@4 (T=6")	#3@8	#3@8
G2 & G4 (50" < a** ≤64")	#4@5	#3@8	#3@8	#5@5	#3@6	#3@6
G2 & G4 (64"< a** ≤76")	#5@7 (T=8")	#3@6	#3@6	#5@4	#3@6	#5@6
G2 & G4 (76" < a** ≤90")	#5@5 (T=8")	#3@6	#3@6	#5@3	#3@6	#5@6
G3 (H ≤6'-9")	#4@9	#3@8	#3@8	-	-	-
G5 (H ≤6'-9")	#4@9	#3@8	#3@8	-	-	-
G6 (H ≤6'-9")	#4@9	#3@8	#3@8	-	-	-
GT1 (H ≤6'-9")	#5@5 (T=8")	#3@6	#3@6	-	-	-
GT2	#5@5 (T=8")	#3@6	#3@6	#5@3	#3@6	#5@6
GT3 (H ≤6'-9")	#5@5 (T=8")	#3@6	#3@6	-	-	-
GT4	#5@5 (T=8")	#3@6	#3@6	#5@3	#3@6	#5@6
GO	#4@9	#3@8	#3@8	#4@5 (T=6")	#3@8	#3@8
GDO	#4@5	#3@8	#3@8	#5@5	#3@6	#3@6

* See Detail A on Standard Plan D73F for additional vertical bars at the base.
** a = Larger interior span

TABLE E

SOIL PRESSURE BELOW BASE SLAB (ksf)

TYPE	H ≤8'-0"	8'-0"< H ≤20'-0"
OS	2.89	5.68
OL*	2.89	5.68
GOL*	2.36	4.93
G1 (H ≤6'-9")	3.51	-
G2 & G4 (a** ≤38")	2.96	5.79
G2 & G4 (38" < a** ≤50")	2.21	4.51
G2 & G4 (50" < a** ≤64")	3.19	4.89
G2 & G4 (64"< a** ≤76")	2.50	4.23
G2 & G4 (76" < a** ≤90")	2.04	3.56
G3 (H ≤6'-9")	3.51	-
G5 (H ≤6'-9")	3.51	-
G6 (H ≤6'-9")	3.51	-
GT1 (H ≤6'-9")	3.41	-
GT2	3.60	6.42
GT3 (H ≤6'-9")	3.41	-
GT4	3.60	6.42
GO	3.37	6.46
GDO	2.48	7.30

* Main Box
** a = Larger interior span

TABLE F

BASE SLAB REINFORCEMENT (T=8", UON)

TYPE	H ≤8'-0"	8'-0"< H ≤20'-0"
OS	#4@8 (EW)	#4@5 (EW)
OL*	#4@8 (EW)	#4@5 (EW)
GOL*	#4@6 (EW)	#4@4 (EW)
G1 (H ≤6'-9")	#4@10 (EW)	-
G2 & G4 (a** ≤38")	#4@10 (EW)	#4@6 (EW)
G2 & G4 (38" < a** ≤50")	#4@8 (EW)	#4@5 (EW)
G2 & G4 (50" < a** ≤64")	#4@6 (EW)	#4@4 (EW)
G2 & G4 (64"< a** ≤76")	#4@5 (EW)	#4@3 (EW)
G2 & G4 (76" < a** ≤90")	#4@4 (EW)	#5@3 (EW)
G3 (H ≤6'-9")	#4@10 (EW)	-
G5 (H ≤6'-9")	#4@10 (EW)	-
G6 (H ≤6'-9")	#4@10 (EW)	-
GT1 (H ≤6'-9")	#4@4 (EW)	-
GT2	#4@4 (EW)	#5@3 (EW)
GT3 (H ≤6'-9")	#4@4 (EW)	-
GT4	#4@4 (EW)	#5@3 (EW)
GO	#4@10 (EW)	#4@6 (EW)
GDO	#4@6 (EW)	#4@4 (EW)

(EW) Each Way
* Main Box
** a = Larger interior span

STATE OF CALIFORNIA
DEPARTMENT OF TRANSPORTATION

PRECAST DRAINAGE INLET TABLES

D73G

2026 STANDARD PLAN D73G

7-1-26

Return to Table of Contents

Dist	COUNTY	ROUTE	POST MILES TOTAL PROJECT	SHEET No.	TOTAL SHEETS

REGISTERED CIVIL ENGINEER

September 18, 2026

PLANS APPROVAL DATE

REGISTERED PROFESSIONAL ENGINEER Carl M. Duan No. C59976 Exp. 6-30-28 CIVIL STATE OF CALIFORNIA

THE STATE OF CALIFORNIA OR ITS OFFICERS OR AGENTS SHALL NOT BE RESPONSIBLE FOR THE ACCURACY OR COMPLETENESS OF SCANNED COPIES OF THIS PLAN SHEET.

FACE ANGLE DETAIL "A"	
LENGTH OF CURB OPENING	No. OF ANCHORS
3'-6" OR LESS	2
7'-0"	3
10'-0"	4
14'-0"	5
21'-0"	7

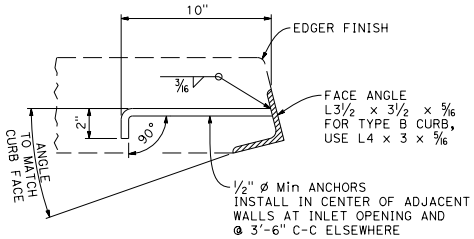

DETAIL A

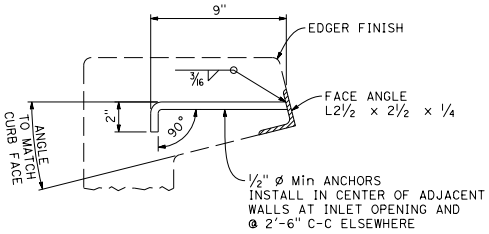

DETAIL B

FACE ANGLE AND ANCHOR

NOTE:

1. When shown on the project plans, place a ¾" ø plain round protection bar horizontally across the length of the opening and bend back 4" into the inlet wall on each side.

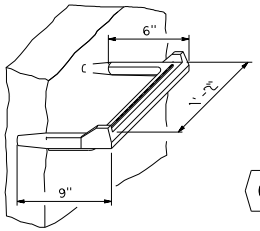

STEP INSERT

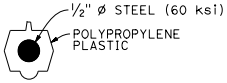

TYPICAL SECTION
(Step insert)

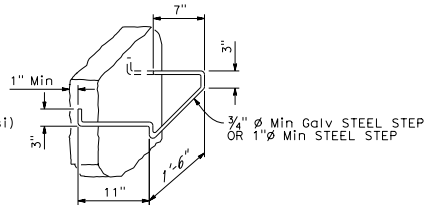

BAR STEP

STEP DETAILS

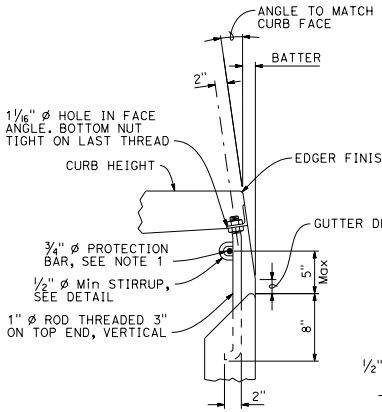

DETAIL C

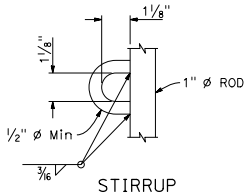

STIRRUP

CURB SUPPORT

CURB SUPPORTS SHALL BE EVENLY SPACED AND MINIMAL IN NUMBER SUCH THAT MAXIMUM SPAN OF UNSUPPORTED CURB IS 7'-0".

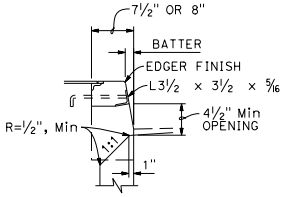

TYPE A CURBS

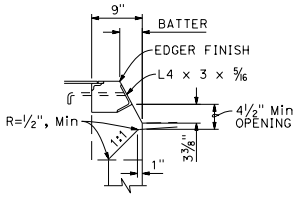

TYPE B CURBS

CURB OPENING DETAILS

STATE OF CALIFORNIA
DEPARTMENT OF TRANSPORTATION

DRAINAGE INLET DETAILS

NO SCALE

D74

7-1-26

2026 STANDARD PLAN D74

Return to Table of Contents

Dist	COUNTY	ROUTE	POST MILES TOTAL PROJECT	SHEET No.	TOTAL SHEETS

REGISTERED CIVIL ENGINEER

September 18, 2026

PLANS APPROVAL DATE

REGISTERED PROFESSIONAL ENGINEER Sean T. Penders No. C63744 Exp. 9-30-26 CIVIL STATE OF CALIFORNIA

THE STATE OF CALIFORNIA OR ITS OFFICERS OR AGENTS SHALL NOT BE RESPONSIBLE FOR THE ACCURACY OR COMPLETENESS OF SCANNED COPIES OF THIS PLAN SHEET.

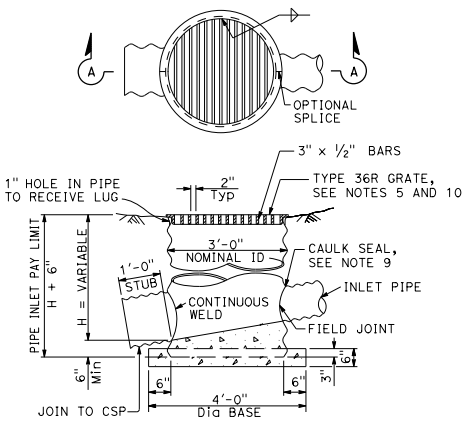

SECTION A-A

TYPE GMP

Steel pipe inlet with grate

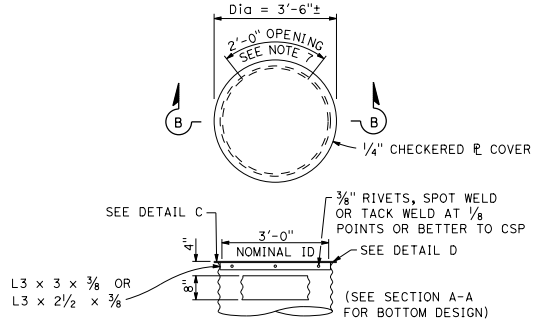

SECTION B-B

TYPE OMP or OMPI

Steel pipe inlet with side opening and steel cover (see Note 6)

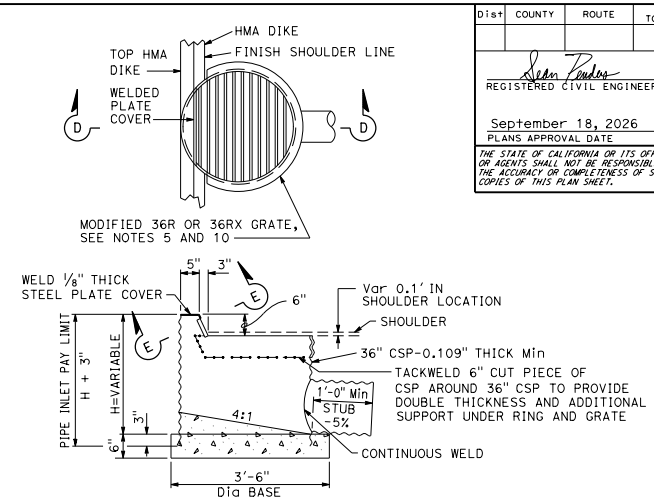

SECTION D-D

TYPE ODI

Steel pipe inlet with grate and raised opening at HMA dike flowline

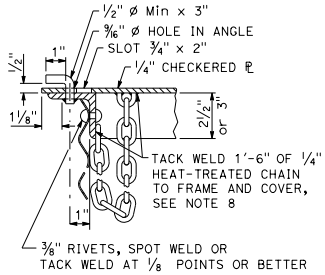

DETAIL C

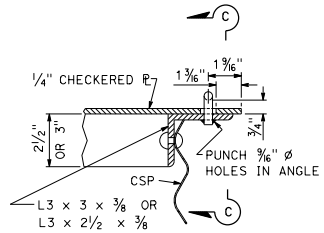

DETAIL D

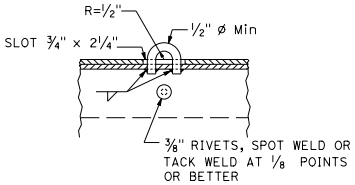

SECTION C-C

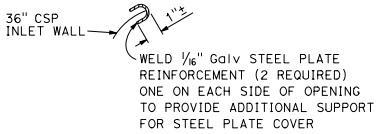

SECTION E-E

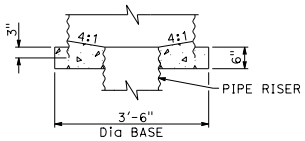

TYPE ODI BASE DETAIL FOR PIPE RISER CONNECTION

NOTES:

1. For Details of concrete pipe inlets, see Standard Plan D75B.
2. For details of ladder and steps and when ladder or steps are required, see Standard Plan D75C.
3. Inlet pipes shall not protrude into basin.
4. Except for inlets used for junction boxes, basin floors shall have minimum slope of 4:1 from all directions toward outlet pipe, and a wood trowel finish.
5. See Standard Plans D77A and D77B for Grate and Frame Details and weights of Miscellaneous Iron and Steel.
6. Designation of Type OMPI pipe inlets on plans indicates trash racks are to be furnished and installed on all side openings. See Standard Plan D75C for trash rack details.
7. More than one side opening may be required. Location and number as ordered by the Engineer.
8. Chain to be provided when specified.
9. Caulk seal with pliable mixture of sand, portland cement, and emulsified asphalt (Mixture of 1 part portland cement, 3-5 parts sand, and 1 1/2" parts SSI emulsified asphalt).
10. Place pipe so bars of grate will be parallel with main surface flow.

STATE OF CALIFORNIA
DEPARTMENT OF TRANSPORTATION

STEEL PIPE INLETS

NO SCALE

D75A

2026 STANDARD PLAN D75A

7-1-26

Return to Table of Contents

Dist	COUNTY	ROUTE	POST MILES TOTAL PROJECT	SHEET No.	TOTAL SHEETS

REGISTERED CIVIL ENGINEER

September 18, 2026
PLANS APPROVAL DATE

Sean T. Penders No. C63744 Exp. 9-30-26 CIVIL — REGISTERED PROFESSIONAL ENGINEER — STATE OF CALIFORNIA

THE STATE OF CALIFORNIA OR ITS OFFICERS OR AGENTS SHALL NOT BE RESPONSIBLE FOR THE ACCURACY OR COMPLETENESS OF SCANNED COPIES OF THIS PLAN SHEET.

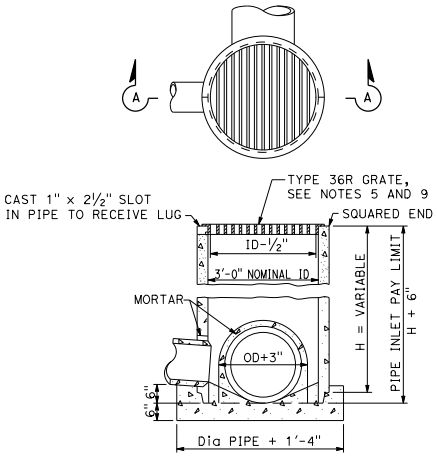

SECTION A-A

TYPE GCP

Concrete pipe inlet with grate

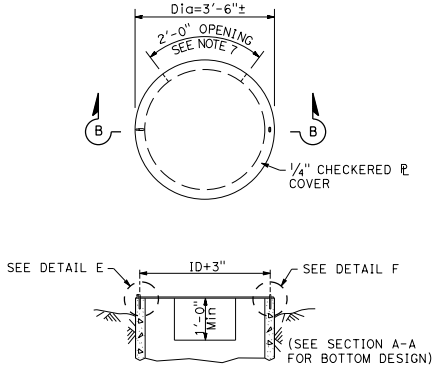

SECTION B-B

TYPE OCP or OCPI

Concrete pipe inlet with steel cover
(See Note 6)

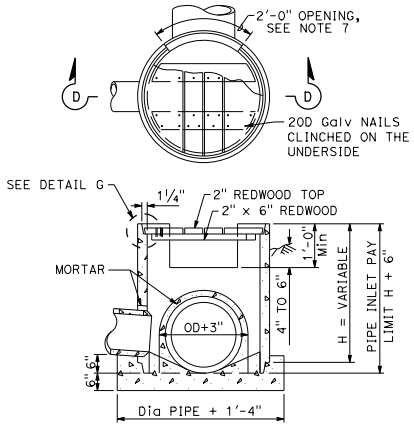

SECTION D-D

TYPE OCP OR OCPI

Concrete pipe inlet with redwood cover
(See Notes 6 and 10)

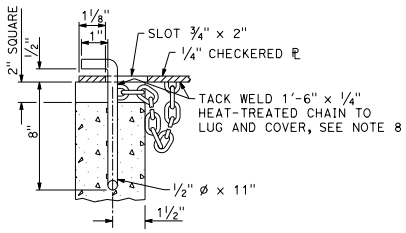

DETAIL E

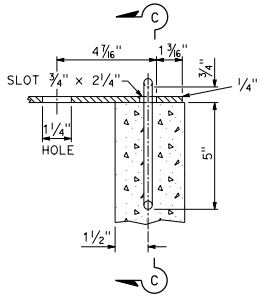

DETAIL F

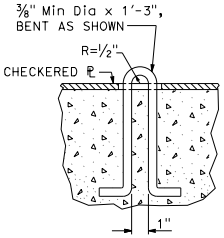

SECTION C-C

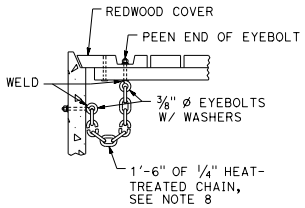

DETAIL G

NOTES:

1. For details of steel pipe inlets, see Standard Plan D75A.
2. For details of ladder and steps and when ladder or steps are required, see Standard Plan D75C.
3. Inlet pipes shall not protrude into basin.
4. Except for inlets used for junction boxes, basin floors shall have minimum slope of 4:1 from all directions toward outlet pipe, and a wood trowel finish.
5. See Standard Plan D77A and Standard Plan D77B for Grate and Frame Details and Weights of Miscellaneous Iron and Steel.
6. Designation of Type OCPI pipe inlets on plans indicates trash racks are to be furnished and installed on all side openings. See Standard Plan D75C for Trash Rack details.
7. More than one side opening may be required. Location and number as ordered by the Engineer. Opening may be cast in pipe.
8. Chain to be provided when specified.
9. Place pipe so bars of grate will be parallel with main surface flow.
10. Redwood covers shall only be placed at locations designated on the plans.

STATE OF CALIFORNIA
DEPARTMENT OF TRANSPORTATION

CONCRETE PIPE INLETS

NO SCALE

D75B

2026 STANDARD PLAN D75B

7-1-26

Return to Table of Contents

Dist	COUNTY	ROUTE	POST MILES TOTAL PROJECT	SHEET No.	TOTAL SHEETS

REGISTERED CIVIL ENGINEER

September 18, 2026
PLANS APPROVAL DATE

REGISTERED PROFESSIONAL ENGINEER Sean T. Penders No. C63744 Exp. 9-30-26 CIVIL STATE OF CALIFORNIA

THE STATE OF CALIFORNIA OR ITS OFFICERS OR AGENTS SHALL NOT BE RESPONSIBLE FOR THE ACCURACY OR COMPLETENESS OF SCANNED COPIES OF THIS PLAN SHEET.

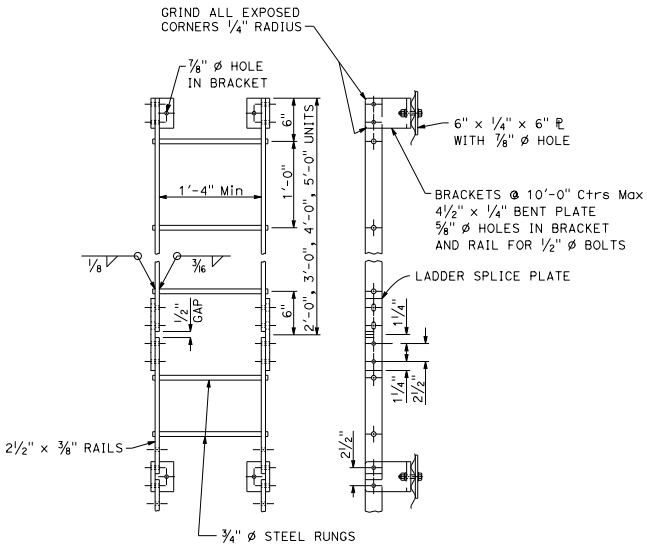

LADDER DETAILS

See Notes 1, 2, 3 and 4

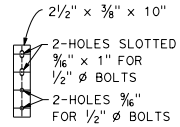

LADDER SPLICE PLATE

(See Note 4)

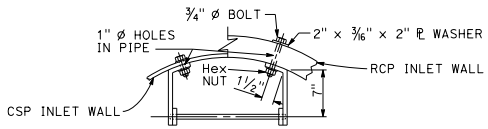

LADDER CONNECTION TO INLET

NOTES:

1. Ladders and Steps - None required where "H" dimension of pipe inlet is less than 2'-6". Where "H" is 2'-6" or more, install steps or ladder with lowest rung not more than 1'-0" above the floor and highest rung not more than 1'-0" below top of inlet. The distance between steps or rungs shall not exceed 1'-0" and shall be uniform throughout the length of the wall. Place steps or ladder in the wall without an opening.
2. Ladder may be constructed in one length at contractor's option on RCP inlet.
3. On CSP inlet, connect ladder splice plate so joint can compress 1/2".
4. Ladder splice plate to be connected with 1/2" Ø bolts with double nuts.
5. Trash racks used on Type OCPI and OMPI inlets. Trash racks required for pumping installations.

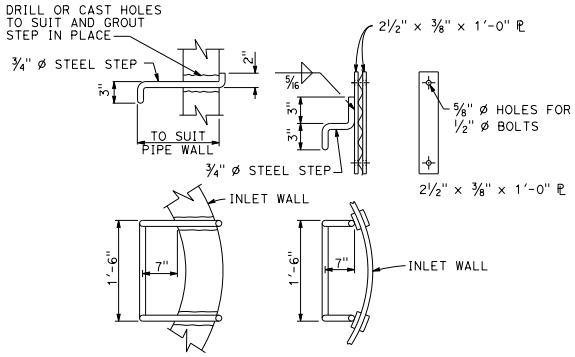

RCP INLET CSP INLET

STEP DETAILS

(See Note 1)

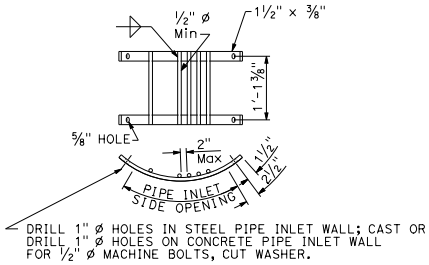

TRASH RACK DETAILS

(See Note 5)

STATE OF CALIFORNIA
DEPARTMENT OF TRANSPORTATION

PIPE INLETS LADDER AND TRASH RACK DETAILS

NO SCALE

D75C

7-1-26

2026 STANDARD PLAN D75C

Return to Table of Contents

Dist	COUNTY	ROUTE	POST MILES TOTAL PROJECT	SHEET No.	TOTAL SHEETS

REGISTERED CIVIL ENGINEER

September 18, 2026

PLANS APPROVAL DATE

REGISTERED PROFESSIONAL ENGINEER Sean T. Penders No. C63744 Exp. 9-30-26 CIVIL STATE OF CALIFORNIA

THE STATE OF CALIFORNIA OR ITS OFFICERS OR AGENTS SHALL NOT BE RESPONSIBLE FOR THE ACCURACY OR COMPLETENESS OF SCANNED COPIES OF THIS PLAN SHEET.

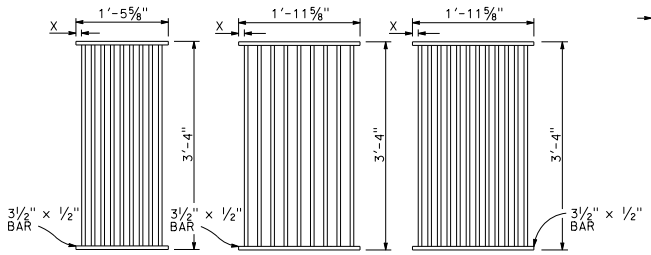

RECTANGULAR GRATE DETAILS

(See table below)

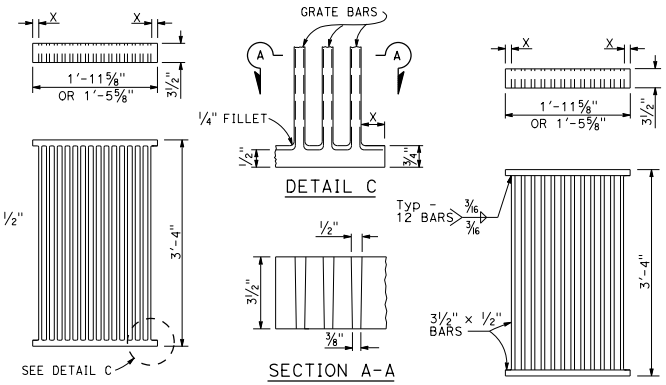

ALTERNATIVE CAST DUCTILE IRON GRATE OR CAST CARBON STEEL GRATE

ALTERNATIVE WELDED GRATE

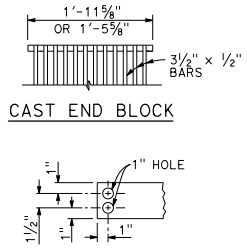

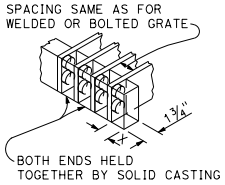

ALTERNATIVE CAST DUCTILE IRON OR CAST CARBON STEEL END BLOCK GRATE

NOTES:

1. Grate type numbers refer to approximate width of grate in inches and number of bars, respectively.
2. Rounded top of bars optional on all grates.
3. Pipe inlets with a grate shall be placed so that bars parallel direction of principle surface flow.
4. Complete joint penetration butt welds may be substituted for the fillet welds on all anchors.
5. Standard square, hexagon, round or equivalent headed anchors may be substituted for the right angle hooks on the anchors shown on this plan.
6. Grate and frame weights are based on welded grates (weights of face angles, steps, protection bars, etc. are not included).
7. Connect chain to grate and frame only at locations shown on the plans. When chain is required, do not use cast ductile iron grates.

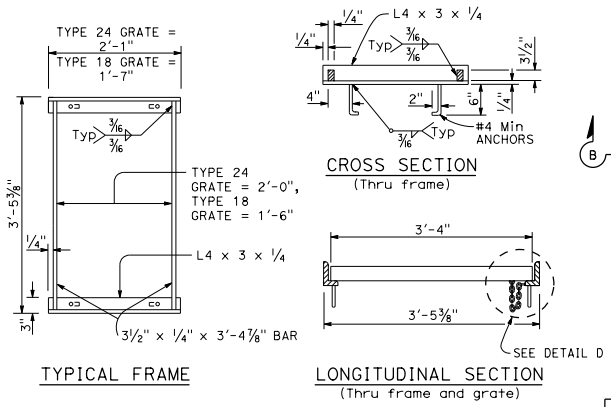

RECTANGULAR FRAME DETAILS

(For all rectangular grates)

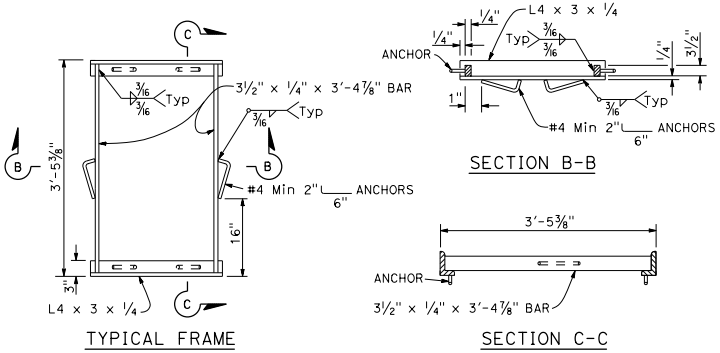

ALTERNATIVE ANCHOR FOR RECTANGULAR FRAME

(For details not shown, See Rectangular Frame Details)

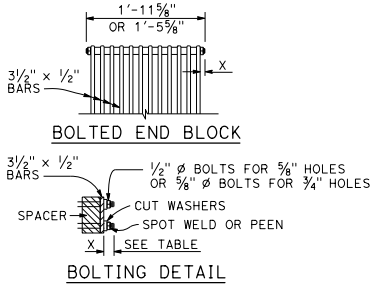

ALTERNATIVE BOLTED GRATE

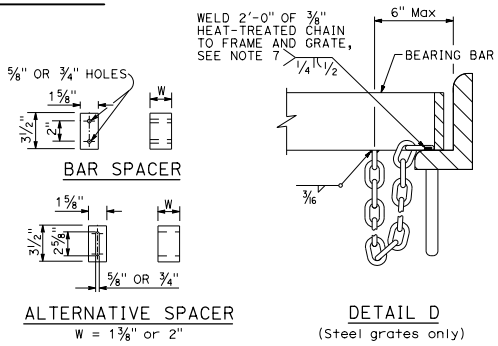

GRATE BAR SPACING TABLE

TYPE	No. OF BARS	CLEAR BAR SPACING	X
18-9	9	1⅜"	1 1/16"
24-9	9	2"	1 3/16"
24-12	12	1⅜"	1¼"

INLET TYPE	COVER TYPE	WEIGHT LB
OS	PLATE	174
OL-7	PLATE	170
OL-10	PLATE	170
OL-14	PLATE	170
OL-21	PLATE	170
OCP	PLATE	112
OCPI	PLATE	112
OCPI	REDWOOD	42
OMP	PLATE	177
OMPI	PLATE	177

INLET TYPE	GRATE TYPE	No. OF GRATES	WEIGHT LB
GDO	24-12	2	634
GOL-7	24-12	1	326
GOL-10	24-12	1	326
GO,G1,G2,G3,G4 (TYPE 24)	24-9	1	263
	24-12	1	326
G4 (TYPE 18),G5,G6	18-9	1	249
GT1	18-9	2	498
GT2	18-9	2	498
GT3	24-12	2	652
GT4	24-12	2	652
TRASH RACK			22
GRATE CHAIN			3

BASIS FOR Misc IRON AND STEEL FINAL PAY WEIGHTS FOR DRAINAGE INLETS

(See Note 6)

STATE OF CALIFORNIA
DEPARTMENT OF TRANSPORTATION

GRATE DETAILS No. 1

NO SCALE

D77A

2026 STANDARD PLAN D77A

7-1-26

Return to Table of Contents

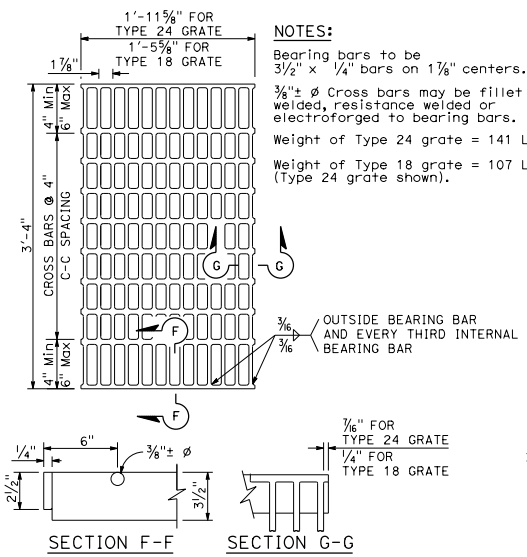

SECTION F-F

SECTION G-G

NOTES:

Bearing bars to be 3½" x ¼" bars on 1⅞" centers.

⅜"± ø Cross bars may be fillet welded, resistance welded or electroforged to bearing bars.

Weight of Type 24 grate = 141 LBS.

Weight of Type 18 grate = 107 LBS. (Type 24 grate shown).

TYPE 18-10 AND 24-13 GRATE

(Welded Steel)

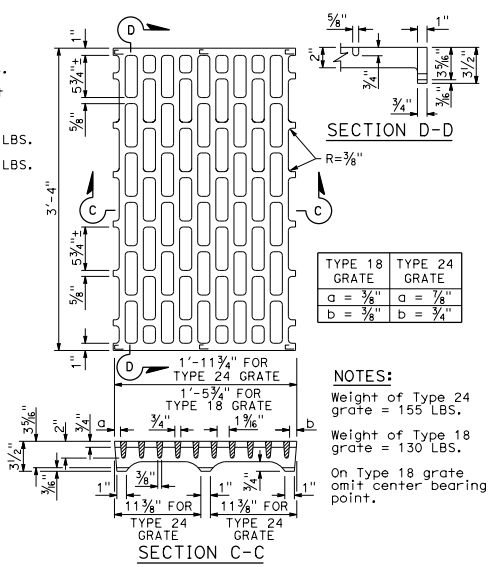

SECTION D-D

TYPE 18 GRATE	TYPE 24 GRATE
a = ⅜"	a = ⅞"
b = ⅜"	b = ¾"

SECTION C-C

NOTES:

Weight of Type 24 grate = 155 LBS.

Weight of Type 18 grate = 130 LBS.

On Type 18 grate omit center bearing point.

TYPE 18-8C AND 24-10C GRATE

(Cast ductile iron)

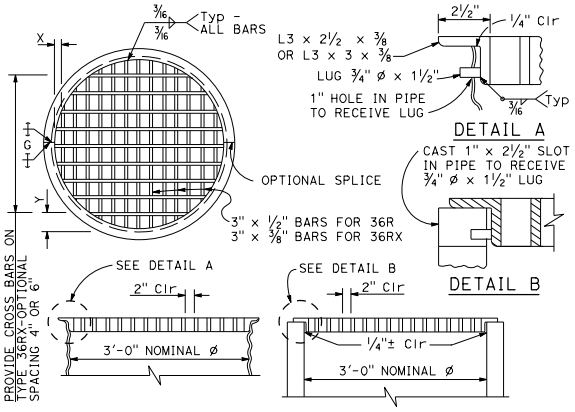

TYPE 36R AND 36RX GRATE DETAILS

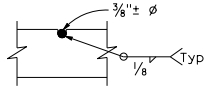

⅜"± ø Cross bars may be fillet welded, resistance welded or electroforged to bearing bars.

CROSS BAR DETAIL TYPE 36RX GRATE (WELDED STEEL)

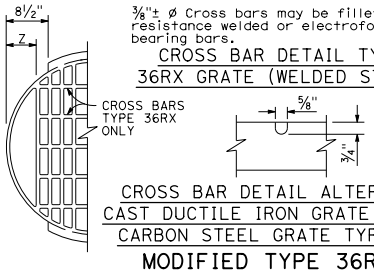

CROSS BAR DETAIL ALTERNATIVE CAST DUCTILE IRON GRATE OR CAST CARBON STEEL GRATE TYPE 36RX

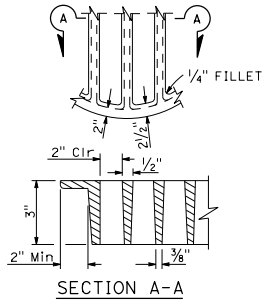

SECTION A-A

ALTERNATIVE CAST DUCTILE IRON GRATE OR CAST CARBON STEEL GRATE TYPE 36R AND 36RX

BASIS FOR Misc IRON AND STEEL FINAL PAY WEIGHTS FOR DRAINAGE INLETS

INLET TYPE	GRATE TYPE	No. OF GRATES	WEIGHT LB
GDO (SEE NOTE 4)	24-10C	2	391
	24-10S	2	456
	24-12X	2	473
	24-13	2	374
GO,GOL,G1,G2, G3,G4 (TYPE 24)	24-10C	1	202
	24-10S	1	229
	24-12X	1	239
	24-13	1	188
G4 (TYPE 18) G5,G6	18-8S	1	187
	18-9X	1	187
	18-10	1	149
GT1,GT2	18-8S	2	374
	18-9X	2	374
	18-10	2	298
GT3,GT4	24-10C	2	404
	24-10S	2	458
	24-12X	2	478
	24-13	2	376
ODI	36RX (Mod)	1	196
GMP,GCP,GCPI	36RX	1	215
ODI	36R (Mod)	1	220
GMP,GCP,GCPI	36R	1	236
TRASH RACK			22
GRATE CHAIN			3

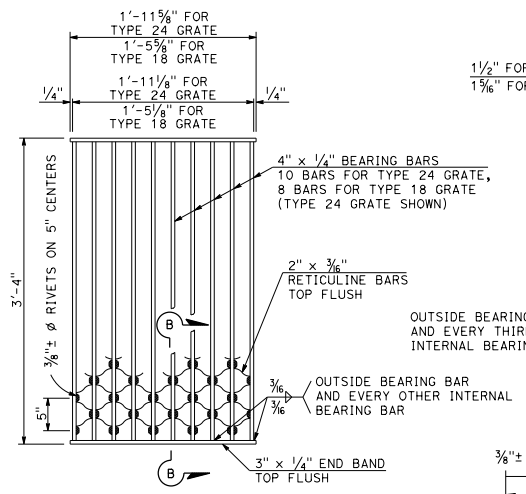

SECTION B-B

NOTES:

Weight of Type 24 grate = 182 LBS.

Weight of Type 18 grate = 145 LBS.

TYPE 18-8S AND 24-10S GRATE

(Welded Steel) Reticuline type

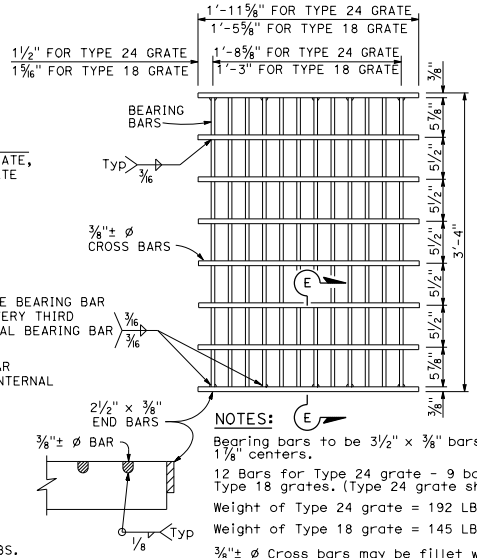

SECTION E-E

NOTES:

Bearing bars to be 3½" x ⅜" bars on 1⅞" centers.

12 Bars for Type 24 grate - 9 bars for Type 18 grates. (Type 24 grate shown).

Weight of Type 24 grate = 192 LBS.

Weight of Type 18 grate = 145 LBS.

⅜"± ø Cross bars may be fillet welded, resistance welded or electroforged to bearing bars.

TYPE 18-9X AND 24-12X GRATE

(Welded Steel)

NOTES:

1. When alternative grates are allowed - Final pay based on alternative with the lesser weight.
2. Use frame shown on Standard Plan D74A, D74B or D77A as appropriate.
3. When Type 24-10S, 24-12X or 24-13 grates are used with GDO Inlets, a ¼" x 3½" x 3'-4⅞" steel bar shall be welded across the center of inlet frame to separate the individual grates.
4. See Standard Plan D77A for connecting chain to welded grate and frame. When chain is required, do not use cast ductile iron grate.

MODIFIED TYPE 36R AND 36RX GRATE FOR ODI INLET

GRATE BAR SPACING TABLE

TYPE	No. OF BARS	CLEAR BAR SPACING	X	Y 4" SPACING	Y 6" SPACING	Z
36R	13	2"	2⅛"	-	-	-
36RX (STEEL)	15	2"	9/16"	3¾"	5¾"	-
36RX (CAST)	13	2"	2⅛"	3¾"	5¾"	-
36R Mod	12	2"	2⅛"	-	-	5"
36RX Mod (STEEL)	13	2"	9/16"	3¾"	5¾"	5 11/16"
36RX Mod (CAST)	12	2"	2⅛"	3¾"	5¾"	5"

Dist	COUNTY	ROUTE	POST MILES TOTAL PROJECT	SHEET No.	TOTAL SHEETS

REGISTERED CIVIL ENGINEER

September 18, 2026

PLANS APPROVAL DATE

REGISTERED PROFESSIONAL ENGINEER Sean T. Penders No. C63744 Exp. 9-30-26 CIVIL STATE OF CALIFORNIA

THE STATE OF CALIFORNIA OR ITS OFFICERS OR AGENTS SHALL NOT BE RESPONSIBLE FOR THE ACCURACY OR COMPLETENESS OF SCANNED COPIES OF THIS PLAN SHEET.

STATE OF CALIFORNIA
DEPARTMENT OF TRANSPORTATION

GRATE DETAILS No. 2

NO SCALE

D77B

7-1-26

Return to Table of Contents

Dist	COUNTY	ROUTE	POST MILES TOTAL PROJECT	SHEET No.	TOTAL SHEETS

REGISTERED CIVIL ENGINEER

September 18, 2026
PLANS APPROVAL DATE

REGISTERED PROFESSIONAL ENGINEER
Sean T. Penders
No. C63744
Exp. 9-30-26
CIVIL
STATE OF CALIFORNIA

THE STATE OF CALIFORNIA OR ITS OFFICERS OR AGENTS SHALL NOT BE RESPONSIBLE FOR THE ACCURACY OR COMPLETENESS OF SCANNED COPIES OF THIS PLAN SHEET.

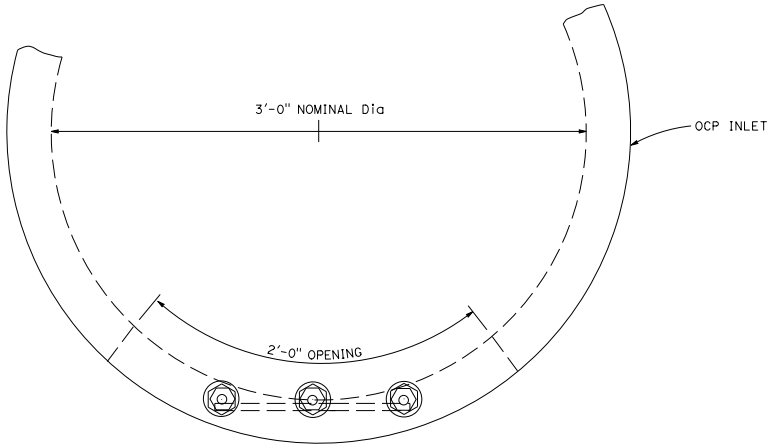

PLAN

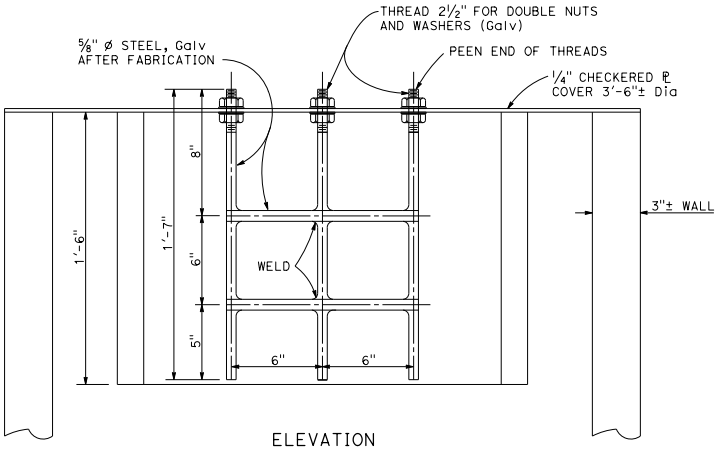

ELEVATION

ALTERNATIVE
TRASH RACK FOR TYPE OCP INLET
Single or double opening

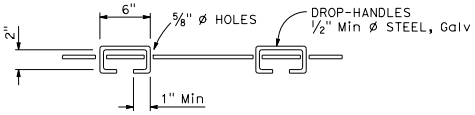

SECTION A-A

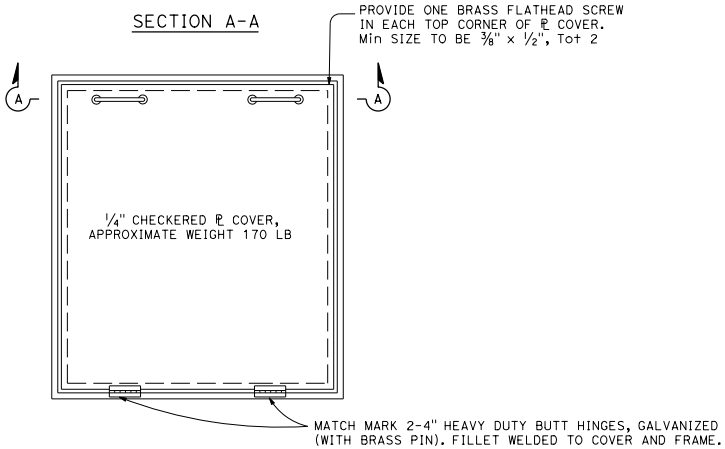

PLAN

HINGED COVER FOR
TYPE OL AND OS INLETS

NOTES:

1. Alternative methods of securing drop-handles to cover will be acceptable.
2. This hinged cover is to be used only on embankment or steep slopes.

STATE OF CALIFORNIA
DEPARTMENT OF TRANSPORTATION

ALTERNATIVE HINGED COVER FOR TYPE OL AND OS INLETS AND TRASH RACK FOR TYPE OCP INLET

NO SCALE

D77C

7-1-26

2026 STANDARD PLAN D77C

Return to Table of Contents

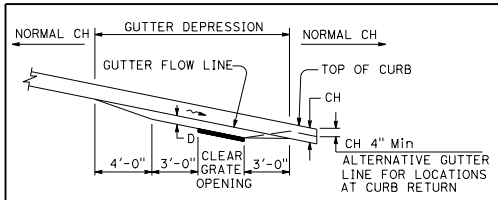

PROFILE

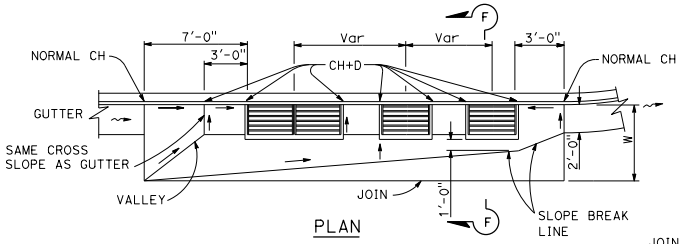

PLAN

GRATE INLET SERIES

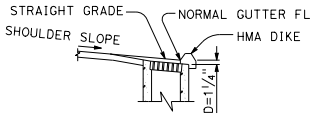

DETAIL OF INLET WITH DIKE

(Single grate shown)

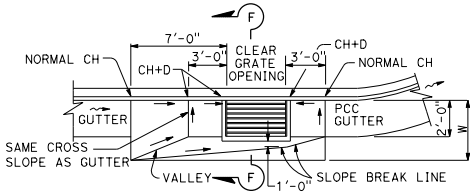

PLAN

TYPE GO AND G1 THRU G6 INLETS ON GRADE

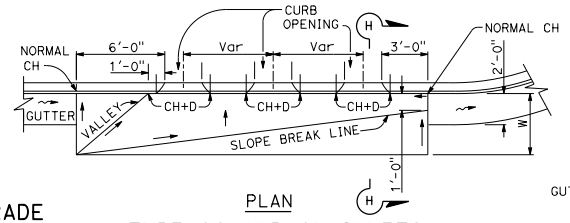

PLAN

TYPE OS AND OL INLETS IN SERIES ON GRADE

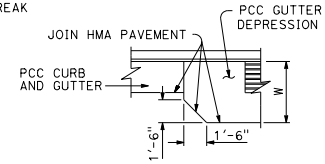

DETAIL OF HOT MIX ASPHALT PAVEMENT

(See Note 4)

NOTES:

1. W = Width of depressed apron. Depressed aprons shall be 4'-0" on shoulder and 4'-0" to 6'-0" in city street gutters unless otherwise shown.
   D = Gutter depression. The gutter depression shall be 1¼" for shoulder and 1¼" to 3" in city street gutter or locations outside of shoulder unless otherwise shown.
   CH = Curb Height.
   → = Straight grade, downward slope.
   ⇝ = Gutter or shoulders direction of flow.
2. Gutter depressions shall be 8" thick.
3. Establish curb opening height at midpoint of grate.
4. Details shown for concrete pavement. When hot mix asphalt pavement is used, corners to be cut off as shown on Detail of Hot Mix Asphalt Pavement.

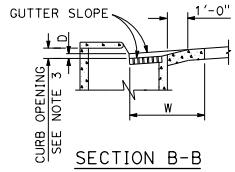

SECTION B-B

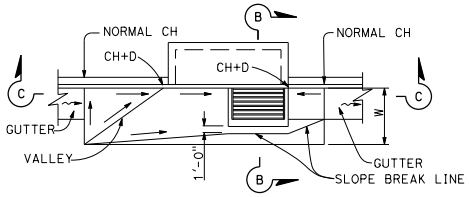

PLAN

TYPE GOL INLET ON GRADE

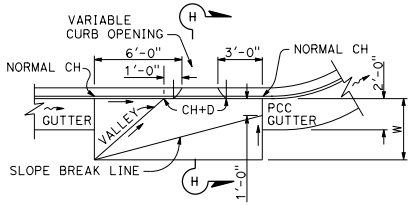

PLAN

TYPE OS AND OL INLETS ON GRADE

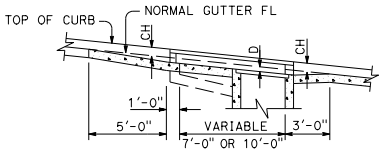

SECTION C-C

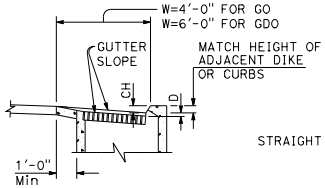

SECTION E-E

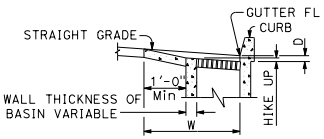

SECTION G-G

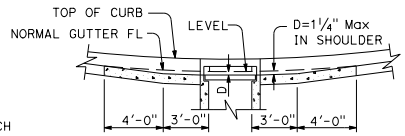

SECTION D-D

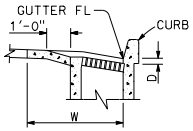

SECTION F-F

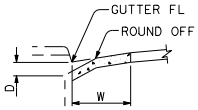

SECTION H-H

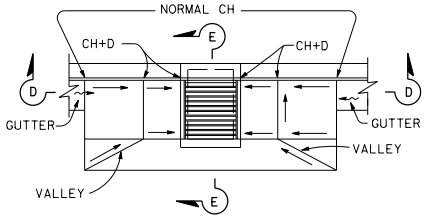

PLAN

TYPE GO AND GDO INLET GRADE SAG

(GDO shown)

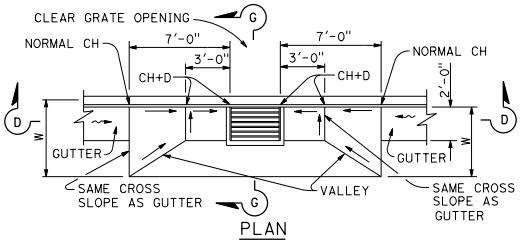

PLAN

TYPE G1 THRU G6 GT3 AND GT4 INLETS IN GRADE SAG

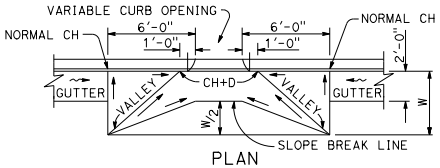

PLAN

TYPE OS AND OL INLETS IN GRADE SAG

Dist	COUNTY	ROUTE	POST MILES TOTAL PROJECT	SHEET No.	TOTAL SHEETS

REGISTERED CIVIL ENGINEER

September 18, 2026

PLANS APPROVAL DATE

REGISTERED PROFESSIONAL ENGINEER Sean T. Penders No. C63744 Exp. 9-30-26 CIVIL STATE OF CALIFORNIA

THE STATE OF CALIFORNIA OR ITS OFFICERS OR AGENTS SHALL NOT BE RESPONSIBLE FOR THE ACCURACY OR COMPLETENESS OF SCANNED COPIES OF THIS PLAN SHEET.

STATE OF CALIFORNIA
DEPARTMENT OF TRANSPORTATION

GUTTER DEPRESSIONS

NO SCALE

D78A

2026 STANDARD PLAN D78A

7-1-26

Return to Table of Contents

Dist	COUNTY	ROUTE	POST MILES TOTAL PROJECT	SHEET No.	TOTAL SHEETS

REGISTERED CIVIL ENGINEER

September 18, 2026

PLANS APPROVAL DATE

REGISTERED PROFESSIONAL ENGINEER Sean T. Penders No. C63744 Exp. 9-30-26 CIVIL STATE OF CALIFORNIA

THE STATE OF CALIFORNIA OR ITS OFFICERS OR AGENTS SHALL NOT BE RESPONSIBLE FOR THE ACCURACY OR COMPLETENESS OF SCANNED COPIES OF THIS PLAN SHEET.

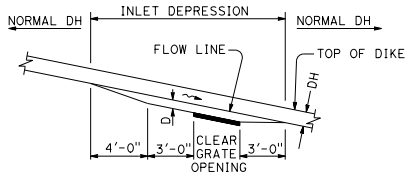

PROFILE

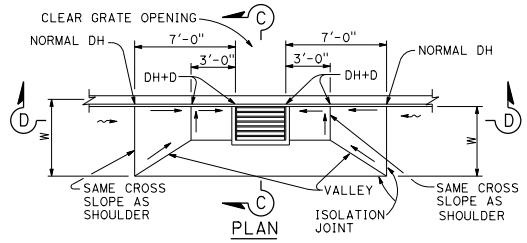

PLAN

TYPE G1 THRU G6 GT3 AND GT4 INLETS IN GRADE SAG

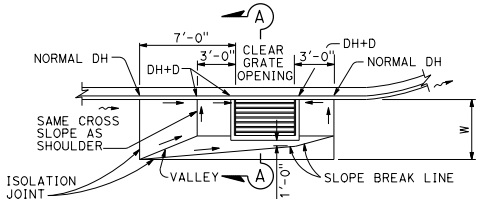

PLAN

TYPE GO AND G1 THRU G6 INLETS ON GRADE

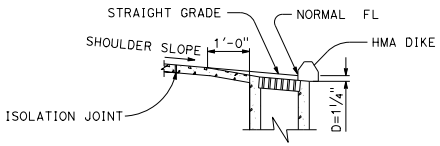

SECTION A-A

(Single grate shown)

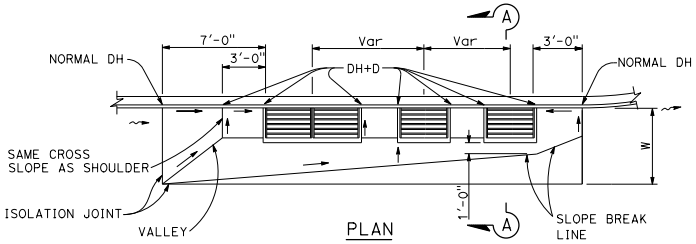

PLAN

GRATE INLET SERIES

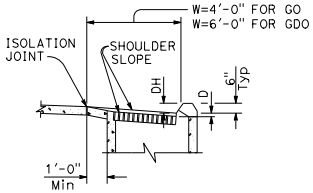

SECTION B-B

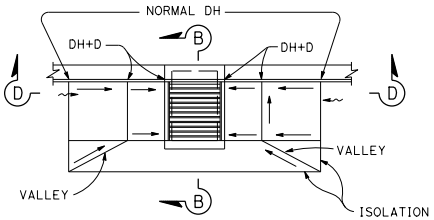

PLAN

TYPE GO AND GDO INLET GRADE SAG

(GDO shown)

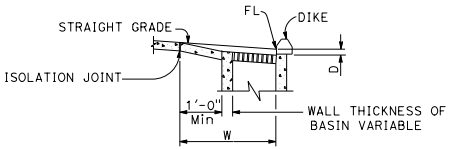

SECTION C-C

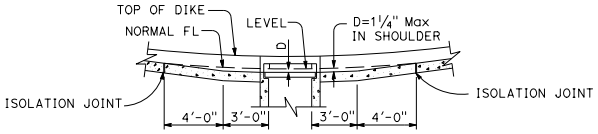

SECTION D-D

NOTES:

1. W = Width of depressed apron. Depressed aprons shall be 4'-0" unless indicated otherwise.

   D = Inlet depression. The Inlet depression shall be 1¼" unless indicated otherwise.

   DH = Dike Height.

   → = Straight grade, downward slope.

   ⇝ = Direction of flow.

2. Apron shall be portland cement concrete and match thickness of adjacent shoulder pavement.
3. Establish curb opening height of Type GO or GDO at midpoint of grate.
4. See Standard Plans P45 and P46 for Isolation Joint Details.

STATE OF CALIFORNIA
DEPARTMENT OF TRANSPORTATION

INLET DEPRESSIONS CONCRETE SHOULDERS

NO SCALE

D78B

2026 STANDARD PLAN D78B

7-1-26

Return to Table of Contents

Dist	COUNTY	ROUTE	POST MILES TOTAL PROJECT	SHEET No.	TOTAL SHEETS

REGISTERED CIVIL ENGINEER

September 18, 2026

PLANS APPROVAL DATE

REGISTERED PROFESSIONAL ENGINEER Sean T. Penders No. C63744 Exp. 9-30-26 CIVIL STATE OF CALIFORNIA

THE STATE OF CALIFORNIA OR ITS OFFICERS OR AGENTS SHALL NOT BE RESPONSIBLE FOR THE ACCURACY OR COMPLETENESS OF SCANNED COPIES OF THIS PLAN SHEET.

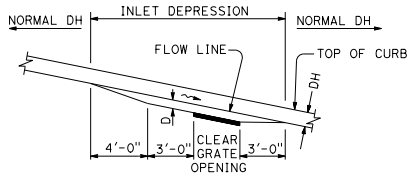

PROFILE

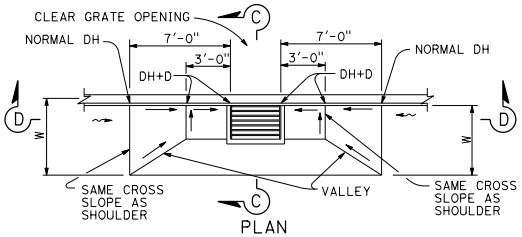

PLAN

TYPE G1 THRU G6 GT3 AND GT4 INLETS IN GRADE SAG

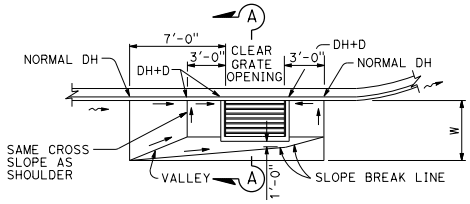

PLAN

TYPE GO AND G1 THRU G6 INLETS ON GRADE

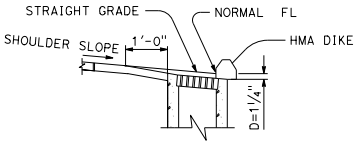

SECTION A-A

(Single grate shown)

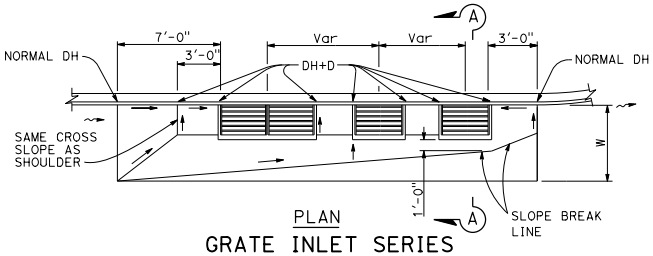

PLAN

GRATE INLET SERIES

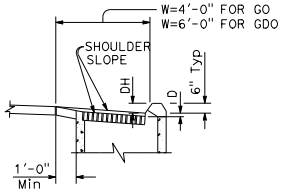

SECTION B-B

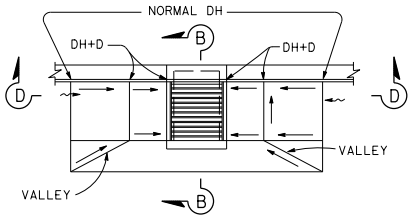

PLAN

TYPE GO AND GDO INLET GRADE SAG

(GDO shown)

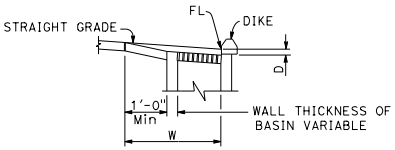

SECTION C-C

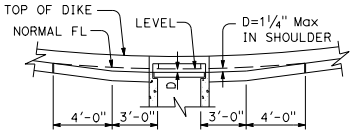

SECTION D-D

NOTES:

1. W = Width of depressed apron. Depressed aprons shall be 4'-0" unless indicated otherwise.

   D = Inlet depression. The Inlet depression shall be 1¼" unless indicated otherwise.

   DH = Dike Height.

   → = Straight grade, downward slope.

   ⇝ = Direction of flow.

2. Apron shall be hot mix asphalt and match thickness of adjacent shoulder pavement.

3. Establish curb opening height of Type GO or GDO at midpoint of grate.

STATE OF CALIFORNIA
DEPARTMENT OF TRANSPORTATION

INLET DEPRESSIONS
HOT MIX ASPHALT SHOULDERS

NO SCALE

D78C

2026 STANDARD PLAN D78C

7-1-26

Return to Table of Contents

Dist	COUNTY	ROUTE	POST MILES TOTAL PROJECT	SHEET No.	TOTAL SHEETS

REGISTERED CIVIL ENGINEER

September 18, 2026

PLANS APPROVAL DATE

REGISTERED PROFESSIONAL ENGINEER — Carl M. Duan — No. C59976 — Exp. 6-30-28 — CIVIL — STATE OF CALIFORNIA

THE STATE OF CALIFORNIA OR ITS OFFICERS OR AGENTS SHALL NOT BE RESPONSIBLE FOR THE ACCURACY OR COMPLETENESS OF SCANNED COPIES OF THIS PLAN SHEET.

WALL A

	ID	†	MINIMUM COVER TO 10'-0" Max COVER									20'-0" Max COVER									40'-0" Max COVER		40'-0" Max COVER	
			METHOD 1			METHOD 2			METHOD 3A			METHOD 1			METHOD 2			METHOD 3A			METHOD 3A		METHOD 3B	
			A_{si}	A_{so}	A_{se}	A_{si}	A_{so}	A_{se}	A_{si}	A_{so}	A_{se}	A_{si}	A_{so}	A_{se}	A_{si}	A_{so}	A_{se}	A_{si}	A_{so}	A_{se}	A_{si}	A_{so}	A_{si}	A_{so}
f'_c = 6 ksi	24"	2½"	0.23	–	0.21	0.16	–	0.16	0.14	–	0.14	0.25	–	0.27	0.17	–	0.18	0.14	–	0.14	0.25	0.20	0.24	0.16
	30"	2¾"	0.29	–	0.27	0.21	–	0.20	0.18	–	0.17	0.40	0.20	0.41	0.25	–	0.23	0.19	–	0.18	0.37	0.25	0.31	0.22
	36"	3"	0.28	0.16	0.31	0.22	0.15	0.22	0.19	0.13	0.20	–	–	–	0.29	0.19	0.29	0.21	0.14	0.23	0.47	0.32	0.37	0.27
	42"	3½"	0.32	0.20	0.36	0.21	0.15	0.22	0.19	0.13	0.21	–	–	–	0.33	0.21	0.33	0.24	0.15	0.27	0.53	0.40	0.42	0.29
	48"	4"	0.44	0.26	0.48	0.20	0.16	0.23	0.20	0.14	0.22	–	–	–	0.37	0.23	0.37	0.28	0.19	0.30	–	–	0.47	0.31
	54"	4½"	0.53	0.31	0.58	0.20	0.16	0.24	0.21	0.14	0.23	–	–	–	0.41	0.25	0.42	0.30	0.23	0.32	–	–	0.57	0.34
	60"	5"	0.59	0.34	0.61	0.22	0.17	0.25	0.22	0.15	0.25	–	–	–	0.46	0.27	0.46	0.32	0.26	0.34	–	–	0.63	0.37
	66"	5½"	0.66	0.39	0.68	0.24	0.17	0.27	0.23	0.16	0.27	–	–	–	0.51	0.29	0.52	0.33	0.27	0.35	–	–	0.65	0.39
	72"	6"	0.68	0.45	0.70	0.26	0.18	0.28	0.24	0.17	0.28	–	–	–	0.56	0.31	0.57	0.34	0.28	0.37	–	–	0.68	0.42
	78"	6½"	0.72	0.50	0.74	0.28	0.19	0.29	0.25	0.17	0.30	–	–	–	0.61	0.34	0.62	0.35	0.28	0.38	–	–	0.74	0.45
	84"	7"	0.74	0.56	0.76	0.30	0.20	0.31	0.27	0.18	0.31	–	–	–	0.67	0.36	0.68	0.37	0.29	0.39	–	–	–	–
	90"	7½"	0.76	0.65	0.78	0.33	0.21	0.34	0.29	0.19	0.32	–	–	–	0.73	0.39	0.74	0.40	0.30	0.41	–	–	–	–
	96"	8"	0.78	0.66	0.81	0.35	0.23	0.36	0.32	0.19	0.33	–	–	–	0.79	0.41	0.80	0.42	0.31	0.43	–	–	–	–
	102"	8½"	0.80	0.68	0.84	0.38	0.24	0.39	0.36	0.20	0.38	–	–	–	0.85	0.44	0.86	0.45	0.32	0.46	–	–	–	–
	108"	9"	0.83	0.70	0.87	0.41	0.26	0.42	0.38	0.21	0.42	–	–	–	–	–	–	0.48	0.34	0.49	–	–	–	–
	114"	9½"	0.86	0.72	0.90	0.44	0.28	0.47	0.40	0.24	0.47	–	–	–	–	–	–	0.51	0.36	0.52	–	–	–	–
	120"	10"	0.89	0.74	0.93	0.53	0.34	0.54	0.44	0.27	0.52	–	–	–	–	–	–	0.54	0.38	0.56	–	–	–	–

WALL AA

	ID	†	40'-0" Max COVER	
			METHOD 3B	
			A_{si}	A_{so}
f'_c = 7 ksi	84"	7"	0.75	0.46
	90"	7½"	0.81	0.49
	96"	8"	0.87	0.52
	102"	8½"	0.93	0.55
	108"	9½"	0.94	0.56
	114"	10½"	0.96	0.57
	120"	11"	1.02	0.60

WALL B

	ID	†	MINIMUM COVER TO 10'-0" Max COVER									20'-0" Max COVER									40'-0" Max COVER		40'-0" Max COVER	
			METHOD 1			METHOD 2			METHOD 3A			METHOD 1			METHOD 2			METHOD 3A			METHOD 3A		METHOD 3B	
			A_{si}	A_{so}	A_{se}	A_{si}	A_{so}	A_{se}	A_{si}	A_{so}	A_{se}	A_{si}	A_{so}	A_{se}	A_{si}	A_{so}	A_{se}	A_{si}	A_{so}	A_{se}	A_{si}	A_{so}	A_{si}	A_{so}
f'_c = 5 ksi	24"	3"	0.18	–	0.16	0.14	–	0.12	0.12	–	0.11	0.22	–	0.25	0.15	–	0.14	0.12	–	0.11	0.21	0.18	0.19	0.12
	30"	3½"	0.27	–	0.19	0.17	–	0.14	0.15	–	0.15	0.30	–	0.27	0.21	–	0.17	0.18	–	0.12	0.25	0.20	0.29	0.14
	36"	4"	0.24	0.14	0.26	0.15	0.09	0.17	0.13	0.08	0.13	0.28	0.15	0.29	0.20	0.12	0.20	0.15	0.09	0.15	0.29	0.23	0.30	0.17
	42"	4½"	0.28	0.17	0.31	0.16	0.09	0.18	0.14	0.08	0.14	0.35	0.18	0.36	0.23	0.14	0.24	0.17	0.11	0.17	0.34	0.25	0.32	0.21
	48"	5"	0.33	0.19	0.38	0.17	0.10	0.19	0.15	0.09	0.16	0.43	0.22	0.44	0.27	0.16	0.27	0.19	0.13	0.20	0.38	0.32	0.35	0.24
	54"	5½"	0.40	0.24	0.44	0.18	0.10	0.20	0.16	0.10	0.17	0.51	0.27	0.52	0.30	0.19	0.31	0.22	0.14	0.22	0.40	0.43	0.42	0.27
	60"	6"	0.47	0.28	0.53	0.20	0.11	0.21	0.18	0.10	0.18	0.60	0.31	0.61	0.34	0.21	0.34	0.25	0.16	0.25	–	–	0.50	0.35
	66"	6½"	0.56	0.33	0.62	0.21	0.13	0.22	0.20	0.12	0.18	–	–	–	0.37	0.23	0.38	0.27	0.18	0.28	–	–	0.58	0.38
	72"	7"	0.61	0.38	0.64	0.23	0.14	0.23	0.21	0.12	0.19	–	–	–	0.41	0.26	0.42	0.30	0.20	0.30	–	–	0.59	0.45
	78"	7½"	0.65	0.45	0.67	0.25	0.15	0.26	0.22	0.12	0.22	–	–	–	0.46	0.28	0.47	0.32	0.22	0.33	–	–	0.60	0.50
	84"	8"	0.67	0.50	0.69	0.28	0.17	0.28	0.23	0.13	0.26	–	–	–	0.52	0.31	–	0.35	0.24	0.36	–	–	–	–
	90"	8½"	0.69	0.52	0.71	0.30	0.18	0.31	0.25	0.16	0.30	–	–	–	0.59	0.33	–	0.38	0.26	0.39	–	–	–	–
	96"	9"	0.71	0.57	0.73	0.33	0.20	0.34	0.29	0.17	0.34	–	–	–	0.65	0.36	–	0.41	0.28	0.42	–	–	–	–
	102"	9½"	0.75	0.68	0.75	0.35	0.22	0.38	0.36	0.20	0.38	–	–	–	0.72	0.39	–	0.44	0.30	0.45	–	–	–	–
	108"	10"	0.76	0.69	0.77	0.38	0.23	0.43	0.38	0.22	0.43	–	–	–	0.79	0.42	–	0.47	0.32	0.48	–	–	–	–
	114"	10½"	0.78	0.70	0.79	0.41	0.25	0.48	0.41	0.24	0.48	–	–	–	–	–	–	0.50	0.34	–	–	–	–	–
	120"	11"	0.80	0.72	0.82	0.49	0.30	0.53	0.45	0.27	0.53	–	–	–	–	–	–	0.53	0.36	–	–	–	–	–

WALL BB

	ID	†	80'-0" Max COVER	
			METHOD 3B	
			A_{si}	A_{so}
f'_c = 6 ksi	24"	5¾"	0.31	0.18
	30"	6"	0.33	0.22
	36"	6½"	0.39	0.36
	42"	7½"	0.48	0.45
	48"	8½"	0.57	0.55
	54"	10"	0.61	0.58
f'_c = 7 ksi	60"	11"	0.63	0.61
	66"	11½"	0.65	0.63
	72"	12½"	0.73	0.71
	78"	13½"	0.80	0.78
	84"	14¾"	0.83	0.81
	90"	16"	0.86	0.84
	96"	17¼"	0.90	0.88

NOTES:

1. For details of the method of excavation, backfill and bedding (Method 1, Method 2, etc.), see Standard Plan A62D.
2. The tables for minimum allowable classes and D-loads of RCP on Standard Plan A62D shall not apply to direct design RCP.
3. Notes 3, 9 and 10 on Standard Plan A62D shall apply to direct design RCP.
4. Throughout the length of any given culvert, the direct design selected by the Contractor shall be the same, including the method of excavation, backfill and bedding.
5. The embankment height prior to excavation specified in note 5 of the Standard Plan A62D shall apply to the direct design RCP installation when Method 2, 3A or 3B are used.
6. For single circular cage reinforcement, minimum clearance shall be 40% of the wall thickness (t). For elliptical and double circular cage reinforcement where the wall thickness (t) is less than 2½", the minimum clearance (Clr) for reinforcement shall be ¾", and where the wall thickness (t) is 2½" or more, the minimum clearance (Clr) for reinforcement shall be 1".
7. Minimum cover measured at the Edge of Traveled Way (ETW) shall be 2'-0" to top of HMA or existing AC pavement and 1'-0" to bottom of rigid pavement.
8. Cover greater than the table maximum requires a special design.

WALL X

	ID	†	Min COVER TO 10'-0" Max COVER						20'-0" Max COVER						30'-0" Max COVER				
			METHOD 3A			METHOD 3B			METHOD 3A			METHOD 3B			METHOD 3A			METHOD 3B	
			A_{si}	A_{so}	A_{se}	A_{si}	A_{so}	A_{se}	A_{si}	A_{so}	A_{se}	A_{si}	A_{so}	A_{se}	A_{si}	A_{so}		A_{si}	A_{so}
f'_c = 6 ksi	24"	1⅞"	0.19	–	0.19	0.18	–	0.18	0.19	–	0.19	0.18	–	0.18	0.22	0.17		0.18	0.15
	30"	2⅛"	0.23	–	0.21	0.22	–	0.20	0.23	–	0.21	0.22	–	0.20	0.23	0.19		0.20	0.17
	36"	2⅜"	0.23	0.17	0.25	0.21	0.16	0.22	0.23	0.17	0.23	0.21	0.16	0.22	0.25	0.21		0.21	0.18
	42"	2¾"	0.26	0.19	0.27	0.24	0.18	0.25	0.26	0.19	0.26	0.24	0.18	0.25	0.35	0.27		0.26	0.24
	48"	2⅞"	0.28	0.21	0.28	0.26	0.20	0.27	0.28	0.21	0.28	0.26	0.20	0.27	0.43	0.33		0.30	0.28
	54"	3¼"	0.29	0.22	0.31	0.27	0.20	0.29	0.29	0.21	0.30	0.27	0.20	0.29	0.47	0.34		0.32	0.29
	60"	3½"	0.30	0.23	0.32	0.28	0.21	0.31	0.30	0.24	0.30	0.27	0.21	0.29	0.56	0.42		0.40	0.33
	66"	3¾"	0.31	0.24	0.34	0.29	0.21	0.33	0.36	0.27	0.37	0.28	0.24	0.30	0.66	0.50		0.48	0.39
	72"	4¼"	0.33	0.24	0.36	0.31	0.22	0.35	0.37	0.27	0.37	0.30	0.24	0.32	0.68	0.52		0.48	0.40
	78"	4¾"	0.34	0.25	0.38	0.32	0.23	0.37	0.37	0.27	0.38	0.32	0.24	0.33	0.70	0.53		0.49	0.41
	84"	5¼"	0.36	0.25	0.39	0.33	0.24	0.38	0.38	0.28	0.39	0.33	0.24	0.36	0.71	0.55		0.50	0.41
	90"	5¾"	0.37	0.26	0.40	0.34	0.24	0.39	0.39	0.30	0.40	0.34	0.26	0.37	0.73	0.57		0.52	0.42
	96"	6"	0.38	0.27	0.42	0.36	0.25	0.40	0.43	0.31	0.44	0.36	0.28	0.38	0.77	0.58		0.55	0.42
	102"	6½"	0.40	0.29	0.43	0.38	0.26	0.42	0.48	0.34	0.49	0.38	0.30	0.39	0.84	0.60		0.62	0.43
	108"	7"	0.41	0.29	0.45	0.40	0.26	0.44	0.53	0.36	0.54	0.39	0.32	0.41	–	–		0.68	0.46
	114"	7½"	0.42	0.30	0.47	0.41	0.27	0.45	0.57	0.38	0.58	0.42	0.34	0.45	–	–		0.75	0.50
	120"	8"	0.43	0.31	0.50	0.43	0.27	0.50	0.62	0.41	0.64	0.45	0.36	0.50	–	–		0.81	0.53

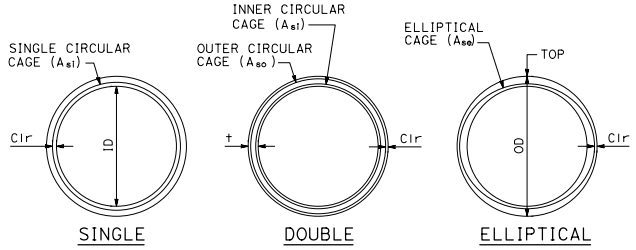

CAGE REINFORCEMENT

† = Pipe barrel wall thickness, inches

A_{si} = Inner cage reinforcement, or single circular cage reinforcement, square inches/LF

A_{so} = Outer cage reinforcement, square inches/LF

A_{se} = Elliptical single cage reinforcement, square inches/LF

Clr = Design clearance, inches (see Note 6)

DESIGN NOTES:

Design: AASHTO LRFD Bridge Design Specifications, 8th edition with California Amendments. DIRECT DESIGN METHOD

Earth Loading: Paris/Uniform Soil Pressure Distribution
Vertical: 140 pcf
Horizontal: Varies, see design lateral pressure chart (Circular Pipe only)

Unit Stresses: (Used in Design Tables)
f_y = 65 ksi
f'_c = See Tables

The RCP as shown on this sheet is not intended to be used in a corrosive environment. A special design may be required.

STATE OF CALIFORNIA
DEPARTMENT OF TRANSPORTATION

PRECAST REINFORCED CONCRETE PIPE DIRECT DESIGN METHOD

NO SCALE

D79

2026 STANDARD PLAN D79

7-1-26

Return to Table of Contents

Dist	COUNTY	ROUTE	POST MILES TOTAL PROJECT	SHEET No.	TOTAL SHEETS

REGISTERED CIVIL ENGINEER

September 18, 2026
PLANS APPROVAL DATE

REGISTERED PROFESSIONAL ENGINEER Carl M. Duan No. C59976 Exp. 6-30-28 CIVIL STATE OF CALIFORNIA

THE STATE OF CALIFORNIA OR ITS OFFICERS OR AGENTS SHALL NOT BE RESPONSIBLE FOR THE ACCURACY OR COMPLETENESS OF SCANNED COPIES OF THIS PLAN SHEET.

WALL B

f'c	ID	t	MINIMUM COVER TO 10'-0" Max COVER									20'-0" Max COVER								
			INSTALLATION TYPE 1			INSTALLATION TYPE 2			INSTALLATION TYPE 3			INSTALLATION TYPE 1			INSTALLATION TYPE 2			INSTALLATION TYPE 3		
			A_{si}	A_{so}	A_{se}	A_{si}	A_{so}	A_{se}	A_{si}	A_{so}	A_{se}	A_{si}	A_{so}	A_{se}	A_{si}	A_{so}	A_{se}	A_{si}	A_{so}	A_{se}
f'c = 6 ksi	24"	3"	0.17	–	0.16	0.19	–	0.17	0.21	–	0.19	0.17	–	0.16	0.19	–	0.17	0.21	–	0.19
	30"	3½"	0.21	–	0.17	0.22	–	0.18	0.25	–	0.21	0.21	–	0.17	0.22	–	0.18	0.25	–	0.24
	36"	4"	0.17	0.09	0.18	0.18	0.10	0.19	0.21	0.11	0.22	0.17	0.09	0.18	0.21	0.11	0.22	0.28	0.16	0.30
	42"	4½"	0.18	0.09	0.19	0.21	0.12	0.23	0.22	0.12	0.23	0.19	0.10	0.19	0.25	0.14	0.26	0.36	0.19	0.36
	48"	5"	0.19	0.10	0.20	0.24	0.14	0.27	0.23	0.13	0.24	0.22	0.12	0.23	0.29	0.16	0.31	0.44	0.23	0.45
	54"	5½"	0.20	0.11	0.22	0.29	0.17	0.32	0.24	0.14	0.25	0.25	0.14	0.28	0.33	0.20	0.37	0.52	0.28	0.53
	60"	6"	0.21	0.12	0.23	0.34	0.20	0.38	0.25	0.15	0.27	0.29	0.17	0.32	0.40	0.23	0.44	–	–	–
	66"	6½"	0.21	0.13	0.24	0.41	0.24	0.45	0.32	0.19	0.35	0.36	0.22	0.40	0.48	0.28	0.53	–	–	–
	72"	7"	0.22	0.14	0.25	0.49	0.29	0.54	0.37	0.22	0.41	0.43	0.25	0.47	0.57	0.34	0.63	–	–	–
	78"	7½"	0.23	0.15	0.26	0.57	0.34	0.63	0.42	0.25	0.47	0.50	0.30	0.55	0.66	0.39	0.66	–	–	–
	84"	8"	0.26	0.16	0.31	0.64	0.38	0.69	0.48	0.29	0.54	0.57	0.34	0.63	0.69	0.45	–	–	–	–
	90"	8½"	0.34	0.21	0.38	0.69	0.41	0.72	0.54	0.33	0.61	0.63	0.37	0.70	0.72	0.51	–	–	–	–
	96"	9"	0.39	0.24	0.44	0.70	0.45	0.74	0.61	0.36	0.68	0.70	0.41	0.74	–	–	–	–	–	–
	102"	9½"	0.48	0.29	0.49	0.72	0.54	0.76	0.73	0.44	0.74	0.75	0.50	0.78	–	–	–	–	–	–
	108"	10"	0.57	0.30	0.55	0.75	0.65	0.79	0.76	0.53	0.80	0.77	0.60	0.80	–	–	–	–	–	–
	114"	10½"	0.66	0.31	0.60	0.78	0.76	0.81	0.80	0.62	0.83	0.79	0.69	0.82	–	–	–	–	–	–
	120"	11"	0.75	0.31	0.66	0.81	0.86	0.83	0.84	0.72	0.86	0.81	0.79	0.84	–	–	–	–	–	–

WALL BB

f'c	ID	t	40'-0" Max COVER INSTALLATION TYPE 1	
			A_{si}	A_{so}
f'c = 6 ksi	24"	3"	0.22	0.13
	30"	3½"	0.27	0.14
	36"	4"	0.33	0.17
	42"	4½"	0.42	0.22
	48"	5"	0.52	0.27
	54"	5¾"	0.54	0.29
	60"	6½"	0.57	0.34
	66"	7¼"	0.60	0.38
	72"	8½"	0.62	0.40
	78"	9½"	0.64	0.42
	84"	10¼"	0.65	0.43
f'c = 7 ksi	90"	10½"	0.66	0.44
	96"	10¾"	0.79	0.46
	102"	11¾"	0.80	0.48
	108"	12¼"	0.88	0.53
	114"	13¼"	0.90	0.55
	120"	14"	0.93	0.56

WALL C

f'c	ID	t	MINIMUM COVER TO 10'-0" Max COVER									20'-0" Max COVER								
			INSTALLATION TYPE 1			INSTALLATION TYPE 2			INSTALLATION TYPE 3			INSTALLATION TYPE 1			INSTALLATION TYPE 2			INSTALLATION TYPE 3		
			A_{si}	A_{so}	A_{se}	A_{si}	A_{so}	A_{se}	A_{si}	A_{so}	A_{se}	A_{si}	A_{so}	A_{se}	A_{si}	A_{so}	A_{se}	A_{si}	A_{so}	A_{se}
f'c = 5 ksi	24"	3¾"	0.15	–	0.12	0.15	–	0.13	0.18	–	0.14	0.15	–	0.12	0.15	–	0.13	0.18	–	0.14
	30"	4¼"	0.18	–	0.14	0.19	–	0.14	0.21	–	0.16	0.18	–	0.14	0.19	–	0.14	0.25	–	0.19
	36"	4¾"	0.14	0.07	0.14	0.15	0.08	0.16	0.17	0.09	0.17	0.14	0.07	0.14	0.18	0.09	0.18	0.23	0.12	0.23
	42"	5¼"	0.15	0.07	0.16	0.16	0.09	0.17	0.18	0.10	0.20	0.16	0.08	0.16	0.21	0.11	0.22	0.27	0.14	0.28
	48"	5¾"	0.16	0.07	0.17	0.19	0.10	0.21	0.19	0.11	0.21	0.19	0.10	0.19	0.25	0.13	0.25	0.32	0.17	–
	54"	6¼"	0.17	0.08	0.18	0.21	0.12	0.23	0.20	0.12	0.22	0.22	0.11	0.22	0.28	0.15	0.29	0.40	0.21	–
	60"	6¾"	0.18	0.09	0.19	0.24	0.15	0.27	0.22	0.15	0.24	0.25	0.14	0.26	0.32	0.18	0.33	0.49	0.25	–
	66"	7¼"	0.22	0.11	0.20	0.31	0.19	0.34	0.25	0.16	0.28	0.28	0.17	0.31	0.37	0.23	–	–	–	–
	72"	7¾"	0.24	0.15	0.26	0.36	0.21	0.40	0.31	0.19	0.34	0.34	0.20	0.37	0.44	0.26	–	–	–	–
	78"	8¼"	0.28	0.18	0.31	0.42	0.24	0.47	0.36	0.22	0.41	0.40	0.23	0.44	0.51	0.30	–	–	–	–
	84"	8¾"	0.32	0.18	0.35	0.50	0.30	0.56	0.43	0.25	0.47	0.47	0.28	0.52	0.62	0.37	–	–	–	–
	90"	9¼"	0.38	0.23	0.41	0.59	0.35	0.66	0.51	0.30	0.56	0.56	0.33	0.62	0.65	0.44	–	–	–	–
	96"	9¾"	0.42	0.25	0.47	0.65	0.42	0.68	0.59	0.35	0.65	0.64	0.40	0.65	0.68	0.51	–	–	–	–
	102"	10¼"	0.44	0.27	0.54	0.67	0.50	0.70	0.68	0.40	0.71	0.67	0.47	0.69	–	–	–	–	–	–
	108"	10¾"	0.46	0.28	0.60	0.69	0.59	0.72	0.71	0.50	0.73	0.69	0.55	–	–	–	–	–	–	–
	114"	11¼"	0.47	0.31	0.67	0.71	0.68	0.74	0.73	0.59	0.75	0.71	0.64	–	–	–	–	–	–	–
	120"	11¾"	0.49	0.35	0.73	0.73	0.77	0.76	0.75	0.59	0.77	0.73	0.73	–	–	–	–	–	–	–

WALL CC

f'c	ID	t	80'-0" Max COVER INSTALLATION TYPE 1	
			A_{si}	A_{so}
f'c = 6 ksi	24"	6½"	0.21	0.19
	30"	7½"	0.35	0.30
	36"	8½"	0.45	0.42
	42"	10¼"	0.49	0.45
f'c = 7 ksi	48"	10½"	0.52	0.49
	54"	11½"	0.60	0.58
	60"	12¾"	0.65	0.63
	66"	14½"	0.68	0.67
	72"	16½"	0.70	0.68
	78"	18"	0.73	0.72
	84"	19½"	0.76	0.75
	90"	20¾"	0.80	0.79
	96"	22½"	0.82	0.81

WALL X

f'c	ID	t	10'-0" Max COVER INSTALLATION TYPE 1			20'-0" Max COVER INSTALLATION TYPE 1		
			A_{si}	A_{so}	A_{se}	A_{si}	A_{so}	A_{se}
f'c = 6 ksi	24"	2"	0.25	0.16	0.25	0.25	0.16	0.25
	30"	2⅜"	0.26	0.16	0.26	0.26	0.16	0.26
	36"	2¾"	0.31	0.20	0.32	0.31	0.20	0.32
	42"	3"	0.32	0.21	0.34	0.41	0.25	0.44
	48"	3½"	0.33	0.22	0.35	0.46	0.27	0.51
	54"	3¾"	0.34	0.24	0.36	0.54	0.28	0.55
	60"	4¼"	0.35	0.26	0.38	0.56	0.29	0.57
	66"	4¾"	0.36	0.27	0.40	0.59	0.31	0.60
	72"	5¼"	0.38	0.28	0.42	0.62	0.32	0.63
	78"	5¾"	0.39	0.28	0.43	0.66	0.34	0.67
	84"	6¼"	0.41	0.29	0.44	0.70	0.36	0.71
	90"	7"	0.42	0.31	0.46	0.71	0.37	0.73
	96"	7½"	0.44	0.32	0.48	0.72	0.38	0.74
	102"	8"	0.45	0.32	0.50	0.77	0.40	0.79
	108"	8½"	0.47	0.33	0.51	0.82	0.43	–
	114"	9¼"	0.49	0.34	0.52	0.85	0.44	–
	120"	9¾"	0.50	0.35	0.54	0.87	0.45	–

NOTES:

1. For details of the method of excavation, backfill and bedding (Installation Type 1, Installation Type 2, etc.), see Standard Plan A62DA.
2. The tables for minimum allowable classes and D-loads of RCP on Standard Plan A62DA shall not apply to direct design RCP.
3. Notes 3 and 7 on Standard Plan A62DA shall apply to direct design RCP.
4. Throughout the length of any given culvert, the direct design selected by the Contractor shall be the same, including the method of excavation, backfill and bedding.
5. For single circular cage reinforcement, minimum clearance shall be 40% of the wall thickness (t). For elliptical and double circular cage reinforcement where the wall thickness (t) is less than 2½", the minimum clearance (Clr) for reinforcement shall be ¾", and where the wall thickness (t) is 2½" or more, the minimum clearance (Clr) for reinforcement shall be 1".
6. Minimum cover measured at the Edge of Traveled Way (ETW) shall be 2'-0" to top of HMA or existing AC pavement and 1'-0" to bottom of rigid pavement.
7. Cover greater than the table maximum requires a special design.

DESIGN NOTES:

Design: AASHTO LRFD Bridge Design Specifications, 8th edition with California Amendments. DIRECT DESIGN METHOD

Earth Loading: Heger Soil Pressure Distribution
γ = 140 pcf
VAF & HAF modification factor = 0.86

Unit Stresses: (Used in Design Tables)
f_y = 65 ksi
f'_c = See Tables

The RCP as shown on this sheet is not intended to be used in a corrosive environment. A special design may be required.

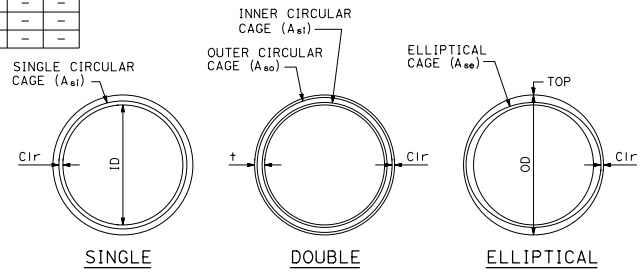

CAGE REINFORCEMENT

t = Pipe barrel wall thickness, inches

A_{si} = Inner cage reinforcement, or single circular cage reinforcement, square inches/LF

A_{so} = Outer cage reinforcement, square inches/LF

A_{se} = Elliptical single cage reinforcement, square inches/LF

Clr = Design clearance, inches (see Note 5)

STATE OF CALIFORNIA
DEPARTMENT OF TRANSPORTATION

PRECAST REINFORCED CONCRETE PIPE DIRECT DESIGN METHOD

NO SCALE

D79A

7-1-26

2026 STANDARD PLAN D79A

Return to Table of Contents

SPAN, S		4′						5′								6′								7′								8′								
HEIGHT, H		2′		3′		4′		2′		3′		4′		5′		3′		4′		5′		6′		3′		4′		5′		6′		7′		4′		5′		6′		7′		8′	
MAXIMUM EARTH COVER		10′	20′	10′	20′	10′	20′	10′	20′	10′	20′	10′	20′	10′	20′	10′	20′	10′	20′	10′	20′	10′	20′	10′	20′	10′	20′	10′	20′	10′	20′	10′	20′	10′	20′	10′	20′	10′	20′	10′	20′	10′	20′
Conc	ROOF T_1	7½"	7"	8"	7"	8"	7"	8"	8"	8"	8"	7½"	8"	8"	8"	8"	9"	8½"	9½"	8"	9"	8"	9"	9"	11"	9"	11"	9"	10½"	9"	10½"	8½"	10½"	9½"	12½"	9½"	11½"	9½"	11½"	9"	11½"	9"	11½"
	WALLS T_2	6"	6"	6"	6"	7"	7"	6"	6"	6½"	6½"	7"	7½"	7"	9"	7"	7"	7"	7½"	7½"	9"	8½"	10½"	6½"	7"	6½"	7½"	7"	9½"	8½"	10½"	10"	12"	6½"	8"	7"	9½"	8½"	11"	10"	12"	11"	13½"
	INVERT T_3	7"	7"	7"	7½"	7"	7½"	7½"	8"	7½"	8"	7½"	9"	7½"	9½"	8"	10"	8"	10½"	8"	10½"	8"	10"	8"	11½"	8"	10½"	8"	11"	8"	11½"	8½"	11"	8½"	13"	8½"	13"	8½"	12"	8½"	13"	8½"	12"
Reinf	"a" SIZE BAR	#5	#5	#5	#5	#4	#5	#5	#5	#5	#5	#5	#5	#5	#5	#5	#6	#5	#5	#5	#5	#5	#5	#5	#6	#5	#6	#5	#6	#5	#6	#5	#5	#6	#6	#6	#6	#6	#6	#5	#6	#5	#6
	"a" SPACING	6"	5"	6"	5"	5"	5"	5½"	4½"	5"	4½"	5"	4½"	5"	5"	5"	5"	5"	4½"	4½"	4½"	5"	4½"	4½"	5"	4½"	5"	4½"	5"	4½"	5"	5"	4½"	5"	4½"	5"	4½"	5"	4½"	4½"	5"	4½"	5"
	"b" SIZE BAR	#4	#5	#4	#5	#5	#5	#5	#5	#5	#5	#5	#5	#5	#5	#5	#5	#5	#5	#5	#6	#5	#5	#5	#5	#5	#5	#6	#5	#6	#5	#6	#6	#5	#5	#6	#5	#6	#5	#9	#5	#9	#6
	"b" SPACING	5½"	6"	6"	6"	6"	4½"	5"	4½"	6"	5½"	6"	5½"	4½"	5½"	5½"	4½"	6"	5"	5"	5½"	5"	4½"	5"	4½"	5"	5"	5"	5"	4½"	5"	4½"	5"	4½"	4½"	5"	4½"	4½"	4½"	4½"	4½"	4½"	4½"
	"e" SIZE BAR	#4	#4	#4	#4	#4	#4	#4	#4	#4	#4	#4	#4	#4	#4	#4	#4	#4	#4	#4	#4	#4	#4	#4	#4	#4	#4	#4	#4	#4	#4	#4	#4	#4	#4	#4	#4	#4	#4	#4	#4	#4	#5
	"e" SPACING	13½"	13½"	13½"	13½"	9"	7"	13½"	13½"	13½"	13½"	12"	11"	6½"	7½"	12½"	12½"	12"	11"	9"	8½"	6½"	6"	13½"	12½"	11"	11"	9"	8"	7"	7"	6"	5"	11"	10"	9"	8"	7½"	6½"	7"	6"	5"	7"
DIMENSION "B" ft-inch		2-4	2-0	2-4	2-1	2-4	2-6	2-6	2-1	2-7	2-4	2-9	2-8	2-9	2-10	2-9	2-3	2-9	2-4	3-0	2-11	3-4	3-1	2-11	2-6	2-11	2-9	3-5	2-11	3-6	3-3	3-7	3-7	3-1	2-9	3-4	2-8	3-7	3-3	5-8	3-6	5-9	3-10
QUANTITIES	CONCRETE CF/LF	8.0	7.8	9.3	9.0	11.1	10.9	9.8	10.0	11.1	11.4	12.4	13.9	13.8	17.0	13.1	14.8	14.5	17.1	15.9	19.7	18.4	22.8	14.7	18.8	15.8	19.8	17.4	23.3	20.4	26.5	23.9	30.1	18.0	25.2	19.6	27.5	22.6	30.3	25.8	34.4	29.0	38.1
	REINFORCEMENT LB/LF	79	84	84	96	104	127	107	110	112	114	123	128	154	140	126	147	132	139	159	153	206	186	145	162	155	169	203	186	232	205	245	244	193	197	229	210	262	234	491	242	527	309
** SOIL PRESSURE (ksf), Ser		2.4	3.5	2.4	3.5	2.4	3.5	2.1	3.5	2.1	3.5	2.1	3.6	2.1	3.6	1.9	3.5	1.9	3.6	1.9	3.6	2.0	3.7	1.9	3.6	1.9	3.6	1.9	3.6	2.0	3.7	2.0	3.7	1.9	3.6	1.9	3.7	2.0	3.7	2.0	3.7	2.0	3.8
** SOIL PRESSURE (ksf), Str		3.9	4.5	3.0	4.5	3.9	4.6	3.3	4.5	3.3	4.5	3.3	4.6	3.4	4.7	2.9	4.6	2.9	4.6	3.0	4.7	3.0	4.7	2.6	4.6	2.6	4.6	2.7	4.7	2.7	4.8	2.7	4.8	2.5	4.7	2.5	4.7	2.5	4.8	2.6	4.8	2.6	4.9

SPAN, S		10′										12′										14′																					
HEIGHT, H		5′		6′		7′		8′		9′		10′		6′		7′		8′		9′		10′		11′		12′		7′		8′		9′		10′		11′		12′		13′		14′	
MAXIMUM EARTH COVER		10′	20′	10′	20′	10′	20′	10′	20′	10′	20′	10′	20′	10′	20′	10′	20′	10′	20′	10′	20′	10′	20′	10′	20′	10′	20′	10′	20′	10′	20′	10′	20′	10′	20′	10′	20′	10′	20′	10′	20′	10′	20′
Conc	ROOF T_1	10"	15"	9½"	14"	9½"	13½"	9½"	14"	10"	15"	10"	15"	11½"	17"	11½"	16½"	11½"	16"	11"	16"	11½"	17"	11½"	17½"	12"	18"	13"	19½"	13"	19"	13"	17½"	13"	18"	13"	19"	13½"	20"	13½"	19½"	13½"	20½"
	WALLS T_2	8½"	10"	8½"	11½"	10"	12½"	11½"	14"	12"	15½"	13½"	16½"	9"	12"	10½"	13"	11½"	14½"	12½"	16"	14"	16½"	15"	18"	16½"	20"	9½"	13½"	11½"	15"	12½"	16½"	14"	16½"	15½"	16½"	16½"	19½"	18"	22"	19½"	24½"
	INVERT T_3	10"	15"	10"	15"	10"	15"	10"	15½"	10"	16"	10½"	15"	11"	17½"	11"	17½"	11"	17"	11"	17"	11½"	16"	12"	19"	12½"	20"	12½"	19½"	12½"	19½"	12½"	19"	12½"	19"	12½"	20"	13"	21"	13½"	22"	14"	21½"
Reinf	"a" SIZE BAR	#6	#7	#6	#7	#6	#7	#6	#6	#6	#6	#5	#6	#7	#7	#7	#7	#7	#7	#7	#7	#6	#7	#6	#6	#6	#6	#8	#8	#7	#8	#7	#8	#7	#8	#7	#7	#6	#7	#6	#7	#6	#7
	"a" SPACING	4½"	5"	4½"	5"	5"	5"	5"	4½"	5"	4½"	4½"	4½"	5"	4½"	5"	4½"	5"	4½"	5"	4½"	4½"	5"	4½"	4½"	4½"	4½"	5"	5"	4½"	5"	4½"	5"	5"	5"	5"	4½"	4½"	4½"	4½"	5"	4½"	5"
	"b" SIZE BAR	#5	#5	#6	#6	#6	#6	#7	#5	#7	#6	#7	#6	#6	#6	#6	#6	#7	#6	#7	#6	#7	#7	#7	#6	#7	#6	#7	#6	#7	#6	#7	#6	#7	#6	#8	#6	#8	#6	#8	#6	#8	#7
	"b" SPACING	4½"	4½"	5"	5"	4½"	5"	5"	4½"	4½"	5"	4½"	4½"	4½"	5	4½"	5"	4½"	5"	4½"	5"	4½"	5"	4½"	4½"	4½"	4½"	4½"	4½"	5"	4½"	4½"	4½"	4½"	4½"	5"	4½"	5"	4½"	5"	5"	5"	4½"
	"e" SIZE BAR	#4	#4	#4	#4	#4	#4	#4	#4	#4	#5	#5	#5	#4	#4	#4	#4	#4	#5	#4	#5	#4	#5	#5	#5	#5	#6	#4	#4	#4	#5	#4	#5	#4	#5	#5	#5	#5	#5	#5	#6	#6	#6
	"e" SPACING	9½"	7½"	8½"	6"	7½"	5½"	6"	5"	5"	6½"	6"	5"	8½"	6"	7"	5½"	6"	7½"	5½"	6½"	5"	6½"	5½"	5"	4½"	6"	7½"	5"	6"	7"	5½"	6½"	5"	6½"	7"	5"	5½"	4½"	4½"	6"	5½"	5"
DIMENSION "B" ft-inch		3-10	3-10	3-9	3-3	4-0	3-6	4-9	4-5	4-9	4-11	4-10	4-7	4-3	4-1	4-3	4-1	5-0	4-3	5-3	5-1	5-3	6-2	5-4	5-6	5-4	5-7	4-8	4-6	5-0	4-5	5-4	5-0	5-8	5-4	6-5	5-9	6-5	5-11	6-6	6-10	6-6	6-11
QUANTITIES	CONCRETE CF/LF	26.1	37.5	27.1	40.3	30.6	43.3	34.7	49.0	38.0	55.8	43.4	59.4	34.3	52.3	38.0	55.3	41.4	59.0	44.6	64.3	50.8	68.1	55.9	78.6	63.1	88.6	44.2	68.6	49.2	72.9	52.9	75.7	58.0	79.1	63.7	84.7	70.0	97.9	77.3	108.8	85.0	120.5
	REINFORCEMENT LB/LF	251	284	285	318	307	338	375	313	418	375	425	404	381	381	382	397	469	418	497	455	488	534	526	479	548	515	526	492	498	512	550	540	560	563	652	562	651	596	691	674	730	753
** SOIL PRESSURE (ksf), Ser		2.0	3.7	2.0	3.7	2.0	3.8	2.0	3.8	2.1	3.9	2.1	3.9	2.2	3.8	2.3	3.8	2.3	3.8	2.3	3.9	2.3	3.9	2.4	4.0	2.5	4.1	2.2	3.9	2.3	3.9	2.3	3.9	2.3	3.9	2.4	4.0	2.4	4.1	2.5	4.1	2.5	4.2
** SOIL PRESSURE (ksf), Str		2.5	4.8	2.5	4.8	2.6	4.9	2.6	4.9	2.7	5.0	2.7	5.1	3.0	4.9	3.0	4.9	3.1	5.0	3.1	5.0	3.2	5.1	3.2	5.2	3.3	5.3	3.0	5.0	3.1	5.0	3.1	5.0	3.1	5.1	3.2	5.1	3.2	5.3	3.3	5.3	3.4	5.4

Dist	COUNTY	ROUTE	POST MILES TOTAL PROJECT	SHEET No.	TOTAL SHEETS

REGISTERED CIVIL ENGINEER

September 18, 2026

PLANS APPROVAL DATE

REGISTERED PROFESSIONAL ENGINEER — Carl M. Duan — No. C59976 — Exp. 6-30-28 — CIVIL — STATE OF CALIFORNIA

THE STATE OF CALIFORNIA OR ITS OFFICERS OR AGENTS SHALL NOT BE RESPONSIBLE FOR THE ACCURACY OR COMPLETENESS OF SCANNED COPIES OF THIS PLAN SHEET.

NOTES:

1. For boxes with span or height less than any of those shown in table, use next greater size box concrete dimensions and reinforcement. Make necessary changes in bar lengths and quantities.
2. Quantities are approximate and for design purposes only.
3. For boxes with span or height or cover greater than those shown in tables, a special design is required.
4. It is permissible to eliminate the 180° hooks on every other "a" bar.
5. Provide paving notch when top is exposed and when pavement is concrete, and adjust quantities.
6. For design and details not shown, see Standard Plan D82.
7. Soil pressures shown are per AASHTO LRFD BDS and include soil weight of fill over box, self weight of box, and live load where applicable.
8. Stagger rebars for wall thickness less than 8".
9. 2" concrete cover are typical except as shown.

"i" BARS, FOR EARTH COVERS UP TO AND INCLUDING 10′-0"								
SPAN	4′	5′	6′	7′	8′	10′	12′	14′
NUMBER	7	8	9	10	11	12	15	20

NOTE: For earth cover over 10′-0", use #4 @ 12 Max spacing for "i" bars.

** SEE NOTE 7

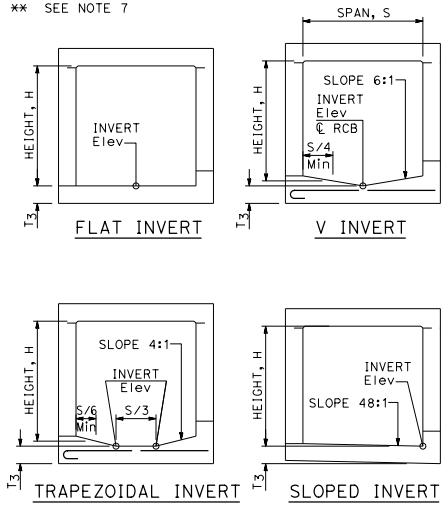

ALTERNATIVE INVERTS

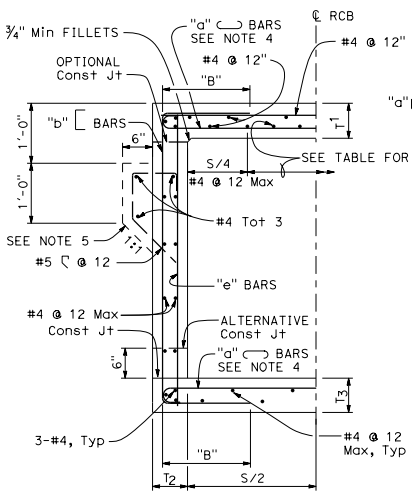

TYPICAL SECTION
SPANS 4′ THRU 8′

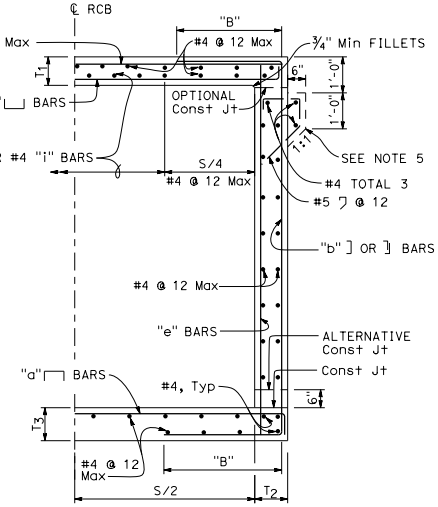

TYPICAL SECTION
SPANS 10′ THRU 14′

STATE OF CALIFORNIA
DEPARTMENT OF TRANSPORTATION

CAST-IN-PLACE REINFORCED CONCRETE SINGLE BOX CULVERT

NO SCALE

D80

2026 STANDARD PLAN D80

7-1-26

Return to Table of Contents

SPAN, S		4′				5′					6′					7′					8′				
HEIGHT, H		2′	3′	4′		2′	3′	4′		5′	3′	4′	5′	6′		3′	4′	5′	6′	7′	4′	5′	6′	7′	8′
MAXIMUM EARTH COVER		10′ 20′	10′ 20′	10′ 20′		10′ 20′	10′ 20′	10′ 20′		10′ 20′	10′ 20′	10′ 20′	10′ 20′	10′ 20′		10′ 20′	10′ 20′	10′ 20′	10′ 20′	10′ 20′	10′ 20′	10′ 20′	10′ 20′	10′ 20′	10′ 20′
Conc	ROOF T_1	8" 8½"	8" 8½"	8" 8½"		7½" 10"	7½" 10"	8" 10"		8" 10"	7½" 12"	7½" 11½"	8" 11½"	8" 11½"		9" 13½"	8½" 13½"	8½" 13"	8½" 13"	8½" 13"	10" 15"	9½" 15"	9½" 14½"	9½" 14½"	9½" 14½"
	WALLS T_2	6" 6½"	6½" 7"	7" 8"		6" 6½"	6½" 7½"	7½" 8"		8" 9½"	6½" 7½"	7" 8½"	7½" 10"	8½" 11"		6½" 7½"	7½" 8"	7½" 9½"	8½" 11"	9½" 13"	6½" 8"	7½" 9½"	8½" 11½"	9½" 13"	11" 15"
	INVERT T_3	7" 9½"	7" 9½"	7" 9½"		7½" 11"	7½" 11"	8" 11"		8" 11"	8½" 12½"	8½" 12½"	8½" 13"	8½" 12½"		9½" 14"	9½" 14"	9½" 14"	9½" 14½"	10½" 15½"	10½" 15½"	10½" 15½"	10½" 16"	10½" 16"	10½" 16"
REINFORCEMENT	"a" SIZE BAR	#4 #4	#4 #4	#4 #4		#5 #4	#5 #4	#5 #4		#5 #4	#5 #4	#5 #4	#5 #4	#5 #4		#5 #4	#5 #4	#5 #5	#5 #5	#5 #5	#5 #5	#5 #5	#5 #5	#5 #5	#5 #5
	SPACING	5" 5½"	5" 5½"	5" 5½"		5½" 5½"	5½" 5½"	6" 5½"		6" 5½"	5½" 5"	5½" 5"	5" 5"	5" 5"		5½" 6"	5" 6"	6" 5"	6" 5½"	6" 5½"	5½" 5½"	5½" 5½"	5½" 5½"	5½" 5½"	5½" 6½"
	"b" SIZE BAR	#4 #4	#4 #4	#4 #5		#4 #4	#4 #4	#4 #4		#5 #4	#5 #4	#4 #4	#5 #4	#5 #5		#5 #4	#5 #4	#5 #5	#5 #6	#5 #5	#5 #5	#5 #5	#5 #5	#5 #5	#6 #5
	SPACING	5½" 6½"	6" 6"	6½" 6"		5" 5½"	5½" 6"	5½" 5½"		5½" 5"	5½" 6"	5" 5½"	5" 5"	4½" 5"		5" 5"	6" 5"	5" 5"	5" 5½"	6" 5"	5" 7"	5" 6"	5½" 5½"	5" 5½"	5" 5½"
	"e" SIZE BAR	#4 #4	#4 #4	#4 #4		#4 #4	#4 #4	#4 #4		#4 #4	#4 #4	#4 #4	#4 #4	#4 #4		#4 #4	#4 #4	#4 #4	#4 #4	#4 #4	#4 #4	#4 #4	#4 #4	#4 #4	#4 #4
	SPACING	13½" 13½"	13½" 12½"	9½" 9½"		13½" 13½"	13½" 11"	11" 10"		8½" 8"	13½" 11"	12½" 9½"	9" 7½"	7" 6½"		13½" 11"	11" 10"	10½" 8"	8" 6½"	6" 5½"	13" 10"	11" 8"	9" 6"	7" 5½"	5½" 7"
	*"f" SIZE BAR	#5 #5	#5 #6	#6 #6		#6 #6	#6 #6	#6 #6		#6 #6	#7 #6	#7 #6	#7 #6	#7 #6		#7 #7	#7 #7	#7 #7	#7 #7	#7 #6	#7 #7	#7 #7	#7 #7	#7 #7	#7 #7
	SPACING	4½" 4½"	4½" 5"	5" 4½"		4½" 5"	4½" 5"	5" 5"		6" 5"	5" 4½"	5" 4½"	5" 5"	5" 4½"		5" 5"	5" 5"	5" 5"	5" 5"	4½" 5"	5" 5"	5" 5"	5" 5"	5" 5"	5" 5"
	*"h" SIZE BAR	#4 #4	#4 #4	#4 #4		#4 #4	#4 #4	#4 #4		#4 #4	#4 #4	#4 #4	#4 #4	#4 #4		#5 #4	#4 #4	#4 #4	#4 #4	#4 #4	#4 #4	#4 #4	#4 #4	#4 #4	#4 #4
	SPACING	6" 13½"	7½" 13½"	8" 13½"		6" 13½"	6" 13½"	6" 13½"		6½" 13½"	5" 13½"	5½" 13½"	6" 13½"	6" 13½"		5½" 13½"	5½" 13½"	5½" 13½"	6" 13½"	6½" 13½"	6½" 13½"	6½" 13½"	7" 13½"	7" 13½"	7½" 13½"
	DIM "B" ft-inch	2-8 2-6	2-8 2-7	2-10 2-8		2-10 2-9	2-10 2-10	2-11 2-10		3-3 3-1	3-1 3-2	3-1 3-3	3-3 3-2	3-6 3-8		3-4 3-5	3-5 3-5	3-5 3-7	3-8 3-8	3-10 4-1	3-8 3-8	3-8 3-11	3-9 3-11	4-0 4-1	4-5 4-5
	DIM "Bm" ft-inch	2-5 2-10	2-9 2-10	2-10 2-10		2-11 3-0	2-11 3-1	3-0 3-1		3-2 3-2	3-8 3-3	3-8 3-4	3-9 3-5	3-10 3-5		3-10 4-0	3-11 4-0	3-10 3-10	3-1 3-10	4-2 3-10	4-1 4-3	4-2 4-4	4-2 4-5	4-5 4-6	4-5 4-7
QUANTITIES	CONCRETE CF/LF	14.9 17.5	16.7 19.5	18.8 22.1		17.4 23.4	19.2 25.8	22.7 28.0		25.0 31.6	22.9 33.3	24.9 35.5	27.7 39.8	30.6 43.3		28.8 41.4	30.6 44.3	32.4 47.3	35.4 50.8	38.7 57.6	36.4 52.7	38.3 56.4	41.4 61.3	44.7 66.1	49.2 72.3
	REINFORCEMENT LB/LF	145 131	157 156	205 158		212 169	221 182	224 196		261 215	268 209	287 232	333 244	362 297		327 264	333 276	355 311	377 338	406 348	373 339	388 367	399 395	429 414	509 441
** SOIL PRESSURE (ksf), Ser		1.8 3.5	1.9 3.5	1.9 3.5		2.1 3.5	2.2 3.5	2.2 3.6		2.2 3.6	2.2 3.6	2.2 3.6	2.2 3.6	2.2 3.7		2.2 3.6	2.2 3.6	2.2 3.6	2.3 3.7	2.3 3.7	2.2 3.7	2.3 3.7	2.3 3.7	2.3 3.8	2.3 3.8
** SOIL PRESSURE (ksf), Str		2.9 4.4	2.9 4.5	2.9 4.5		2.9 4.5	2.9 4.5	2.9 4.5		2.9 4.6	2.9 4.5	2.9 4.6	2.9 4.6	3.0 4.6		2.9 4.6	2.9 4.6	3.0 4.6	3.0 4.6	3.0 4.7	3.0 4.6	3.0 4.7	3.0 4.7	3.0 4.7	3.0 4.8

SPAN, S		10′					12′					14′				
HEIGHT, H		5′	6′	7′	8′	9′	10′	6′	7′	8′	9′	10′	11′	12′	7′	8′	9′	10′	11′	12′	13′	14′
MAXIMUM EARTH COVER		10′ 20′	10′ 20′	10′ 20′	10′ 20′	10′ 20′	10′ 20′	10′ 20′	10′ 20′	10′ 20′	10′ 20′	10′ 20′	10′ 20′	10′ 20′	10′ 20′	10′ 20′	10′ 20′	10′ 20′	10′ 20′	10′ 20′	10′ 20′	10′ 20′
Conc	ROOF T_1	12" 19"	12" 18½"	11½" 18½"	11½" 18½"	11½" 18½"	11½" 18"	13½" 22"	13½" 22"	13½" 22"	13" 22"	13" 21½"	14½" 21½"	14½" 21½"	16½" 25½"	16½" 25½"	16½" 25"	16" 25"	16" 24½"	16" 24½"	16" 24½"	15½" 24½"
	WALLS T_2	8½" 10"	8½" 11½"	10" 12½"	11" 14"	11½" 15½"	13" 16½"	8½" 11½"	10" 13"	11" 14½"	12" 16"	13" 16½"	14½" 17½"	16" 19½"	10" 13"	11" 14½"	12" 16½"	13½" 16½"	14½" 17½"	16" 19½"	16½" 21"	19" 23½"
	INVERT T_3	10½" 19"	10½" 19"	10½" 19"	10½" 19"	11" 19½"	11" 19½"	12½" 22"	12" 22"	12" 22½"	12" 22½"	12½" 22½"	13½" 23"	13½" 22½"	15" 25"	15" 25½"	15" 25½"	15" 25½"	15" 25½"	15" 26"	15" 26"	15½" 26"
REINFORCEMENT	"a" SIZE BAR	#5 #5	#5 #5	#5 #5	#5 #5	#5 #5	#5 #5	#5 #6	#5 #6	#5 #6	#5 #6	#5 #6	#5 #6	#5 #6	#5 #6	#5 #6	#5 #6	#5 #6	#5 #6	#5 #6	#5 #6	#5 #6
	SPACING	5" 5"	5" 5"	5" 5"	5" 5"	5" 5"	5" 5"	4½" 5½"	4½" 5½"	4½" 5½"	4½" 5½"	4½" 5½"	5" 5½"	5½" 5½"	4½" 5"	4½" 5"	4½" 5"	4½" 5"	4½" 5"	4½" 5"	4½" 5"	4½" 5"
	"b" SIZE BAR	#5 #5	#5 #5	#5 #6	#5 #6	#5 #7	#5 #7	#5 #5	#5 #5	#6 #5	#7 #5	#7 #5	#7 #5	#7 #6	#5 #6	#5 #6	#5 #6	#6 #6	#6 #6	#6 #7	#6 #7	#6 #7
	SPACING	5½" 6"	4½" 5½"	5" 6½"	4½" 5½"	5" 5½"	4½" 4½"	5" 4½"	4½" 4½"	5" 4½"	5" 4½"	5" 4½"	5" 4½"	4½" 5"	5" 6"	5" 5½"	4½" 5½"	5" 5½"	4½" 5½"	5" 5½"	4½" 5½"	4½" 4½"
	"e" SIZE BAR	#4 #4	#4 #4	#4 #4	#4 #4	#4 #5	#5 #5	#4 #4	#4 #4	#4 #5	#4 #5	#4 #5	#5 #5	#5 #5	#4 #4	#4 #4	#4 #5	#4 #5	#5 #5	#5 #6	#5 #5	#6 #6
	SPACING	9½" 7½"	9½" 6½"	7½" 5½"	6½" 5"	5" 7"	6½" 6"	9½" 6"	7½" 5½"	6½" 7½"	6" 6½"	5" 6"	6½" 5"	5½" 4½"	7½" 5½"	6½" 7½"	6" 6½"	5" 6½"	7" 5½"	6" 5"	4½" 4½"	6" 5½"
	"f" SIZE BAR	#9 #7	#9 #7	#9 #7	#9 #7	#8 #7	#8 #7	#9 #8	#9 #8	#9 #8	#9 #8	#9 #8	#8 #8	#8 #8	#9 #8	#9 #8	#9 #8	#9 #8	#9 #8	#9 #8	#9 #8	#8 #8
	SPACING *	4½" 4½"	4½" 4½"	4½" 4½"	4½" 4½"	4½" 4½"	4½" 4½"	4½" 5"	4½" 5"	4½" 5"	4½" 5"	4½" 5"	4½" 5"	4½" 5"	5" 4½"	5" 4½"	5" 4½"	5" 4½"	5" 4½"	5" 4½"	5" 4½"	4½" 4½"
	"h" SIZE BAR	#4 #4	#4 #4	#4 #4	#4 #4	#4 #4	#4 #4	#4 #4	#4 #4	#4 #4	#4 #4	#4 #4	#4 #4	#4 #4	#4 #4	#4 #4	#4 #4	#4 #4	#4 #4	#4 #4	#4 #4	#4 #4
	SPACING	7½" 10"	7½" 10"	8" 10"	8" 10"	8" 10"	8½" 10"	7" 10"	7½" 10"	7½" 10"	8" 10"	8" 10"	8" 10"	8" 10"	10" 10"	10" 10"	10" 9½"	10" 9"	10" 9½"	10" 9½"	10" 9½"	10" 9½"
	DIM "B" ft-inch	4-3 4-5	4-3 4-7	4-3 4-7	4-4 4-7	4-6 4-9	4-8 5-0	4-10 5-2	4-10 5-2	4-10 5-3	4-10 5-3	4-10 5-2	5-4 5-9	5-4 5-11	5-4 5-9	5-6 5-10	5-7 5-9	5-7 6-0	5-9 5-11	5-10 6-2	6-1 6-5	6-2 6-7
	DIM "Bm" ft-inch	5-10 4-9	5-10 4-9	5-10 4-10	6-1 4-11	6-3 5-0	5-7 5-2	6-3 5-9	6-4 5-10	6-4 5-11	6-4 6-0	6-6 6-0	6-1 6-2	6-1 6-4	6-8 6-3	6-9 6-4	6-9 6-5	6-10 6-5	7-0 6-6	7-2 6-7	7-3 6-10	5-7 6-11
QUANTITIES	CONCRETE CF/LF	51.8 82.4	53.9 86.1	57.3 90.4	61.3 95.9	65.6 102.9	71.2 107.4	69.0 113.0	72.3 118.2	76.3 125.1	79.6 131.4	85.4 134.7	97.1 141.7	103.8 149.4	96.0 149.6	100.1 156.8	104.5 163.0	109.0 166.4	114.2 171.0	121.0 180.0	125.6 189.5	135.9 201.3
	REINFORCEMENT LB/LF	614 465	642 491	690 512	727 532	715 557	773 608	733 671	766 692	817 718	886 744	919 764	861 804	921 881	804 833	824 874	856 901	921 920	968 950	1046 984	1126 1041	1107 1114
** SOIL PRESSURE (ksf), Ser		2.2 3.9	2.3 3.9	2.3 3.9	2.3 3.9	2.3 4.0	2.4 4.0	2.2 4.0	2.3 4.0	2.3 4.0	2.3 4.0	2.3 4.1	2.4 4.1	2.4 4.1	2.3 4.1	2.3 4.1	2.3 4.1	2.3 4.1	2.3 4.1	2.3 4.2	2.4 4.2	2.4 4.3
** SOIL PRESSURE (ksf), Str		2.9 4.9	3.0 4.9	3.0 5.0	3.0 5.0	3.0 5.0	3.0 5.0	2.9 5.0	2.9 5.0	2.9 5.0	3.0 5.1	3.0 5.1	3.0 5.1	3.0 5.2	2.9 5.1	2.9 5.1	2.9 5.2	2.9 5.2	2.9 5.2	3.0 5.2	3.0 5.3	3.0 5.3

* See Note 5
** See Note 8

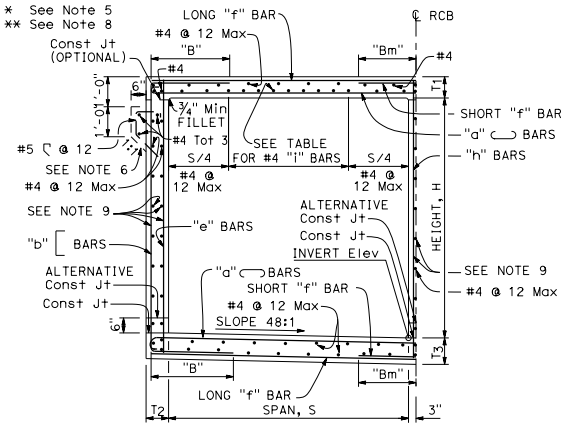

TYPICAL SECTION SPANS 4′ THRU 8′

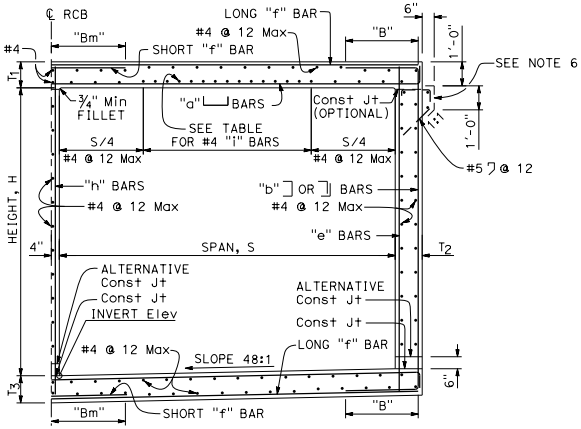

TYPICAL SECTION SPANS 10′ THRU 14′

Dist	COUNTY	ROUTE	POST MILES TOTAL PROJECT	SHEET No.	TOTAL SHEETS

REGISTERED CIVIL ENGINEER

September 18, 2026
PLANS APPROVAL DATE

REGISTERED PROFESSIONAL ENGINEER — Carl M. Duan — No. C59976 — Exp. 6-30-28 — CIVIL — STATE OF CALIFORNIA

THE STATE OF CALIFORNIA OR ITS OFFICERS OR AGENTS SHALL NOT BE RESPONSIBLE FOR THE ACCURACY OR COMPLETENESS OF SCANNED COPIES OF THIS PLAN SHEET.

NOTES:

1. For boxes with span or height less than any of those shown in table, use next greater size box concrete dimensions and reinforcement. Make necessary changes in bar lengths and quantities.
2. For boxes with span or height or cover greater than those shown in tables, a special design is required.
3. Quantities are approximate and for design purposes only.
4. It is permissible to eliminate the 180° hooks on every other "a" bar.
5. Spacing shown is between long and short "f" bars.
6. Provide paving notch when top is exposed and when pavement is concrete, and adjust quantities.
7. For design and details not shown, see Standard Plan D82.
8. Soil pressures shown are per AASHTO LRFD BDS and include soil weight of fill over box, self weight of box, and live load where applicable.
9. Stagger rebars for wall thickness less than 8".
10. 2" concrete cover are typical except as shown.

"i" BARS, FOR EARTH COVERS UP TO AND INCLUDING 10′-0"							
SPAN	4′	5′	6′	7′	8′	10′	12′	14′
NUMBER	5	6	8	10	13	14	16	19

NOTE: For earth cover over 10′-0", use #4 @ 12 Max spacing for "i" bars.

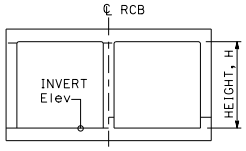

FLAT INVERT ALTERNATIVE

STATE OF CALIFORNIA
DEPARTMENT OF TRANSPORTATION

CAST-IN-PLACE REINFORCED CONCRETE DOUBLE BOX CULVERT

NO SCALE

D81

2026 STANDARD PLAN D81

7-1-26

Return to Table of Contents

Dist	COUNTY	ROUTE	POST MILES TOTAL PROJECT	SHEET No.	TOTAL SHEETS

REGISTERED CIVIL ENGINEER

September 18, 2026
PLANS APPROVAL DATE

Carl M. Duan
No. C59976
Exp. 6-30-28
CIVIL
STATE OF CALIFORNIA
REGISTERED PROFESSIONAL ENGINEER

THE STATE OF CALIFORNIA OR ITS OFFICERS OR AGENTS SHALL NOT BE RESPONSIBLE FOR THE ACCURACY OR COMPLETENESS OF SCANNED COPIES OF THIS PLAN SHEET.

DESIGN NOTES:

Design Specifications:
AASHTO LRFD Bridge Design Specifications, 8th Edition and CA Amendments.

Loading:
Live load: (AASHTO LRFD 3.6.1.2) and CA Amendments 3.6.1.8:
HL-93 design truck or design tandem
P15 Permit Design Vehicle

Impact Factor: (Apply to roof slab only)
$IM = 33(1.0-0.125D_E) \geq 0\%$ (AASHTO LRFD 3.6.2.2)
D_E = minimum depth of earth cover

Earth load:
Earth pressure for two conditions:
140 pcf vertical, 36 pcf horizontal
140 pcf vertical, 120 pcf horizontal

Load Factors:
AASHTO-CA BDS-8 Table 3.4.1.1 & Table 3.4.1.2

Unit stresses:
f'_c = 3600 psi
f_y = 60,000 psi

Distribution "i" bars:
Up to and including 10'-0" cover
Express as a percentage of main positive reinforcement required: $\frac{100}{\sqrt{S}}$, Max 50%,
Over 10'-0" cover, # 4 @ 12 maximum

Shear:
For Slabs less than 16" thick and fill ≥ 2'-0"
$V_c = \{0.0676\lambda\sqrt{f'_c}+4.6\frac{A_s}{bd_e}\frac{Vud_e}{Mu}\}bd_e \leq 0.126\lambda\sqrt{f'_c}bd_e$(Kips)
V_c shall not be less than $0.0948\lambda\sqrt{f'_c}bd_e$ for frame
For all other members
$Vc = 0.0316\beta\lambda\sqrt{f'_c}bd_v$(kips)
β = 2.0 for members less than 16" thick
= based on iterative θ and β method for all other cases

Control of cracking by distribution of reinforcement:
Class 2 exposure environment Service Limit State

CONSTRUCTION NOTES:

Construction loads:
Strutting required as shown on Standard Plan D88. Strutting may be required on culvert extensions when existing parapet is removed.

Expansion joints:
Invert:
No expansion joints shall be permitted.

Roof and Walls:
When cover is less than span length-
Place ½" premolded expansion joint filler at 30'-0" ± centers outside the paved roadway lanes and place Bridge Detail 3-2, Standard Plan B0-3, at 30'-0" centers under paved roadway lanes.
When cover is more than span length-
Place ½" premolded expansion joint filler at 30'-0"± centers and additional ½" premolded expansion joints at locations of change in foundation character, as directed by the Engineer.

Construction joints:
Temporary joints may be permitted if normal (or radial) to ℄ of RCB. Otherwise, the contractor is to submit a proposal for consideration.

Cutoff walls:
4'-0" cutoff walls are to be provided at inlet and/or outlet unless adjacent channel is lined and unless otherwise shown. These walls are to be extended if scour conditions warrant.

Earthwork:
See Standard Plan A62E.

Backfill:
See Standard Specifications, except that the difference in level of backfill (against outside walls) shall not exceed 2'-0".

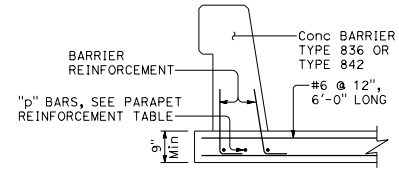

BARRIER SECTION (30'-0" MINIMUM)

GENERAL NOTES:

Designation:
Standard single or multiple box culverts are shown on plans as span times height with maximum cover over roof thus: 8' x 5' RCB with 10' or double 10' x 5' RCB with 20', followed by alternatives.

Alternatives:
Single cell: Invert will be sloped unless "trapezoidal invert", "flat invert", or "V invert" is included in designation.
Multiple cell: Invert will be vee unless "flat invert" is specified. Ends of culvert will be rounded unless "square ends" are designated. Parapets will be as shown unless designated in plans. Such designations may be different for inlet and outlet ends.

Quantities:
Quantities do not include the following:
- Concrete for parapet, paving notches, and cut-off wall.
- Reinforcement for 2% splices, parapets, paving notches, cut-off wall, and additional required bars for exposed top slab.

Reinforcement placement:
Main reinforcement is to be placed transversely or, for curved culverts, radially. When radial, reinforcing spacing of the "a" and "f" bars is measured along the centerline. Stagger splices not shown. Hooks may be rotated or tilted, as necessary, for clearance.

Special reinforcement coverage:
Box standard plans are not to be used for culverts in a corrosive environment or where there is a severe abrasive flow condition or in freeze-thaw locations.

Special design:
Required for culverts with conditions, loads, design bearing pressures, or sizes greater than those given on this plan or Standard Plans D80 AND D81. Also required for multiple cell culverts with unequal spans. For culverts with railroad loading, see the current AREMA design specification.

Three or more cells:
For culverts with more than two cells, use dimensions and reinforcement for the standard "double box culvert". Reduce spacing of "f" bars and "b" bars by ½" and adjust quantities accordingly.

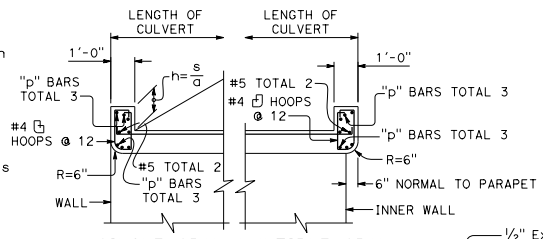

SINGLE SPAN MULTIPLE SPAN

PARAPET DETAIL

s = Clear span (ft)
a = 12 cosine skew angle
h = Height, 1'-0" Min

PARAPET "p" BARS			
SPAN	SKEW ANGLE		
	0° TO 15°	16° TO 30°	31° TO 45°
4'-0"	#4	#4	#4
6'-0"	#4	#4	#5
8'-0"	#4	#5	#6
10'-0"	#5	#6	#7
12'-0"	#6	#7	#8
14'-0"	#7	#8	#9

PARAPET REINFORCEMENT

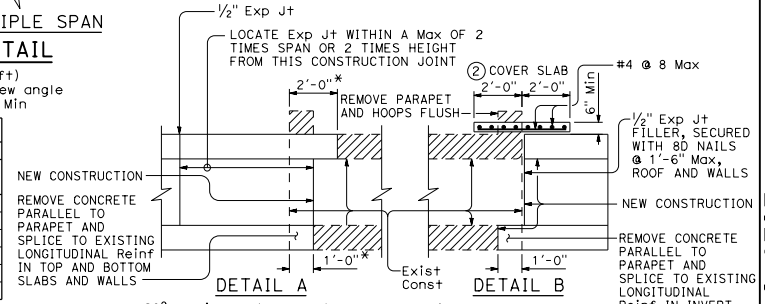

DETAIL A

20° maximum skew as shown. If existing longitudinal and transverse reinforcing bars in top slab are lap spliced with new longitudinal and transverse reinforcing bars, the 20° skew may be exceeded. Lap splicing may require removal of top slab in excess of 2'-0" shown.

DETAIL B

Single cell only, no skew allowed, 1'-0" minimum cover.

* Measured perpendicular to parapet

② Cover slab is anchored to the existing buried top slab by two #5 drill and bond dowel bars in 4" holes.

CULVERT EXTENSION

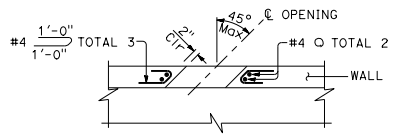

PART PLAN-SECTION

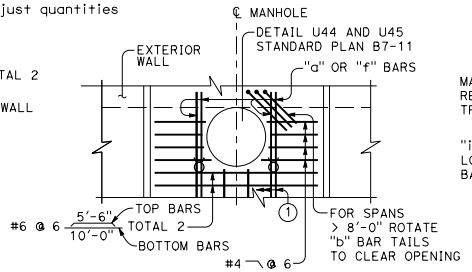

PART PLAN

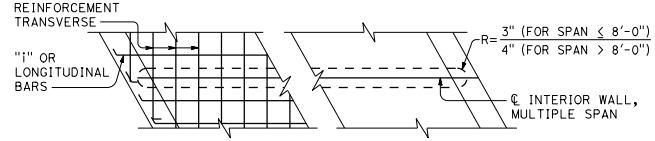

PART PLAN-SKEWED

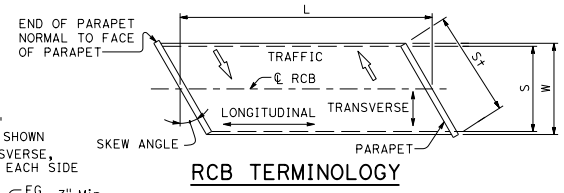

RCB TERMINOLOGY

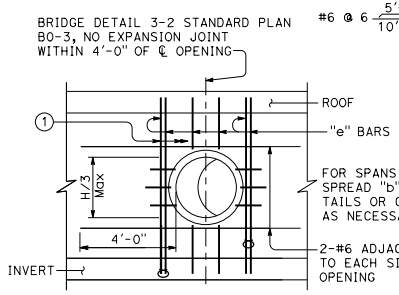

LONGITUDINAL SECTION

UTILITY OPENING-WALL

H=Height of box

① Adjacent to each side of the opening, place additional bars equivalent to half the interrupted main reinforcement.

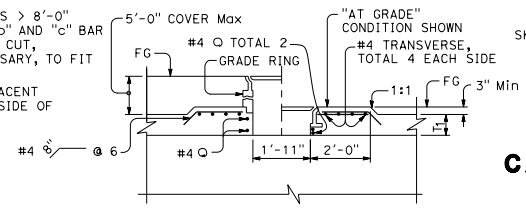

PART LONGITUDINAL SECTION

MANHOLE

STATE OF CALIFORNIA
DEPARTMENT OF TRANSPORTATION

CAST-IN-PLACE REINFORCED CONCRETE BOX CULVERT MISCELLANEOUS DETAILS

NO SCALE

D82

2026 STANDARD PLAN D82

7-1-26

Return to Table of Contents

Dist	COUNTY	ROUTE	POST MILES TOTAL PROJECT	SHEET No.	TOTAL SHEETS

REGISTERED CIVIL ENGINEER

September 18, 2026
PLANS APPROVAL DATE

REGISTERED PROFESSIONAL ENGINEER Carl M. Duan No. C59976 Exp. 6-30-28 CIVIL STATE OF CALIFORNIA

THE STATE OF CALIFORNIA OR ITS OFFICERS OR AGENTS SHALL NOT BE RESPONSIBLE FOR THE ACCURACY OR COMPLETENESS OF SCANNED COPIES OF THIS PLAN SHEET.

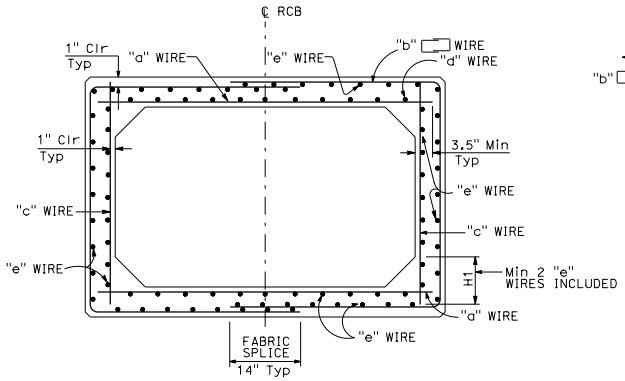

TYPICAL SECTION - SPANS 4'-0" THRU 12'-0"

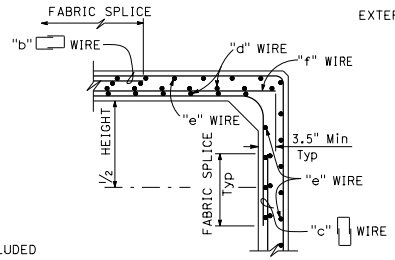

ALTERNATIVE DETAILING OPTION

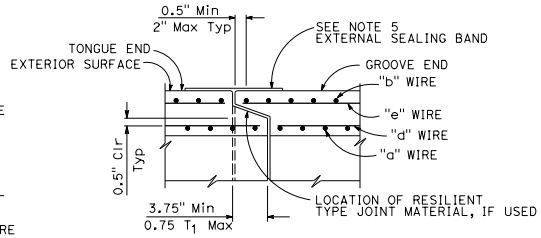

END JOINT DETAIL

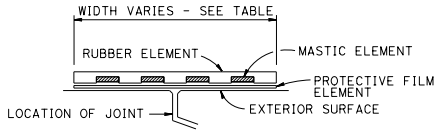

EXTERNAL SEALING BAND SCHEMATIC

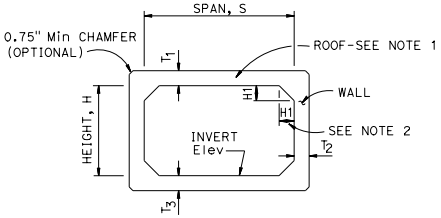

SCHEMATIC

TABLE	
SPAN	EXTERNAL SEALING BAND WIDTH, Min
4'-6'	9"
7'-8'	11"
10'-12'	13"

SPAN, S			4'						5'								6'								7'									
HEIGHT, H			2'		3'		4'		2'		3'		4'		5'		3'		4'		5'		6'		3'		4'		5'		6'		7'	
MAXIMUM EARTH COVER			10'	20'	10'	20'	10'	20'	10'	20'	10'	20'	10'	20'	10'	20'	10'	20'	10'	20'	10'	20'	10'	20'	10'	20'	10'	20'	10'	20'	10'	20'	10'	20'
CONCRETE (INCH)	ROOF	T_1	6"	6"	6"	6"	6"	6"	6"	6"	6"	6"	6"	6"	6"	6"	7"	7"	7"	7"	7"	7"	7"	7"	8"	8"	8"	8"	8"	8"	8"	8"	8"	8"
	SIDE WALL	T_2	6"	6"	6"	6"	6"	6"	6"	6"	6"	6"	6"	6"	6"	6"	7"	7"	7"	7"	7"	7"	7"	7"	8"	8"	8"	8"	8"	8"	8"	8"	8"	8"
	INVERT	T_3	6"	6"	6"	6"	6"	6"	6"	6"	6"	6"	6"	6"	6"	6"	7"	7"	7"	7"	7"	7"	7"	7"	8"	8"	8"	8"	8"	8"	8"	8"	8"	8"
MINIMUM WELDED WIRE FABRIC ($inch^2/ft$)		"a"	.33	.47	.34	.49	.34	.50	.40	.62	.41	.62	.42	.64	.43	.64	.44	.67	.45	.70	.46	.71	.47	.72	.47	.72	.48	.75	.50	.78	.50	.79	.51	.80
		"b"	.23	.28	.23	.25	.21	.23	.26	.36	.24	.36	.24	.33	.24	.30	.28	.44	.27	.40	.27	.37	.27	.38	.33	.52	.31	.48	.30	.45	.30	.43	.30	.48
		"c"	.11	.11	.11	.12	.18	.24	.11	.11	.11	.11	.13	.23	.24	.34	.11	.11	.11	.12	.19	.27	.27	.42	.11	.11	.11	.11	.13	.20	.26	.31	.30	.50
		"d"	.16	.11	.16	.11	.16	.11	.17	.11	.18	.11	.18	.11	.18	.11	.17	.11	.18	.11	.18	.11	.18	.11	.17	.11	.17	.11	.18	.11	.18	.11	.18	.11
		"e"	.11	.11	.11	.11	.11	.11	.11	.11	.11	.11	.11	.11	.11	.11	.11	.11	.11	.11	.11	.11	.11	.11	.11	.11	.11	.11	.11	.11	.11	.11	.11	.11
		"f"	.22	.36	.23	.37	.22	.26	.29	.51	.30	.51	.29	.41	.26	.30	.33	.56	.34	.58	.27	.44	.21	.30	.36	.61	.37	.64	.37	.57	.25	.48	.21	.30
* QUANTITY	Conc	CY/LF	.31		.34		.38		.37		.41		.44		.48		.51		.56		.60		.64		.63		.68		.73		.78		.83	
	Reinf	LB/LF	35	41	39	45	45	51	49	58	49	62	54	69	62	78	60	79	64	83	72	93	80	107	72	98	76	102	81	110	92	120	101	143
** SOIL PRESSURE (ksf)			2.3	4.4	2.4	4.5	2.4	4.5	3.1	4.4	3.1	4.5	3.1	4.5	3.2	4.5	2.7	4.5	2.8	4.5	2.8	4.6	2.8	4.6	2.5	4.5	2.5	4.6	2.5	4.6	2.5	4.6	2.6	4.6

SPAN, S			8'								10'								12'													
HEIGHT, H			4'		5'		6'		7'		8'		5'		6'		7'		8'		9'		10'		6'		7'		8'		9'		10'	
MAXIMUM EARTH COVER			10'	20'	10'	20'	10'	20'	10'	20'	10'	20'	10'	20'	10'	20'	10'	20'	10'	20'	10'	20'	10'	20'	10'	20'	10'	20'	10'	20'	10'	20'	10'	20'
CONCRETE (INCH)	ROOF	T_1	8.5"	8.5"	8.5"	8.5"	8.5"	8.5"	8.5"	8.5"	8.5"	8.5"	10"	10"	10"	10"	10"	10"	10"	10"	10"	10"	10"	10"	12"	12"	12"	12"	12"	12"	12"	12"	12"	12"
	SIDE WALL	T_2	8.5"	8.5"	8.5"	8.5"	8.5"	8.5"	8.5"	8.5"	8.5"	8.5"	10"	10"	10"	10"	10"	10"	10"	10"	10"	10"	10"	10"	12"	12"	12"	12"	12"	12"	12"	12"	12"	12"
	INVERT	T_3	8.5"	8.5"	8.5"	8.5"	8.5"	8.5"	8.5"	8.5"	8.5"	8.5"	10"	10"	10"	10"	10"	10"	10"	10"	10"	10"	10"	10"	12"	12"	12"	12"	12"	12"	12"	12"	12"	12"
MINIMUM WELDED WIRE FABRIC ($inch^2/ft$)		"a"	.55	.87	.56	.90	.57	.92	.58	.93	.58	.94	.66	1.07	.67	1.10	.69	1.13	.70	1.14	.70	1.16	.71	1.16	.73	1.21	1.21	1.24	.77	1.27	1.24	1.29	1.27	1.31
		"b"	.37	.59	.35	.55	.33	.52	.33	.52	.36	.57	.45	.74	.43	.70	.41	.67	.40	.64	.43	.67	.48	.67	.51	.85	.85	.81	.49	.77	.81	.74	.77	.77
		"c"	.11	.11	.11	.11	.20	.31	.31	.42	.38	.62	.11	.11	.11	.11	.22	.31	.36	.42	.40	.62	.54	.86	.11	.11	.11	.11	.23	.30	.37	.42	.42	.60
		"d"	.19	.11	.19	.11	.20	.11	.20	.11	.20	.11	.20	.11	.20	.11	.21	.11	.21	.11	.21	.11	.21	.11	.20	.11	.20	.11	.21	.11	.22	.11	.22	.11
		"e"	.11	.11	.11	.11	.11	.11	.11	.11	.11	.11	.11	.11	.11	.11	.11	.11	.11	.11	.11	.11	.11	.11	.11	.11	.11	.11	.11	.11	.11	.11	.11	.11
		"f"	.44	.76	.45	.79	.37	.61	.27	.52	.20	.31	.55	.96	.56	.99	.47	.81	.34	.73	.31	.53	.16	.30	.62	1.10	1.10	1.13	.64	.97	1.13	.87	.97	.71
* QUANTITY	Conc	CY/LF	.78		.83		.88		.94		.99		1.10		1.17		1.23		1.29		1.35		1.41		1.56		1.63		1.70		1.78		1.85	
	Reinf	LB/LF	93	129	97	133	105	148	117	161	131	189	133	191	138	196	148	212	191	225	176	253	201	282	174	255	179	261	191	279	207	293	223	323
** SOIL PRESSURE (ksf)			2.5	4.6	2.5	4.6	2.5	4.6	2.5	4.6	2.5	4.6	3.8	4.6	3.8	4.7	3.8	4.7	4.6	4.7	3.9	4.7	3.9	4.8	3.6	4.7	3.7	4.7	3.7	4.8	3.7	4.8	3.7	4.8

SPAN, S			12'											
HEIGHT, H			7'		8'		9'		10'		11'		12'	
MAXIMUM EARTH COVER			10'	20'	10'	20'	10'	20'	10'	20'	10'	20'	10'	20'
CONCRETE (INCH)	ROOF	T_1	12"	12"	12"	12"	12"	12"	12"	12"	12"	12"	12"	12"
	SIDE WALL	T_2	12"	12"	12"	12"	12"	12"	12"	12"	12"	12"	12"	12"
	INVERT	T_3	12"	12"	12"	12"	12"	12"	12"	12"	12"	12"	12"	12"
MINIMUM WELDED WIRE FABRIC ($inch^2/ft$)		"a"	.78	1.32	1.29	1.32								
		"b"	.53	.79	.74	.79								
		"c"	.54	.82	.42	1.06								
		"d"	.22	.11	.22	.11								
		"e"	.11	.11	.11	.11								
		"f"	.40	.50	.87	.26								
* QUANTITY	Conc	CY/LF	1.93		2.00									
	Reinf	LB/LF	249	357	281	393								
** SOIL PRESSURE (ksf)			3.8	4.9	3.8	4.9								

* See Note 3
** See Note 6

NOTES:

1. The inside and outside surfaces of the RCB roof shall be marked "TOP".
2. H1 minimum shall equal the wall thickness. H1 maximum shall be 8" for spans through 8' and 14" for spans over 8'.
3. Quantities are approximate and for design purposes only.
4. For design and details not shown, see Standard Plan D83B.
5. For external sealing band applications see Standard Plan A62G.
6. Soil pressures shown are factored per AASHTO LRFD and include soil weight of fill over box, self weight of box and live load where applicable.
7. If earth cover is less than 2', the concrete cover for the reinforcement at the top of top slab shall be 2". T1 in the Table shall have an additional 1" and quantities shall be revised accordingly in this case.

STATE OF CALIFORNIA
DEPARTMENT OF TRANSPORTATION

PRECAST REINFORCED CONCRETE BOX CULVERT

NO SCALE

D83A

2026 STANDARD PLAN D83A

7-1-26

Return to Table of Contents

Dist	COUNTY	ROUTE	POST MILES TOTAL PROJECT	SHEET No.	TOTAL SHEETS

REGISTERED CIVIL ENGINEER

September 18, 2026

PLANS APPROVAL DATE

Carl M. Duan No. C59976 Exp. 6-30-28 CIVIL STATE OF CALIFORNIA REGISTERED PROFESSIONAL ENGINEER

THE STATE OF CALIFORNIA OR ITS OFFICERS OR AGENTS SHALL NOT BE RESPONSIBLE FOR THE ACCURACY OR COMPLETENESS OF SCANNED COPIES OF THIS PLAN SHEET.

DESIGN NOTES:

Specifications:

AASHTO LRFD Bridge Design Specifications, 6th Edition with California Amendments.

Earth load:

Earth pressures for two conditions:
140 pcf Vert, 36 pcf Horiz
140 pcf Vert, 120 pcf Horiz

Unit stresses:

f'c = 5.0 ksi
fy = 65.0 ksi for weld wire fabric
n = 7

Shear:

Based on

$V_c = \{2.14\sqrt{f'_c} + 4600 \frac{A_s}{bd_e} \frac{Vud_e}{Mu}\} b.d_e \leq 4.0\sqrt{f'_c} b.d_e$ (Pounds)

V_c shall not be less than $3.00\sqrt{f'_c} b.d_e$ for frame members and $2.5\sqrt{f'_c} b.d_e$ for simply supported members.

Exclusion:

Axial loading on the members has not been considered.

GENERAL NOTES:

Designation:

Standard single or multiple precast box culverts are shown on the plans as span times height with maximum cover over roof thus: 8' x 5' RCB with 10'-0" or double 10' x 5' RCB with 20'-0", followed by alternatives.

Alternatives:

Single cell:

Standard dimensions of AASHTO Material Specification 'M259' or 'M273'.

Multiple cell:

Constructed by placing single cells adjacent to each other. Inlet and outlet ends of culvert will be rounded unless square ends are designated. Parapet will be shown unless designated in plans. Such designation may be different for inlet and outlet ends.

Limitations:

Where the overfill is less than 12", Precast RCB culverts are not to be used. Precast RCB culverts are not to be used in siphon or pressurized installations unless appropriate "watertight" jointing is provided.

Special reinforcement coverage:

Precast RCB culvert standard plans are not to be used in a corrosive environment or where there is a severe abrasive flow condition or freeze-thaw locations.

Special design:

Required for culvert with different conditions, loads or design bearing pressures greater than those given on these plans. Required for culverts where end details need higher skew angles, higher parapets or barrier sections.

CONSTRUCTION NOTES:

Cutoff walls:

4'-0" Cutoff walls are to be provided at inlet and/or outlet unless channel is lined and unless otherwise shown. These walls are to be extended if scour conditions warrant. See Standard Plans D84, D85 and D86A.

Wingwalls:

Wingwalls shall be cast-in-place and shall conform to standard plan details for box culvert wingwalls. See Standard Plans D84, D85 and D86A.

Earthwork:

See Standard Plan A62G.

Construction loads:

Strutting may be required near temporary ends. For construction loads on culverts, see Standard Plan D88.

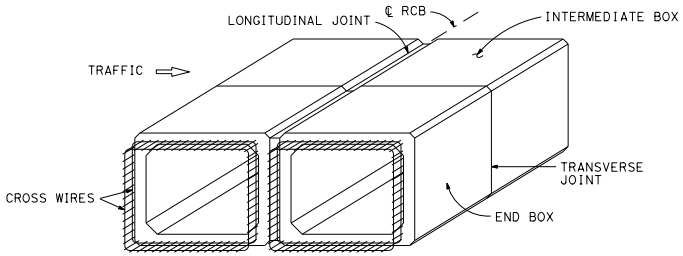

PRECAST RCB TERMINOLOGY

NOTE: Inner and outer reinforcement to be exposed as required to tie to cast-in-place construction. A minimum of two cross wires shall be exposed on all sides.

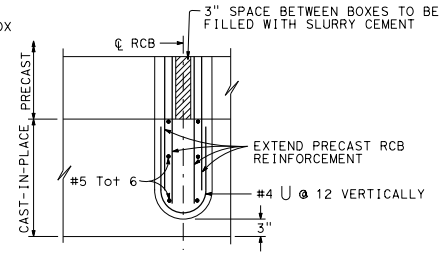

PARTIAL PLAN INTERIOR WALL MULTI CELL CULVERT

PARAPET "P" BARS			
SKEW ANGLE / SPAN	0° TO 15°	16° TO 30°	31° TO 45°
4'-0"	#5	#5	#5
5'-0"	#5	#5	#6
6'-0"	#6	#6	#6
7'-0"	#7	#7	#7
8'-0"	#7	#7	#8
10'-0"	#8	#8	#9
12'-0"	#9	#9	#10

BARRIER PARAPET REINFORCEMENT

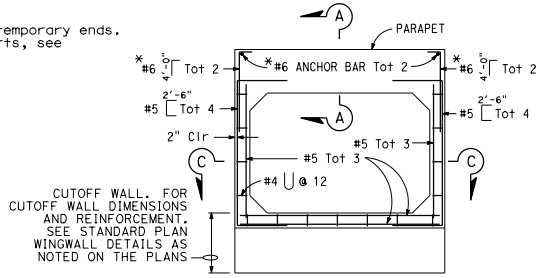

CAST-IN-PLACE END ELEVATION

* Reinforcing required for barrier parapet application only.

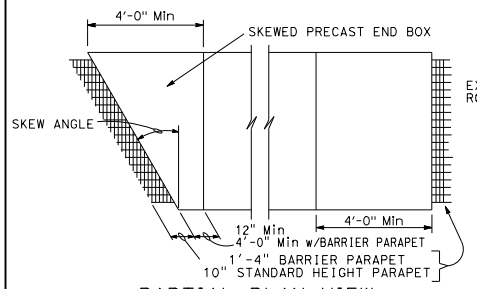

PARTIAL PLAN VIEW

For illustrative purposes only. For correct skew direction see plans.

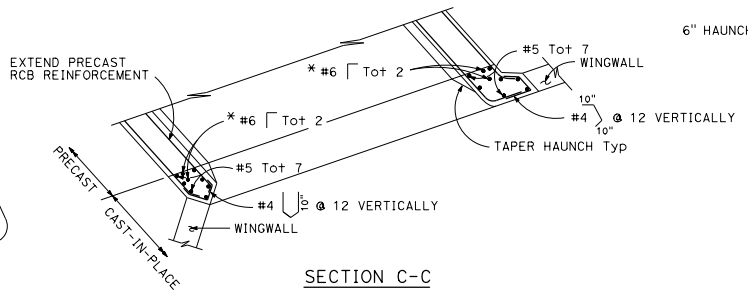

SECTION C-C

* Reinforcing required for barrier parapet application only.

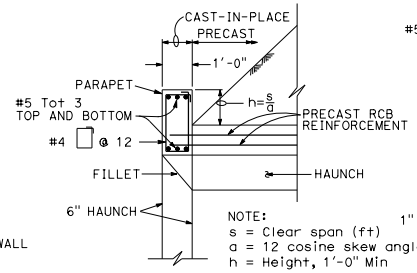

NOTE:
s = Clear span (ft)
a = 12 cosine skew angle
h = Height, 1'-0" Min

SECTION A-A
Standard Height Parapet

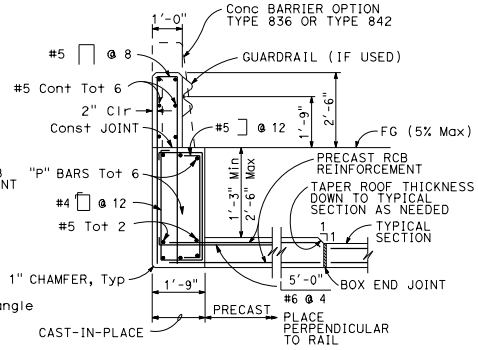

SECTION A-A
Barrier Parapet

TYPICAL CULVERT END DETAILS

For wall and invert reinforcement not shown, see "End Elevation" detail.

STATE OF CALIFORNIA
DEPARTMENT OF TRANSPORTATION

PRECAST REINFORCED CONCRETE BOX CULVERT MISCELLANEOUS DETAILS

NO SCALE

D83B

2026 STANDARD PLAN D83B

7-1-26

Return to Table of Contents

Dist	COUNTY	ROUTE	POST MILES TOTAL PROJECT	SHEET No.	TOTAL SHEETS

REGISTERED CIVIL ENGINEER

September 18, 2026

PLANS APPROVAL DATE

REGISTERED PROFESSIONAL ENGINEER Carl M. Duan No. C59976 Exp. 6-30-28 CIVIL STATE OF CALIFORNIA

THE STATE OF CALIFORNIA OR ITS OFFICERS OR AGENTS SHALL NOT BE RESPONSIBLE FOR THE ACCURACY OR COMPLETENESS OF SCANNED COPIES OF THIS PLAN SHEET.

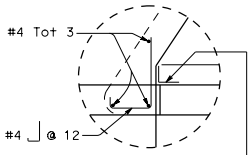

DETAIL "X"

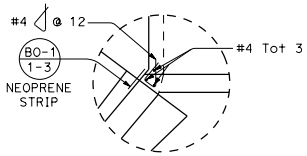

DETAIL Y

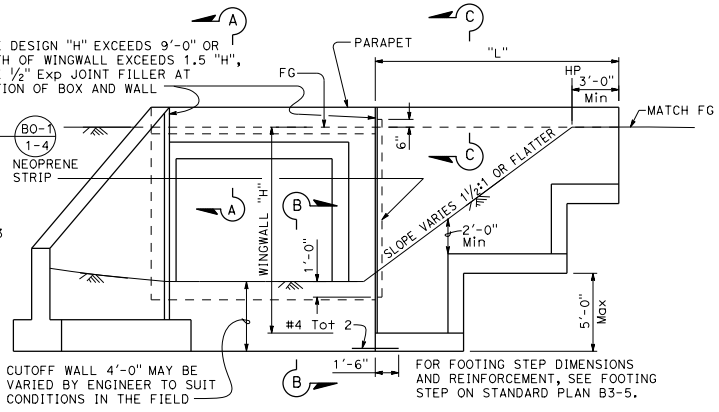

END ELEVATION

TYPE A — SEE B3-1A B3-1B B3-1C

TYPE B — SEE B3-1A B3-1B B3-1C

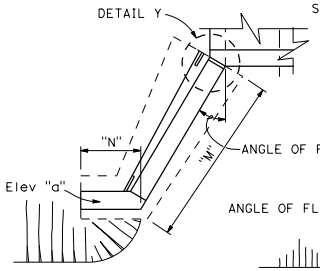

TYPE C

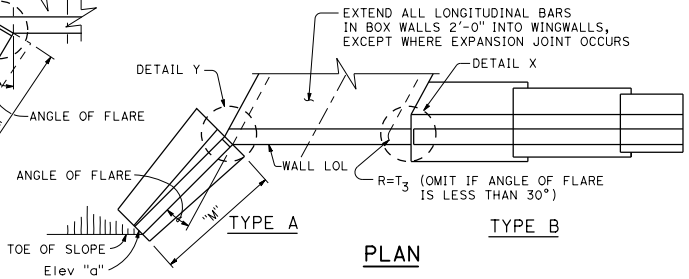

TYPE A

TYPE B

PLAN

STRAIGHT WINGWALLS

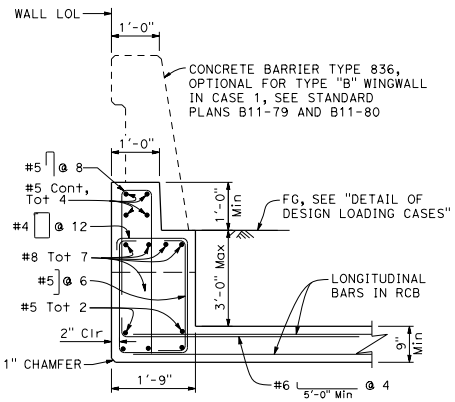

SECTION A-A

NOTE:

Reinforcing steel in RCB not shown completely for clarity.

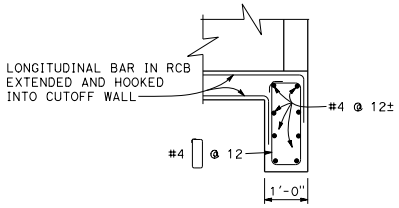

SECTION B-B

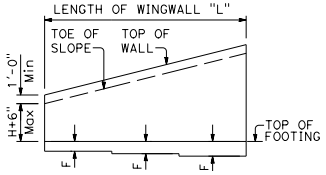

ELEVATION

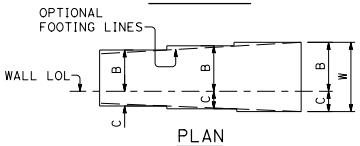

PLAN

TYPICAL LAYOUT

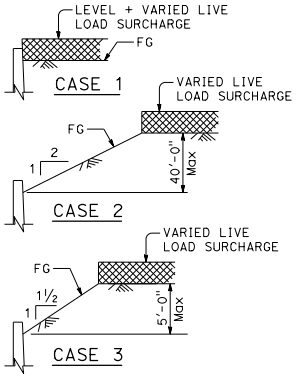

DETAIL OF DESIGN LOADING CASES

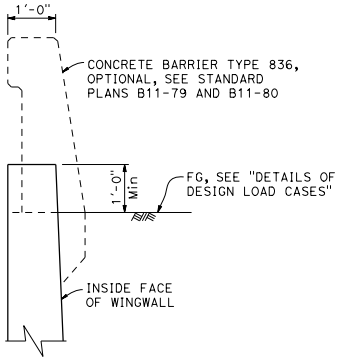

SECTION C-C (CASE 1)

Reinforcing steel in wingwall not shown for clarity.

DESIGN NOTES

DESIGN: AASHTO LRFD Bridge Design Specifications, 8th Edition with California Amendments, Preface dated 2019

SOIL: γ = 120 pcf, ϕ = 34°

LS: Varied live load surcharge on level ground surface

REINFORCED CONCRETE: f'_c = 3,600 psi
f_y = 60,000 psi

NOTES:

1. For Design Notes on Type A, Type B and Type C wingwalls, see Standard Plans B3-1A, B3-1B and B3-1C.
2. For CASE 1 in Type B wall, concrete barrier can be installed on top of the headwall and wingwall as an option.
3. Elevations, length and angle of flare of wingwalls may be varied by the Engineer to suit conditions encountered in the field.
4. Dimensions "H", "L", "M", "N", Elev "a" and Angle of flare (as applicable) are shown on the plans.
5. Wall height may be exceeded by 6" before going to next greater "H".
6. Eliminate cutoff wall if adjacent channel is paved and skew is 20° maximum.

STATE OF CALIFORNIA
DEPARTMENT OF TRANSPORTATION

BOX CULVERT WINGWALLS TYPES A, B AND C

NO SCALE

D84

2026 STANDARD PLAN D84

7-1-26

Return to Table of Contents

Dist	COUNTY	ROUTE	POST MILES TOTAL PROJECT	SHEET No.	TOTAL SHEETS

REGISTERED CIVIL ENGINEER

September 18, 2026
PLANS APPROVAL DATE

REGISTERED PROFESSIONAL ENGINEER — Carl M. Duan — No. C59976 — Exp. 6-30-28 — CIVIL — STATE OF CALIFORNIA

THE STATE OF CALIFORNIA OR ITS OFFICERS OR AGENTS SHALL NOT BE RESPONSIBLE FOR THE ACCURACY OR COMPLETENESS OF SCANNED COPIES OF THIS PLAN SHEET.

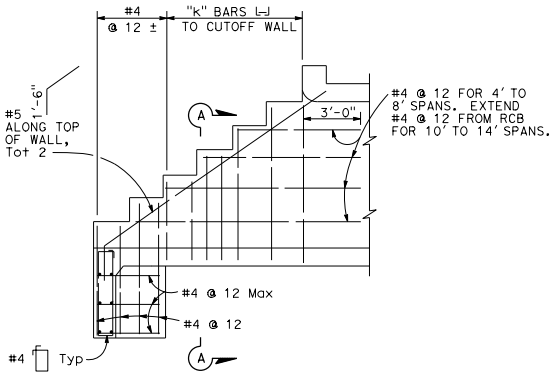

LONGITUDINAL SECTION
Outside face reinforcement shown

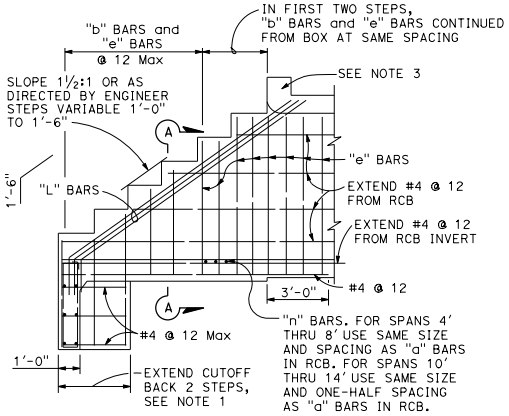

LONGITUDINAL SECTION
Inside face reinforcement shown

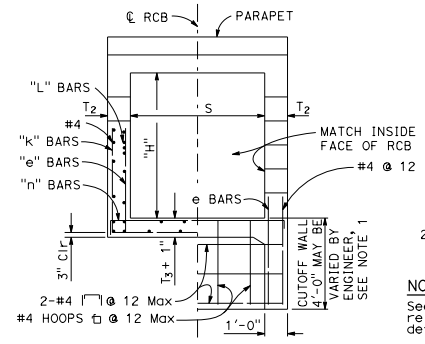

HALF SECTION A-A END ELEVATION

Dimensions S and T_3 to be same as adjacent RCB.
T_2 = Same as adjacent RCB (8" Min).

TYPE E STEPPED WINGWALL (SINGLE BOX CULVERT)

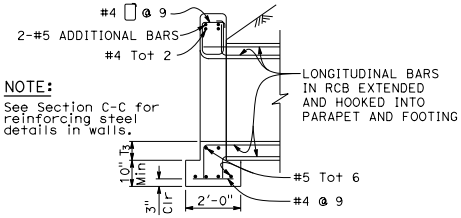

NOTE:
See Section C-C for reinforcing steel details in walls.

SECTION B-B

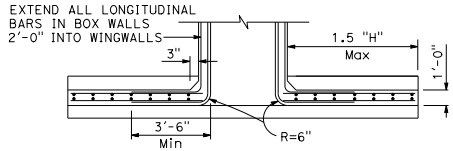

SECTION C-C

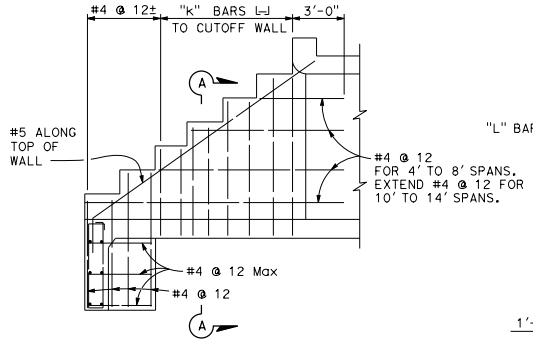

LONGITUDINAL SECTION
Outside face reinforcement shown

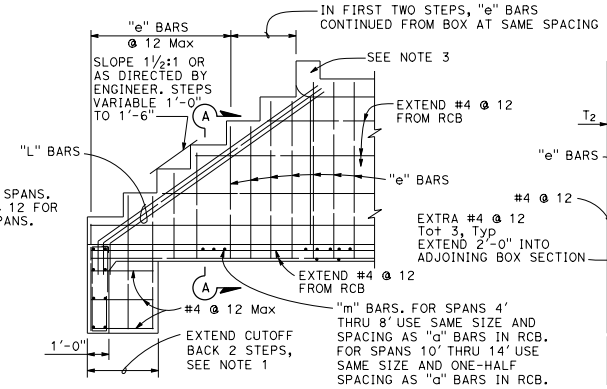

LONGITUDINAL SECTION
Inside face reinforcement shown

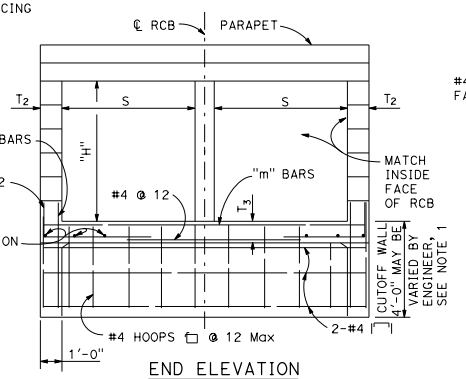

END ELEVATION

Dimensions S and T_3 to be same as adjacent RCB.
T_2 = Same as adjacent RCB (8" Min).

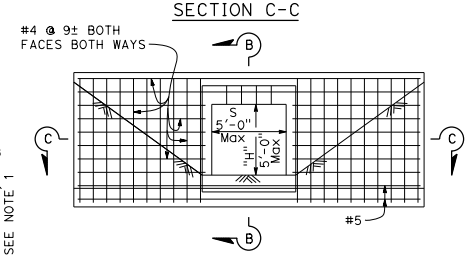

ELEVATION

TYPE D STRAIGHT WINGWALL

Details similar for multiple span boxes. See Note 3.

TYPE E STEPPED WINGWALL (MULTIPLE BOX CULVERT)

DESIGN NOTES

DESIGN: AASHTO LRFD Bridge Design Specifications, 8th Edition with California Amendments, Preface dated 2019

SOIL: γ = 120 pcf, ϕ = 34°

LS: Varied live load surcharge on level ground surface

REINFORCED CONCRETE: f'_c = 3,600 psi
f_y = 60,000 psi

NOTES:

1. Eliminate cutoff walls if adjacent channel is paved and reinforcing steel is connected to the bottom slab of RCB.
2. For "H" not shown, use reinforcement for next greater height.
3. For parapet details not shown, see Standard Plan D82.

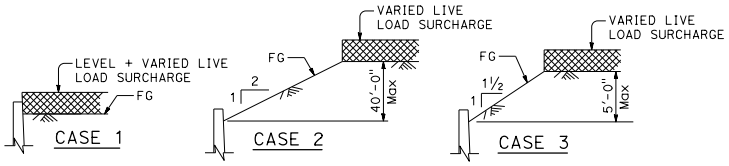

DETAIL OF DESIGN LOADING CASES
TYPE D

TABLE OF REINFORCEMENT FOR TYPE "E" WINGWALLS										
"H" (SEE NOTE 2)		3'	4'	5'	6'	7'	8'	10'	12'	14'
"k" BARS	BAR No.	#4	#4	#5	#5	#5	#5	#5	#5	#5
	SPACING	@ 12	@ 12	@ 12	@ 10	@ 9	@ 8	@ 7	@ 5	@ 4
"L" BARS	BAR No.	#5	#5	#6	#6	#7	#7	#7	#7	#7
	NUMBER EACH WALL	2	2	3	3	3	3	3	3	3

STATE OF CALIFORNIA
DEPARTMENT OF TRANSPORTATION

BOX CULVERT WINGWALLS TYPES D AND E

NO SCALE

D85

7-1-26

2026 STANDARD PLAN D85

Return to Table of Contents

Dist	COUNTY	ROUTE	POST MILES TOTAL PROJECT	SHEET No.	TOTAL SHEETS

REGISTERED CIVIL ENGINEER

September 18, 2026
PLANS APPROVAL DATE

REGISTERED PROFESSIONAL ENGINEER — Carl M. Duan — No. C59976 — Exp. 6-30-28 — CIVIL — STATE OF CALIFORNIA

THE STATE OF CALIFORNIA OR ITS OFFICERS OR AGENTS SHALL NOT BE RESPONSIBLE FOR THE ACCURACY OR COMPLETENESS OF SCANNED COPIES OF THIS PLAN SHEET.

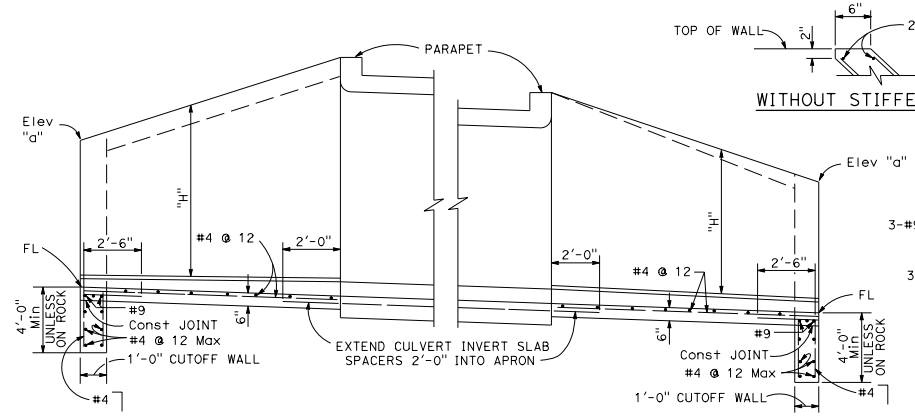

TYPICAL WITH STIFFENING BEAM TYPICAL WITHOUT STIFFENING BEAM

PART LONGITUDAL SECTION

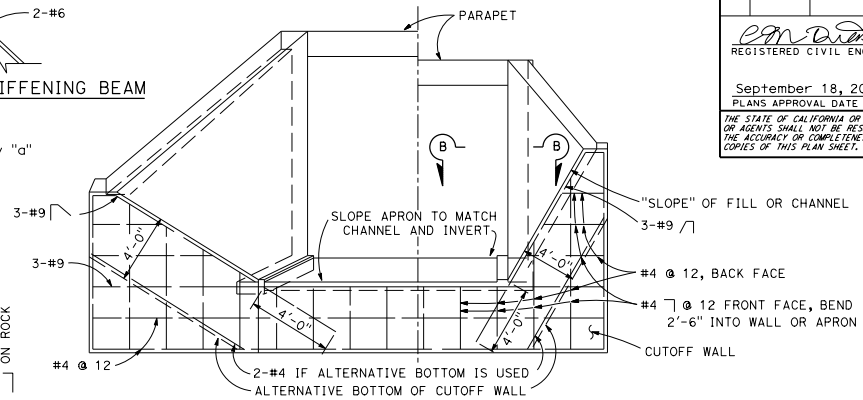

END ELEVATION

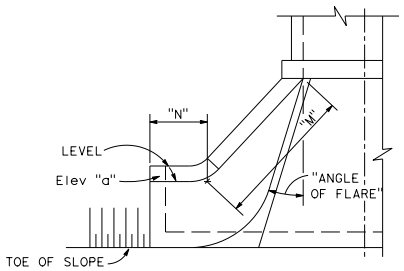

ALTERNATIVE WARPED WINGWALL

Use where additional protection to toe of embankment is required.

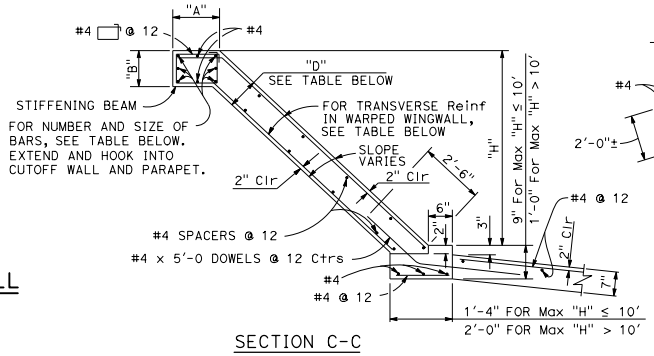

SECTION C-C

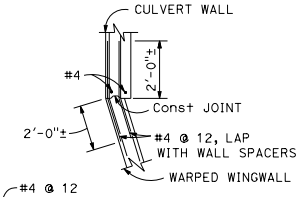

SECTION B-B

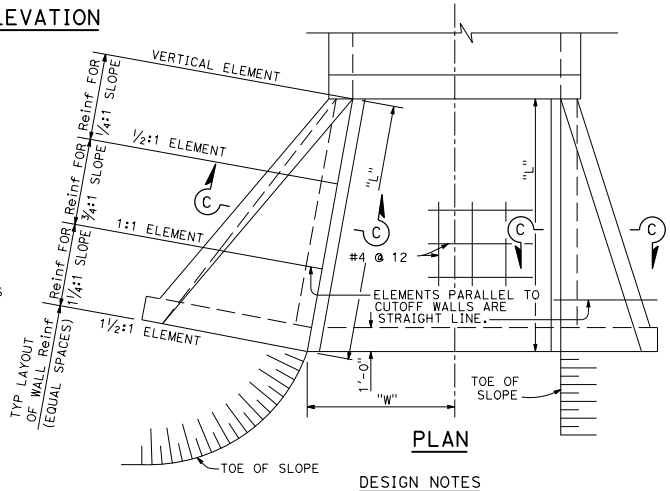

PLAN

DESIGN NOTES

DESIGN: AASHTO LRFD Bridge Design Specifications, 8th Edition with California Amendments, Preface dated 2019

SOIL: γ = 120 pcf, ϕ = 34°

LS: 2 ft surcharge on level ground surface

REINFORCED CONCRETE: f'_c = 3,600 psi
f_y = 60,000 psi

WARPED WINGWALLS

ELEMENT SLOPE	"H"	WALL DIMENSIONS AND REINFORCING: 8' OR LESS	10'	12'	14'	16'	18'	20'
1/4:1	FRONT FACE Reinf	#4 @ 12	#4 @ 7	#5 @ 7	#5 @ 5	#6 @ 6	#7 @ 7	#7 @ 6
	REAR FACE Reinf	#4 @ 12	#4 @ 12	#4 @ 12	#4 @ 12	#4 @ 12	#4 @ 12	#4 @ 12
3/4:1	FRONT FACE Reinf	#4 @ 12	#4 @ 12	#4 @ 8	#4 @ 8	#4 @ 8	#4 @ 6	#4 @ 6
	REAR FACE Reinf	#4 @ 12	#4 @ 12	#4 @ 12	#4 @ 10	#4 @ 7	#4 @ 6	#5 @ 8
1 1/4:1	FRONT FACE Reinf	#4 @ 12	#4 @ 12	#4 @ 12	#4 @ 12	#4 @ 12	#4 @ 12	#4 @ 12
	REAR FACE Reinf	#4 @ 8	#4 @ 8	#4 @ 5	#5 @ 6	#6 @ 7	#6 @ 6	#7 @ 6
"D" AT CUTOFF WALL		6½"	6½"	6½"	8"	8½"	10"	11½"
"D" AT CULVERT		6½"	6½"	6½"	8½"	10"	11½"	1'-1½"

STIFFENING BEAM DIMENSIONS AND REINFORCING

"H" Max \ "L" Max	12'	14'	16'	18'	20'	25'	30'	35'	40'
6'	NO BEAM. PLACE 2-#6 IN EACH FACE ALONG TOP OF WALL.								
8'			"A"= 1'-0"						
10'									
12'		"B"= 9"				"A"= 1'-6"			
14'	TOTAL 6-#6							"A"= 1'-10"	
16'				"B"= 1'-0"			"B"= 1'-3"		"A"= 2'-2"
18'			TOTAL 6-#7			TOTAL 8-#8			"B"= 1'-6"
20'								TOTAL 8-#9	

NOTES: Walls designed for equivalent fluid pressure = 36 pcf.
Vary "D" of warped wall uniformly from that at cutoff wall to that at culvert, for maximum "H" > 12'-0".
Dimensions "L", "W", "H", "M", "N", Elevation "a", "Angle of flare", and end "Slope" (as applicable) are shown on the plans.

STATE OF CALIFORNIA
DEPARTMENT OF TRANSPORTATION

BOX CULVERT WARPED WINGWALLS

NO SCALE

D86A

2026 STANDARD PLAN D86A

7-1-26

Return to Table of Contents

Dist	COUNTY	ROUTE	POST MILES TOTAL PROJECT	SHEET No.	TOTAL SHEETS

REGISTERED CIVIL ENGINEER

September 18, 2026
PLANS APPROVAL DATE

Carl M. Duan
No. C59976
Exp. 6-30-28
CIVIL
STATE OF CALIFORNIA
REGISTERED PROFESSIONAL ENGINEER

THE STATE OF CALIFORNIA OR ITS OFFICERS OR AGENTS SHALL NOT BE RESPONSIBLE FOR THE ACCURACY OR COMPLETENESS OF SCANNED COPIES OF THIS PLAN SHEET.

LEGEND:
EF - EACH FACE

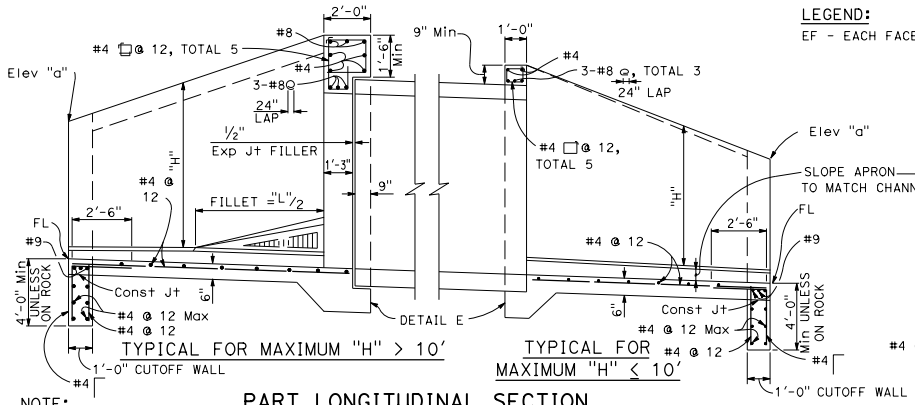

TYPICAL FOR MAXIMUM "H" > 10'

TYPICAL FOR MAXIMUM "H" ≤ 10'

PART LONGITUDINAL SECTION

NOTE:
RCP shown. Metal pipe similar except eliminate the expansion joint and use hook bolts @ 1'-7" ± spacing. Size and length provided by manufacturer.

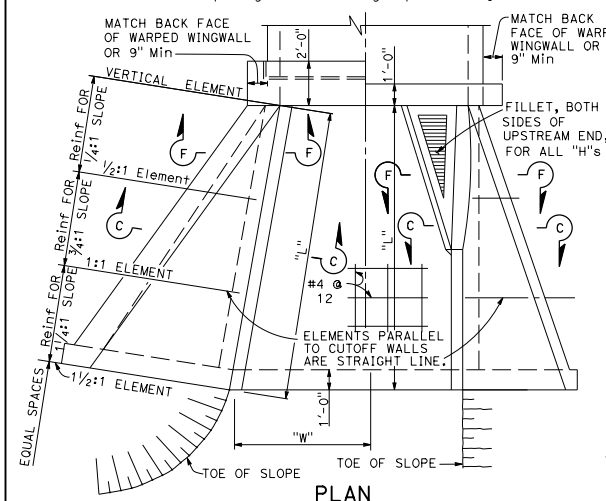

PLAN

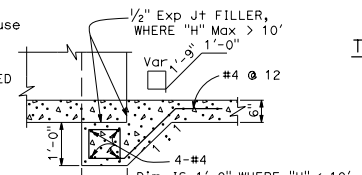

DETAIL E

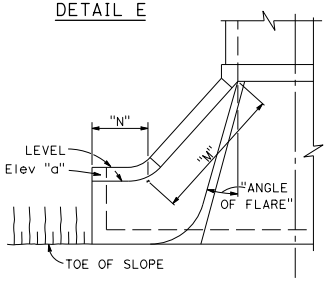

ALTERNATIVE WARPED WINGWALL

Use where additional protection to toe of embankment is required. If at upstream end, fillet is not shown.

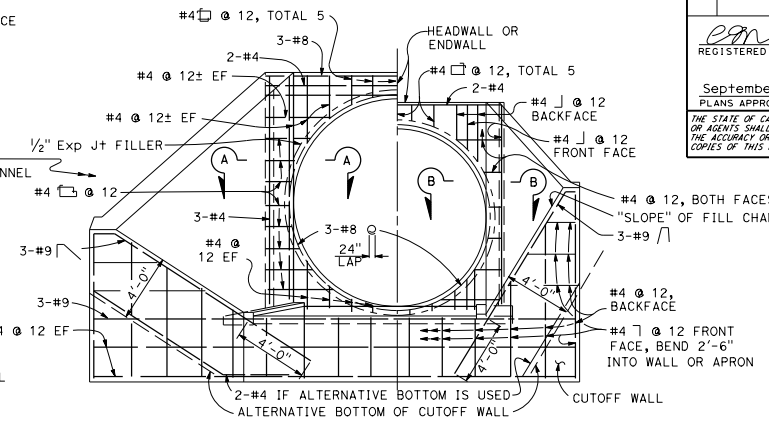

TYPICAL FOR MAXIMUM "H" > 10'

TYPICAL FOR MAXIMUM "H" ≤ 10'

WITHOUT STIFFENING BEAM

END ELEVATION

If at upstream end, fillet is not shown.

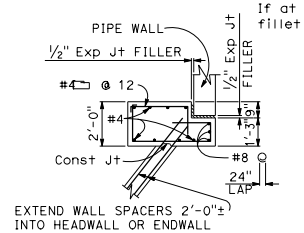

SECTION A-A

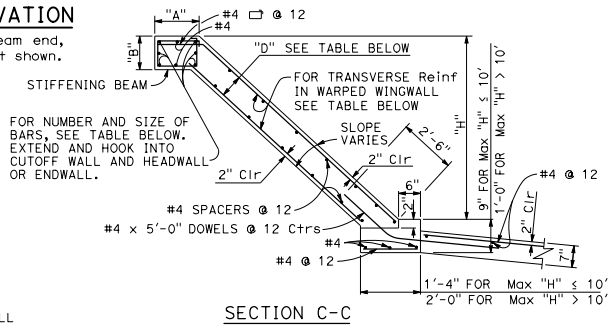

SECTION C-C

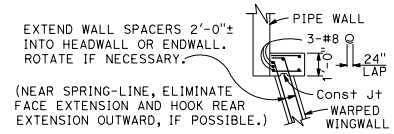

SECTION B-B

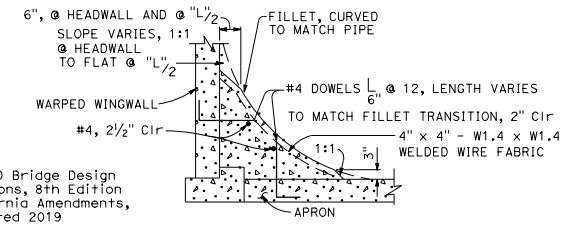

SECTION F-F

WARPED WINGWALLS

WALL DIMENSIONS AND REINFORCING									STIFFENING BEAM DIMENSIONS AND REINFORCING									
ELEMENT SLOPE	"H"	8' OR LESS	10'	12'	14'	16'	18'	20'	"H" Max \ "L"	12'	14'	16'	18'	20'	25'	30'	35'	40'
1/4:1	FRONT FACE Reinf	#4 @ 12	#4 @ 7	#5 @ 7	#5 @ 5	#6 @ 6	#7 @ 7	#7 @ 6	6'	NO BEAM. PLACE 2-#6 IN EACH FACE ALONG TOP OF WALL.								
	REAR FACE Reinf	#4 @ 12	#4 @ 12	#4 @ 12	#4 @ 12	#4 @ 12	#4 @ 12	#4 @ 12	8'		"A"= 1'-0"							
3/4:1	FRONT FACE Reinf	#4 @ 12	#4 @ 12	#4 @ 8	#4 @ 8	#4 @ 8	#4 @ 6	#4 @ 6	10'			"B"= 9"			"A"= 1'-6"			
	REAR FACE Reinf	#4 @ 12	#4 @ 12	#4 @ 12	#4 @ 10	#4 @ 7	#4 @ 6	#5 @ 8	12'							"A"= 1'-10"		
1 1/4:1	FRONT FACE Reinf	#4 @ 12	#4 @ 12	#4 @ 12	#4 @ 12	#4 @ 12	#4 @ 12	#4 @ 12	14'	TOTAL 6-#6		"B"= 1'-0"			"B"= 1'-3"			
	REAR FACE Reinf	#4 @ 8	#4 @ 8	#4 @ 5	#5 @ 6	#6 @ 7	#6 @ 6	#7 @ 6	16'								"A"= 2'-2"	
"D" AT CUTOFF WALL		6 1/2"	6 1/2"	6 1/2"	8"	8 1/2"	10"	11 1/2"	18'				TOTAL 6-#7		TOTAL 8-#8		"B"= 1'-6"	
"D" AT CULVERT		6 1/2"	6 1/2"	6 1/2"	8 1/2"	10"	11 1/2"	1'-1 1/2"	20'								TOTAL 8-#9	

NOTES: Walls designed for equivalent fluid pressure = 36 pcf.
Vary "D" of warped wall uniformly from that at cutoff wall to that at headwall or endwall, for maximum "H" > 12'-0".
Dimensions "L", "W", "H", "M", "N", Elevation "a", "Angle of flare", and end "Slope" (as applicable) are shown on the plans.

DESIGN NOTES

DESIGN: AASHTO LRFD Bridge Design Specifications, 8th Edition with California Amendments, Preface dated 2019
SOIL: γ = 120 pcf, ϕ = 34°
LS: 2 ft surcharge on level ground surface
REINFORCED CONCRETE: f'_c = 3,600 psi
f_y = 60,000 psi

STATE OF CALIFORNIA
DEPARTMENT OF TRANSPORTATION

PIPE CULVERT HEADWALLS, ENDWALLS AND WARPED WINGWALLS

NO SCALE

2026 STANDARD PLAN D86B

D86B

7-1-26

Return to Table of Contents

Dist	COUNTY	ROUTE	POST MILES TOTAL PROJECT	SHEET No.	TOTAL SHEETS

REGISTERED CIVIL ENGINEER

September 18, 2026
PLANS APPROVAL DATE

Carl M. Duan No. C59976 Exp. 6-30-28 CIVIL STATE OF CALIFORNIA REGISTERED PROFESSIONAL ENGINEER

THE STATE OF CALIFORNIA OR ITS OFFICERS OR AGENTS SHALL NOT BE RESPONSIBLE FOR THE ACCURACY OR COMPLETENESS OF SCANNED COPIES OF THIS PLAN SHEET.

2026 STANDARD PLAN D86C

LEGEND:
EF - EACH FACE

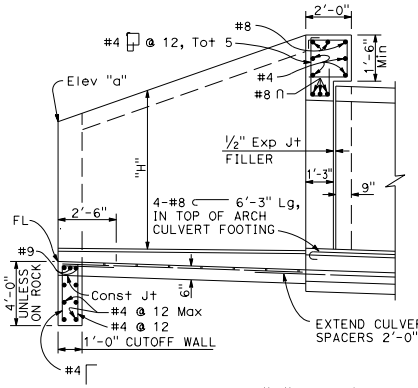

TYPICAL FOR MAXIMUM "H" > 10'

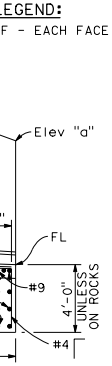

TYPICAL FOR MAXIMUM "H" ≤ 10'

PART LONGITUDINAL SECTION

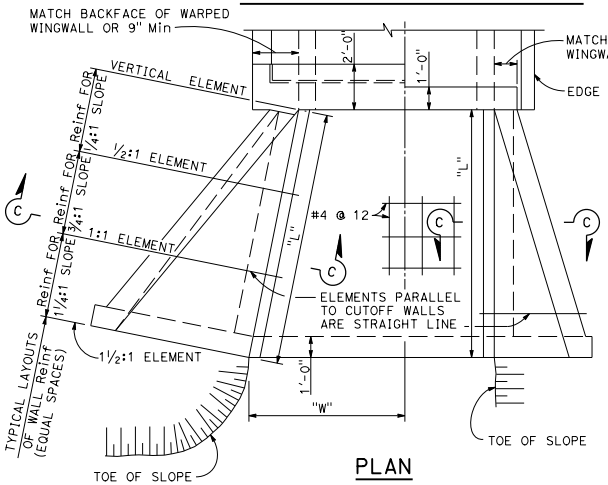

PLAN

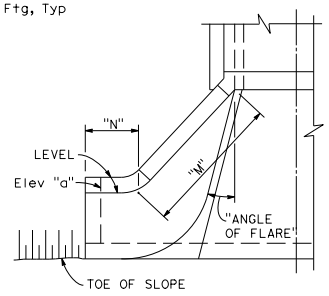

ALTERNATIVE WARPED WINGWALL

Use where additional protection to toe of embankment is required.

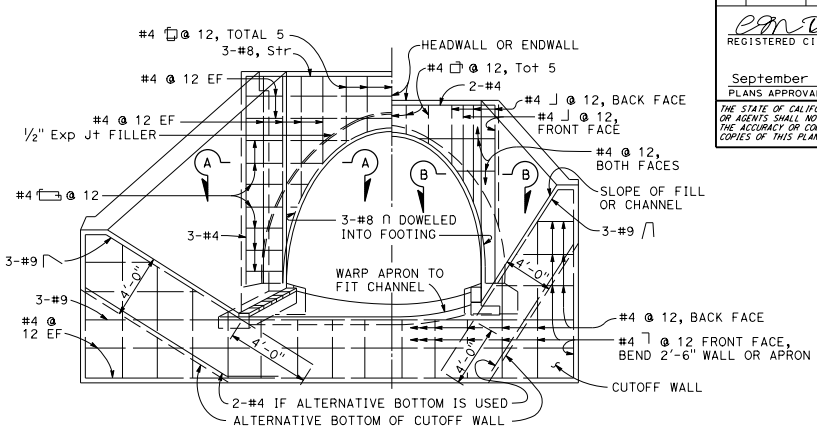

TYPICAL FOR MAXIMUM "H" > 10' TYPICAL FOR MAXIMUM "H" ≤ 10'

END ELEVATION

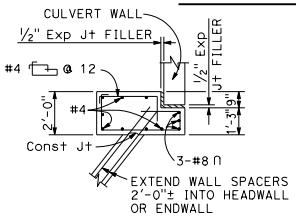

SECTION A-A

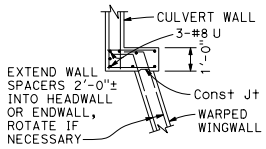

SECTION B-B

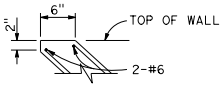

WITHOUT STIFFENING BEAM

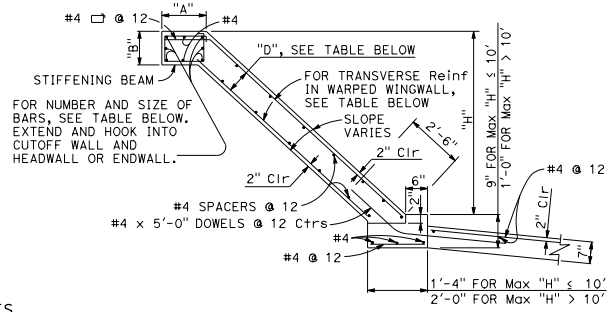

SECTION C-C

WARPED WINGWALLS

WALL DIMENSIONS AND REINFORCING										STIFFENING BEAM DIMENSIONS AND REINFORCING									
ELEMENT SLOPE	"H"	8' OR LESS	10'	12'	14'	16'	18'	20'		"H" Max \ "L"	12'	14'	16'	18'	20'	25'	30'	35'	40'
¼:1	FRONT FACE Reinf	#4 @ 12	#4 @ 7	#5 @ 7	#5 @ 5	#6 @ 6	#7 @ 7	#7 @ 6		6'	NO BEAM. PLACE 2-#6 IN EACH FACE ALONG TOP OF WALL.								
	REAR FACE Reinf	#4 @ 12	#4 @ 12	#4 @ 12	#4 @ 12	#4 @ 12	#4 @ 12	#4 @ 12		8'		"A"= 1'-0"							
¾:1	FRONT FACE Reinf	#4 @ 12	#4 @ 12	#4 @ 8	#4 @ 8	#4 @ 8	#4 @ 6	#4 @ 6		10'			"B"= 9"			"A"= 1'-6"			
	REAR FACE Reinf	#4 @ 12	#4 @ 12	#4 @ 12	#4 @ 10	#4 @ 7	#4 @ 6	#5 @ 8		12'								"A"= 1'-10"	
1¼:1	FRONT FACE Reinf	#4 @ 12	#4 @ 12	#4 @ 12	#4 @ 12	#4 @ 12	#4 @ 12	#4 @ 12		14'	TOTAL 6-#6			"B"= 1'-0"			"B"= 1'-3"		
	REAR FACE Reinf	#4 @ 8	#4 @ 8	#4 @ 5	#5 @ 6	#6 @ 7	#6 @ 6	#7 @ 6		16'									"A"= 2'-2" "B"= 1'-6"
"D" AT CUTOFF WALL		6½"	6½"	6½"	8"	8½"	10"	11½"		18'			TOTAL 6-#7			TOTAL 8-#8			
"D" AT CULVERT		6½"	6½"	6½"	8½"	10"	11½"	1'-1½"		20'								TOTAL 8-#9	

NOTES:
Walls designed for equivalent fluid pressure = 36 pcf.
Vary "D" of warped wall uniformly from that at cutoff wall to that at headwall or endwall, for maximum "H" > 12'.
Dimensions "L", "W", "H", "M", "N", Elev "a", "Angle of flare", and "Slope" (as applicable) are shown on the plans.

DESIGN NOTES

DESIGN: AASHTO LRFD Bridge Design Specifications, 8th Edition with California Amendments, Preface dated 2019
SOIL: γ = 120 pcf, ϕ = 34°
LS: 2 ft surcharge on level ground surface
REINFORCED CONCRETE: f'_c = 3,600 psi
f_y = 60,000 psi

STATE OF CALIFORNIA
DEPARTMENT OF TRANSPORTATION

ARCH CULVERT HEADWALLS, ENDWALLS AND WARPED WINGWALLS

NO SCALE

D86C

7-1-26

Return to Table of Contents

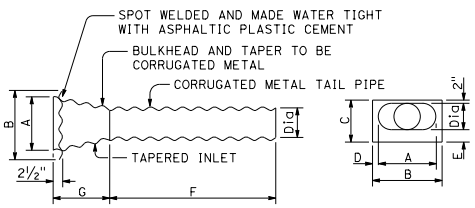

PLAN END VIEW

Bulkhead and taper of same thickness as tail pipe with 0.079" maximum. Tail pipe of same thickness as downdrain pipe.

ENTRANCE TAPER - TYPE 1 ALTERNATIVE A

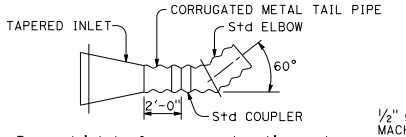

Tapered inlet of same construction and dimensions as Type 1 - Alternative A or B except tail pipe length will be 2'-0".

ENTRANCE TAPER - TYPE 2

Taper joints may be welded or riveted. Dimensions to be as tabulated below for Type 1 Alternatives A and B.

Dia	A	B	C	D	E	F	G
8"	1'-4"	2'-1½"	1'-3"	4¾"	5"	6'-0"	2'-0"
12"	1'-6"	2'-1½"	1'-7"	3¾"	5"	6'-0"	2'-0"
15"	1'-9"	2'-6"	1'-11"	4½"	6"	6'-0"	2'-0"
18"	2'-0"	2'-10"	2'-3"	5"	7"	6'-0"	2'-0"
24"	2'-10"	3'-10"	2'-11"	6"	9"	4'-0"	4'-0"

ENTRANCE TAPER - TYPE 1 ALTERNATIVE A AND B

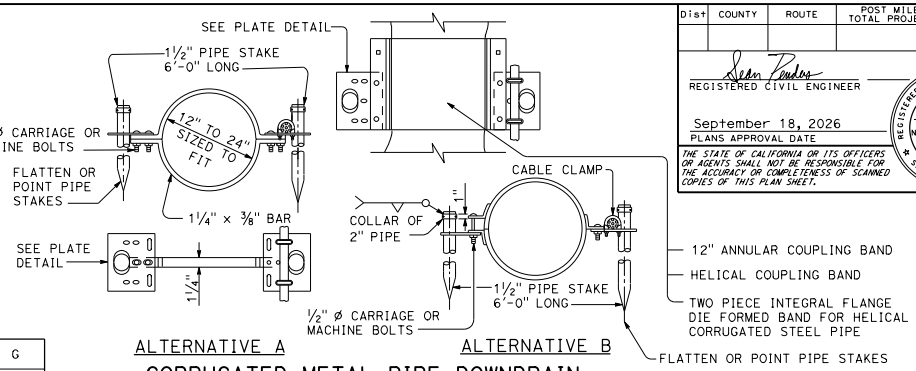

ALTERNATIVE A ALTERNATIVE B

CORRUGATED METAL PIPE DOWNDRAIN ANCHOR ASSEMBLY

Cable and cable clamps to be used when required by the Special Provisions.

Dist	COUNTY	ROUTE	POST MILES TOTAL PROJECT	SHEET No.	TOTAL SHEETS

REGISTERED CIVIL ENGINEER

September 18, 2026

PLANS APPROVAL DATE

Sean T. Penders No. C63744 Exp. 9-30-26 CIVIL STATE OF CALIFORNIA REGISTERED PROFESSIONAL ENGINEER

THE STATE OF CALIFORNIA OR ITS OFFICERS OR AGENTS SHALL NOT BE RESPONSIBLE FOR THE ACCURACY OR COMPLETENESS OF SCANNED COPIES OF THIS PLAN SHEET.

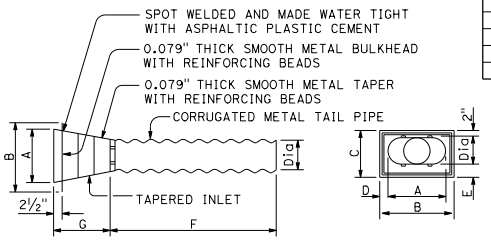

PLAN END VIEW

Tail pipe of same thickness as downdrain pipe.

ENTRANCE TAPER - TYPE 1 ALTERNATIVE B

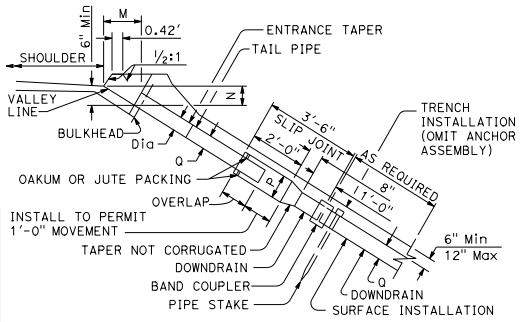

SECTION A-A TYPE 1

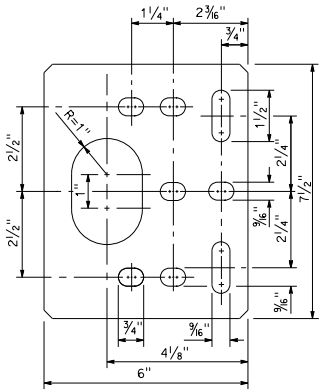

PLATE DETAIL

Material to be ¼" plate galvanized after fabrication.

NOTES:

1. Either Alternative A or Alternative B anchor assemblies and pipe stakes may be used at Contractor's option for corrugated steel pipe or corrugated aluminum pipe. Alternative A anchor assembly only to be placed in annular corrugation. Alternative A anchor assembly may be placed on annular coupling band if securely fastened on downstream side of joint. Alternative B anchor assembly to be fastened to pipe sections and not to a band coupler used to join sections.
2. For cable anchorage system details, see Standard Plan D87C.

CMP dimensions as tabulated below

P	10"	15"	18"	21"	27"
Q	8"	12"	15"	18"	24"

Slip joint to be same thickness as downdrain pipe.

Dia	Min L	M	N
8"	10'-0"	1'-6"	8"
12"	15'-0"	1'-8"	1'-0"
15"	25'-0"	2'-0"	1'-3"
18"	30'-0"	2'-6"	1'-4"
24"	40'-0"	3'-0"	1'-6"

NOTES:

1. Cable, slip joint or anchor assembly to be used when specified.
2. Slip joint to be omitted when completely buried.
3. Slip joint for Type 1 entrance taper shown. Type 2 similar.

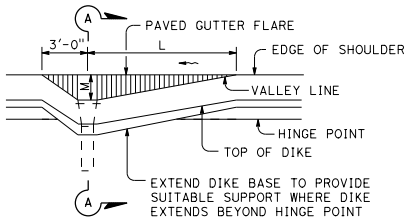

PLAN

MOUNTABLE DIKE TYPE 1

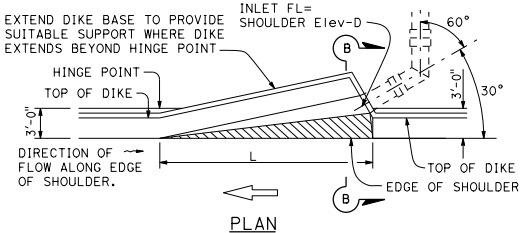

PLAN

MOUNTABLE DIKE TYPE 2

(For use on full freeway sections ONLY with grades of 2% or greater)

Dia D	Min L
8"	15'
12"	20'
15"	30'
18"	35'
24"	45'

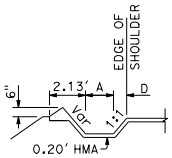

SECTION B-B

STATE OF CALIFORNIA
DEPARTMENT OF TRANSPORTATION

CORRUGATED METAL PIPE DOWNDRAIN DETAILS

NO SCALE

ENTRANCE TAPER AND PIPE DOWNDRAIN

D87A

7-1-26

Return to Table of Contents

Dist	COUNTY	ROUTE	POST MILES TOTAL PROJECT	SHEET No.	TOTAL SHEETS

REGISTERED CIVIL ENGINEER

September 18, 2026

PLANS APPROVAL DATE

REGISTERED PROFESSIONAL ENGINEER Sean T. Penders No. C63744 Exp. 9-30-26 CIVIL STATE OF CALIFORNIA

THE STATE OF CALIFORNIA OR ITS OFFICERS OR AGENTS SHALL NOT BE RESPONSIBLE FOR THE ACCURACY OR COMPLETENESS OF SCANNED COPIES OF THIS PLAN SHEET.

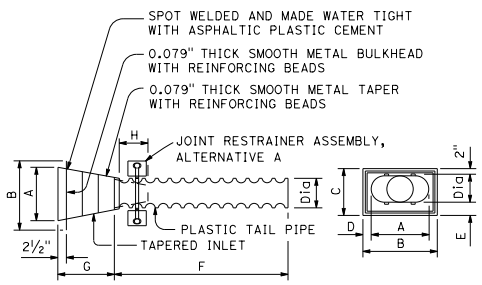

PLAN END VIEW

ENTRANCE TAPER - TYPE 1

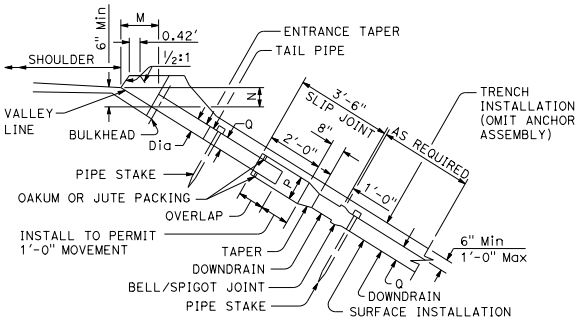

SECTION - TYPE 1

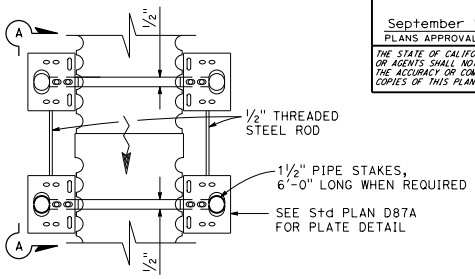

PLAN

PLASTIC PIPE DIMENSIONS AS TABULATED BELOW.

P	10"	15"	18"	21"	27"
Q	8"	12"	15"	18"	24"

Dia	Min L	M	N
8"	10'-0"	1'-6"	8"
12"	15'-0"	1'-8"	1'-0"
15"	25'-0"	2'-0"	1'-3"
18"	30'-0"	2'-6"	1'-4"
24"	40'-0"	3'-0"	1'-6"

NOTES:

1. Cable or slip joint to be used when specified.
2. Slip joint to be omitted when completely buried.

TAPER JOINTS MAY BE WELDED OR RIVETED. DIMENSIONS TO BE AS TABULATED BELOW.

Dia	A	B	C	D	E	F	G	H
8"	1'-4"	2'-1½"	1'-3"	4¾"	5"	6'-0"	2'-0"	1'-0"
12"	1'-6"	2'-1½"	1'-7"	3¾"	5"	6'-0"	2'-0"	1'-0"
15"	1'-9"	2'-6"	1'-11"	4½"	6"	6'-0"	2'-0"	1'-2"
18"	2'-0"	2'-10"	2'-3"	5"	7"	6'-0"	2'-0"	1'-4"
24"	2'-10"	3'-10"	2'-11"	6"	9"	4'-0"	4'-0"	1'-6"

ENTRANCE TAPER - TYPE 1

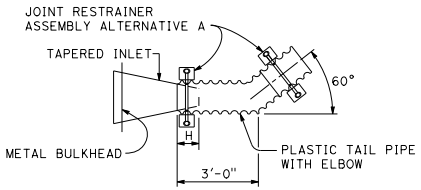

Tapered inlet of same construction and dimensions as type 1.

ENTRANCE TAPER - TYPE 2

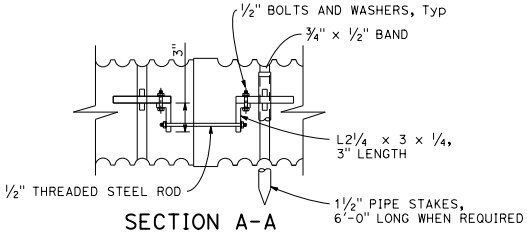

SECTION A-A
PLASTIC PIPE
JOINT RESTRAINER ASSEMBLY

Alternative B

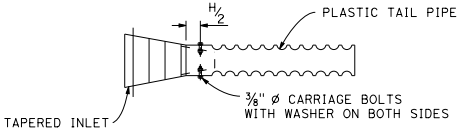

PLAN

Alternative tail pipe to entrance pipe connection

DETAIL "A"

See Note 5

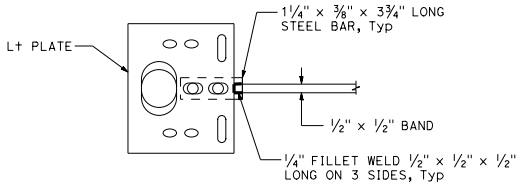

DETAIL 2
APPLIES TO BOTH L AND R PLATE

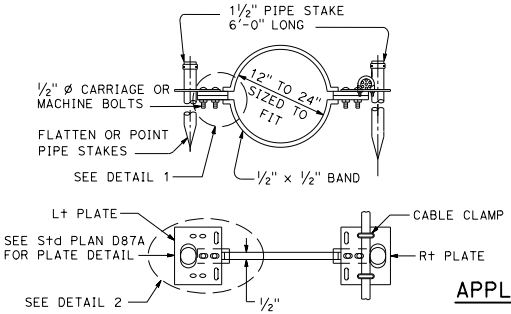

PLASTIC PIPE
JOINT RESTRAINER ASSEMBLY

Alternative A

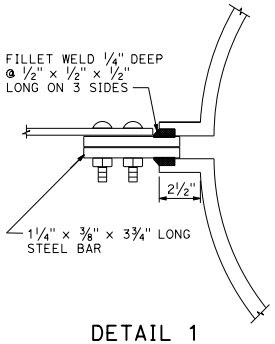

DETAIL 1
APPLIES TO BOTH L AND R PLATE

NOTES:

1. See Standard Plan D87A for details of entrance taper placement at dike.
2. Pipe stakes to be used with joint restrainer when specified.
3. Entrance taper "H" dimension is length of insertion of metal taper into plastic pipe.
4. For cable anchorage system details, see Standard Plan D87C.
5. At contractors option, tail pipe and tapered inlet may be supplied from manufacturer as a pre-connected unit as shown in Detail "A".

STATE OF CALIFORNIA
DEPARTMENT OF TRANSPORTATION

PLASTIC PIPE DOWNDRAIN DETAILS

NO SCALE

D87B

2026 STANDARD PLAN D87B

7-1-26

Return to Table of Contents

Dist	COUNTY	ROUTE	POST MILES TOTAL PROJECT	SHEET No.	TOTAL SHEETS

REGISTERED CIVIL ENGINEER

September 18, 2026

PLANS APPROVAL DATE

REGISTERED PROFESSIONAL ENGINEER Sean T. Penders No. C63744 Exp. 9-30-26 CIVIL STATE OF CALIFORNIA

THE STATE OF CALIFORNIA OR ITS OFFICERS OR AGENTS SHALL NOT BE RESPONSIBLE FOR THE ACCURACY OR COMPLETENESS OF SCANNED COPIES OF THIS PLAN SHEET.

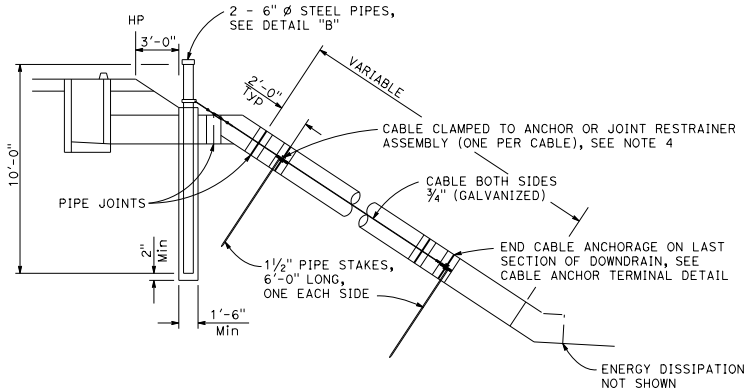

CABLE ANCHORAGE SYSTEM

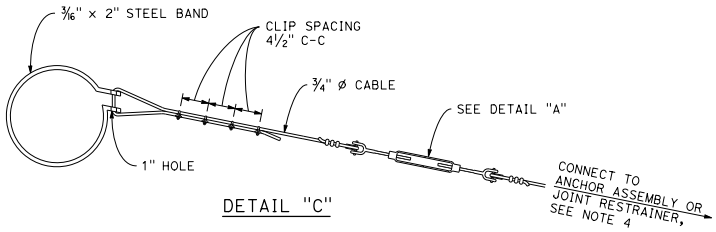

DETAIL "C"

BAND AND CABLE ASSEMBLY DETAIL FOR CABLE ANCHORAGE SYSTEM

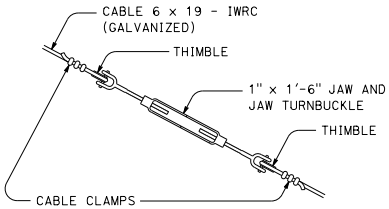

DETAIL "A"

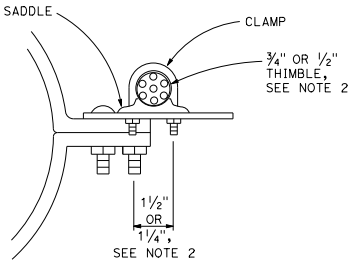

END VIEW

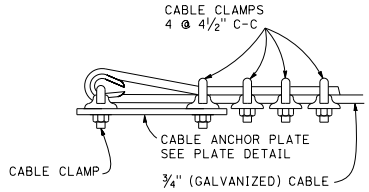

CABLE ANCHOR TERMINAL DETAIL

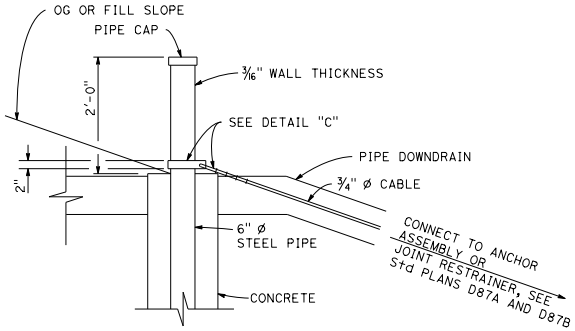

DETAIL "B"

STEEL PIPE PILE DETAILS FOR CABLE ANCHORAGE SYSTEM

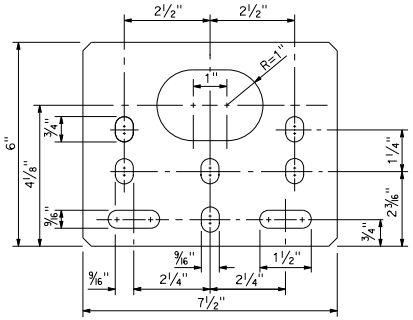

PLATE DETAIL

NOTES:

1. Diameter of downdrain 24" maximum.
2. ¾" ø cable shown, ½" ø cable is allowable for pipe downdrain diameters of 8" to 15". Use 1½" dimension for ¾" cable and 1¼" dimension for ½" cable.
3. Slip joints not shown.
4. See Standard Plan D87A for Corrugated Metal Pipe Downdrain Anchor Assembly. See Standard Plan D87B for Plastic Pipe Joint Restrainer Assembly.
5. Cable shall not contact soil in finished position. Either adjust position, or replace affected portion of cable with galvanized steel rod of equivalent diameter.

STATE OF CALIFORNIA
DEPARTMENT OF TRANSPORTATION

CABLE ANCHORAGE SYSTEM

NO SCALE

D87C

2026 STANDARD PLAN D87C

7-1-26

Return to Table of Contents

Dist	COUNTY	ROUTE	POST MILES TOTAL PROJECT	SHEET No.	TOTAL SHEETS

REGISTERED CIVIL ENGINEER

September 18, 2026

PLANS APPROVAL DATE

REGISTERED PROFESSIONAL ENGINEER Sean T. Penders No. C63744 Exp. 9-30-26 CIVIL STATE OF CALIFORNIA

THE STATE OF CALIFORNIA OR ITS OFFICERS OR AGENTS SHALL NOT BE RESPONSIBLE FOR THE ACCURACY OR COMPLETENESS OF SCANNED COPIES OF THIS PLAN SHEET.

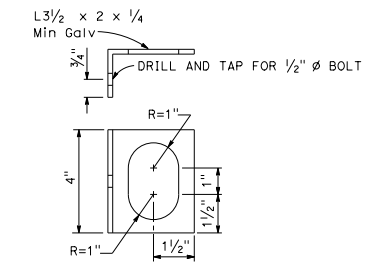

ALTERNATIVE CLIP BRACKET DETAIL

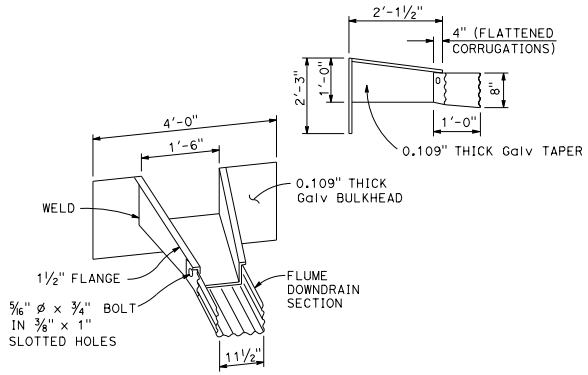

TAPERED INLET

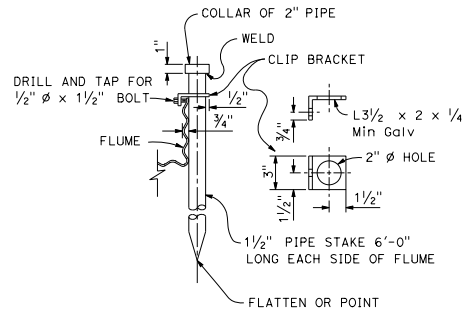

PIPE STAKE ANCHOR DETAIL

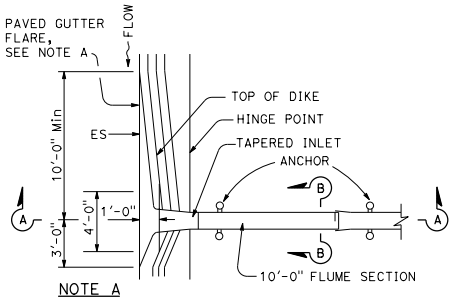

NOTE A

In sag location, use 10'-0" length of paved gutter flare on both sides of inlet.

PLAN

TAPERED INLET AND FLUME DOWNDRAIN

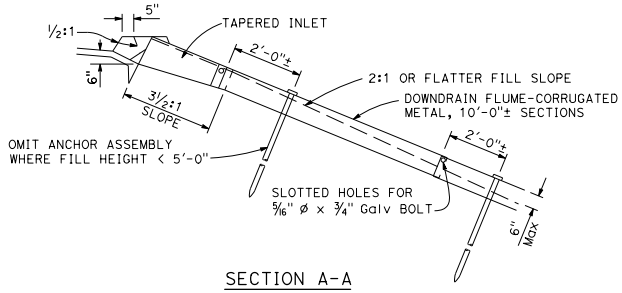

SECTION A-A

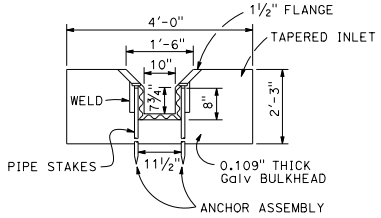

SECTION B-B

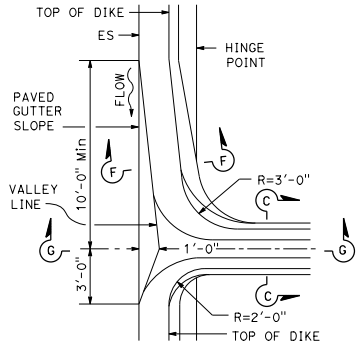

PLAN

MOUNTABLE DIKE

HOT MIX ASPHALT OVERSIDE DRAINS

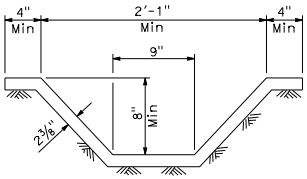

SECTION C-C

See Note 1

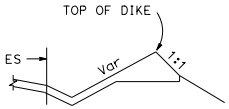

SECTION F-F

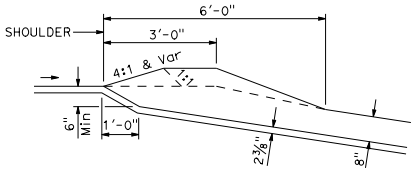

SECTION G-G

NOTE:

1. Cross section of slope ditch may be semicircular, vee or trapezoidal.

STATE OF CALIFORNIA
DEPARTMENT OF TRANSPORTATION

OVERSIDE DRAINS

NO SCALE

D87D

7-1-26

2026 STANDARD PLAN D87D

Return to Table of Contents

Dist	COUNTY	ROUTE	POST MILES TOTAL PROJECT	SHEET No.	TOTAL SHEETS

REGISTERED CIVIL ENGINEER

September 18, 2026
PLANS APPROVAL DATE

REGISTERED PROFESSIONAL ENGINEER Carl M. Duan No. C59976 Exp. 6-30-28 CIVIL STATE OF CALIFORNIA

THE STATE OF CALIFORNIA OR ITS OFFICERS OR AGENTS SHALL NOT BE RESPONSIBLE FOR THE ACCURACY OR COMPLETENESS OF SCANNED COPIES OF THIS PLAN SHEET.

TABLE OF MINIMUM COVER AND STRUTTING REQUIREMENTS FOR CONSTRUCTION LOADS

TYPE					18-50 k AXLE		50-75 k AXLE		75-110 k AXLE		110-150 k AXLE	
	MAXIMUM DESIGN FILL	SPAN	CELLS	Min COVER	STRUTS REQUIRED	STRUT SIZE AND SPACING	STRUTS REQUIRED	STRUT SIZE AND SPACING	STRUTS REQUIRED	STRUT SIZE AND SPACING	STRUTS REQUIRED	STRUT SIZE AND SPACING
BOX CULVERTS	10'-0" AND 20'-0"	4'-0" TO 8'-0"	SINGLE AND MULTIPLE	5'-0"	———	———	———	———	———	———	———	———
	10'-0"	10'-0" TO 14'-0"	SINGLE AND MULTIPLE	5'-0"	———	———	⅓ Points	STRUTS 6" x 6" @ 3'-6" SILLS 6" x 8"	⅓ Points	STRUTS 6" x 8" @ 3'-6" SILLS 6" x 8"	⅓ Points	STRUTS 6" x 8" @ 3'-6" SILLS 6" x 8"
	20'-0"	10'-0" TO 14'-0"	SINGLE AND MULTIPLE	5'-0"	———	———	———	———	———	———	———	———

TABLE OF MINIMUM COVER FOR CONSTRUCTION LOADS

TYPE		Dia OR SPAN	18-50 k AXLE	50-75 k AXLE	75-110 k AXLE	110-150 k AXLE
REINFORCED CONCRETE CULVERTS	PIPES	Dia 12" TO 39"	2'-0"	3'-0"	3'-0"	3'-0"
		Dia 42" TO 108"	$\frac{Dia}{1.75}$ OR 3'-0"	$\frac{Dia}{1.75}$ OR 3'-0"	$\frac{Dia}{1.75}$ OR 3'-0"	$\frac{Dia}{1.75}$ OR 3'-0"
	ARCHES	SPANS TO 14'-0"	$\frac{SPAN}{2.5}$ OR 4'-0"	$\frac{SPAN}{2.5}$ OR 4'-0"	$\frac{SPAN}{2.5}$ OR 4'-0"	$\frac{SPAN}{2.5}$ or 4'-0"
		SPANS 15'-0" TO 22'-0"	$\frac{SPAN}{3.5}$ OR 6'-0"	$\frac{SPAN}{3.5}$ OR 6'-0"	$\frac{SPAN}{3.5}$ OR 6'-0"	$\frac{SPAN}{3.5}$ OR 6'-0"
METAL CULVERTS	PIPES	Dia TO 120"	$\frac{Dia}{1.75}$ OR 4'-0"	$\frac{Dia}{1.75}$ OR 4'-0"	$\frac{Dia}{1.75}$ OR 4'-0"	$\frac{Dia}{1.75}$ OR 4'-0"
		Dia OVER 120"	$\frac{Dia}{3}$ OR 6'-0"	$\frac{Dia}{3}$ OR 6'-0"	$\frac{Dia}{3}$ OR 6'-0"	$\frac{Dia}{3}$ OR 6'-0"
	PIPE ARCHES	All Spans	$\frac{SPAN}{3}$ OR 4'-0"	$\frac{SPAN}{3}$ OR 4'-0"	$\frac{SPAN}{3}$ OR 4'-0"	$\frac{SPAN}{3}$ OR 4'-0"
	STRUCTURAL PLATE PIPE, ARCHES AND VEHICULAR UNDERCROSSINGS	ALL SPANS	$\frac{SPAN}{3}$ OR 5'-0"	$\frac{SPAN}{3}$ OR 5'-0"	$\frac{SPAN}{3}$ OR 5'-0"	$\frac{SPAN}{3}$ OR 5'-0"
PLASTIC PIPE		Dia 12" TO 60"	$\frac{Dia}{1.75}$ OR 4'-0"	$\frac{Dia}{1.75}$ OR 4'-0"	$\frac{Dia}{1.75}$ OR 4'-0"	$\frac{Dia}{1.75}$ OR 4'-0"

NOTE: Minimum cover shall be the greater value of alternatives shown. The diameter and spans shown in the table to calculate the minimum cover (Example: $\frac{Dia}{1.75}$) is the diameter or span of the facility expressed in number of feet.

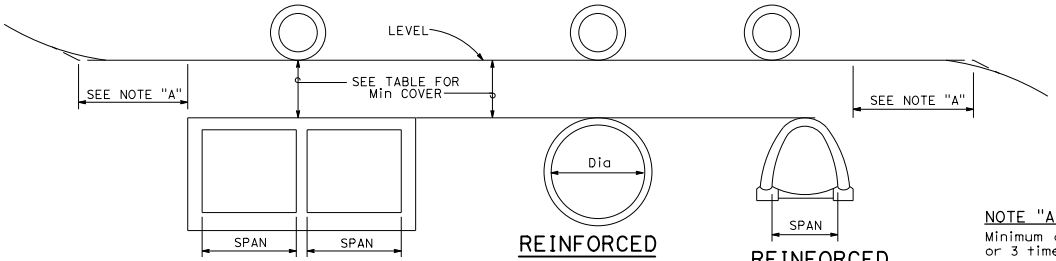

BOX CULVERTS

REINFORCED CONCRETE PIPES, PLASTIC PIPES AND METAL CULVERTS

REINFORCED CONCRETE ARCH CULVERTS

NOTE "A":
Minimum distance equals 3 times the span or 3 times the diameter.

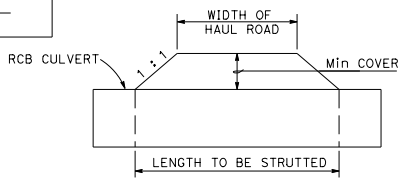

MINIMUM LENGTH OF STRUTTING

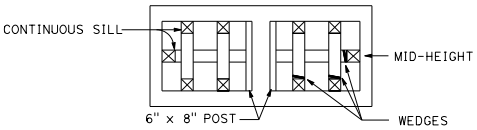

RCB STRUTTING DETAILS

NOTES:

Length of strutting to be determined by the Engineer, but shall not be less than as shown in the sketch above.

Assumed tire patterns:

50 k axle	2'-0" x 1'-6"
75 k axle	3'-0" x 2'-0"
110 k axle	3'-0" x 2.5'
150 k axle	3'-0" x 3'-0"

Impact = 10%

Sills to be glue-laminated or solid timber.

For strutting requirements of Structural Steel Plate Vehicular Undercrossing, Structural Steel Plate Arches and Structural Steel Plate Pipes during construction, see Standard Plan D88A.

STATE OF CALIFORNIA
DEPARTMENT OF TRANSPORTATION

CONSTRUCTION LOADS ON CULVERTS

NO SCALE

D88

2026 STANDARD PLAN D88

7-1-26

Return to Table of Contents

Dist	COUNTY	ROUTE	POST MILES TOTAL PROJECT	SHEET No.	TOTAL SHEETS

REGISTERED CIVIL ENGINEER

September 18, 2026
PLANS APPROVAL DATE

REGISTERED PROFESSIONAL ENGINEER
Carl M. Duan
No. C59976
Exp. 6-30-28
CIVIL
STATE OF CALIFORNIA

THE STATE OF CALIFORNIA OR ITS OFFICERS OR AGENTS SHALL NOT BE RESPONSIBLE FOR THE ACCURACY OR COMPLETENESS OF SCANNED COPIES OF THIS PLAN SHEET.

TABLE A

TIMBER STRUTS FOR STRUCTURAL STEEL PLATE PIPE			
PIPE Dia	STRUT SIZE	HEIGHT OF FILL	
		0 TO 20'-0"	GREATER THAN 20'-0"
240" THRU 252"	8" x 8"	5'-0" SPACING	3'-0" SPACING
	10" x 10"	8'-0" SPACING	4'-6" SPACING

TABLE B

TIMBER STRUTS FOR STRUCTURAL STEEL PLATE VEHICULAR UNDERCROSSING		
SPAN	STRUT SIZE	SILL SIZE
13'-2" - 15'-6"	4" x 4"	4" x 6"
15'-9" - 17'-3"	4" x 4"	4" x 8"
Over 17'-3"	6" x 6"	6" x 8"

Tabular data in Table B based on 6" x 2" corrugations, (Structural steel plate).

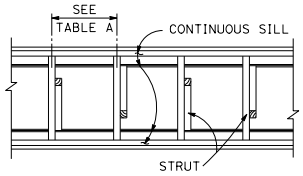

SECTION A-A

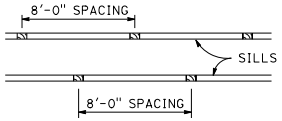

SECTION B-B

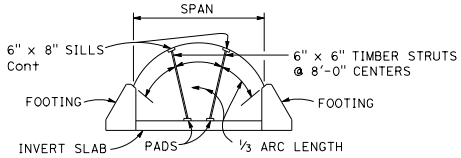

TYPICAL SECTION

STRUCTURAL STEEL PLATE ARCHES

Struts required when span of structural steel plate arch exceeds 18'-0" pad size as directed by Engineer.

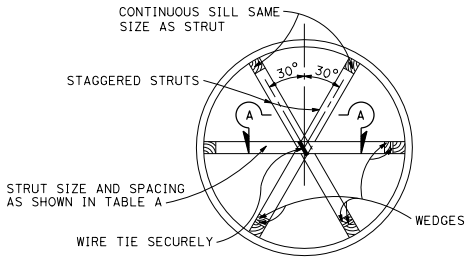

TYPICAL SECTION

STRUCTURAL STEEL PLATE PIPES

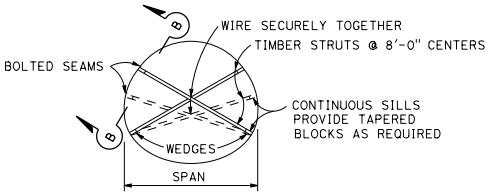

TYPICAL SECTION

STRUCTURAL STEEL PLATE VEHICULAR UNDERCROSSING

NOTES:

1. Struts shown are minimum required during construction when construction vehicle loading exceeds 32 kip/axle, and minimum cover is less than that shown for metal culverts in the table on Standard Plan D88.
2. Backfill shall be brought up uniformly on both sides of the structure.
3. For minimum cover over structure for construction loads, see Standard Plan D88.
4. Strut all situations where overfill is removed in an unbalanced manner.

STATE OF CALIFORNIA
DEPARTMENT OF TRANSPORTATION

STRUT DETAILS FOR STRUCTURAL STEEL PIPES, ARCHES AND VEHICULAR UNDERCROSSING

NO SCALE

D88A

7-1-26

2026 STANDARD PLAN D88A

Return to Table of Contents

Dist	COUNTY	ROUTE	POST MILES TOTAL PROJECT	SHEET No.	TOTAL SHEETS

REGISTERED CIVIL ENGINEER

September 18, 2026
PLANS APPROVAL DATE

Carl M. Duan
No. C59976
Exp. 6-30-28
CIVIL
STATE OF CALIFORNIA
REGISTERED PROFESSIONAL ENGINEER

THE STATE OF CALIFORNIA OR ITS OFFICERS OR AGENTS SHALL NOT BE RESPONSIBLE FOR THE ACCURACY OR COMPLETENESS OF SCANNED COPIES OF THIS PLAN SHEET.

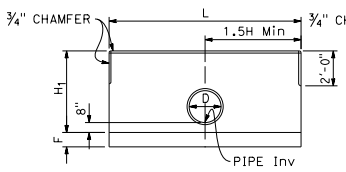

ELEVATION
STRAIGHT HEADWALL
SINGLE CIRCULAR PIPE

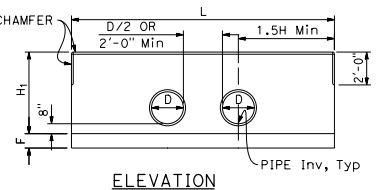

ELEVATION
STRAIGHT HEADWALL
DOUBLE CIRCULAR PIPE

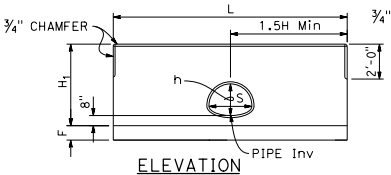

ELEVATION
STRAIGHT HEADWALL
SINGLE CMP

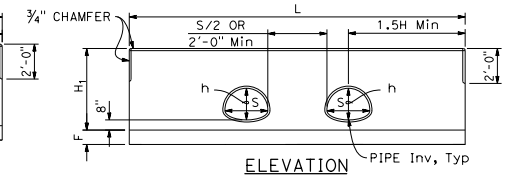

ELEVATION
STRAIGHT HEADWALL
DOUBLE CMP

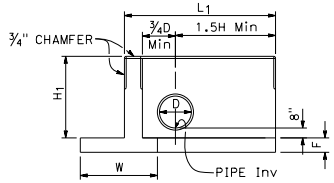

ELEVATION
"L" HEADWALL

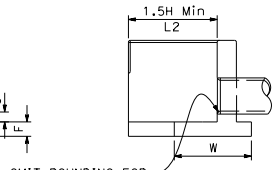

OMIT ROUNDING FOR PIPES < 48" Dia

SECTION
"L" HEADWALL

CIRCULAR PIPE CULVERT HEADWALLS

SEE NOTE 2

H (Min)	CIRCULAR PIPE SIZE D	CMP ARCH SIZE S x h
3'-11"	12"	-
4'-2"	15"	21" x 15"
4'-5"	18"	24" x 18"
4'-8"	21"	28" x 20"
4'-11"	24"	35" x 24"
5'-2"	27"	-
5'-5"	30"	42" x 29"
5'-8"	33"	49" x 33"
5'-11"	36"	-
6'-2"	39"	57" x 38"
6'-5"	42"	64" x 43"
6'-8"	45"	-
6'-11"	48"	71" x 47"

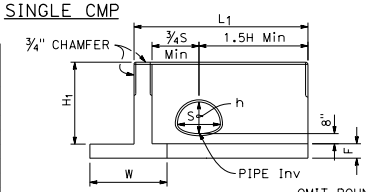

ELEVATION
"L" HEADWALL

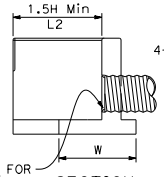

OMIT ROUNDING FOR PIPES < 48" Dia

SECTION
"L" HEADWALL

CMP ARCH CULVERT HEADWALLS

See Note 2

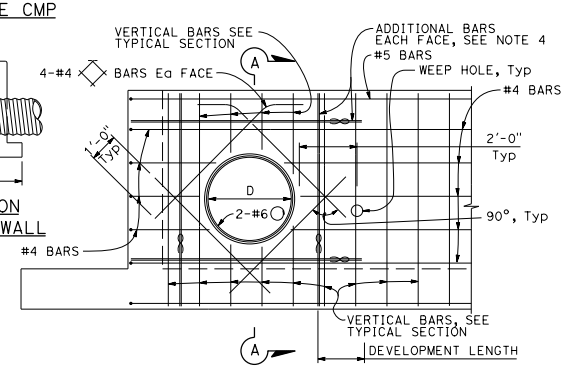

REINFORCEMENT MODIFICATION

"L" headwall shown. Straight headwall similar.
Circular pipe shown. CMP arch similar.

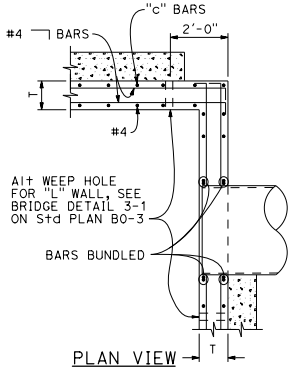

PLAN VIEW
STEM WALL

"L" headwall shown.
Straight headwall similar.

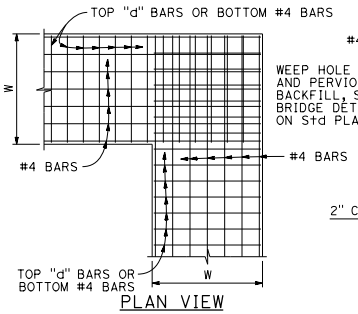

PLAN VIEW
FOOTING

"L" headwall shown.
Straight headwall similar.

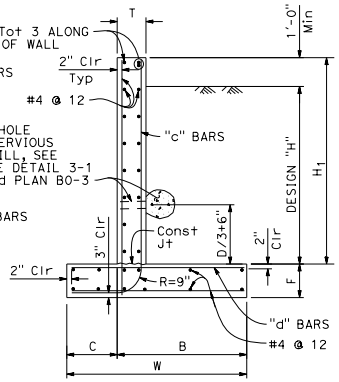

TYPICAL SECTION

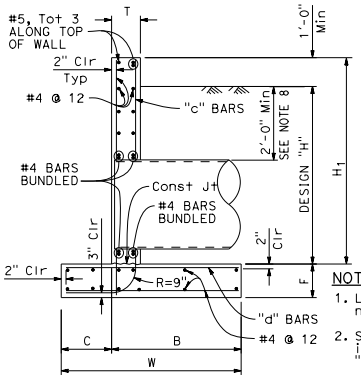

SECTION A-A

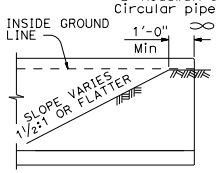

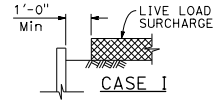

CASE I

DETAIL OF DESIGN LOADING CASES

NOTES:

1. Length of wall from ℄ pipe to end of wall is 1.5H Min. The ends of headwall need to be embedded into the slope by one foot.
2. Single circular pipe or single CMP shown for "L" headwall. For double pipe in "L" headwall, see "ELEVATION STRAIGHT HEADWALL DOUBLE CIRCULAR PIPE" or "ELEVATION STRAIGHT HEADWALL DOUBLE CMP" detail for additional information.
3. Cable railing to be installed on top of headwall when shown on Project Plans. See Standard Plan B11-47 for cable railing details.
4. Adjacent to each side of the opening, place additional reinforcement equivalent to half the interrupted main reinforcement.
5. Quantities are approximate and for design purposes only. No deduction is made for pipe or arch occupancy.
6. Provide necessary erosion protection in front of wall.
7. If precast construction is used, the design standard shall be equal to or exceed that shown here, and the bottom of footing must be roughened.
8. Minimum earth cover of two feet at ETW of the roadway without cap protection to pipe.

H	3'-11"	4'-2"	4'-5"	4'-8"	4'-11"	5'-2"	5'-5"	5'-8"	5'-11"	6'-2"	6'-5"	6'-8"	6'-11"
T	10"	10"	10"	10"	10"	10"	10"	10"	10"	1'-0"	1'-0"	1'-0"	1'-0"
W	4'-10"	4'-10"	5'-0"	5'-4"	5'-4"	5'-4"	5'-4"	5'-4"	5'-4"	5'-4"	5'-6"	5'-9"	6'-0"
C	1'-0"	1'-0"	1'-0"	1'-4"	1'-4"	1'-4"	1'-4"	1'-4"	1'-4"	1'-4"	1'-6"	1'-6"	1'-6"
B	3'-10"	3'-10"	4'-0"	4'-0"	4'-0"	4'-0"	4'-0"	4'-0"	4'-0"	4'-0"	4'-0"	4'-3"	4'-6"
F	1'-0"	1'-0"	1'-0"	1'-0"	1'-0"	1'-0"	1'-0"	1'-0"	1'-0"	1'-2"	1'-2"	1'-2"	1'-2"
"c" BARS	#4 @ 12	#4 @ 12	#4 @ 12	#4 @ 12	#4 @ 12	#4 @ 12	#4 @ 12	#4 @ 12	#5 @ 12	#5 @ 12	#5 @ 12	#5 @ 9	#5 @ 9
"d" BARS	#5 @ 12	#5 @ 12	#5 @ 12	#5 @ 8	#5 @ 8	#5 @ 8	#5 @ 8	#6 @ 8	#6 @ 8	#6 @ 8	#6 @ 6	#6 @ 6	#6 @ 6
* Conc CY/LF	0.33	0.34	0.35	0.37	0.38	0.39	0.40	0.40	0.41	0.50	0.51	0.53	0.55
* Reinf LB/LF	32	32	33	37	38	39	39	43	47	48	53	58	60
**CASE I Ser (q'o, B')	0.87, 4.68	0.88, 4.69	0.88, 4.75	0.89, 4.80	0.90, 4.95	0.92, 5.09	0.95, 5.00	0.96, 4.90	1.05, 4.80	1.10, 4.67	1.12, 4.70	1.14, 5.05	1.15, 5.32
**CASE I Str (q'o, B')	1.45, 4.60	1.49, 4.65	1.50, 4.71	1.52, 4.78	1.53, 4.81	1.55, 4.99	1.62, 4.50	2.10, 3.15	2.20, 2.50	2.38, 1.63	2.15, 1.65	2.10, 2.20	2.04, 2.41

* Quantities include 1'-0" extension above the design "H" limit.
** q'o = net bearing stress (ksf), B' = effective footing width (ft)
Ser - service limit
Str - strength limit

REINFORCED CONCRETE HEADWALL
Quantities do not include added diagonals and do not consider pipe occupancy.

NOTE: Reinforced Concrete: fy = 60,000 psi
f'c = 3,600 psi
Earth Density: 120 pcf
Equivalent Fluid Pressure: 36 pcf

STATE OF CALIFORNIA
DEPARTMENT OF TRANSPORTATION

PIPE CULVERT HEADWALLS STRAIGHT AND "L"

NO SCALE

D89A

7-1-26

2026 STANDARD PLAN D89A

Return to Table of Contents

Dist	COUNTY	ROUTE	POST MILES TOTAL PROJECT	SHEET No.	TOTAL SHEETS

REGISTERED CIVIL ENGINEER

September 18, 2026
PLANS APPROVAL DATE

Carl M. Duan
No. C59976
Exp. 6-30-28
CIVIL
STATE OF CALIFORNIA
REGISTERED PROFESSIONAL ENGINEER

THE STATE OF CALIFORNIA OR ITS OFFICERS OR AGENTS SHALL NOT BE RESPONSIBLE FOR THE ACCURACY OR COMPLETENESS OF SCANNED COPIES OF THIS PLAN SHEET.

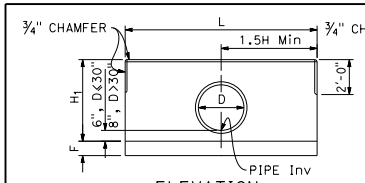

ELEVATION
STRAIGHT HEADWALL
SINGLE CIRCULAR PIPE

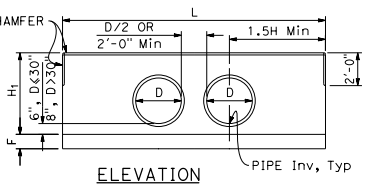

ELEVATION
STRAIGHT HEADWALL
DOUBLE CIRCULAR PIPE

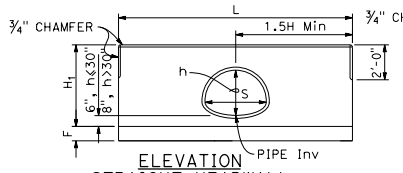

ELEVATION
STRAIGHT HEADWALL
SINGLE CMP

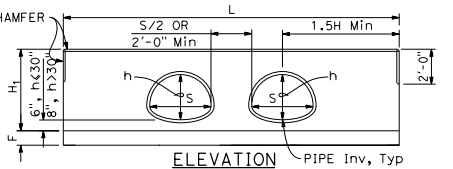

ELEVATION
STRAIGHT HEADWALL
DOUBLE CMP

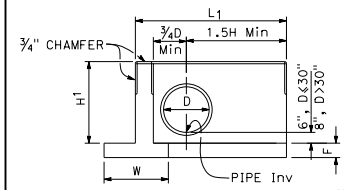

ELEVATION
"L" HEADWALL

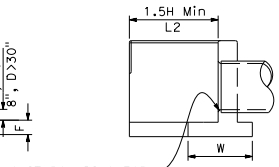

OMIT ROUNDING FOR PIPES < 48" Dia

SECTION
"L" HEADWALL

CIRCULAR PIPE CULVERT HEADWALLS

SEE NOTE 2

H	CIRCULAR PIPE SIZE D	CMP ARCH SIZE S x h
2'-8"	12"	-
2'-11"	15"	21" x 15"
3'-2"	18"	24" x 18"
3'-5"	21"	28" x 20"
3'-8"	24"	35" x 24"
3'-11"	27"	-
4'-2"	30"	42" x 29"
4'-8"	33"	49" x 33"
4'-11"	36"	-
5'-2"	39"	57" x 38"
5'-5"	42"	64" x 43"
5'-8"	45"	-
5'-11"	48"	71" x 47"
6'-2"	51"	-
6'-5"	54"	-

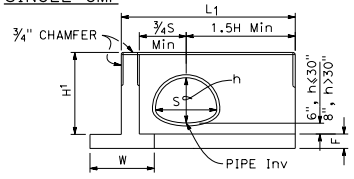

ELEVATION
"L" HEADWALL

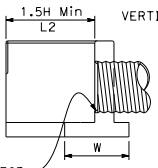

OMIT ROUNDING FOR PIPES < 48" Dia

SECTION
"L" HEADWALL

CMP ARCH CULVERT HEADWALLS

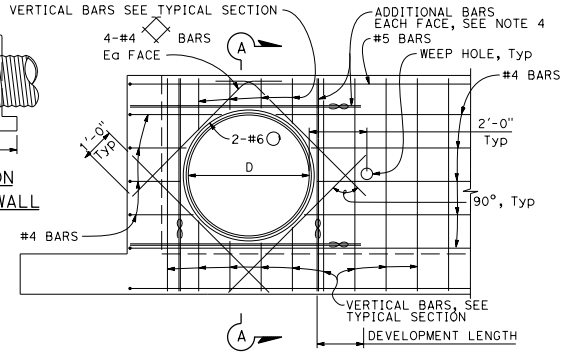

REINFORCEMENT MODIFICATION

"L" headwall shown. Straight headwall similar.
Circular pipe shown. CMP arch similar.
∞ - Bundle of two bars

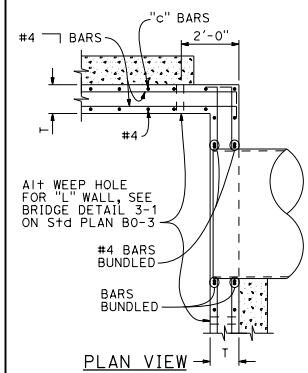

PLAN VIEW
STEM WALL

"L" headwall shown.
Straight headwall similar.

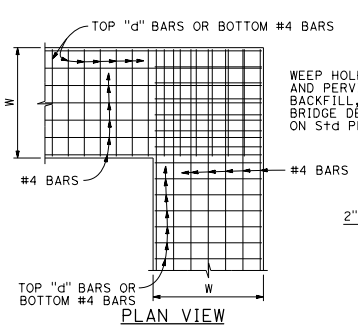

PLAN VIEW
FOOTING

"L" headwall shown.
Straight headwall similar.

SEE NOTE 2

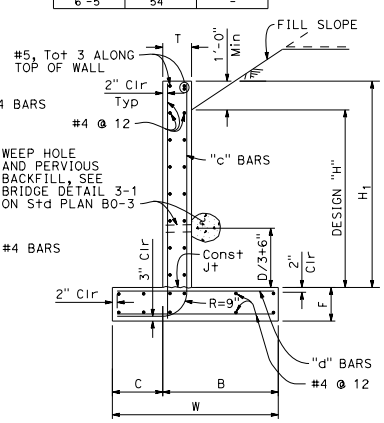

TYPICAL SECTION

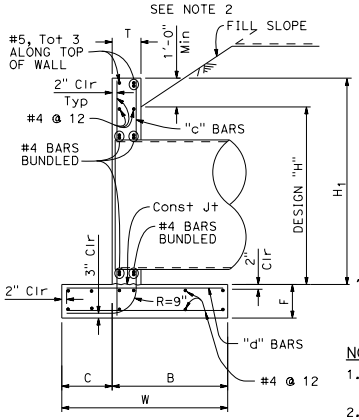

SECTION A-A

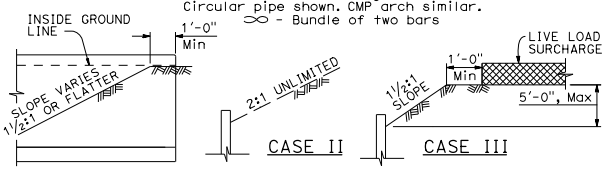

DETAIL OF DESIGN LOADING CASES

NOTES:

1. Length of wall from ℄ pipe to end of wall is 1.5H Min. The ends of headwall need to be embedded into the slope by one foot.
2. Single circular pipe or single CMP shown for "L" headwall. For double pipe in "L" headwall, see "ELEVATION STRAIGHT HEADWALL DOUBLE CIRCULAR PIPE" or "ELEVATION STRAIGHT HEADWALL DOUBLE CMP" detail for additional information.
3. Cable railing to be installed on top of headwall when shown on Project Plans. See Standard Plan B11-47 for cable railing details.
4. Adjacent to each side of the opening, place additional reinforcement equivalent to half the interrupted main reinforcement.
5. Quantities are approximate and for design purposes only. No deduction is made for pipe or arch occupancy.
6. Provide necessary erosion protection in front of wall.
7. If precast construction is used, the design standard shall be equal to or exceed that shown here, and the bottom of footing must be roughened.

H		2'-8"	2'-11"	3'-2"	3'-5"	3'-8"	3'-11"	4'-2"	4'-8"	4'-11"	5'-2"	5'-5"	5'-8"	5'-11"	6'-2"	6'-5"
T		10"	10"	10"	10"	10"	10"	10"	10"	10"	10"	10"	10"	1-0"	1-0"	1-0"
W		2'-3"	2'-3"	2'-3"	2'-6"	2'-6"	2'-6"	3'-0"	3'-0"	3'-3"	3'-9"	4'-0"	4'-2"	4'-2"	4'-6"	4'-9"
C		6"	6"	6"	6"	6"	6"	9"	9"	9"	1'-0"	1'-0"	1'-0"	1'-0"	1'-0"	1'-3"
B		1'-9"	1'-9"	1'-9"	2'-0"	2'-0"	2'-0"	2'-3"	2'-3"	2'-3"	2'-9"	3'-0"	3'-2"	3'-2"	3'-6"	3'-6"
F		1'-0"	1'-0"	1'-0"	1'-0"	1'-0"	1'-2"	1'-2"	1'-2"	1'-2"	1'-2"	1'-2"	1'-2"	1'-2"	1'-2"	1'-2"
"c" BARS		#4 @ 12	#4 @ 12	#4 @ 12	#4 @ 12	#4 @ 12	#4 @ 12	#4 @ 12	#5 @ 12	#5 @ 12	#5 @ 12	#5 @ 12	#5 @ 12	#5 @ 9	#5 @ 9	#5 @ 9
"d" BARS		#4 @ 12	#4 @ 12	#4 @ 12	#4 @ 12	#5 @ 12	#5 @ 12	#5 @ 12	#5 @ 9	#5 @ 9	#5 @ 9	#5 @ 9	#6 @ 12	#6 @ 9	#6 @ 9	#6 @ 9
* Conc CY/LF		0.20	0.20	0.21	0.23	0.24	0.26	0.29	0.30	0.32	0.35	0.37	0.39	0.44	0.46	0.48
* Reinf LB/LF		19	20	21	22	24	24	27	32	33	36	38	39	43	47	49
**CASE II	Ser (q'o, B')	0.41, 1.85	0.48, 1.89	0.55, 1.91	0.60, 1.95	0.62, 2.08	0.62, 2.20	0.63, 2.44	0.67, 2.61	0.71, 2.72	0.75, 2.87	0.80, 2.93	0.84, 3.10	0.88, 3.20	0.91, 3.44	0.95, 3.78
	Str (q'o, B')	1.07, 1.80	1.12, 1.83	1.20, 1.85	1.32, 1.89	1.34, 2.05	1.36, 2.19	1.39, 2.36	1.45, 2.48	1.50, 2.64	1.55, 2.77	1.62, 2.91	1.69, 3.16	1.72, 3.23	1.79, 3.33	1.82, 3.67
**CASE III	Ser (q'o, B')	0.56, 2.05	0.62, 2.08	0.70, 2.10	0.75, 2.12	0.81, 2.20	0.83, 2.38	0.85, 2.49	0.91, 2.60	0.94, 2.75	0.97, 2.81	1.02, 2.91	1.09, 3.05	1.12, 3.12	1.18, 3.23	1.22, 3.50
	Str (q'o, B')	0.91, 2.01	0.98, 2.05	1.06, 2.04	1.19, 2.06	1.22, 2.28	1.30, 2.34	1.36, 2.40	1.41, 2.51	1.49, 2.59	1.55, 2.68	1.65, 2.76	1.71, 2.90	1.79, 3.03	1.85, 3.07	1.90, 3.33

* Quantities include 1'-0" extension above the design "H" limit.
** q'o = net bearing stress (ksf), B' = effective footing width (ft)
Ser - service limit
Str - strength limit

REINFORCED CONCRETE HEADWALL

Quantities do not include added diagonals and do not consider pipe occupancy.

NOTE: Reinforced Concrete: fy = 60,000 psi
f'c = 3,600 psi
Earth Density: 120 pcf
Equivalent Fluid Pressure: 36 pcf

STATE OF CALIFORNIA
DEPARTMENT OF TRANSPORTATION

PIPE CULVERT HEADWALLS STRAIGHT AND "L"

NO SCALE

D89B

7-1-26

2026 STANDARD PLAN D89B

Return to Table of Contents

Dist	COUNTY	ROUTE	POST MILES TOTAL PROJECT	SHEET No.	TOTAL SHEETS

REGISTERED CIVIL ENGINEER

September 18, 2026
PLANS APPROVAL DATE

Carl M. Duan No. C59976 Exp. 6-30-28 CIVIL STATE OF CALIFORNIA REGISTERED PROFESSIONAL ENGINEER

THE STATE OF CALIFORNIA OR ITS OFFICERS OR AGENTS SHALL NOT BE RESPONSIBLE FOR THE ACCURACY OR COMPLETENESS OF SCANNED COPIES OF THIS PLAN SHEET.

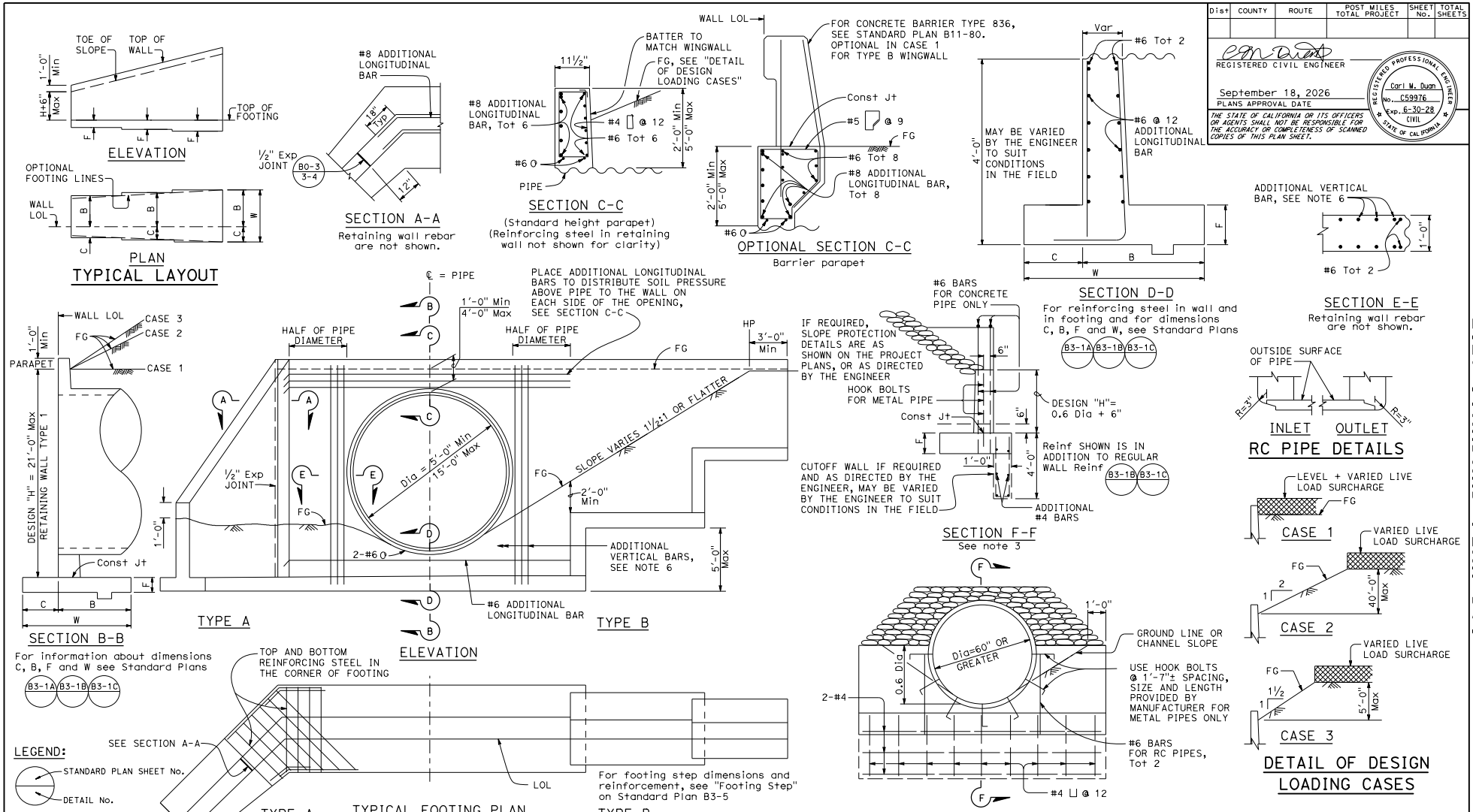

NOTES:

1. For design notes and details not shown for Type A and Type B wingwalls and headwalls, see Standard Plans B3-1A, B3-1B and B3-1C.
2. For Case 1 in Type B wall, concrete barrier can be installed on top of the headwall and wingwall as an option.
3. For details not shown for Type C wall, see Standard Plans B3-1B or B3-1C.
4. Elevation, length and angle of flare of wingwalls may be varied by The Engineer to suit conditions encountered in the field.
5. Wall height may be exceeded by 6" before going to the next greater "H".
6. Adjacent to each side of the pipe opening, place additional vertical bars bent into footing equivalent to half of the cutoff main bars by the pipe.

DESIGN NOTES

DESIGN: AASHTO LRFD Bridge Design Specifications, 8th Edition with California Amendments, Preface dated 2019

SOIL: γ = 120 pcf, ϕ = 34°

LS: Varied live load surcharge on level ground surface

REINFORCED CONCRETE: f'_c = 3,600 psi
f_y = 60,000 psi

STATE OF CALIFORNIA
DEPARTMENT OF TRANSPORTATION

PIPE CULVERT HEADWALLS, ENDWALLS AND WINGWALLS TYPES A, B AND C

NO SCALE

D90

7-1-26

Return to Table of Contents

Dist	COUNTY	ROUTE	POST MILES TOTAL PROJECT	SHEET No.	TOTAL SHEETS

REGISTERED CIVIL ENGINEER

September 18, 2026

PLANS APPROVAL DATE

Carl M. Duan No. C59976 Exp. 6-30-28 CIVIL STATE OF CALIFORNIA REGISTERED PROFESSIONAL ENGINEER

THE STATE OF CALIFORNIA OR ITS OFFICERS OR AGENTS SHALL NOT BE RESPONSIBLE FOR THE ACCURACY OR COMPLETENESS OF SCANNED COPIES OF THIS PLAN SHEET.

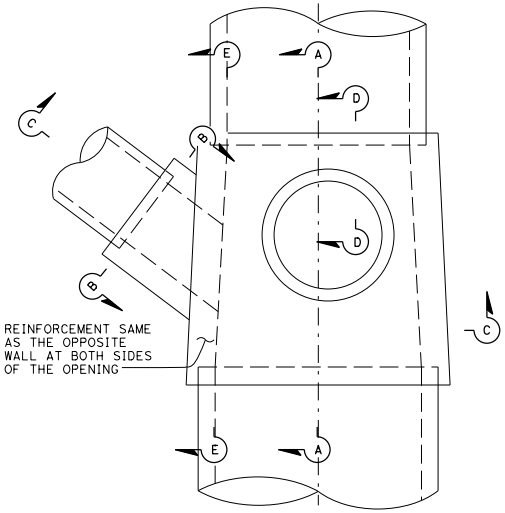

PLAN

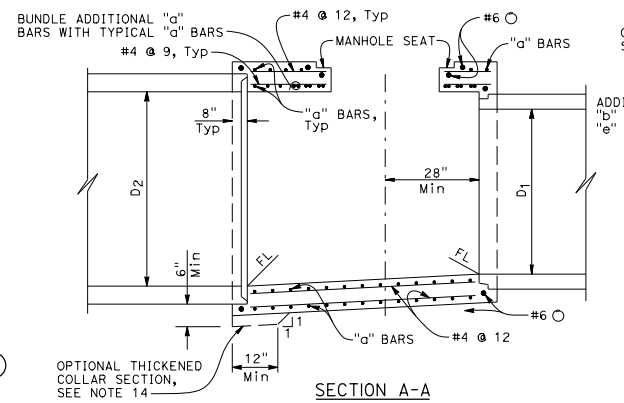

SECTION A-A

Lateral pipe opening not shown, see Section E-E.

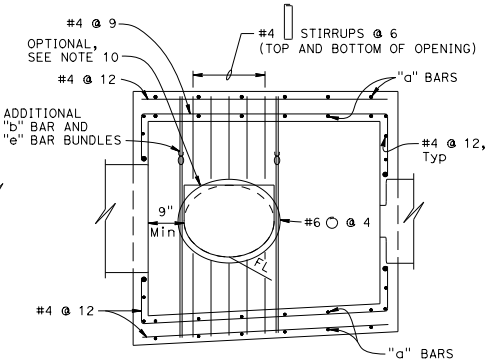

SECTION E-E

Not all the "b" BARS and "e" BARS in the wall are shown for clarity.

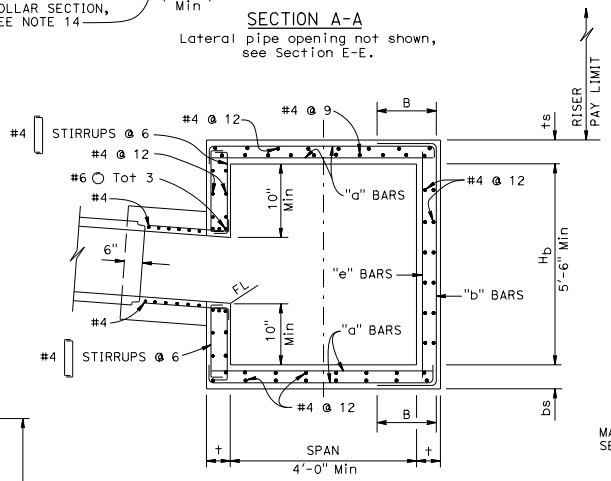

SECTION C-C

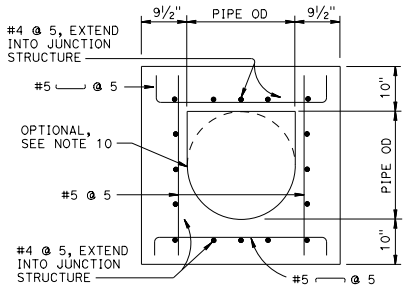

SECTION B-B

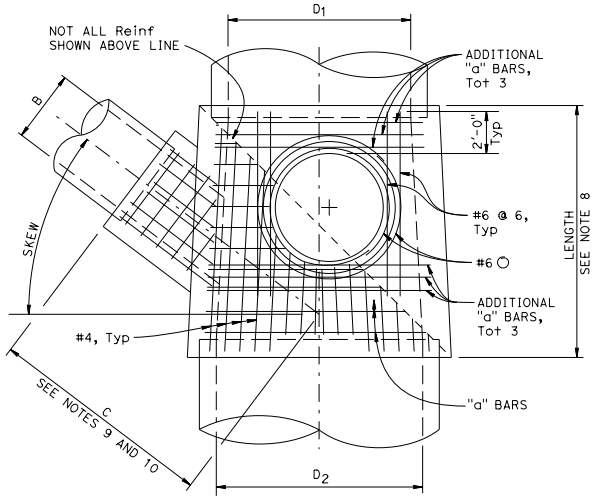

PLAN

Not all reinforcement shown for clarity

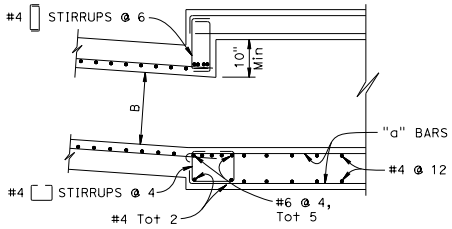

SECTION C-C (OPTIONAL)

Maximum fill height = 10.0'

For reinforcement and details not shown, see Section C-C.

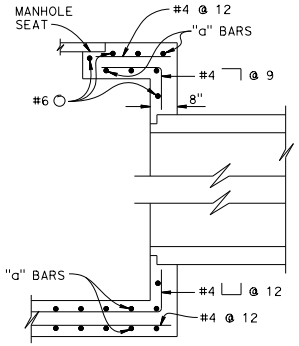

SECTION D-D

NOTE:

For Design Notes, General Notes, Design Tables and additional details, see Standard Plan D91B.

STATE OF CALIFORNIA
DEPARTMENT OF TRANSPORTATION

CAST-IN-PLACE REINFORCED CONCRETE JUNCTION STRUCTURE

NO SCALE

D91A

7-1-26

Return to Table of Contents

Dist	COUNTY	ROUTE	POST MILES TOTAL PROJECT	SHEET No.	TOTAL SHEETS

REGISTERED CIVIL ENGINEER

September 18, 2026
PLANS APPROVAL DATE

Carl M. Duan
No. C59976
Exp. 6-30-28
CIVIL
STATE OF CALIFORNIA
REGISTERED PROFESSIONAL ENGINEER

THE STATE OF CALIFORNIA OR ITS OFFICERS OR AGENTS SHALL NOT BE RESPONSIBLE FOR THE ACCURACY OR COMPLETENESS OF SCANNED COPIES OF THIS PLAN SHEET.

DESIGN NOTES:

Design Specifications:
AASHTO LRFD Bridge Design Specifications, 8th Edition with California Amendments, Preface dated 2019

Loading:
Live load: (AASHTO LRFD Chapter 3.6.1.2)
HL-93 consists of design truck or design tandem and design lane load

Dynamic Load Allowance: (Apply to top slab only)
$IM = 33(1.0-0.125D_E) \geq 0\%$
D_E = minimum depth of earth cover

Earth load:
Unfactored earth pressure:
120 pcf vertical
60 pcf horizontal

Max load factors: 1.35 vertical, 2.0 horizontal
Min load factors: 0.9 vertical, 0.5 horizontal

Unit stresses:
f'_c = 3,600 psi
f_y = 60,000 psi

Shear:
$V_c = \text{Beta}\sqrt{f'_c}\, b_v d_v$ (Pounds)

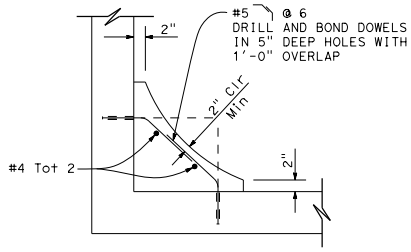

TYPICAL FILLET SECTION

Reinforcing steel in the junction structure not shown for clarity.

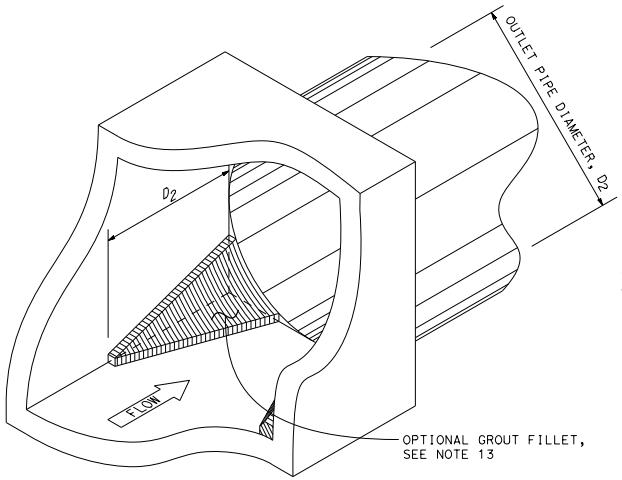

ISOMETRIC FILLET DETAIL

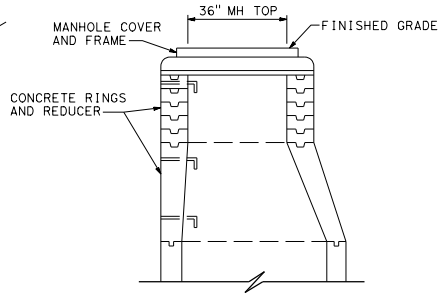

TYPE MH
UPPER STRUCTURE

GENERAL NOTES:

1. Each riser shall have a ladder. For details, see Standard Plan D93A.
2. Thickness of top slab shall vary as necessary to provide a level manhole seat. Hb is equal to the largest inside height dimension between the top and bottom slabs.
3. Reinforcing steel shall be placed with 2" clearance, except as shown.
4. Maximum skew for lateral pipe B is 45°.
5. Lateral pipe may be placed in either side of wall.
6. D_1 and D_2 are limited to 12' maximum diameter.
7. Side walls shall be flush with the inside of the inlet and outlet pipes when pipe diameters are 3.5' or more. Span is equal to the larger inside width dimension between the side walls.
8. Junction structure length shall be 6'-0" minimum.
9. When C is not specified, bring the lateral pipe directly into the wall of the structure.
10. When C is specified, the Contractor may, at his option, bring the lateral pipe directly into the wall for use as an inside form. A collar conforming with the wall thickness and reinforcement as shown in section B-B shall be poured around the pipe.
11. When the lateral pipe is extended directly into the wall, it shall be mitered as necessary to be flush with wall.
12. Adjacent to each side of the opening, place additional reinforcement equivalent to half the interrupted main reinforcement.
13. Optional fillet at outlet pipe placed at the direction of the Engineer.
14. Minimum thickness around pipe connections shall be 8". Wall and slab thicknesses may be increased beyond the minimums shown in the design tables or a thickened collar may be added to the local pipe connection area to achieve the minimum connection thickness. If a thickened collar is used, minimum width shall be one half of the corresponding pipe diameter and centered on the pipe section.
15. Soil pressures include soil weight of fill over junction structure, self weight of junction structure, and live load where applicable.

CIP JUNCTION STRUCTURE TABLE

HEIGHT, H_b	5'-6"		6'		7'		8'		9'		10'		11'		12'	
SPAN	4'		5'		6'		7'		8'		9'		10'		11'		12'	
Max EARTH COVER	10'	20'	10'	20'	10'	20'	10'	20'	10'	20'	10'	20'	10'	20'	10'	20'	10'	20'
CONCRETE																		
TOP SLAB THICKNESS (ts)	8"	8"	8"	8"	8"	9"	8"	10"	8"	11"	9"	12"	11"	13"	11"	14"	12"	16"
WALL THICKNESS (t)	8"	8"	8"	8"	8"	9"	8"	10"	8"	12"	9"	13"	12"	14"	13"	18"	14"	20"
BOTTOM SLAB THICKNESS (bs)	8"	8"	8"	8"	8"	9"	8"	10"	8"	12"	10"	13"	11"	14"	12"	15"	13"	17"
REINFORCEMENT																		
"a" BARS (SLABS, TOP AND BOTTOM)	#4 @ 10	#4 @ 6	#4 @ 6	#4 @ 5	#4 @ 5	#5 @ 6	#4 @ 5	#5 @ 5	#5 @ 6	#5 @ 5	#5 @ 5	#5 @ 5	#5 @ 5	#6 @ 6	#5 @ 5	#6 @ 6	#6 @ 6	#7 @ 6
"e" BARS (WALL Ext)	#4 @ 10	#4 @ 6	#4 @ 6	#4 @ 5	#4 @ 5	#4 @ 6	#4 @ 5	#4 @ 5	#4 @ 6	#4 @ 5	#4 @ 5	#5 @ 5	#5 @ 5	#6 @ 6	#4 @ 5	#6 @ 6	#5 @ 6	#5 @ 6
"b" BARS (WALL Int)	#4 @ 10	#4 @ 6	#4 @ 6	#4 @ 6	#4 @ 5	#4 @ 6	#4 @ 5	#4 @ 5	#4 @ 6	#4 @ 5	#4 @ 5	#5 @ 5	#4 @ 5	#5 @ 6	#4 @ 5	#6 @ 6	#5 @ 6	#5 @ 6
DIMENSION "B"	2'-4"	2'-4"	2'-7"	2'-3"	2'-7"	2'-5"	3'-0"	2'-9"	2'-11"	3'-3"	3'-6"	3'-8"	4'-0"	4'-1"	4'-4"	4'-5"	4'-10"	5'-0"
SOIL PRESSURES																		
SOIL PRESSURE (ksf), Ser	1.5	2.8	1.5	2.8	1.5	2.8	1.5	2.8	1.6	2.9	1.6	3.0	1.7	3.0	1.7	3.1	1.8	3.2
SOIL PRESSURE (ksf), Str	2.2	4.1	2.2	4.1	2.2	4.1	2.2	4.1	2.3	4.2	2.3	4.3	2.4	4.4	2.5	4.5	2.5	4.6

STATE OF CALIFORNIA
DEPARTMENT OF TRANSPORTATION

CAST-IN-PLACE REINFORCED CONCRETE JUNCTION STRUCTURE

NO SCALE

D91B

7-1-26

Return to Table of Contents

Dist	COUNTY	ROUTE	POST MILES TOTAL PROJECT	SHEET No.	TOTAL SHEETS

REGISTERED CIVIL ENGINEER

September 18, 2026

PLANS APPROVAL DATE

REGISTERED PROFESSIONAL ENGINEER Sean T. Penders No. C63744 Exp. 9-30-26 CIVIL STATE OF CALIFORNIA

THE STATE OF CALIFORNIA OR ITS OFFICERS OR AGENTS SHALL NOT BE RESPONSIBLE FOR THE ACCURACY OR COMPLETENESS OF SCANNED COPIES OF THIS PLAN SHEET.

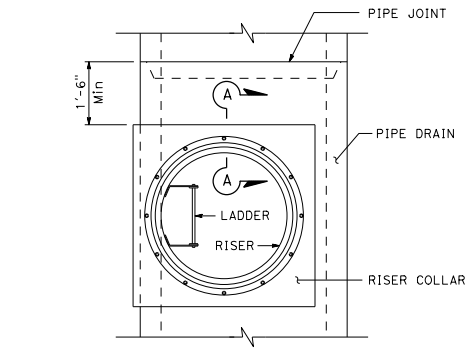

PLAN

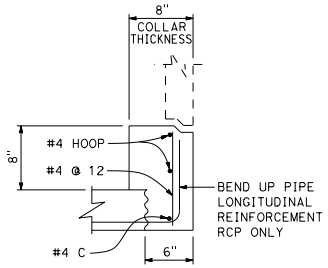

SECTION A-A

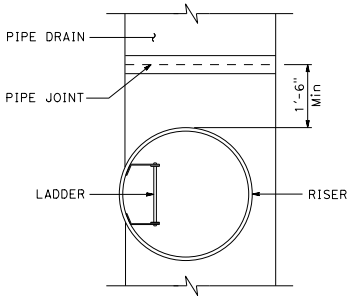

PLAN

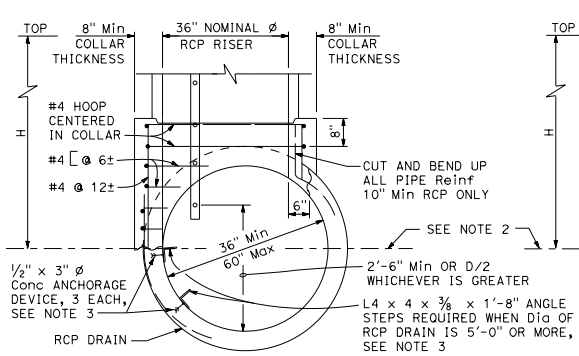

WITH 36" RCP RISER

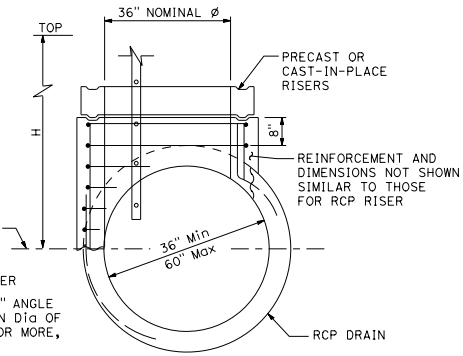

WITH 36" PRECAST RISERS

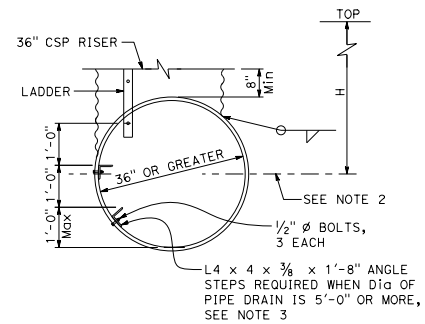

WITH 36" CSP RISER

CORRUGATED STEEL PIPE OR STRUCTURAL PLATE PIPE DRAIN

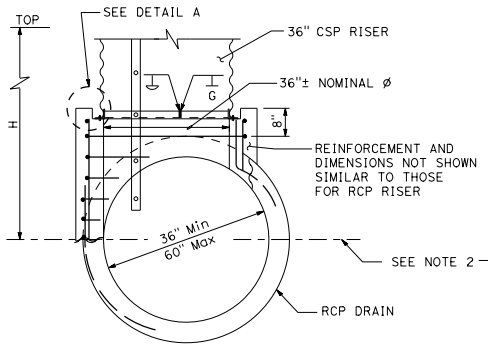

WITH 36" CSP RISER

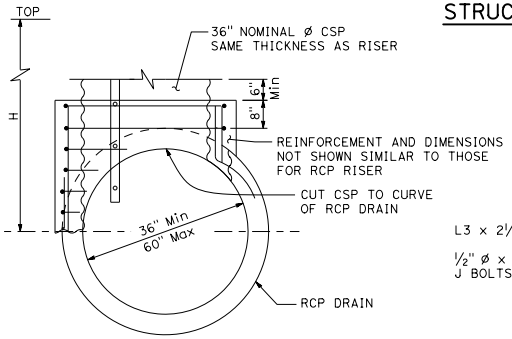

WITH 36" CSP RISER
ALTERNATIVE COLLAR DETAIL

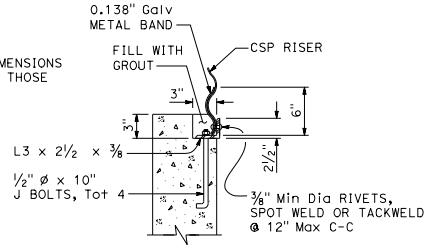

DETAIL A

REINFORCED CONCRETE PIPE DRAIN

NOTES:

1. Ladder may be constructed in one length at contractor's option on reinforced concrete pipe risers.
2. Pay limit for 36" risers to centerline of cross pipe.
3. Where angle steps are required, the lowest angle shall not be more than 1'-0" above the flowline of the drain. The distance between the uppermost angle step and the lowest rung of the ladder shall not exceed 1'-0".
4. Minimum earth cover = 2'-0".
5. Maximum earth cover = 20'-0".
6. Reinforcing steel shall be placed with 2" clearance, except as shown.
7. Refer to Standard Plan D75C for ladder details not shown.

DESIGN NOTES:

DESIGN SPECIFICATIONS:

AASHTO LRFD Bridge Design Specifications, 8th Edition
California Amendments, Preface dated 2019.

SOIL:

Friction Value: 34 Degrees
Unit Weight: 120 pcf

REINFORCED CONCRETE:

Compressive Strength: f'c = 3,000 psi
Yield Strength: fy = 60,000 psi

STATE OF CALIFORNIA
DEPARTMENT OF TRANSPORTATION

PIPE RISER CONNECTIONS

NO SCALE

D93A

2026 STANDARD PLAN D93A

7-1-26

Return to Table of Contents

Dist	COUNTY	ROUTE	POST MILES TOTAL PROJECT	SHEET No.	TOTAL SHEETS

REGISTERED CIVIL ENGINEER

September 18, 2026
PLANS APPROVAL DATE

REGISTERED PROFESSIONAL ENGINEER
Sean T. Penders
No. C63744
Exp. 9-30-26
CIVIL
STATE OF CALIFORNIA

THE STATE OF CALIFORNIA OR ITS OFFICERS OR AGENTS SHALL NOT BE RESPONSIBLE FOR THE ACCURACY OR COMPLETENESS OF SCANNED COPIES OF THIS PLAN SHEET.

NOTES:

1. Structure at top of riser may be any standard drainage inlet or pipe inlet.
2. Diameter of slip joint to be 3" greater than diameter of riser.
3. Plastic pipe riser may be substituted for CSP riser shown. Slip joint diameter to be as necessary to accommodate plastic pipe outside diameter.
4. For plastic pipe cross drain, use fabricated reducing tee of same material as cross drain as appropriate to provide watertight connection.

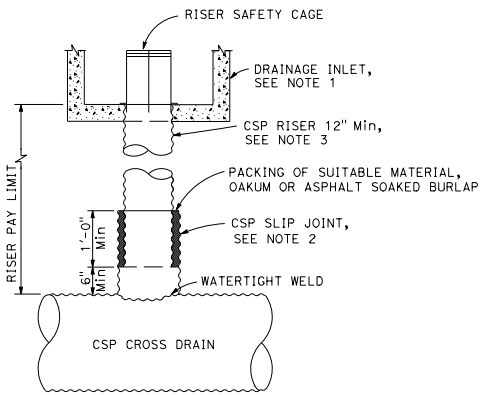

CSP RISER FOR DRAINAGE INLET

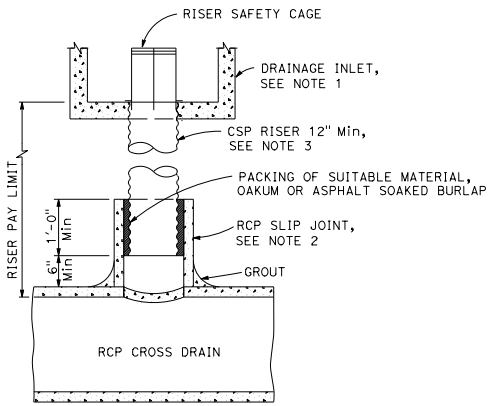

CSP RISER FOR DRAINAGE INLET

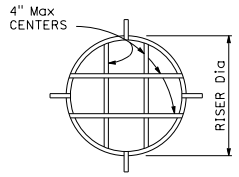

PLAN

#3 Bars throughout with welded joints

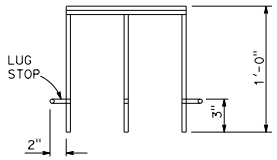

ELEVATION

RISER SAFETY CAGE DETAIL

STATE OF CALIFORNIA
DEPARTMENT OF TRANSPORTATION

DRAINAGE INLET RISER CONNECTIONS

NO SCALE

D93B

2026 STANDARD PLAN D93B

7-1-26

Return to Table of Contents

Dist	COUNTY	ROUTE	POST MILES TOTAL PROJECT	SHEET No.	TOTAL SHEETS

REGISTERED CIVIL ENGINEER

September 18, 2026
PLANS APPROVAL DATE

REGISTERED PROFESSIONAL ENGINEER Sean T. Penders No. C63744 Exp. 9-30-26 CIVIL STATE OF CALIFORNIA

THE STATE OF CALIFORNIA OR ITS OFFICERS OR AGENTS SHALL NOT BE RESPONSIBLE FOR THE ACCURACY OR COMPLETENESS OF SCANNED COPIES OF THIS PLAN SHEET.

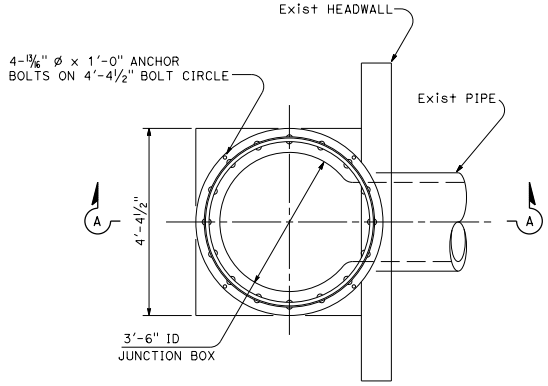

PLAN

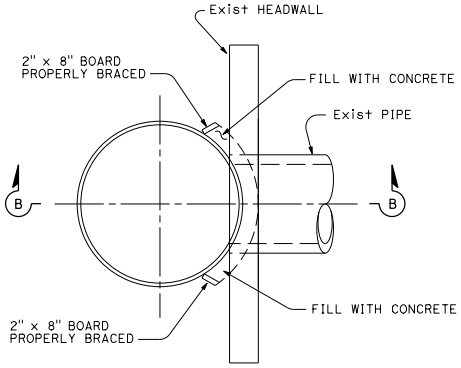

PLAN

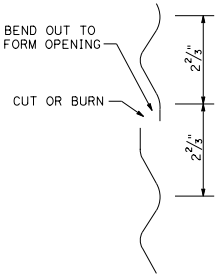

DETAIL "A"

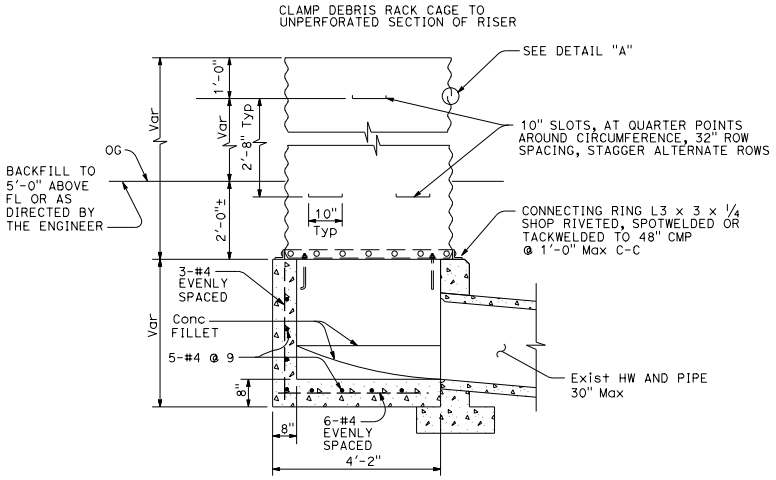

SECTION A-A

CMP RISER

And junction box

TYPE A

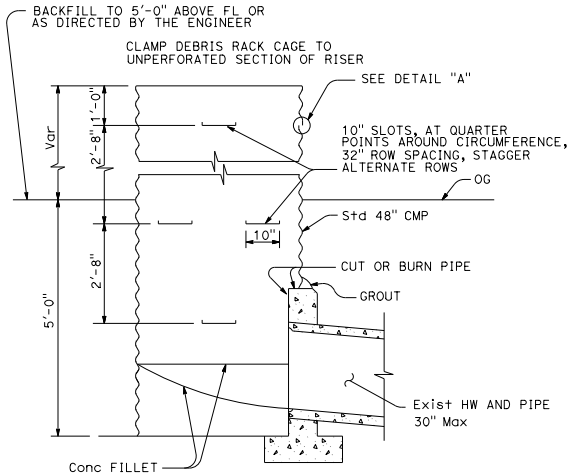

SECTION B-B

CMP RISER

TYPE B

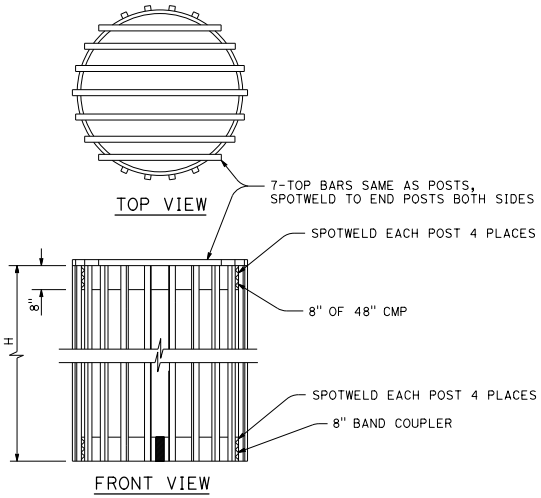

H = 22 Posts- 6'-0" or 8'-0" lengths use 2" pipe or L2 x 2 x 3/16 (Galvanized steel or aluminum)

DEBRIS RACK CAGE

STATE OF CALIFORNIA
DEPARTMENT OF TRANSPORTATION

PIPE RISER WITH DEBRIS RACK CAGE

NO SCALE

D93C

2026 STANDARD PLAN D93C

7-1-26

Return to Table of Contents

Dist	COUNTY	ROUTE	POST MILES TOTAL PROJECT	SHEET No.	TOTAL SHEETS

REGISTERED CIVIL ENGINEER

September 18, 2026

PLANS APPROVAL DATE

REGISTERED PROFESSIONAL ENGINEER Sean T. Penders No. C63744 Exp. 9-30-26 CIVIL STATE OF CALIFORNIA

THE STATE OF CALIFORNIA OR ITS OFFICERS OR AGENTS SHALL NOT BE RESPONSIBLE FOR THE ACCURACY OR COMPLETENESS OF SCANNED COPIES OF THIS PLAN SHEET.

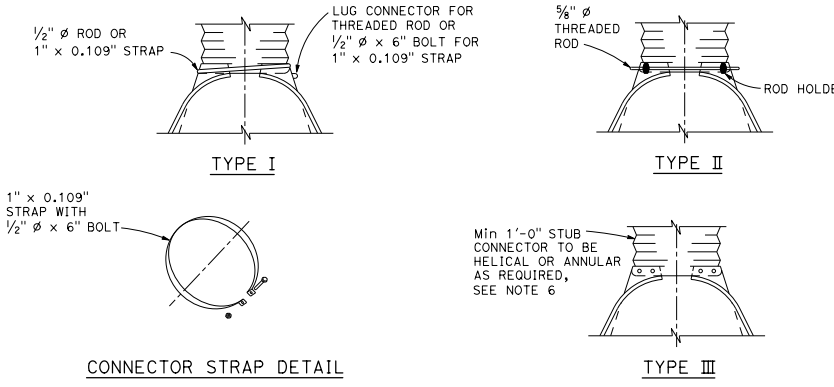

ALTERNATIVE CONNECTIONS FOR PIPE TO METAL FLARED END SECTIONS

See Note 7

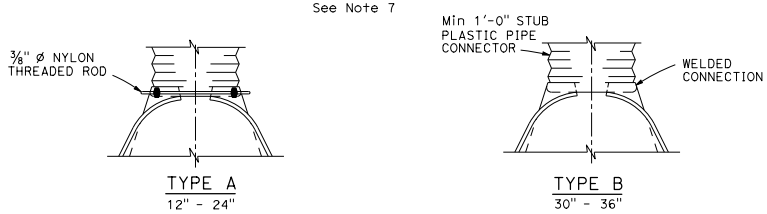

ALTERNATIVE CONNECTIONS FOR PIPE TO PLASTIC FLARED END SECTIONS

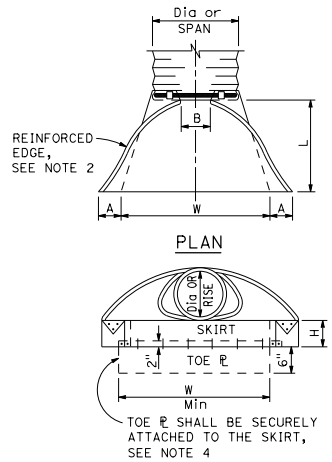

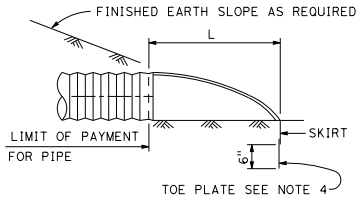

TYPICAL CROSS-SECTION

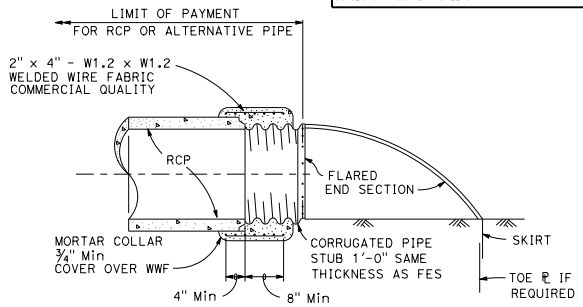

FLARED END SECTION CONNECTION TO RCP

CIRCULAR PIPES						
PIPE Dia	END SECTION THICKNESS	DIMENSION				
		A	B	H	L	W
		1"±	Max	1"±	1½"±	2"±
12"*	0.064"	6"	6"	6"	1'-9"	2'-0"
15"*	0.064"	7"	8"	6"	2'-2"	2'-6"
18"*	0.064"	8"	10"	6"	2'-7"	3'-0"
21"	0.064"	9"	1'-0"	6"	3'-0"	3'-6"
24"*	0.064"	10"	1'-1"	6"	3'-5"	4'-0"
30"*	0.079"	1'-0"	1'-4"	8"	4'-3"	5'-0"
36"*	0.079"	1'-2"	1'-7"	9"	5'-0"	6'-0"
42"	0.109"	1'-4"	1'-10"	11"	5'-9"	7'-0"
48"	0.109"	1'-6"	2'-3"	1'-0"	6'-6"	7'-6"
54"	0.109"	1'-6"	2'-6"	1'-0"	7'-0"	8'-6"
60"	0.109"	1'-6"	2'-9"	1'-0"	7'-3"	9'-6"
66"	0.109"	1'-6"	3'-0"	1'-0"	7'-3"	10'-0"
72"	0.109"	1'-6"	3'-3"	1'-0"	7'-3"	10'-6"
78"	0.109"	1'-6"	3'-6"	1'-0"	7'-3"	11'-0"
84"	0.109"	1'-6"	3'-9"	1'-0"	7'-3"	11'-6"

* Equivalent plastic FES to meet AASHTO M-294 and ASTM D-1248 Specifications, and shall conform to all dimensions shown above except for end section thickness, which may be 0.004" thinner.

PIPE-ARCHES							
DESIGNATION		END SECTION THICKNESS	DIMENSION				
			A	B	H	L	W
SPAN	RISE		1"±	Max	1"±	1½"±	2"±
21"	15"	0.064"	7"	10"	6"	1'-11"	3'-0"
24"	18"	0.064"	8"	1'-0"	6"	2'-4"	3'-6"
28"	20"	0.064"	9"	1'-2"	6"	2'-8"	4'-0"
35"	24"	0.079"	10"	1'-4"	6"	3'-3"	5'-0"
42"	29"	0.079"	1'-0"	1'-6"	8"	3'-10"	6'-3"
49"	33"	0.109"	1'-1"	1'-9"	9"	4'-5"	7'-1"
57"	38"	0.109"	1'-6"	2'-2"	1'-0"	5'-3"	7'-6"
64"	43"	0.109"	1'-6"	2'-6"	1'-0"	5'-10"	8'-6"
71"	47"	0.109"	1'-6"	2'-9"	1'-0"	6'-5"	9'-6"
77"	52"	0.109"	1'-6"	3'-0"	1'-0"	6'-5"	10'-6"
83"	57"	0.109"	1'-6"	3'-3"	1'-0"	6'-5"	11'-6"

FLARED END SECTIONS FOR CORRUGATED METAL AND PLASTIC PIPE CULVERTS

NOTES:

1. All 3-piece bodies to have 0.109" thick sides and 0.138" thick center panels. Width of center panels to be greater than 20% of the pipe periphery. Multiple panel bodies to have lap seams which are to be tightly joined by rivets or bolts.
2. Reinforced edges to be supplemented with stiffener angles for the 60" thru 84" round, 77" x 52" and 83" x 57" pipe-arch sizes. The angles will be 2" x 2" x ¼" for the 60" thru 72" round, 77" x 52" and 83" x 57" pipe-arch sizes and 2½" x 2½" x ¼" for 78" and 84" round. The angles to be attached by ⅜" ø nuts and bolts.
3. Angle reinforcement shall be placed under the center panel seams on the 77" x 52" and 83" x 57" pipe-arch sizes.
4. Toe plate to be available as an accessory when specified.
5. End of pipe to be finished with annular corrugations to conform flared end section so that minimal leakage results from the connection. Other designs may be used with approval of the Engineer.
6. For 12" thru 24" helical end section connection, a universal coupling band attached to the metal end section by rivets, bolts or 1" long shop tack welds spaced at same intervals as dimples may be used in place of the 12" stub. See Standard Plan D97C.
7. The types of alternative connections for pipe to metal flared end sections shall conform to the following:

   CIRCULAR PIPES -
   12" thru 24" Type I or III
   30" thru 84" Type II or III

   PIPE-ARCHES -
   21" x 15" thru 57" x 38" Type II or III
   64" x 43" thru 83" x 57" Type III

STATE OF CALIFORNIA
DEPARTMENT OF TRANSPORTATION

METAL AND PLASTIC FLARED END SECTIONS

NO SCALE

D94A

7-1-26

2026 STANDARD PLAN D94A

Return to Table of Contents

Dist	COUNTY	ROUTE	POST MILES TOTAL PROJECT	SHEET No.	TOTAL SHEETS

REGISTERED CIVIL ENGINEER

September 18, 2026

PLANS APPROVAL DATE

REGISTERED PROFESSIONAL ENGINEER Sean T. Penders No. C63744 Exp. 9-30-26 CIVIL STATE OF CALIFORNIA

THE STATE OF CALIFORNIA OR ITS OFFICERS OR AGENTS SHALL NOT BE RESPONSIBLE FOR THE ACCURACY OR COMPLETENESS OF SCANNED COPIES OF THIS PLAN SHEET.

NOTES:

1. Contractor has the option of using either Type A or B precast concrete flared end section.
2. "C" dimension varies by manufacturer and will be paid for as concrete pipe.

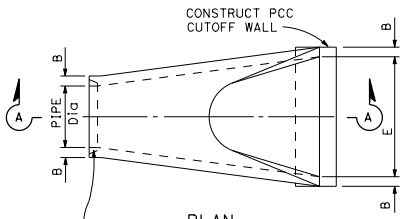

PLAN

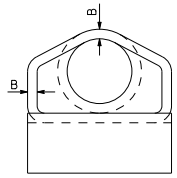

END VIEW

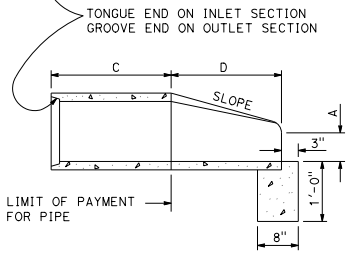

SECTION A-A

MINIMUM DIMENSIONS						
PIPE Dia	A	B	C	D	E	SLOPE
12"	4"	1¾"	SEE NOTE 2	2'-0"	2'-0"	2:1 OR FLATTER
18"	9"	2¼"		2'-3"	3'-0"	
24"	9½"	2¾"		3'-7½"	4'-0"	
30"	1'-0"	3¼"		4'-6"	5'-0"	
36"	1'-3"	3¾"		5'-3"	6'-0"	
42"	1'-9"	4¼"		5'-3"	6'-6"	
48"	2'-0"	4¾"		6'-0"	7'-0"	
54"	2'-3"	5¼"		5'-5"	7'-6"	

PRECAST CONCRETE FLARED END SECTION TYPE A

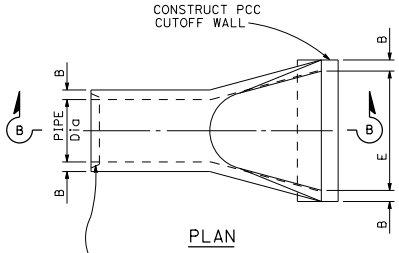

PLAN

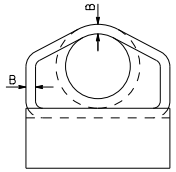

END VIEW

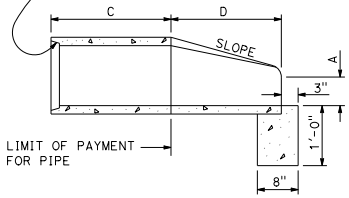

SECTION B-B

MINIMUM DIMENSIONS						
PIPE Dia	A	B	C	D	E	SLOPE
12"	4"	1½"	SEE NOTE 2	1'-10"	2'-0"	2:1 OR FLATTER
18"	9"	1¾"		2'-1"	3'-0"	
24"	9½"	2¼"		3'-6"	4'-0"	
30"	1'-0"	2¾"		4'-5"	5'-0"	
36"	1'-3"	3¼"		5'-2"	6'-0"	
42"	1'-9"	3½"		5'-3"	6'-6"	
48"	2'-0"	4"		6'-0"	7'-0"	
54"	2'-3"	4⅜"		5'-6"	6'-10"	

PRECAST CONCRETE FLARED END SECTION TYPE B

STATE OF CALIFORNIA
DEPARTMENT OF TRANSPORTATION

CONCRETE FLARED END SECTIONS

NO SCALE

D94B

7-1-26

2026 STANDARD PLAN D94B

Return to Table of Contents

Dist	COUNTY	ROUTE	POST MILES TOTAL PROJECT	SHEET No.	TOTAL SHEETS

REGISTERED CIVIL ENGINEER

September 18, 2026
PLANS APPROVAL DATE

REGISTERED PROFESSIONAL ENGINEER Sean T. Penders No. C63744 Exp. 9-30-26 CIVIL STATE OF CALIFORNIA

THE STATE OF CALIFORNIA OR ITS OFFICERS OR AGENTS SHALL NOT BE RESPONSIBLE FOR THE ACCURACY OR COMPLETENESS OF SCANNED COPIES OF THIS PLAN SHEET.

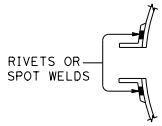

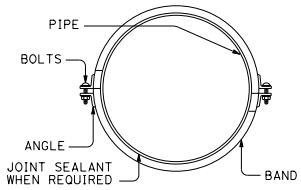

END VIEW

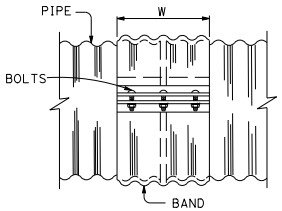

SIDE VIEW

ANNULAR BAND

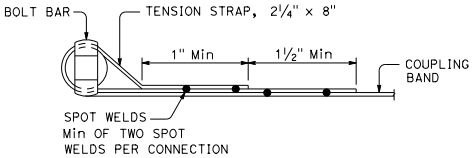

STRAP DETAIL

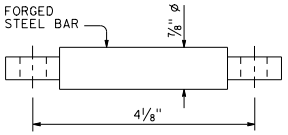

TOP VIEW

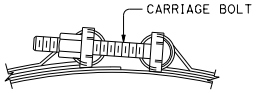

BOLT DETAIL

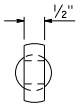

LEFT SIDE VIEW

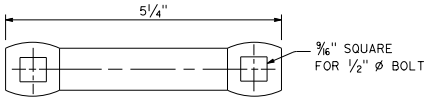

FRONT VIEW

BAR DETAIL

BAR AND STRAP CONNECTOR

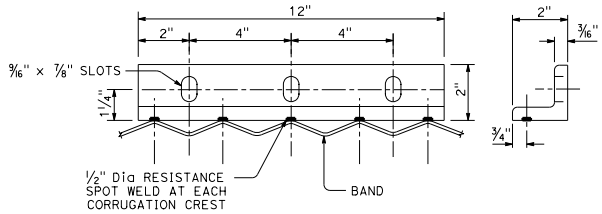

SIDE VIEW END VIEW

2" x 2" x 3/16" ANGLE

See tables on Standard Plans D97E, D97F and D97G for width, W=12" shown.

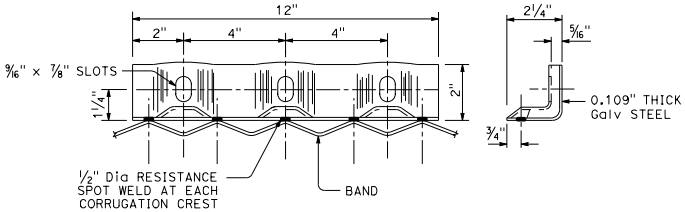

SIDE VIEW END VIEW

DIE-FORMED ANGLE

See tables on Standard Plans D97E and D97G for width, W=12" shown.

Alternate only for standard joints on pipes through 72" diameter and downdrains through 24" diameter.

ANGLE CONNECTORS

NOTES:

1. All ferrous metal coupling band connection hardware shall be galvanized or electroplated in accordance with the Standard Specifications.
2. Dimensions and thicknesses shown are minimum.
3. Spot welds shall develop minimum required strength of strap.
4. Fillet welds of equivalent strength may be substituted for spot welds or rivets.

STATE OF CALIFORNIA
DEPARTMENT OF TRANSPORTATION

CORRUGATED METAL PIPE COUPLING DETAILS No. 1 ANNULAR COUPLING BAND, BAR AND STRAP, AND ANGLE CONNECTIONS

NO SCALE

D97A

7-1-26

2026 STANDARD PLAN D97A

Return to Table of Contents

Dist	COUNTY	ROUTE	POST MILES TOTAL PROJECT	SHEET No.	TOTAL SHEETS

REGISTERED CIVIL ENGINEER

September 18, 2026

PLANS APPROVAL DATE

REGISTERED PROFESSIONAL ENGINEER Sean T. Penders No. C63744 Exp. 9-30-26 CIVIL STATE OF CALIFORNIA

THE STATE OF CALIFORNIA OR ITS OFFICERS OR AGENTS SHALL NOT BE RESPONSIBLE FOR THE ACCURACY OR COMPLETENESS OF SCANNED COPIES OF THIS PLAN SHEET.

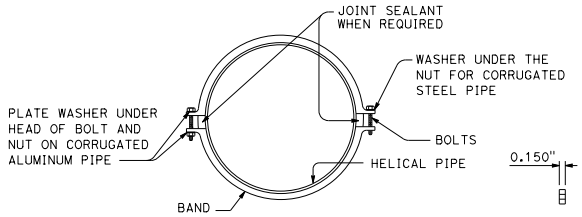

END VIEW

PLATE WASHER

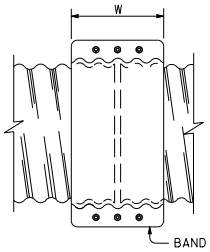

TOP VIEW

TWO PIECE INTEGRAL FLANGE DIE FORMED BAND

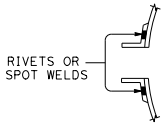

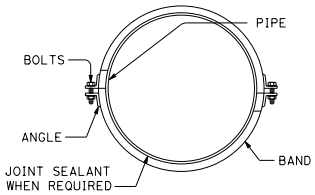

END VIEW

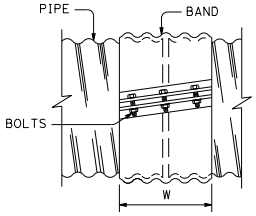

SIDE VIEW

HELICAL COUPLING BANDS

HELICAL BAND

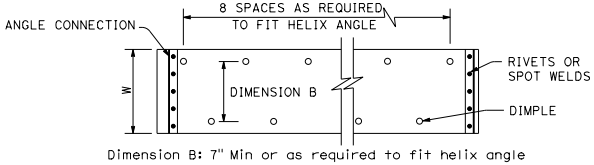

Dimension B: 7" Min or as required to fit helix angle

PLAN

SECTION THRU DIMPLES

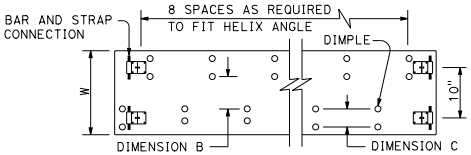

Dimension B: 7" Min or as required to fit helix angle.
Dimension C: 2 2/3" Min or as required to fit helix angle.
(Double dimple shown for use with 16 1/4" bands)

PLAN

NOTES:

1. All ferrous metal coupling band connection hardware shall be galvanized or electroplated in accordance with the Standard specifications.
2. Dimensions and thicknesses shown are minimum.
3. Spot welds shall develop minimum required strength of strap.
4. Fillet welds of equivalent strength may be substituted for spot welds or rivets.

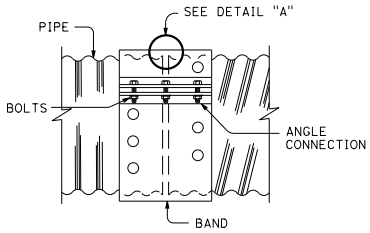

SIDE VIEW

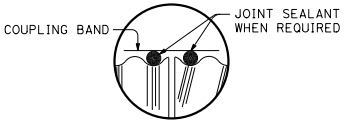

DETAIL "A"

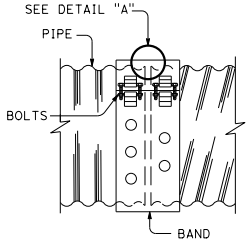

SIDE VIEW

UNIVERSAL COUPLING BANDS

STATE OF CALIFORNIA
DEPARTMENT OF TRANSPORTATION

CORRUGATED METAL PIPE COUPLING DETAILS No. 3 HELICAL AND UNIVERSAL COUPLERS

NO SCALE

D97C

2026 STANDARD PLAN D97C

7-1-26

Return to Table of Contents

Dist	COUNTY	ROUTE	POST MILES TOTAL PROJECT	SHEET No.	TOTAL SHEETS

REGISTERED CIVIL ENGINEER

September 18, 2026

PLANS APPROVAL DATE

REGISTERED PROFESSIONAL ENGINEER Sean T. Penders No. C63744 Exp. 9-30-26 CIVIL STATE OF CALIFORNIA

THE STATE OF CALIFORNIA OR ITS OFFICERS OR AGENTS SHALL NOT BE RESPONSIBLE FOR THE ACCURACY OR COMPLETENESS OF SCANNED COPIES OF THIS PLAN SHEET.

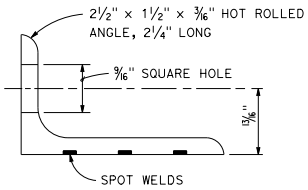

ANGLE

NOTES:

1. Dimensions and thicknesses shown are minimum.
2. Spot welds shall develop minimum required strength of strap.
3. Fillet welds of equivalent strength may be substituted for spot welds or rivets.
4. Dimension depends upon whether end condition is lips up or lips down.

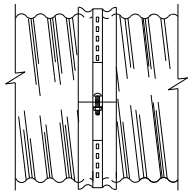

SIDE VIEW
ANGLE

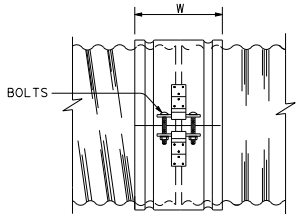

SIDE VIEW
SINGLE BAR AND STRAP

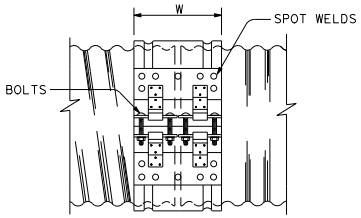

SIDE VIEW
DOUBLE BAR AND STRAP

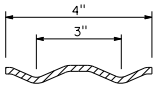

SECTION

H-4 HUGGER BAND

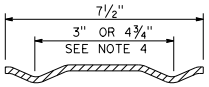

SECTION

H-7 HUGGER BAND

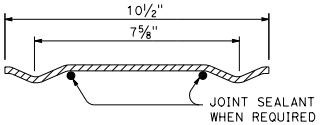

SECTION

H-10 HUGGER BAND

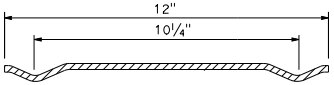

SECTION

H-12 HUGGER BAND

HUGGER COUPLING BANDS

STATE OF CALIFORNIA
DEPARTMENT OF TRANSPORTATION

CORRUGATED METAL PIPE COUPLING DETAILS No. 4 HUGGER COUPLING BANDS

NO SCALE

D97D

7-1-26

2026 STANDARD PLAN D97D

Return to Table of Contents

Dist	COUNTY	ROUTE	POST MILES TOTAL PROJECT	SHEET No.	TOTAL SHEETS

REGISTERED CIVIL ENGINEER

September 18, 2026

PLANS APPROVAL DATE

REGISTERED PROFESSIONAL ENGINEER Sean T. Penders No. C63744 Exp. 9-30-26 CIVIL STATE OF CALIFORNIA

THE STATE OF CALIFORNIA OR ITS OFFICERS OR AGENTS SHALL NOT BE RESPONSIBLE FOR THE ACCURACY OR COMPLETENESS OF SCANNED COPIES OF THIS PLAN SHEET.

ANNULAR AND HELICAL PROFILE

COUPLING TYPE	PIPE CORRUGATION	PIPE SIZE	W OR A	PIPE WALL THICKNESS CSP	PIPE WALL THICKNESS CAP	BAND THICKNESS CSP	BAND THICKNESS CAP	BAR AND STRAP (CSP ONLY) STRAP THICKNESS	BAR AND STRAP BOLTS Dia	BAR AND STRAP BAR Dia	BAR AND STRAP BAR YIELD STRENGTH	ANGLE DIMENSIONS CSP	ANGLE DIMENSIONS CAP	ANGLE BOLTS (No.- Dia) CSP	ANGLE BOLTS (No.- Dia) CAP	ANGLE RIVETS ANGLE TO BAND CSP	ANGLE RIVETS ANGLE TO BAND CAP	ANGLE SPOT WELDS ANGLE TO BAND CSP
TWO PIECE INTEGRAL FLANGE	1½' × ¼"	6"-10"	7"	0.052"-0.079"	0.048"-0.060"	0.052"	0.060"							2-⅜"	2-⅜"			
		12"-18"	7"	0.052"-0.079"		0.064"								2-½"				
	2⅔" × ½"	12"-24"	7"	0.052"-0.079"	0.060"-0.105"	0.064"	0.060"							2-½"	2-½"			
UNIVERSAL	2⅔" × ½"	THROUGH 36"	12"	0.052"-0.138"	0.060"-0.135"	0.052"	0.060"					2" × 2" × 3/16"	2" × 2" × 3/16"	3-½"	3-½"	3-⅜"	3-⅜"	3-½"
		42"-60"	12"	0.052"-0.168"	0.075"-0.164"	0.052"	0.060"					2" × 2" × 3/16"	2" × 2" × 3/16"	3-½"	3-½"	3-⅜"	3-⅜"	5-½"
		THROUGH 72"	12"	0.052"-0.168"	0.164"	0.052"	0.105"	0.079"	½"	⅞"	32 ksi	2" × 2" × 3/16"	2" × 2" × 3/16"	3-½"	3-½"	3-⅜"	3-⅜"	5-½"
		78"-84"	16¼"	0.168"		0.079"		DOUBLE 0.079"	½"	⅞"	32 ksi							
ANNULAR	2⅔" × ½"	THROUGH 36"	7"	0.064"-0.138"	0.060"-0.135"	0.052"	0.060"	0.079"	½"	⅞"	32 ksi	2" × 2" × 3/16"	2" × 2" × 3/16"	2-½"	2-½"	3-⅜"	3-⅜"	3-½"
		42"-72"	12"	0.064"-0.168"	0.075"-0.164"	0.052"	0.105"	0.079"	½"	⅞"	32 ksi	2" × 2" × 3/16"	2" × 2" × 3/16"	3-½"	3-½"	3-⅜"	3-⅜"	5-½"
		78"-84"	12"	0.168"		0.079"		0.109"	½"	⅞"	45 ksi	2" × 2" × 3/16"		3-½"		3-⅜"		5-½"
	3" × 1"	48"-90"	14"	0.064"-0.109"		0.052"		0.079"	½"	⅞"	32 ksi	2" × 2" × 3/16"		3-½"		3-⅜"		5-½"
		96"-120"	14"	0.079"-0.109"		0.052"		0.109"	½"	⅞"	45 ksi	2" × 2" × 3/16"		3-½"		4-⅜"		
		42"-108"	14"		0.060"-0.135"		0.060"						2" × 2" × 3/16"		3-½"		3-⅜"	
HELICAL	2⅔" × ½"	THROUGH 36"	12"	0.052"-0.138"	0.060"-0.135"	0.052"	0.060"	0.079"	½"	⅞"	32 ksi	2" × 2" × 3/16"	2" × 2" × 3/16"	3-½"	3-½"	3-⅜"	3-⅜"	3-½"
		42"-72"	12"	0.052"-0.168"	0.075"-0.164"	0.052"	0.060"	0.079"	½"	⅞"	32 ksi	2" × 2" × 3/16"	2" × 2" × 3/16"	3-½"	3-½"	3-⅜"	3-⅜"	5-½"
		78"-84"	12"	0.168"		0.079"		0.109"	½"	⅞"	45 ksi	2" × 2" × 3/16"		3-½"		3-⅜"		5-½"
	3" × 1"	48"-90"	14"	0.064"-0.109"		0.052"		0.079"	½"	⅞"	32 ksi	2" × 2" × 3/16"		3-½"		3-⅜"		5-½"
		96"-120"	14"	0.079"-0.109"		0.052"		0.109"	½"	⅞"	45 ksi	2" × 2" × 3/16"		3-½"		4-⅜"		
		42"-108"	14"		0.060"-0.135"		0.060"						2" × 2" × 3/16"		3-½"		3-⅜"	
HUGGER	2⅔" × ½" REROLLED END	12"-54"	4"	0.052"-0.109"		0.052"						2½" × 1½" × 3/16"	2½" × 1½" × 3/16"	1-½"				3-½"
		60"-66"	4"	0.109"		0.064"						2½" × 1½" × 3/16"	2½" × 1½" × 3/16"	1-½"				3-½"
		36"-48"	4"	0.138"		0.064"						2½" × 1½" × 3/16"	2½" × 1½" × 3/16"	1-½"				3-½"
		THROUGH 72"	10½"	0.052"-0.168"		0.052"		0.079"	½"	⅞"	32 ksi							
		78"-84"	10½"	0.168"		0.079"		0.109"	½"	⅞"	45 ksi							
	3" × 1" REROLLED END	48"-90"	10½"	0.064"-0.109"		0.052"		0.079"	½"	⅞"	32 ksi							
		96"-120"	10½"	0.079"-0.109"		0.052"		0.109"	½"	⅞"	45 ksi							
	5" × 1" REROLLED END	48"-66"	7½"	0.064"-0.109"		0.064"		0.079"	½"	⅞"	32 ksi	2½" × 1½" × 3/16"	2½" × 1½" × 3/16"	1-½"				3-½"
		72"-90"	7½"	0.064"-0.079"		0.064"		0.079"	½"	⅞"	32 ksi	2½" × 1½" × 3/16"	2½" × 1½" × 3/16"	1-½"				3-½"
		48"-90"	7½"	0.064"-0.138"		0.064"		0.079"	½"	⅞"	32 ksi							
		48"-120"	12" SEE	0.064"-0.109"		0.064"		0.079"	½"	⅞"	32 ksi							
		48"-84"	12" NOTE	0.138"		0.064"		0.079"	½"	⅞"	32 ksi							
		90"-120"	12" 10	0.138"		0.064"		DOUBLE 0.079"	½"	⅞"	32 ksi							

SPIRAL RIB PROFILE

COUPLING TYPE	PIPE CORRUGATION	PIPE SIZE	W	PIPE WALL THICKNESS SSRP	PIPE WALL THICKNESS ASRP	BAND THICKNESS SSRP	BAND THICKNESS ASRP	BAR AND STRAP (SSRP ONLY) STRAP THICKNESS	BAR AND STRAP BOLTS Dia	BAR AND STRAP BAR Dia	BAR AND STRAP BAR YIELD STRENGTH	ANGLE DIMENSIONS SSRP	ANGLE DIMENSIONS ASRP	ANGLE BOLTS (No.- Dia) SSRP	ANGLE BOLTS (No.- Dia) ASRP	ANGLE RIVETS ANGLE TO BAND SSRP	ANGLE RIVETS ANGLE TO BAND ASRP	ANGLE SPOT WELDS ANGLE TO BAND SSRP
ANNULAR	2⅔" × ½" * REROLLED END	24"-36"	12"	0.064"-0.109"	0.060"-0.105"	0.052"	0.060"	0.079"	½"	⅞"	32 ksi	2" × 2" × 3/16"	2" × 2" × 3/16"	3-½"	3-½"	3-⅜"	3-⅜"	5-½"
		42"-60"	12"	0.064"-0.109"	0.075"-0.105"	0.052"	0.105"	0.079"	½"	⅞"	32 ksi	2" × 2" × 3/16"	2" × 2" × 3/16"	3-½"	3-½"	3-⅜"	3-⅜"	5-½"
		66"-72"	12"	0.064"-0.109"		0.052"		0.079"	½"	⅞"	32 ksi	2" × 2" × 3/16"	2" × 2" × 3/16"	3-½"	3-½"	3-⅜"	3-⅜"	5-½"
		78"-114"	12"	0.079"-0.109"		0.079"		0.109"	½"	⅞"	45 ksi	2" × 2" × 3/16"	2" × 2" × 3/16"	3-½"	3-½"	3-⅜"	3-⅜"	5-½"
HUGGER	2⅔" × ½" * REROLLED END	24"-72"	10½"	0.064"-0.109"		0.052"		0.079"	½"	⅞"	32 ksi							
		78"-84"	10½"	0.109"		0.079"		0.109"	½"	⅞"	45 ksi							

* See Note 13.

NOTES:

1. For helically corrugated coupling bands, the connection angles may be oriented parallel to the pipe axis, provided connecting holes are slotted lengthwise sufficiently to allow adjustment for the helix angle.
2. Tension strap may be connected to band with either spot welds or fillet welds that develop minimum required strength of strap.
3. Use 1¼" gage line dimension on attached angle leg for rivets and spot welds.
4. Band thickness shall not be less than:
   a. 3 standard thicknesses lighter than the thickness of the pipe for Corrugated Steel Pipe.
   b. 2 standard thicknesses lighter than the thickness of the pipe and in no case lighter than 0.060" for Corrugated Aluminum Pipe.
5. Dimensions, thicknesses and strengths shown are minimum.
6. For pipe arches use same width band as for round pipe of equal periphery.
7. Fillet welds of equivalent strength may be substituted for spot welds or rivets.
8. Spot welds shall develop minimum required strength of strap.
9. Pipe with rerolled ends having at least two 2⅔" × ½" annular corrugations at each end with or without an upturned flange may be connected with any of the annular coupling bands shown for pipe of the same diameter and wall thickness and having 2⅔" × ½" corrugations.
10. In the case of H-12 huggerbands, two piece bands are required for diameters through 96" and three piece bands are required for diameters 102" through 120".
11. Two piece bands are required for pipes greater than 42" diameter.
12. The 2¼" × 2" × 0.109" thick galvanized die-formed angle connector may be used in lieu of the 2" × 2" × 3/16" angle connector for standard joints only on pipes through 72" diameter.
13. All profiles of Spiral Rib Pipe (¾" × ¾" ribs at 7½" pitch and ¾" × 1" ribs at 11½" pitch in both steel and aluminum and ¾" × 1" ribs at 8½" pitch in steel only) shall be manufactured with rerolled ends. Corrugation profile of the rerolled ends shall be 2⅔" × ½" annual corrugations with a minimum of two full corrugations at each end.

STATE OF CALIFORNIA
DEPARTMENT OF TRANSPORTATION

CORRUGATED METAL PIPE COUPLING DETAILS No. 5 STANDARD JOINT

D97E

2026 STANDARD PLAN D97E

7-1-26

Return to Table of Contents

Dist	COUNTY	ROUTE	POST MILES TOTAL PROJECT	SHEET No.	TOTAL SHEETS

REGISTERED CIVIL ENGINEER

September 18, 2026
PLANS APPROVAL DATE

REGISTERED PROFESSIONAL ENGINEER Sean T. Penders No. C63744 Exp. 9-30-26 CIVIL STATE OF CALIFORNIA

THE STATE OF CALIFORNIA OR ITS OFFICERS OR AGENTS SHALL NOT BE RESPONSIBLE FOR THE ACCURACY OR COMPLETENESS OF SCANNED COPIES OF THIS PLAN SHEET.

ANNULAR AND HELICAL PROFILE

COUPLING TYPE	PIPE CORRUGATION	PIPE SIZE	W OR A	PIPE WALL THICKNESS CSP	PIPE WALL THICKNESS CAP	BAND THICKNESS CSP	BAND THICKNESS CAP	BAR AND STRAP (CSP ONLY) STRAP THICKNESS	BOLTS Dia	BAR Dia	BAR YIELD STRENGTH	ANGLE DIMENSIONS CSP	ANGLE DIMENSIONS CAP	BOLTS (No. - Dia) CSP	BOLTS (No. - Dia) CAP	RIVETS ANGLE TO BAND CSP	RIVETS ANGLE TO BAND CAP	SPOT WELDS ANGLE TO BAND CSP
TWO PIECE INTEGRAL FLANGE	1½" x ¼"	6"-10"	7"	0.064"-0.079"	0.060"	0.064"	0.060"							2-⅜"	2-⅜"			
	2⅔" x ½"	12"-24"	12"		0.060"-0.105"		0.060"								3-½"			
UNIVERSAL	2⅔" x ½"	THROUGH 36"	12"	0.064"-0.138"	0.060"-0.135"	0.064"	0.060"	0.079"	½"	⅞"	32 ksi	2" x 2" x 3/16"	2" x 2" x 3/16"	3-½"	3-½"	3-⅜"	3-⅜"	5-½"
		42"-60"	16¼"	0.064"-0.168"	0.060"-0.164"	0.064"	0.060"	DOUBLE 0.079"	½"	⅞"	32 ksi	2" x 2" x ¼"	2" x 2" x ¼"	4-½"	4-½"	5-⅜"	5-⅜"	
ANNULAR	2⅔" x ½"	THROUGH 36"	12"	0.064"-0.138"	0.060"-0.135"	0.064"	0.060"					2" x 2" x 3/16"	2" x 2" x 3/16"	3-½"	3-½"	3-⅜"	3-⅜"	5-½"
		42"-60"	12"	0.064"-0.079"		0.064"						2" x 2" x 3/16"		3-½"		3-⅜"		5-½"
		42"-60"	12"	0.109"-0.168"	0.135"-0.164"	0.064"	0.075"					2" x 2" x ¼"	2" x 2" x ¼"	3-½"	3-½"	5-⅜"	5-⅜"	
		66"-72"	24"		0.164"		0.105"						2" x 2" x ¼"		5-½"		5-½"	
		66"-84"	24"	0.109"-0.168"		0.064"						2" x 2" x ¼"		5-½"		7-⅜"		
		42"-54"	12"		0.060"-0.105"		0.060"						2" x 2" x 3/16"		3-½"		3-⅜"	
	3" x 1"	48"-60"	14"	0.064"-0.079"		0.064"						2" x 2" x 3/16"		3-½"		3-⅜"		5-½"
		48"-60"	14"	0.109"		0.064"						2" x 2" x 3/16"		3-½"		5-⅜"		
		66"-120"	25"	0.064"-0.109"		0.064"						2" x 2" x 3/16"		5-½"		9-⅜"		
		42"-60"	14"		0.060"-0.105"		0.060"						2" x 2" x 3/16"		3-½"		5-⅜"	
		42"-60"	14"		0.135"		0.075"						2" x 2" x ¼"		3-½"		5-⅜"	
		66"-96"	25"		0.060"-0.135"		0.060"						2" x 2" x ¼"		5-½"		7-⅜"	
		96"-108"	25"		0.135"		0.075"						2" x 2" x ¼"		5-½"		7-⅜"	
HELICAL	2⅔" x ½"	THROUGH 36"	12"	0.064"-0.138"	0.060"-0.135"	0.064"	0.060"					2" x 2" x 3/16"	2" x 2" x 3/16"	3-½"	3-½"	3-⅜"	3-⅜"	5-½"
		42"-54"	12"		0.060"-0.105"		0.060"						2" x 2" x 3/16"		3-½"		3-⅜"	
		42"-60"	12"	0.064"-0.079"		0.064"						2" x 2" x 3/16"		3-½"		3-⅜"		5-½"
		42"-60"	12"	0.109"-0.168"	0.135"-0.164"	0.064"	0.075"					2" x 2" x ¼"	2" x 2" x ¼"	3-½"	3-½"	5-⅜"	5-⅜"	
		66'-84"	24"	0.109"-0.168"		0.064"						2" x 2" x ¼"		5-½"		7-⅜"		
		66"-72"	24"		0.164"		0.105"						2" x 2" x ¼"		5-½"		5-⅜"	
	3" x 1"	48"-60"	14"	0.064"-0.079"		0.064"						2" x 2" x 3/16"		3-½"		3-⅜"		5-½"
		48"-60"	14"	0.109"		0.064"						2" x 2" x 3/16"		3-½"		5-⅜"		
		66"-120"	25"	0.064"-0.109"		0.064"						2" x 2" x 3/16"		5-½"		9-⅜"		
		42"-60"	14"		0.060"-0.105"		0.060"						2" x 2" x 3/16"		3-½"		5-⅜"	
		42"-60"	14"		0.135"		0.075"						2" x 2" x ¼"		3-½"		5-⅜"	
		66"-96"	25"		0.060"-0.135"		0.060"						2" x 2" x ¼"		5-½"		7-⅜"	
		96"-108"	25"		0.135"		0.075"						2" x 2" x ¼"		5-½"		7-⅜"	
HUGGER	2⅔" x ½" REROLLED END	THROUGH 48"	10½"	0.109"		0.064"		0.079"	½"	⅞"	32 ksi							
		54"- 66"	10½"	0.109"		0.064"		DOUBLE 0.079"	½"	⅞"	32 ksi							
		THROUGH 54"	10½"	0.064"-0.079"		0.064"		0.079"	½"	⅞"	32 ksi							
		THROUGH 60"	10½"	0.138"		0.079"		DOUBLE 0.079"	½"	⅞"	32 ksi							
		66"-72"	10½"	0.138"		0.109"		DOUBLE 0.079"	½"	⅞"	32 ksi							
		THROUGH 72"	10½"	0.168"		0.109"		DOUBLE 0.109"	½"	⅞"	45 ksi							
	3" x 1" REROLLED END	48"-84"	10½"	0.109"		0.079"		DOUBLE 0.079"	½"	⅞"	32 ksi							
		48"-90"	10½"	0.064"-0.079"		0.064"		DOUBLE 0.079"	½"	⅞"	32 ksi							
		96"-102"	10½"	0.079"		0.079"		DOUBLE 0.079"	½"	⅞"	32 ksi							
		90"-120"	10½"	0.109"		0.109"		DOUBLE 0.109"	½"	⅞"	45 ksi							

SPIRAL RIB PROFILE

COUPLING TYPE	PIPE CORRUGATION	PIPE SIZE	W	PIPE WALL THICKNESS SSRP	PIPE WALL THICKNESS ASRP	BAND THICKNESS SSRP	BAND THICKNESS ASRP	BAR AND STRAP (SSRP ONLY) STRAP THICKNESS	BOLTS Dia	BAR Dia	BAR YIELD STRENGTH	ANGLE DIMENSIONS SSRP	ANGLE DIMENSIONS ASRP	BOLTS (No.- Dia) SSRP	BOLTS (No.- Dia) ASRP	RIVETS ANGLE TO BAND SSRP	RIVETS ANGLE TO BAND ASRP	SPOT WELDS ANGLE TO BAND SSRP
ANNULAR	2⅔" x ½" * REROLLED END	24"-36"	12"	0.064"-0.109"	0.060"-0.105"	0.064"	0.060"	0.079"	½"	⅞"	32 ksi	2" x 2" x 3/16"	2" x 2" x 3/16"	3-½"	3-½"	3-⅜"	3-⅜"	5-½"
		42"-60"	12"	0.064"-0.079"	0.075"-0.105"	0.064"	0.075"	0.079"	½"	⅞"	32 ksi	2" x 2" x 3/16"	2" x 2" x 3/16"	3-½"	3-½"	3-⅜"	3-⅜"	5-½"
		42"-60"	12"	0.109"		0.064"		0.079"	½"	⅞"	32 ksi	2" x 2" x ¼"		3-½"		5-⅜"		
		66"-84"	24"	0.109"		0.064"		0.079"	½"	⅞"	32 ksi	2" x 2" x ¼"		5-½"		7-⅜"		
HUGGER	2⅔" x ½" * REROLLED END	24"-54"	10½"	0.064"-0.079"		0.064"		0.079"	½"	⅞"	32 ksi							
		24"-48"	10½"	0.109"		0.064"		0.079"	½"	⅞"	32 ksi							
		54"-66"	10½"	0.109"		0.064"		DOUBLE 0.079"	½"	⅞"	32 ksi							

* See Note 12.

NOTES:

1. For helically corrugated coupling bands, the connection angles may be oriented parallel to the pipe axis, provided connecting holes are slotted lengthwise sufficiently to allow adjustment for the helix angle.
2. Tension strap may be connected to band with either spot welds or fillet welds that develop minimum required strength of strap.
3. Use 1¼" gage line dimension on attached angle leg for rivets and spot welds.
4. Band thickness shall not be less than:
   a. 3 standard thicknesses lighter than the thickness of the pipe for Corrugated Steel Pipe.
   b. 2 standard thicknesses lighter than the thickness of the pipe and in no case lighter than 0.060" for Corrugated Aluminum Pipe.
5. Dimensions, thicknesses and strengths shown are minimum.
6. For pipe arches use same width band as for round pipe of equal periphery.
7. Fillet welds of equivalent strength may be substituted for spot welds or rivets.
8. Spot welds shall develop minimum required strength of strap.
9. Pipe with rerolled ends having at least two 2⅔" x ½" annular corrugations at each end with or without an upturned flange may be connected with any of the annular coupling bands shown for pipe of the same diameter and wall thickness and having 2⅔" x ½" corrugations.
10. In the case of H-12 huggerbands, two piece bands are required for diameters through 96" and three piece bands are required for diameters 102" through 120".
11. Two piece bands are required for pipes greater than 42" diameter.
12. All profiles of Spiral Rib Pipe (¾" x ¾" ribs at 7½" pitch and ¾" x 1" ribs at 11½" pitch in both steel and aluminum and ¾" x 1" ribs at 8½" pitch in steel only) shall be manufactured with rerolled ends. Corrugation profile of the rerolled ends shall be 2⅔" x ½" annual corrugations with a minimum of two full corrugations at each end.

STATE OF CALIFORNIA
DEPARTMENT OF TRANSPORTATION

CORRUGATED METAL PIPE COUPLING DETAILS No. 6 POSITIVE JOINT

D97F

7-1-26

2026 STANDARD PLAN D97F

Return to Table of Contents

Dist	COUNTY	ROUTE	POST MILES TOTAL PROJECT	SHEET No.	TOTAL SHEETS

REGISTERED CIVIL ENGINEER

September 18, 2026

PLANS APPROVAL DATE

REGISTERED PROFESSIONAL ENGINEER Sean T. Penders No. C63744 Exp. 9-30-26 CIVIL STATE OF CALIFORNIA

THE STATE OF CALIFORNIA OR ITS OFFICERS OR AGENTS SHALL NOT BE RESPONSIBLE FOR THE ACCURACY OR COMPLETENESS OF SCANNED COPIES OF THIS PLAN SHEET.

ANNULAR AND HELICAL PROFILE

COUPLING TYPE	PIPE CORRUGATION	PIPE SIZE	W OR A	PIPE WALL THICKNESS		BAND THICKNESS		BAR AND STRAP (CSP ONLY)				ANGLE						
												DIMENSIONS		BOLTS (No.- Dia)		RIVETS ANGLE TO BAND		SPOT WELDS ANGLE TO BAND
				CSP	CAP	CSP	CAP	STRAP THICKNESS	BOLTS Dia	BAR Dia	BAR YIELD STRENGTH	CSP	CAP	CSP	CAP	CSP	CAP	CSP
TWO PIECE INTEGRAL FLANGE	1½′ × ¼″	6″	7″	0.064″-0.168″		0.052″								3-⅜″				
	1½′ × ¼″	8″-10″	7″	0.064″-0.168″	0.060″-0.164″	0.064″	0.060″							3-⅜″	3-⅜″			
ANNULAR	2⅔″ × ½″	THROUGH 24″	12″	0.064″-0.168″	0.060″-0.164″	0.064″	0.060″					2″ × 2″ × 3/16″	2″ × 2″ × 3/16″	3-½″	3-½″	3-⅜″	3-⅜″	3-½″
HUGGER	2⅔″ × ½″ REROLLED END	THROUGH 24″	10½″	0.064″-0.168″		0.064″		0.079″	½″	⅞″	32 ksi							

SPIRAL RIB PROFILE

COUPLING TYPE	PIPE CORRUGATION	PIPE SIZE	W	PIPE WALL THICKNESS		BAND THICKNESS		BAR AND STRAP (SSRP ONLY)				ANGLE						
												DIMENSIONS		BOLTS (No.- Dia)		RIVETS ANGLE TO BAND		SPOT WELDS ANGLE TO BAND
				SSRP	ASRP	SSRP	ASRP	STRAP THICKNESS	BOLTS Dia	BAR Dia	BAR YIELD STRENGTH	SSRP	ASRP	SSRP	ASRP	SSRP	ASRP	SSRP
ANNULAR	2⅔″ × ½″ * REROLLED END	24″	12″	0.064″-0.168″	0.060″-0.164″	0.064″	0.060″					2″ × 2″ × 3/16″	2″ × 2″ × 3/16″	3-½″	3-½″	3-⅜″	3-⅜″	3-½″
HUGGER	2⅔″ × ½″ * REROLLED END	24″	10½″	0.064″-0.168″		0.064″		0.079″	½″	⅞″	32 ksi							

* See Note 11.

NOTES:

1. For helically corrugated coupling bands, the connection angles may be oriented parallel to the pipe axis, provided connecting holes are slotted lengthwise sufficiently to allow adjustment for the helix angle.
2. Tension strap may be connected to band with either spot welds or fillet welds that develop minimum required strength of strap.
3. Use 1¼″ gage line dimension on attached angle leg for rivets and spot welds.
4. Band thickness shall not be less than:
   a. 3 standard thicknesses lighter than the thickness of the pipe for Corrugated Steel Pipe.
   b. 2 standard thicknesses lighter than the thickness of the pipe and in no case lighter than 0.060″ for Corrugated Aluminum Pipe.
5. Dimensions, thicknesses and strengths shown are minimum.
6. For pipe arches use same width band as for round pipe of equal periphery.
7. Fillet welds of equivalent strength may be substituted for spot welds or rivets.
8. Spot welds shall develop minimum required strength of strap.
9. Pipe with rerolled ends having at least two 2⅔″ × ½″ annular corrugations at each end with or without an upturned flange may be connected with any of the annular coupling bands shown for pipe of the same diameter and wall thickness and having 2⅔″ × ½″ corrugations.
10. For downdrain applications, two piece integral flange couplers shall have factory applied sleeve type rubber gaskets with a minimum length of 7″ measured along the length of the pipe.
11. All profiles of Spiral Rib Pipe (¾″ × ¾″ ribs at 7½″ pitch and ¾″ × 1″ ribs at 11½″ pitch in both steel and aluminum and ¾″ × 1″ ribs at 8½″ pitch in steel only) shall be manufactured with rerolled ends. Corrugation profile of the rerolled ends shall be 2⅔″ × ½″ annual corrugations with a minimum of two full corrugations at each end.

STATE OF CALIFORNIA
DEPARTMENT OF TRANSPORTATION

CORRUGATED METAL PIPE COUPLING DETAILS No. 7 DOWNDRAIN

D97G

2026 STANDARD PLAN D97G

7-1-26

Return to Table of Contents

Dist	COUNTY	ROUTE	POST MILES TOTAL PROJECT	SHEET No.	TOTAL SHEETS

REGISTERED CIVIL ENGINEER

September 18, 2026

PLANS APPROVAL DATE

REGISTERED PROFESSIONAL ENGINEER Sean T. Penders No. C63744 Exp. 9-30-26 CIVIL STATE OF CALIFORNIA

THE STATE OF CALIFORNIA OR ITS OFFICERS OR AGENTS SHALL NOT BE RESPONSIBLE FOR THE ACCURACY OR COMPLETENESS OF SCANNED COPIES OF THIS PLAN SHEET.

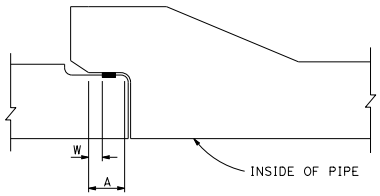

CONCRETE JOINT-FLARED BELL DESIGN

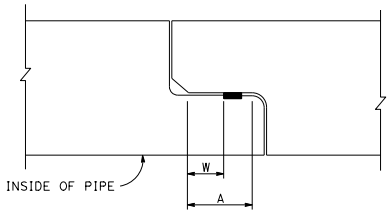

CONCRETE JOINT-FLUSH BELL DESIGN

LEGEND

- CEMENT MORTAR
- RUBBER GASKET
- STEEL

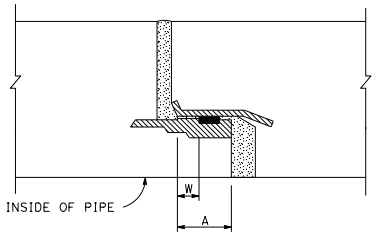

STEEL JOINT-FLUSH BELL DESIGN

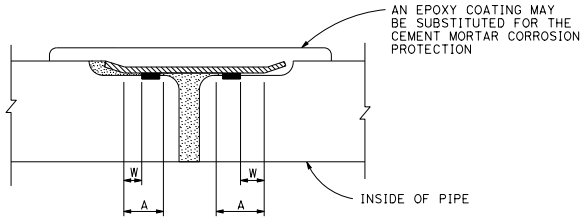

CONCRETE JOINT-DOUBLE GASKET DESIGN

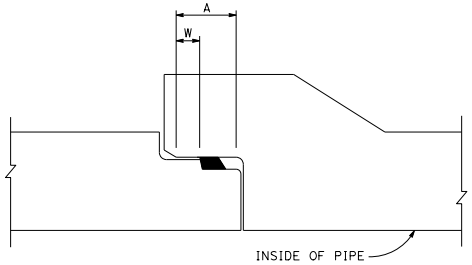

CONCRETE JOINT-SINGLE OR DOUBLE OFFSET DESIGN

Flared or Flush Bell

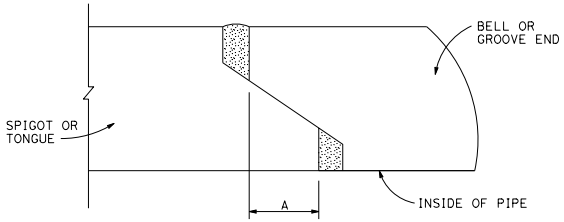

SELF-CENTERING TONGUE & GROOVE

See Note 4

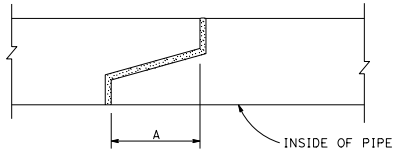

TONGUE & GROOVE DESIGN

NOTES:

1. For pipe sections installed on straight alignment, the pipe sections shall be joined to provide maximum joint overlap at all points on the joint periphery, but in no case less than the values shown in Table A for "W" if the installation is required to be watertight or "A" for all other installations.

2. For pipe sections installed on curved alignment, the pipe sections shall be joined to provide maximum joint overlap on one side of the joint and not less than 1/4" overlap on the other. The 1/4" overlap shall be the "W" dimension for installations required to be watertight, or the "A" dimension for all other installations.

3. Watertight joint requirement shall typically be met with the use of rubber gaskets as shown. Pipe installed with rubber gaskets shall have a minimum overlap meeting or exceeding the indicated "W" dimension shown in Table A or indicated in Note 2. Joints shown with rubber gaskets may be installed without gaskets in non-watertight applications, in which case the joint shall be sealed with sealing materials and the minimum joint overlap shall meet or exceed the "A" dimension shown in Table A or indicated in Note 2.

4. For Self-Centering Tongue and Groove Joints, the mortar shall be applied after the pipe ends are pushed together. The mortar shall be applied to the joint gap on the inside of the pipe for pipe diameters of 24" or more, or to the gap on the outside of the pipe for pipe smaller than 24" in diameter.

5. When watertight joints are required (See Note 3) and cement mortar joints are not allowed, the taper on surfaces within the "W" dimension at full joint closure and the opposing sealing surfaces of the bells and spigots on which the rubber gaskets may bear during closure of the joint and at any degree of partial closure shall form an angle of not more than 2 degrees with the longitudinal axis of the pipe.

TABLE A

PIPE DIAMETER LIMITS	MINIMUM JOINT OVERLAP			
	STANDARD "A"	POSITIVE "A"	STANDARD "W"	POSITIVE "W"
6" THROUGH 12"	1/4"	1/2"	1/4"	3/8"
15" THROUGH 33"	1/2"	3/4"	1/4"	1/2"
GREATER THAN 33"	3/4"	1"	3/8"	5/8"

STATE OF CALIFORNIA
DEPARTMENT OF TRANSPORTATION

REINFORCED CONCRETE PIPE OR NON-REINFORCED CONCRETE PIPE STANDARD AND POSITIVE JOINTS

NO SCALE

D97H

7-1-26

2026 STANDARD PLAN D97H

Return to Table of Contents

Dist	COUNTY	ROUTE	POST MILES TOTAL PROJECT	SHEET No.	TOTAL SHEETS

REGISTERED CIVIL ENGINEER

September 18, 2026

PLANS APPROVAL DATE

REGISTERED PROFESSIONAL ENGINEER Sean T. Penders No. C63744 Exp. 9-30-26 CIVIL STATE OF CALIFORNIA

THE STATE OF CALIFORNIA OR ITS OFFICERS OR AGENTS SHALL NOT BE RESPONSIBLE FOR THE ACCURACY OR COMPLETENESS OF SCANNED COPIES OF THIS PLAN SHEET.

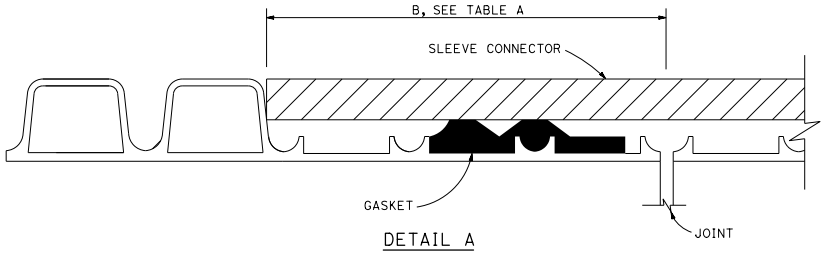

DETAIL A

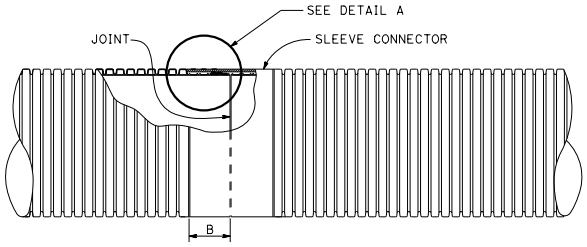

PLAN VIEW
LINER INSERT
See Note 4

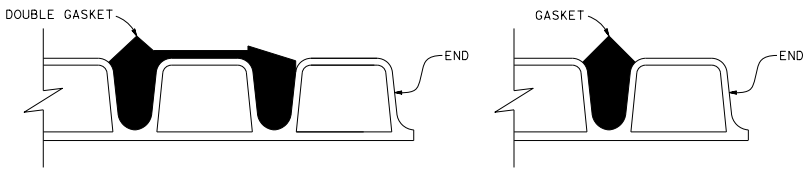

DOUBLE GASKET

SINGLE GASKET

DETAIL B

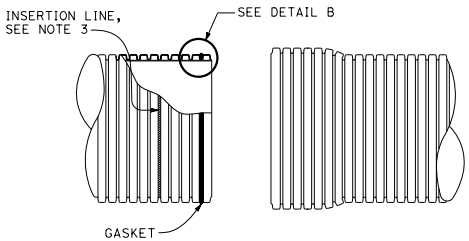

SPIGOT

BELL

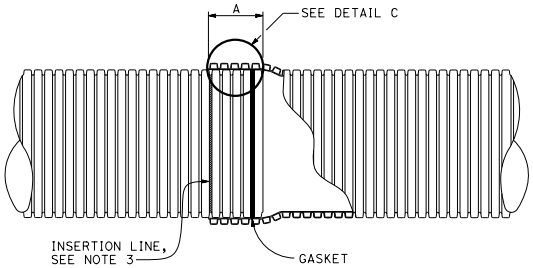

BELL AND SPIGOT JOINT

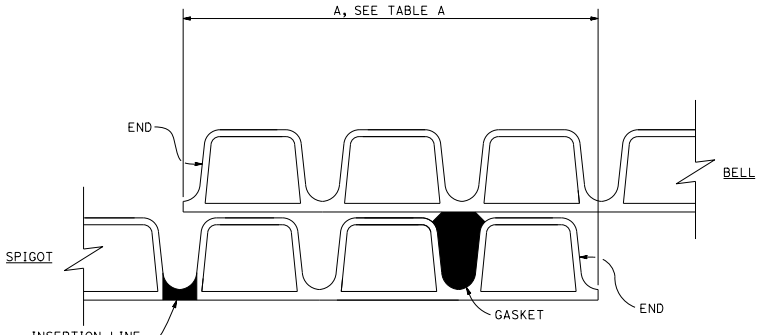

DETAIL C
Single gasket shown

NOTES:

1. For pipe sections installed on straight alignment, the pipe sections shall be joined to achieve maxium joint overlap at all points on the periphery as indicated in Table A where the plans call for positive or watertight joints. Maxium joint overlap is recommended where the plans call for standard joints, but in no case shall the joint overlap be less than 3½".
2. For pipe sections installed on curved alignment, the maxium angle of deflection from straight alignment at any joint shall not exceed two degrees. Where the plans call for watertightness, field testing for compliance is required. Where plans call for positive joints, the pipe sections shall be joined to achieve Table A Dimensions on one side of the joint. Joints classified as standard shall have no less than 3½" joint overlap at any point on the periphery.
3. Factory applied insertion line limit shall be placed on spigot.
4. Liner insert to be used inside of existing pipe.

TABLE A

JOINT OVERLAP DIMENSIONS		
PIPE Dia (NOMINAL)	A	B
12"	5¾"	4¼"
15"	6¾"	5⅝"
18"	6¾"	5⅝"
21"	8½"	5⅝"
24"	8½"	6⅛"
30"	8½"	7⅛"
36"	8½"	8⅛"

STATE OF CALIFORNIA
DEPARTMENT OF TRANSPORTATION

CORRUGATED POLYVINYL CHLORIDE PIPE WITH SMOOTH INTERIOR STANDARD AND POSITIVE JOINTS

NO SCALE

D97I

2026 STANDARD PLAN D97I

7-1-26

Return to Table of Contents

Dist	COUNTY	ROUTE	POST MILES TOTAL PROJECT	SHEET No.	TOTAL SHEETS

REGISTERED CIVIL ENGINEER

September 18, 2026

PLANS APPROVAL DATE

REGISTERED PROFESSIONAL ENGINEER Sean T. Penders No. C63744 Exp. 9-30-26 CIVIL STATE OF CALIFORNIA

THE STATE OF CALIFORNIA OR ITS OFFICERS OR AGENTS SHALL NOT BE RESPONSIBLE FOR THE ACCURACY OR COMPLETENESS OF SCANNED COPIES OF THIS PLAN SHEET.

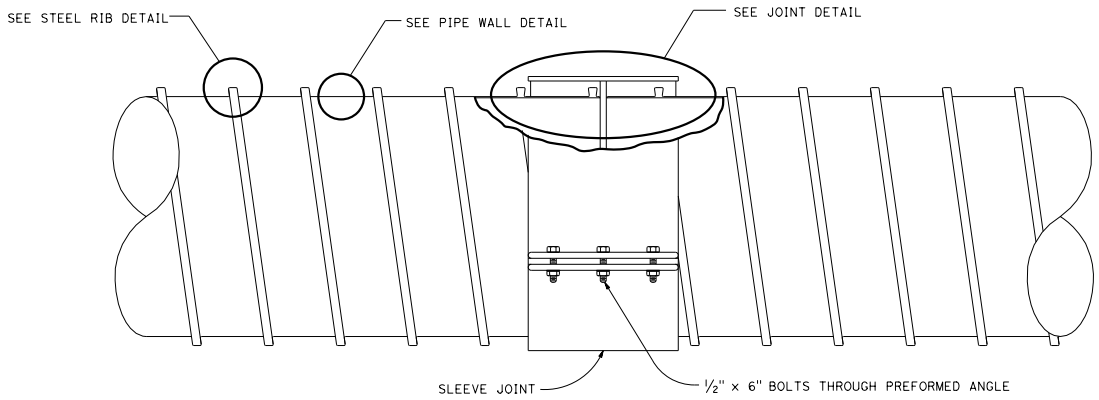

COMPOSITE STEEL SPIRAL RIB PIPE

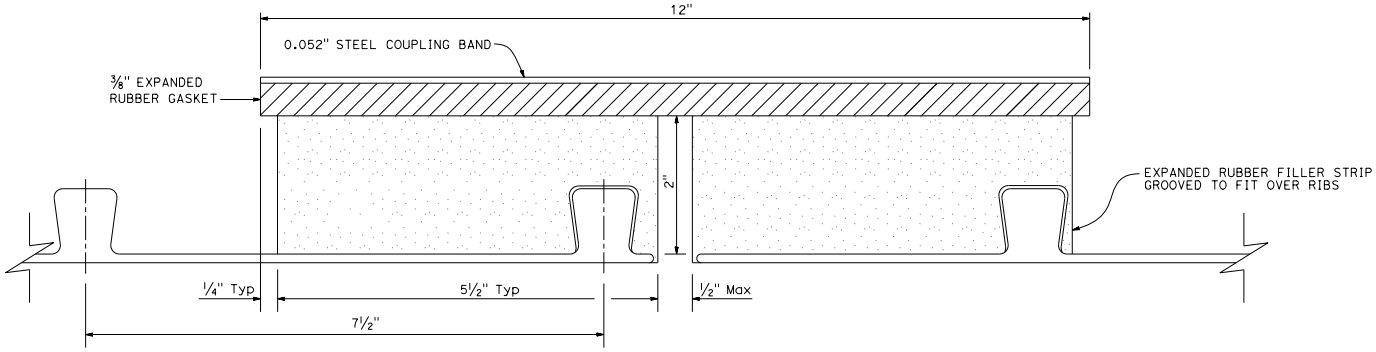

JOINT DETAIL

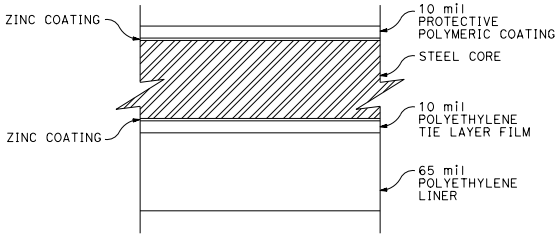

PIPE WALL DETAIL

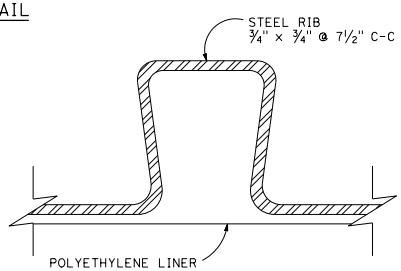

STEEL RIB DETAIL

NOTES:

1. See Standard Plan A62F for backfill details.
2. See Standard Plan D97C for Universal Coupling details.
3. Strap joint connection shall consist of 2 separate bolted preformed connectors joined to form one strap when pipe inside diameter is greater than or equal to 60".

STATE OF CALIFORNIA
DEPARTMENT OF TRANSPORTATION

COMPOSITE STEEL SPIRAL RIB PIPE WITH SMOOTH INTERIOR STANDARD JOINT

NO SCALE

D97J

2026 STANDARD PLAN D97J

7-1-26

Return to Table of Contents

Dist	COUNTY	ROUTE	POST MILES TOTAL PROJECT	SHEET No.	TOTAL SHEETS

REGISTERED CIVIL ENGINEER

September 18, 2026

PLANS APPROVAL DATE

REGISTERED PROFESSIONAL ENGINEER Sean T. Penders No. C63744 Exp. 9-30-26 CIVIL STATE OF CALIFORNIA

THE STATE OF CALIFORNIA OR ITS OFFICERS OR AGENTS SHALL NOT BE RESPONSIBLE FOR THE ACCURACY OR COMPLETENESS OF SCANNED COPIES OF THIS PLAN SHEET.

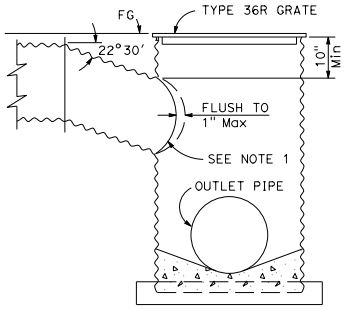

TYPE GMP INLET

See Standard Plans D75A, D75C and D77B for additional inlet details.

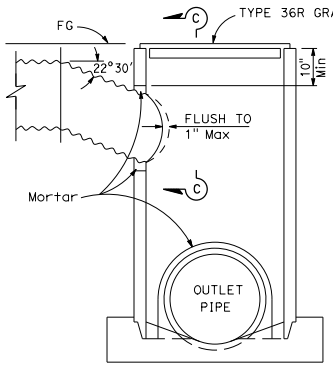

TYPE GCP INLET

See Standard Plans D75B, D75C and D77B for additional inlet details.

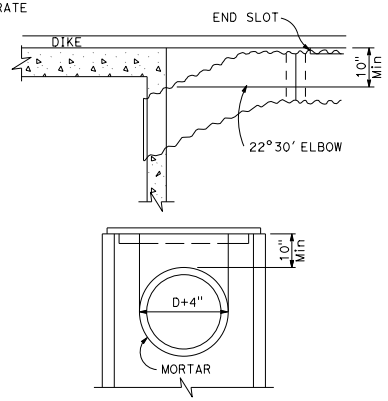

SECTION C-C

SLOTTED DRAIN CONNECTIONS TO STANDARD INLET STRUCTURES

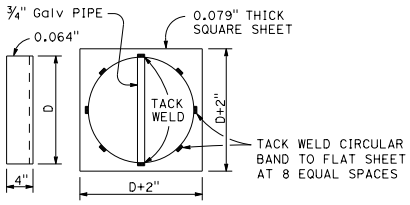

METAL CAP DETAIL

See Note 2

NOTES:

1. Either field joint sealed with a pliable mixture of sand, portland cement and emulsified asphalt (mixture of 1 part portland cement, 3-5 parts sand and 1½ parts SSI emulsified asphalt) or continuous weld.
2. "D" equals nominal pipe diameter.

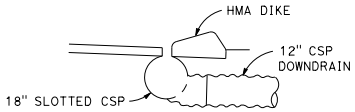

ELEVATION

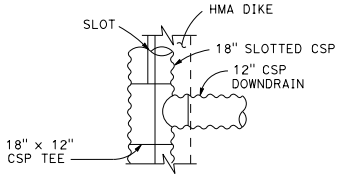

PLAN

SHOULDER INSTALLATION 18" SLOTTED CSP TO 12" DOWNDRAIN

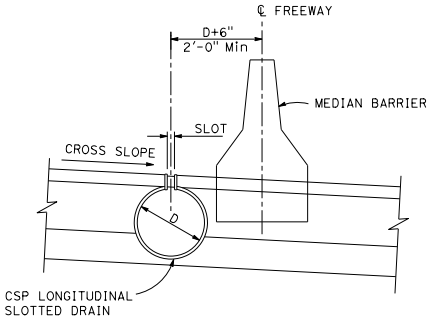

TYPICAL CROSS SECTION

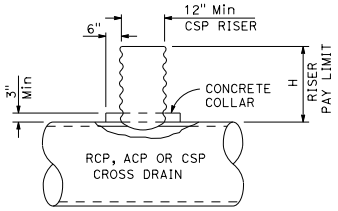

RISER CONNECTION DETAIL

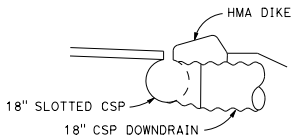

ELEVATION

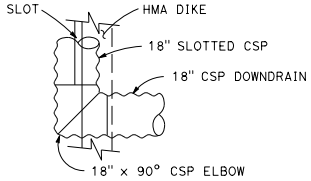

PLAN

SHOULDER INSTALLATION 18" SLOTTED CSP TO 18" CSP DOWNDRAIN

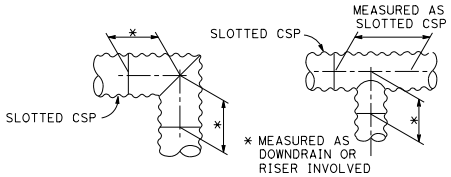

MEASUREMENT OF CORRUGATED STEEL PIPE ELBOWS AND TEES USED WITH SLOTTED DRAINS

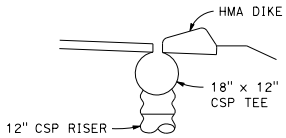

ELEVATION-END VIEW

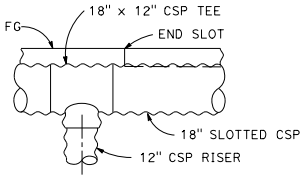

ELEVATION-SIDE VIEW

SHOULDER INSTALLATION 18" SLOTTED CSP TO 12" CSP RISER

STATE OF CALIFORNIA
DEPARTMENT OF TRANSPORTATION

SLOTTED CORRUGATED STEEL PIPE DRAIN DETAILS

NO SCALE

D98A

7-1-26

2026 STANDARD PLAN D98A

Return to Table of Contents

Dist	COUNTY	ROUTE	POST MILES TOTAL PROJECT	SHEET No.	TOTAL SHEETS

REGISTERED CIVIL ENGINEER

September 18, 2026
PLANS APPROVAL DATE

REGISTERED PROFESSIONAL ENGINEER Sean T. Penders No. C63744 Exp. 9-30-26 CIVIL STATE OF CALIFORNIA

THE STATE OF CALIFORNIA OR ITS OFFICERS OR AGENTS SHALL NOT BE RESPONSIBLE FOR THE ACCURACY OR COMPLETENESS OF SCANNED COPIES OF THIS PLAN SHEET.

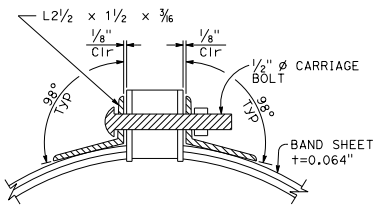

SECTION B-B

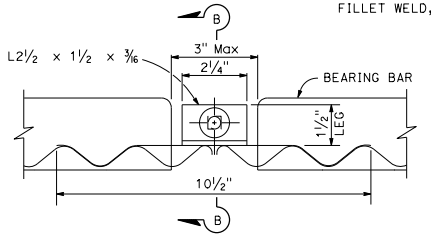

ELEVATION

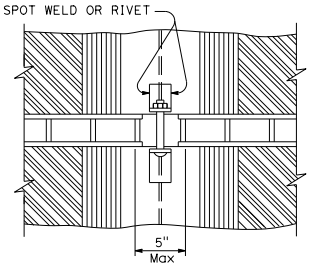

PART PLAN

MODIFIED HUGGER BAND

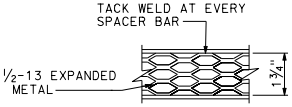

HEEL GUARD

See Note 8

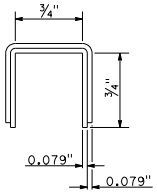

PARTIAL SECTION A-A

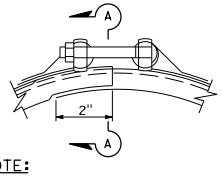

NOTE:
As an alternate to swagged end an oversized bridge clip may be used.

SIDE VIEW

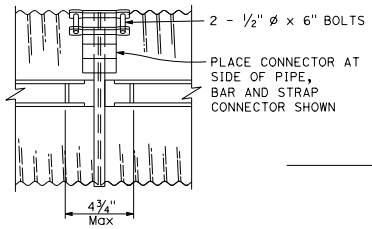

PART PLAN

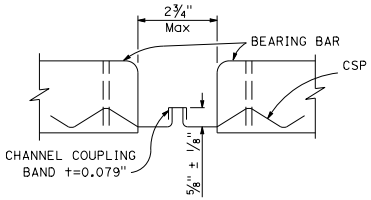

ELEVATION

BAR & STRAP CONNECTOR

See Standard Plan D97A

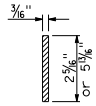

SECTION E-E

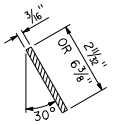

SECTION F-F

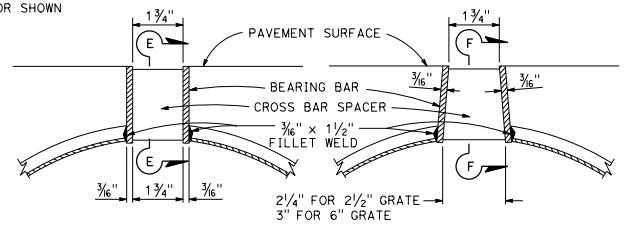

RECTANGULAR SPACER TAPERED SPACER

GRATE SLOT-SECTION

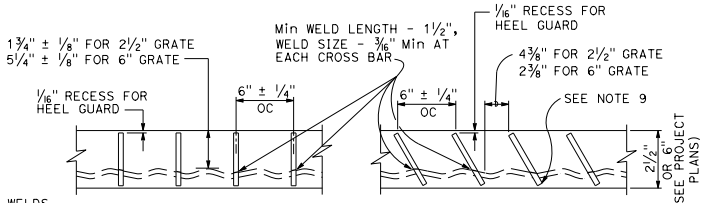

RECTANGULAR SPACER TAPERED SPACER

GRATE SLOT-LONGITUDINAL ELEVATION VIEW

See Note 10

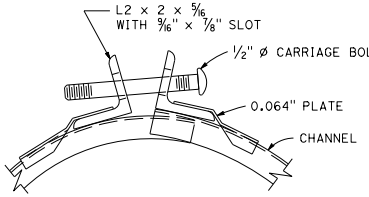

SIDE VIEW

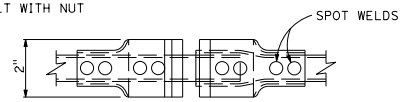

PART PLAN

ANGLE CONNECTOR

CHANNEL COUPLING BAND

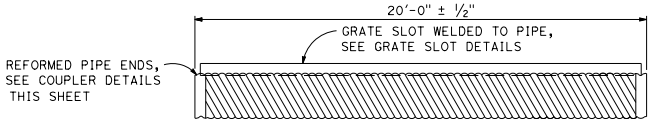

SLOTTED CORRUGATED STEEL PIPE

NOTES:

1. Drain pipe seams may be continuous helical lock seam or helical weld seam.
2. Drain sections shall be assembled with either of the coupling bands shown.
3. The cross bar spacer shall be welded to the bearing bars in such a manner as to develop a minimum tensile strength of 12,000 LBS normal to the longitudinal axis of the bearing bars.
4. The maximum variance from a straight line between the extreme top corners of the bearing bars shall be ½" in 20'-0".
5. Spot welds shall develop minimum required strength of strap.
6. Dimensions shown are minimums.
7. Minimum pipe wall thickness is 0.064".
8. Use heel guard when specified.
9. Bottom edge of cross bar spacer offset in direction of flow.
10. Unless otherwise shown on the plans or specified in the special provisions, cross bar spacers shall be either rectangular or tapered at the contractor's option.

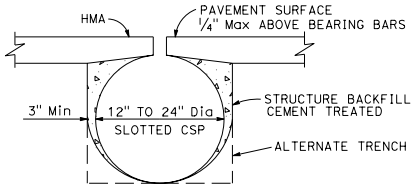

BACKFILL

STATE OF CALIFORNIA
DEPARTMENT OF TRANSPORTATION

SLOTTED CORRUGATED STEEL PIPE DRAIN DETAILS

NO SCALE

D98B

2026 STANDARD PLAN D98B

7-1-26

Return to Table of Contents

Dist	COUNTY	ROUTE	POST MILES TOTAL PROJECT	SHEET No.	TOTAL SHEETS

REGISTERED CIVIL ENGINEER

September 18, 2026
PLANS APPROVAL DATE

REGISTERED PROFESSIONAL ENGINEER Sean T. Penders No. C63744 Exp. 9-30-26 CIVIL STATE OF CALIFORNIA

THE STATE OF CALIFORNIA OR ITS OFFICERS OR AGENTS SHALL NOT BE RESPONSIBLE FOR THE ACCURACY OR COMPLETENESS OF SCANNED COPIES OF THIS PLAN SHEET.

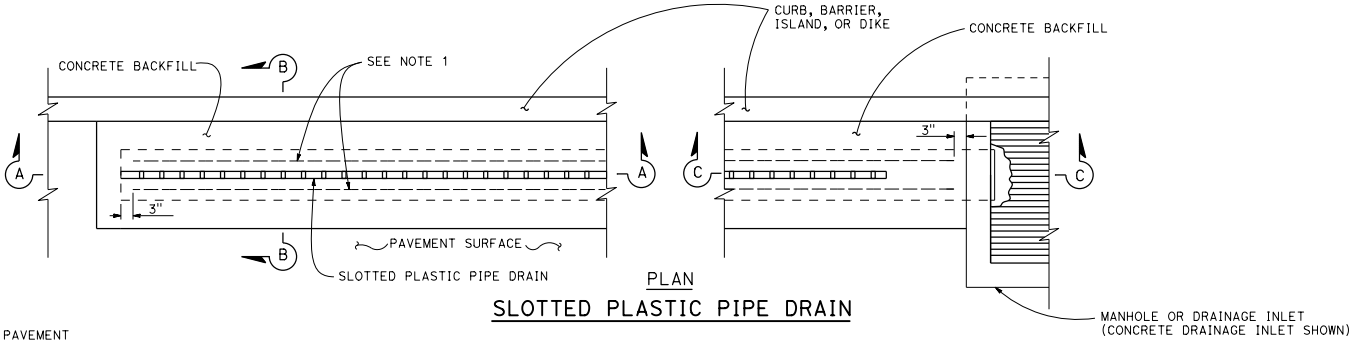

PLAN

SLOTTED PLASTIC PIPE DRAIN

NOTES:

1. Lateral support, #4 bar, to be placed on both sides of slotted plastic pipe throat.
2. Slot plastic pipe cross section is a generic shape. Shape shall conform to allowable manufacturer's cross sections.

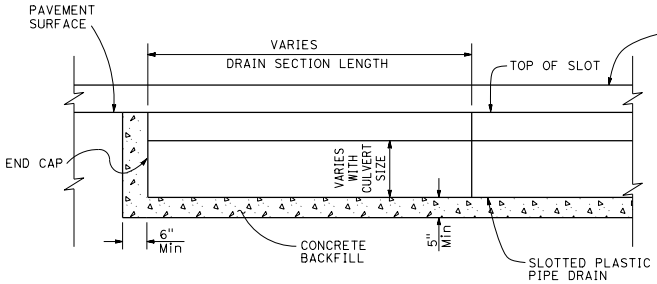

SECTION A-A

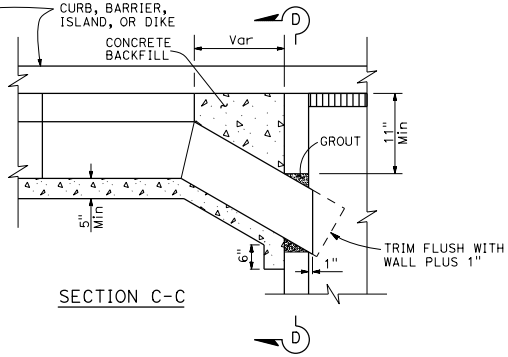

SECTION C-C

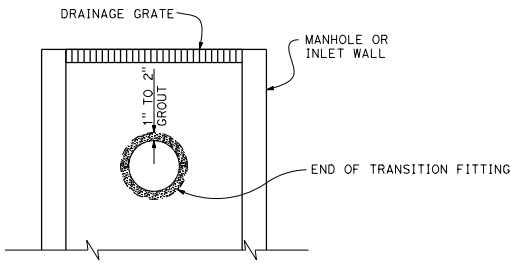

SECTION D-D

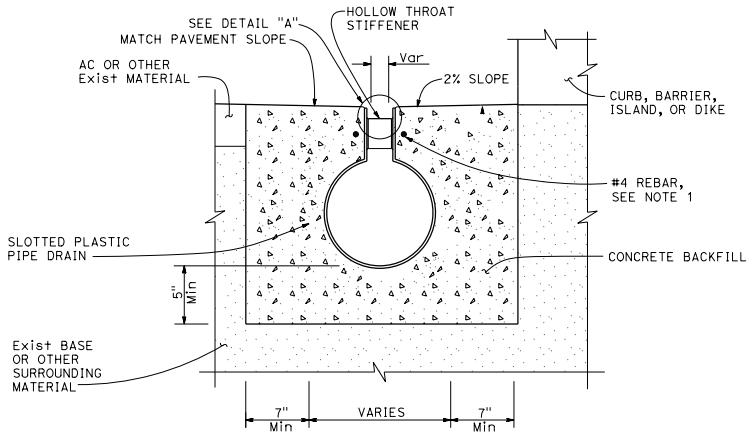

SECTION B-B

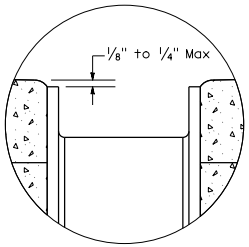

DETAIL A

STATE OF CALIFORNIA
DEPARTMENT OF TRANSPORTATION

SLOTTED PLASTIC PIPE DRAIN DETAILS

NO SCALE

D98D

7-1-26

2026 STANDARD PLAN D98D

Return to Table of Contents

Dist	COUNTY	ROUTE	POST MILES TOTAL PROJECT	SHEET No.	TOTAL SHEETS

REGISTERED CIVIL ENGINEER

September 18, 2026
PLANS APPROVAL DATE

REGISTERED PROFESSIONAL ENGINEER Sean T. Penders No. C63744 Exp. 9-30-26 CIVIL STATE OF CALIFORNIA

THE STATE OF CALIFORNIA OR ITS OFFICERS OR AGENTS SHALL NOT BE RESPONSIBLE FOR THE ACCURACY OR COMPLETENESS OF SCANNED COPIES OF THIS PLAN SHEET.

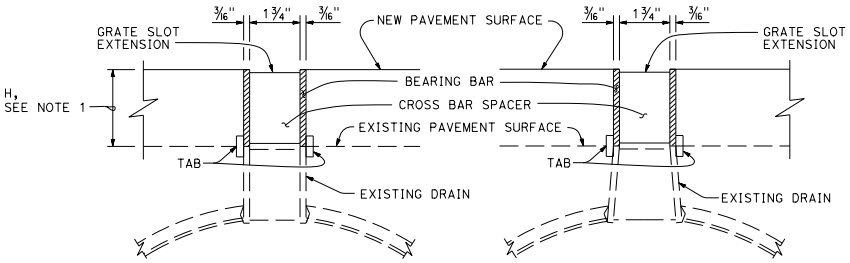

RECTANGULAR SPACER — SECTION — TAPERED SPACER

SLOTTED CORRUGATED STEEL PIPE

Grate slot extension

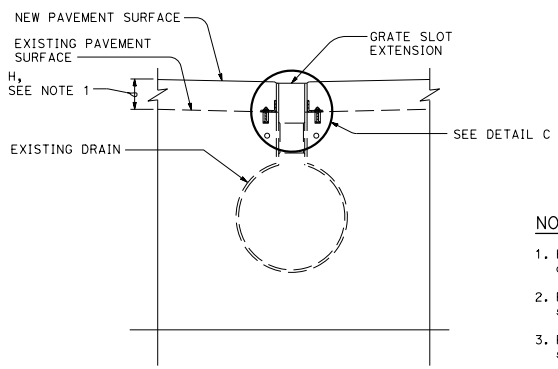

SECTION

SLOTTED PLASTIC PIPE

Grate slot extension

NOTES:

1. H must be a minimum of 2½", or otherwise shown on the plans.
2. For Slotted Plastic Pipe Drain Details, see Standard Plan D98D.
3. For Slotted Corrugated Steel Pipe Drain Details, see Standard Plans D98A and D98B.
4. Use heel guard when shown. See Standard Plan D98B for heel guard details.
5. Minimum grate slot extension length is 80".
6. The top corners of the grate slot extension's bearing bars must not vary from a straight line more than ½" in 20'-0".
7. Cross bar spacers must be welded to the grate slot extension's bearing bars to achieve a minimum tensile strength of 12,000 LB normal to the longitudinal axis of the bearing bars.

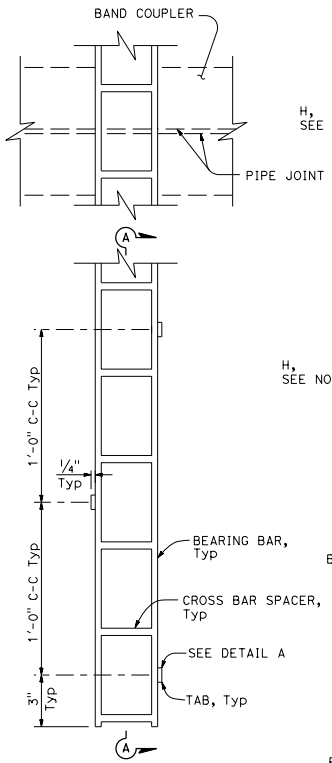

PLAN

SLOTTED CORRUGATED STEEL PIPE

Grate slot extension

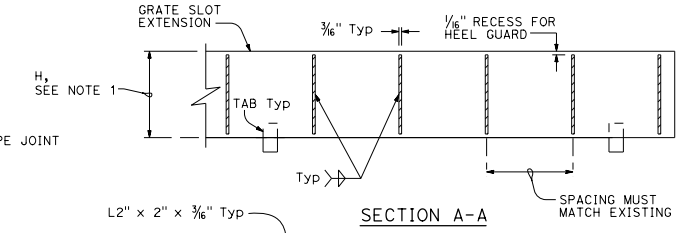

SECTION A-A

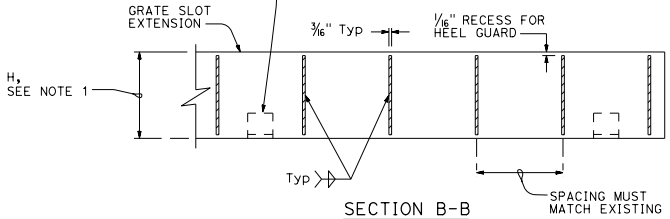

SECTION B-B

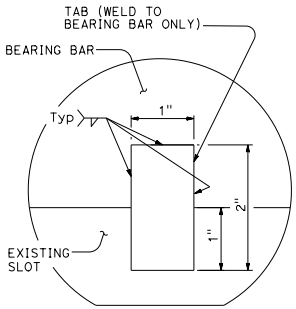

DETAIL A

Tab alignment

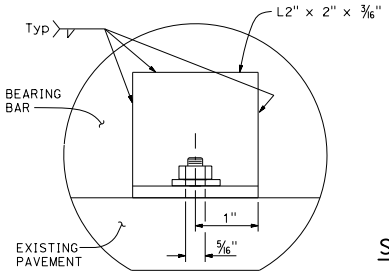

DETAIL B

Angle alignment

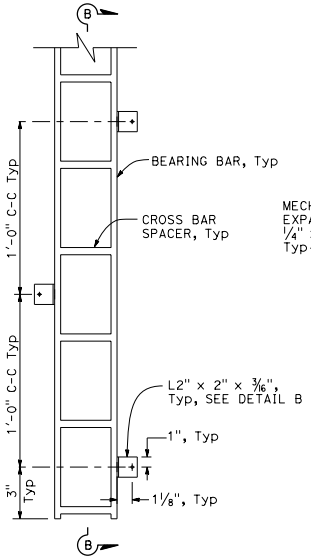

PLAN

SLOTTED PLASTIC PIPE

Grate slot extension

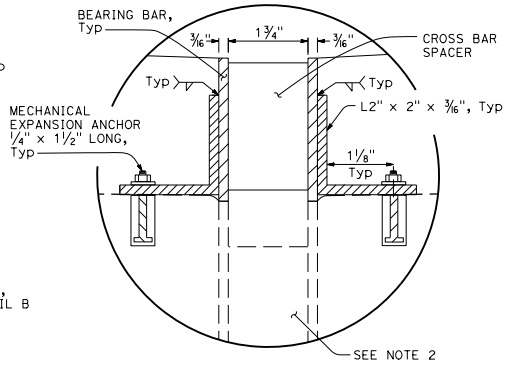

DETAIL C

STATE OF CALIFORNIA
DEPARTMENT OF TRANSPORTATION

SLOTTED PIPE GRATE EXTENSION DETAILS

NO SCALE

D98F

7-1-26

Return to Table of Contents

Dist	COUNTY	ROUTE	POST MILES TOTAL PROJECT	SHEET No.	TOTAL SHEETS

REGISTERED CIVIL ENGINEER

September 18, 2026
PLANS APPROVAL DATE

REGISTERED PROFESSIONAL ENGINEER Sean T. Penders No. C63744 Exp. 9-30-26 CIVIL STATE OF CALIFORNIA

THE STATE OF CALIFORNIA OR ITS OFFICERS OR AGENTS SHALL NOT BE RESPONSIBLE FOR THE ACCURACY OR COMPLETENESS OF SCANNED COPIES OF THIS PLAN SHEET.

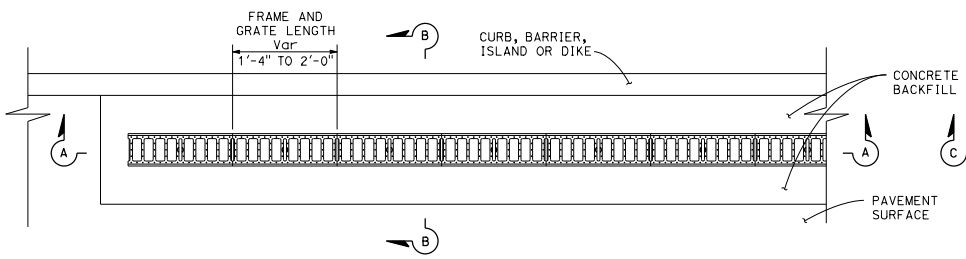

PLAN

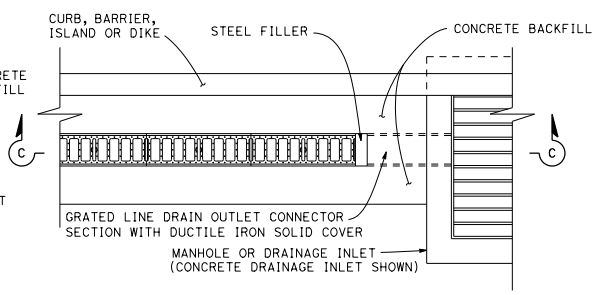

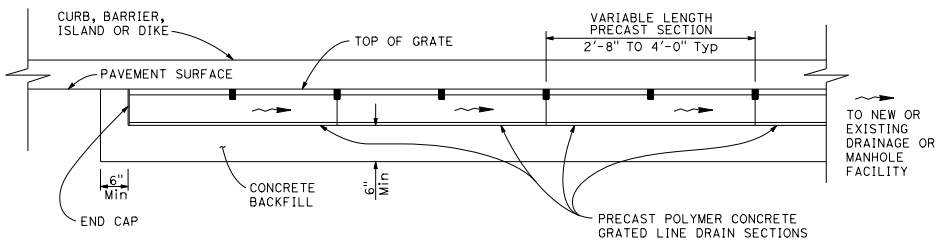

SECTION A-A

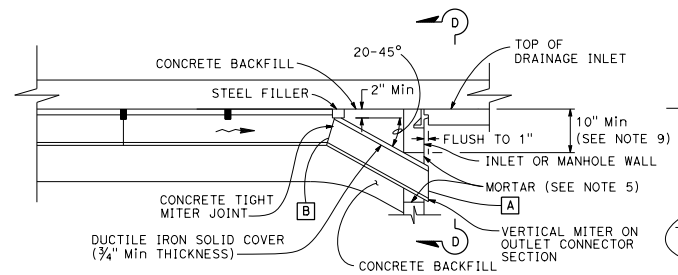

SECTION C-C

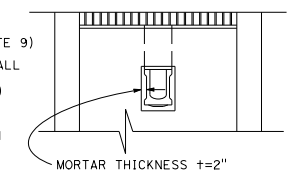

SECTION D-D

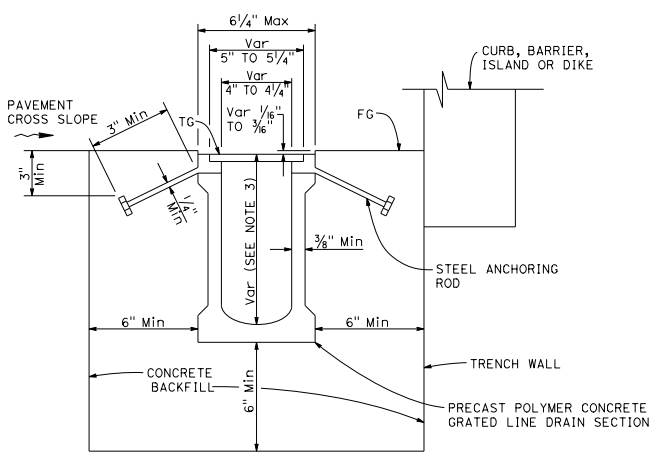

SECTION B-B
(Precast grated line drain with non-integral frame)

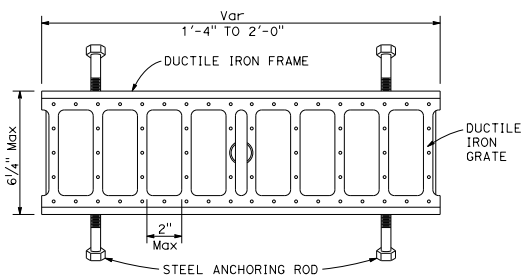

FRAME AND GRATE DETAIL
See Notes 6, 7 and 8

NOTES:

1. See Quantity Sheets for discharge capacity requirements.
2. Discharge capacity (cfs) at point A must be equivalent to maximum channel discharge capacity of grated line drain at point B.
3. Precast polymer concrete drain sections are available in non-sloped uniform depth sections 4 7/16" to 12" or in 0.6 percent pre-sloped sections with graduated depths from 4 7/16" to 12". See Project Plans for trench sections to be installed.
4. Nominal dimensions shown. Allowable tolerance ± 2%.
5. For GMP inlet connection, seal field joint with a pliable mixture of sand, portland cement and emulsified asphalt (mixture of 1 part portland cement, 3-5 parts sand and 1½ part SSI emulsified asphalt).
6. Within designated pedestrian paths of travel, the maximum grate opening in the direction of pedestrian traffic must not exceed ½".
7. Grate patterns may vary from detail shown. See Special Provisions.
8. 3/16" maximum gap between adjacent gratings.
9. Contractor to field verify minimum depth to avoid conflict with inlet top.

STATE OF CALIFORNIA
DEPARTMENT OF TRANSPORTATION

GRATED LINE DRAIN DETAILS No. 1 POLYMER CONCRETE, 4" NOMINAL WIDTH

NO SCALE

D98G

2026 STANDARD PLAN D98G

7-1-26

Return to Table of Contents

Dist	COUNTY	ROUTE	POST MILES TOTAL PROJECT	SHEET No.	TOTAL SHEETS

REGISTERED CIVIL ENGINEER

September 18, 2026
PLANS APPROVAL DATE

REGISTERED PROFESSIONAL ENGINEER Sean T. Penders No. C63744 Exp. 9-30-26 CIVIL STATE OF CALIFORNIA

THE STATE OF CALIFORNIA OR ITS OFFICERS OR AGENTS SHALL NOT BE RESPONSIBLE FOR THE ACCURACY OR COMPLETENESS OF SCANNED COPIES OF THIS PLAN SHEET.

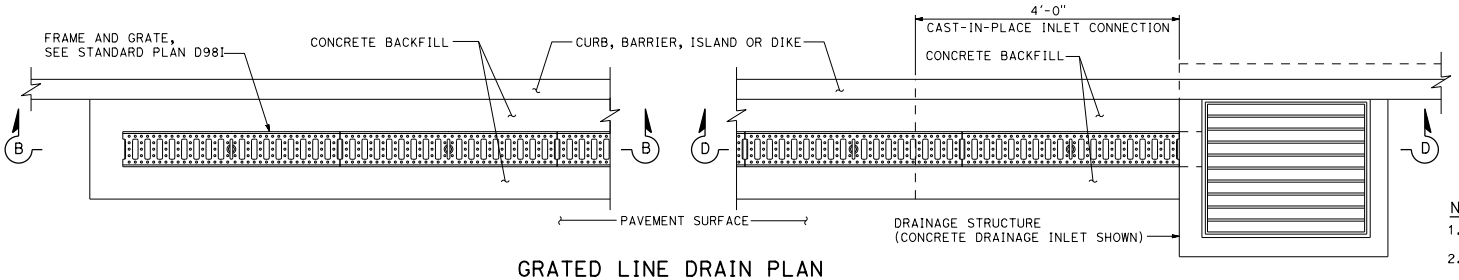

GRATED LINE DRAIN PLAN

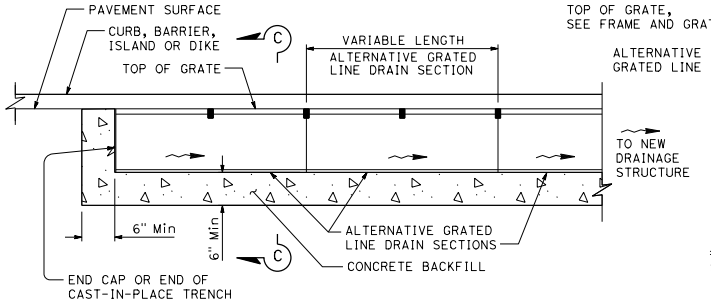

SECTION B-B

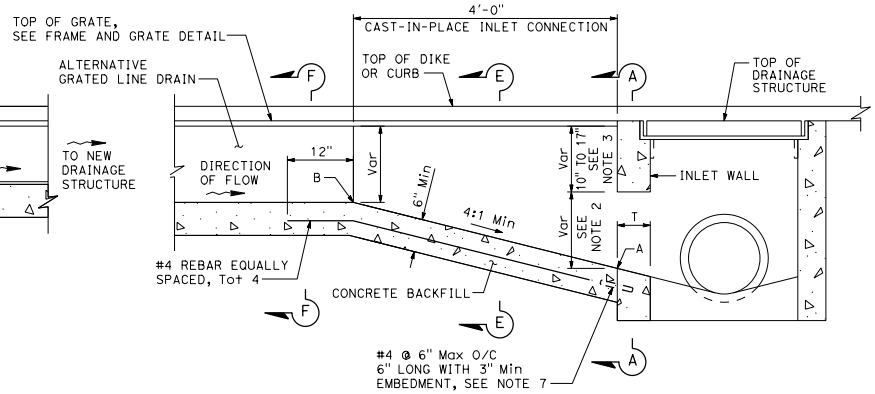

SECTION D-D

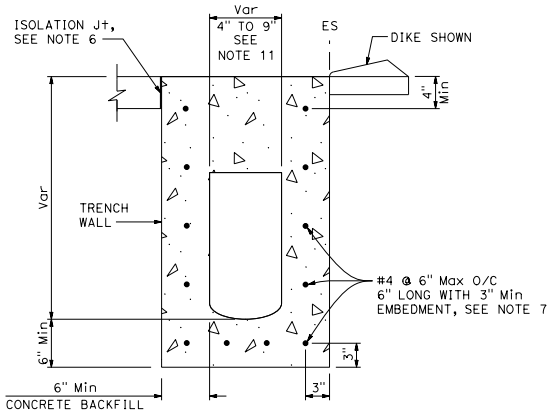

SECTION A-A

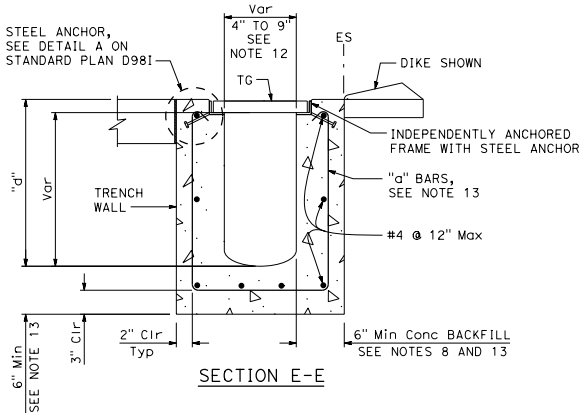

SECTION E-E

NOTES:

1. See quantity sheets for discharge capacity requirements.
2. Discharge capacity (cfs) at point A must be equivalent to maximum channel discharge capacity of grated line drain at point B.
3. Contractor to field verify minimum depth to avoid conflict with inlet top.
4. Grate patterns may vary from details shown. See special provisions.
5. See Standard Plan D98G for 4" polymer concrete grated line details.
6. Within PCC pavement, a 0.5" isolation joint must be made between pavement and concrete backfill. See isolation joint details on Standard Plans P45 and P46.
7. Bottom row of dowels to match inlet connection slope with 2" Min clear to inside of box. Place other dowels normal to inlet wall with 2" Min clear to inside of box.
8. Channel section shape and frame and grate configuration may vary.
9. Nominal dimensions shown. Allowable tolerances ±2%.
10. 3/16" maximum gap between adjacent grates.
11. Minimum channel width must be equal or greater than maximum channel width of grated line drain section.
12. See Standard Plan D98I for Section C-C and Section F-F.
13. Where "d" exceeds 3'-0", see table below:

"d" Max	CONCRETE BACKFILL THICKNESS	"a" BARS
4'-0"	6"	#4 @ 12
5'-0"	6"	#4 @ 8
6'-0"	8"	#4 @ 8

DESIGN NOTES:

DESIGN: AASHTO LRFD Bridge Design Specifications, 4th Edition with California Amendments

SOIL: γ = 120 pcf, ϕ = 34°

REINFORCED CONCRETE: f'_c = 3,600 psi
f_y = 60,000 psi

STATE OF CALIFORNIA
DEPARTMENT OF TRANSPORTATION

GRATED LINE DRAIN DETAILS No. 2 INLET CONNECTION DETAILS (ALL TYPES EXCEPT 4" NOMINAL WIDTH POLYMER CONCRETE)

NO SCALE

D98H

2026 STANDARD PLAN D98H

7-1-26

Return to Table of Contents

Dist	COUNTY	ROUTE	POST MILES TOTAL PROJECT	SHEET No.	TOTAL SHEETS

REGISTERED CIVIL ENGINEER

September 18, 2026
PLANS APPROVAL DATE

REGISTERED PROFESSIONAL ENGINEER Sean T. Penders No. C63744 Exp. 9-30-26 CIVIL STATE OF CALIFORNIA

THE STATE OF CALIFORNIA OR ITS OFFICERS OR AGENTS SHALL NOT BE RESPONSIBLE FOR THE ACCURACY OR COMPLETENESS OF SCANNED COPIES OF THIS PLAN SHEET.

NOTE:

1. See Standard Plan D98H for corresponding notes.

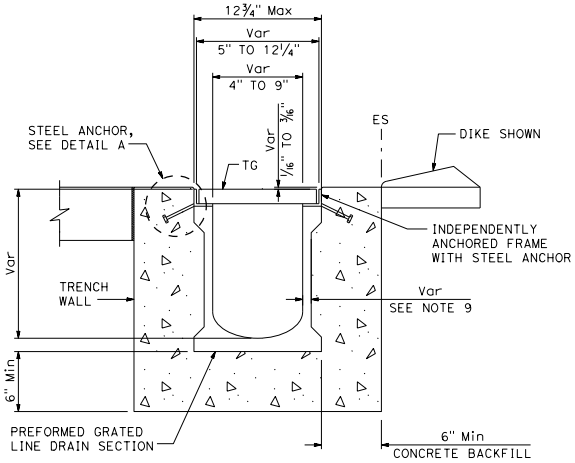

SECTION C-C
See Note 1

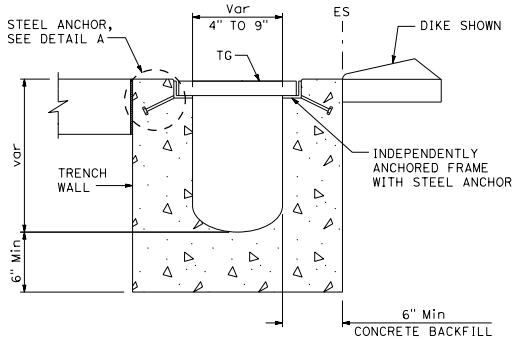

SECTION C-C
CAST-IN-PLACE ALTERNATIVE

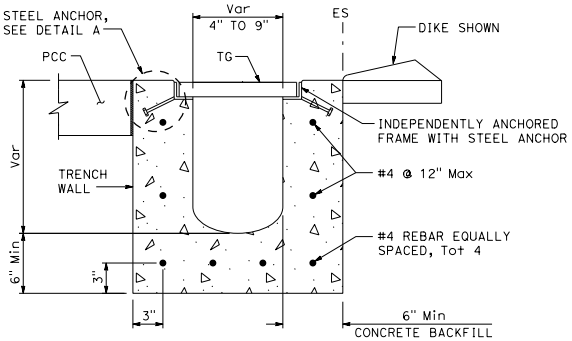

SECTION F-F

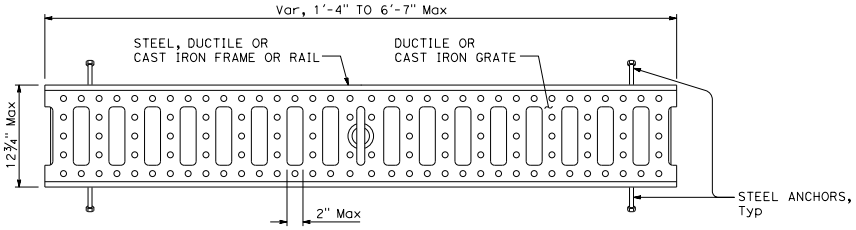

FRAME AND GRATE DETAIL

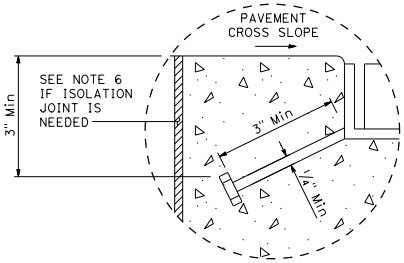

DETAIL A
See Note 1

STATE OF CALIFORNIA
DEPARTMENT OF TRANSPORTATION

GRATED LINE DRAIN DETAILS No. 3 (ALL TYPES EXCEPT 4" NOMINAL WIDTH POLYMER CONCRETE)

NO SCALE

D98I

2026 STANDARD PLAN D98I

7-1-26

Return to Table of Contents

Dist	COUNTY	ROUTE	POST MILES TOTAL PROJECT	SHEET No.	TOTAL SHEETS

REGISTERED CIVIL ENGINEER

September 18, 2026

PLANS APPROVAL DATE

Sean T. Penders No. C63744 Exp. 9-30-26 CIVIL STATE OF CALIFORNIA REGISTERED PROFESSIONAL ENGINEER

THE STATE OF CALIFORNIA OR ITS OFFICERS OR AGENTS SHALL NOT BE RESPONSIBLE FOR THE ACCURACY OR COMPLETENESS OF SCANNED COPIES OF THIS PLAN SHEET.

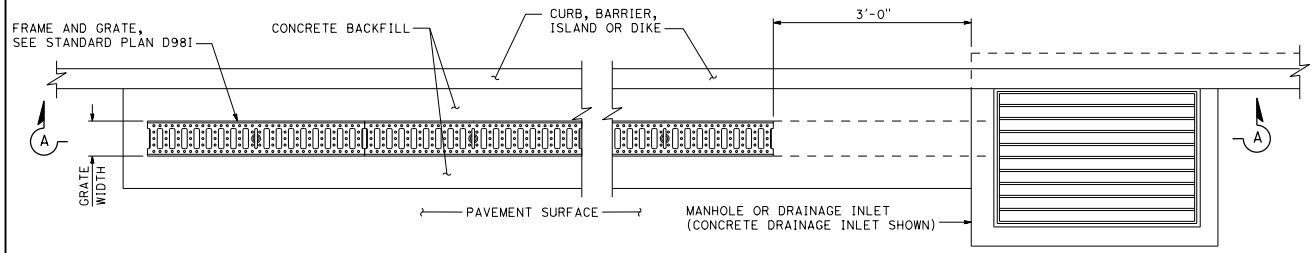

GRATED LINE DRAIN PLAN

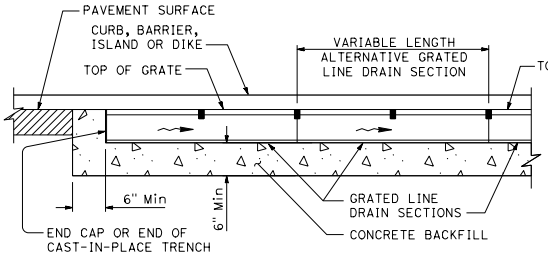

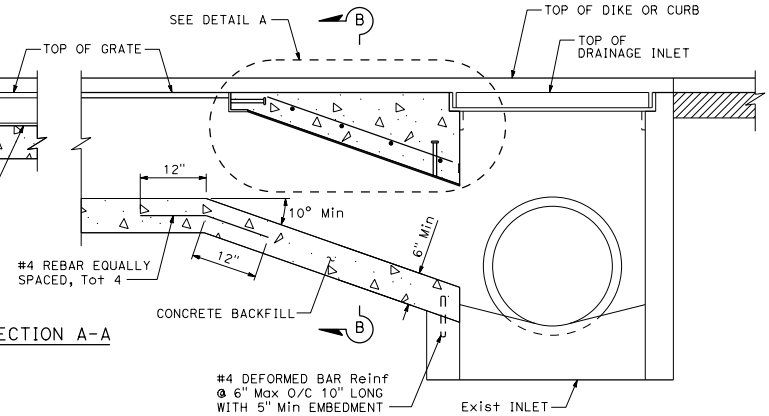

SECTION A-A

NOTES:

1. Preserve existing rebar during removal of side wall to tie to trench drain reinforcement. Install additional rebar to facilitate connection to drop inlet and replace damaged existing rebar. Doweling perpendicular to side wall in lieu of connecting to existing rebar is not permitted.

2. Drill rebar ends 3" into existing concrete, overlap and connect with double barrel mechanical coupler.

LEGEND:

PAVEMENT

LIMITS OF REMOVAL

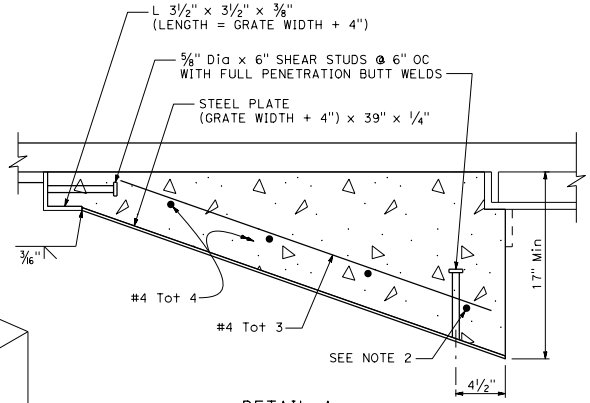

DETAIL A

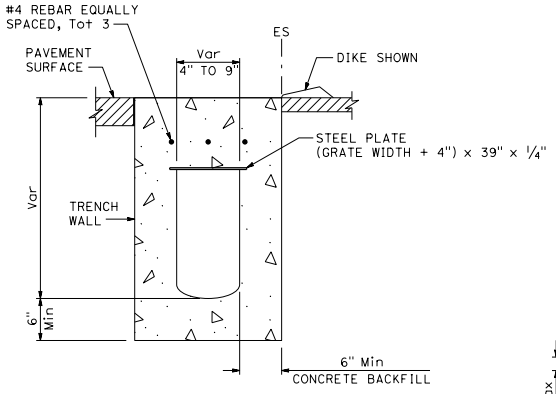

SECTION B-B

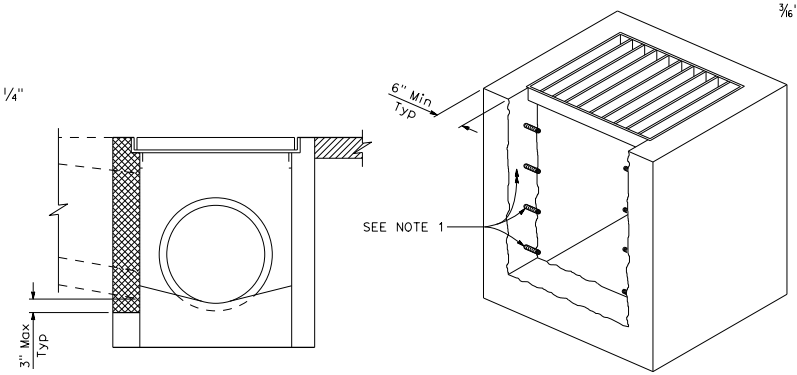

PARTIAL REMOVAL OF EXISTING DROP INLET

STATE OF CALIFORNIA
DEPARTMENT OF TRANSPORTATION

GRATED LINE DRAIN DETAILS No. 4 CONNECTION TO EXISTING DRAINAGE STRUCTURE

NO SCALE

D98J

2026 STANDARD PLAN D98J

7-1-26

Return to Table of Contents

Dist	COUNTY	ROUTE	POST MILES TOTAL PROJECT	SHEET No.	TOTAL SHEETS

REGISTERED CIVIL ENGINEER

September 18, 2026
PLANS APPROVAL DATE

REGISTERED PROFESSIONAL ENGINEER Sean T. Penders No. C63744 Exp. 9-30-26 CIVIL STATE OF CALIFORNIA

THE STATE OF CALIFORNIA OR ITS OFFICERS OR AGENTS SHALL NOT BE RESPONSIBLE FOR THE ACCURACY OR COMPLETENESS OF SCANNED COPIES OF THIS PLAN SHEET.

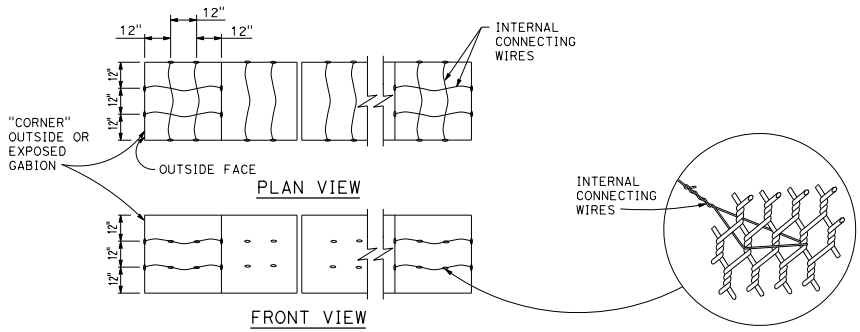

13.5-GAGE INTERNAL CONNECTING WIRES

STANDARD GABION SIZES					
LETTER CODE	LENGTH	WIDTH	HEIGHT	NUMBER OF DIAPHRAGMS	VOLUME CY
A	6'-0"	3'-0"	3'-0"	1	2.0
B	9'-0"	3'-0"	3'-0"	2	3.0
C	12'-0"	3'-0"	3'-0"	3	4.0
D	6'-0"	3'-0"	1'-6"	1	1.0
E	9'-0"	3'-0"	1'-6"	2	1.5
F	12'-0"	3'-0"	1'-6"	3	2.0
G	6'-0"	3'-0"	1'-0"	1	0.66
H	9'-0"	3'-0"	1'-0"	2	1.0
I	12'-0"	3'-0"	1'-0"	3	1.33

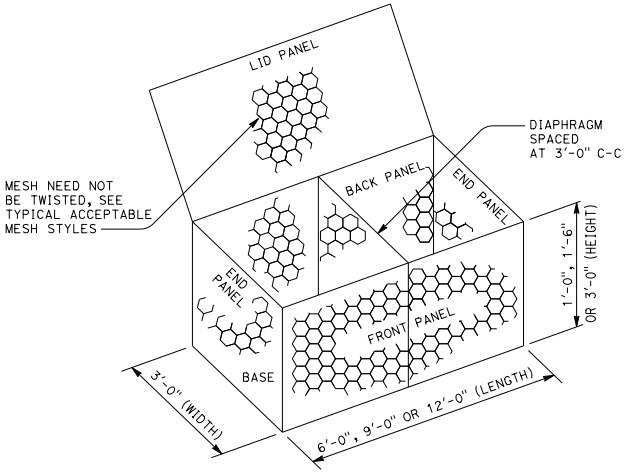

TYPICAL GABION BASKET

NOTE:

Area of opening not to exceed 10.3 square inches.

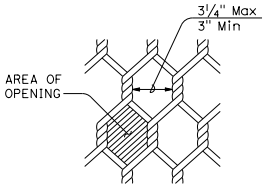

TWISTED MESH

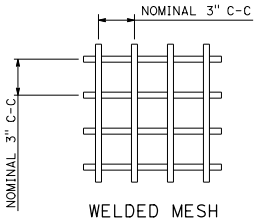

WELDED MESH

TYPICAL ACCEPTABLE MESH STYLES

NOTES:

1. Internal connecting wire (13.5-gage) to be installed across width of interior gabions and across width and length of end gabions.
2. Internal connecting wires required on all gabions 3'-0" high.
3. Preformed stiffeners (11-gage or 9-gage) are an acceptable alternative to internal connecting wires. Install them as recommended by manufacturer or as directed by the Engineer at ⅓ points.
4. Place rock in end gabion cell first, and continue by filling interior gabion cells.
5. For gabion dimensions, refer to table "Standard Gabion Sizes".

STATE OF CALIFORNIA
DEPARTMENT OF TRANSPORTATION

GABION BASKET DETAILS No. 1

NO SCALE

D100A

2026 STANDARD PLAN D100A

7-1-26

Return to Table of Contents

Dist	COUNTY	ROUTE	POST MILES TOTAL PROJECT	SHEET No.	TOTAL SHEETS

REGISTERED CIVIL ENGINEER

September 18, 2026

PLANS APPROVAL DATE

REGISTERED PROFESSIONAL ENGINEER Sean T. Penders No. C63744 Exp. 9-30-26 CIVIL STATE OF CALIFORNIA

THE STATE OF CALIFORNIA OR ITS OFFICERS OR AGENTS SHALL NOT BE RESPONSIBLE FOR THE ACCURACY OR COMPLETENESS OF SCANNED COPIES OF THIS PLAN SHEET.

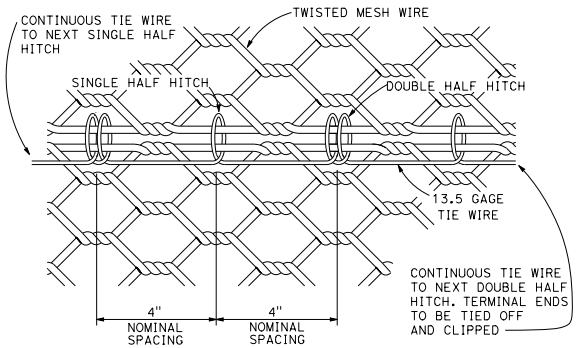

STANDARD TIE WIRE DETAIL

Alternating single and double half hitches (locked loops), see Note 2

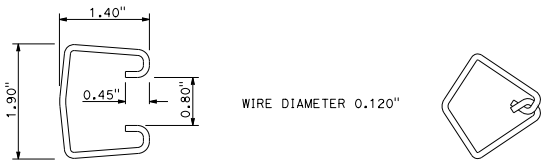

BEFORE CLOSURE AFTER CLOSURE

INTERLOCKING FASTENER

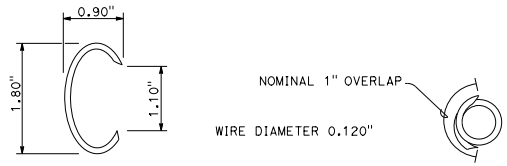

BEFORE CLOSURE AFTER CLOSURE

OVERLAPPING FASTENER

ALTERNATIVE GABION JOINT MATERIAL FASTENERS

Fastener dimensions nominal, see Note 3

NOTES:

1. A joint connection must be made where any panel edge meets another panel. This includes adjacent gabion baskets, individual panels within a basket, diaphragm edges, etc.
2. Standard tie wire may be used as a joint connector for either twisted or welded mesh. Spiral binder is to be used with welded mesh only.
3. When alternative gabion joint material fasteners are not capable of enclosing all wires along a joint, especially at Basket-To-Basket Joints, either standard tie wire or spiral binder, as applicable, must be used.

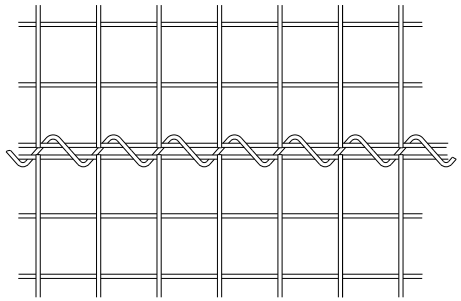

SPIRAL BINDER LACING

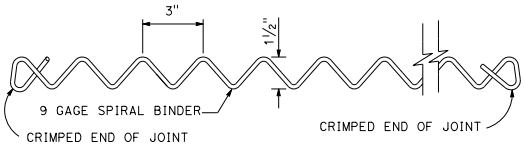

STANDARD SPIRAL BINDER

See Note 2

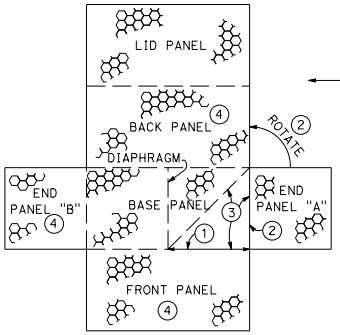

FLAT LAYOUT OF GABION BASKET

To Assemble Transitional Gabion Basket:

- Step 1 Cut mesh along joint between Front Panel and Base Panel.
- Step 2 Unfasten End Panel "A" from Base Panel and rotate End Panel "A". Fasten End Panel Panel "A" to Back Panel.
- Step 3 Fold the cut portion of the Base Panel into upright position along diagonal from the diaphragm to the corner of the Back Panel.
- Step 4 Fold the Back Panel, Front Panel and End Panel "B" into upright positions. Fasten End Panel "B" to the Back Panel and the Front Panel.
- Step 5 Rotate End Panel "A" and the cut portion of the Front Panel inward against the upturned portion of the Base Panel. Fasten along the overlapped portion of the Front Panel and End Panel "A". Fasten the overlapped portion of the Front Panel and End Panel "A" to the folded upright portion of the Base Panel along the diagonal (described in Step 3).
- Step 6 Fill the Transitional Gabion Basket with rock as per specifications.
- Step 7 Close lid and fold over corner of Lid Panel. Fasten along Lid Panel edges.

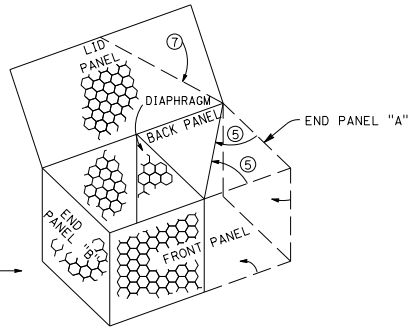

ASSEMBLED TRANSITIONAL GABION BASKET

TRANSITIONAL GABION BASKET

(For 6'-0", 9'-0" or 12'-0" gabion)

STATE OF CALIFORNIA
DEPARTMENT OF TRANSPORTATION

GABION BASKET DETAILS No. 2

NO SCALE

D100B

7-1-26

2026 STANDARD PLAN D100B

Return to Table of Contents

Dist	COUNTY	ROUTE	POST MILES TOTAL PROJECT	SHEET No.	TOTAL SHEETS

REGISTERED CIVIL ENGINEER

September 18, 2026

PLANS APPROVAL DATE

REGISTERED PROFESSIONAL ENGINEER Sean T. Penders No. C63744 Exp. 9-30-26 CIVIL STATE OF CALIFORNIA

THE STATE OF CALIFORNIA OR ITS OFFICERS OR AGENTS SHALL NOT BE RESPONSIBLE FOR THE ACCURACY OR COMPLETENESS OF SCANNED COPIES OF THIS PLAN SHEET.

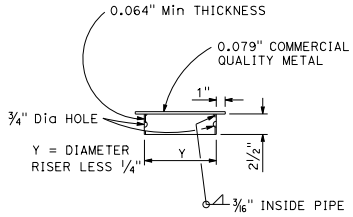

WELDED METAL COVER

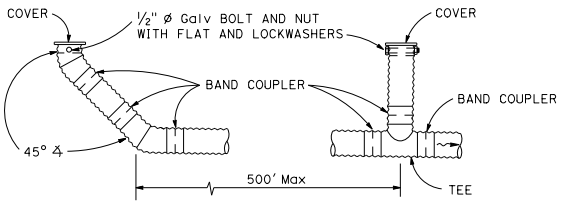

TERMINAL RISER VERTICAL RISER

Metal pipe risers and perforated metal pipe underdrain shown. Use type of pipe specified.

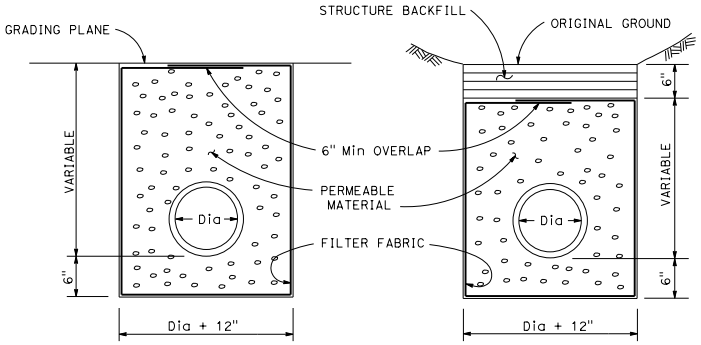

INSIDE SUBGRADE AREA OUTSIDE SUBGRADE AREA

EXCAVATION AND BACKFILL

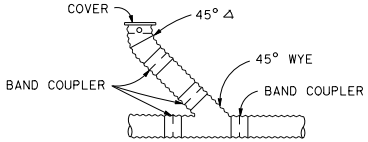

45° RISER

UNDERDRAIN RISERS

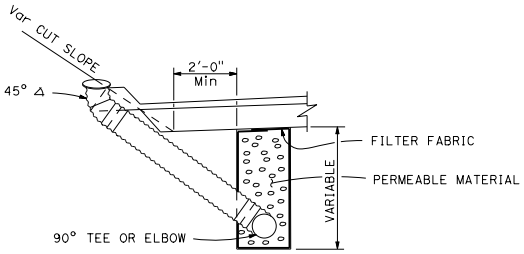

UNDERDRAIN LOCATION AND RISERS ANGLED TO CUT SLOPE

STATE OF CALIFORNIA
DEPARTMENT OF TRANSPORTATION

UNDERDRAINS

NO SCALE

D102

7-1-26

2026 STANDARD PLAN D102

Return to Table of Contents

Dist	COUNTY	ROUTE	POST MILES TOTAL PROJECT	SHEET No.	TOTAL SHEETS

REGISTERED CIVIL ENGINEER

September 18, 2026

PLANS APPROVAL DATE

REGISTERED PROFESSIONAL ENGINEER Sean T. Penders No. C63744 Exp. 9-30-26 CIVIL STATE OF CALIFORNIA

THE STATE OF CALIFORNIA OR ITS OFFICERS OR AGENTS SHALL NOT BE RESPONSIBLE FOR THE ACCURACY OR COMPLETENESS OF SCANNED COPIES OF THIS PLAN SHEET.

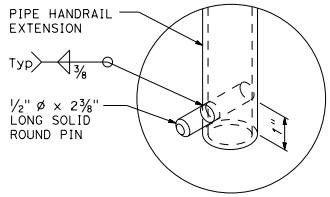

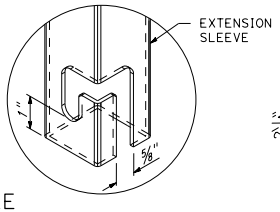

EXTENDABLE HANDRAIL LATCH

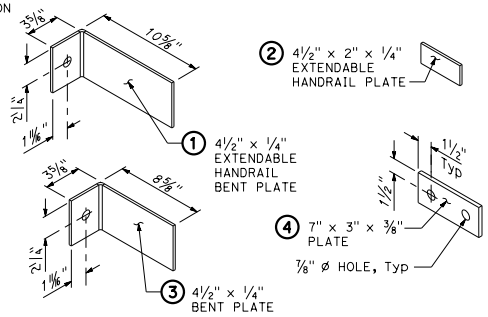

BRACKET DETAILS

NOTES (THIS SHEET ONLY):

1. Rungs must be skid resistant.
2. Use wall mounted handrails for vault depths between 4'-0" and 6'-6". For deeper vaults use extendable handrails detail. Vault depth is distance between top of wall and either top of floor slab or top of filter media material (use which ever distance is less). Ladders must not extend into filter media material.
3. No handrail required for Linear Radial GSRD 4'-0" depth, due to grate conflict.
4. At ladder locations provide a ladder on the outside of the wall if landing area finished grade elevations is 24" or greater from the top of wall elevation. use Standard Plan D75C.
5. Bolted ladder, see Standard Plan D75C is optional.

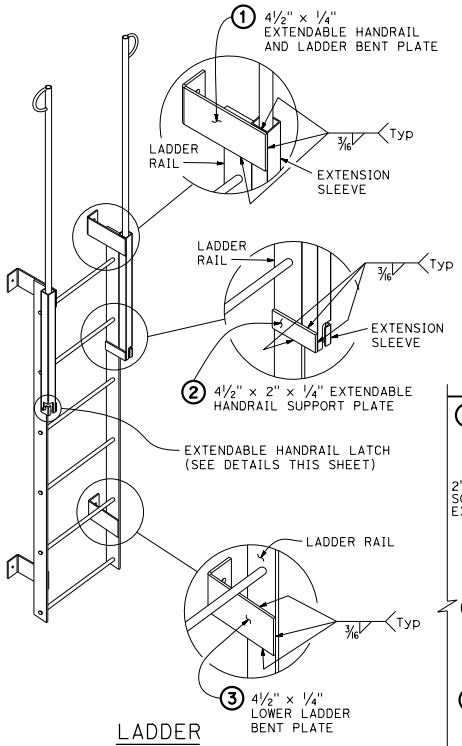

LADDER

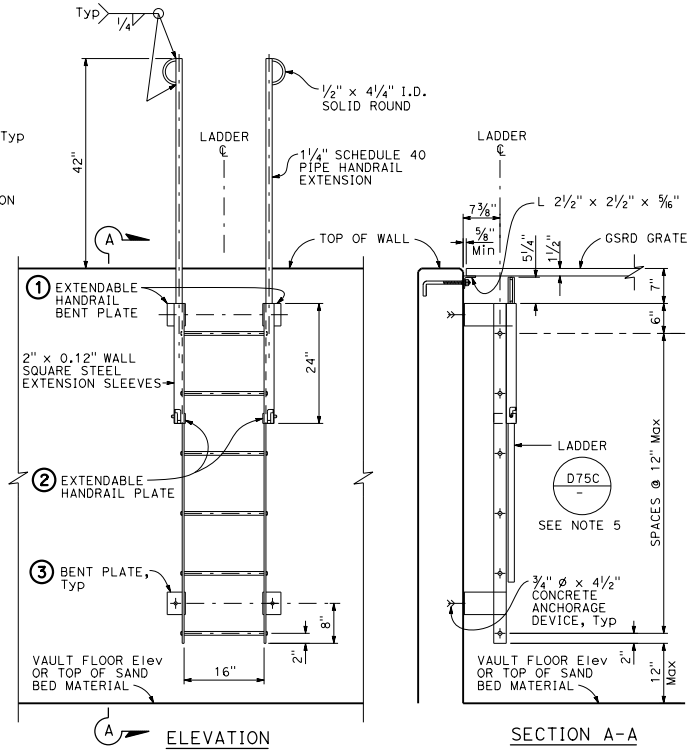

SECTION A-A

EXTENDABLE HANDRAIL

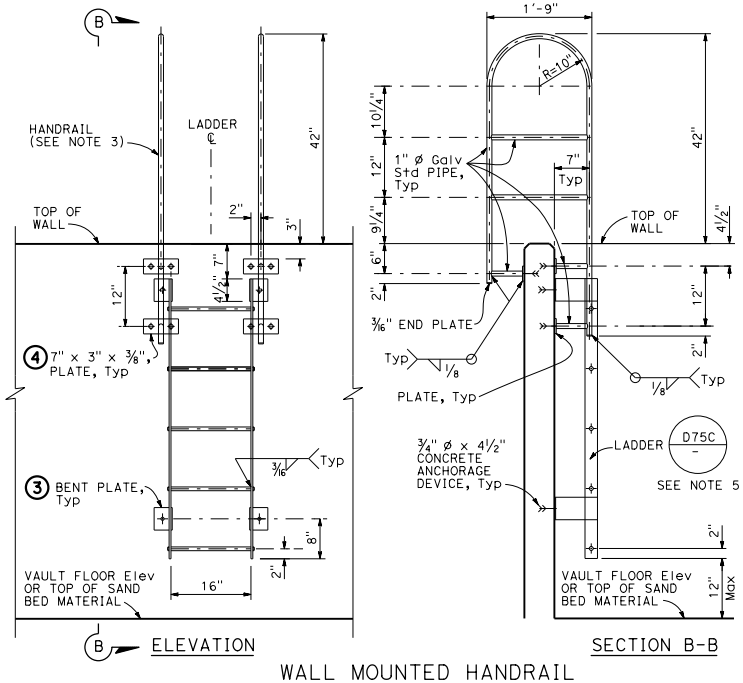

WALL MOUNTED HANDRAIL

STATE OF CALIFORNIA
DEPARTMENT OF TRANSPORTATION

LADDER DETAILS

NO SCALE

D118

2026 STANDARD PLAN D118

7-1-26

Return to Table of Contents

Dist	COUNTY	ROUTE	POST MILES TOTAL PROJECT	SHEET No.	TOTAL SHEETS

REGISTERED CIVIL ENGINEER

September 18, 2026
PLANS APPROVAL DATE

REGISTERED PROFESSIONAL ENGINEER Sean T. Penders No. C63744 Exp. 9-30-26 CIVIL STATE OF CALIFORNIA

THE STATE OF CALIFORNIA OR ITS OFFICERS OR AGENTS SHALL NOT BE RESPONSIBLE FOR THE ACCURACY OR COMPLETENESS OF SCANNED COPIES OF THIS PLAN SHEET.

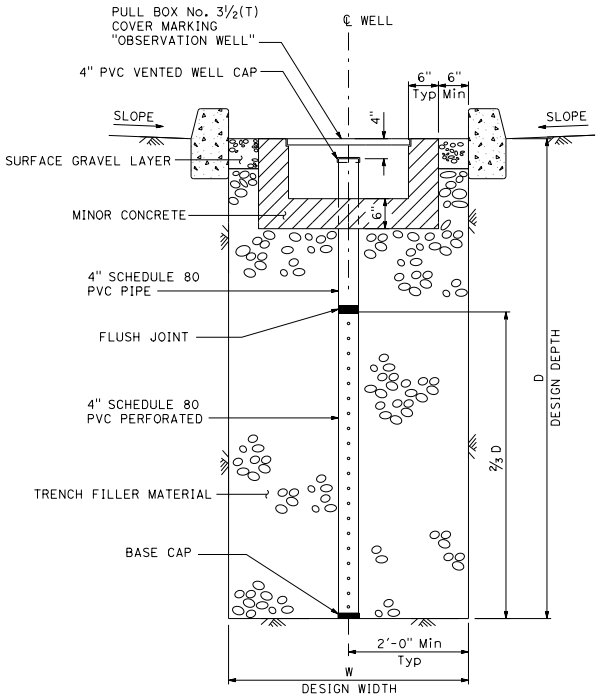

SECTION

OBSERVATION WELL

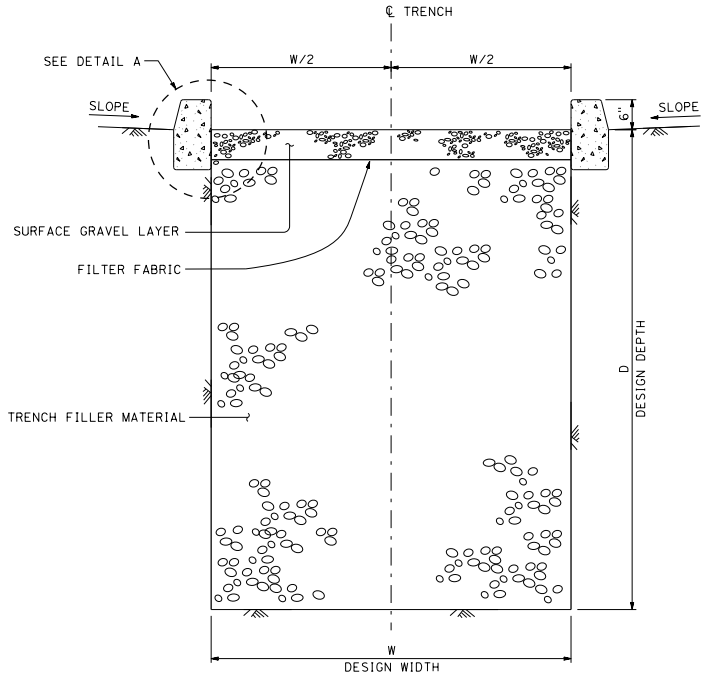

SECTION

INFILTRATION TRENCH

NOTES:

1. Filter fabric shall be placed between trench filler material and surface gravel layer of the infiltration trench.
2. Place concrete curb if shown on the plans, see Standard Plan A87A for details not shown.
3. Centerline of observation well to be placed a minimum of 2'-0" from edge of trench, when shown on the plans.
4. The pull box cover shall be flush with the top of the surface gravel layer, see Standard Plan ES-8B for details not shown.

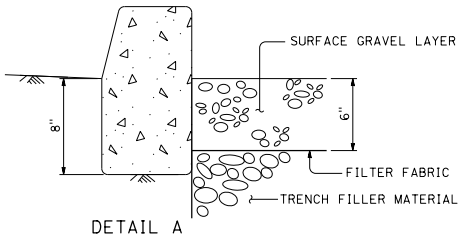

DETAIL A
See Note 2

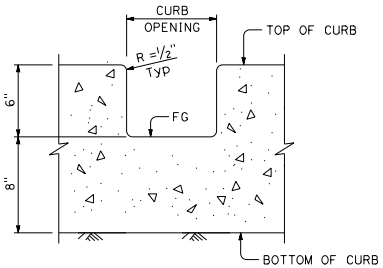

CURB OPENING DETAIL

MODIFIED TYPE A1-6 CURB

STATE OF CALIFORNIA
DEPARTMENT OF TRANSPORTATION

INFILTRATION TRENCH AND OBSERVATION WELL

NO SCALE

D131

2026 STANDARD PLAN D131

7-1-26

Return to Table of Contents

Dist	COUNTY	ROUTE	POST MILES TOTAL PROJECT	SHEET No.	TOTAL SHEETS

REGISTERED CIVIL ENGINEER

September 18, 2026
PLANS APPROVAL DATE

REGISTERED PROFESSIONAL ENGINEER Sean T. Penders No. C63744 Exp. 9-30-26 CIVIL STATE OF CALIFORNIA

THE STATE OF CALIFORNIA OR ITS OFFICERS OR AGENTS SHALL NOT BE RESPONSIBLE FOR THE ACCURACY OR COMPLETENESS OF SCANNED COPIES OF THIS PLAN SHEET.

GENERAL NOTES:

Designation:
Types of Gross Solids Removal Devices (GSRDs) are Linear Radial (LR) and Inclined Screen. The Linear Radial has either a standard or high velocity configuration noted as Linear Radial or Linear Radial (HV). All GSRD BMP Detail Drawings are applicable for velocities up to 20 fps.

Special Reinforcement Coverage:
GSRD BMP Detail Drawings are not to be used in a corrosive environment or where there is a severe abrasive flow condition or in freeze-thaw locations.

Special Design:
Required for ground water conditions above bottom of GSRD, surcharge loads exceeding HS20 truck load, design bearing pressures or sizes greater than those on this plan.

Traffic Loading:
No traffic load is allowed over GSRDs. As determined by the Engineer, barriers or MBGR shall be provided between GSRDs and traffic lanes.

INCLINED SCREEN DESIGN CHART

GSRD TYPE	TOTAL SCREEN LENGTH "C"	FLOW RATE (cfs)
A	3'-4"	5.83
B	5'-0"	8.74
C	6'-8"	11.65
D	8'-4"	14.57
E	10'-0"	17.48
F	11'-8"	20.39

NOTE:
1. The total screen length "C" is shown on Standard Plans D139B, D139F1 and D139G1.

DESIGN NOTES:

Specifications:
Design:
Bridge Design Specification April 2000 (LFD) (1996 AASHTO) with interims and revisions by Caltrans

Wall (LFD) : 1.5D + 1.5E and 1.5D + W
Footing (LFD): 1.5D + 1.5E
Where: D = Dead Load
E = Earth Load

Capacity reduction factor is included.

Earth Load: 125 lb/ft vertical,
Water Load: 62.4 lb/ft horizontal,

Equivalent Fluid Pressure = 100 lb/ft horizontal (Case I).

Earth pressure for 2:1 unlimited slope determined from Rankine's formula with ø = 33°42' (Case II).

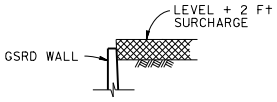

CASE I

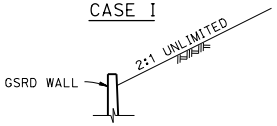

CASE II

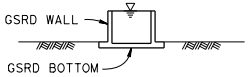

CASE III

DETAIL OF DESIGN LOADING CASES

CASE I Level + 2'-0" surcharge, GSRD empty
CASE II 2:1 Unlimited slope, GSRD empty
CASE III GSRD full of water, no soil pressure

Grating (LL) Load :
0.5 psi

Unit Stresses:
f'_c = 4.0 ksi
f_y = 60 ksi (bar reinforcing)

Design Soil Bearing Pressure (Service Load) = 20 psi

ABBREVIATIONS:

cfs	CUBIC FEET PER SECOND
EWT&B	EACH WAY TOP AND BOTTOM
fps	FEET PER SECOND
GSRD	GROSS SOLIDS REMOVAL DEVICE
LL	LIVE LOAD
FRP	FIBERGLASS REINFORCED PLASTIC

LEGEND

DESIGN WATER DEPTH

STANDARD PLAN SHEET No.

DETAIL No.

NOTES:

Expansion joints:
Inverts - No expansion joints permitted.
Walls - Place ½" expansion joint filler vertically at 26'-0" centers with strip water stop (B0-1 / 1-3).

Construction Joints:
Construction joints may be permitted if normal (or radial) to ℄ of GSRD.

Backfill:
See Standard Specifications, except the difference in backfill will not exceed 4 ft between side walls and will not exceed the lesser of wall height "H" or 4 ft between inlet and outlet walls.

Earthwork:
Excavation and Backfill with Cut and Exposed conditions:

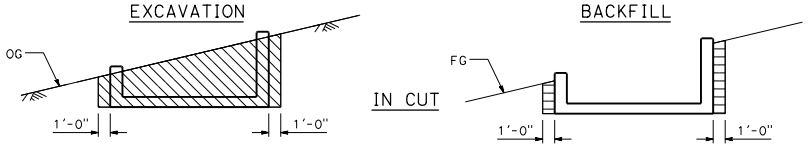

INCLINED SCREEN

LEGEND

STRUCTURE EXCAVATION

STRUCTURE BACKFILL 90% RELATIVE COMPACTION

NOTES:

1. Slope or shore excavation sides as necessary.
2. Dimensions shown are minimum.

STATE OF CALIFORNIA
DEPARTMENT OF TRANSPORTATION

GROSS SOLIDS REMOVAL DEVICE INCLINED SCREEN LEGEND

NO SCALE

D139A

2026 STANDARD PLAN D139A

7-1-26

Return to Table of Contents

Dist	COUNTY	ROUTE	POST MILES TOTAL PROJECT	SHEET No.	TOTAL SHEETS

REGISTERED CIVIL ENGINEER

September 18, 2026

PLANS APPROVAL DATE

REGISTERED PROFESSIONAL ENGINEER Sean T. Penders No. C63744 Exp. 9-30-26 CIVIL STATE OF CALIFORNIA

THE STATE OF CALIFORNIA OR ITS OFFICERS OR AGENTS SHALL NOT BE RESPONSIBLE FOR THE ACCURACY OR COMPLETENESS OF SCANNED COPIES OF THIS PLAN SHEET.

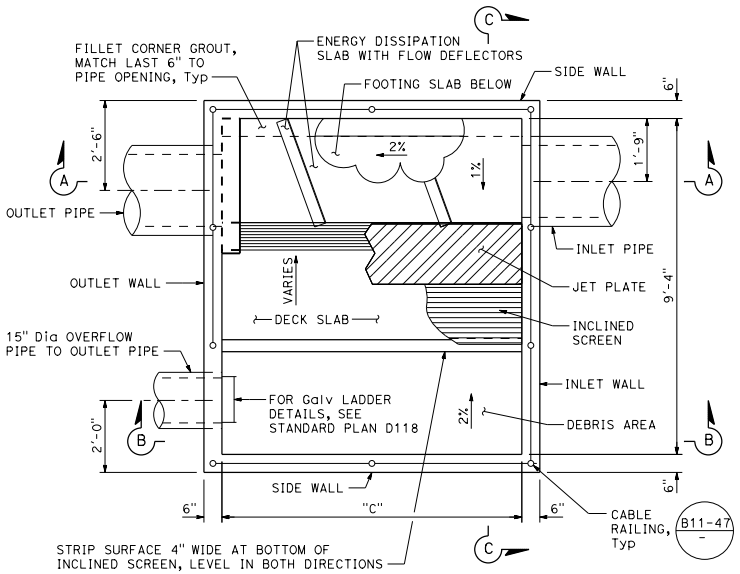

PLAN

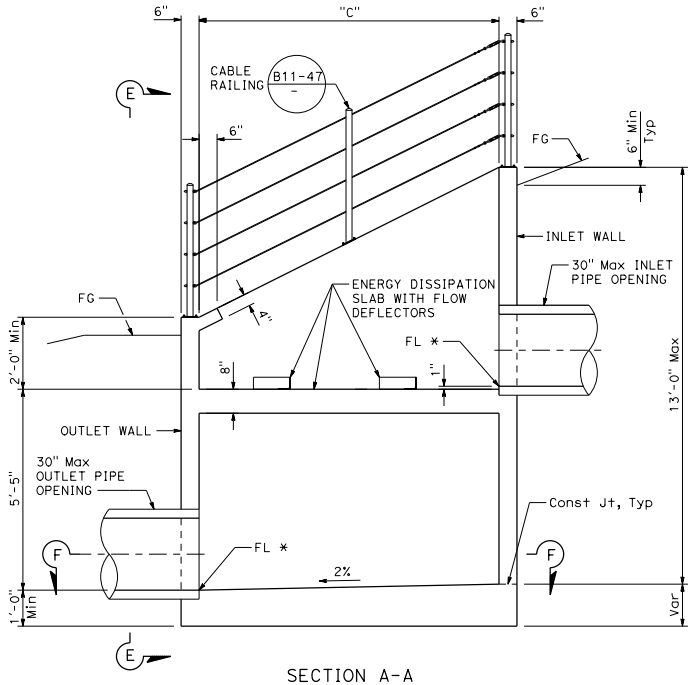

SECTION A-A

* For FL elevations, see "Drainage Profiles".

Jet plate not shown for clarity, see Standard Plan D139D.

NOTES (THIS SHEET ONLY):

1. See Drainage Plans for additional details.
2. Inlet and outlet pipe opening sizes are shown on Drainage Plans. The overflow and outlet piping must be connected via standard elbows and tees.
3. For Sections B-B and C-C, see Standard Plans D139F1 and D139G1.
4. For reinforcing details which include Sections A-A, B-B, C-C and F-F, see Standard Plan D139D.
5. For inlet and outlet pipe details not shown, see Standard Plan D139C.
6. For View E-E, see Standard Plan D139C.

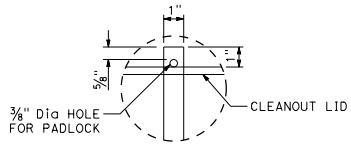

VIEW AA-AA

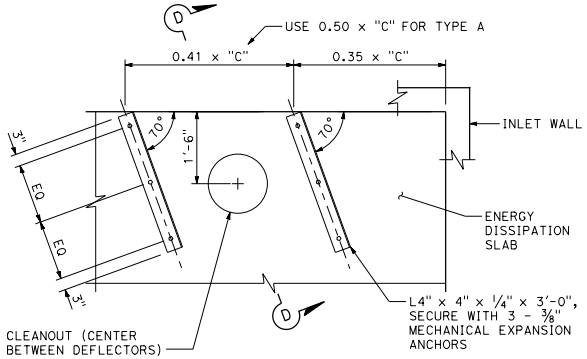

DEFLECTOR PLAN

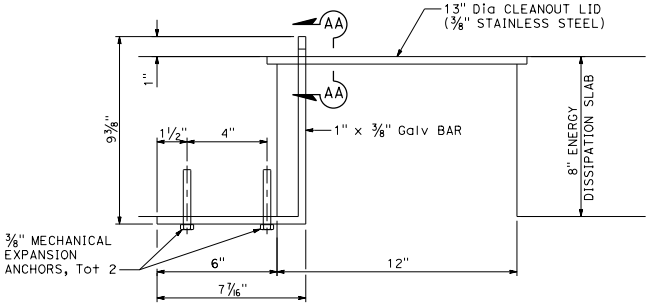

SECTION D-D

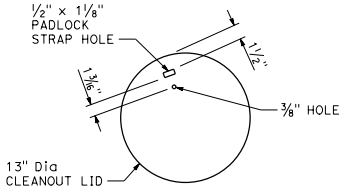

CLEANOUT LID DETAIL

STATE OF CALIFORNIA
DEPARTMENT OF TRANSPORTATION

GROSS SOLIDS REMOVAL DEVICE INCLINED SCREEN LAYOUT

NO SCALE

D139B

2026 STANDARD PLAN D139B

7-1-26

Return to Table of Contents

Dist	COUNTY	ROUTE	POST MILES TOTAL PROJECT	SHEET No.	TOTAL SHEETS

REGISTERED CIVIL ENGINEER

September 18, 2026
PLANS APPROVAL DATE

REGISTERED PROFESSIONAL ENGINEER Sean T. Penders No. C63744 Exp. 9-30-26 CIVIL STATE OF CALIFORNIA

THE STATE OF CALIFORNIA OR ITS OFFICERS OR AGENTS SHALL NOT BE RESPONSIBLE FOR THE ACCURACY OR COMPLETENESS OF SCANNED COPIES OF THIS PLAN SHEET.

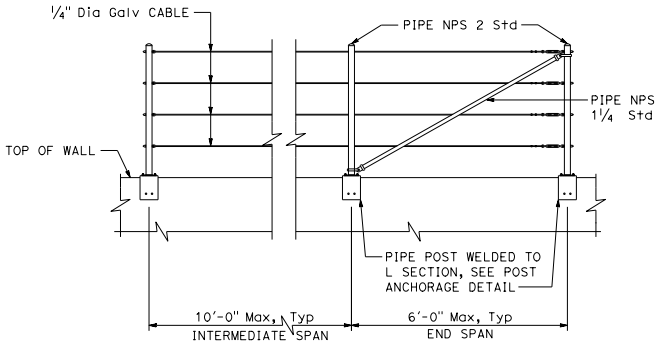

CABLE RAILING

NOTE:
Refer to Standard Plan B11-47 for additonal information.

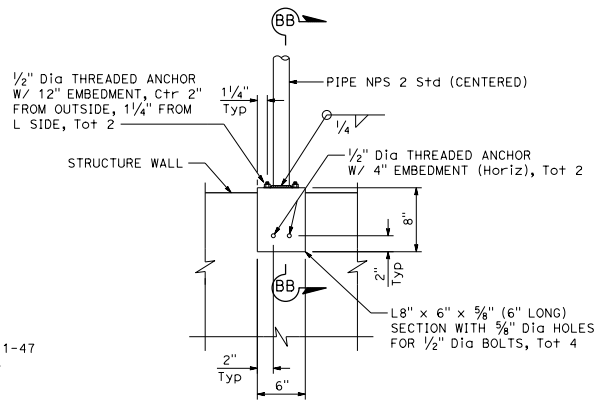

POST ANCHORAGE

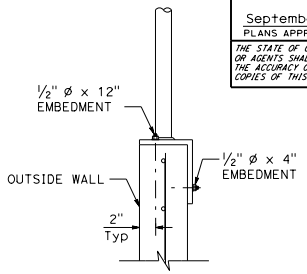

SECTION BB-BB

NOTES:

1. Safety chain must be 1/4" galvanized steel coil chain, approximately 12 links per foot. Length must be minimum which allows lock-up of safety railing. Minimum of two safety chains per safety railing. Material must be grade 43 high test chain ASTM A413.
2. For View E-E location, see Standard Plan D139B.

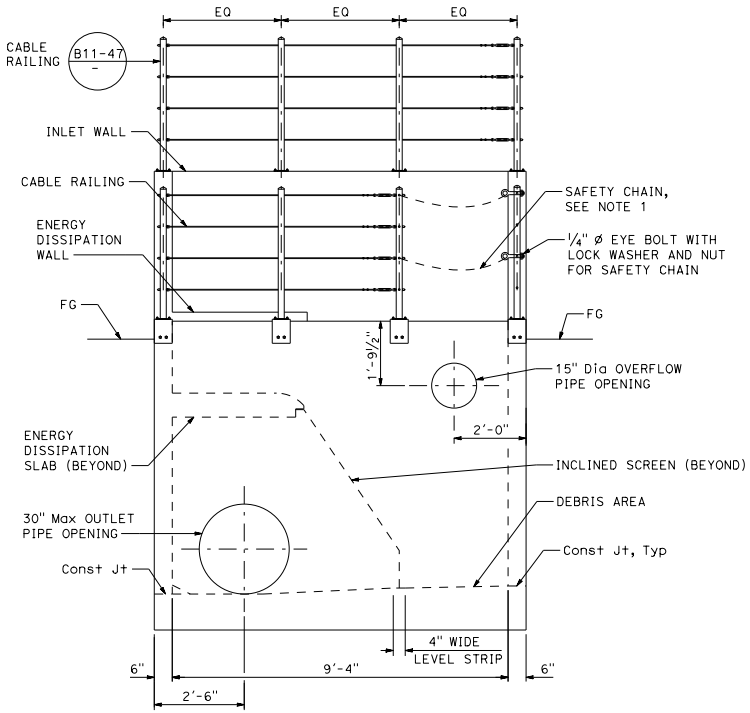

VIEW E-E

NOTE:
Jet plate and flow deflectors not shown for clarity.

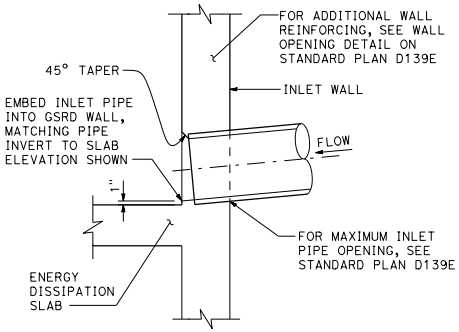

INLET DETAIL

Pipe entrance at wall

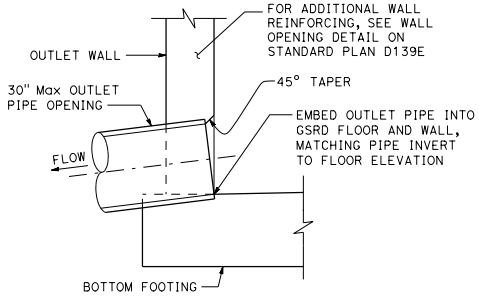

OUTLET DETAIL

Pipe exit at wall - Inclined Screen

STATE OF CALIFORNIA
DEPARTMENT OF TRANSPORTATION

GROSS SOLIDS REMOVAL DEVICE INCLINED SCREEN DETAILS No. 1

NO SCALE

D139C

2026 STANDARD PLAN D139C

7-1-26

Return to Table of Contents

Dist	COUNTY	ROUTE	POST MILES TOTAL PROJECT	SHEET No.	TOTAL SHEETS

REGISTERED CIVIL ENGINEER

September 18, 2026
PLANS APPROVAL DATE

REGISTERED PROFESSIONAL ENGINEER Sean T. Penders No. C63744 Exp. 9-30-26 CIVIL STATE OF CALIFORNIA

THE STATE OF CALIFORNIA OR ITS OFFICERS OR AGENTS SHALL NOT BE RESPONSIBLE FOR THE ACCURACY OR COMPLETENESS OF SCANNED COPIES OF THIS PLAN SHEET.

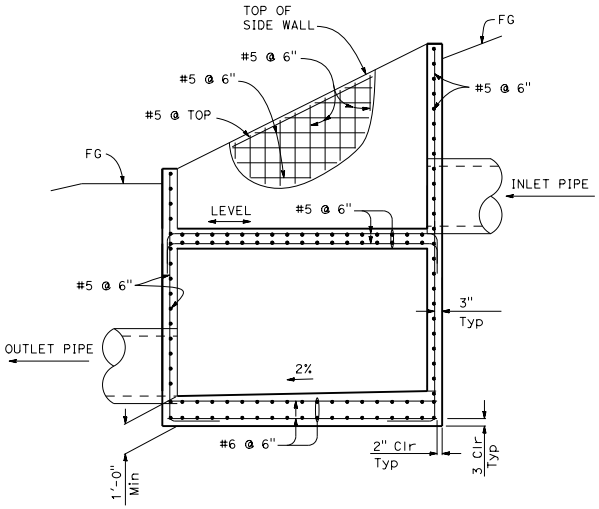

SECTION A-A - REINFORCEMENT

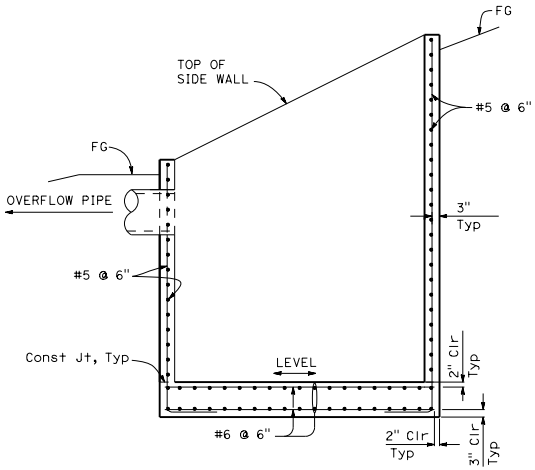

SECTION B-B - REINFORCEMENT

NOTES:

1. For additional reinforcing at openings, see Standard Plan D139E.
2. For section locations, see Standard Plan D139B.
3. 3/8" jet plate with L2" x 2" x 1/4" braced supports around perimeter for screen lengths up to 6'-8". For longer screen lengths use L3" x 2" x 1/4". Use additional interior supports at 2'-6" Max O.C. equally spaced. Fillet weld brace supports to plate @ 1'-6" O.C. Fasten jet plate assembly to jet end supports with five 1/4" machine bolts A307 equally spaced. Start bolt pattern @ 2 1/4" Max from edge.

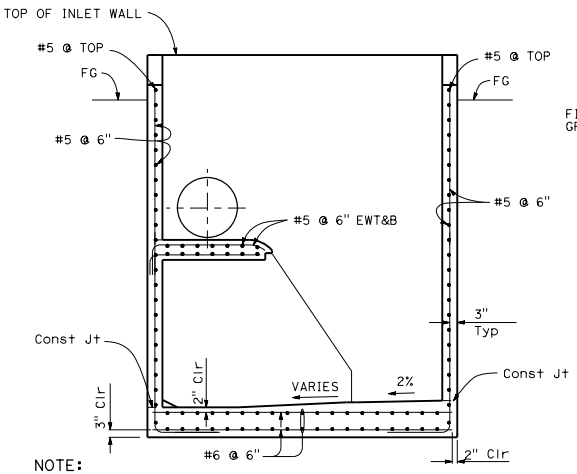

NOTE:

Flow deflectors and jet plate not shown for clarity

SECTION C-C - REINFORCEMENT

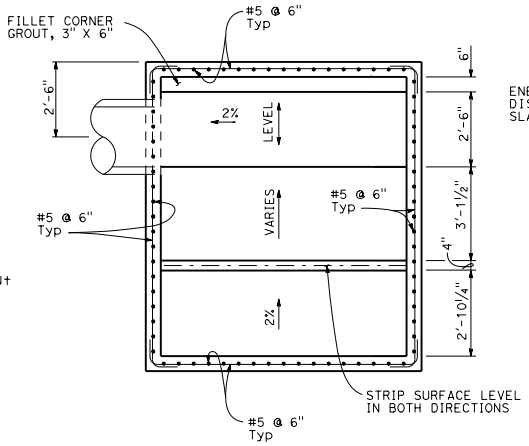

SECTION F-F

WALL REINFORCEMENT AND GRADES AT FOOTING SLAB

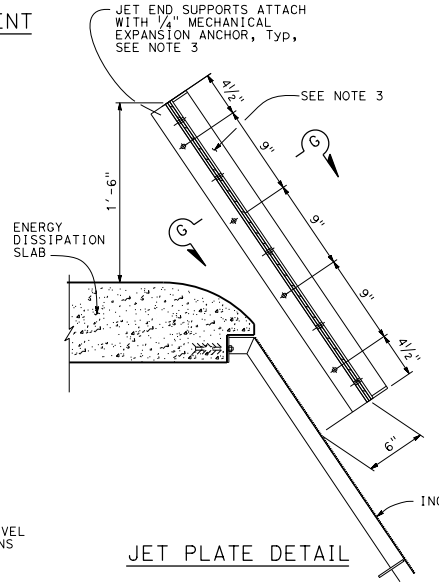

JET PLATE DETAIL

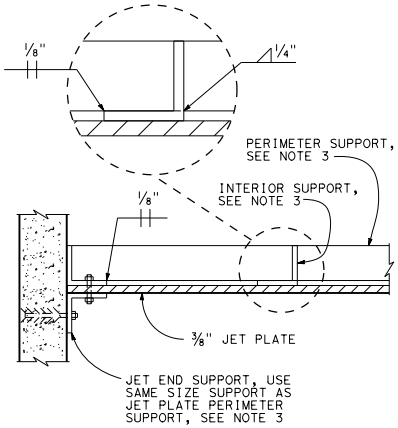

SECTION G-G

STATE OF CALIFORNIA
DEPARTMENT OF TRANSPORTATION

GROSS SOLIDS REMOVAL DEVICE INCLINED SCREEN DETAILS No. 2

NO SCALE

D139D

2026 STANDARD PLAN D139D

7-1-26

Return to Table of Contents

Dist	COUNTY	ROUTE	POST MILES TOTAL PROJECT	SHEET No.	TOTAL SHEETS

REGISTERED CIVIL ENGINEER

September 18, 2026

PLANS APPROVAL DATE

REGISTERED PROFESSIONAL ENGINEER Sean T. Penders No. C63744 Exp. 9-30-26 CIVIL STATE OF CALIFORNIA

THE STATE OF CALIFORNIA OR ITS OFFICERS OR AGENTS SHALL NOT BE RESPONSIBLE FOR THE ACCURACY OR COMPLETENESS OF SCANNED COPIES OF THIS PLAN SHEET.

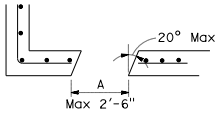

SECTION L-L

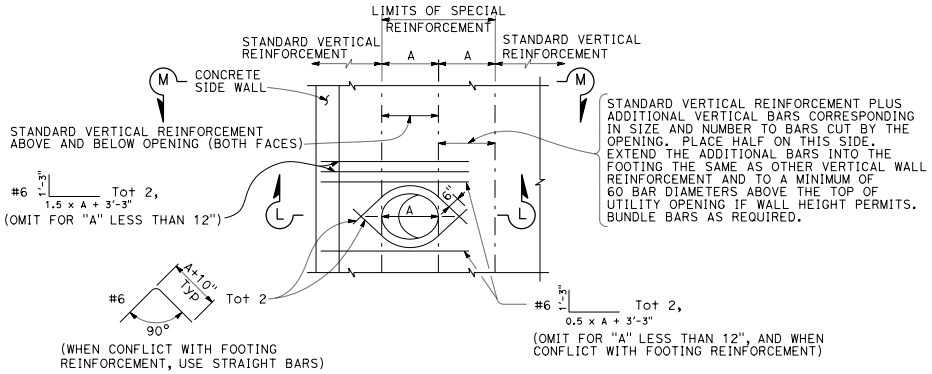

WALL OPENING

To be used at inlet and outlet pipe locations

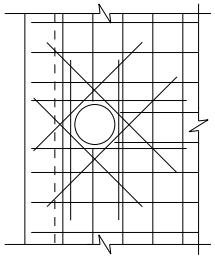

ENERGY DISSIPATION SLAB

To be used at cleanout
(Place 8 - #5 as shown top and bottom. Extend bars 1'-3" past the opening or use 6" hook if development length is not available.)

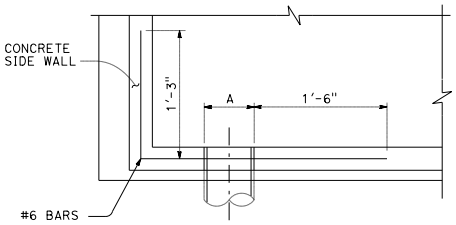

SECTION M-M

(Only specified horizontal bars are shown)

NOTE:

In all opening locations, horizontal reinforcement to be standard except as shown. All reinforcement to clear opening by 2" minimum.

STATE OF CALIFORNIA
DEPARTMENT OF TRANSPORTATION

GROSS SOLIDS REMOVAL DEVICE INCLINED SCREEN DETAILS No. 3 WALL OPENING DETAILS

NO SCALE

D139E

2026 STANDARD PLAN D139E

7-1-26

Return to Table of Contents

Dist	COUNTY	ROUTE	POST MILES TOTAL PROJECT	SHEET No.	TOTAL SHEETS

REGISTERED CIVIL ENGINEER

September 18, 2026
PLANS APPROVAL DATE

REGISTERED PROFESSIONAL ENGINEER
Sean T. Penders
No. C63744
Exp. 9-30-26
CIVIL
STATE OF CALIFORNIA

THE STATE OF CALIFORNIA OR ITS OFFICERS OR AGENTS SHALL NOT BE RESPONSIBLE FOR THE ACCURACY OR COMPLETENESS OF SCANNED COPIES OF THIS PLAN SHEET.

NOTES:

1. See Drainage Plans for additional details.
2. For Section B-B and C-C locations, see Standard Plan D139B.
3. Inlet and outlet piping opening sizes are shown on the Drainage Plans. The overflow and outlet piping shall be connected via standard elbows and tees.
4. For inlet and outlet pipe details not shown, see Drainage Plans.

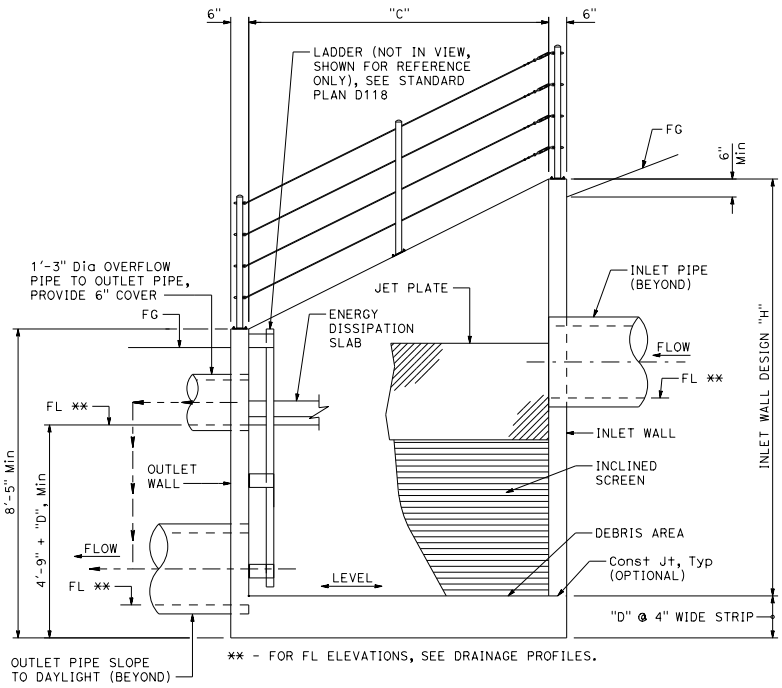

SECTION B-B

Flow deflectors not shown for clarity

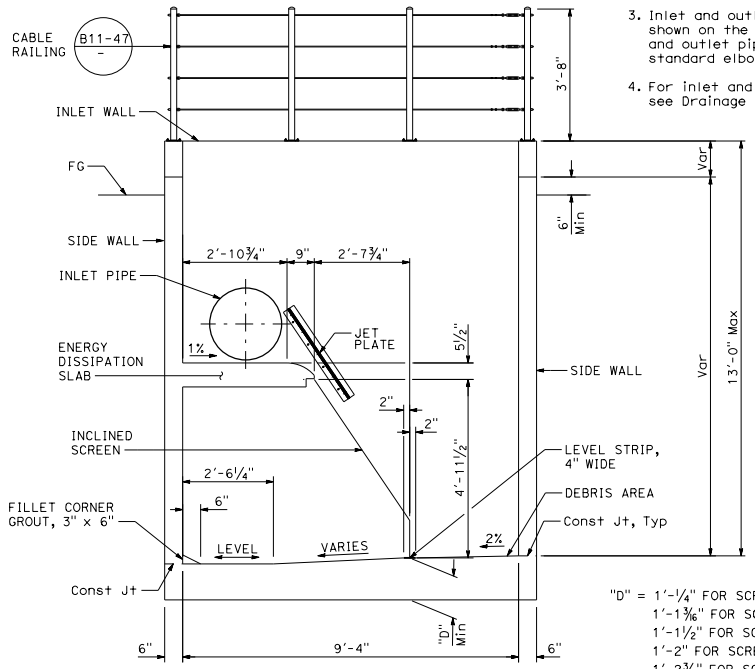

SECTION C-C

Flow deflectors not shown for clarity

"D" = 1'-¼" FOR SCREEN LENGTH OF 3'-4⅛"
1'-1 3/16" FOR SCREEN LENGTH OF 5'-0"
1'-1½" FOR SCREEN LENGTH OF 6'-8"
1'-2" FOR SCREEN LENGTH OF 8'-4"
1'-2⅜" FOR SCREEN LENGTH OF 10'-0"
1'-2¾" FOR SCREEN LENGTH OF 11'-8⅛"

STATE OF CALIFORNIA
DEPARTMENT OF TRANSPORTATION

GROSS SOLIDS REMOVAL DEVICE INCLINED SCREEN DETAILS No. 4 WEDGE-WIRE SCREEN

NO SCALE

D139F1

7-1-26

2026 STANDARD PLAN D139F1

Return to Table of Contents

Dist	COUNTY	ROUTE	POST MILES TOTAL PROJECT	SHEET No.	TOTAL SHEETS

REGISTERED CIVIL ENGINEER

September 18, 2026
PLANS APPROVAL DATE

REGISTERED PROFESSIONAL ENGINEER Sean T. Penders No. C63744 Exp. 9-30-26 CIVIL STATE OF CALIFORNIA

THE STATE OF CALIFORNIA OR ITS OFFICERS OR AGENTS SHALL NOT BE RESPONSIBLE FOR THE ACCURACY OR COMPLETENESS OF SCANNED COPIES OF THIS PLAN SHEET.

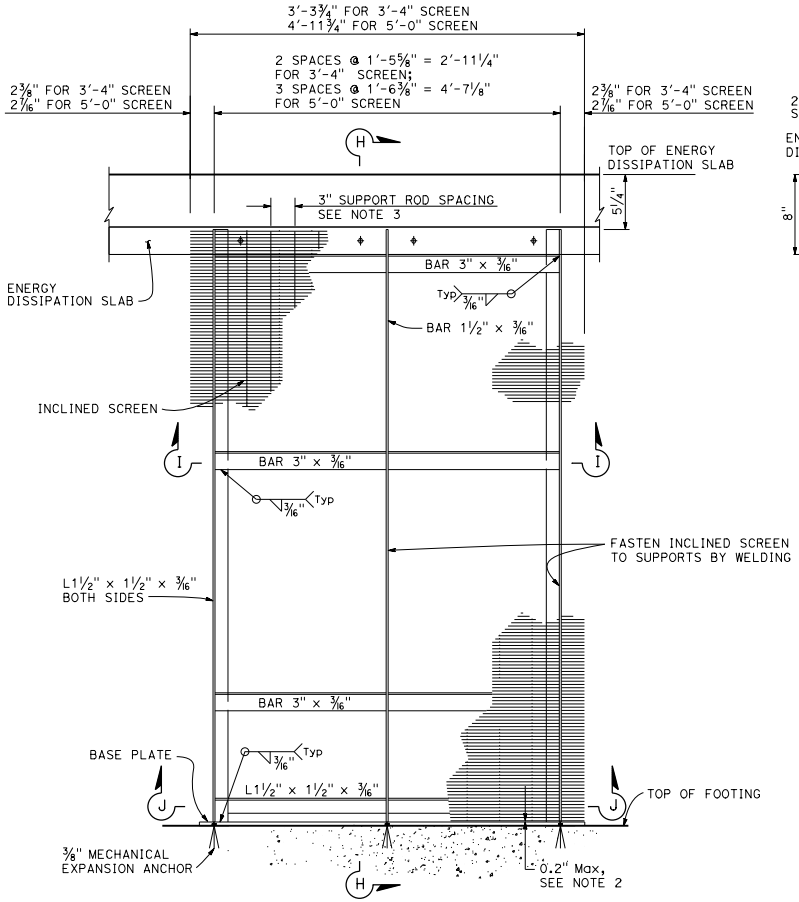

ELEVATION

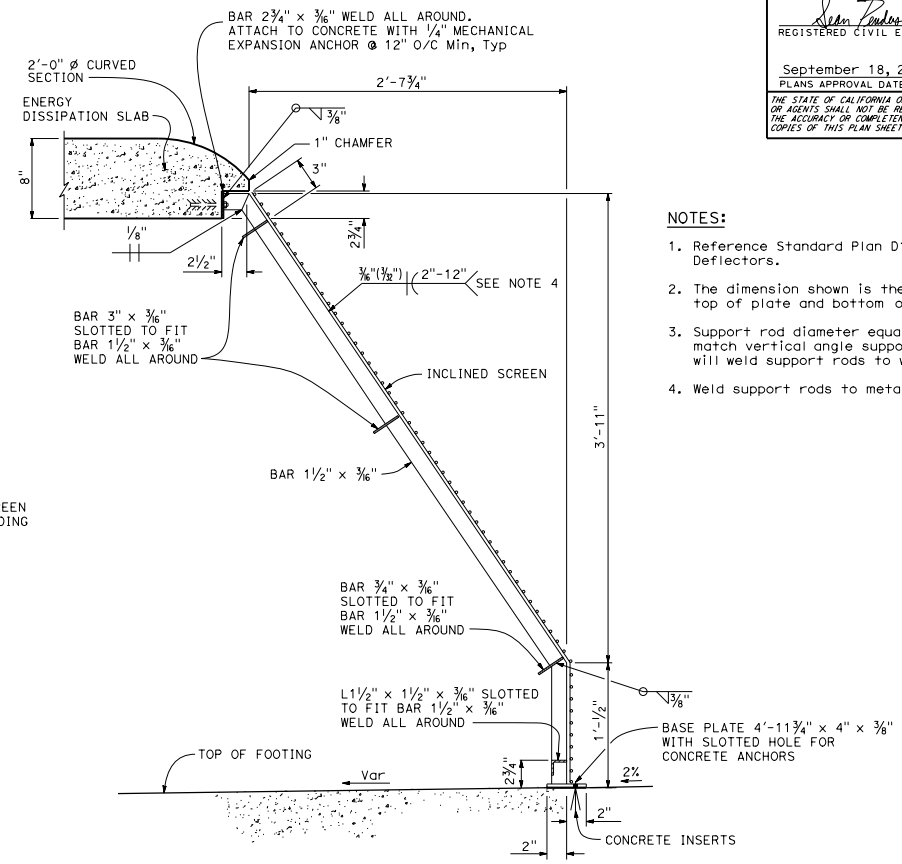

SECTION H-H

NOTES:

1. Reference Standard Plan D139D for Jet and Deflectors.
2. The dimension shown is the distance between top of plate and bottom of wire.
3. Support rod diameter equals ⅜". Align rods to match vertical angle supports. Screen manufacturer will weld support rods to wedge wire.
4. Weld support rods to metal frame (all around).

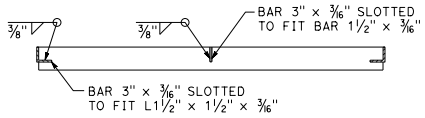

SECTION I-I

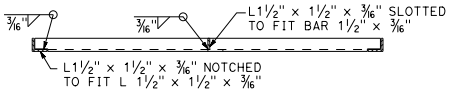

SECTION J-J

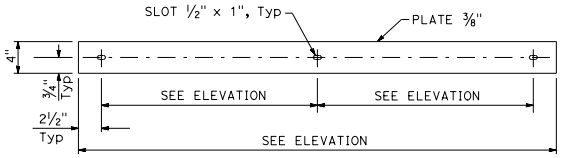

BASE PLATE

STATE OF CALIFORNIA
DEPARTMENT OF TRANSPORTATION

GROSS SOLIDS REMOVAL DEVICE INCLINED SCREEN DETAILS No. 5 WEDGE-WIRE SCREEN

NO SCALE

D139F2

2026 STANDARD PLAN D139F2

7-1-26

Return to Table of Contents

Dist	COUNTY	ROUTE	POST MILES TOTAL PROJECT	SHEET No.	TOTAL SHEETS

REGISTERED CIVIL ENGINEER

September 18, 2026

PLANS APPROVAL DATE

REGISTERED PROFESSIONAL ENGINEER Sean T. Penders No. C63744 Exp. 9-30-26 CIVIL STATE OF CALIFORNIA

THE STATE OF CALIFORNIA OR ITS OFFICERS OR AGENTS SHALL NOT BE RESPONSIBLE FOR THE ACCURACY OR COMPLETENESS OF SCANNED COPIES OF THIS PLAN SHEET.

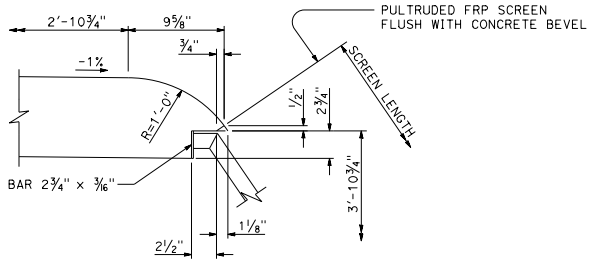

NOTCHED DETAIL

NOTES:

1. See Drainage Plans for additional details.
2. For Section B-B and C-C locations, see Standard Plan D139B.
3. Inlet and outlet piping opening sizes are shown on the Drainage Plans. The overflow and outlet piping shall be connected via standard elbows and tees.
4. For inlet and outlet pipe details not shown, see Drainage Plans.

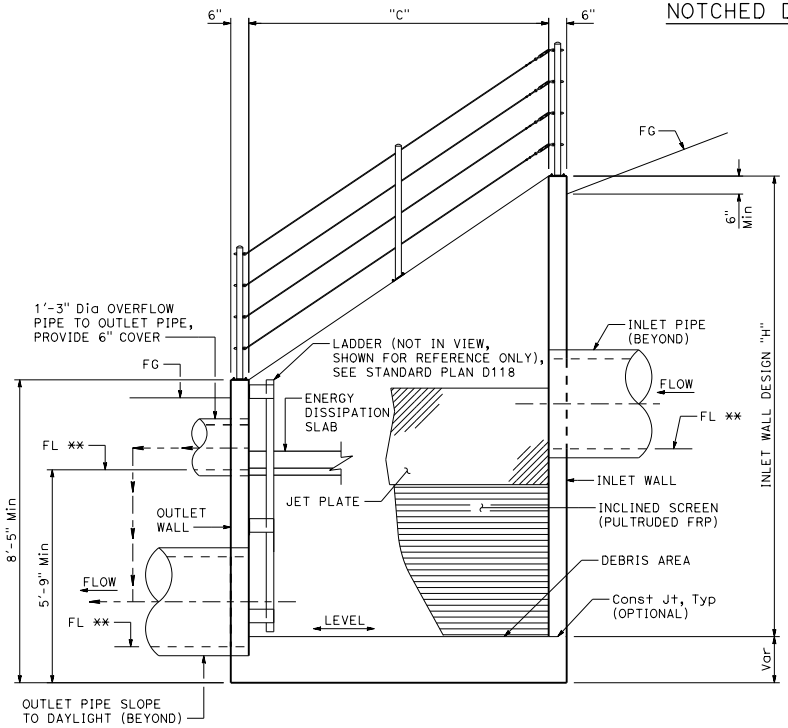

SECTION B-B

Flow deflectors not shown for clarity

** - FOR FL ELEVATIONS, SEE DRAINAGE PROFILES

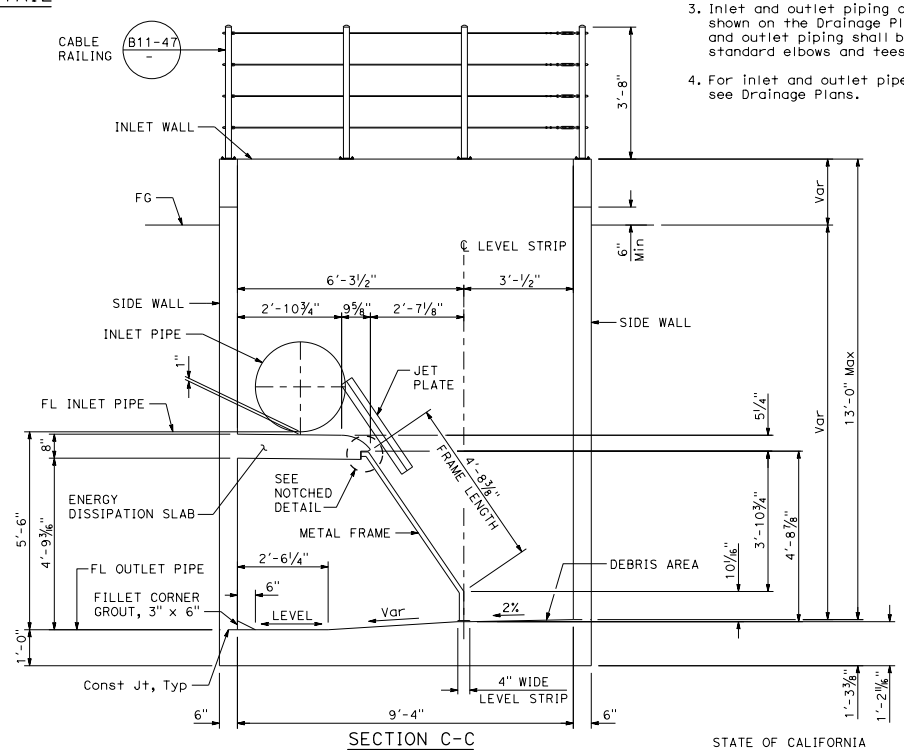

SECTION C-C

Flow deflectors not shown for clarity

STATE OF CALIFORNIA
DEPARTMENT OF TRANSPORTATION

GROSS SOLIDS REMOVAL DEVICE INCLINED SCREEN DETAILS No. 6 PULTRUDED FRP SCREEN

NO SCALE

D139G1

7-1-26

2026 STANDARD PLAN D139G1

Return to Table of Contents

Dist	COUNTY	ROUTE	POST MILES TOTAL PROJECT	SHEET No.	TOTAL SHEETS

REGISTERED CIVIL ENGINEER

September 18, 2026
PLANS APPROVAL DATE

REGISTERED PROFESSIONAL ENGINEER Sean T. Penders No. C63744 Exp. 9-30-26 CIVIL STATE OF CALIFORNIA

THE STATE OF CALIFORNIA OR ITS OFFICERS OR AGENTS SHALL NOT BE RESPONSIBLE FOR THE ACCURACY OR COMPLETENESS OF SCANNED COPIES OF THIS PLAN SHEET.

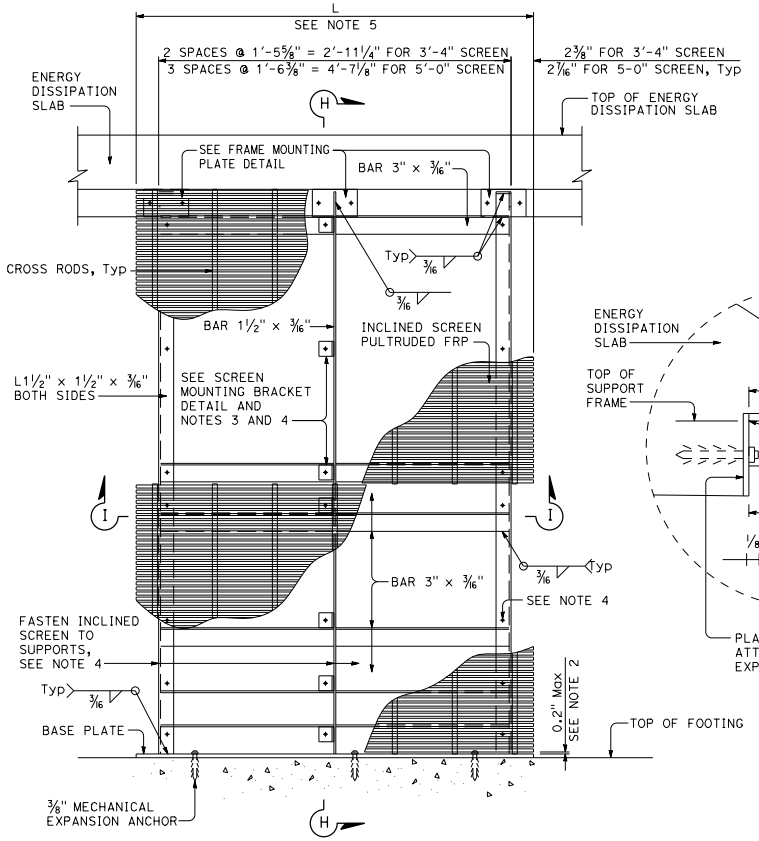

ELEVATION

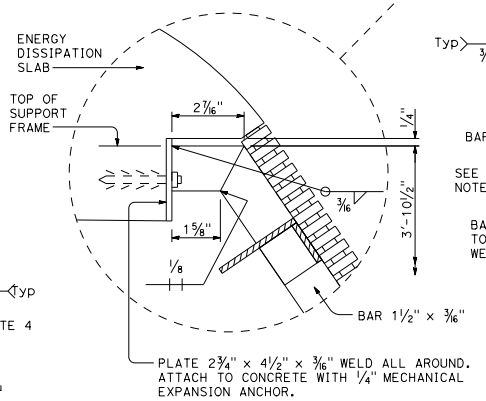

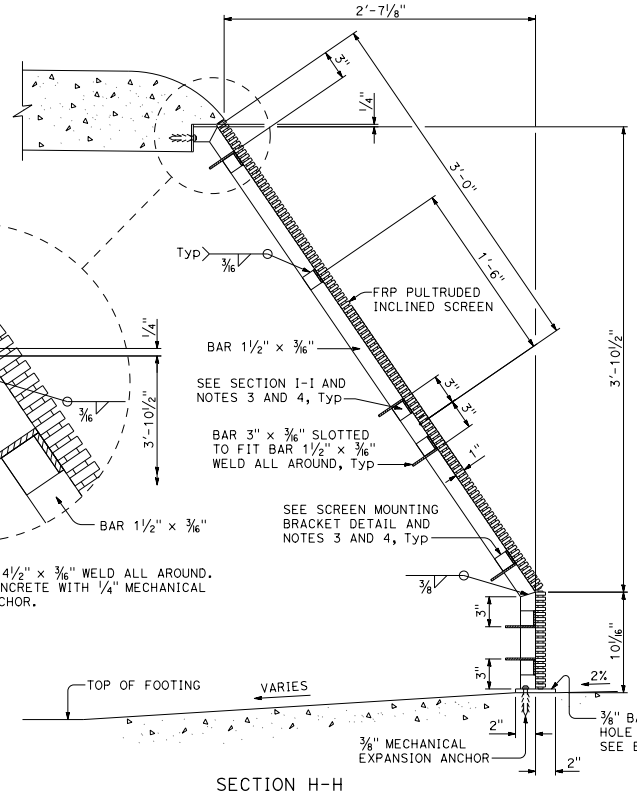

SECTION H-H

NOTES:

1. Reference Standard Plan D139D for Jet and Deflectors.
2. The dimension shown is the distance between top of plate and bottom of screen.
3. Weld L1½" x 1½" x ⅜" to metal frame.
4. Mount screen to metal frame using stainless steel tamper proof bolt/clip assembly. Field locate and drill 7⁄₃₂" ø hole in the support beam and screen mounting bracket to install the hold down clip assembly. Use a minimum of 9 clip assemblies for top 3' width FRP screen. Use 6 clip assemblies for FRP screens that are less than 3'. Adjust screen mounting bracket locations as needed. Place bracket in between tie rods.
5. Pultruded FRP screen length is:

TYPE	L (ft)
A	3'-3¾"
B	4'-11¾"
C	6'-7¾"
D	8'-3¾"
E	9'-11¾"
F	11'-7¾"

6. Use silicone at all edges of screen and concrete where gap is > 0.2".

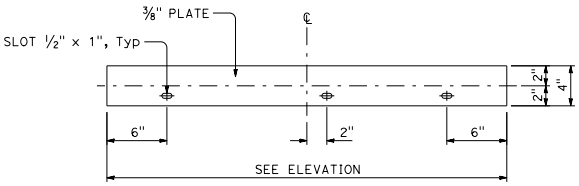

BASE PLATE

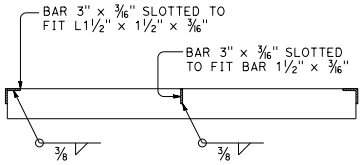

SECTION I-I

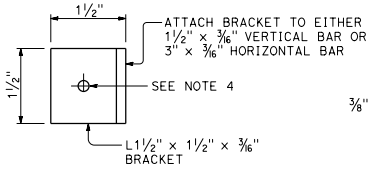

SCREEN MOUNTING BRACKET

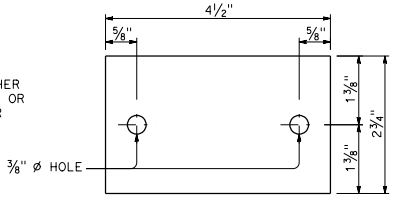

FRAME MOUNTING PLATE

STATE OF CALIFORNIA
DEPARTMENT OF TRANSPORTATION

GROSS SOLIDS REMOVAL DEVICE INCLINED SCREEN DETAILS No. 7 PULTRUDED FRP SCREEN

NO SCALE

D139G2

2026 STANDARD PLAN D139G2

7-1-26

Return to Table of Contents

Dist	COUNTY	ROUTE	POST MILES TOTAL PROJECT	SHEET No.	TOTAL SHEETS

REGISTERED CIVIL ENGINEER

September 18, 2026

PLANS APPROVAL DATE

REGISTERED PROFESSIONAL ENGINEER Sean T. Penders No. C63744 Exp. 9-30-26 CIVIL STATE OF CALIFORNIA

THE STATE OF CALIFORNIA OR ITS OFFICERS OR AGENTS SHALL NOT BE RESPONSIBLE FOR THE ACCURACY OR COMPLETENESS OF SCANNED COPIES OF THIS PLAN SHEET.

GENERAL NOTES

Designation:
Types of Gross Solids Removal Devices (GSRDs) are Linear Radial (LR) and Inclined Screen. The Linear Radial has either a standard or high velocity configuration noted as Linear Radial or Linear Radial (HV). All GSRD BMP Detail Drawings are applicable for velocities up to 20 fps.

Special Reinforcement Coverage:
GSRD BMP Detail Drawings are not to be used in a corrosive environment or where there is a severe abrasive flow condition or in freeze-thaw locations.

Special Design:
Required for ground water conditions above bottom of GSRD, surcharge loads exceeding HS20 truck load, design bearing pressures or sizes greater than those on this plan.

Traffic Loading:
No traffic load is allowed over GSRDs. As determined by the Engineer, barriers or MBGR shall be provided between GSRDs and traffic lanes.

LINEAR RADIAL DESIGN CHART

GSRD TYPE	TOTAL SCREENED PIPE LENGTH "T_S"	FLOW RATE (cfs)	INSIDE LENGTH "L"	HIGH VELOCITY INSIDE LENGTH "L_{HV}" *	No. OF INTERMEDIATE SCREENED PIPES
LR-1	5′-6"	3.54	11′-11"	14′-3¾"	0
LR-2	10′-6"	7.07	16′-11"	19′-3¾"	1
LR-3	15′-6"	10.96	21′-11"	24′-3¾"	2
LR-4	20′-6"	14.49	26′-11"	29′-3¾"	3
LR-5	25′-6"	18.38	31′-11"	34′-3¾"	4
LR-6	30′-6"	21.91	36′-11"	39′-3¾"	5

* High velocity is achieved when inlet Velocity exceeds 8.2 fps.

NOTES:

1. The total screened pipe length "T_S" is the sum of the end screened and intermediate screened pipes. For dimension "T_S" and location of end screened pipe and intermediate screened pipes, see Standard Plan D140B.
2. Example of Linear Radial nomenclature is LR-1 (6′-0"); for high velocity type LR(HV)-3 (3′-0"). The wall height is the number represented in the parentheses.
3. The inside length "L" is shown on Standard Plan D140B, see plan view. Likewise, the inside length "L_{HV}" is shown on Standard Plan D140G, see plan view.

DESIGN NOTES

Specifications:
Design:
Bridge Design Specification April 2000 (LFD)
(1996 AASHTO) with interims and revisions by Caltrans

Wall (LFD) : 1.5 D + 1.5 E and 1.5 D + W
Footing (LFD) : 1.5 D + 1.5 E
Where: D = Dead Load
E = Earth Load
Capacity reduction factor is included.

Earth Load:
125 lb/ft^3 vertical,

Water Load:
62.4 lb/ft^3 horizontal,

Equivalent Fluid Pressure =
100 lb/ft^3 horizontal (Case I).

Earth pressure for 2:1 unlimited slope determined from Rankine's formula with ø = 33°42′ (Case II).

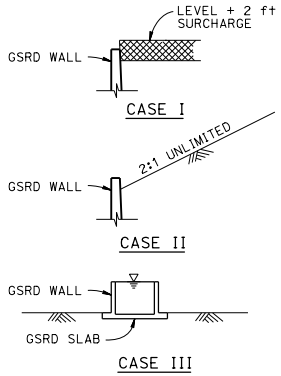

DETAIL OF DESIGN LOADING CASES

CASE I Level + 2′-0" surcharge, GSRD empty
CASE II 2:1 Unlimited slope, GSRD empty
CASE III GSRD full of water, no soil pressure

Grating (LL) Load :
0.5 psi

Unit Stresses:
f'_c = 3.6 ksi
f_y = 60 ksi (bar reinforcing)

Design Soil Bearing Pressure (Service Load) = 20 psi

ABBREVIATIONS

cfs	CUBIC FEET PER SECOND
fps	FEET PER SECOND
GSRD	GROSS SOLIDS REMOVAL DEVICE
HV	HIGH VELOCITY
LL	LIVE LOAD
LR	LINEAR RADIAL

LEGEND

DESIGN WATER DEPTH

STANDARD PLAN SHEET No.

DETAIL No.

NOTES:

Expansion joints:
Inverts - No expansion joints shall be permitted.
Walls - Place ½" expansion joint filler vertically at 26′-0" centers with strip water stop (B0-1 / 1-3).

Construction Joints:
Construction joints may be permitted if normal (or radial) to ℄ of GSRD.

Backfill:
See Standard Specifications, except the difference in backfill shall not exceed 4 ft between side walls and shall not exceed the lesser of wall height "H" or 4 ft between inlet and outlet walls.

Earthwork:
Excavation and Backfill with Cut and Exposed conditions:

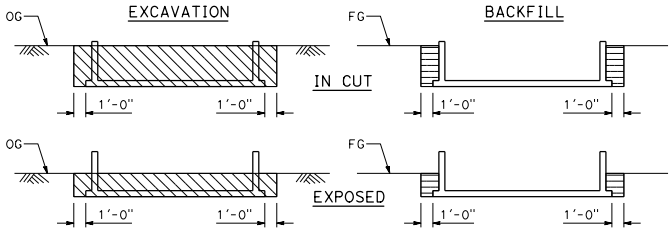

LINEAR RADIAL

LEGEND

STRUCTURE EXCAVATION

STRUCTURE BACKFILL
90% RELATIVE COMPACTION

NOTES:

1. Slope or shore excavation sides as necessary.
2. Dimensions shown are minimum.

STATE OF CALIFORNIA
DEPARTMENT OF TRANSPORTATION

GROSS SOLIDS REMOVAL DEVICE LINEAR RADIAL LEGEND

NO SCALE

D140A

7-1-26

2026 STANDARD PLAN D140A

Return to Table of Contents

Dist	COUNTY	ROUTE	POST MILES TOTAL PROJECT	SHEET No.	TOTAL SHEETS

REGISTERED CIVIL ENGINEER

September 18, 2026

PLANS APPROVAL DATE

REGISTERED PROFESSIONAL ENGINEER Sean T. Penders No. C63744 Exp. 9-30-26 CIVIL STATE OF CALIFORNIA

THE STATE OF CALIFORNIA OR ITS OFFICERS OR AGENTS SHALL NOT BE RESPONSIBLE FOR THE ACCURACY OR COMPLETENESS OF SCANNED COPIES OF THIS PLAN SHEET.

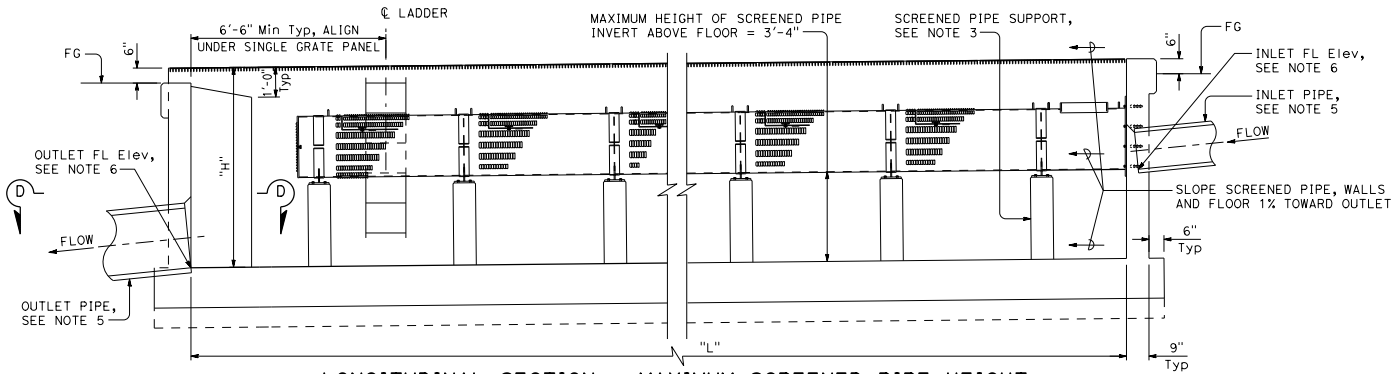

LONGITUDINAL SECTION - MAXIMUM SCREENED PIPE HEIGHT

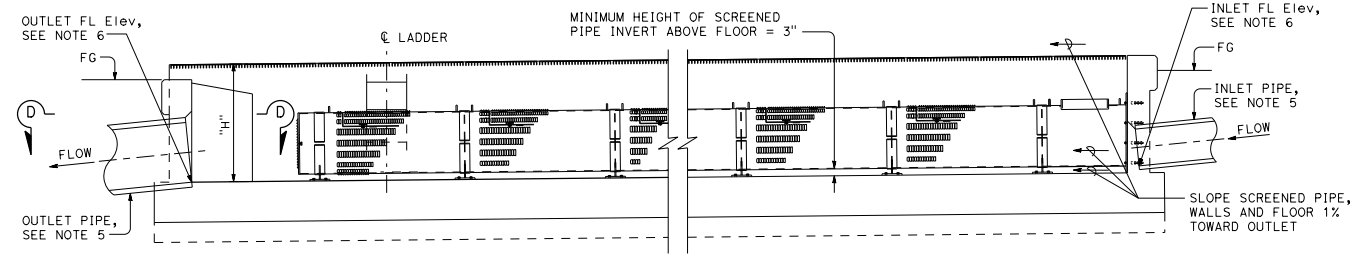

LONGITUDINAL SECTION - MINIMUM SCREENED PIPE HEIGHT

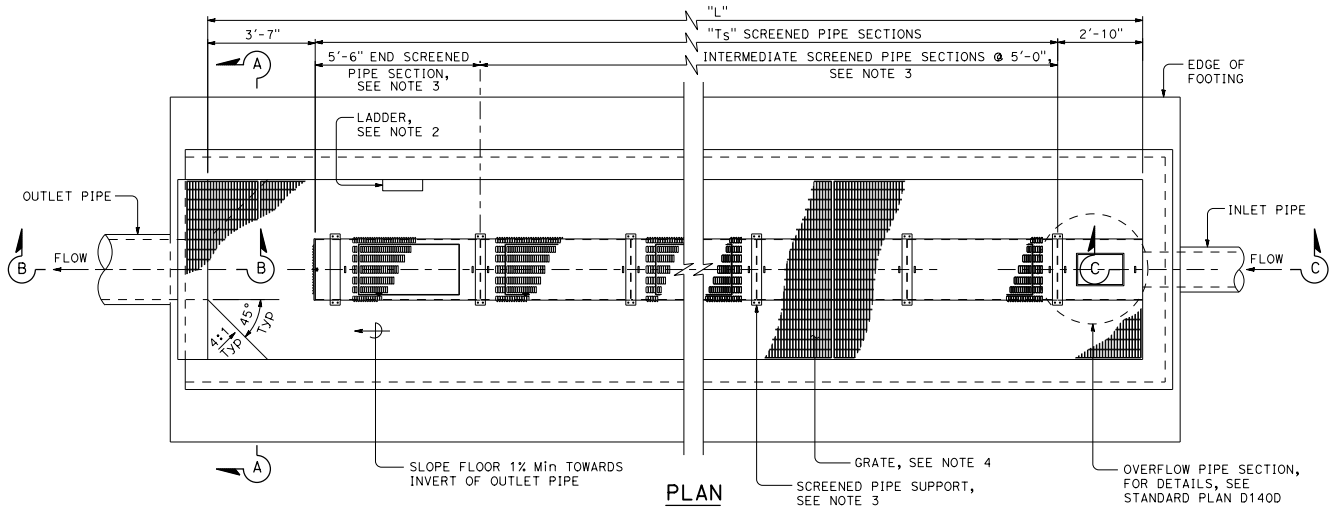

PLAN

NOTES (THIS SHEET ONLY):

1. For Sections A-A, B-B, C-C and D-D, see Standard Plan D140C.
2. For ladder details, see Standard Plan D118.
3. For end and intermediate screened pipe details, see Standard Plan D140E.
4. For grate details, see Standard Plan D140F.
5. For layout of inlet and outlet pipes, see Drainage Plans.
6. For FL elevation of inlet and outlet pipes, see Drainage Profiles.
7. For dimension "L", "Ts" and other design data, see Design Chart on Standard Plan D140A.
8. For dimension "H", see Standard Plan D140C.

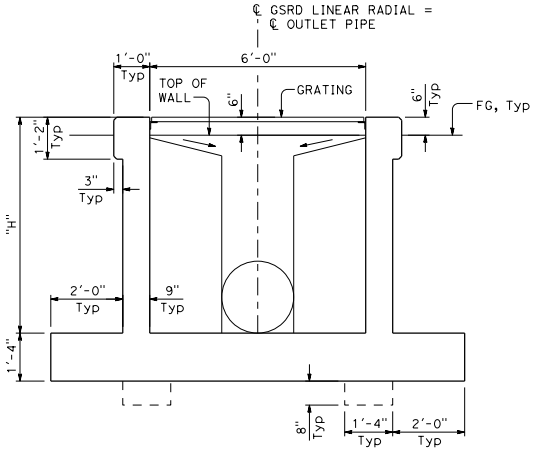

TYPICAL SECTION

STATE OF CALIFORNIA
DEPARTMENT OF TRANSPORTATION

GROSS SOLIDS REMOVAL DEVICE LINEAR RADIAL LAYOUT

NO SCALE

D140B

7-1-26

2026 STANDARD PLAN D140B

Return to Table of Contents

Dist	COUNTY	ROUTE	POST MILES TOTAL PROJECT	SHEET No.	TOTAL SHEETS

REGISTERED CIVIL ENGINEER

September 18, 2026

PLANS APPROVAL DATE

REGISTERED PROFESSIONAL ENGINEER Sean T. Penders No. C63744 Exp. 9-30-26 CIVIL STATE OF CALIFORNIA

THE STATE OF CALIFORNIA OR ITS OFFICERS OR AGENTS SHALL NOT BE RESPONSIBLE FOR THE ACCURACY OR COMPLETENESS OF SCANNED COPIES OF THIS PLAN SHEET.

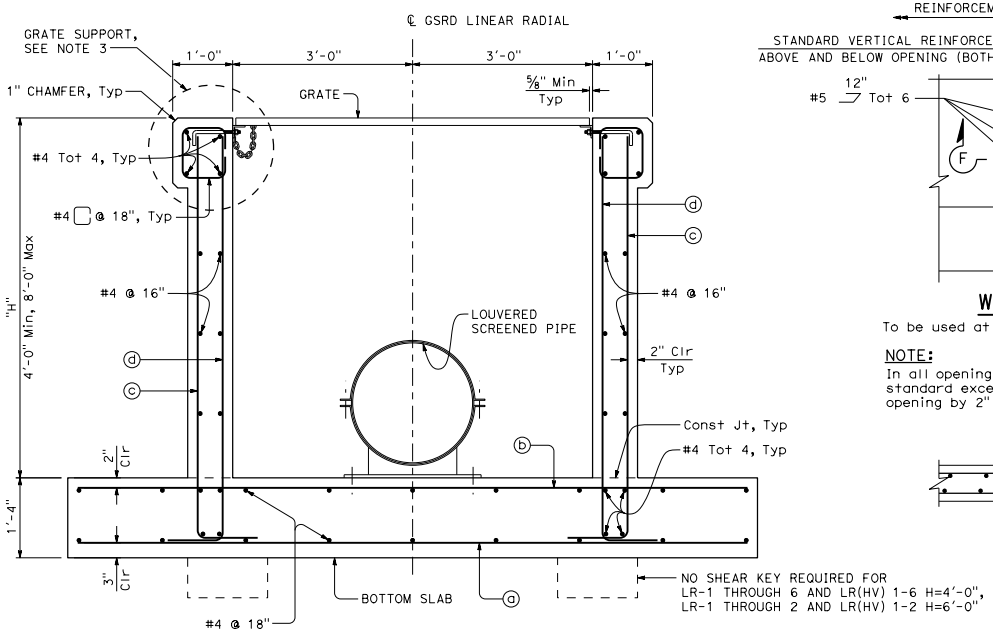

SECTION A-A

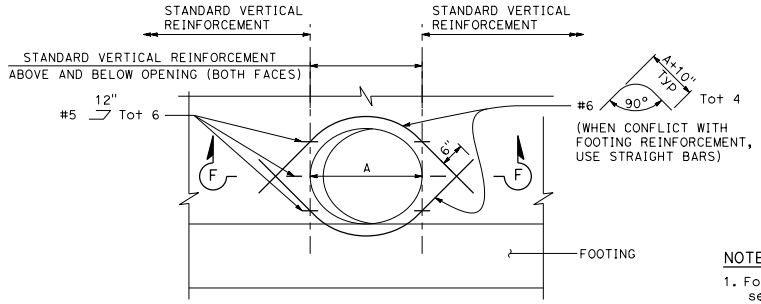

WALL OPENING DETAILS

To be used at Linear Radial inlet and outlet pipe locations

NOTE:

In all opening locations, horizontal reinforcement to be standard except as shown. All reinforcement to clear opening by 2" minimum.

NOTES (THIS SHEET ONLY):

1. For location of Sections A-A, B-B, C-C, and D-D, see Standard Plan D140B.
2. For invert elevation differential between inlet and outlet, see Drainage Profile sheets.
3. For grate support details, see Standard Plan D140F.

REINFORCING STEEL AND DATA FOR WALLS			
DESIGN "H"	4'-0"	6'-0"	8'-0"
ⓓ BARS	#4 @ 18"	#5 @ 12"	#5 @ 8"
ⓑ BARS	#4 @ 18"	#4 @ 18"	#5 @ 16"
ⓒ BARS ⌊	#5 @ 14"	#5 @ 9"	#5 @ 4"
ⓓ BARS ⌋	#5 @ 14"	#5 @ 14"	#5 @ 12"

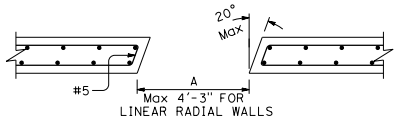

SECTION F-F

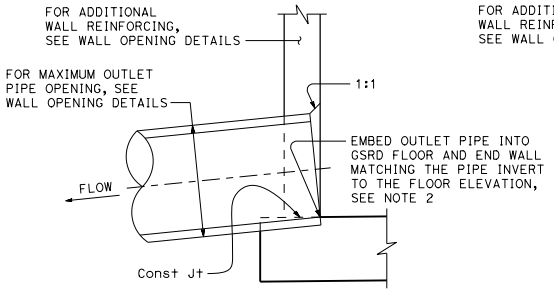

SECTION B-B

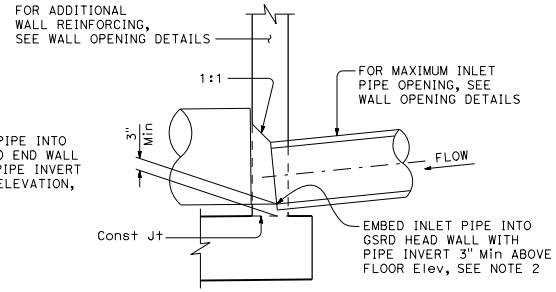

SECTION C-C

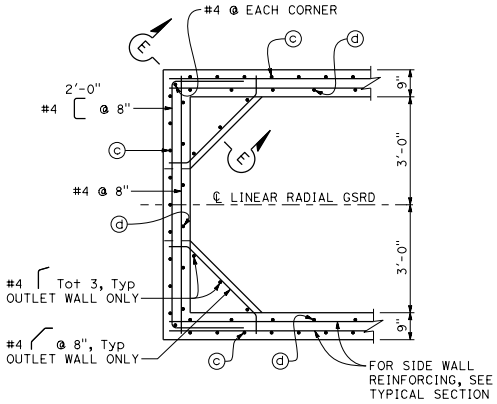

SECTION D-D

Outlet wall shown, inlet wall similar.

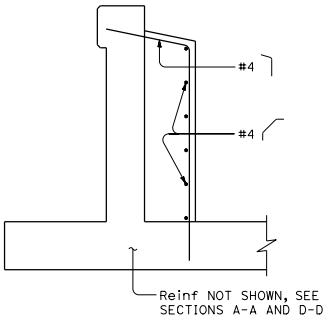

SECTION E-E

Outlet end only

STATE OF CALIFORNIA
DEPARTMENT OF TRANSPORTATION

GROSS SOLIDS REMOVAL DEVICE LINEAR RADIAL DETAILS

NO SCALE

D140C

7-1-26

Return to Table of Contents

Dist	COUNTY	ROUTE	POST MILES TOTAL PROJECT	SHEET No.	TOTAL SHEETS

REGISTERED CIVIL ENGINEER

September 18, 2026

PLANS APPROVAL DATE

REGISTERED PROFESSIONAL ENGINEER Sean T. Penders No. C63744 Exp. 9-30-26 CIVIL STATE OF CALIFORNIA

THE STATE OF CALIFORNIA OR ITS OFFICERS OR AGENTS SHALL NOT BE RESPONSIBLE FOR THE ACCURACY OR COMPLETENESS OF SCANNED COPIES OF THIS PLAN SHEET.

NOTE (THIS SHEET ONLY):

1. All metal components of screen pipe including connections to concrete must be stainless steel.

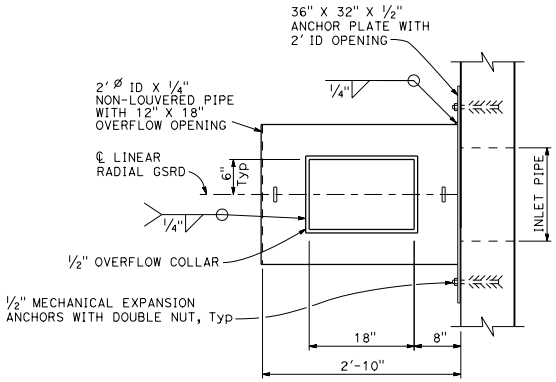

TOP VIEW

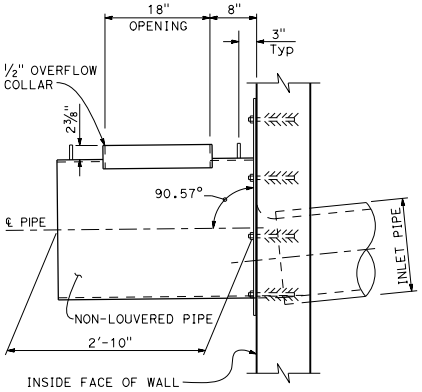

SIDE VIEW

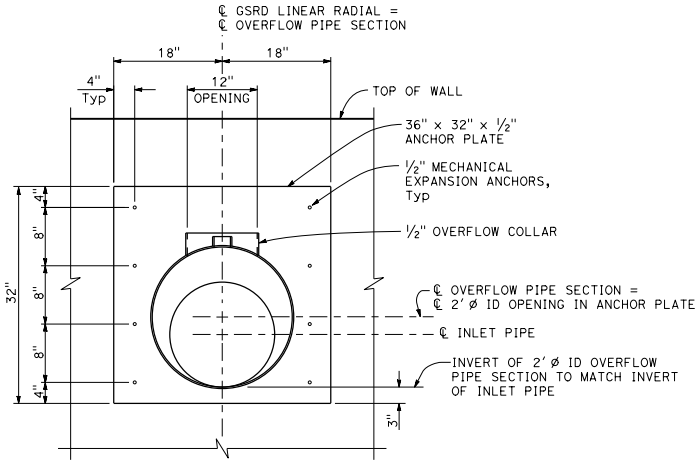

END VIEW

OVERFLOW PIPE AND ANCHOR PLATE DETAILS

STATE OF CALIFORNIA
DEPARTMENT OF TRANSPORTATION

GROSS SOLIDS REMOVAL DEVICE
LINEAR RADIAL OVERFLOW PIPE DETAILS

NO SCALE

D140D

7-1-26

2026 STANDARD PLAN D140D

Return to Table of Contents

Dist	COUNTY	ROUTE	POST MILES TOTAL PROJECT	SHEET No.	TOTAL SHEETS

REGISTERED CIVIL ENGINEER

September 18, 2026
PLANS APPROVAL DATE

REGISTERED PROFESSIONAL ENGINEER Sean T. Penders No. C63744 Exp. 9-30-26 CIVIL STATE OF CALIFORNIA

THE STATE OF CALIFORNIA OR ITS OFFICERS OR AGENTS SHALL NOT BE RESPONSIBLE FOR THE ACCURACY OR COMPLETENESS OF SCANNED COPIES OF THIS PLAN SHEET.

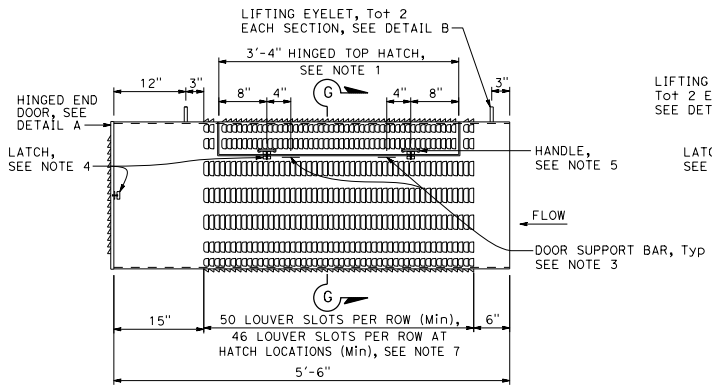

END SCREENED PIPE

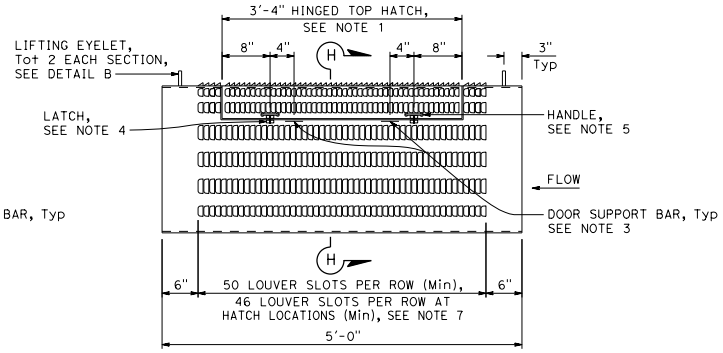

INTERMEDIATE SCREENED PIPE

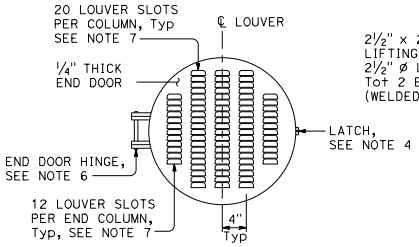

DETAIL A

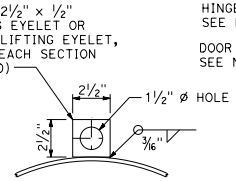

DETAIL B

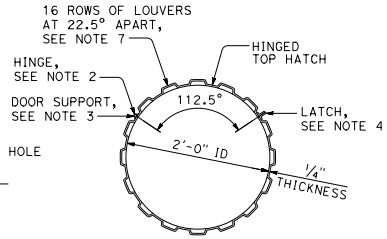

SECTION G-G

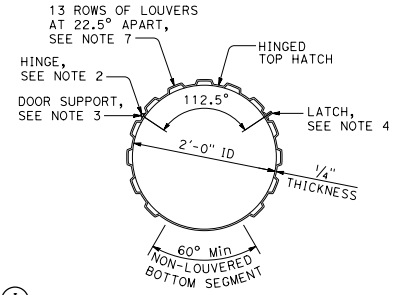

SECTION H-H

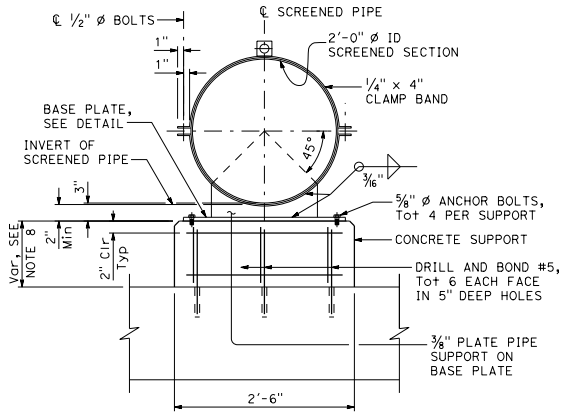

SECTION I-I

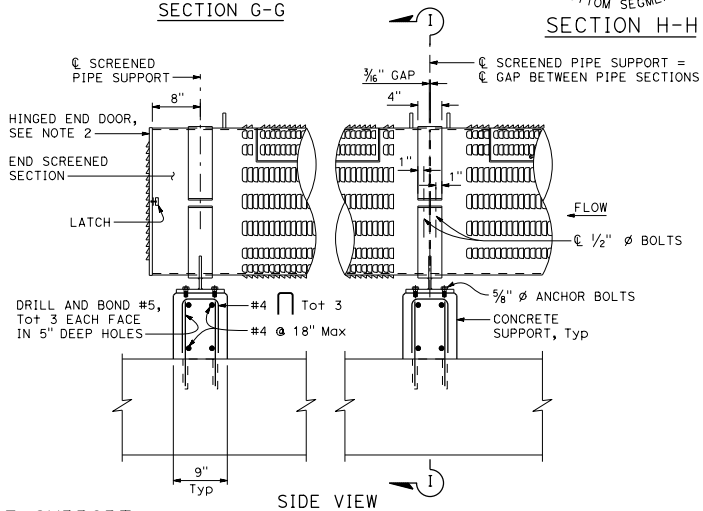

SIDE VIEW

SCREENED PIPE SUPPORT

NOTES (THIS SHEET ONLY):

1. Provide 1" x 3/16" stainless steel bar at all cut edges to provide a seat and support for all doors when closed.
2. Provide stainless steel ¼" thick heavy duty hinges 4" x 4" thick with ⅝" ø pin. Use fillet weld at cover and frame. Total 2 each door, evenly spaced.
3. Attach 2 - 1" x 1" x 3" stainless steel bars (or fabricator equivalent design) to support doors when in an open position. Mechanical stops can be welded on hinges.
4. Provide latch. Latch must have threaded U-bolt for adjustment. Latch to have ⅜" total adjustability and 1 3/16" drawing movement and be rated at 360 LB.
5. Provide stainless steel handles at locations indicated.
6. End door to be secured to end screen with ⅜" ø x 10" continuous bolt with lock nut through flat bars.
7. The aperture size of each louver slot must be 3/16" wide x 2½" long. Louver slot apertures must meet the following requirements:

Width:	% of Total
0.189" - 0.200"	90
0.181" - 0.200"	95
0.169" - 0.200"	100

Length:	% of Total
2.250" - 2.750"	90
2.000" - 3.000"	100

8. When invert height above floor is under 7", use anchor bolts to mount the plate pipe support base to the floor. Otherwise, use with concrete supports if height is between 7" to 10" with single layer reinforcement. When height is over 10", use 2 layers of reinforcement.

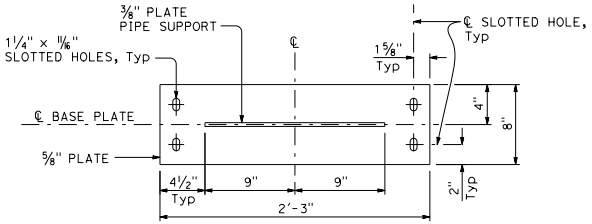

BASE PLATE DETAIL

STATE OF CALIFORNIA
DEPARTMENT OF TRANSPORTATION

GROSS SOLIDS REMOVAL DEVICE LINEAR RADIAL SCREENED PIPE DETAILS

NO SCALE

D140E

2026 STANDARD PLAN D140E

7-1-26

Return to Table of Contents

Dist	COUNTY	ROUTE	POST MILES TOTAL PROJECT	SHEET No.	TOTAL SHEETS

REGISTERED CIVIL ENGINEER

September 18, 2026
PLANS APPROVAL DATE

REGISTERED PROFESSIONAL ENGINEER Sean T. Penders No. C63744 Exp. 9-30-26 CIVIL STATE OF CALIFORNIA

THE STATE OF CALIFORNIA OR ITS OFFICERS OR AGENTS SHALL NOT BE RESPONSIBLE FOR THE ACCURACY OR COMPLETENESS OF SCANNED COPIES OF THIS PLAN SHEET.

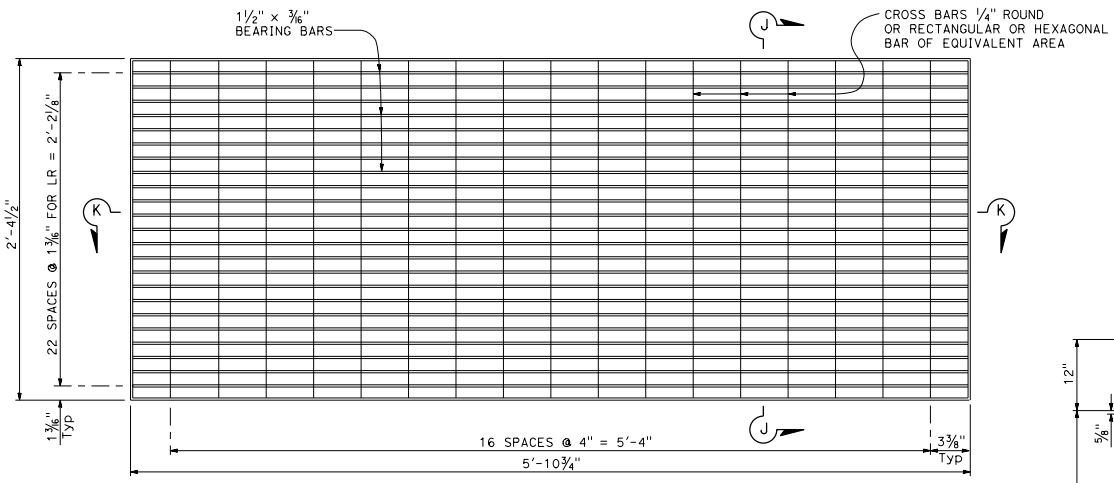

GRATE PANEL

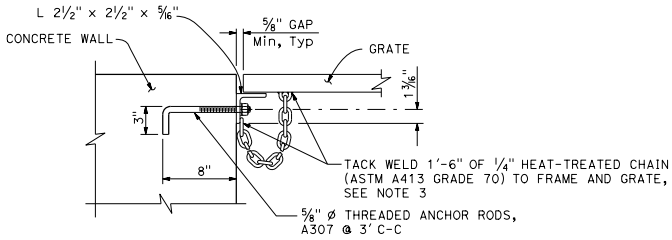

GRATE SUPPORT

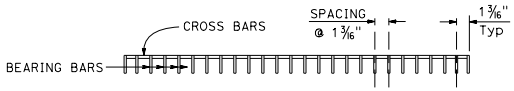

SECTION J-J

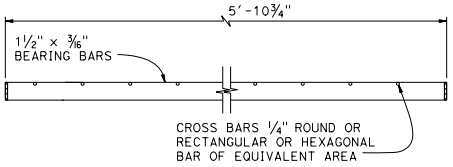

SECTION K-K

NOTE: CROSS BARS MAYBE FILLET WELDED, RESISTANCE WELDED OR ELECTROFORGED TO BEARING BARS.

No. OF INTERMEDIATE SCREENED PIPES	LR No. OF GRATES	LR(HV) No. OF GRATES
0	5	6
1	7	8
2	9	10
3	11	12
4	13	14
5	15	16

NOTES (THIS SHEET ONLY):

1. Gap between grate panels is 1".
2. All metal components of grating including connections to wall must be galvanized.
3. Attach "heat-treated chain" per grate on wall opposite of service ladder, see "Grate Support Detail" this sheet.

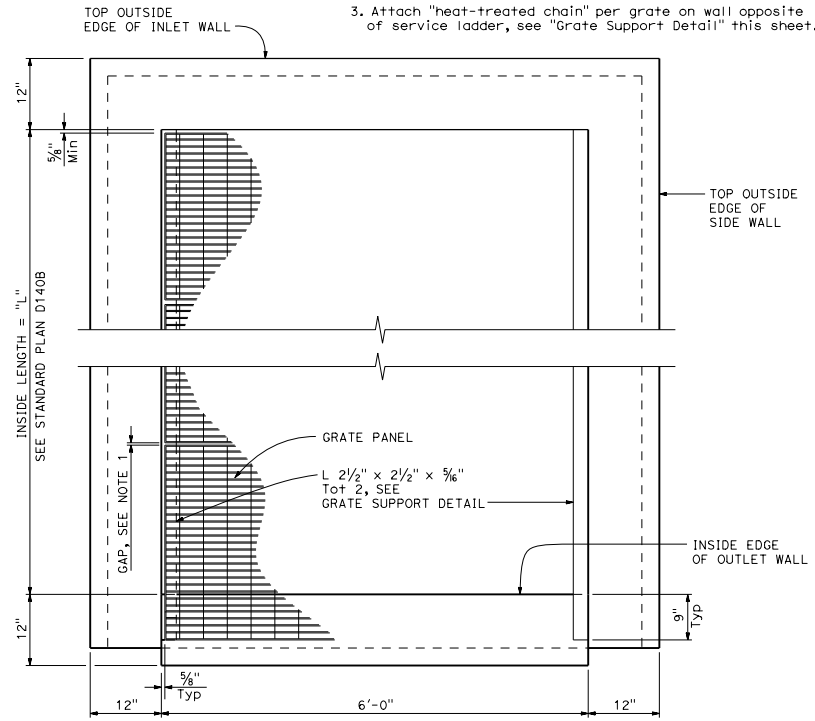

GRATE LAYOUT

STATE OF CALIFORNIA
DEPARTMENT OF TRANSPORTATION

GROSS SOLIDS REMOVAL DEVICE
LINEAR RADIAL GRATE PANEL DETAILS

NO SCALE

D140F

2026 STANDARD PLAN D140F

7-1-26

Return to Table of Contents

Dist	COUNTY	ROUTE	POST MILES TOTAL PROJECT	SHEET No.	TOTAL SHEETS

REGISTERED CIVIL ENGINEER

September 18, 2026

PLANS APPROVAL DATE

REGISTERED PROFESSIONAL ENGINEER Sean T. Penders No. C63744 Exp. 9-30-26 CIVIL STATE OF CALIFORNIA

THE STATE OF CALIFORNIA OR ITS OFFICERS OR AGENTS SHALL NOT BE RESPONSIBLE FOR THE ACCURACY OR COMPLETENESS OF SCANNED COPIES OF THIS PLAN SHEET.

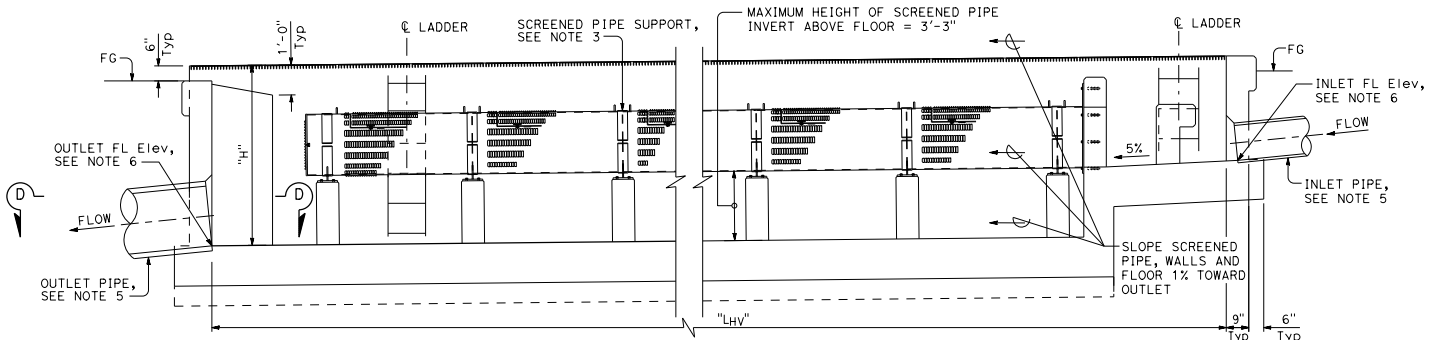

LONGITUDINAL SECTION - MAXIMUM SCREENED PIPE HEIGHT

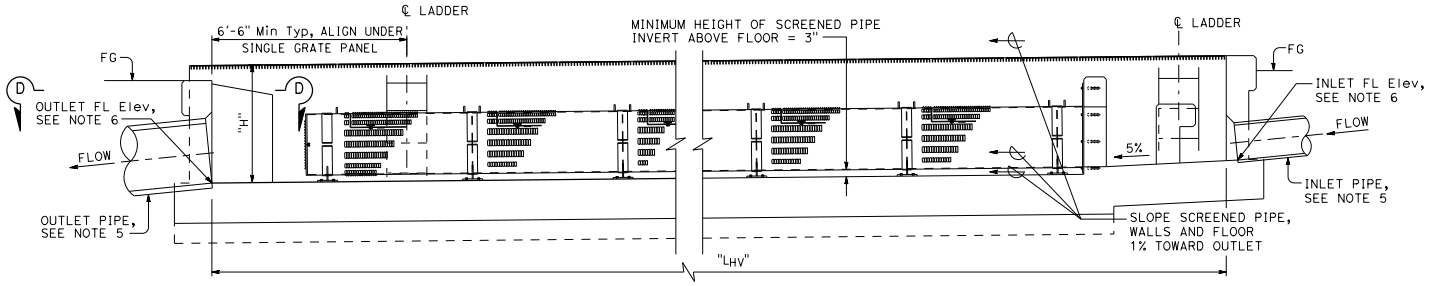

LONGITUDINAL SECTION - MINIMUM SCREENED PIPE HEIGHT

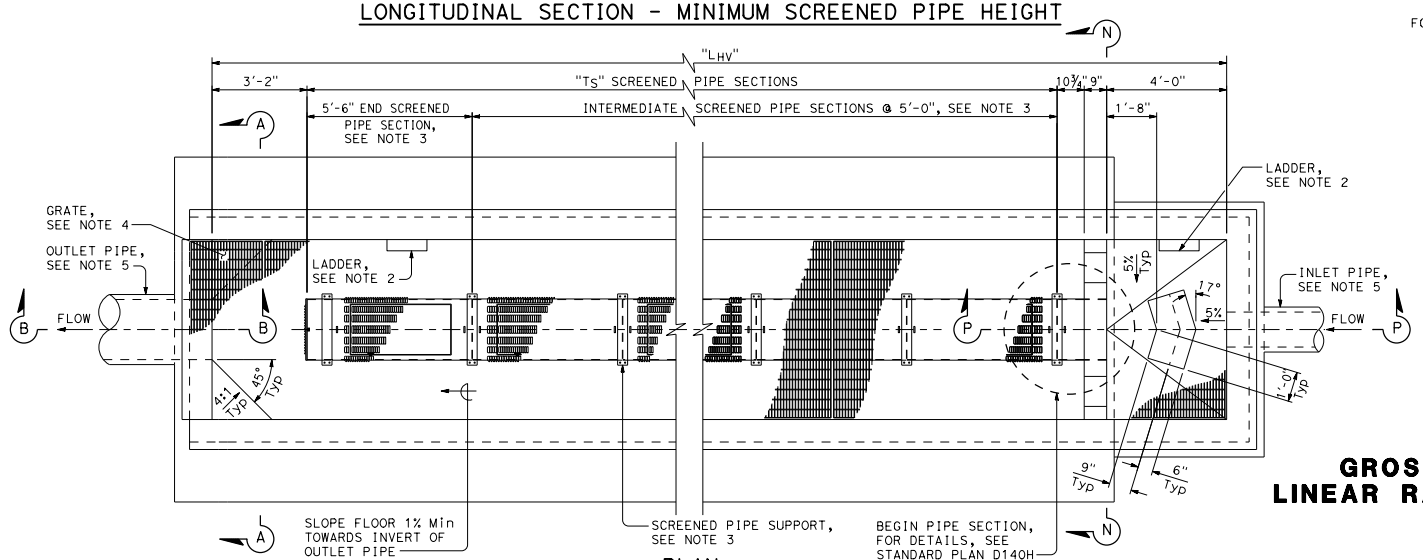

PLAN

NOTES (THIS SHEET ONLY):

1. For Sections A-A, B-B, and D-D, see Standard Plan D140C.
2. For ladder details, see Standard Plan D118.
3. For end and intermediate screened pipe details, see Standard Plan D140E.
4. For grate details, see Standard Plan D140F.
5. For layout of inlet and outlet pipes, see Drainage Plans.
6. For FL elevations of inlet and outlet pipes, see Drainage Profiles.
7. For dimensions "L_{HV}", "T_S", and other design data, see Design Chart on Standard Plan D140A.
8. For dimension "H", see Standard Plan D140C.
9. For Sections N-N and P-P, see Standard Plan D140H.

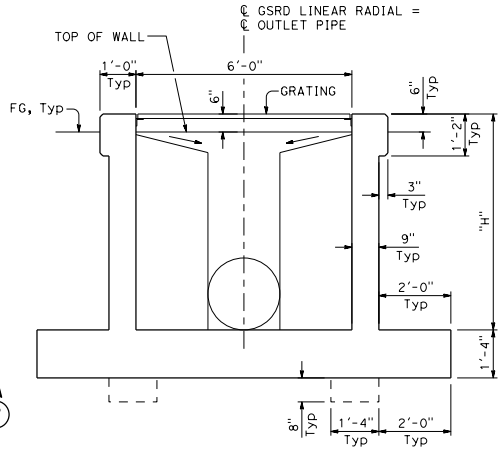

TYPICAL SECTION

STATE OF CALIFORNIA
DEPARTMENT OF TRANSPORTATION

GROSS SOLIDS REMOVAL DEVICE LINEAR RADIAL (HIGH VELOCITY) LAYOUT

NO SCALE

D140G

2026 STANDARD PLAN D140G

7-1-26

Return to Table of Contents

Dist	COUNTY	ROUTE	POST MILES TOTAL PROJECT	SHEET No.	TOTAL SHEETS

REGISTERED CIVIL ENGINEER

September 18, 2026
PLANS APPROVAL DATE

REGISTERED PROFESSIONAL ENGINEER Sean T. Penders No. C63744 Exp. 9-30-26 CIVIL STATE OF CALIFORNIA

THE STATE OF CALIFORNIA OR ITS OFFICERS OR AGENTS SHALL NOT BE RESPONSIBLE FOR THE ACCURACY OR COMPLETENESS OF SCANNED COPIES OF THIS PLAN SHEET.

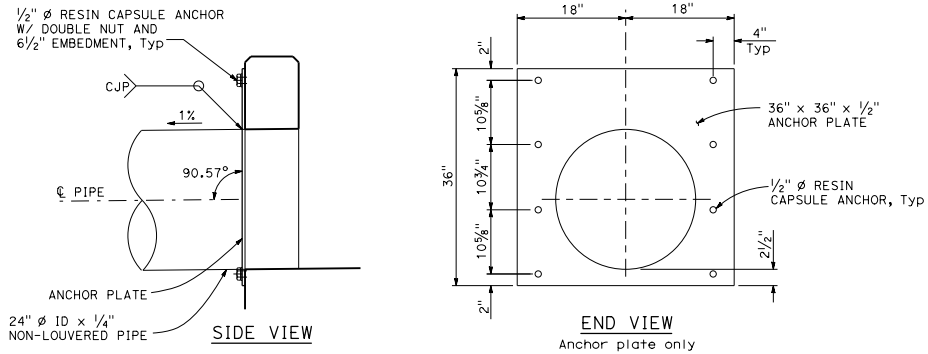

ANCHOR PLATE DETAILS

NOTES:

1. For location of Sections N-N and P-P, see Standard Plan D140G.
2. For Grate Support Details, see Standard Plan D140F.
3. For bottom slab details not shown, see Section A-A on Standard Plan D140C.

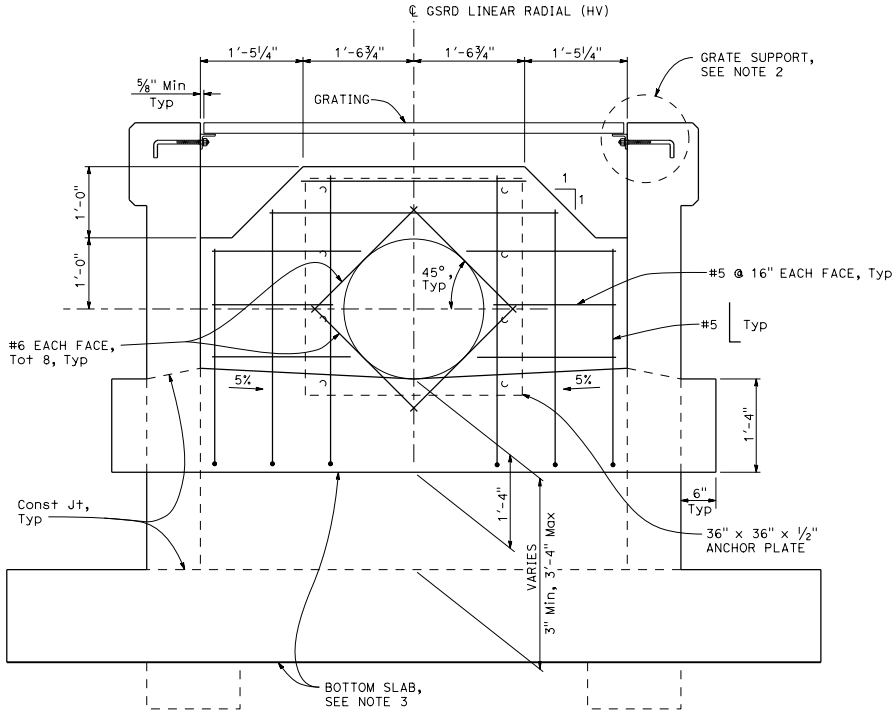

SECTION N-N

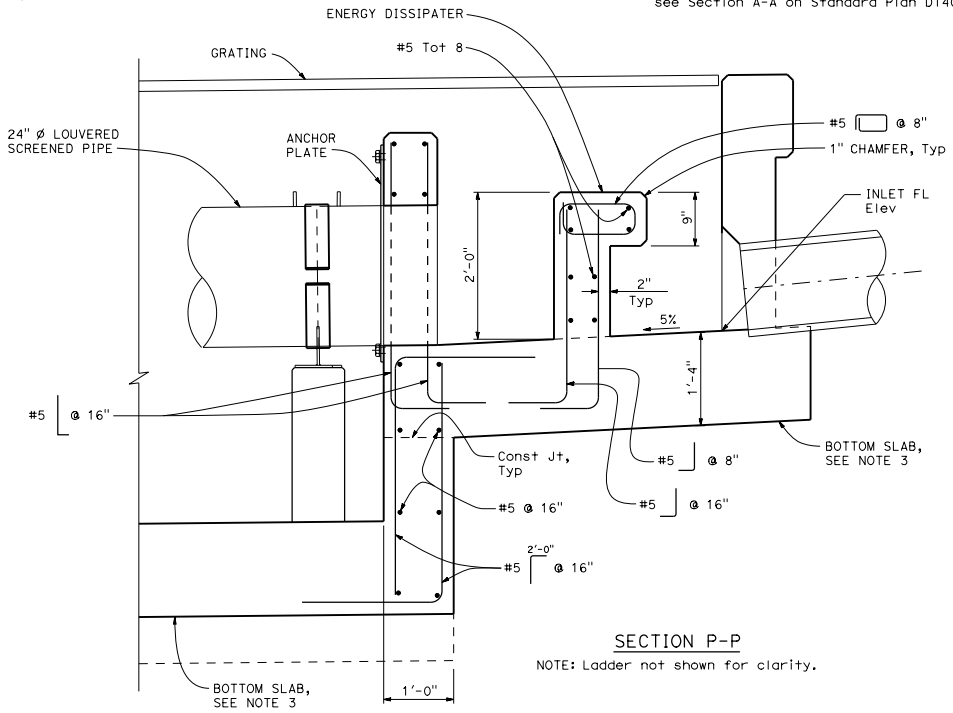

SECTION P-P

NOTE: Ladder not shown for clarity.

STATE OF CALIFORNIA
DEPARTMENT OF TRANSPORTATION

GROSS SOLIDS REMOVAL DEVICE LINEAR RADIAL (HIGH VELOCITY) DETAILS

NO SCALE

D140H

7-1-26

2026 STANDARD PLAN D140H

Return to Table of Contents

EXISTING	NEW	ITEM DESCRIPTION
		WATER METER (WM)
		BACKFLOW PREVENTER ASSEMBLY (BPA)
		BACKFLOW PREVENTER ENCLOSURE (BPE)
		BOOSTER PUMP (BP)
		TRUCK LOADING STANDPIPE (TLS)
FS	FS	FLOW SENSOR (FS)
		MASTER IRRIGATION CONTROLLER (MIC)
		AUXILIARY IRRIGATION CONTROLLER (AIC)
		IRRIGATION CONTROLLER (IC) IRRIGATION CONTROLLER (IC) (BATTERY) IRRIGATION CONTROLLER (IC) (SOLAR) IRRIGATION CONTROLLER (IC) (TWO WIRE)
		IRRIGATION CONTROLLER(S) IN CONTROLLER ENCLOSURE CABINET (ICC)
acc	ACC	ARMOR-CLAD CONDUCTORS (ACC)
		CONTROL AND NEUTRAL CONDUCTORS (CNC)
		IRRIGATION CONDUIT
		IRRIGATION SLEEVE
dip	DIP	DUCTILE IRON PIPE (SUPPLY LINE) (MAIN) (DIP)
		GALVANIZED STEEL PIPE (SUPPLY LINE) (MAIN) (GSP)
		GALVANIZED STEEL PIPE (SUPPLY LINE) (LATERAL) (GSP)
		PLASTIC PIPE (SUPPLY LINE) (MAIN)
		PLASTIC PIPE (SUPPLY LINE) (LATERAL)
cp	CP	COPPER PIPE (SUPPLY LINE)
dit	DIT	DRIP IRRIGATION TUBING
		REMOTE CONTROL VALVE (RCV) REMOTE CONTROL VALVE (MASTER) (RCVM) REMOTE CONTROL VALVE (MASTER) W/FLOW METER (RCVMF)
		REMOTE CONTROL VALVE W/PRESSURE REGULATOR (RCVP)
		EXISTING MANUAL CONTROL VALVE (MCV)
		DRIP VALVE ASSEMBLY (DVA)
		WYE STRAINER ASSEMBLY (WSA)

EXISTING	NEW	ITEM DESCRIPTION
		GATE VALVE (GV)
		BALL VALVE (BV)
		QUICK COUPLING VALVE (QCV)
		CAM COUPLER ASSEMBLY (CCA)
		GARDEN VALVE ASSEMBLY (GARVA)
		PRESSURE REGULATING VALVE (PRV)
		PRESSURE RELIEF VALVE (PRLV)
		FLOW CONTROL VALVE (FCV)
		COMBINATION AIR RELEASE VALVE (CARV)
		CHECK VALVE (CV)
		FLUSH VALVE (FV)
		EXISTING NOZZLE LINE W/TURNING UNION
		EXISTING IRRIGATION SYSTEM
		EXISTING IRRIGATION SYSTEM TO BE REMOVED
		CHAIN LINK GATE
		QUICK COUPLING VALVE W/SPRINKLER PROTECTOR
3	3	SPRINKLER W/SPRINKLER PROTECTOR
		CONNECT TO EXISTING SYSTEM
		CAP
		CAP EXISTING
	FR	FIBER ROLL
	CS	COMPOST SOCK

RCV SIZE
IRRIGATION CONTROLLER
CONTROLLER STATION
VALVE IN PARALLEL (IF APPLICABLE)
GPM
QUANTITY OF SPRINKLERS (WHEN SHOWN)

* 2½"-A-2b-40-60

VALVE CODE

* VALVE CODES FOR EXISTING VALVES ARE SHOWN IN A DASHED ENCLOSURE.

Dist	COUNTY	ROUTE	POST MILES TOTAL PROJECT	SHEET No.	TOTAL SHEETS

LICENSED LANDSCAPE ARCHITECT

September 18, 2026
PLANS APPROVAL DATE

THE STATE OF CALIFORNIA OR ITS OFFICERS OR AGENTS SHALL NOT BE RESPONSIBLE FOR THE ACCURACY OR COMPLETENESS OF SCANNED COPIES OF THIS PLAN SHEET.

LICENSED LANDSCAPE ARCHITECT
JOHNSONE B. BANNER
Signature
6-30-27
Renewal Date
Date
STATE OF CALIFORNIA

STATE OF CALIFORNIA
DEPARTMENT OF TRANSPORTATION

LANDSCAPE AND EROSION CONTROL SYMBOLS

NO SCALE

H1

2026 STANDARD PLAN H1

7-1-26

Return to Table of Contents

Dist	COUNTY	ROUTE	POST MILES TOTAL PROJECT	SHEET No.	TOTAL SHEETS

LICENSED LANDSCAPE ARCHITECT

September 18, 2026
PLANS APPROVAL DATE

LICENSED LANDSCAPE ARCHITECT
CHERYLENE B. BANNER-ROBES
Signature
6-30-27
Renewal Date
Date
STATE OF CALIFORNIA

THE STATE OF CALIFORNIA OR ITS OFFICERS OR AGENTS SHALL NOT BE RESPONSIBLE FOR THE ACCURACY OR COMPLETENESS OF SCANNED COPIES OF THIS PLAN SHEET.

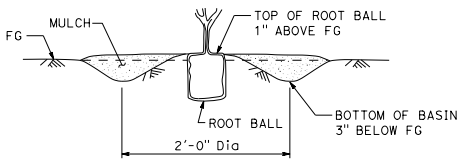

SECTION
(Flat Area)

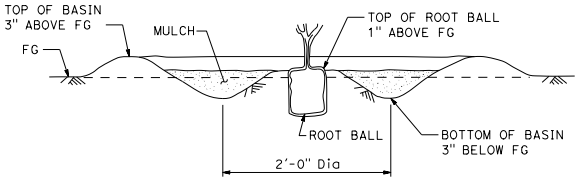

SECTION
(Flat Area)

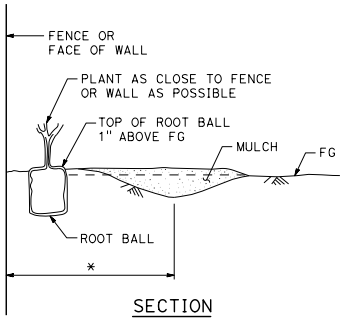

SECTION
(Flat Area)

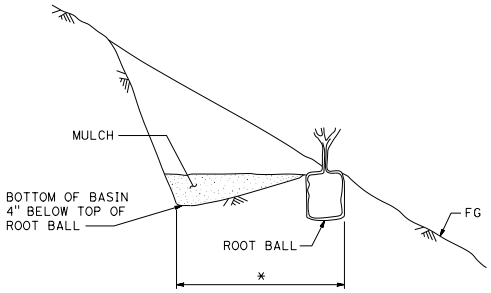

SECTION
(Slope Area)

BASIN TYPE I

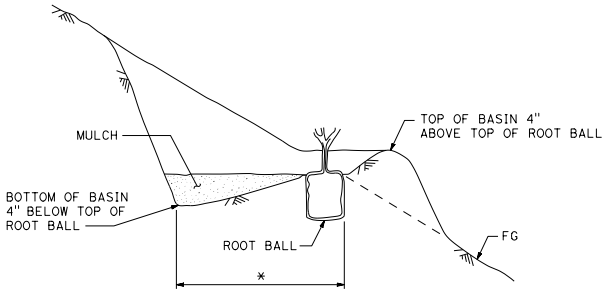

SECTION
(Slope Area)

BASIN TYPE II

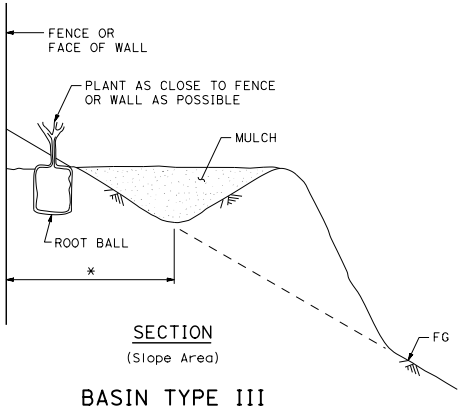

SECTION
(Slope Area)

BASIN TYPE III

* Basin area equivalent to 2'-0" Dia.

STATE OF CALIFORNIA
DEPARTMENT OF TRANSPORTATION

LANDSCAPE DETAILS

NO SCALE

H2

2026 STANDARD PLAN H2

7-1-26

Return to Table of Contents

Dist	COUNTY	ROUTE	POST MILES TOTAL PROJECT	SHEET No.	TOTAL SHEETS

LICENSED LANDSCAPE ARCHITECT

September 18, 2026

PLANS APPROVAL DATE

THE STATE OF CALIFORNIA OR ITS OFFICERS OR AGENTS SHALL NOT BE RESPONSIBLE FOR THE ACCURACY OR COMPLETENESS OF SCANNED COPIES OF THIS PLAN SHEET.

LICENSED LANDSCAPE ARCHITECT
CATHERINE B. BANNER-ROBES
Signature
6-30-27
Renewal Date
Date
STATE OF CALIFORNIA

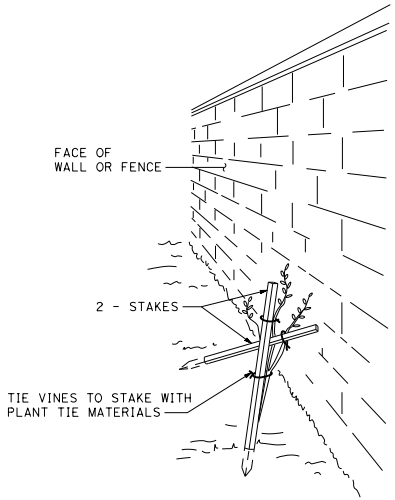

PERSPECTIVE

VINE STAKING

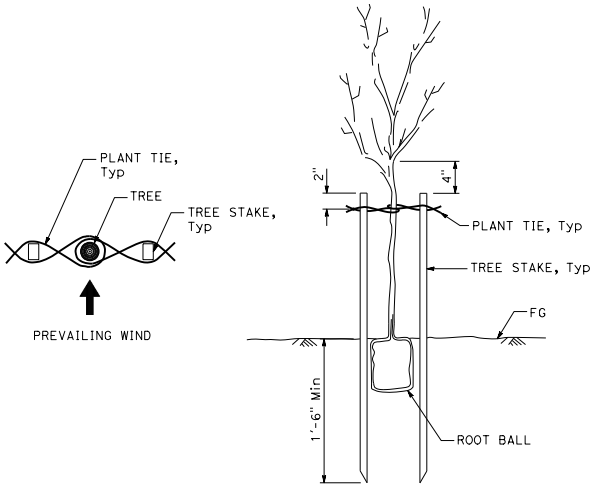

TREE STAKING

NOTES:

1. For wood support stakes:
   a. Fasten wood screws 2" from top of stake and 1" above FG.
   b. Secure wire mesh to stake with screws and tie wire.
2. For rebar support stakes, secure wire mesh to stake with tie wire.

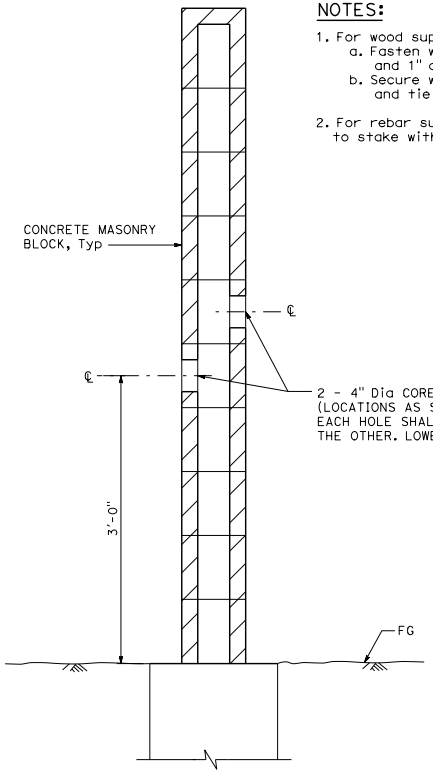

SECTION

CORE HOLE (VINE)

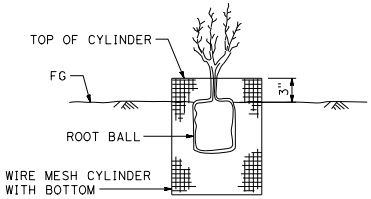

SECTION

ROOT PROTECTOR

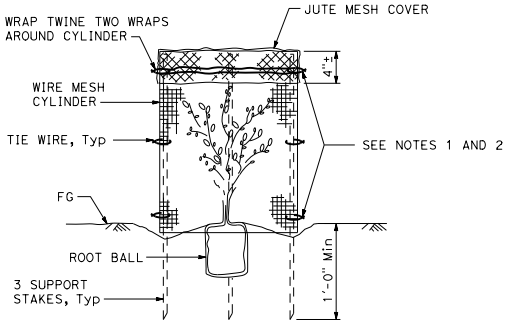

SECTION

FOLIAGE PROTECTOR

STATE OF CALIFORNIA
DEPARTMENT OF TRANSPORTATION

LANDSCAPE DETAILS

NO SCALE

H3

2026 STANDARD PLAN H3

7-1-26

Return to Table of Contents

Dist	COUNTY	ROUTE	POST MILES TOTAL PROJECT	SHEET No.	TOTAL SHEETS

LICENSED LANDSCAPE ARCHITECT

September 18, 2026
PLANS APPROVAL DATE

LICENSED LANDSCAPE ARCHITECT
JERRIDONE B. BANNER-ROSES
Signature
6-30-27
Renewal Date
Date
STATE OF CALIFORNIA

THE STATE OF CALIFORNIA OR ITS OFFICERS OR AGENTS SHALL NOT BE RESPONSIBLE FOR THE ACCURACY OR COMPLETENESS OF SCANNED COPIES OF THIS PLAN SHEET.

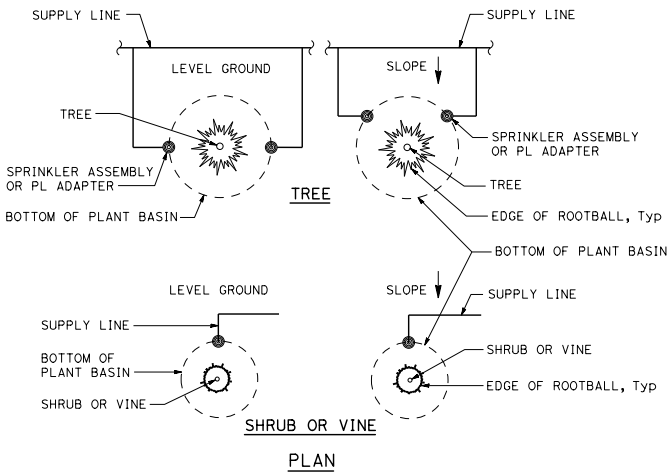

PLAN

TREE WELL ASSEMBLY AND RISER TYPE V DIAGRAM

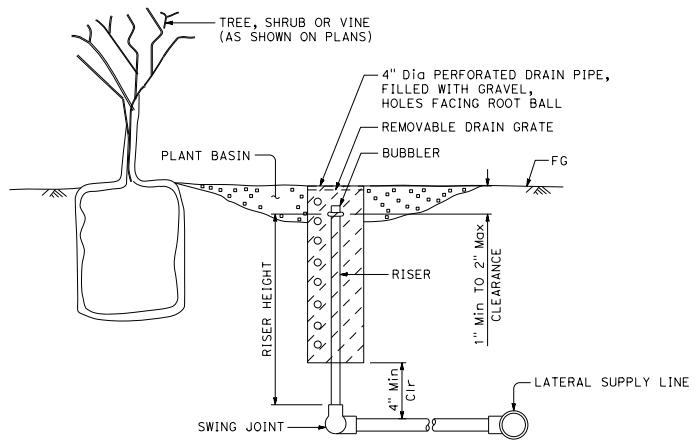

SECTION

TREE WELL SPRINKLER ASSEMBLY

NOTES:

1. See Project Plans for type and quantity of sprinklers.
2. Refer to plant legend and Standard Plan H2 for plant basin dimensions.

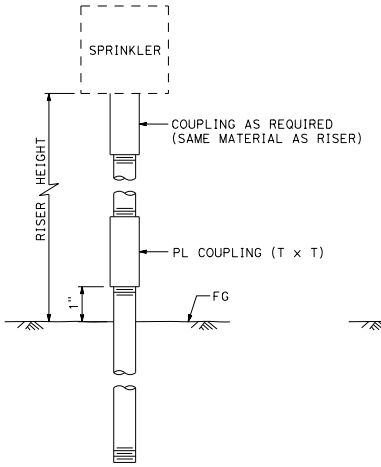

ELEVATION

RISER TYPE I

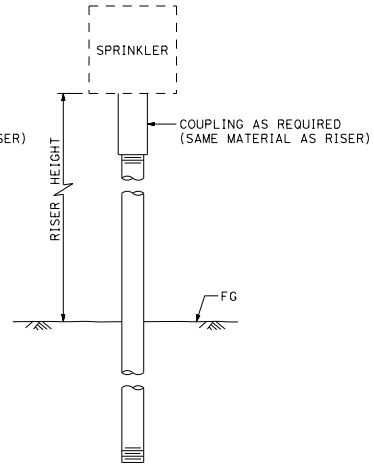

ELEVATION

RISER TYPE II

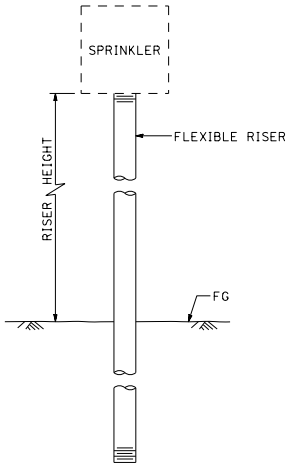

ELEVATION

RISER TYPE III

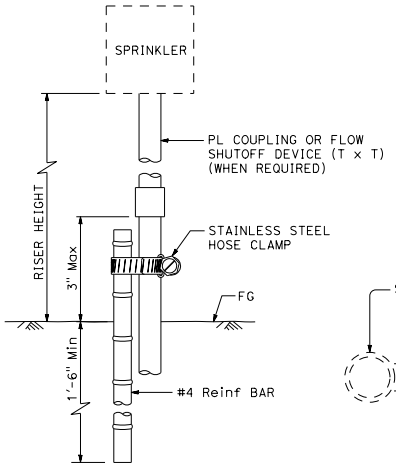

ELEVATION

RISER TYPE IV

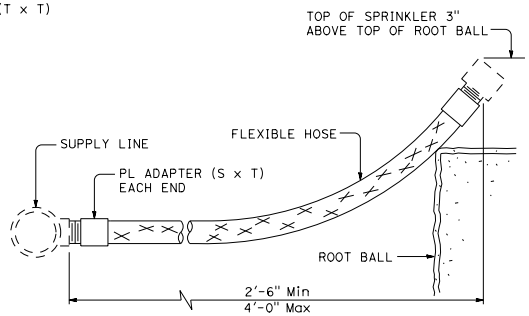

ELEVATION

RISER TYPE V

STATE OF CALIFORNIA
DEPARTMENT OF TRANSPORTATION

LANDSCAPE DETAILS (SPRINKLER ASSEMBLY)

NO SCALE

H4

7-1-26

Return to Table of Contents

Dist	COUNTY	ROUTE	POST MILES TOTAL PROJECT	SHEET No.	TOTAL SHEETS

LICENSED LANDSCAPE ARCHITECT

September 18, 2026
PLANS APPROVAL DATE

THE STATE OF CALIFORNIA OR ITS OFFICERS OR AGENTS SHALL NOT BE RESPONSIBLE FOR THE ACCURACY OR COMPLETENESS OF SCANNED COPIES OF THIS PLAN SHEET.

LICENSED LANDSCAPE ARCHITECT
JOHN BRUCE B. BANNER
Signature
6-30-27
Renewal Date
Date
STATE OF CALIFORNIA

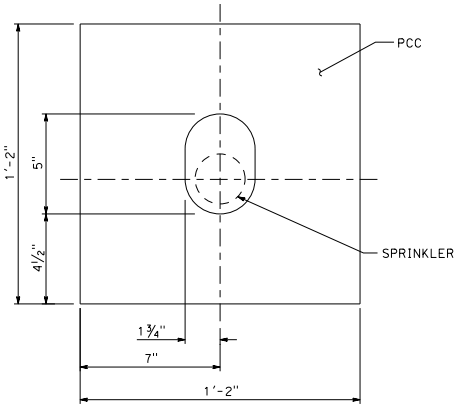

PLAN

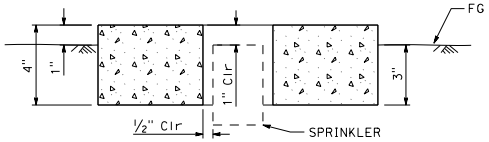

SECTION

SPRINKLER PROTECTOR TYPE I

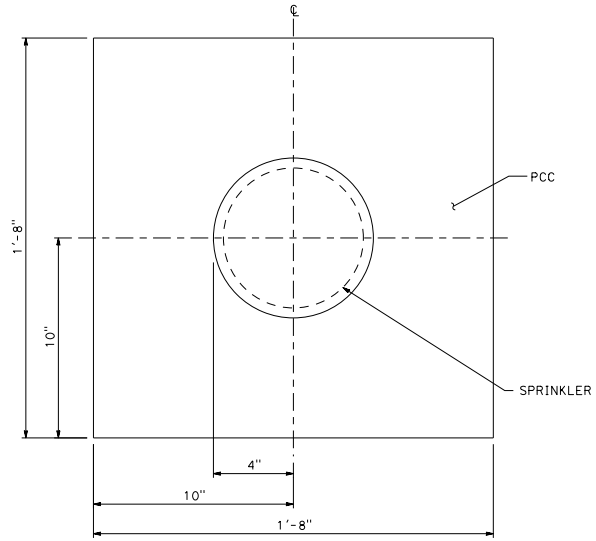

PLAN

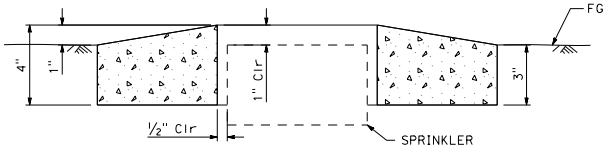

SECTION

SPRINKLER PROTECTOR TYPE II

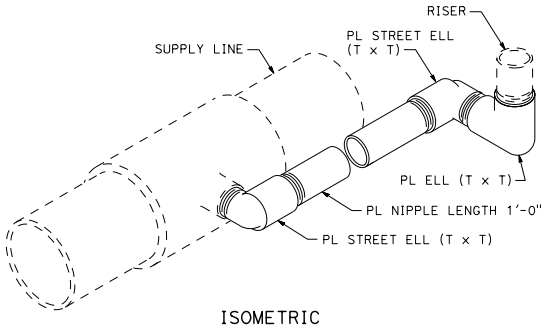

ISOMETRIC

SWING JOINT TYPE I

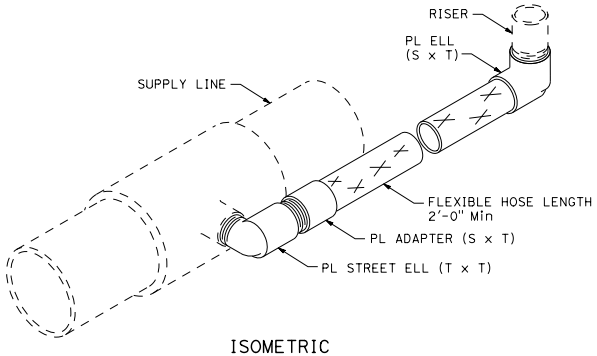

ISOMETRIC

SWING JOINT TYPE II

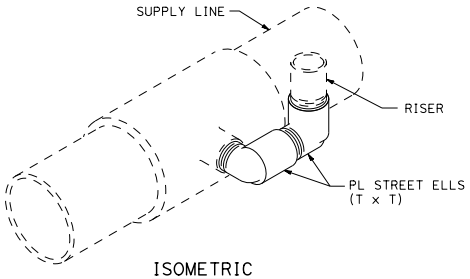

ISOMETRIC

SWING JOINT TYPE III

STATE OF CALIFORNIA
DEPARTMENT OF TRANSPORTATION

LANDSCAPE DETAILS (SWING JOINT AND PROTECTOR)

NO SCALE

H5

2026 STANDARD PLAN H5

7-1-26

Return to Table of Contents

Dist	COUNTY	ROUTE	POST MILES TOTAL PROJECT	SHEET No.	TOTAL SHEETS

LICENSED LANDSCAPE ARCHITECT

September 18, 2026
PLANS APPROVAL DATE

THE STATE OF CALIFORNIA OR ITS OFFICERS OR AGENTS SHALL NOT BE RESPONSIBLE FOR THE ACCURACY OR COMPLETENESS OF SCANNED COPIES OF THIS PLAN SHEET.

LICENSED LANDSCAPE ARCHITECT
JEROME B. BANKS
Signature
6-30-27
Renewal Date
Date
STATE OF CALIFORNIA

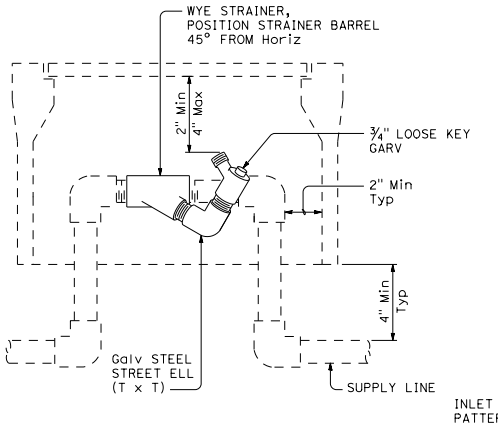

ELEVATION

WYE STRAINER ASSEMBLY

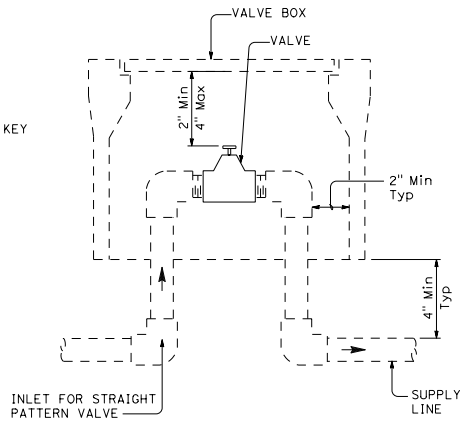

ELEVATION

VALVE

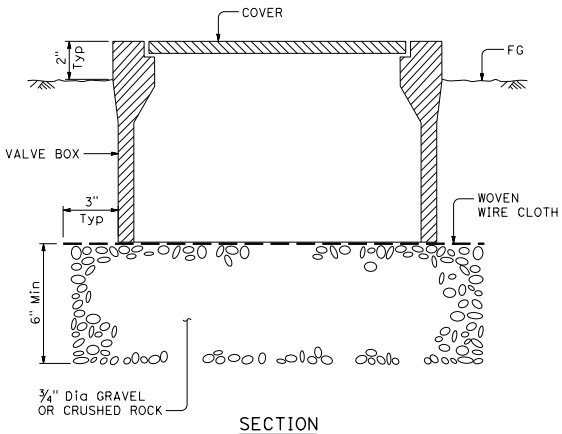

SECTION

VALVE BOX

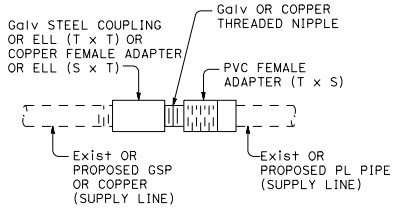

GALVANIZED OR COPPER PIPE CONNECTION TO PLASTIC PIPE

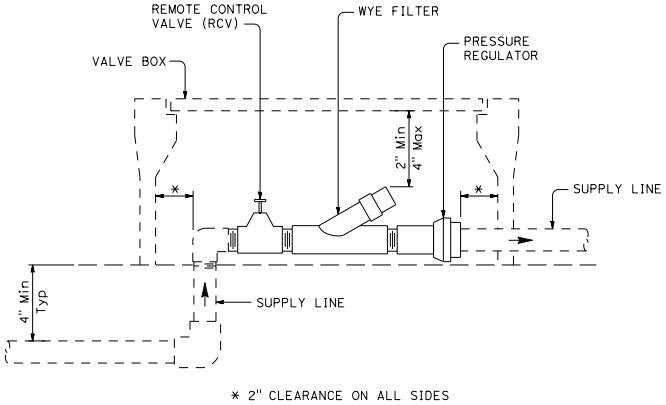

ELEVATION

DRIP VALVE ASSEMBLY

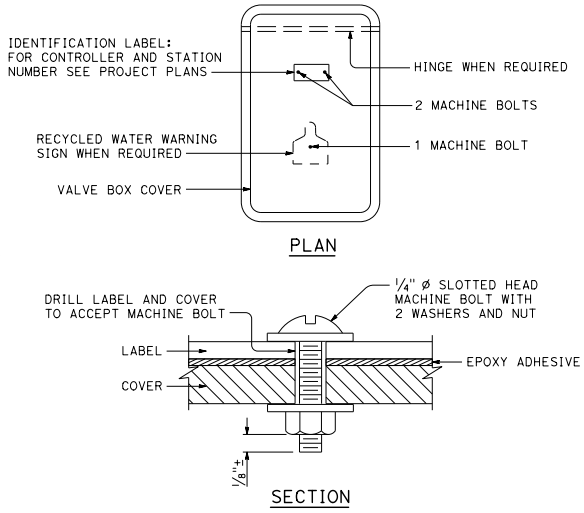

SECTION

VALVE BOX IDENTIFICATION

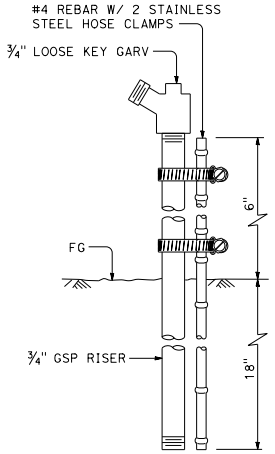

ELEVATION

GARDEN VALVE ASSEMBLY

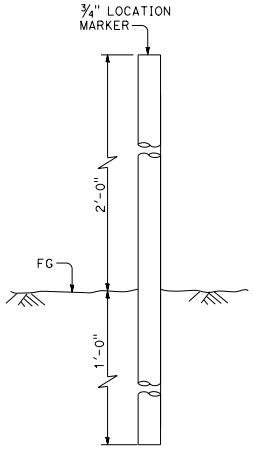

ELEVATION

LOCATION MARKER

GARDEN VALVE ASSEMBLY

STATE OF CALIFORNIA
DEPARTMENT OF TRANSPORTATION

LANDSCAPE DETAILS

NO SCALE

H6

2026 STANDARD PLAN H6

7-1-26

Return to Table of Contents

Dist	COUNTY	ROUTE	POST MILES TOTAL PROJECT	SHEET No.	TOTAL SHEETS

LICENSED LANDSCAPE ARCHITECT

September 18, 2026
PLANS APPROVAL DATE

LICENSED LANDSCAPE ARCHITECT
JERRODNE B. BANKER-ROBERS
Signature
6-30-27
Renewal Date
Date
STATE OF CALIFORNIA

THE STATE OF CALIFORNIA OR ITS OFFICERS OR AGENTS SHALL NOT BE RESPONSIBLE FOR THE ACCURACY OR COMPLETENESS OF SCANNED COPIES OF THIS PLAN SHEET.

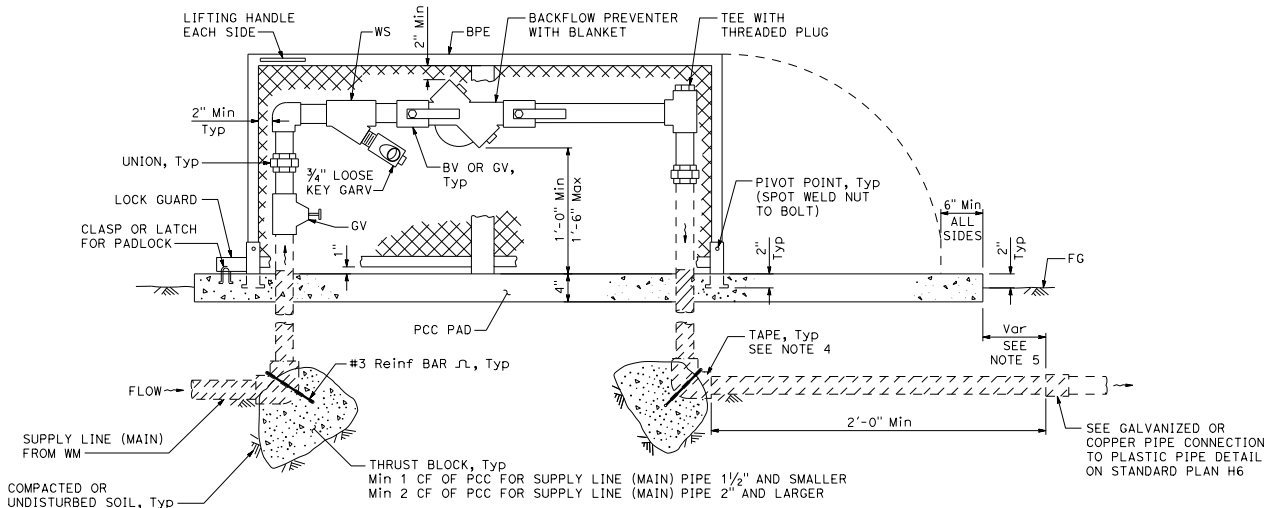

ELEVATION

BACKFLOW PREVENTER ASSEMBLY

In one piece enclosure

NOTES:

1. Wye strainer and fittings must be the same size as the backflow preventer shown on the plans.
2. Wye strainer must be located and fitted in accordance with local water ordinance.
3. Supply line (main) pipe installed from the water meter to the backflow preventer assembly must be the same type of pipe used for the backflow preventer assembly manifold pipe.
4. All metal in contact with soil and portland cement concrete must be wrapped with 2" wide plastic backed adhesive polyethylene tape 20 mil thick with ½" overlap.
5. The connector must be located 6 to 9 inches away from the edge of PCC pad.

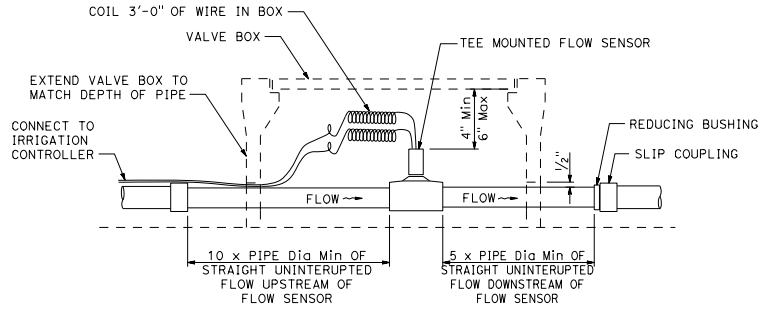

SECTION

FLOW SENSOR

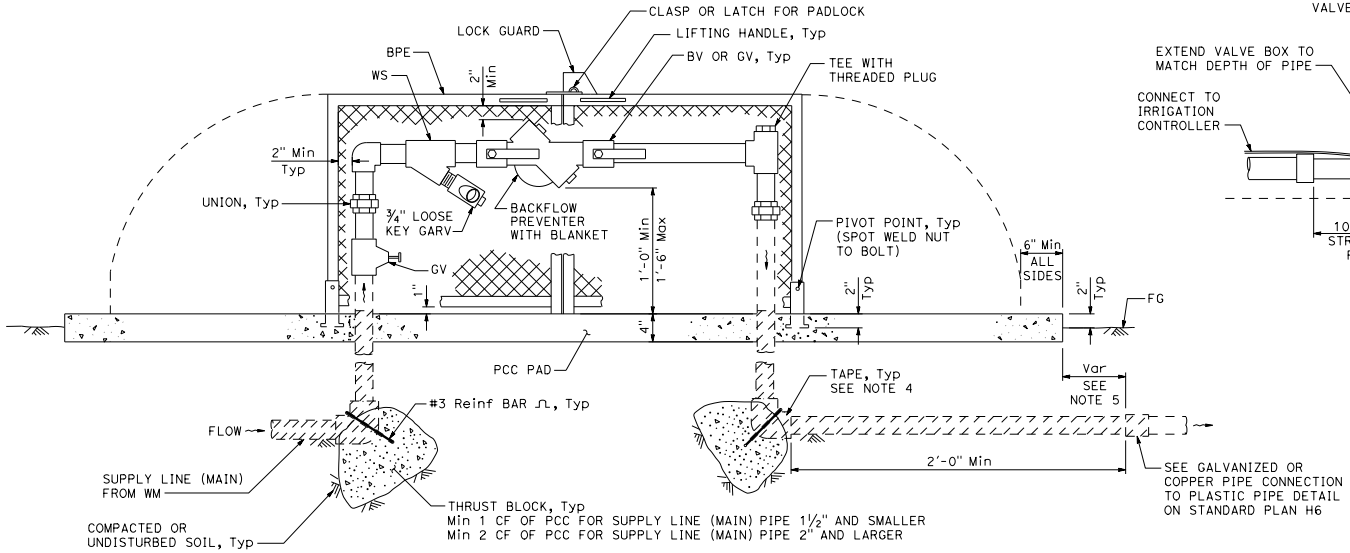

ELEVATION

BACKFLOW PREVENTER ASSEMBLY

In two piece enclosure

STATE OF CALIFORNIA
DEPARTMENT OF TRANSPORTATION

LANDSCAPE DETAILS

NO SCALE

H7

2026 STANDARD PLAN H7

7-1-26

Return to Table of Contents

Dist	COUNTY	ROUTE	POST MILES TOTAL PROJECT	SHEET No.	TOTAL SHEETS

LICENSED LANDSCAPE ARCHITECT

September 18, 2026
PLANS APPROVAL DATE

THE STATE OF CALIFORNIA OR ITS OFFICERS OR AGENTS SHALL NOT BE RESPONSIBLE FOR THE ACCURACY OR COMPLETENESS OF SCANNED COPIES OF THIS PLAN SHEET.

LICENSED LANDSCAPE ARCHITECT
JEREMIAH B. BANNER
Signature
6-30-27
Renewal Date
Date
STATE OF CALIFORNIA

* WHEN USED WITH RECYCLED WATER, REPLACE GSP PIPE FITTINGS WITH PVC AND COUPLING.

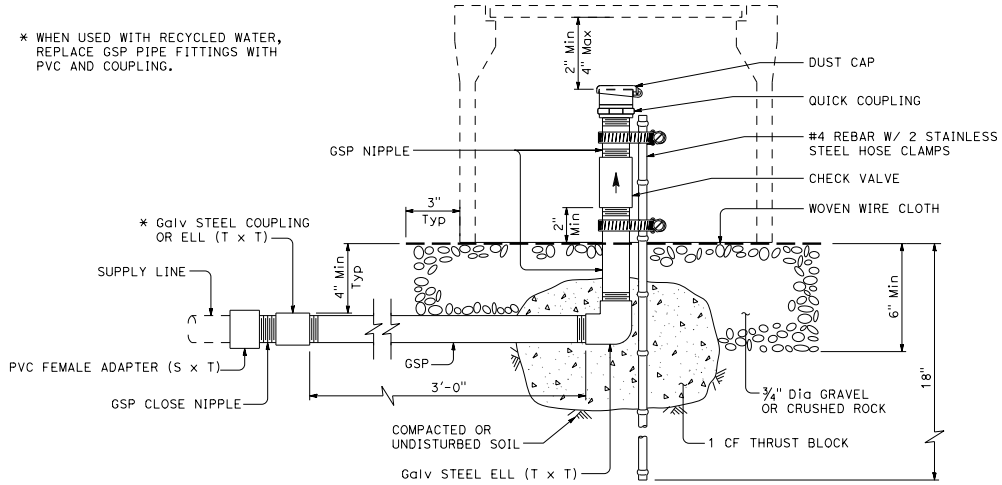

ELEVATION

QUICK COUPLING VALVE

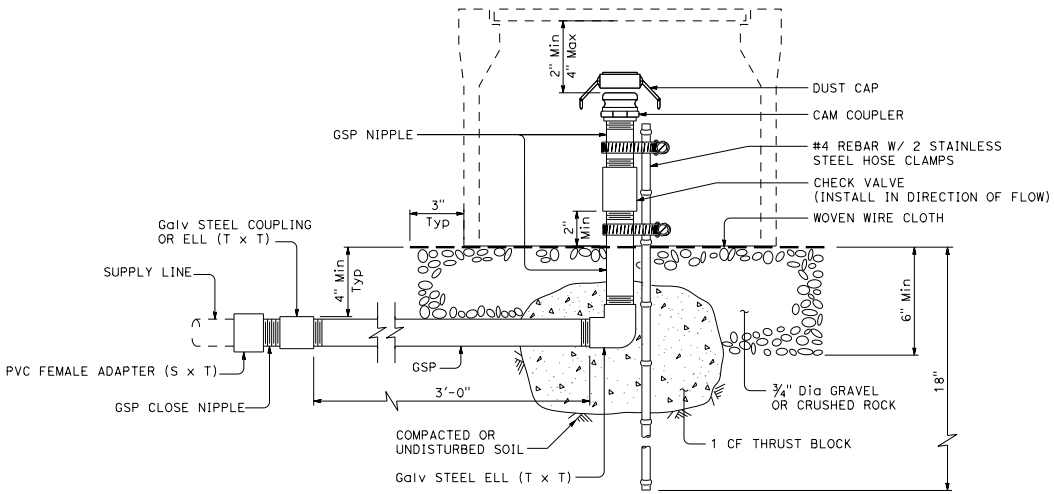

ELEVATION

CAM COUPLER ASSEMBLY

NOTES:

1. 40" to 50".
2. 12" downstream of RCV, 18" upstream of RCV.

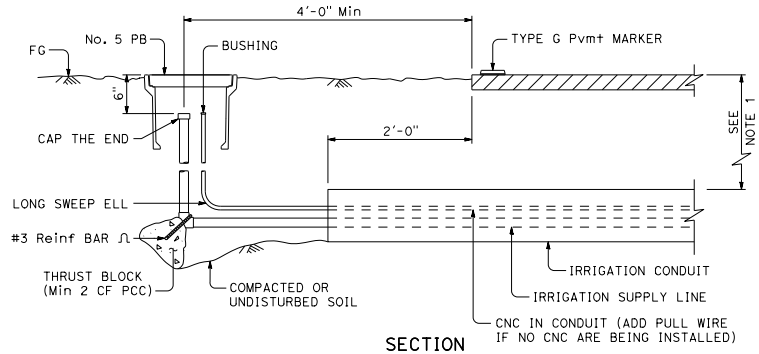

SECTION

IRRIGATION CONDUIT

Under traveled way

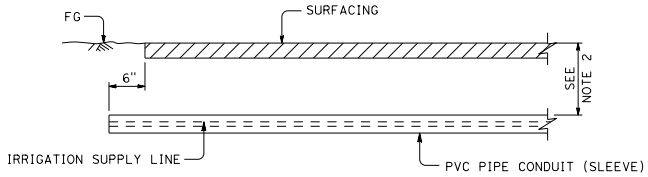

SECTION

PVC PIPE CONDUIT (SLEEVE)

Under sidewalks, driveways pavement, slope paving, paved ditches and paths

STATE OF CALIFORNIA
DEPARTMENT OF TRANSPORTATION

LANDSCAPE DETAILS

NO SCALE

H8

2026 STANDARD PLAN H8

7-1-26

Return to Table of Contents

Dist	COUNTY	ROUTE	POST MILES TOTAL PROJECT	SHEET No.	TOTAL SHEETS

LICENSED LANDSCAPE ARCHITECT

September 18, 2026
PLANS APPROVAL DATE

LICENSED LANDSCAPE ARCHITECT
JERRODNE B. BANNER-ROSES
Signature
6-30-27
Renewal Date
Date
STATE OF CALIFORNIA

THE STATE OF CALIFORNIA OR ITS OFFICERS OR AGENTS SHALL NOT BE RESPONSIBLE FOR THE ACCURACY OR COMPLETENESS OF SCANNED COPIES OF THIS PLAN SHEET.

THRUST BLOCK SCHEDULE						
PIPE SIZE	BEARING AREA (SQFT)					
	TEE	PLUG	WYE	90°	45°	CROSS/22.5°
3"	1.0	1.0	1.0	1.5	1.0	0.5
4"	1.5	1.5	1.5	1.5	1.5	1.0
6"	2.0	2.0	2.0	1.5	1.5	1.0

NOTES:

Use for non-solvent welded pipe.

Thrust block must be poured against undisturbed soil.

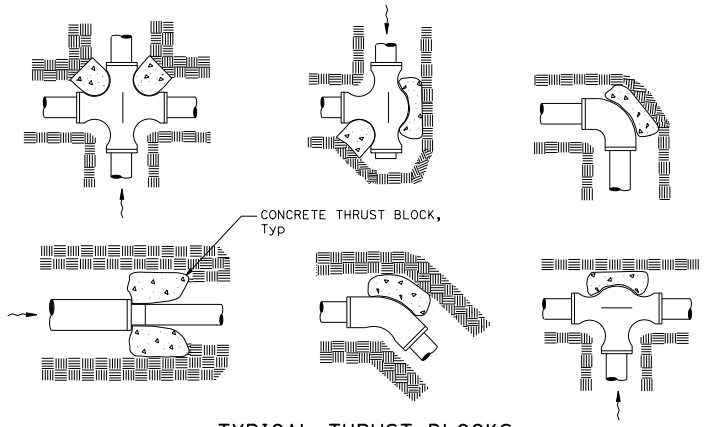

TYPICAL THRUST BLOCKS

NOTES:

1. 12" downstream of RCV, 18" upstream of RCV.
2. Width sufficent to allow snaking of pipe and CNC bundles without stacking.
3. 1'-0" minimum to back of sidewalk.
4. 2" minimum or Dia of largest pipe in trench.

LEGEND:

DIRECTION OF FLOW

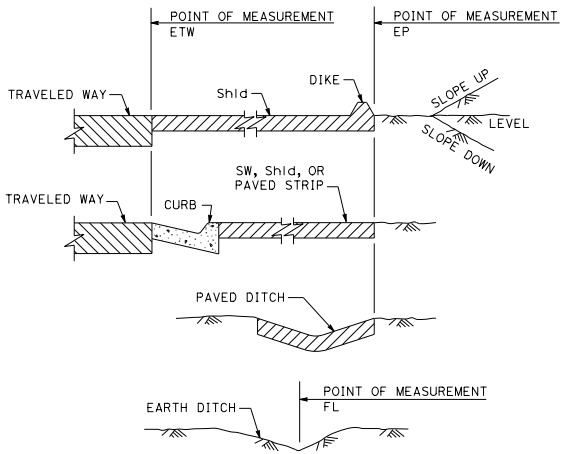

SECTION

POINTS OF MEASUREMENT

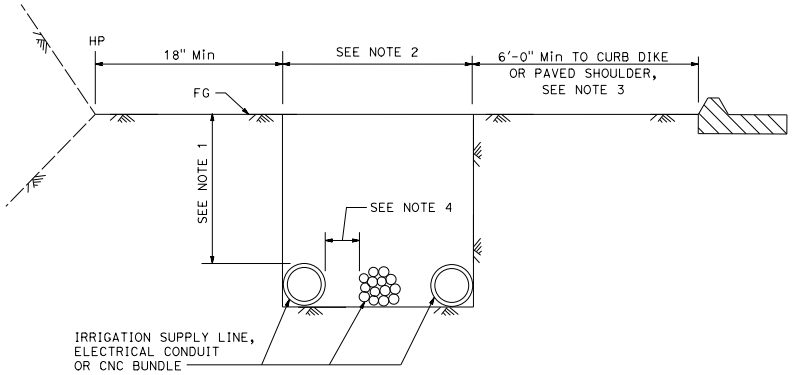

SECTION

IRRIGATION TRENCH DETAIL

STATE OF CALIFORNIA
DEPARTMENT OF TRANSPORTATION

LANDSCAPE DETAILS

NO SCALE

H9

2026 STANDARD PLAN H9

7-1-26

Return to Table of Contents

Dist	COUNTY	ROUTE	POST MILES TOTAL PROJECT	SHEET No.	TOTAL SHEETS

LICENSED LANDSCAPE ARCHITECT

September 18, 2026
PLANS APPROVAL DATE

THE STATE OF CALIFORNIA OR ITS OFFICERS OR AGENTS SHALL NOT BE RESPONSIBLE FOR THE ACCURACY OR COMPLETENESS OF SCANNED COPIES OF THIS PLAN SHEET.

LICENSED LANDSCAPE ARCHITECT
JOHN BRUNE B. BANKER JR.
Signature
6-30-27
Renewal Date
Date
STATE OF CALIFORNIA

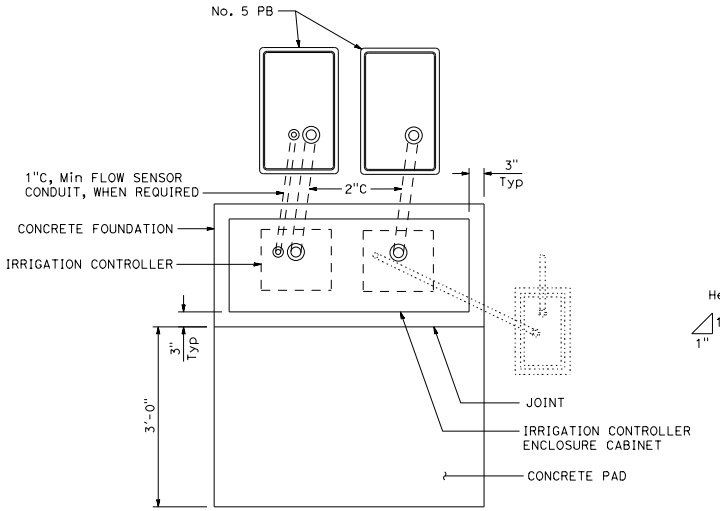

PLAN

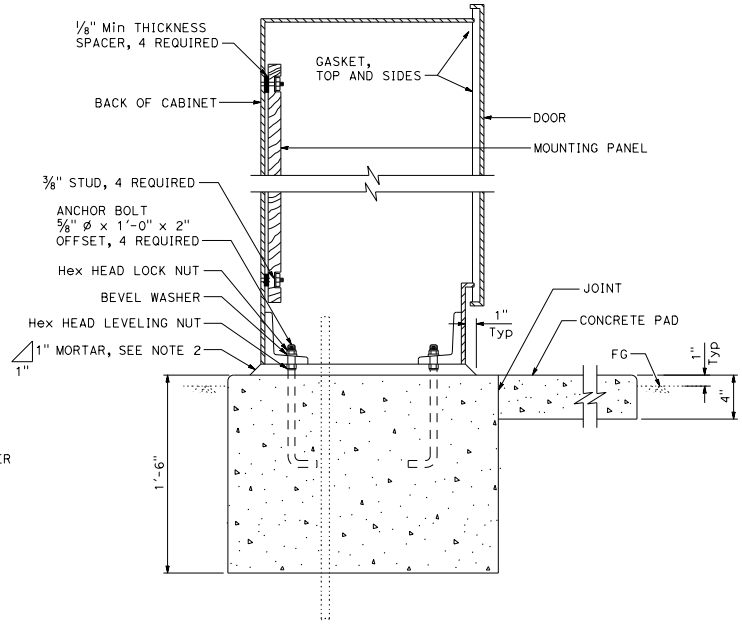

CABINET SECTION

NOTES:

1. All dimensions are nominal.
2. Mortar shall be 1-part cement, 2-parts plaster sand.
3. Rain sensor unit and remote control valve actuator connectors to be provided when specified.
4. See project plans for location and number of irrigation controllers for each cabinet. Install the cabinet with the back facing the direction of oncoming traffic in the nearest traffic lane.
5. The electrical items shown in dropout are not labeled. See Standard Plan ES-3H for electrical requirements.

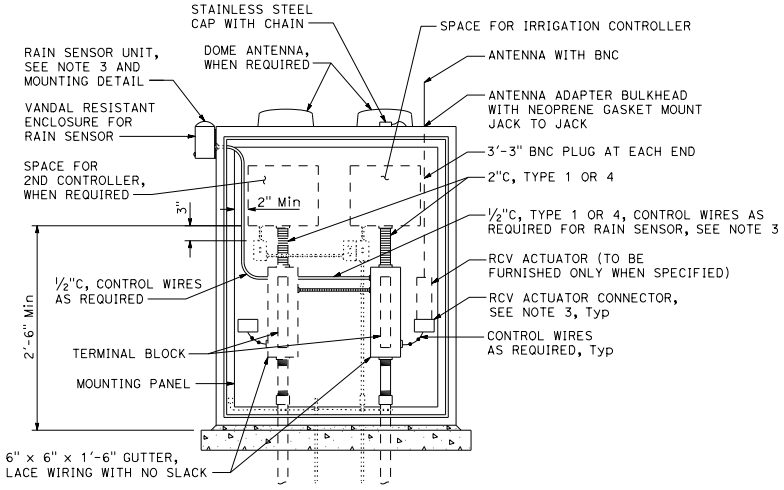

ELEVATION

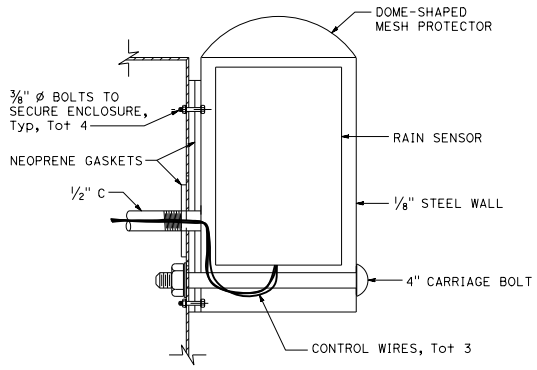

RAIN SENSOR UNIT

STATE OF CALIFORNIA
DEPARTMENT OF TRANSPORTATION

IRRIGATION CONTROLLER ENCLOSURE CABINET

NO SCALE

H10

2026 STANDARD PLAN H10

7-1-26

Return to Table of Contents

Dist	COUNTY	ROUTE	POST MILES TOTAL PROJECT	SHEET No.	TOTAL SHEETS

LICENSED LANDSCAPE ARCHITECT

September 18, 2026
PLANS APPROVAL DATE

LICENSED LANDSCAPE ARCHITECT
JOHN BRUNE B. BANNER
Signature
6-30-27
Renewal Date
Date
STATE OF CALIFORNIA

THE STATE OF CALIFORNIA OR ITS OFFICERS OR AGENTS SHALL NOT BE RESPONSIBLE FOR THE ACCURACY OR COMPLETENESS OF SCANNED COPIES OF THIS PLAN SHEET.

BICYCLE RACK DATA TABLE

TYPE	STOCK SHAPE	"X"		"Y"		"Z"	PIPE OD
		Min	Max	Min	Max	Max	
A	TUBE	30"	30"	34"	36"	11"	1½" TO 2"
	SQUARE	30"	34"	34"	36"	18"	2"
B	TUBE	20"	24"	34"	36"	21"	1½" TO 2"
	SQUARE	20"	21"	34"	36"	11"	2"
C	TUBE	31"	42"	31"	36"	12"	2⅜" TO 3⅜"
	SQUARE	35"	40"	31"	35"	12"	2" TO 2⅜"

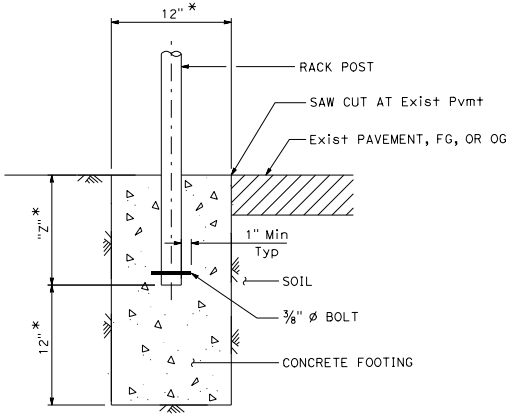

SECTION

INSTALLATION (TYPE 1)

(In-ground)

* Unless otherwise recommended by the manufacturer

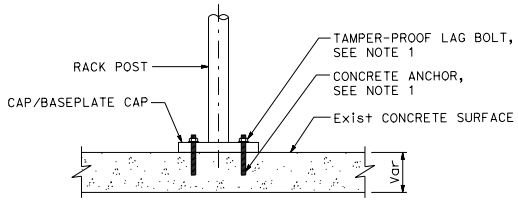

SECTION

INSTALLATION (TYPE 2)

(Surface-mount)

NOTES:

1. Install bicycle racks using lag bolts and concrete anchors recommended by the manufacturer.
2. Install cap or baseplate cap when included by the manufacturer. Cap size and shape may vary.
3. When a bicycle rack logo is required, see roadway plans for logo details.
4. For information not shown, see bicycle rack manufacturer's product data.

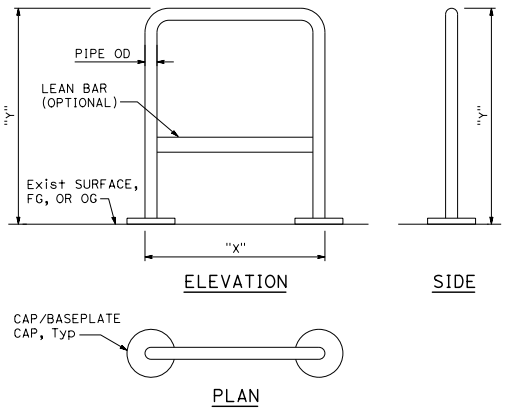

ELEVATION SIDE PLAN

BICYCLE RACK (TYPE A)

(2 Stall)

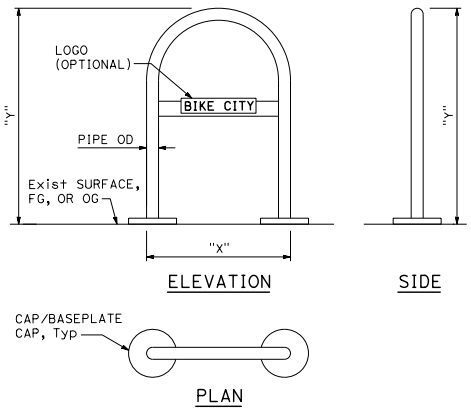

ELEVATION SIDE PLAN

BICYCLE RACK (TYPE B)

(2 Stall)

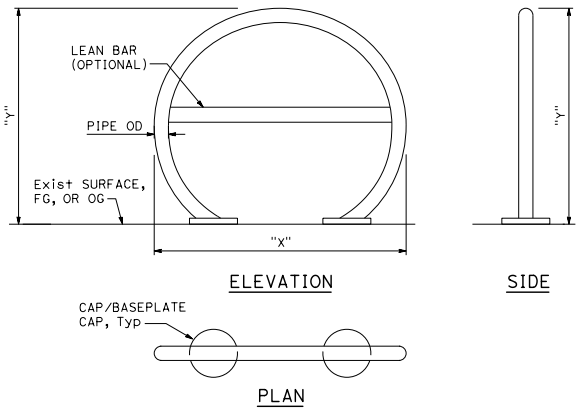

ELEVATION SIDE PLAN

BICYCLE RACK (TYPE C)

(2 Stall)

STATE OF CALIFORNIA
DEPARTMENT OF TRANSPORTATION

SITE FURNISHING DETAILS (BICYCLE RACKS)

NO SCALE

H21

2026 STANDARD PLAN H21

7-1-26

Return to Table of Contents

Dist	COUNTY	ROUTE	POST MILES TOTAL PROJECT	SHEET No.	TOTAL SHEETS

LICENSED LANDSCAPE ARCHITECT

September 18, 2026
PLANS APPROVAL DATE

THE STATE OF CALIFORNIA OR ITS OFFICERS OR AGENTS SHALL NOT BE RESPONSIBLE FOR THE ACCURACY OR COMPLETENESS OF SCANNED COPIES OF THIS PLAN SHEET.

LICENSED LANDSCAPE ARCHITECT
CATHERINE B. BANNER-ROSES
Signature
6-30-27
Renewal Date
Date
STATE OF CALIFORNIA

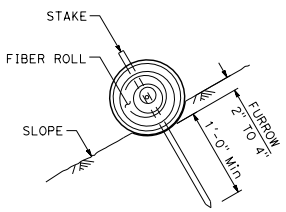

SECTION

FIBER ROLL (TYPE 1)

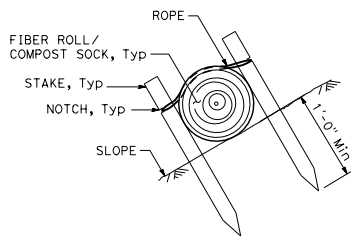

SECTION

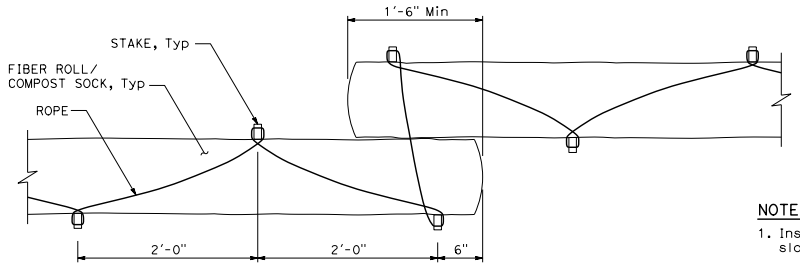

PLAN

FIBER ROLL/COMPOST SOCK (TYPE 2)

NOTES:

1. Installations shown in the perspectives are for slope inclination of 10:1 (Horiz:Vert) and steeper.
2. May install stake adjacent to bottom edge of compost sock.

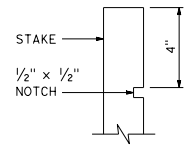

ELEVATION

STAKE NOTCH DETAIL

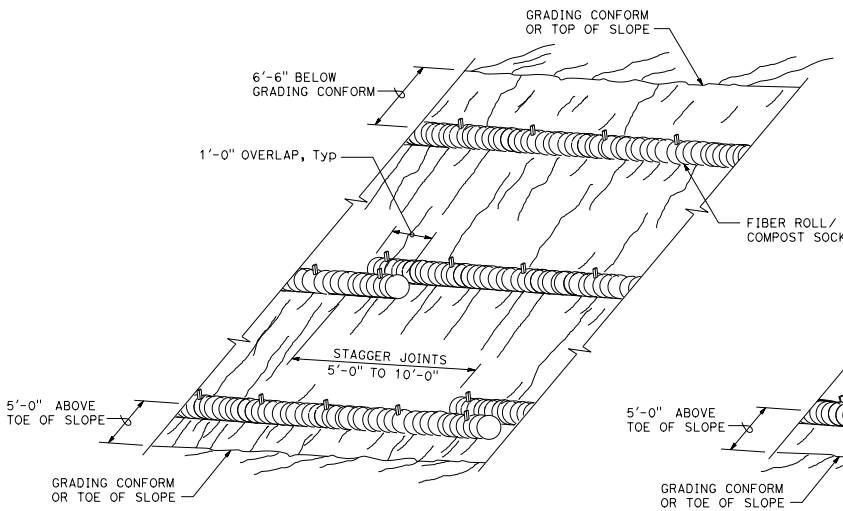

PERSPECTIVE

FIBER ROLL/COMPOST SOCK (TYPE 1)

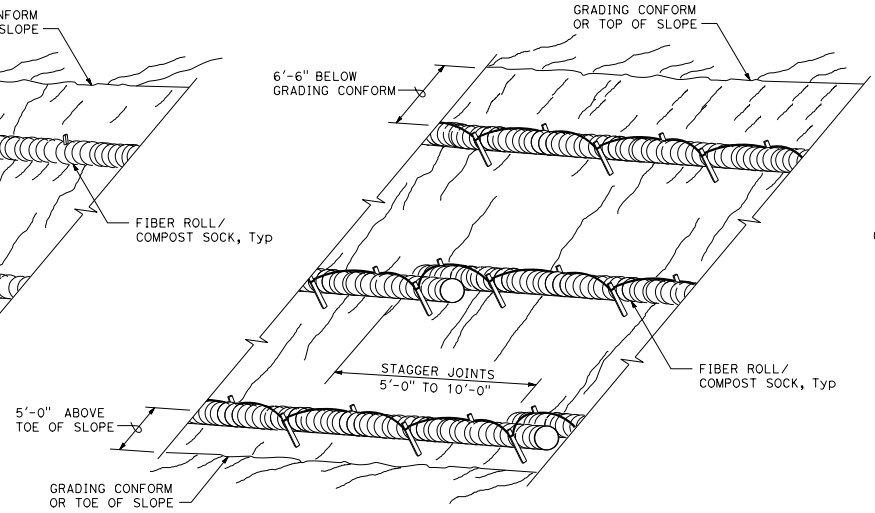

PERSPECTIVE

FIBER ROLL/COMPOST SOCK (TYPE 2)

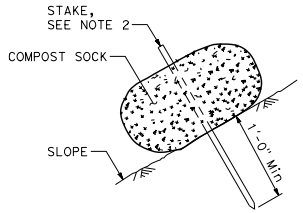

SECTION

COMPOST SOCK (TYPE 1)

STATE OF CALIFORNIA
DEPARTMENT OF TRANSPORTATION

EROSION CONTROL DETAILS
FIBER ROLL AND COMPOST SOCK

NO SCALE

H51

2026 STANDARD PLAN H51

7-1-26

Return to Table of Contents

Dist	COUNTY	ROUTE	POST MILES TOTAL PROJECT	SHEET No.	TOTAL SHEETS

LICENSED LANDSCAPE ARCHITECT

September 18, 2026

PLANS APPROVAL DATE

THE STATE OF CALIFORNIA OR ITS OFFICERS OR AGENTS SHALL NOT BE RESPONSIBLE FOR THE ACCURACY OR COMPLETENESS OF SCANNED COPIES OF THIS PLAN SHEET.

LICENSED LANDSCAPE ARCHITECT
JEREMIAH B. BANNER
Signature
6-30-27
Renewal Date
Date
STATE OF CALIFORNIA

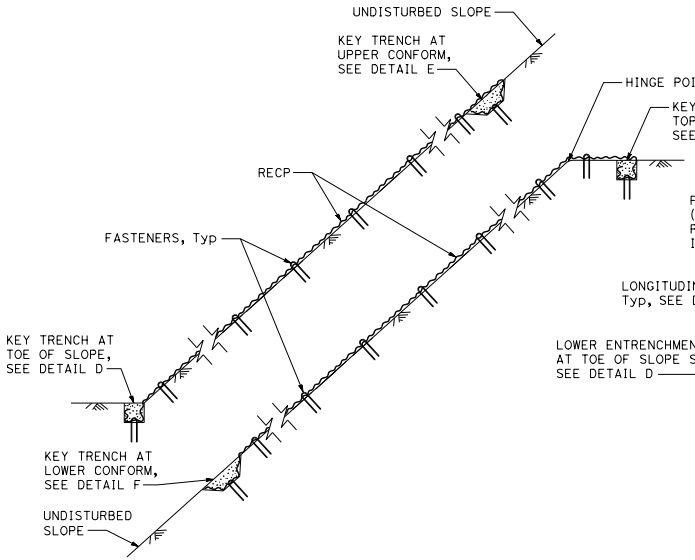

SECTION

ROLLED EROSION CONTROL PRODUCT ON SLOPE WITH VARIOUS KEY ENTRENCHMENTS

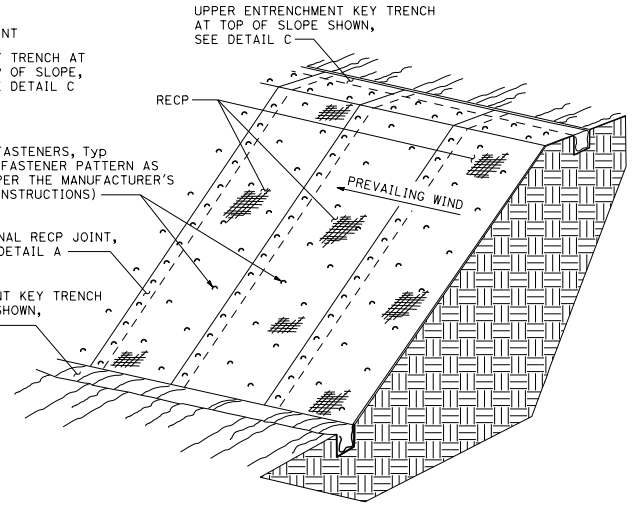

ISOMETRIC

ROLLED EROSION CONTROL PRODUCT ON SLOPE

NOTES:

1. Fiber roll/compost sock shown for reference purposes only.
2. If transverse rolled erosion control product joints are required on slopes, see Detail B.

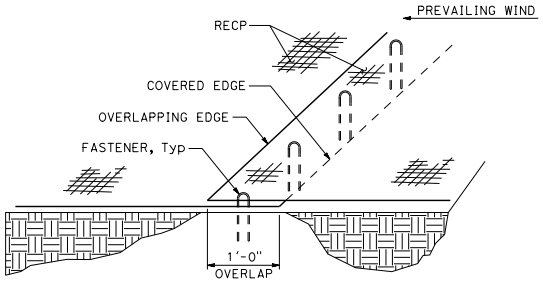

PERSPECTIVE

DETAIL A

LONGITUDINAL ROLLED EROSION CONTROL PRODUCT JOINT

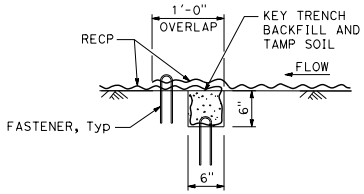

SECTION

DETAIL B

TRANSVERSE ROLLED EROSION CONTROL PRODUCT JOINT

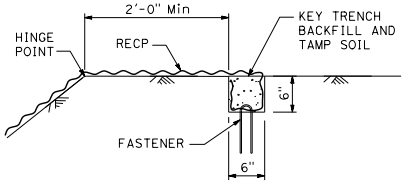

SECTION

DETAIL C

KEY TRENCH AT TOP OF SLOPE

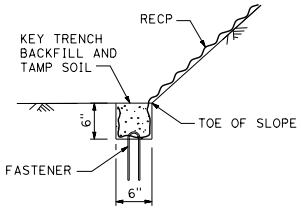

SECTION

DETAIL D

KEY TRENCH AT TOE OF SLOPE

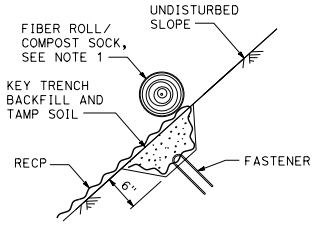

SECTION

DETAIL E

KEY TRENCH AT UPPER CONFORM

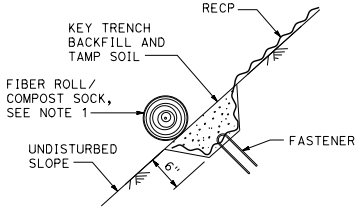

SECTION

DETAIL F

KEY TRENCH AT LOWER CONFORM

STATE OF CALIFORNIA
DEPARTMENT OF TRANSPORTATION

ROLLED EROSION CONTROL PRODUCT

NO SCALE

H52

2026 STANDARD PLAN H52

7-1-26

Return to Table of Contents

Dist	COUNTY	ROUTE	POST MILES TOTAL PROJECT	SHEET No.	TOTAL SHEETS

Jawad Naderi
REGISTERED CIVIL ENGINEER

September 18, 2026
PLANS APPROVAL DATE

REGISTERED PROFESSIONAL ENGINEER
Mohammad Jawad Naderi
No. C96340
Exp. 9-30-26
CIVIL
STATE OF CALIFORNIA

THE STATE OF CALIFORNIA OR ITS OFFICERS OR AGENTS SHALL NOT BE RESPONSIBLE FOR THE ACCURACY OR COMPLETENESS OF SCANNED COPIES OF THIS PLAN SHEET.

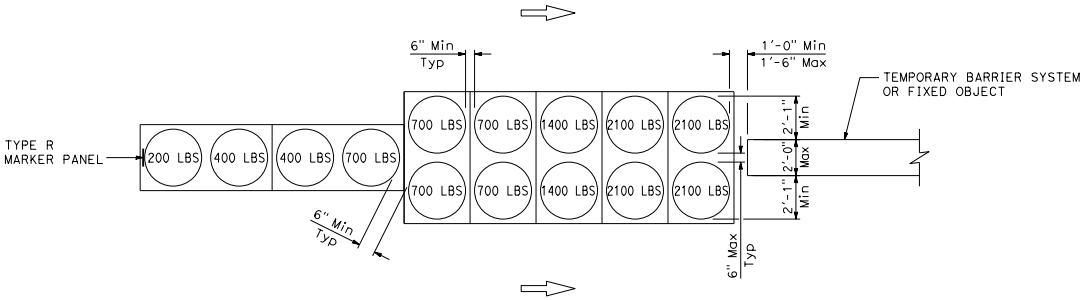

ARRAY 'TU14M'

Approach speed 45 mph or more

NOTES:

1. (XXX) Indicates sand filled module location and weight of sand in pounds for each module. Module spacing is based on the greater diameter of the module.
2. All sand weights are nominal. Sand must contain no more than 7 percent water.
3. Refer to Standard Plan A73B for marker details.
4. Approach speeds indicated conform to MASH criteria.

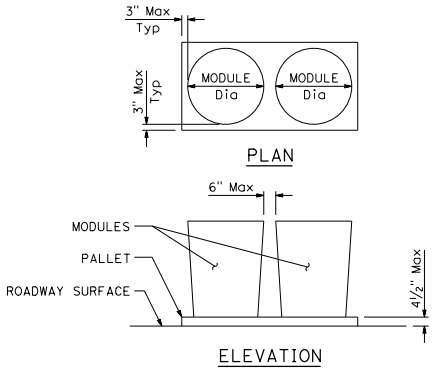

CRASH CUSHION PALLET DETAIL

STATE OF CALIFORNIA
DEPARTMENT OF TRANSPORTATION

TEMPORARY CRASH CUSHION SAND FILLED (UNIDIRECTIONAL)

NO SCALE

T1A

2026 STANDARD PLAN T1A

7-1-26

Return to Table of Contents

Dist	COUNTY	ROUTE	POST MILES TOTAL PROJECT	SHEET No.	TOTAL SHEETS

Jawad Naderi
REGISTERED CIVIL ENGINEER

September 18, 2026
PLANS APPROVAL DATE

REGISTERED PROFESSIONAL ENGINEER
Mohammad Jawad Naderi
No. C96340
Exp. 9-30-26
CIVIL
STATE OF CALIFORNIA

THE STATE OF CALIFORNIA OR ITS OFFICERS OR AGENTS SHALL NOT BE RESPONSIBLE FOR THE ACCURACY OR COMPLETENESS OF SCANNED COPIES OF THIS PLAN SHEET.

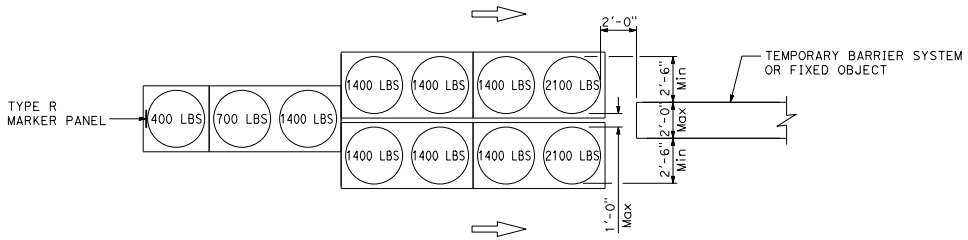

ARRAY 'TU11'

Approach speed less than 45 mph

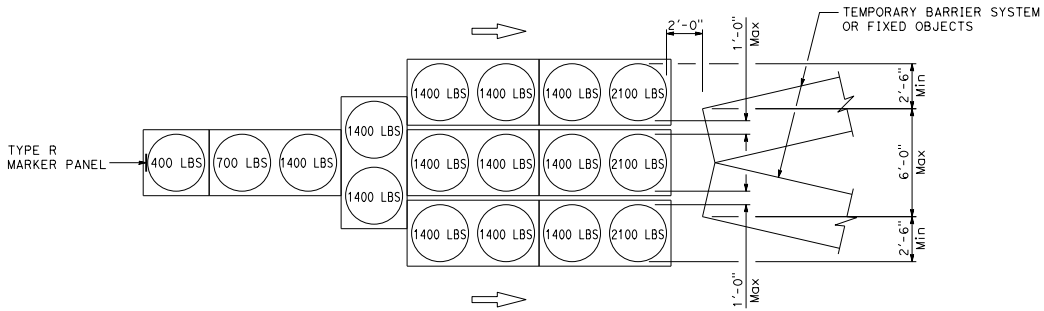

ARRAY 'TU17'

Approach speed less than 45 mph

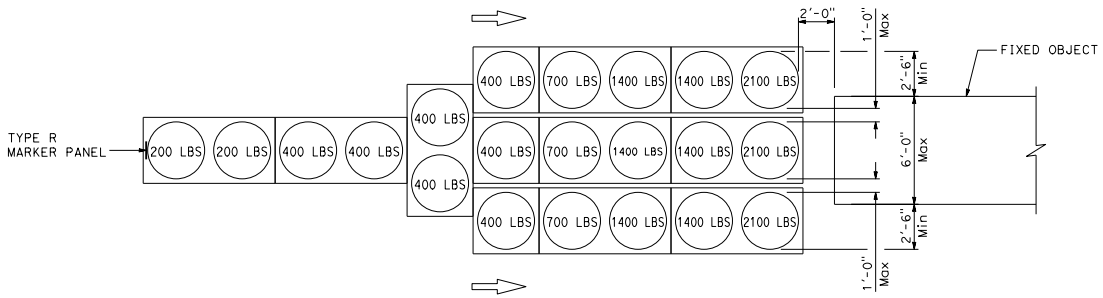

ARRAY 'TU21'

Approach speed 45 mph or more

NOTES:

1. (XXX) Indicates sand filled module location and weight of sand in pounds for each module. Module spacing is based on the greater diameter of the module.
2. All sand weights are nominal. Sand must contain no more than 7 percent water.
3. Refer to Standard Plan A73B for marker details.
4. Approach speeds indicated conform to NCHRP Report 350 criteria.

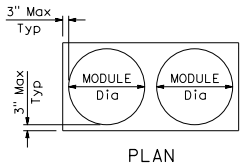

PLAN

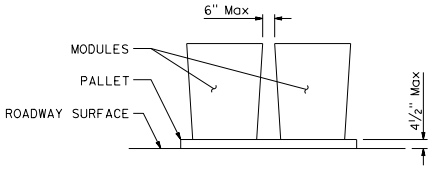

ELEVATION

CRASH CUSHION PALLET DETAIL

STATE OF CALIFORNIA
DEPARTMENT OF TRANSPORTATION

TEMPORARY CRASH CUSHION SAND FILLED (UNIDIRECTIONAL)

NO SCALE

T1A1

2026 STANDARD PLAN T1A1

7-1-26

Return to Table of Contents

Dist	COUNTY	ROUTE	POST MILES TOTAL PROJECT	SHEET No.	TOTAL SHEETS

Jawad Naderi
REGISTERED CIVIL ENGINEER

September 18, 2026
PLANS APPROVAL DATE

REGISTERED PROFESSIONAL ENGINEER
Mohammad Jawad Naderi
No. C96340
Exp. 9-30-26
CIVIL
STATE OF CALIFORNIA

THE STATE OF CALIFORNIA OR ITS OFFICERS OR AGENTS SHALL NOT BE RESPONSIBLE FOR THE ACCURACY OR COMPLETENESS OF SCANNED COPIES OF THIS PLAN SHEET.

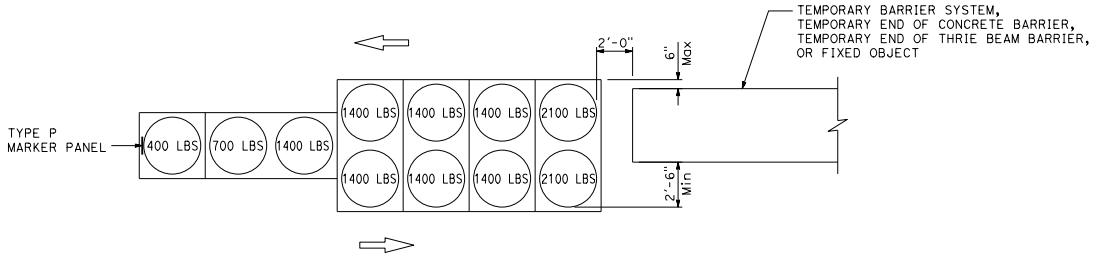

ARRAY 'TB11'

Approach speed less than 45 mph

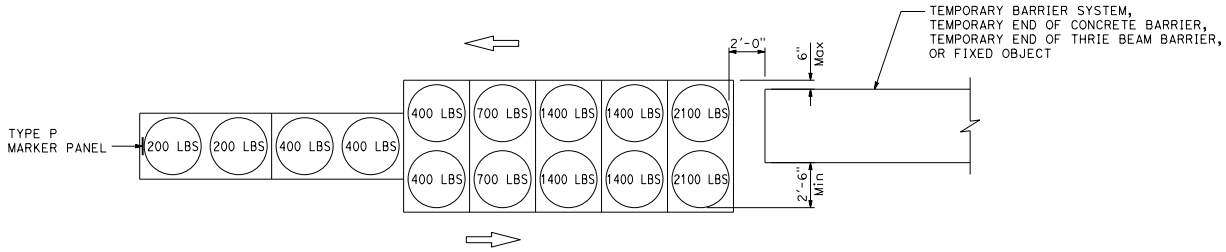

ARRAY 'TB14'

Approach speed 45 mph or more

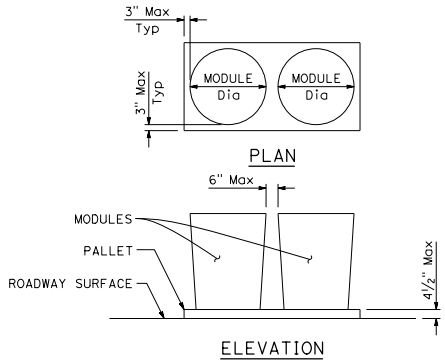

CRASH CUSHION PALLET DETAIL

NOTES:

1. (XXX) Indicates sand filled module location and weight of sand in pounds for each module. Module spacing is based on the greater diameter of the modules.
2. All sand weights are nominal. Sand must contain no more than 7 percent water.
3. Refer to Standard Plan A73B for marker details.
4. Approach speeds indicated conform to NCHRP Report 350 criteria.

STATE OF CALIFORNIA
DEPARTMENT OF TRANSPORTATION

TEMPORARY CRASH CUSHION SAND FILLED (BIDIRECTIONAL)

NO SCALE

T1B

2026 STANDARD PLAN T1B

7-1-26

Return to Table of Contents

Dist	COUNTY	ROUTE	POST MILES TOTAL PROJECT	SHEET No.	TOTAL SHEETS

Jawad Naderi
REGISTERED CIVIL ENGINEER

September 18, 2026
PLANS APPROVAL DATE

REGISTERED PROFESSIONAL ENGINEER
Mohammad Jawad Naderi
No. C96340
Exp. 9-30-26
CIVIL
STATE OF CALIFORNIA

THE STATE OF CALIFORNIA OR ITS OFFICERS OR AGENTS SHALL NOT BE RESPONSIBLE FOR THE ACCURACY OR COMPLETENESS OF SCANNED COPIES OF THIS PLAN SHEET.

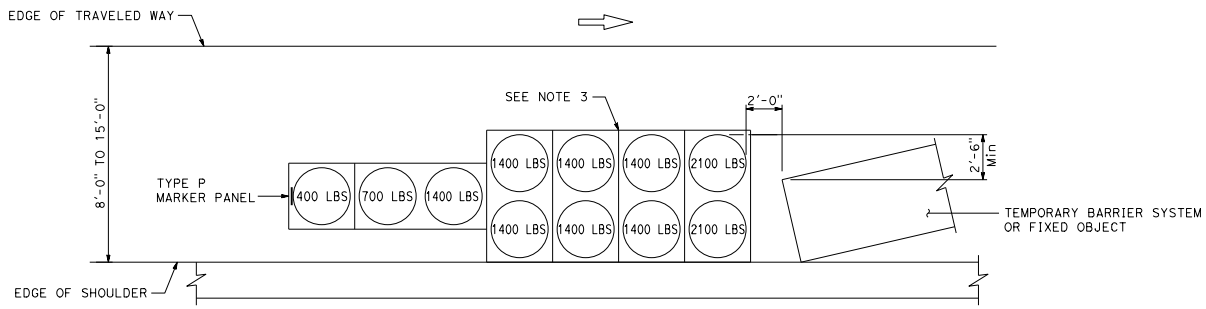

ARRAY 'TS11'

Approach speed less than 45 mph, see Note 6

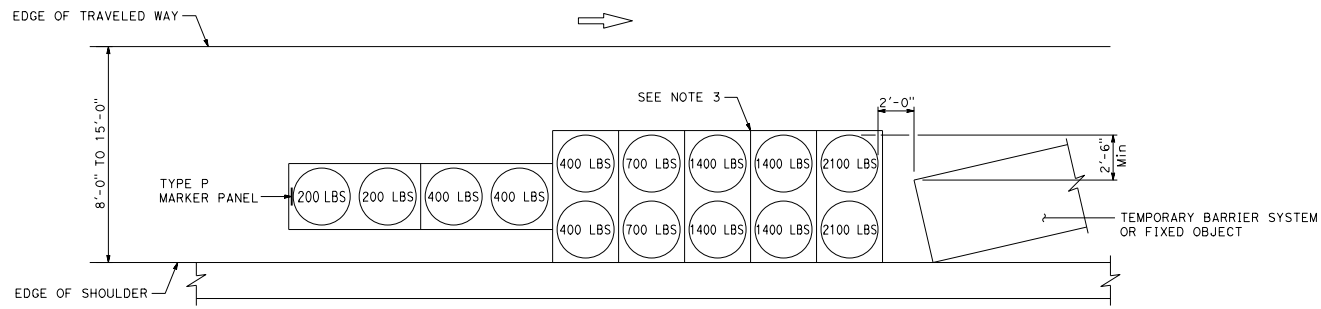

ARRAY 'TS14'

Approach speed 45 mph or more, see Note 6

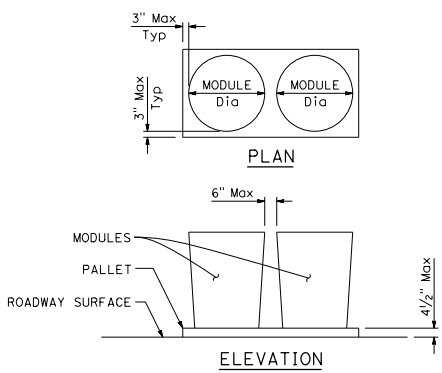

CRASH CUSHION PALLET DETAIL

NOTES:

1. (XXX) Indicates sand filled module location and weight of sand in pounds for each module. Module spacing is based on the greater diameter of the module.
2. All sand weights are nominal. Sand must contain no more than 7 percent water.
3. The temporary crash cushion arrays shown on this plan shall be used only in locations where there will be traffic on one side of the temporary crash cushion array.
4. Arrays for median shoulders shall conform to details shown on this plan for outside shoulders.
5. Refer to Standard Plan A73B for marker details.
6. For shoulder widths less than 8'-0", appropriate approved crash cushion protection, other than sand filled modules, shall be provided at fixed objects and at approach ends of temporary railing. The specific type of crash cushion shall be as shown on the project plans or as specified in the Special Provisions, or if not shown on the project plans or specified in the Special Provisions, shall be as approved by the Engineer.
7. Approach speeds indicated conform to NCHRP Report 350 criteria.

STATE OF CALIFORNIA
DEPARTMENT OF TRANSPORTATION

TEMPORARY CRASH CUSHION SAND FILLED (SHOULDER INSTALLATIONS)

NO SCALE

T2

2026 STANDARD PLAN T2

7-1-26

Return to Table of Contents

Dist	COUNTY	ROUTE	POST MILES TOTAL PROJECT	SHEET No.	TOTAL SHEETS

Jawad Naderi
REGISTERED CIVIL ENGINEER

September 18, 2026
PLANS APPROVAL DATE

REGISTERED PROFESSIONAL ENGINEER Mohammad Jawad Naderi No. C96340 Exp. 9-30-26 CIVIL STATE OF CALIFORNIA

THE STATE OF CALIFORNIA OR ITS OFFICERS OR AGENTS SHALL NOT BE RESPONSIBLE FOR THE ACCURACY OR COMPLETENESS OF SCANNED COPIES OF THIS PLAN SHEET.

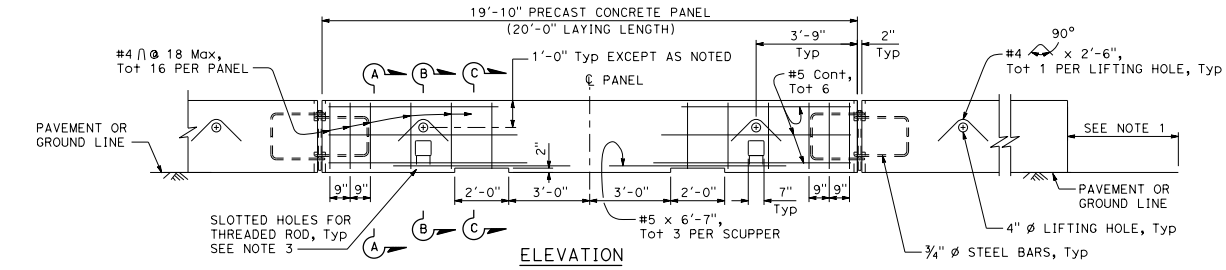

ELEVATION

TYPICAL PANEL

Weight per panel: 3.9 tons

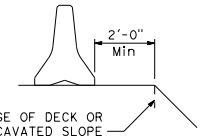

MINIMUM EDGE DISTANCE

See Note 3

NOTES:

1. For end treatment, layout and crash cushions, where needed, see Project Plans or Special Provisions.
2. All 3½" gaps at removable panels are to be backed at the base with #8 x 10" dowel or 1" ø pin each side of joint, see Section G-G.
3. Where the offset distance from the exposed edge of deck to the closest edge of the temporary railing is less than 2'-0", attach each panel to deck slab with 1" diameter threaded rods (total four per panel) inserted through the slotted holes of the panel and bond in drilled holes 6" deep in the deck slabs. See Bridge Design Memo 13.1.

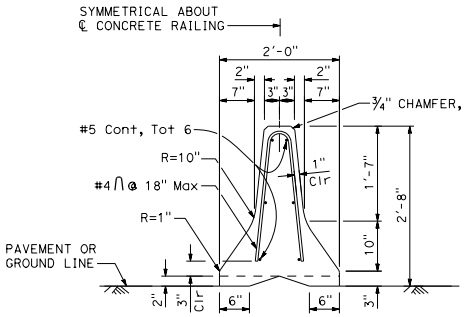

SECTION A-A

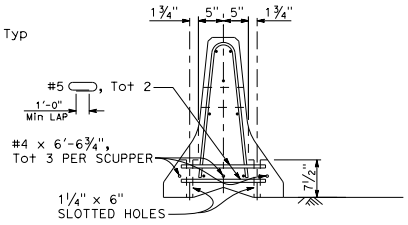

SECTION B-B

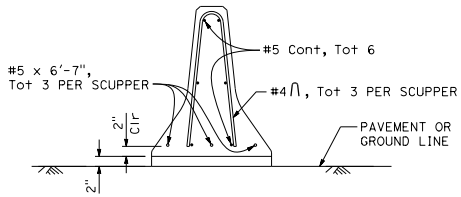

SECTION C-C

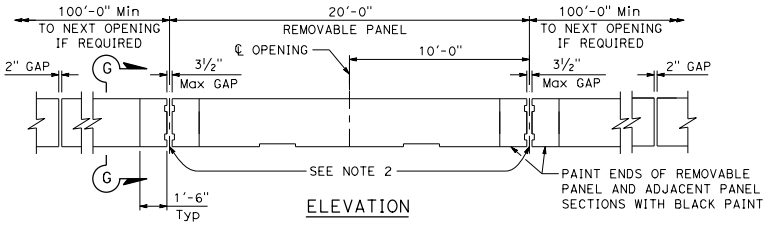

ELEVATION

TYPICAL OPENING DETAIL

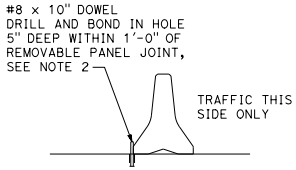

SECTION G-G*

* Section G-G is for concrete pavement. Alternative detail, 1" ø pins 2'-0" long driven in existing AC or HMA.

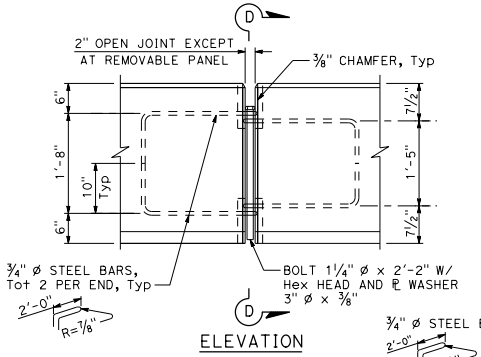

ELEVATION

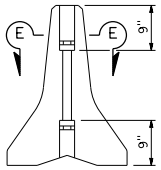

SECTION D-D

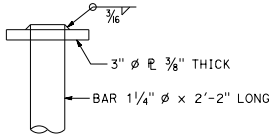

ALTERNATIVE HEAD DETAIL

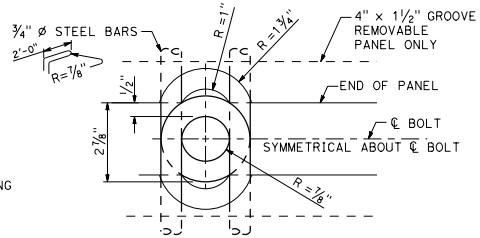

SECTION E-E

BOLT CONNECTION DETAILS

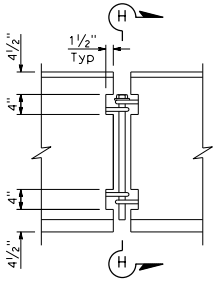

ELEVATION

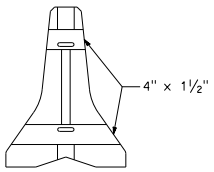

SECTION H-H

REMOVABLE PANEL GROOVE DETAILS

STATE OF CALIFORNIA
DEPARTMENT OF TRANSPORTATION

TEMPORARY RAILING (TYPE K)

NO SCALE

T3A

2026 STANDARD PLAN T3A

7-1-26

Return to Table of Contents

Dist	COUNTY	ROUTE	POST MILES TOTAL PROJECT	SHEET No.	TOTAL SHEETS

Jawad Naderi
REGISTERED CIVIL ENGINEER

September 18, 2026
PLANS APPROVAL DATE

REGISTERED PROFESSIONAL ENGINEER
Mohammad Jawad Naderi
No. C96340
Exp. 9-30-26
CIVIL
STATE OF CALIFORNIA

THE STATE OF CALIFORNIA OR ITS OFFICERS OR AGENTS SHALL NOT BE RESPONSIBLE FOR THE ACCURACY OR COMPLETENESS OF SCANNED COPIES OF THIS PLAN SHEET.

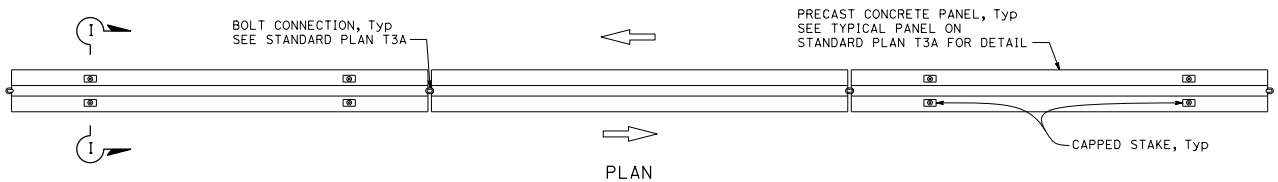

PLAN

RAILING STAKING CONFIGURATION FOR TWO-WAY TRAFFIC

See Note 2

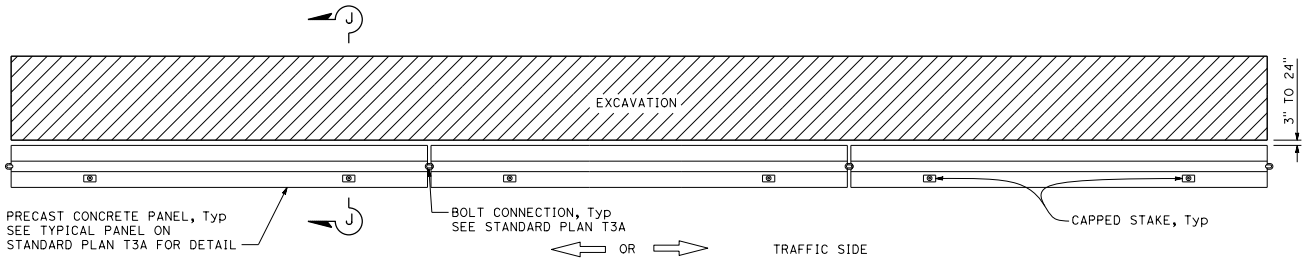

PLAN

RAILING STAKING CONFIGURATION ADJACENT TO AN EXCAVATION

See Note 3

NOTES:

1. Where Type K temporary railing is placed on curves and radii that are too severe to connect panels with bolted joints, the railing must be backed continuously with earth fill, see Section F-F.
2. Where Type K temporary railing is placed as a temporary or long term barrier in two-way traffic on highways with less than 24" from the edge of traveled way, use four capped stakes per every other panel with end panels staked.
3. Where Type K temporary railing is placed 3" to 24" from the edge of an excavation on highways, use two capped stakes per panel along the traffic side.
4. Staked Type K temporary railing must be supported by at least 4" thick concrete, hot mix asphalt or existing asphalt concrete pavement.
5. The minimum yield strength for the washer must be 60,000 psi.

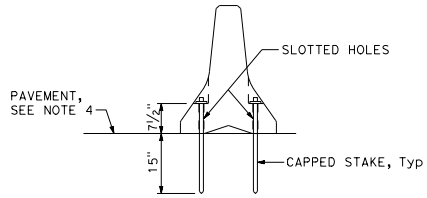

SECTION I-I

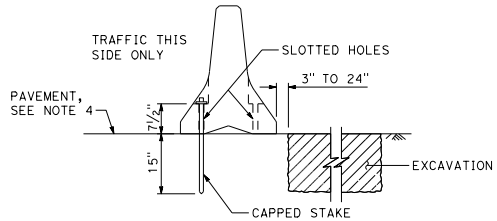

SECTION J-J

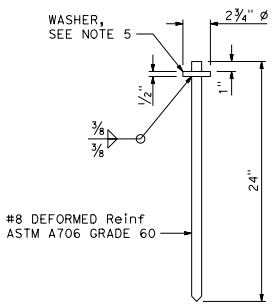

CAPPED STAKE DETAIL

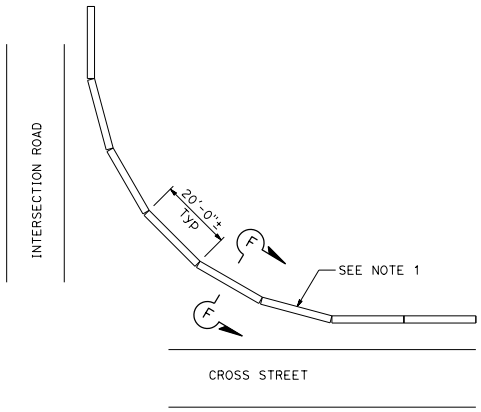

CURVED LAYOUT

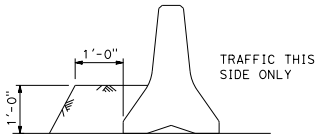

SECTION F-F

See Note 1

STATE OF CALIFORNIA
DEPARTMENT OF TRANSPORTATION

TEMPORARY RAILING (TYPE K)

NO SCALE

T3B

2026 STANDARD PLAN T3B

7-1-26

Return to Table of Contents

Dist	COUNTY	ROUTE	POST MILES TOTAL PROJECT	SHEET No.	TOTAL SHEETS

Jawad Naderi
REGISTERED CIVIL ENGINEER

September 18, 2026
PLANS APPROVAL DATE

REGISTERED PROFESSIONAL ENGINEER
Mohammad Jawad Naderi
No. C96340
Exp. 9-30-26
CIVIL
STATE OF CALIFORNIA

THE STATE OF CALIFORNIA OR ITS OFFICERS OR AGENTS SHALL NOT BE RESPONSIBLE FOR THE ACCURACY OR COMPLETENESS OF SCANNED COPIES OF THIS PLAN SHEET.

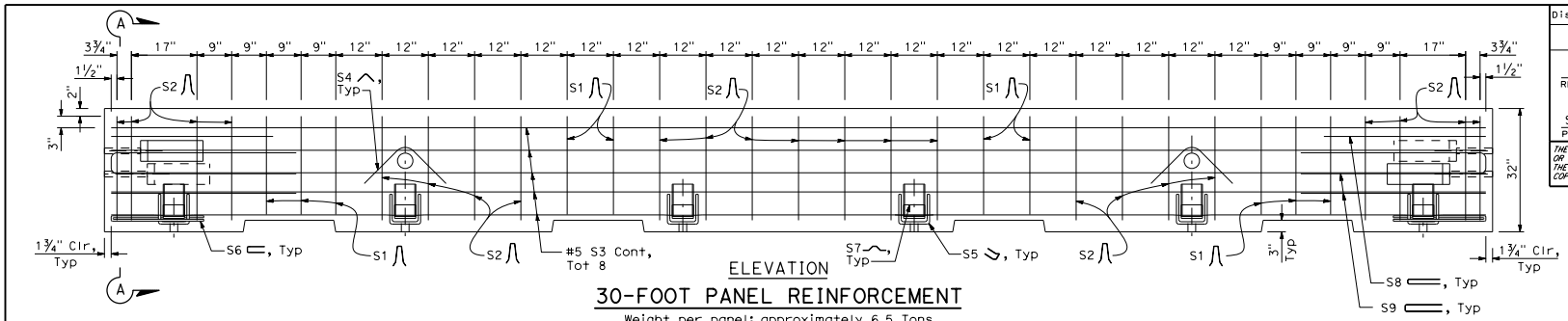

ELEVATION

30-FOOT PANEL REINFORCEMENT

Weight per panel: approximately 6.5 Tons

NOTES:

1. For Section A-A and Section C-C, see Standard Plan T3D.
2. For Section B-B, see Standard Plan T3E.

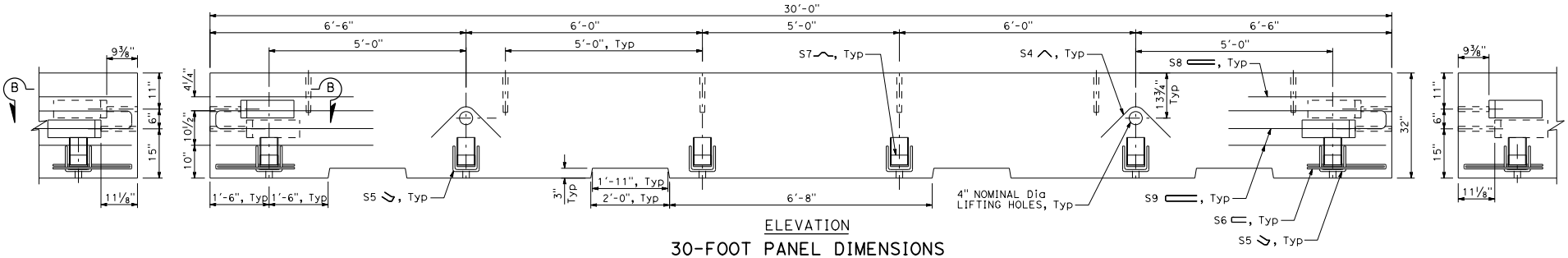

ELEVATION

30-FOOT PANEL DIMENSIONS

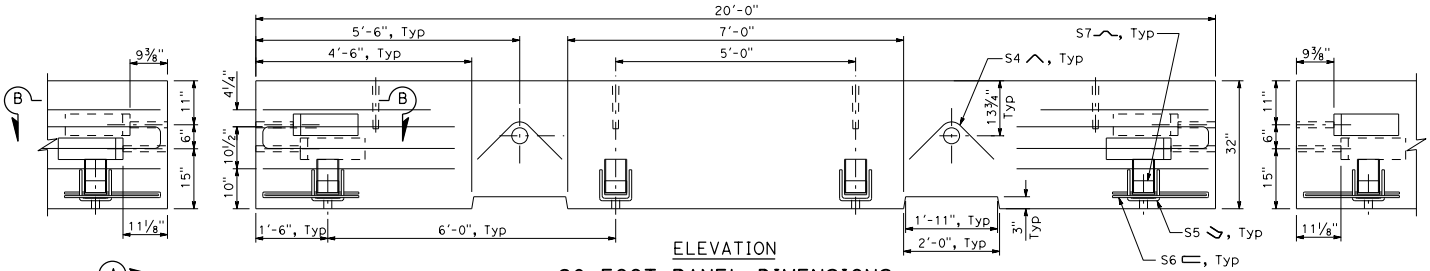

ELEVATION

20-FOOT PANEL DIMENSIONS

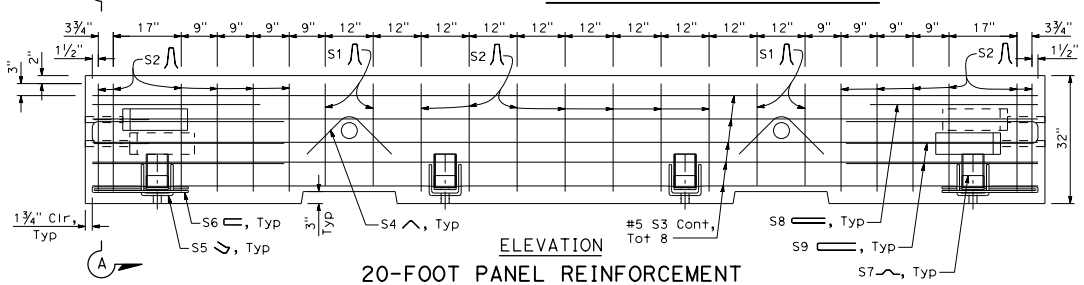

ELEVATION

20-FOOT PANEL REINFORCEMENT

Weight per panel: approximately 4.5 Tons

STATE OF CALIFORNIA
DEPARTMENT OF TRANSPORTATION

TEMPORARY BARRIER SYSTEM (CROSS BOLT)

NO SCALE

T3C

2026 STANDARD PLAN T3C

7-1-26

Return to Table of Contents

Dist	COUNTY	ROUTE	POST MILES TOTAL PROJECT	SHEET No.	TOTAL SHEETS

Jawad Naderi
REGISTERED CIVIL ENGINEER

September 18, 2026
PLANS APPROVAL DATE

REGISTERED PROFESSIONAL ENGINEER
Mohammad Jawad Naderi
No. C96340
Exp. 9-30-26
CIVIL
STATE OF CALIFORNIA

THE STATE OF CALIFORNIA OR ITS OFFICERS OR AGENTS SHALL NOT BE RESPONSIBLE FOR THE ACCURACY OR COMPLETENESS OF SCANNED COPIES OF THIS PLAN SHEET.

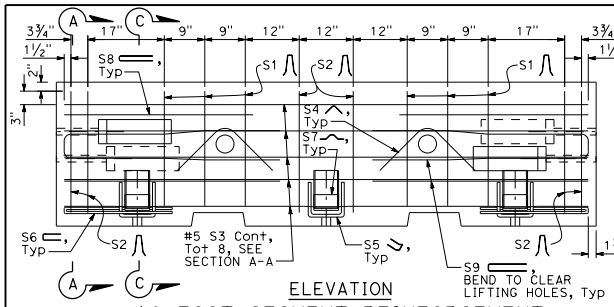

ELEVATION
10-FOOT SEGMENT REINFORCEMENT
Weight per panel: approximately 2 Tons

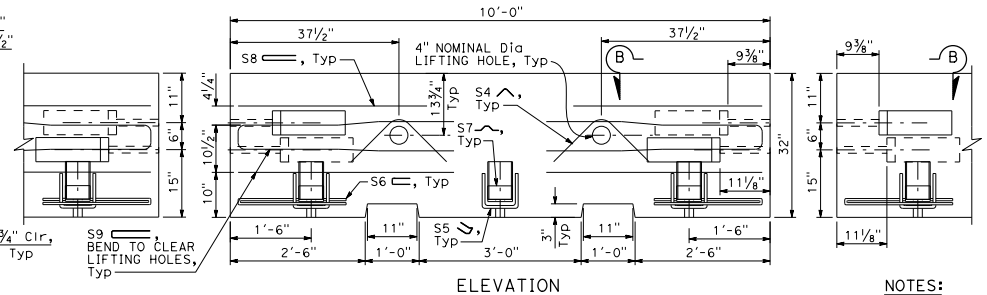

ELEVATION
10-FOOT PANEL DIMENSIONS

NOTES:
1. Steel reinforcement may be bent and WWR may be cut or bent to accommodate joint connection hardware, leave-outs, staking holes, drain holes, and lifting holes.
2. Distance from the end of the barrier to the first wire must not exceed 3 inches.
3. Steel reinforcement must have a minimum 1" concrete coverage except, no coverage is required for S5, S6, and S7 at the stake hole.
4. S5, S6, and S7 must be galvanized post fabrication.
5. For Section B-B, see Standard Plan T3E.

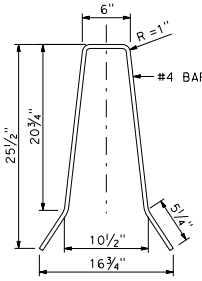

S1

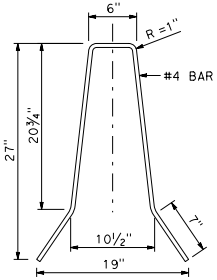

S2

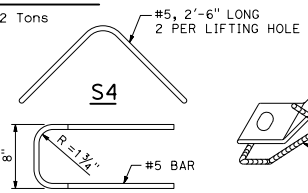

S4 PLAN

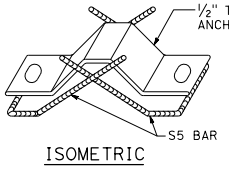

ISOMETRIC

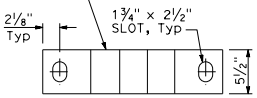

PLAN

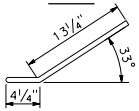

ELEVATION
S5

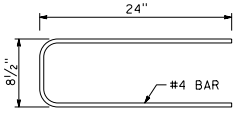

S6

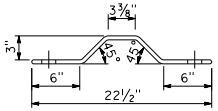

ELEVATION
S7 ANCHOR PLATE

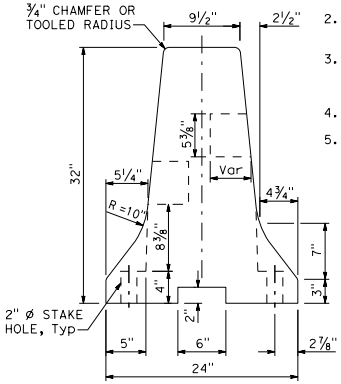

SHAPE TYPE F

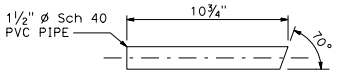

1 PER UPPER BOLT ASSEMBLY, 2 PER JOINT

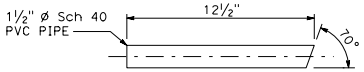

1 PER LOWER BOLT ASSEMBLY, 2 PER JOINT

CONNECTION PIPE

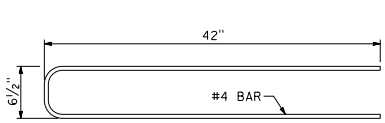

PLAN
S8

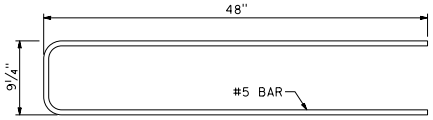

PLAN
S9

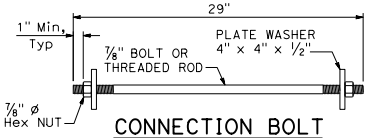

CONNECTION BOLT
1 per bolt assembly, 2 per joint

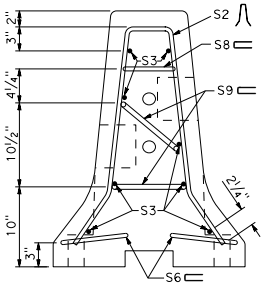

SECTION A-A

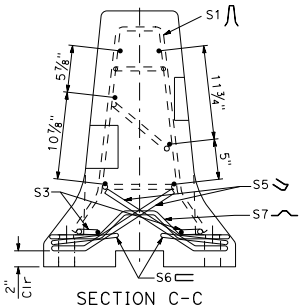

SECTION C-C

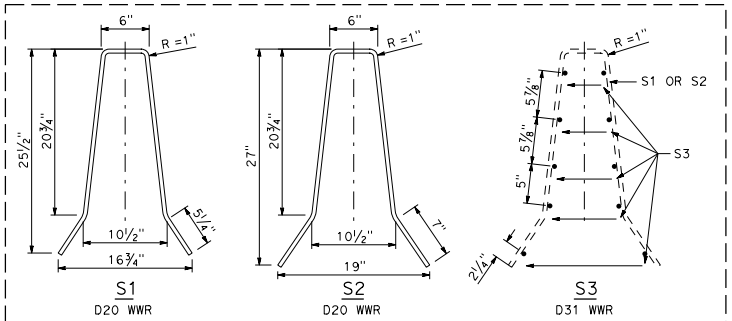

S1 D20 WWR
S2 D20 WWR
S3 D31 WWR

WELDED WIRE REINFORCEMENT (WWR)
OPTION FOR S1, S2 AND S3

STATE OF CALIFORNIA
DEPARTMENT OF TRANSPORTATION

TEMPORARY BARRIER SYSTEM (CROSS BOLT)

NO SCALE

T3D

2026 STANDARD PLAN T3D

7-1-26

Return to Table of Contents

Dist	COUNTY	ROUTE	POST MILES TOTAL PROJECT	SHEET No.	TOTAL SHEETS

Jawad Naderi
REGISTERED CIVIL ENGINEER

September 18, 2026
PLANS APPROVAL DATE

REGISTERED PROFESSIONAL ENGINEER Mohammad Jawad Naderi No. C96340 Exp. 9-30-26 CIVIL STATE OF CALIFORNIA

THE STATE OF CALIFORNIA OR ITS OFFICERS OR AGENTS SHALL NOT BE RESPONSIBLE FOR THE ACCURACY OR COMPLETENESS OF SCANNED COPIES OF THIS PLAN SHEET.

NOTE:

1. For Section B-B, see Standard Plan T3C.

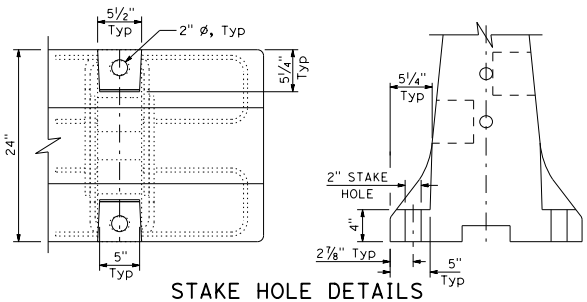

STAKE HOLE DETAILS

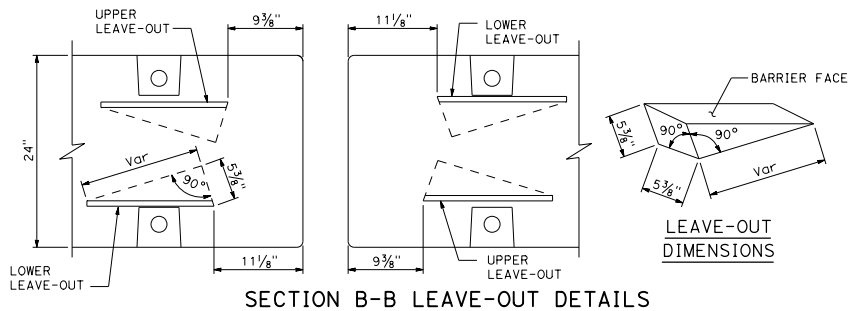

LEAVE-OUT DIMENSIONS

SECTION B-B LEAVE-OUT DETAILS

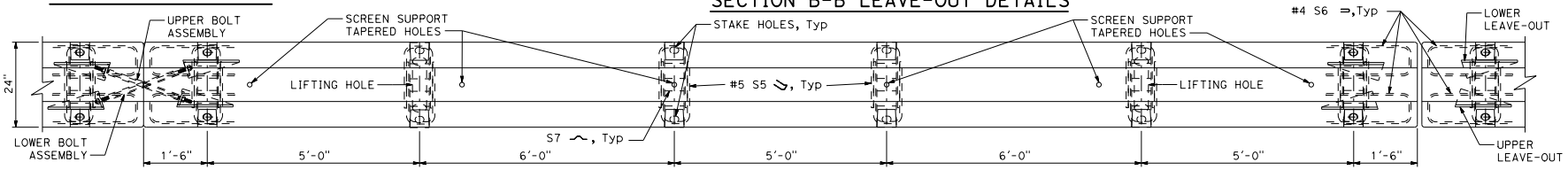

PLAN
30-FOOT PANEL

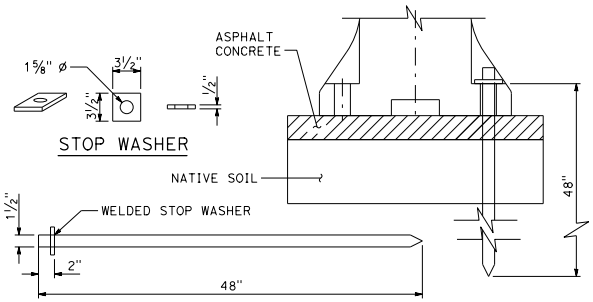

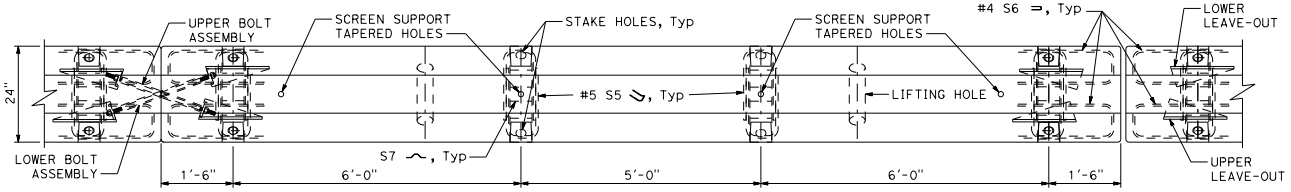

PLAN
20-FOOT PANEL

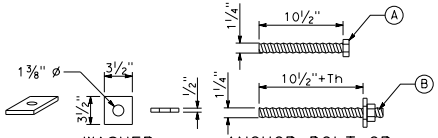

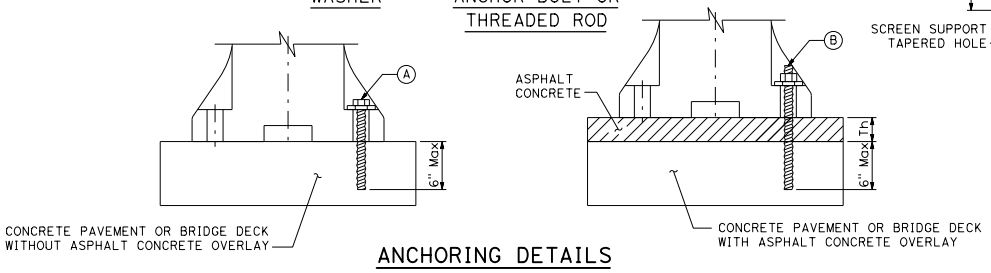

ANCHORING DETAILS

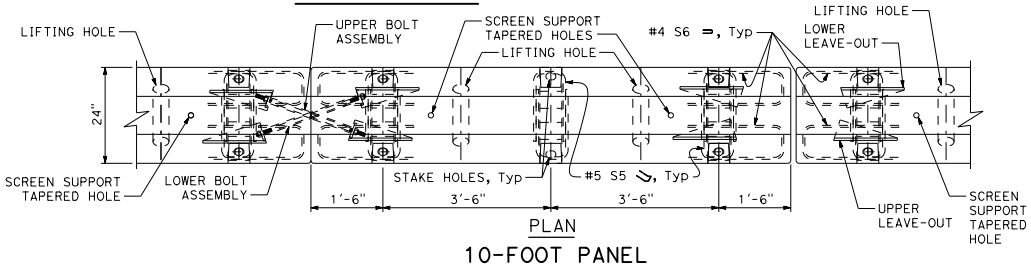

PLAN
10-FOOT PANEL

STATE OF CALIFORNIA
DEPARTMENT OF TRANSPORTATION

TEMPORARY BARRIER SYSTEM (CROSS BOLT)

NO SCALE

T3E

7-1-26

Return to Table of Contents

Dist	COUNTY	ROUTE	POST MILES TOTAL PROJECT	SHEET No.	TOTAL SHEETS

Jawad Naderi
REGISTERED CIVIL ENGINEER

September 18, 2026
PLANS APPROVAL DATE

REGISTERED PROFESSIONAL ENGINEER
Mohammad Jawad Naderi
No. C96340
Exp. 9-30-26
CIVIL
STATE OF CALIFORNIA

THE STATE OF CALIFORNIA OR ITS OFFICERS OR AGENTS SHALL NOT BE RESPONSIBLE FOR THE ACCURACY OR COMPLETENESS OF SCANNED COPIES OF THIS PLAN SHEET.

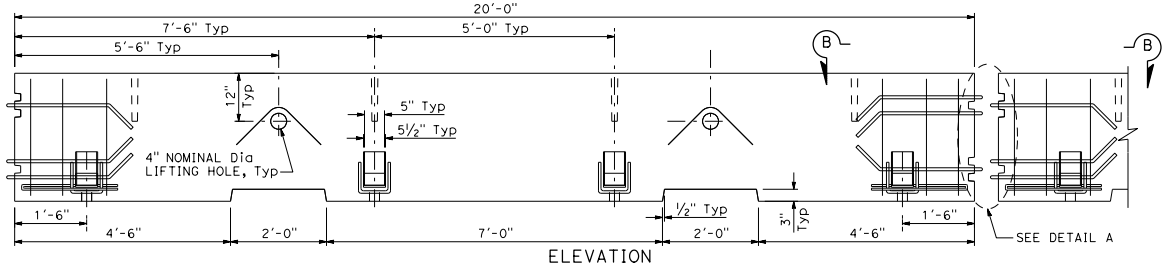

ELEVATION
20-FOOT SEGMENT DIMENSIONS

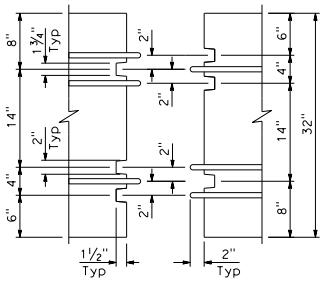

DETAIL A

NOTES:

1. Barrier segment edges must be chamfered ¾" or tooled radius.
2. Steel reinforcement must have a minimum 1" concrete coverage except, no coverage is required for S5, S6, and S7 at the stake hole.
3. Steel reinforcement may be bent to accommodate joint connection hardware, staking holes, and lifting holes.
4. A continuous steel reinforcement bar may be used instead of S10 and S11.

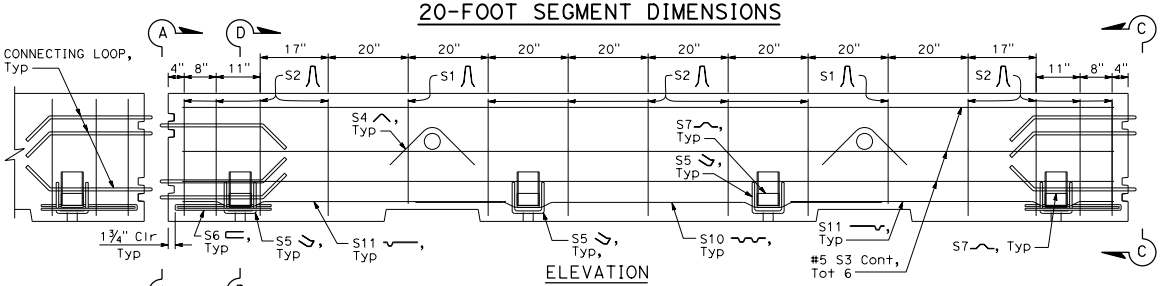

ELEVATION
20-FOOT SEGMENT REINFORCEMENT
Weight per panel: approximately 4.8 Tons

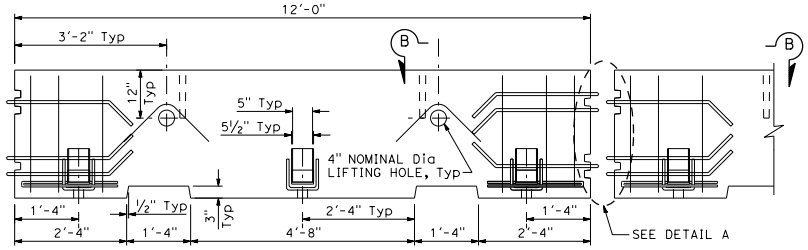

ELEVATION
12-FOOT SEGMENT DIMENSIONS

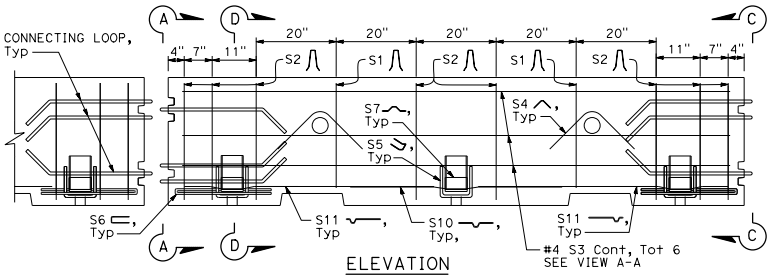

ELEVATION
12-FOOT SEGMENT REINFORCEMENT
Weight per panel: approximately 2.9 Tons

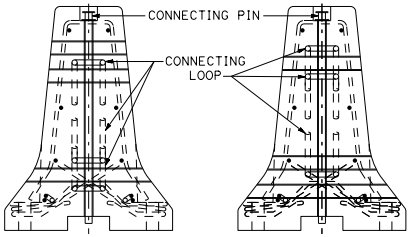

VIEW A-A VIEW C-C

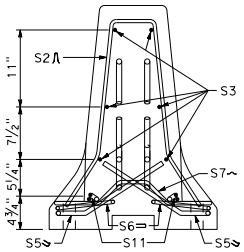

SECTION D-D

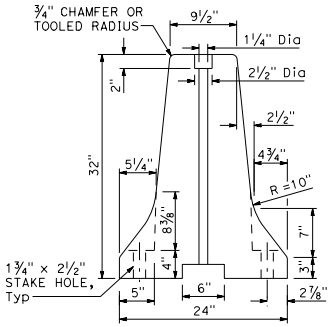

TYPICAL SECTION TYPE F
For Temporary Barrier Cal-F23

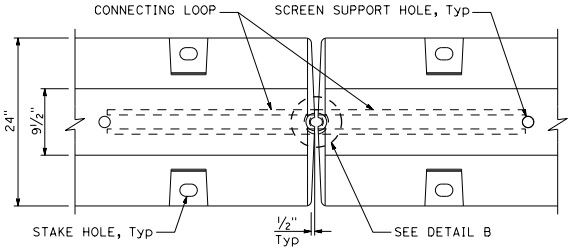

VIEW B-B

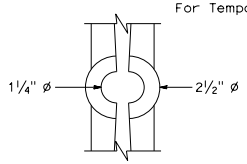

DETAIL B

STATE OF CALIFORNIA
DEPARTMENT OF TRANSPORTATION

TEMPORARY BARRIER SYSTEM (CAL F-23)
NO SCALE

T3F

2026 STANDARD PLAN T3F

7-1-26

Return to Table of Contents

Dist	COUNTY	ROUTE	POST MILES TOTAL PROJECT	SHEET No.	TOTAL SHEETS

Jawad Naderi
REGISTERED CIVIL ENGINEER

September 18, 2026
PLANS APPROVAL DATE

REGISTERED PROFESSIONAL ENGINEER
Mohammad Jawad Naderi
No. C96340
Exp. 9-30-26
CIVIL
STATE OF CALIFORNIA

THE STATE OF CALIFORNIA OR ITS OFFICERS OR AGENTS SHALL NOT BE RESPONSIBLE FOR THE ACCURACY OR COMPLETENESS OF SCANNED COPIES OF THIS PLAN SHEET.

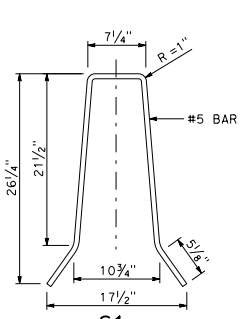

S1

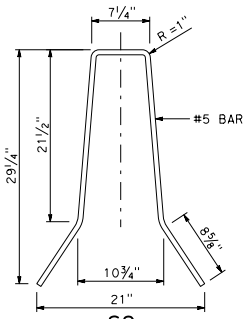

S2

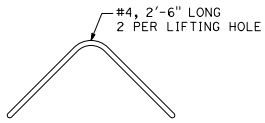

S4

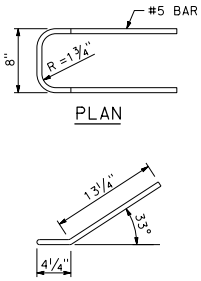

S5

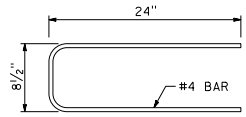

S6

NOTE:

1. Reinforcement S5, S6, and S7 must be galvanized post fabrication.

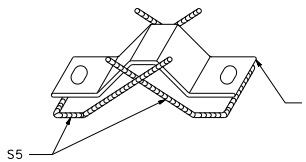

ISOMETRIC

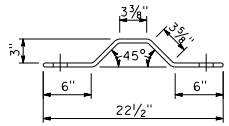

ELEVATION

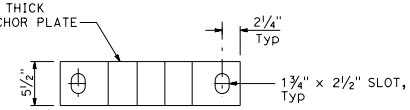

PLAN

S7 ANCHOR PLATE

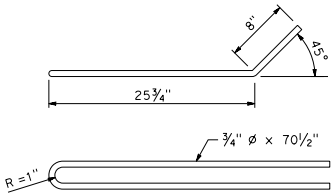

CONNECTING LOOP

3 per segment end (Total 6)

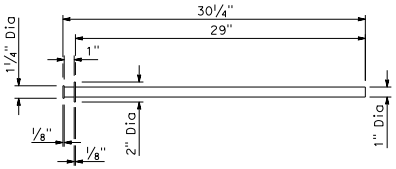

CONNECTING PIN

1 per joint

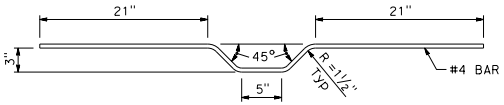

S10

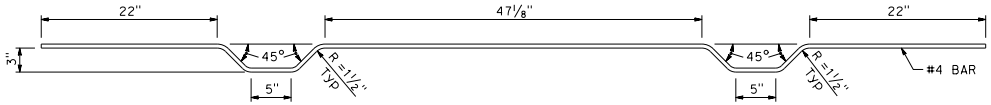

S10

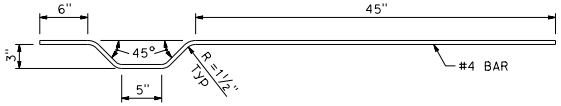

S11

12-FOOT SEGMENT

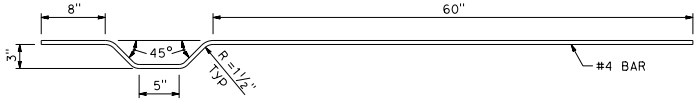

S11

20-FOOT SEGMENT

STATE OF CALIFORNIA
DEPARTMENT OF TRANSPORTATION

TEMPORARY BARRIER SYSTEM (CAL F-23)

NO SCALE

T3F2

2026 STANDARD PLAN T3F2

7-1-26

Return to Table of Contents

Dist	COUNTY	ROUTE	POST MILES TOTAL PROJECT	SHEET No.	TOTAL SHEETS

Jawad Naderi
REGISTERED CIVIL ENGINEER

September 18, 2026
PLANS APPROVAL DATE

REGISTERED PROFESSIONAL ENGINEER
Mohammad Jawad Naderi
No. C96340
Exp. 9-30-26
CIVIL
STATE OF CALIFORNIA

THE STATE OF CALIFORNIA OR ITS OFFICERS OR AGENTS SHALL NOT BE RESPONSIBLE FOR THE ACCURACY OR COMPLETENESS OF SCANNED COPIES OF THIS PLAN SHEET.

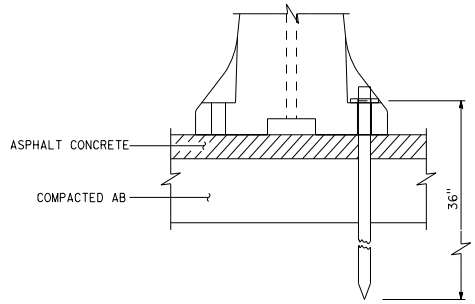

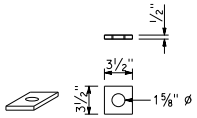

WELDED WASHER (RIM)

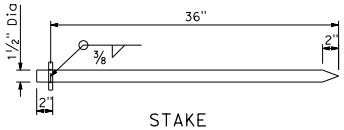

STAKE

STAKE DETAILS

NOTES:

1. Maintain a minimum 1½" clearance from bottom for bridge decks.
2. Staked temporary barrier systems must be supported by a minimum 4" thick asphalt concrete or existing asphalt concrete pavement.

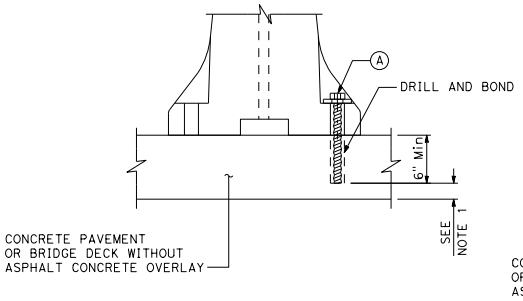

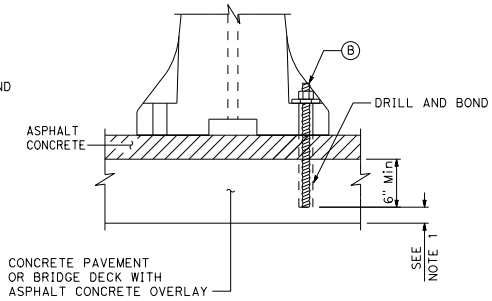

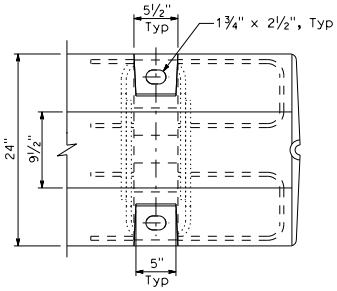

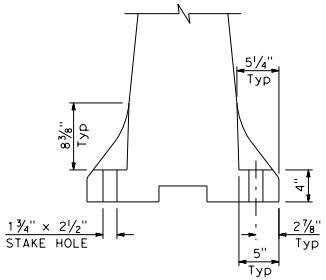

STAKE HOLE DETAILS

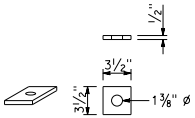

WASHER

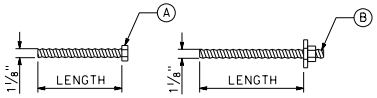

ANCHOR BOLT OR THREADED ROD

ANCHOR DETAILS

STATE OF CALIFORNIA
DEPARTMENT OF TRANSPORTATION

TEMPORARY BARRIER SYSTEM (STAKING OR ANCHORING)

NO SCALE

T3G

2026 STANDARD PLAN T3G

7-1-26

Return to Table of Contents

Dist	COUNTY	ROUTE	POST MILES TOTAL PROJECT	SHEET No.	TOTAL SHEETS

Jawad Naderi
REGISTERED CIVIL ENGINEER

September 18, 2026
PLANS APPROVAL DATE

REGISTERED PROFESSIONAL ENGINEER
Mohammad Jawad Naderi
No. C96340
Exp. 9-30-26
CIVIL
STATE OF CALIFORNIA

THE STATE OF CALIFORNIA OR ITS OFFICERS OR AGENTS SHALL NOT BE RESPONSIBLE FOR THE ACCURACY OR COMPLETENESS OF SCANNED COPIES OF THIS PLAN SHEET.

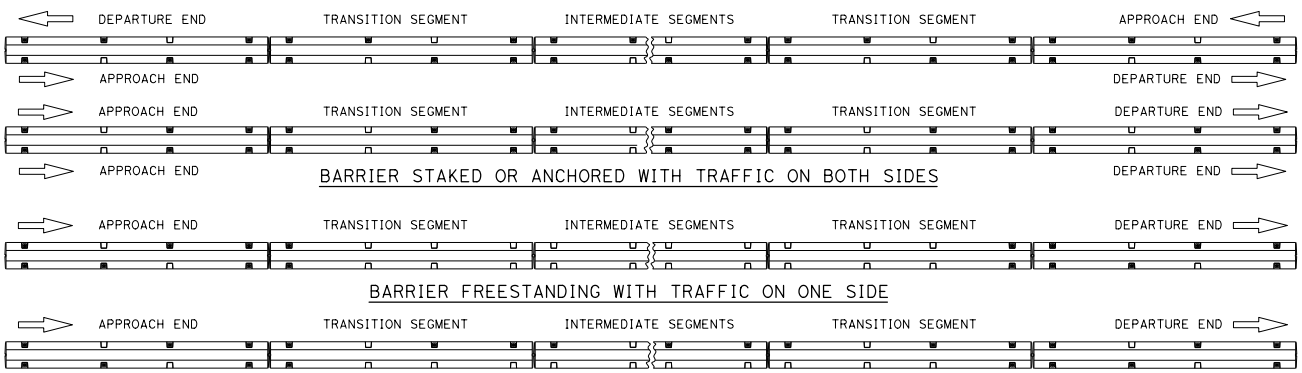

20-FOOT CROSS BOLT OR CAL F-23

NOTE:

1. Staked temporary barrier systems must be supported by a minimum 4" thick asphalt concrete or existing asphalt concrete pavement.

LEGEND

- • STAKE OR ANCHOR
- ⇨ DIRECTION OF TRAFFIC

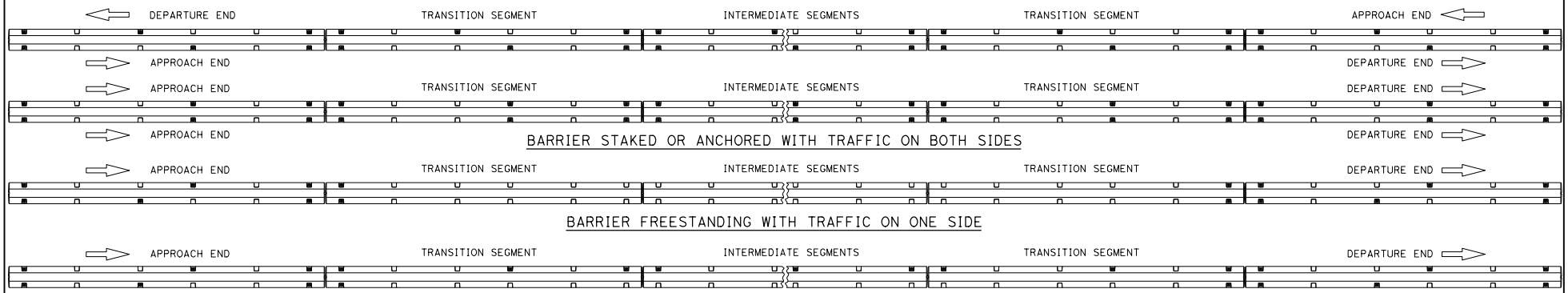

30-FOOT CROSS BOLT

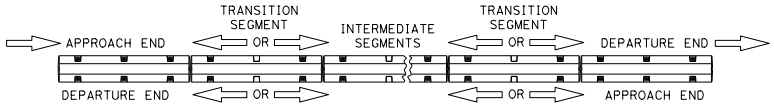

BARRIER STAKED OR ANCHORED WITH TRAFFIC ON BOTH SIDES

BARRIER FREESTANDING WITH TRAFFIC ON ONE SIDE

BARRIER STAKED OR ANCHORED WITH TRAFFIC ON ONE SIDE

10-FOOT CROSS BOLT OR 12-FOOT CAL F-23

STATE OF CALIFORNIA
DEPARTMENT OF TRANSPORTATION

TEMPORARY BARRIER SYSTEM (STAKING OR ANCHORING)

NO SCALE

T3G2

2026 STANDARD PLAN T3G2

7-1-26

Return to Table of Contents

Dist	COUNTY	ROUTE	POST MILES TOTAL PROJECT	SHEET No.	TOTAL SHEETS

Jawad Naderi
REGISTERED CIVIL ENGINEER

September 18, 2026
PLANS APPROVAL DATE

REGISTERED PROFESSIONAL ENGINEER
Mohammad Jawad Naderi
No. C96340
Exp. 9-30-26
CIVIL
STATE OF CALIFORNIA

THE STATE OF CALIFORNIA OR ITS OFFICERS OR AGENTS SHALL NOT BE RESPONSIBLE FOR THE ACCURACY OR COMPLETENESS OF SCANNED COPIES OF THIS PLAN SHEET.

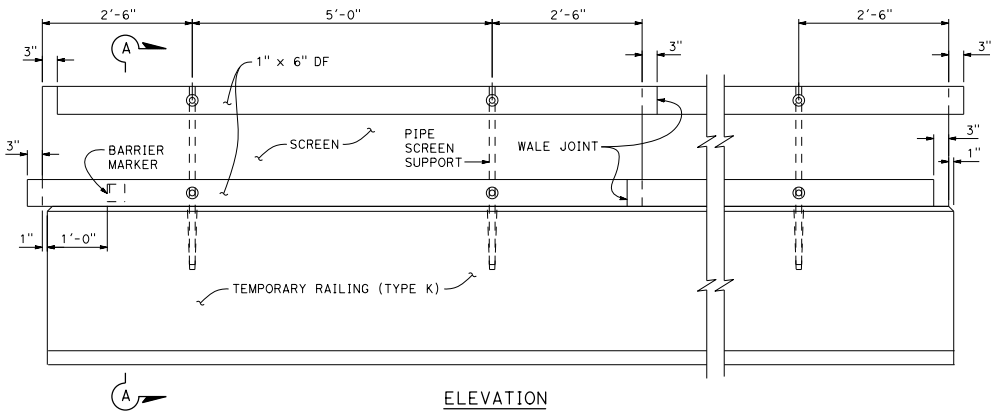

ELEVATION

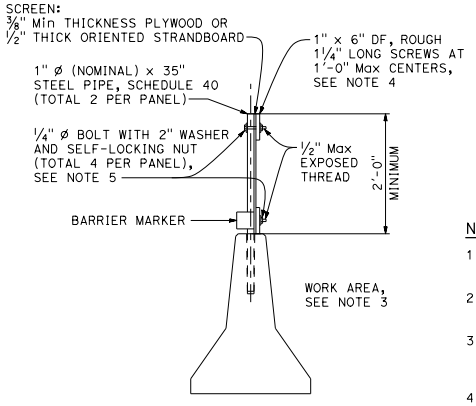

SECTION A-A

NOTES:

1. Straight holes 1 1/2" ø of the depth shown may be used in lieu of the tapered holes.
2. Resin capsule-type anchorage devices may be substituted for threaded rods.
3. Place screen on work area side of the temporary railing where traffic will only be on one side of the temporary railing.
4. Clinched 8d box nails may be substituted for screws. The nails shall be clinched on the work area side of the screen where traffic will only be on one side of the temporary railing.
5. U-bolts may be substituted for 1/4" ø bolts.
6. Barrier delineation to be used when required by the Special Provisions.

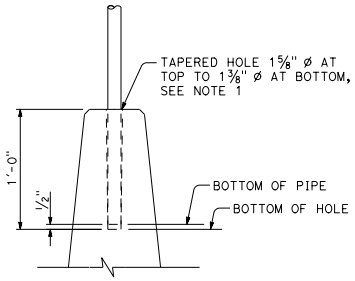

SCREEN ANCHORAGE DETAIL

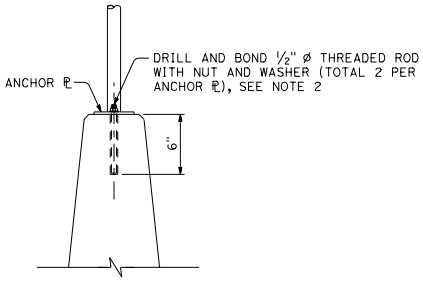

SCREEN ANCHORAGE DETAIL
ALTERNATIVE "A"

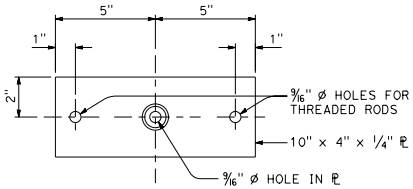

PLAN

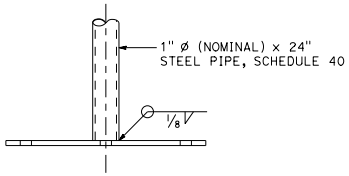

ELEVATION

ANCHOR PLATE DETAIL
ALTERNATIVE "A"

STATE OF CALIFORNIA
DEPARTMENT OF TRANSPORTATION

TEMPORARY TRAFFIC SCREEN

NO SCALE

T4

2026 STANDARD PLAN T4

7-1-26

Return to Table of Contents

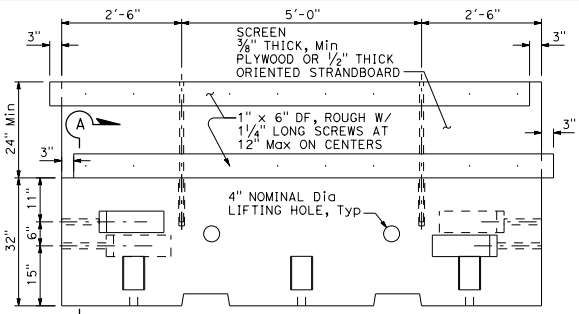

ELEVATION 10-FOOT SEGMENT

TEMPORARY TRAFFIC SCREEN (WOOD) DETAIL 2

1 Panel per barrier segment

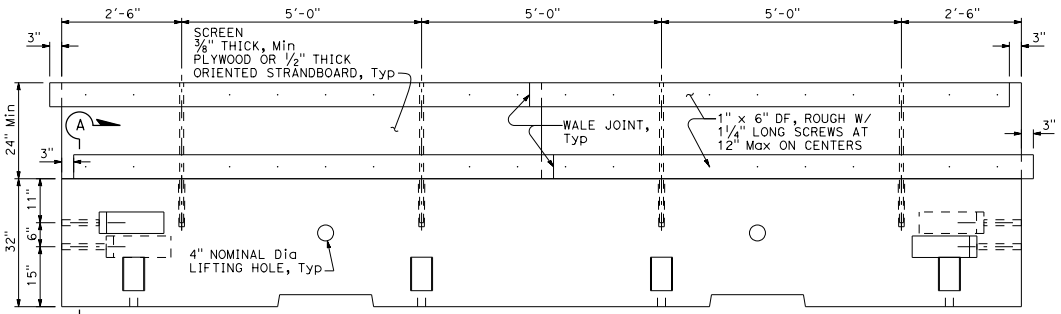

ELEVATION 20-FOOT SEGMENT

TEMPORARY TRAFFIC SCREEN (WOOD) DETAIL 1

2 Panels per barrier segment

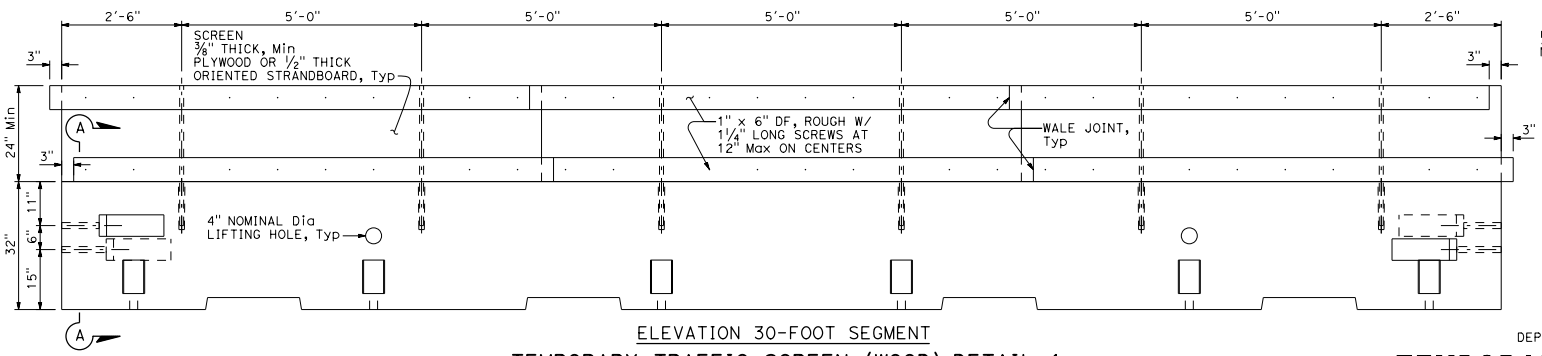

ELEVATION 30-FOOT SEGMENT

TEMPORARY TRAFFIC SCREEN (WOOD) DETAIL 1

3 Panels per barrier segment

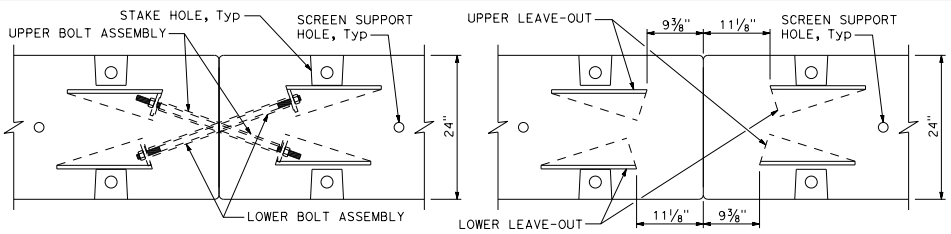

CROSS BOLT CONNECTION

SCREEN SUPPORT HOLES

SECTION B-B

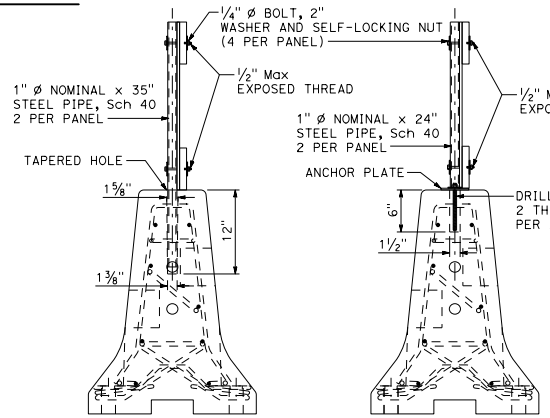

OPTION 1

OPTION 2

SCREEN ANCHORAGE

NOTE:

1. For Section A-A detail and Section B-B location, see Standard Plan T3D.

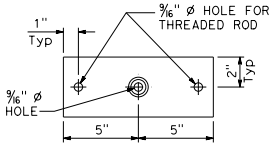

PLAN

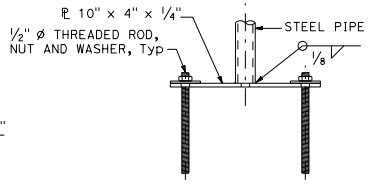

ELEVATION

ANCHOR PLATE

For screen anchorage option 2

Dist	COUNTY	ROUTE	POST MILES TOTAL PROJECT	SHEET No.	TOTAL SHEETS

Jawad Naderi
REGISTERED CIVIL ENGINEER

September 18, 2026
PLANS APPROVAL DATE

REGISTERED PROFESSIONAL ENGINEER
Mohammad Jawad Naderi
No. C96340
Exp. 9-30-26
CIVIL
STATE OF CALIFORNIA

THE STATE OF CALIFORNIA OR ITS OFFICERS OR AGENTS SHALL NOT BE RESPONSIBLE FOR THE ACCURACY OR COMPLETENESS OF SCANNED COPIES OF THIS PLAN SHEET.

STATE OF CALIFORNIA
DEPARTMENT OF TRANSPORTATION

TEMPORARY TRAFFIC SCREEN (CROSS BOLT)

NO SCALE

T4A

7-1-26

Return to Table of Contents

Dist	COUNTY	ROUTE	POST MILES TOTAL PROJECT	SHEET No.	TOTAL SHEETS

Jawad Naderi
REGISTERED CIVIL ENGINEER

September 18, 2026
PLANS APPROVAL DATE

REGISTERED PROFESSIONAL ENGINEER
Mohammad Jawad Naderi
No. C96340
Exp. 9-30-26
CIVIL
STATE OF CALIFORNIA

THE STATE OF CALIFORNIA OR ITS OFFICERS OR AGENTS SHALL NOT BE RESPONSIBLE FOR THE ACCURACY OR COMPLETENESS OF SCANNED COPIES OF THIS PLAN SHEET.

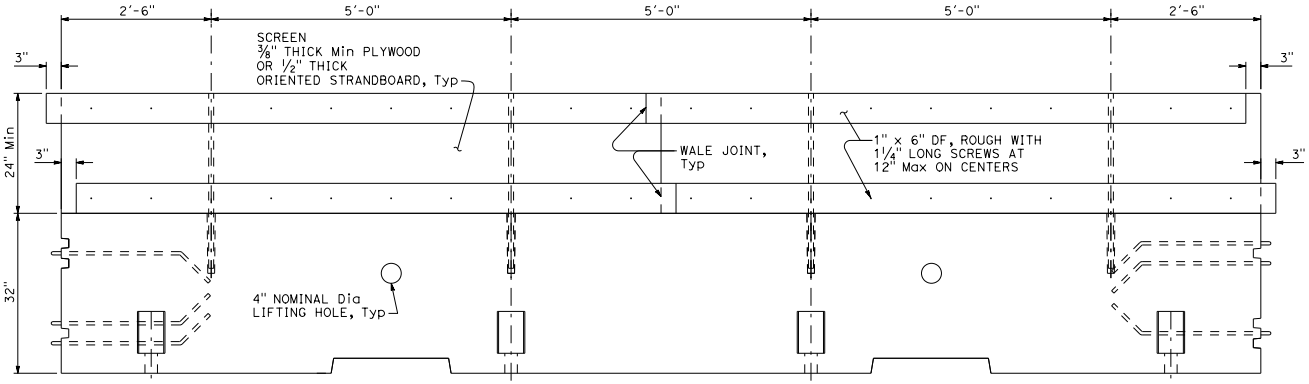

ELEVATION 20-FOOT SEGMENT

TEMPORARY TRAFFIC SCREEN (WOOD) DETAIL 1

2 Panels per barrier segment

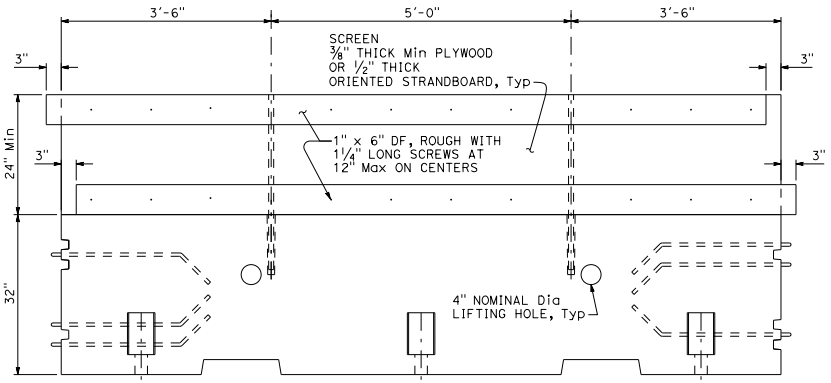

ELEVATION 12-FOOT SEGMENT

TEMPORARY TRAFFIC SCREEN (WOOD) DETAIL 2

1 Panel per barrier segment

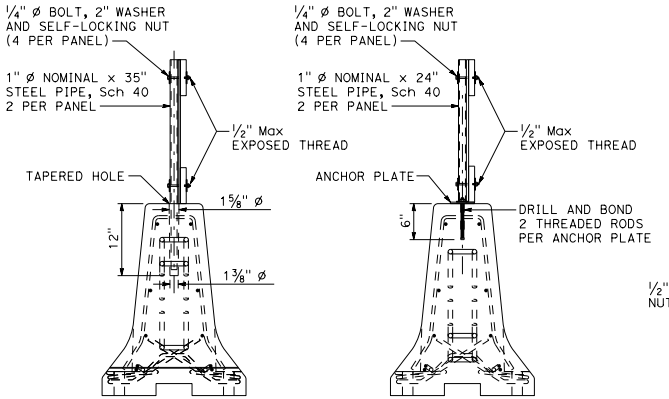

OPTION 1 OPTION 2

SCREEN ANCHORAGE

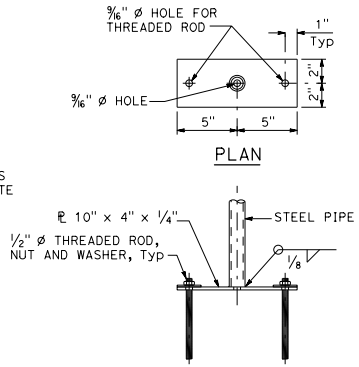

ELEVATION

ANCHOR PLATE

For screen anchorage option 2

STATE OF CALIFORNIA
DEPARTMENT OF TRANSPORTATION

TEMPORARY TRAFFIC SCREEN (CAL F-23)

NO SCALE

T4B

2026 STANDARD PLAN T4B

7-1-26

Return to Table of Contents

Dist	COUNTY	ROUTE	POST MILES TOTAL PROJECT	SHEET No.	TOTAL SHEETS

Jawad Naderi
REGISTERED CIVIL ENGINEER

September 18, 2026
PLANS APPROVAL DATE

REGISTERED PROFESSIONAL ENGINEER
Mohammad Jawad Naderi
No. C96340
Exp. 9-30-26
CIVIL
STATE OF CALIFORNIA

THE STATE OF CALIFORNIA OR ITS OFFICERS OR AGENTS SHALL NOT BE RESPONSIBLE FOR THE ACCURACY OR COMPLETENESS OF SCANNED COPIES OF THIS PLAN SHEET.

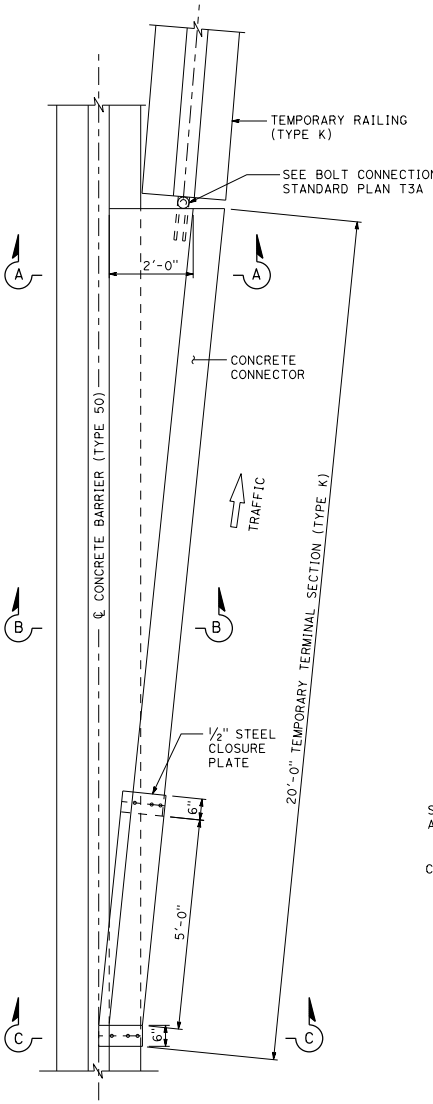

PLAN

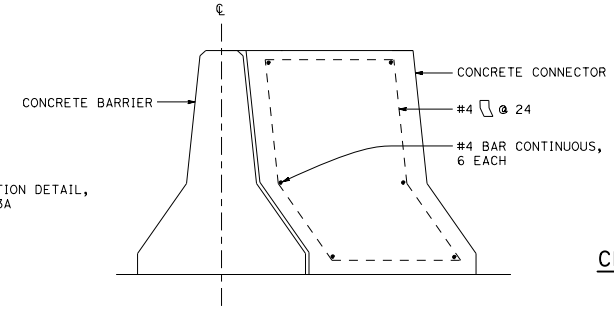

SECTION A-A

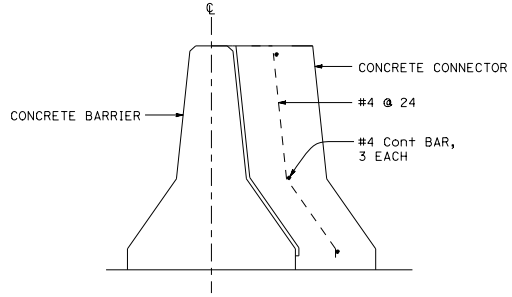

SECTION B-B

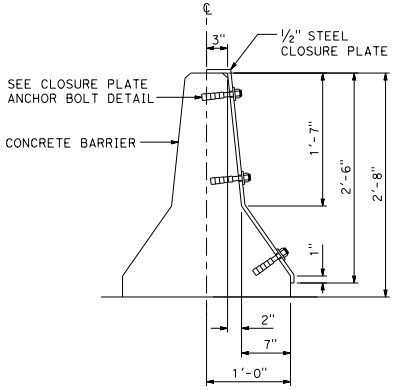

SECTION C-C

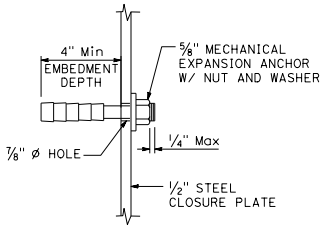

CLOSURE PLATE ANCHOR BOLT DETAIL

NOTE:

1. If lifting holes are used with the concrete connector, they shall conform to the lifting hole details shown on Standard Plan T3A.

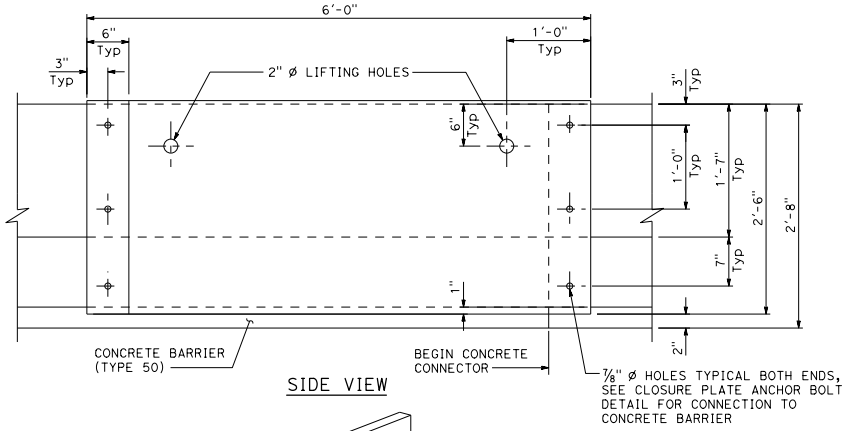

SIDE VIEW

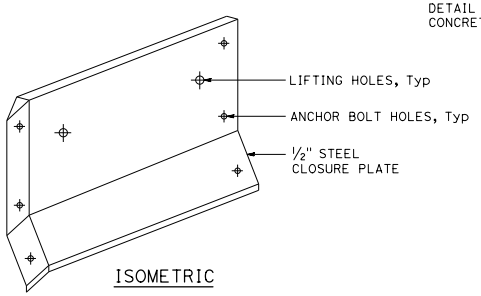

ISOMETRIC

CLOSURE PLATE

STATE OF CALIFORNIA
DEPARTMENT OF TRANSPORTATION

TEMPORARY TERMINAL SECTION (TYPE K)

NO SCALE

T5

2026 STANDARD PLAN T5

7-1-26

Return to Table of Contents

Dist	COUNTY	ROUTE	POST MILES TOTAL PROJECT	SHEET No.	TOTAL SHEETS

REGISTERED CIVIL ENGINEER

September 18, 2026
PLANS APPROVAL DATE

REGISTERED PROFESSIONAL ENGINEER
Mike Malyy
No. C83437
Exp. 3-31-27
CIVIL
STATE OF CALIFORNIA

THE STATE OF CALIFORNIA OR ITS OFFICERS OR AGENTS SHALL NOT BE RESPONSIBLE FOR THE ACCURACY OR COMPLETENESS OF SCANNED COPIES OF THIS PLAN SHEET.

NOTE:

If there are differences between Part 6 of California MUTCD and any of the Temporary Traffic Control Standard Plans, California MUTCD shall govern. The specifications and requirements for traffic control devices contained in Temporary Traffic Control Standard Plans may be more stringent (higher standard) than those in Part 6 of California MUTCD, unless they contravene or negate Standard or Guidance statements in the California MUTCD.

TABLE 1

TAPER LENGTH CRITERIA AND CHANNELIZING DEVICE SPACING

SPEED (S)	MINIMUM TAPER LENGTH * FOR WIDTH OF OFFSET 12 FEET (W)				MAXIMUM CHANNELIZING DEVICE SPACING		
					X	Y	Z **
	TANGENT 2L	MERGING L	SHIFTING L/2	SHOULDER L/3	TAPER	TANGENT	CONFLICT
mph	ft	ft	ft	ft	ft	ft	ft
20	160	80	40	27	20	40	10
25	250	125	63	42	25	50	12
30	360	180	90	60	30	60	15
35	490	245	123	82	35	70	17
40	640	320	160	107	40	80	20
45	1080	540	270	180	45	90	22
50	1200	600	300	200	50	100	25
55	1320	660	330	220	50	100	25
60	1440	720	360	240	50	100	25
65	1560	780	390	260	50	100	25
70	1680	840	420	280	50	100	25
75	1800	900	450	300	50	100	25

* - For other offsets, use the following merging taper length formula for L:
For speed of 40 mph or less, $L = WS^2/60$
For speed of 45 mph or more, $L = WS$

Where: L = Taper length in feet
W = Width of offset in feet
S = Posted speed limit, off-peak 85th-percentile speed prior to work starting, or the anticipated operating speed in mph.

** - Use for taper and tangent sections where there are no pavement markings or where there is a conflict between existing pavement markings and channelizers (CA).

TABLE 2

LONGITUDINAL BUFFER SPACE AND FLAGGER STATION SPACING

SPEED *	Min D **	DOWNGRADE Min D ***		
		-3%	-6%	-9%
mph	ft	ft	ft	ft
20	115	116	120	126
25	155	158	165	173
30	200	205	215	227
35	250	257	271	287
40	305	315	333	354
45	360	378	400	427
50	425	446	474	507
55	495	520	553	593
60	570	598	638	686
65	645	682	728	785
70	730	771	825	891
75	820	866	927	1003

* - Speed is posted speed limit, off-peak 85th-percentile speed prior to work starting, or the anticipated operating speed in mph.

** - Longitudinal buffer space or flagger station spacing

*** - Use on sustained downgrade steeper than -3% and longer than 1 mile.

TABLE 3

ADVANCE WARNING SIGN SPACING

ROAD TYPE	DISTANCE BETWEEN SIGNS*		
	A	B	C
	ft	ft	ft
URBAN - 25 mph OR LESS **	100	100	100
URBAN - 30 mph **	150	150	150
URBAN - 35 mph **	200	200	200
URBAN - 40 mph **	250	250	250
URBAN - 45 mph **	300	300	300
URBAN - 50 mph or more **	350	350	350
RURAL	500	500	500
EXPRESSWAY / FREEWAY	1000	1500	2640

* - The distances are approximate, are intended for guidance purposes only, and should be applied with engineering judgment. These distances should be adjusted by the Engineer for field conditions, if necessary, by increasing or decreasing the recommmended distances.

** - Speed is posted speed limit, off-peak 85th-percentile speed prior to work starting, or the anticipated operating speed in mph.

STATE OF CALIFORNIA
DEPARTMENT OF TRANSPORTATION

TRAFFIC CONTROL SYSTEM TABLES FOR LANE AND RAMP CLOSURES

T9

2026 STANDARD PLAN T9

7-1-26

Return to Table of Contents

SIGN PANEL SIZE (Min)	
A	48" x 48"
B	72" x 60"
C	36" x 30"

NOTES:

See Standard Plan T9 for tables.

Use cone spacing X for taper segment, Y for tangent segment or Z for conflict situations per Table 1, unless X, Y, or Z cone spacing is shown on this sheet.

Provide at least one person to continuously maintain traffic control devices for lane closures.

LEGEND

- TYPE I FLASHING ARROW SIGN
- PORTABLE FLASHING BEACON
- SUPPORT OR TRAILER
- TEMPORARY TRAFFIC CONTROL SIGN
- TRAFFIC CONE
- TRAFFIC CONE (OPTIONAL TAPER)

Dist	COUNTY	ROUTE	POST MILES TOTAL PROJECT	SHEET No.	TOTAL SHEETS

REGISTERED CIVIL ENGINEER

September 18, 2026

PLANS APPROVAL DATE

REGISTERED PROFESSIONAL ENGINEER Mike Malyy No. C83437 Exp. 3-31-27 CIVIL STATE OF CALIFORNIA

THE STATE OF CALIFORNIA OR ITS OFFICERS OR AGENTS SHALL NOT BE RESPONSIBLE FOR THE ACCURACY OR COMPLETENESS OF SCANNED COPIES OF THIS PLAN SHEET.

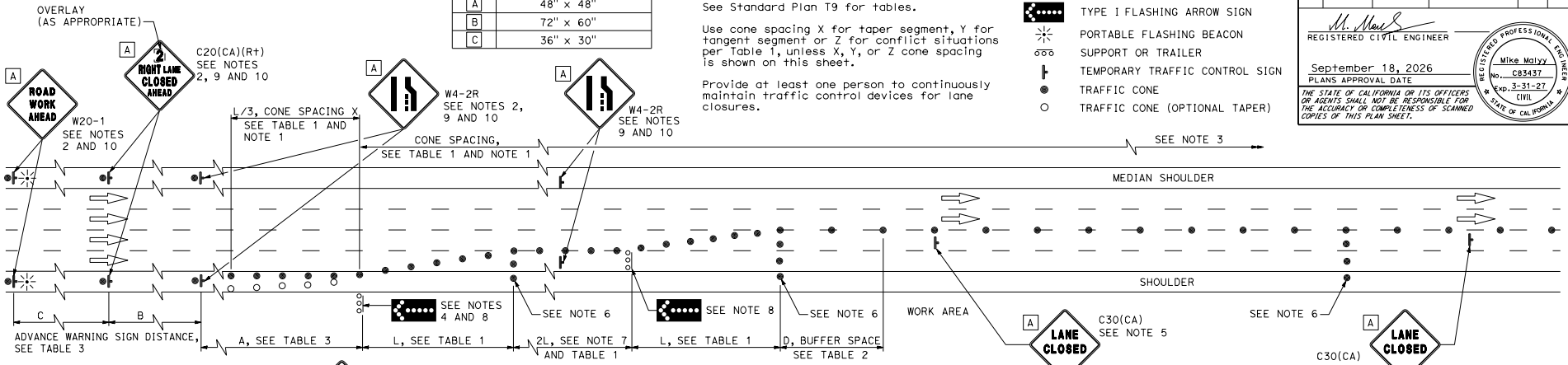

LANE CLOSURE

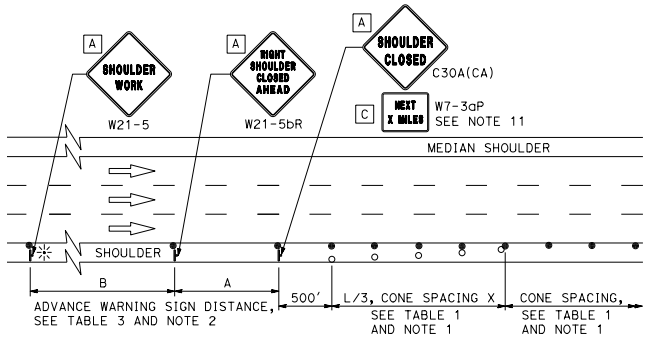

SHOULDER CLOSURE

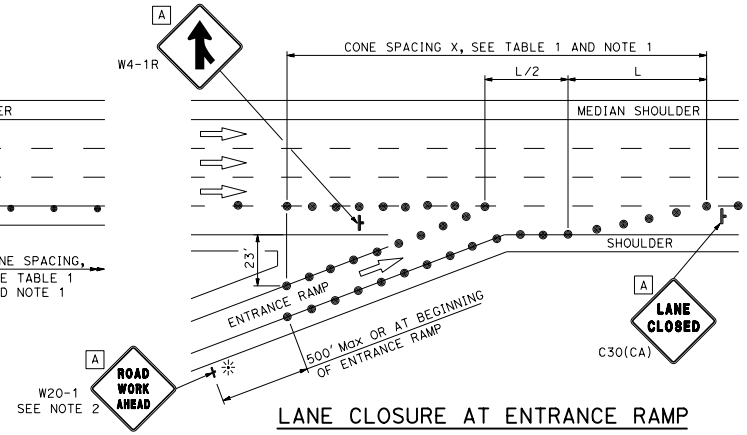

LANE CLOSURE AT ENTRANCE RAMP

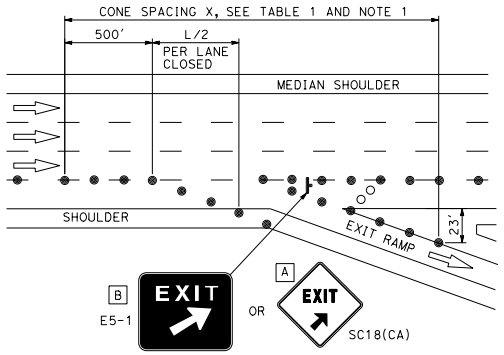

LANE CLOSURE AT EXIT RAMP

See Note 12

NOTES:

1. Portable delineators may be placed at one-half the spacing described for traffic cones, for daytime closures only.
2. Install at least two flags at each advance warning sign, for daytime closure. Flags must be at least 16" x 16" in size and must be orange or fluorescent red-orange in color. Place flashing beacons at the locations shown for lane closure during hours of darkness.
3. Place a G20-2 "END ROAD WORK" sign at the end of the lane closure unless the end of work area is obvious or ends within the limits of a larger project.
4. Provide a minimum 1500' sight distance where possible for vehicles approaching the first flashing arrow sign. Do not begin lane closures at the top of crest vertical curve or on a horizontal curve.
5. Place a C30(CA) sign every 1000' throughout the closed lane.
6. Place a minimum of 3 cones transversely across each closed lane and shoulder at each location where a taper across a traffic lane ends and every 1000' as shown. Two Type II barricades may be used instead of the 3 cones. The cones or barricades on the closed shoulder may be shifted from the transverse alignment to provide access to the work area.
7. Place the 2L tangent cones shown along lane lines between the L tapers required for each closed traffic lane.
8. Use one Type I flashing arrow sign for each lane closed.
9. Median lane closures must conform to the details shown, except use signs C20(CA)(Lt) and W4-2L.
10. Duplicate sign installations are not required:
    a) On opposite shoulder if at least one-half of the available lanes remain open to traffic.
    b) In the median if the width of the median shoulder is less than 8' and the outside lanes are to be closed.
11. Place W7-3aP "NEXT _____ MILES" plaque if the shoulder closure extends beyond the distance that can be perceived by road users.
12. See CA Manual on Uniform Traffic Control Devices Figures 6P-22 to 6P-27 for the warning sign requirements at the exit ramp, when work on the local street is shown.

STATE OF CALIFORNIA
DEPARTMENT OF TRANSPORTATION

TRAFFIC CONTROL SYSTEM FOR LANE CLOSURE ON FREEWAYS AND EXPRESSWAYS

NO SCALE

T10

7-1-26

2026 STANDARD PLAN T10

Return to Table of Contents

Dist	COUNTY	ROUTE	POST MILES TOTAL PROJECT	SHEET No.	TOTAL SHEETS

REGISTERED CIVIL ENGINEER

September 18, 2026
PLANS APPROVAL DATE

REGISTERED PROFESSIONAL ENGINEER Mike Malyy No. C83437 Exp. 3-31-27 CIVIL STATE OF CALIFORNIA

THE STATE OF CALIFORNIA OR ITS OFFICERS OR AGENTS SHALL NOT BE RESPONSIBLE FOR THE ACCURACY OR COMPLETENESS OF SCANNED COPIES OF THIS PLAN SHEET.

NOTES:

See Standard Plan T9 for tables.

Use cone spacing X for taper segment, Y for tangent segment or Z for conflict situations per Table 1, unless X, Y, or Z cone spacing is shown on this sheet.

Provide at least one person to continuously maintain traffic control devices for lane closures.

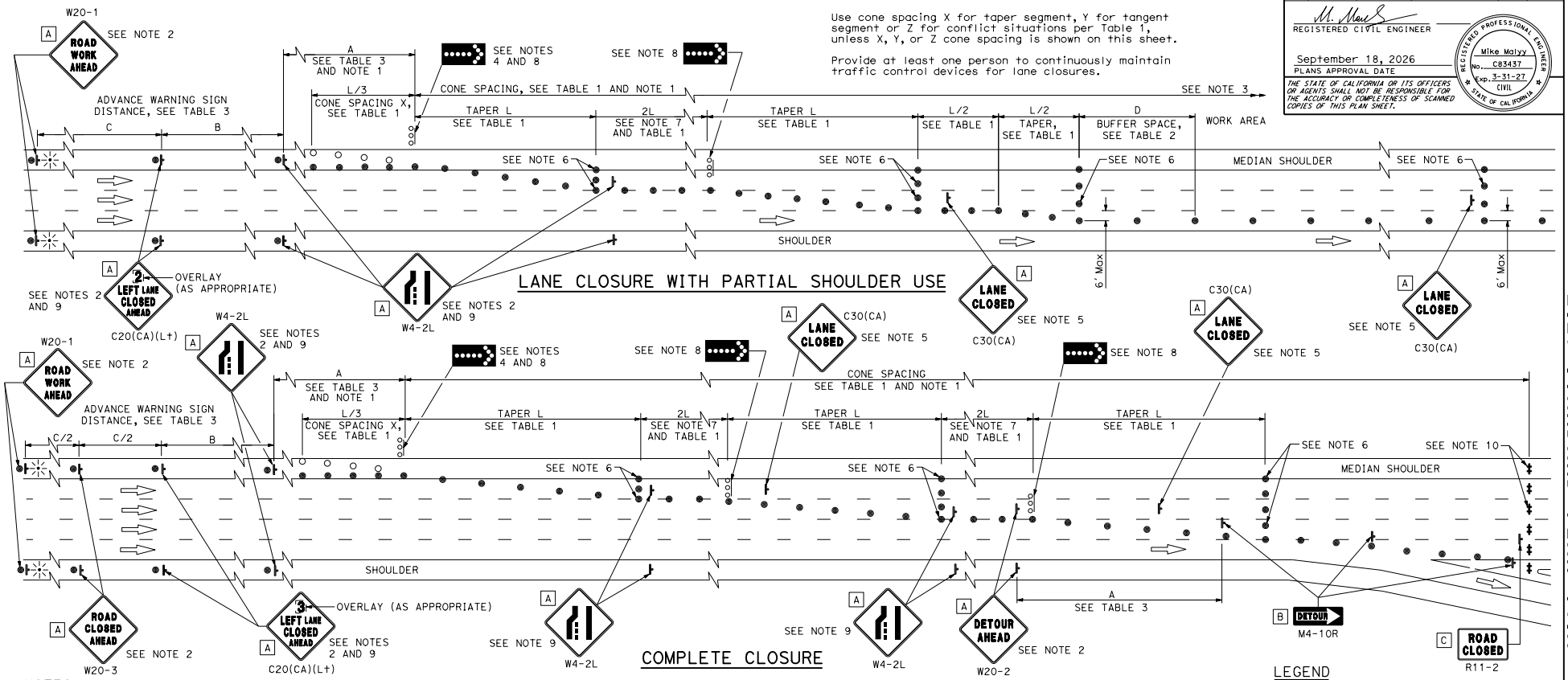

LANE CLOSURE WITH PARTIAL SHOULDER USE

COMPLETE CLOSURE

NOTES:

1. Portable delineators may be placed at one-half the spacing described for traffic cones, for daytime closures only.
2. Install at least two flags at each advance warning sign, for daytime closure. Flags must be at least 16" x 16" in size and must be orange or fluorescent red-orange in color. Place flashing beacons at the locations shown for lane closure during hours of darkness.
3. Place a G20-2 "END ROAD WORK" sign at the end of the lane closure unless the end of work area is obvious or ends within the limits of a larger project.
4. Provide a minimum 1500' sight distance where possible for vehicles approaching the first flashing arrow sign. Do not begin lane closures at the top of crest vertical curve or on a horizontal curve.
5. Place a C30(CA) sign every 1000' throughout the closed lane.
6. Place a minimum of 3 cones transversely across each closed lane and shoulder at each location where a taper across a traffic lane ends and every 1000' as shown. Two Type II barricades may be used instead of the 3 cones. The cones or barricades on the closed shoulder may be shifted from the transverse alignment to provide access to the work area.
7. Place the 2L tangent cones shown along lane lines between the L tapers required for each closed traffic lane.
8. Use one Type I flashing arrow sign for each lane closed.
9. Lane closures on the right side using partial median shoulder as a traffic lane must conform to the details shown except use signs C20(CA)(Rt) and W4-2R.
10. Place a minimum of two Type II or III barricades across each closed lane and shoulder at the location shown and every 2000' within the work area. The barricades on the closed shoulder may be shifted from the transverse alignment to provide access to the work area.

SIGN PANEL SIZE (Min)	
A	48" x 48"
B	48" x 18"
C	48" x 30"

LEGEND

- TYPE I FLASHING ARROW SIGN
- PORTABLE FLASHING BEACON
- SUPPORT OR TRAILER
- TEMPORARY TRAFFIC CONTROL SIGN
- TRAFFIC CONE
- TRAFFIC CONE (OPTIONAL TAPER)

STATE OF CALIFORNIA
DEPARTMENT OF TRANSPORTATION

TRAFFIC CONTROL SYSTEM FOR LANE CLOSURE ON FREEWAYS AND EXPRESSWAYS

NO SCALE

T10A

7-1-26

2026 STANDARD PLAN T10A

Return to Table of Contents

Dist	COUNTY	ROUTE	POST MILES TOTAL PROJECT	SHEET No.	TOTAL SHEETS

REGISTERED CIVIL ENGINEER

September 18, 2026
PLANS APPROVAL DATE

REGISTERED PROFESSIONAL ENGINEER
Mike Malyy
No. C83437
Exp. 3-31-27
CIVIL
STATE OF CALIFORNIA

THE STATE OF CALIFORNIA OR ITS OFFICERS OR AGENTS SHALL NOT BE RESPONSIBLE FOR THE ACCURACY OR COMPLETENESS OF SCANNED COPIES OF THIS PLAN SHEET.

SIGN PANEL SIZE (Min)	
A	48" x 48"
B	36" x 18"
C	30" x 30"

LEGEND:

- TYPE I FLASHING ARROW SIGN
- PORTABLE FLASHING BEACON
- SUPPORT OR TRAILER
- TEMPORARY TRAFFIC CONTROL SIGN
- TRAFFIC CONE
- TRAFFIC CONE (OPTIONAL TAPER)

NOTES:

See Standard Plan T9 for tables.

Use cone spacing X for taper segment, Y for tangent segment or Z for conflict situations per Table 1, unless X, Y, or Z cone spacing is shown on this sheet.

Provide at least one person to continuously maintain traffic control devices for lane closures.

NOTES:

1. Portable delineators may be placed at one-half the spacing described for traffic cones, for daytime closures only.
2. Install at least two flags at each advance warning sign, for daytime closure. Flags must be at least 16" x 16" in size and must be orange or fluorescent red-orange in color. Place flashing beacons at the locations shown for lane closure during hours of darkness.
3. Place a G20-2 "END ROAD WORK" sign at the end of the lane closure unless the end of work area is obvious or ends within the limits of a larger project.
4. Provide a minimum 1500′ sight distance for vehicles approaching the first flashing arrow sign, where feasible. Do not begin lane closures at the crest of vertical curves and horizontal curves.
5. Place C30(CA) "LANE CLOSED" sign at 500-foot to 1000-foot intervals throughout the closed lane.
6. The Engineer may authorize a reduced length to address site conditions.
7. Place median lane closures as shown except, use signs C20(CA)(Lt) and W4-2L.
8. Use the "Traffic Control System for Lane Closure on Freeways and Expressways", for approach speeds over 50 mph.
9. Place a minimum of 3 cones transversely across each closed lane and shoulder at each location where a taper across a traffic lane ends and every 1000′ as shown. Two Type II barricades may be used instead of the 3 cones. The cones or barricades on the closed shoulder may be shifted from the transverse alignment to provide access to the work area.

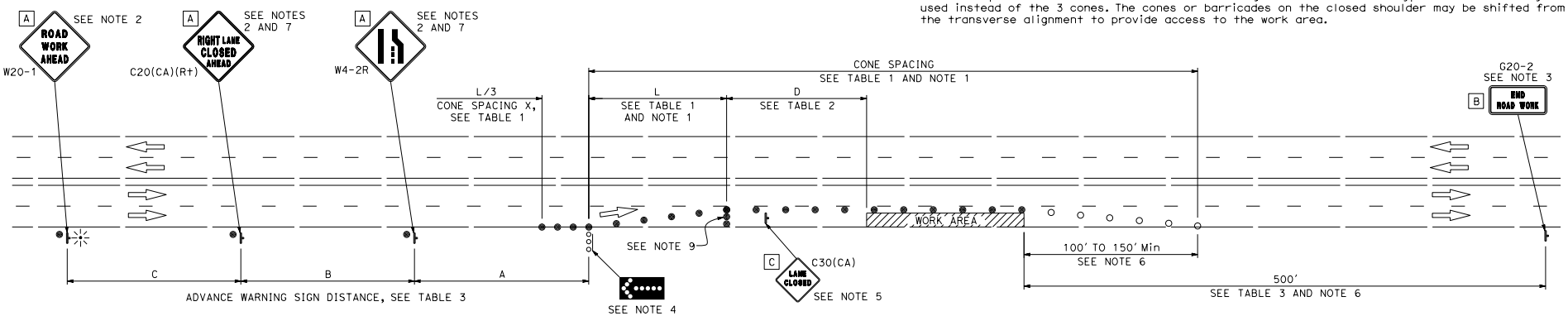

TYPICAL LANE CLOSURE

STATE OF CALIFORNIA
DEPARTMENT OF TRANSPORTATION

TRAFFIC CONTROL SYSTEM FOR LANE CLOSURE ON MULTILANE CONVENTIONAL HIGHWAYS

NO SCALE

T11

2026 STANDARD PLAN T11

7-1-26

Return to Table of Contents

LEGEND:

- TYPE I FLASHING ARROW SIGN
- SUPPORT OR TRAILER
- PORTABLE FLASHING BEACON
- TEMPORARY TRAFFIC CONTROL SIGN
- TRAFFIC CONE

SIGN PANEL SIZE (Min)	
A	48" x 48"
B	24" x 24"
C	36" x 18"

NOTES:

See Standard Plan T9 for tables.

Use cone spacing X for taper segment, Y for tangent segment or Z for conflict situations per Table 1, unless X, Y, or Z cone spacing is shown on this sheet.

Provide at least one person to continuously maintain traffic control devices for lane closures.

Dist	COUNTY	ROUTE	POST MILES TOTAL PROJECT	SHEET No.	TOTAL SHEETS

REGISTERED CIVIL ENGINEER

September 18, 2026

PLANS APPROVAL DATE

REGISTERED PROFESSIONAL ENGINEER Mike Malyy No. C83437 Exp. 3-31-27 CIVIL STATE OF CALIFORNIA

THE STATE OF CALIFORNIA OR ITS OFFICERS OR AGENTS SHALL NOT BE RESPONSIBLE FOR THE ACCURACY OR COMPLETENESS OF SCANNED COPIES OF THIS PLAN SHEET.

NOTES:

1. Portable delineators may be placed at one-half the spacing described for traffic cones, for daytime closures only.
2. Install at least two flags at each advance warning sign, for daytime closure. Flags must be at least 16" x 16" in size and must be orange or fluorescent red-orange in color. Place flashing beacon at the locations shown for lane closure during hours of darkness.
3. Place a G20-2 "END ROAD WORK" sign at the end of the lane closure unless the end of work area is obvious or ends within the limits of a larger project.
4. Provide a minimum 1500′ sight distance where possible for vehicles approaching the first flashing arrow sign. Do not begin closures at the top of crest vertical curve or on a horizontal curve.
5. Place C30(CA) "LANE CLOSED" sign at 500′ to 1000′ intervals throughout the closed lane.
6. Relocate secondary taper to tangent location and relocate C30(CA) sign. Remove W1-4R/W13-1P sign package.
7. Do not install signs and cones when a median barrier is in place.

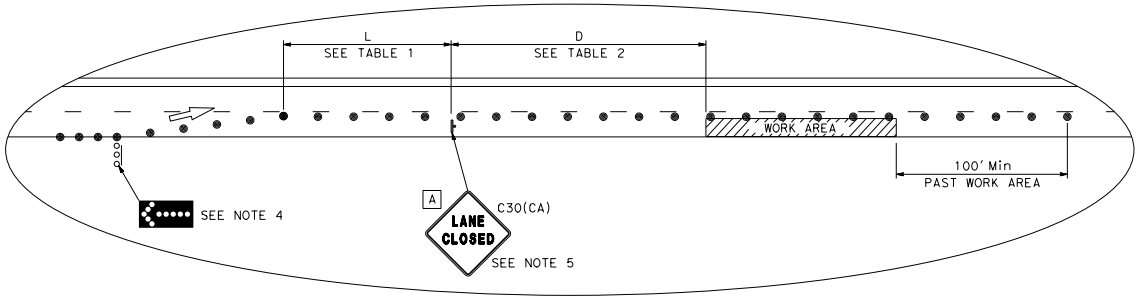

SECONDARY SETUP

See Note 6

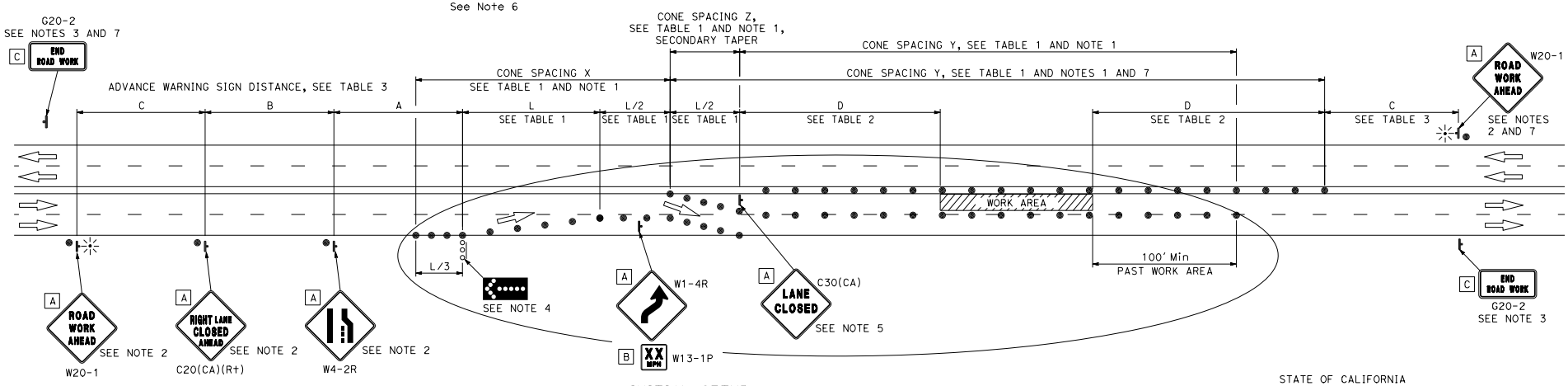

INITIAL SETUP

TYPICAL CHANGEABLE LANE CLOSURE

STATE OF CALIFORNIA
DEPARTMENT OF TRANSPORTATION

TRAFFIC CONTROL SYSTEM FOR CHANGEABLE LANE CLOSURE ON MULTILANE CONVENTIONAL HIGHWAYS AND EXPRESSWAYS

NO SCALE

T11A

2026 STANDARD PLAN T11A

7-1-26

Return to Table of Contents

Dist	COUNTY	ROUTE	POST MILES TOTAL PROJECT	SHEET No.	TOTAL SHEETS

REGISTERED CIVIL ENGINEER

September 18, 2026
PLANS APPROVAL DATE

REGISTERED PROFESSIONAL ENGINEER Mike Malyy No. C83437 Exp. 3-31-27 CIVIL STATE OF CALIFORNIA

THE STATE OF CALIFORNIA OR ITS OFFICERS OR AGENTS SHALL NOT BE RESPONSIBLE FOR THE ACCURACY OR COMPLETENESS OF SCANNED COPIES OF THIS PLAN SHEET.

SIGN PANEL SIZE (Min)	
A	48" x 48"
B	24" x 24"
C	36" x 18"

LEGEND:

- TYPE I FLASHING ARROW SIGN
- PORTABLE FLASHING BEACON
- SUPPORT OR TRAILER
- TEMPORARY TRAFFIC CONTROL SIGN
- TRAFFIC CONE

NOTES:

See Standard Plan T9 for tables.

Use cone spacing X for taper segment, Y for tangent segment or Z for conflict situations per Table 1, unless X, Y, or Z cone spacing is shown on this sheet.

Provide at least one person to continuously maintain traffic control devices for lane closures.

NOTES:

1. Portable delineators may be placed at one-half the spacing indicated for traffic cones, for daytime closures only.
2. Install at least two flags at each advance warning sign, for daytime closure. Flags must be at least 16" x 16" in size and must be orange or fluorescent red-orange in color. Place flashing beacons at the locations shown for lane closure during hours of darkness.
3. Place a G20-2 "END ROAD WORK" sign at the end of the lane closure unless the end of work area is obvious or ends within the limits of a larger project.
4. Provide a minimum 1500' sight distance for vehicles approaching the first flashing arrow sign, where feasible. Do not begin lane closures at the crest of vertical curves and horizontal curves.
5. Advisory speed will be determined by the Engineer. Do not install the W13-1P plaque when advisory speed is more than the posted or maximum speed limit.
6. The Engineer may authorize a reduced length to address site conditions.
7. Use tangent (L/2).

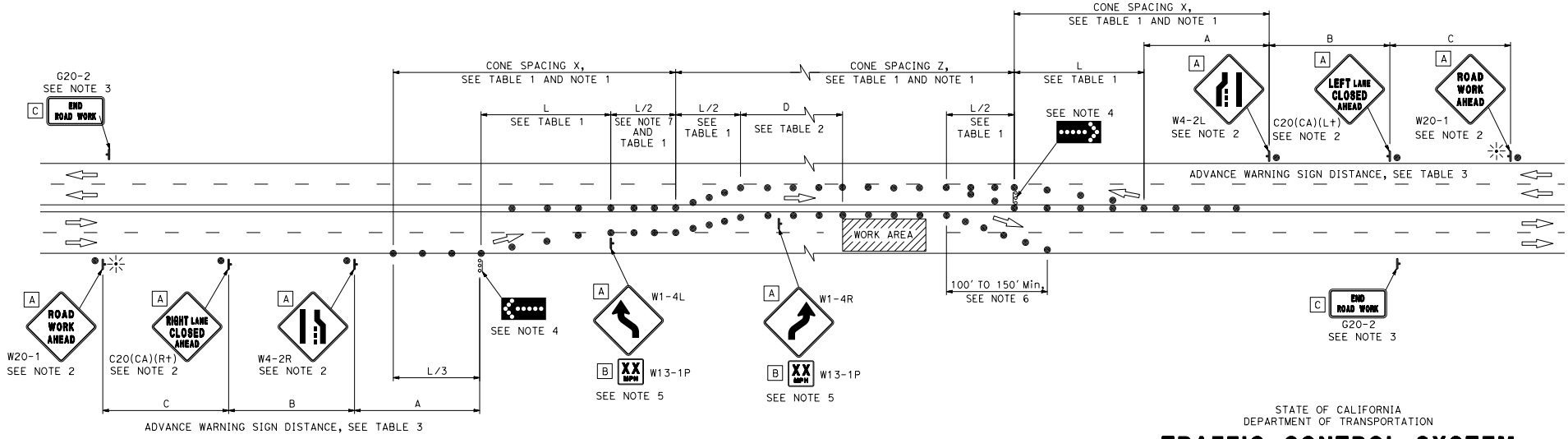

TYPICAL HALF-ROAD CLOSURE

STATE OF CALIFORNIA
DEPARTMENT OF TRANSPORTATION

TRAFFIC CONTROL SYSTEM FOR HALF ROAD CLOSURE ON MULTILANE CONVENTIONAL HIGHWAYS AND EXPRESSWAYS

NO SCALE

T12

7-1-26

2026 STANDARD PLAN T12

Return to Table of Contents

Dist	COUNTY	ROUTE	POST MILES TOTAL PROJECT	SHEET No.	TOTAL SHEETS

REGISTERED CIVIL ENGINEER

September 18, 2026
PLANS APPROVAL DATE

REGISTERED PROFESSIONAL ENGINEER Mike Malyy No. C83437 Exp. 3-31-27 CIVIL STATE OF CALIFORNIA

THE STATE OF CALIFORNIA OR ITS OFFICERS OR AGENTS SHALL NOT BE RESPONSIBLE FOR THE ACCURACY OR COMPLETENESS OF SCANNED COPIES OF THIS PLAN SHEET.

LEGEND:

- AUTOMATED FLAGGING ASSISTANCE DEVICE (AFAD)
- FLAGGER
- PORTABLE FLASHING BEACON
- TEMPORARY TRAFFIC CONTROL SIGN
- TRAFFIC CONE

SIGN PANEL SIZE (Min)	
A	48" x 48"
B	30" x 30"
C	36" x 18"
D	24" x 12"

NOTES:

See Standard Plan T9 for tables.

Use cone spacing X for taper segment, Y for tangent segment or Z for conflict situations per Table 1, unless X, Y, or Z cone spacing is shown on this sheet.

Provide at least one person to continuously maintain traffic control devices for lane closures.

NOTES:

1. Portable delineators may be placed at one-half the spacing described for traffic cones, for daytime closures only.
2. Install at least two flags at each advance warning sign, for daytime closure. Flags must be at least 16" x 16" in size and must be orange or fluorescent red-orange in color. Place flashing beacons at the locations shown for lane closure during hours of darkness.
3. Place a G20-2 "END ROAD WORK" sign at the end of the lane closure unless the end of work area is obvious or ends within the limits of a larger projects.
4. An optional W16-2aP sign may be placed below the W20-7 sign.
5. Place C30(CA) "LANE CLOSED" sign at 500-foot to 1000-foot intervals throughout the closed lane. C30(CA) signs are optional if the work area is visible from the flagger station.
6. The Engineer may authorize a reduced length to address site conditions.
7. Place either traffic cones or barricades on the taper. Barricades must be Type I, II, or III.
8. Measure distance C from W20-4 sign, when C45(CA) is not used.
9. Place a minimum of 3 cones transversely across each closed lane and shoulder at each location where a taper across a traffic lane ends and every 1000' as shown. Two Type II barricades may be used instead of the 3 cones. The cones or barricades on the closed shoulder may be shifted from the transverse alignment to provide access to the work area.
10. Place a minimum of 4 cones at 50-foot spacing in advance of flagger station.

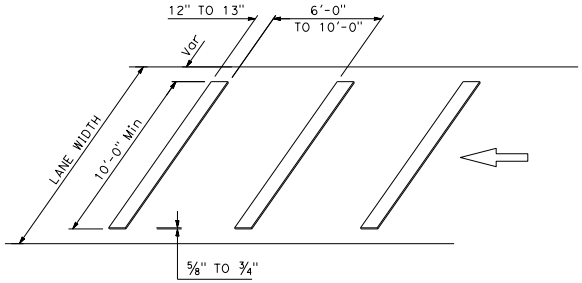

PORTABLE TRANSVERSE RUMBLE STRIP ARRAY DETAIL

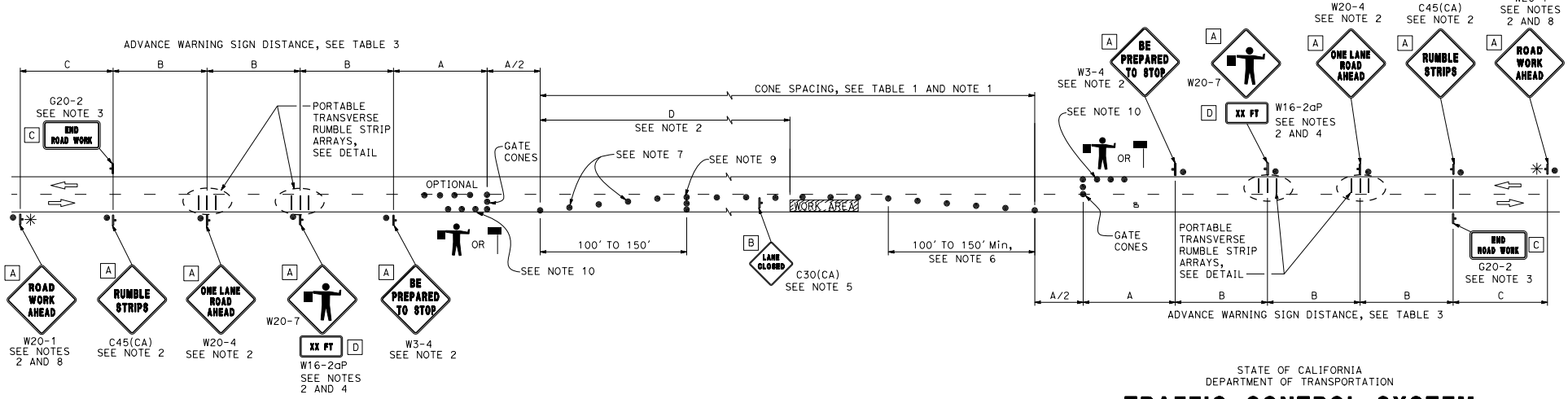

STATE OF CALIFORNIA
DEPARTMENT OF TRANSPORTATION

TRAFFIC CONTROL SYSTEM WITH REVERSIBLE CONTROL ON TWO LANE CONVENTIONAL HIGHWAYS

NO SCALE

T13

2026 STANDARD PLAN T13

7-1-26

Return to Table of Contents

Dist	COUNTY	ROUTE	POST MILES TOTAL PROJECT	SHEET No.	TOTAL SHEETS

REGISTERED CIVIL ENGINEER

September 18, 2026
PLANS APPROVAL DATE

REGISTERED PROFESSIONAL ENGINEER
Mike Malyy
No. C83437
Exp. 3-31-27
CIVIL
STATE OF CALIFORNIA

THE STATE OF CALIFORNIA OR ITS OFFICERS OR AGENTS SHALL NOT BE RESPONSIBLE FOR THE ACCURACY OR COMPLETENESS OF SCANNED COPIES OF THIS PLAN SHEET.

SIGN PANEL SIZE (Min)	
A	48" x 48"

LEGEND:

- FLAGGER
- PCMS — PORTABLE CHANGEABLE MESSAGE SIGN
- PORTABLE FLASHING BEACON
- TEMPORARY TRAFFIC CONTROL SIGN
- TRAFFIC CONE
- TRAILER

NOTES:

1. Install at least two flags at each advance warning sign, for daytime closure. Flags must be at least 16" x 16" in size and must be orange or fluorescent red-orange in color. Place flashing beacons at the locations shown for lane closure during hours of darkness.
2. See Standard Plan T9, Table 3 for advance warning sign spacing.
3. Place W26-1 sign as shown, when distance E is 1000′ or more. Place W26-1 sign for every additional 1000′ at 1000-foot intervals.
4. Place a minimum of 4 cones at 50-foot spacing in advance of flagger station.

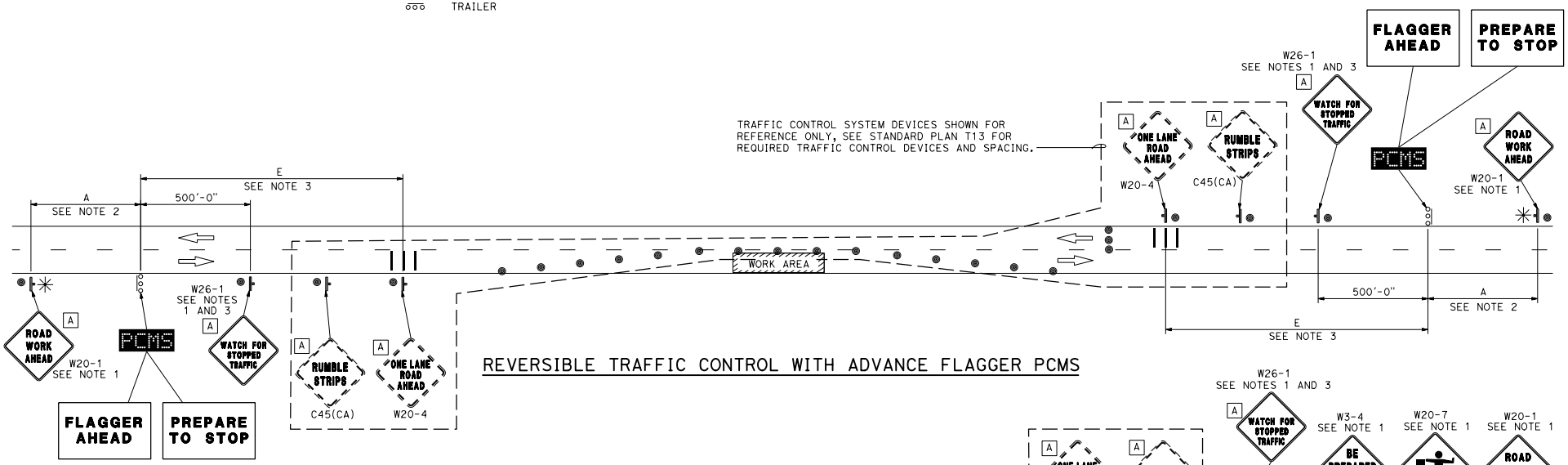

REVERSIBLE TRAFFIC CONTROL WITH ADVANCE FLAGGER PCMS

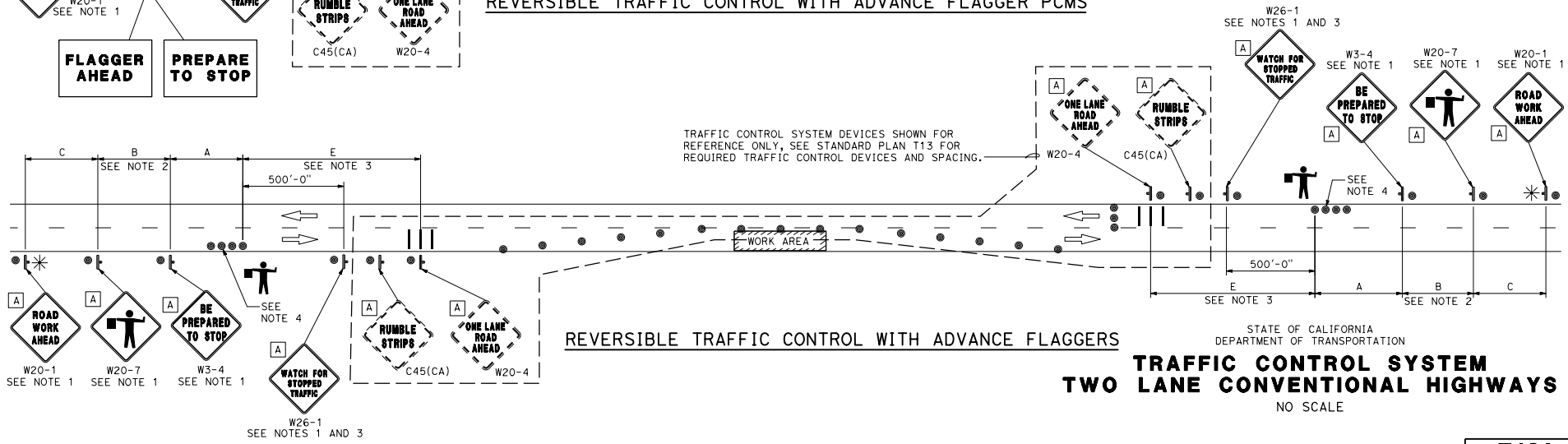

REVERSIBLE TRAFFIC CONTROL WITH ADVANCE FLAGGERS

STATE OF CALIFORNIA
DEPARTMENT OF TRANSPORTATION

TRAFFIC CONTROL SYSTEM
TWO LANE CONVENTIONAL HIGHWAYS

NO SCALE

T13A

2026 STANDARD PLAN T13A

7-1-26

Return to Table of Contents

Dist	COUNTY	ROUTE	POST MILES TOTAL PROJECT	SHEET No.	TOTAL SHEETS

REGISTERED CIVIL ENGINEER

September 18, 2026

PLANS APPROVAL DATE

REGISTERED PROFESSIONAL ENGINEER Mike Malyy No. C83437 Exp. 3-31-27 CIVIL STATE OF CALIFORNIA

THE STATE OF CALIFORNIA OR ITS OFFICERS OR AGENTS SHALL NOT BE RESPONSIBLE FOR THE ACCURACY OR COMPLETENESS OF SCANNED COPIES OF THIS PLAN SHEET.

SIGN PANEL SIZE (Min)	
A	48" x 48"
B	36" x 42"
C	30" x 30"
D	24" x 30"

LEGEND:

- FLAGGER
- PORTABLE FLASHING BEACON
- TEMPORARY TRAFFIC CONTROL SIGN
- TRAFFIC CONE

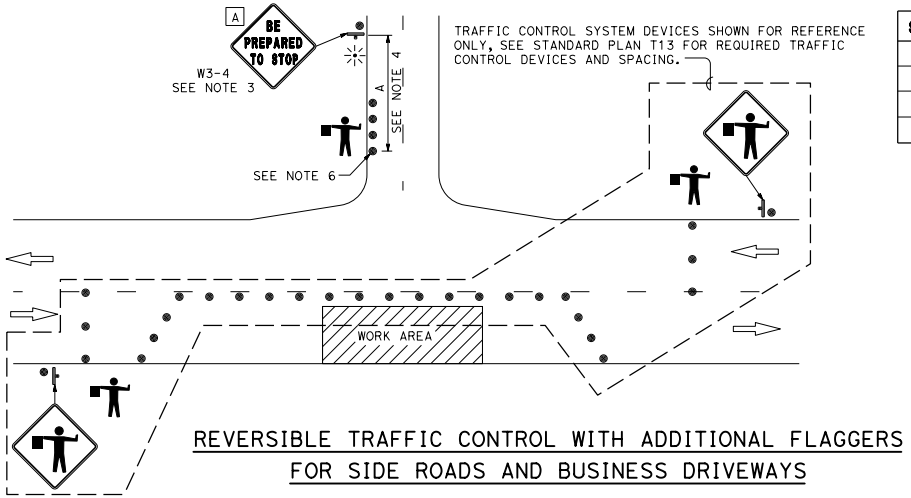

REVERSIBLE TRAFFIC CONTROL WITH ADDITIONAL FLAGGERS FOR SIDE ROADS AND BUSINESS DRIVEWAYS

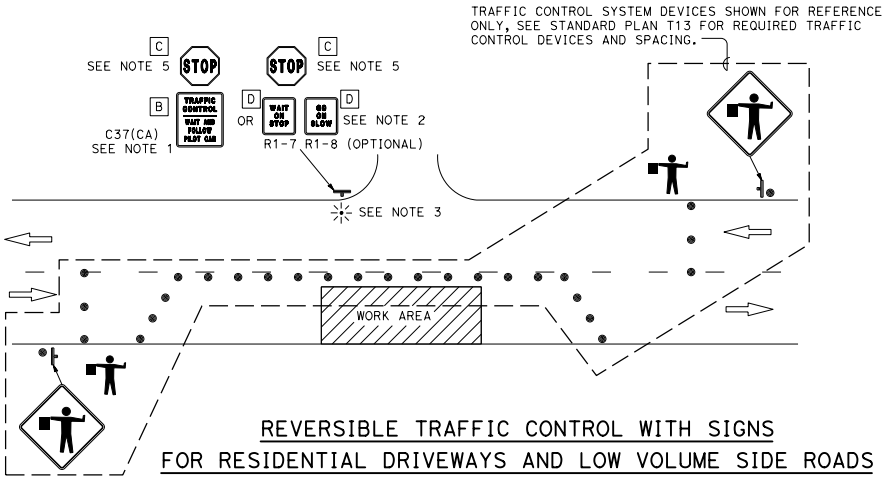

REVERSIBLE TRAFFIC CONTROL WITH SIGNS FOR RESIDENTIAL DRIVEWAYS AND LOW VOLUME SIDE ROADS

NOTES:

1. Place C37(CA) sign when pilot car is used.
2. Place R1-7 and R1-8 signs when pilot car is not used.
3. Install at least two flags at each advance warning sign, for daytime closure. Flags must be at least 16" x 16" in size and must be orange or fluorescent red-orange in color. Place flashing beacons at the locations shown for lane closure during hours of darkness.
4. See Standard Plan T9, Table 3 for advance warning sign spacing.
5. Place temporary "STOP" sign when no existing "STOP" sign is installed.
6. Place a minimum of 4 cones at 50-foot spacing in advance of flagger station.

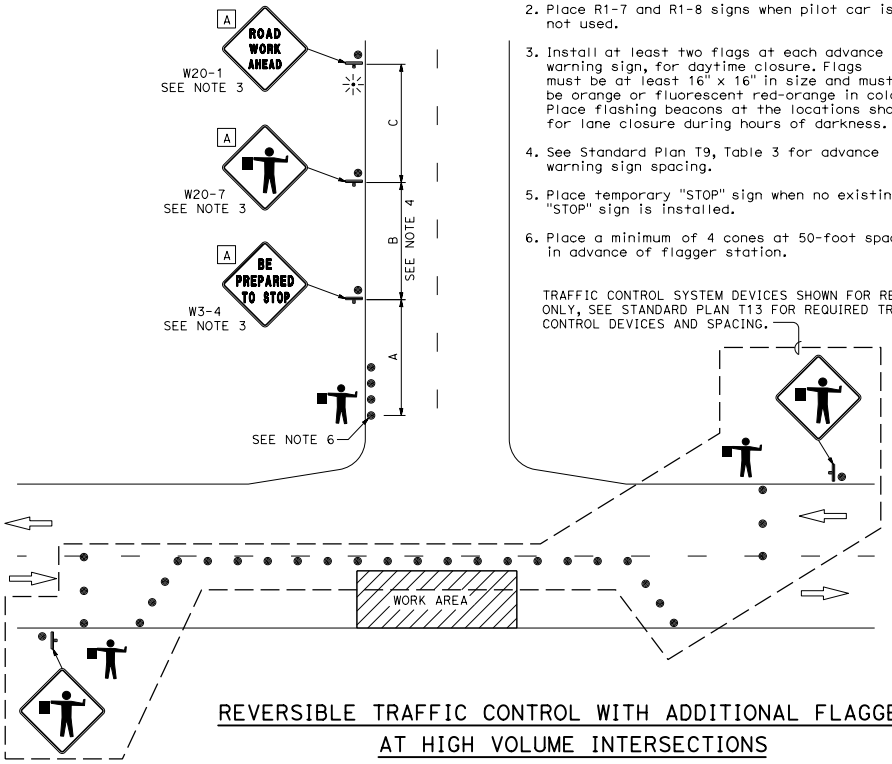

REVERSIBLE TRAFFIC CONTROL WITH ADDITIONAL FLAGGERS AT HIGH VOLUME INTERSECTIONS

STATE OF CALIFORNIA
DEPARTMENT OF TRANSPORTATION

TRAFFIC CONTROL SYSTEM TWO LANE CONVENTIONAL HIGHWAYS

NO SCALE

T13B

2026 STANDARD PLAN T13B

7-1-26

Return to Table of Contents

Dist	COUNTY	ROUTE	POST MILES TOTAL PROJECT	SHEET No.	TOTAL SHEETS

REGISTERED CIVIL ENGINEER

September 18, 2026
PLANS APPROVAL DATE

REGISTERED PROFESSIONAL ENGINEER
Mike Malyy
No. C83437
Exp. 3-31-27
CIVIL
STATE OF CALIFORNIA

THE STATE OF CALIFORNIA OR ITS OFFICERS OR AGENTS SHALL NOT BE RESPONSIBLE FOR THE ACCURACY OR COMPLETENESS OF SCANNED COPIES OF THIS PLAN SHEET.

SIGN PANEL SIZE (Min)	
A	48" x 48"

LEGEND:

- FLAGGER
- PORTABLE FLASHING BEACON
- TEMPORARY TRAFFIC CONTROL SIGN
- TRAFFIC CONE
- TRAFFIC CONE, Alt 2

NOTES:

1. Place advance warning signs to inform drivers of side road or business driveway closure and detour.
2. Install at least two flags at each advance warning sign, for daytime closure. Flags must be at least 16" x 16" in size and must be orange or fluorescent red-orange in color. Place flashing beacons at the location shown for lane closure during hours of darkness.
3. See Standard Plan T9, Table 3 for advance warning sign spacing.

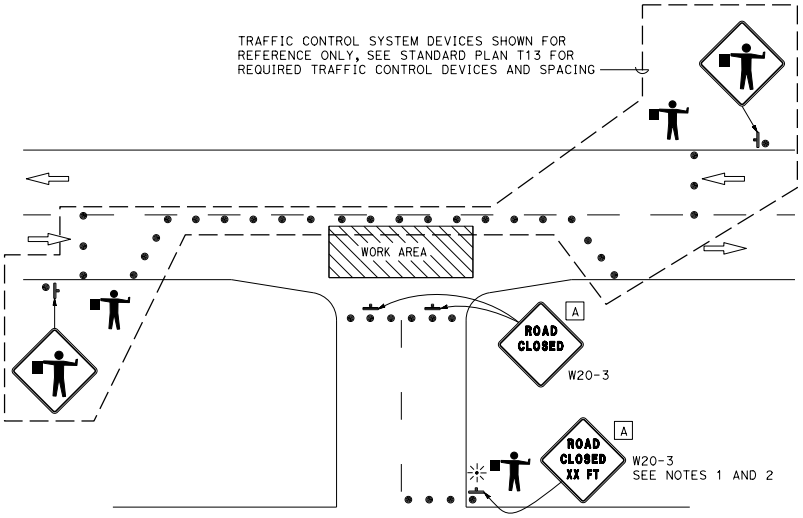

REVERSIBLE TRAFFIC CONTROL WITH ADDITIONAL FLAGGERS FOR SIDE ROADS AND BUSINESS DRIVEWAYS INTERSECTING CLOSED AREA (OPTION 1)

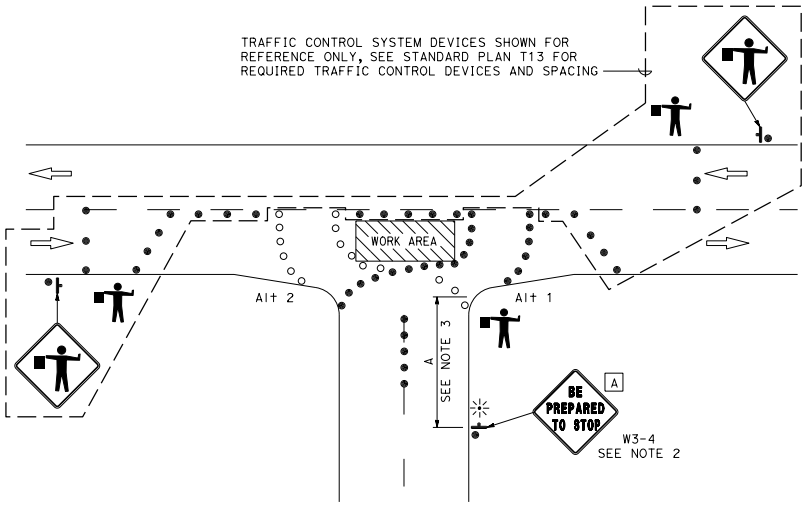

REVERSIBLE TRAFFIC CONTROL WITH ADDITIONAL FLAGGERS FOR SIDE ROADS AND BUSINESS DRIVEWAYS INTERSECTING CLOSED AREA (OPTION 2)

STATE OF CALIFORNIA
DEPARTMENT OF TRANSPORTATION

TRAFFIC CONTROL SYSTEM
TWO LANE CONVENTIONAL HIGHWAYS

NO SCALE

T13C

7-1-26

2026 STANDARD PLAN T13C

Return to Table of Contents

Dist	COUNTY	ROUTE	POST MILES TOTAL PROJECT	SHEET No.	TOTAL SHEETS

REGISTERED CIVIL ENGINEER

September 18, 2026

PLANS APPROVAL DATE

REGISTERED PROFESSIONAL ENGINEER Mike Malyy No. C83437 Exp. 3-31-27 CIVIL STATE OF CALIFORNIA

THE STATE OF CALIFORNIA OR ITS OFFICERS OR AGENTS SHALL NOT BE RESPONSIBLE FOR THE ACCURACY OR COMPLETENESS OF SCANNED COPIES OF THIS PLAN SHEET.

NOTES:

See Standard Plan T9 for tables.

Use cone spacing X for taper segment, Y for tangent segment or Z for conflict situations per Table 1, unless X, Y, or Z cone spacing is shown on this sheet.

Provide at least one person to continuously maintain traffic control devices for lane closures.

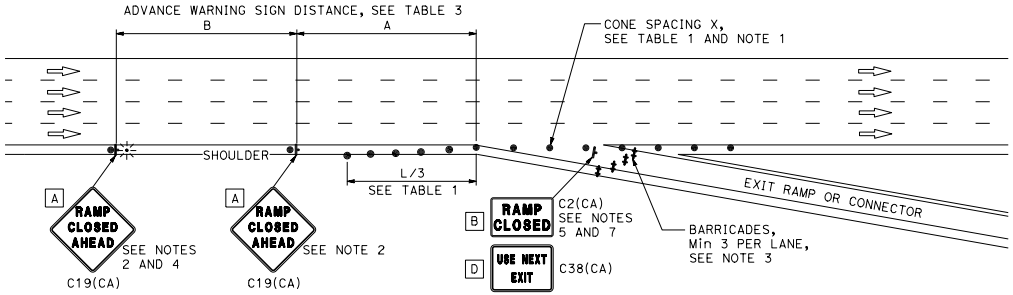

EXIT RAMP OR CONNECTOR

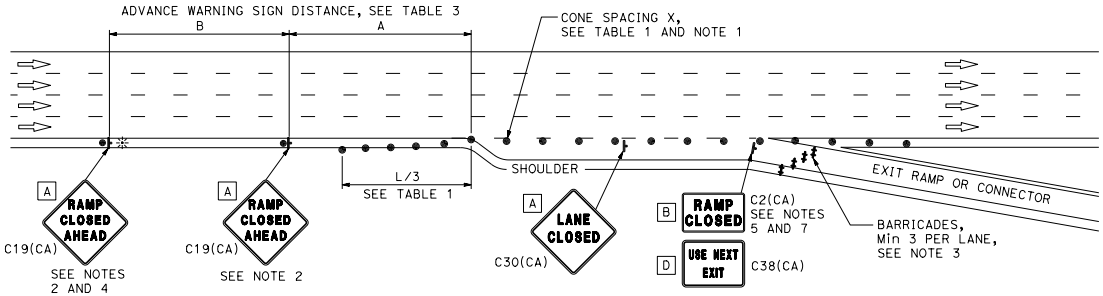

EXIT RAMP OR CONNECTOR WITH ADDITIONAL LANE

NOTES:

1. Portable delineators may be placed at one-half the spacing shown for traffic cones, for daytime closures only.
2. Install at least two flags at each advance warning C19(CA) "RAMP CLOSED AHEAD" sign, for daytime closure. Flags must be at least 16" x 16" in size and shall be orange or fluorescent red-orange in color. Place a flashing beacon on top of the first C19(CA) sign during hours of darkness.
3. Place barricades Type I, II, or III for closures lasting one week or less and Type III for closures lasting longer than one week.
4. In addition to placing the C19(CA) "RAMP CLOSED AHEAD" and C30(CA) "RAMP CLOSED" signs, mount black on orange overlay plates with the word "CLOSED" on all guide signs that refer to the closed ramp, when authorized. The letter size on the overlay must be the same as the guide sign.
5. Cover existing "EXIT" signs during ramp closures.
6. Place a minimum of 3 cones transversely across each closed lane and shoulder.
7. C2(CA) sign must be black and white.

LEGEND:

- BARRICADES
- PORTABLE FLASHING BEACON
- TEMPORARY TRAFFIC CONTROL SIGN
- TRAFFIC CONE

SIGN PANEL SIZE (Min)	
A	48" x 48"
B	48" x 30"
C	36" x 36"
D	48" x 36"

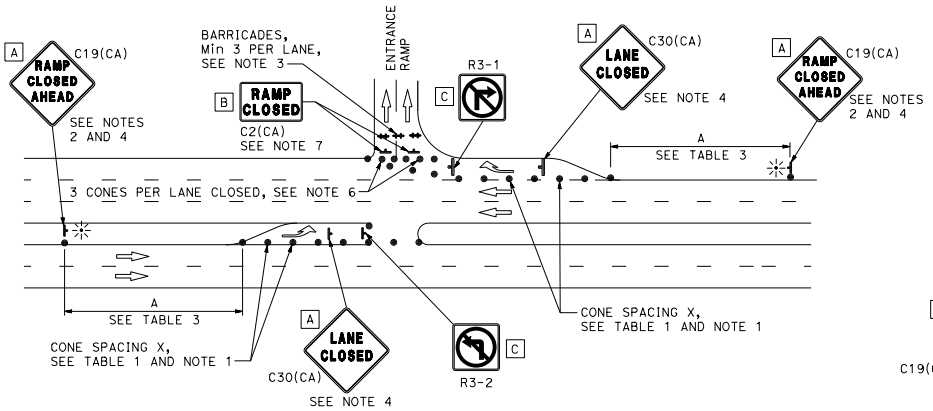

ENTRANCE RAMP WITH TURNING POCKETS

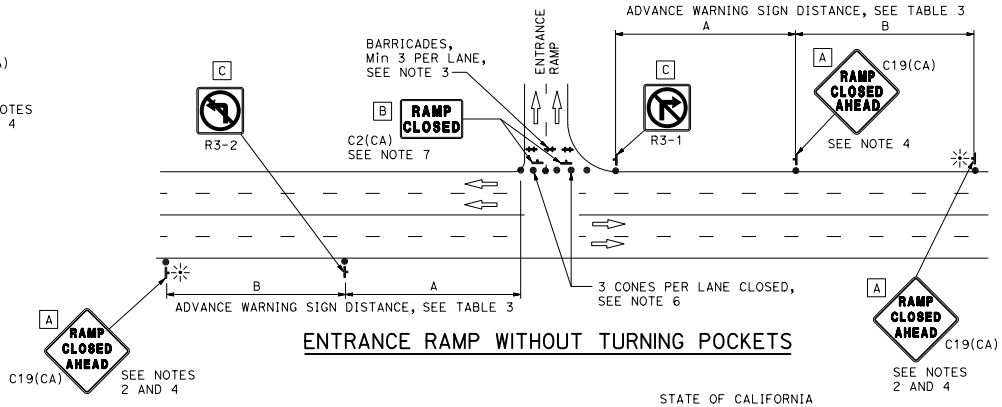

ENTRANCE RAMP WITHOUT TURNING POCKETS

TYPICAL RAMP CLOSURES

STATE OF CALIFORNIA
DEPARTMENT OF TRANSPORTATION

TRAFFIC CONTROL SYSTEM FOR RAMP CLOSURE

NO SCALE

T14

2026 STANDARD PLAN T14

7-1-26

Return to Table of Contents

SIGN PANEL SIZE (Min)	
A	66" x 36"
B	54" x 42"

LEGEND:

PCMS	PORTABLE CHANGEABLE MESSAGE SIGN
	TYPE II FLASHING ARROW SIGN
	TRUCK-MOUNTED ATTENUATOR (TMA)
V1	SIGN VEHICLE
V2	SHADOW VEHICLE
V3	WORK/APPLICATION VEHICLE

Dist	COUNTY	ROUTE	POST MILES TOTAL PROJECT	SHEET No.	TOTAL SHEETS

REGISTERED CIVIL ENGINEER

September 18, 2026

PLANS APPROVAL DATE

REGISTERED PROFESSIONAL ENGINEER Mike Malyy No. C83437 Exp. 3-31-27 CIVIL STATE OF CALIFORNIA

THE STATE OF CALIFORNIA OR ITS OFFICERS OR AGENTS SHALL NOT BE RESPONSIBLE FOR THE ACCURACY OR COMPLETENESS OF SCANNED COPIES OF THIS PLAN SHEET.

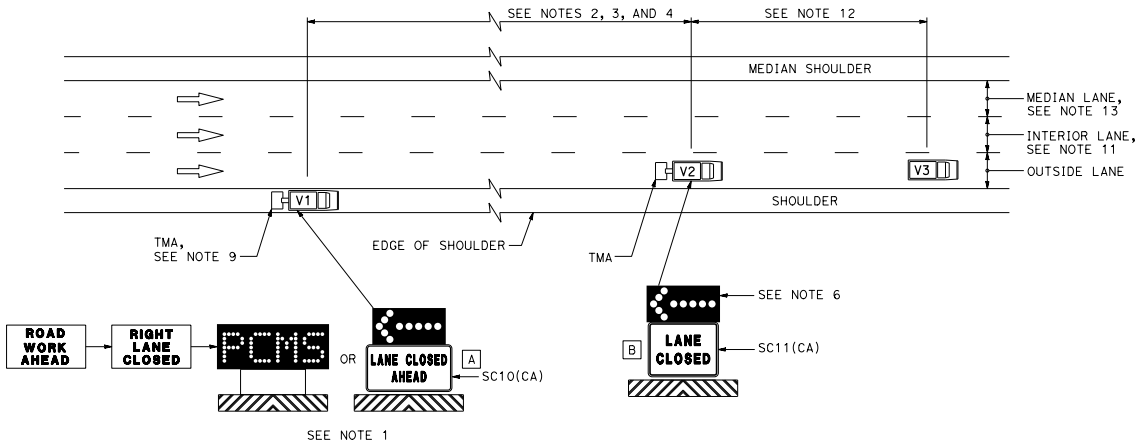

MOVING LANE CLOSURE ON MEDIAN LANE OR OUTSIDE LANE OF MULTILANE HIGHWAYS

NOTES:

1. For median lane closure, the flashing arrow symbol must be reversed with the arrowhead on the right and the changeable message sign must show "LEFT LANE CLOSED".
2. Position vehicle V1 upstream from the end of queue, when a traffic queue develops. Position vehicle V1 where highly visible when shoulders are not available.
3. Provide a minimum 1500′ sight distance in advance of vehicle V1.
4. Keep vehicle V1 at the beginning of horizontal or vertical curves until vehicles V2 and V3 are far enough beyond the curve to resume the minimum 1500′ sight distance.
5. Vehicle-mounted sign panels must have Type III or higher retroreflective sheeting, black on white, or black on fluorescent orange, with 6" minimum series D letters.
6. For median lane closure, display the flashing arrow sign symbol with the arrowhead on the right.
7. All vehicles used for lane closures must be equipped with two-way radios, and the vehicle operators must maintain communication during work.
8. All vehicles must be equipped with flashing or rotating amber lights.
9. If vehicle V1 encroaches into the traffic lane due to insufficient shoulder width, vehicle V1 must be equipped with a truck-mounted attenuator. Drive vehicle V1 as close to the edge of shoulder as practicable.
10. Use a stationary lane closure (Standard Plan T10, T11, etc., as applicable), when workers would be on foot within the work area.
11. Use Standard Plan T16 for moving lane closure on interior lane of multilane highways.
12. Minimize the space between vehicles to deter road users from driving in between.
13. When vehicle V3 occupies the median lane, drive vehicle V1 in the median shoulder and display "LEFT LANE CLOSED AHEAD".

STATE OF CALIFORNIA
DEPARTMENT OF TRANSPORTATION

TRAFFIC CONTROL SYSTEM FOR MOVING LANE CLOSURE ON MULTILANE HIGHWAYS

NO SCALE

T15

2026 STANDARD PLAN T15

7-1-26

Return to Table of Contents

Dist	COUNTY	ROUTE	POST MILES TOTAL PROJECT	SHEET No.	TOTAL SHEETS

REGISTERED CIVIL ENGINEER

September 18, 2026
PLANS APPROVAL DATE

REGISTERED PROFESSIONAL ENGINEER
Mike Malyy
No. C83437
Exp. 3-31-27
CIVIL
STATE OF CALIFORNIA

THE STATE OF CALIFORNIA OR ITS OFFICERS OR AGENTS SHALL NOT BE RESPONSIBLE FOR THE ACCURACY OR COMPLETENESS OF SCANNED COPIES OF THIS PLAN SHEET.

SIGN PANEL SIZE (Min)	
A	54" x 42"

LEGEND:

- PCMS — PORTABLE CHANGEABLE MESSAGE SIGN
- TYPE II FLASHING ARROW SIGN IN FLASHING DOUBLE ARROW MODE
- TRUCK-MOUNTED ATTENUATOR (TMA)
- V1 — SIGN VEHICLE
- V2 — SHADOW VEHICLE
- V3 — WORK/APPLICATION VEHICLE

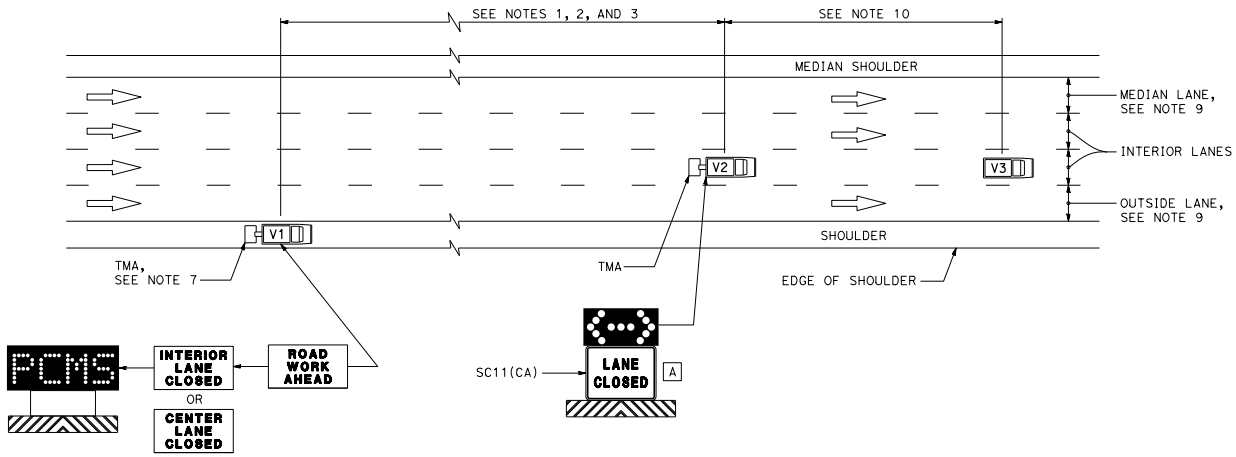

MOVING LANE CLOSURE ON INTERIOR LANE OF MULTILANE HIGHWAYS

NOTES:

1. Position vehicle V1 upstream from the end of queue, when traffic queue develops. Position vehicle V1 where highly visible when shoulders are not available.
2. Provide a minimum 1500′ sight distance in advance of vehicle V1.
3. Keep vehicle V1 at the beginning of horizontal or vertical curves until vehicles V2 and V3 are far enough beyond the curve to resume the minimum 1500′ sight distance.
4. Vehicle-mounted sign panels must have Type III or higher retroreflective sheeting, black on white, or black on fluorescent orange, with 6" minimum series D letters.
5. All vehicles used for lane closures must be equipped with two-way radios, and the vehicle operators must maintain communication during work.
6. All vehicles must be equipped with flashing or rotating amber lights.
7. If vehicle V1 encroaches into the traffic lane due to insufficient shoulder width, vehicle V1 must be equipped with a truck-mounted attenuator. Drive vehicle V1 as close to the edge of shoulder as practicable.
8. Use a stationary lane closure (Standard Plan T10, T11, etc., as applicable), when workers would be on foot within the work area.
9. Use Standard Plan T15 for moving lane closure on median lane or outside lane of multilane highways.
10. Minimize the space between vehicles to deter road users from driving in between.

STATE OF CALIFORNIA
DEPARTMENT OF TRANSPORTATION

TRAFFIC CONTROL SYSTEM FOR MOVING LANE CLOSURE ON MULTILANE HIGHWAYS

NO SCALE

T16

2026 STANDARD PLAN T16

7-1-26

Return to Table of Contents

SIGN PANEL SIZE (Min)	
A	72" x 42"
B	54" x 42"
C	54" x 24"

LEGEND:

- PCMS — PORTABLE CHANGEABLE MESSAGE SIGN
- TYPE II FLASHING ARROW SIGN IN ALTERNATING DIAMOND CAUTION
- TYPE II FLASHING ARROW SIGN IN FLASHING CAUTION MODE
- TRUCK-MOUNTED ATTENUATOR (TMA)
- V1 — SIGN VEHICLE
- V2 — SHADOW VEHICLE
- V3 — WORK/APPLICATION VEHICLE
- V4 — SIGN VEHICLE

Dist	COUNTY	ROUTE	POST MILES TOTAL PROJECT	SHEET No.	TOTAL SHEETS

REGISTERED CIVIL ENGINEER

September 18, 2026
PLANS APPROVAL DATE

REGISTERED PROFESSIONAL ENGINEER — Mike Malyy — No. C83437 — Exp. 3-31-27 — CIVIL — STATE OF CALIFORNIA

THE STATE OF CALIFORNIA OR ITS OFFICERS OR AGENTS SHALL NOT BE RESPONSIBLE FOR THE ACCURACY OR COMPLETENESS OF SCANNED COPIES OF THIS PLAN SHEET.

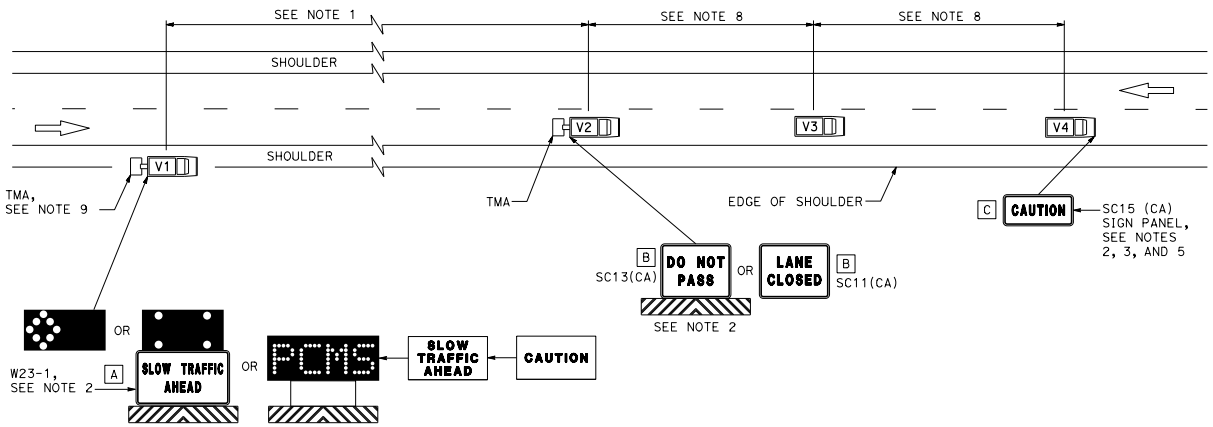

NOTES:

1. Position vehicle V1 where highly visible, when shoulders are not available. Position vehicle V1 upstream from the end of queue, when traffic queue develops.
2. Vehicle-mounted sign panels must have Type III or higher retroreflective sheeting, black on white, or black on fluorescent orange, with 6" minimum series D letters per Caltrans sign specifications.
3. Mount the sign panel on the front of vehicle V4, facing opposing traffic.
4. All vehicles must be equipped with flashing or rotating amber lights.
5. Do not use vehicle V4 when the work and vehicles V2 and V3 are 2' or more away from the centerline of the highway.
6. All vehicles used for lane closures must be equipped with two-way radios and the vehicle operators must maintain communication during work.
7. Use a stationary lane closure (Standard Plan T13) when workers would be on foot in the work area.
8. Minimize the space between vehicles to deter road users from driving in between them.
9. If vehicle V1 encroaches into the traffic lane due to insufficient shoulder width, vehicle V1 must be equipped with a truck-mounted attenuator. Drive vehicle V1 as close to the edge of shoulder as practicable.

STATE OF CALIFORNIA
DEPARTMENT OF TRANSPORTATION

TRAFFIC CONTROL SYSTEM FOR MOVING LANE CLOSURE ON TWO LANE HIGHWAYS

NO SCALE

T17

2026 STANDARD PLAN T17

7-1-26

Return to Table of Contents

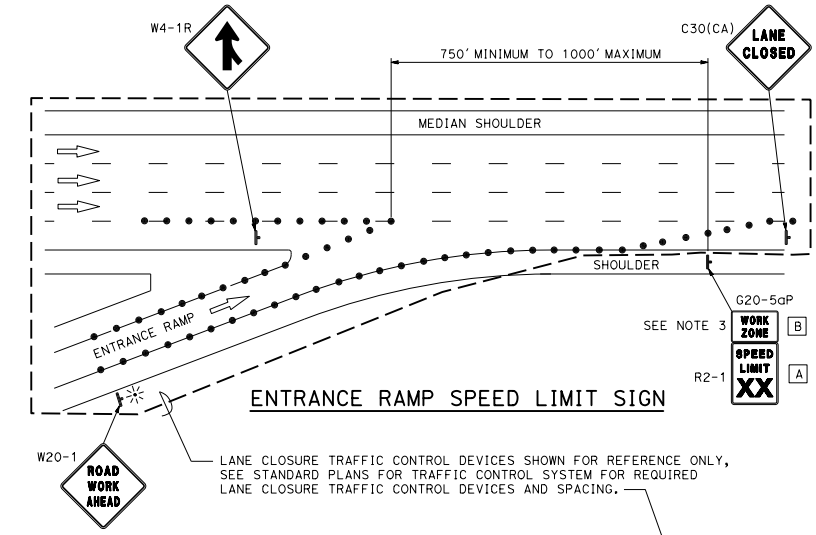

ENTRANCE RAMP SPEED LIMIT SIGN

LANE CLOSURE TRAFFIC CONTROL DEVICES SHOWN FOR REFERENCE ONLY, SEE STANDARD PLANS FOR TRAFFIC CONTROL SYSTEM FOR REQUIRED LANE CLOSURE TRAFFIC CONTROL DEVICES AND SPACING.

SIGN SIZE FREEWAY AND EXPRESSWAY (Min)	
A	36" x 48"
B	36" x 24"
C	36" x 54"
D	36" x 30"
E	48" x 48"

LEGEND:

- PORTABLE FLASHING BEACON
- PCMS — PORTABLE CHANGEABLE MESSAGE SIGN
- PORTABLE RADAR SPEED FEEDBACK SIGN SYSTEM
- SUPPORT OR TRAILER
- TYPE I FLASHING ARROW SIGN
- TEMPORARY TRAFFIC CONTROL SIGN
- TRAFFIC CONE
- TRAFFIC CONE (OPTIONAL TAPER)

Dist	COUNTY	ROUTE	POST MILES TOTAL PROJECT	SHEET No.	TOTAL SHEETS

REGISTERED CIVIL ENGINEER

September 18, 2026
PLANS APPROVAL DATE

Mike Malyy
No. C83437
Exp. 3-31-27
CIVIL
STATE OF CALIFORNIA
REGISTERED PROFESSIONAL ENGINEER

THE STATE OF CALIFORNIA OR ITS OFFICERS OR AGENTS SHALL NOT BE RESPONSIBLE FOR THE ACCURACY OR COMPLETENESS OF SCANNED COPIES OF THIS PLAN SHEET.

NOTES:

1. Duplicate sign installations are not required:
   a) On opposite shoulder if at least one-half of the available lanes remain open to traffic.
   b) In the median if the width of the median shoulder is less than 8' and the outside lanes are to be closed.
2. Place intermediate R2-1 sign and G20-5aP plaque at approximate 3-mile spacing throughout the speed limit reduction zone, when speed limit reduction zones are longer than 3 miles.
3. Place an R2-1 sign and G20-5aP plaque at each entrance ramp within the speed limit reduction zone.
4. The distances shown for sign spacing are approximate and should be applied with engineering judgement. The distances should be adjusted by the Engineer for field conditions, by increasing or decreasing the recommended distances.

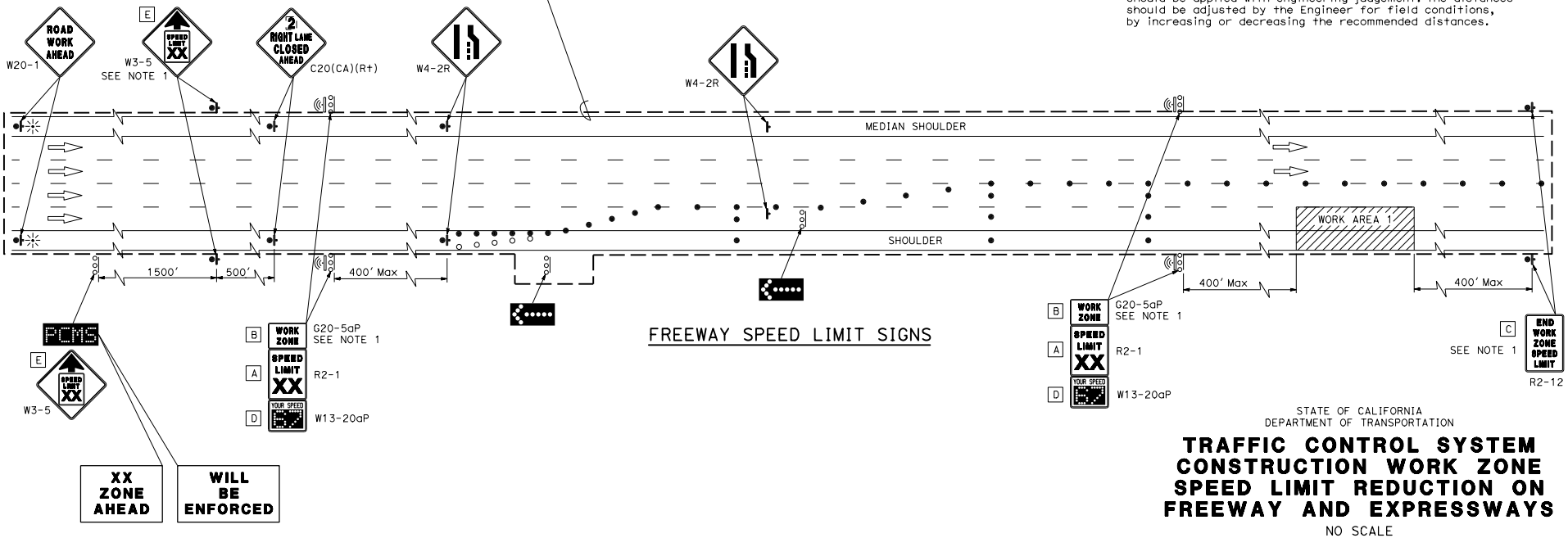

FREEWAY SPEED LIMIT SIGNS

STATE OF CALIFORNIA
DEPARTMENT OF TRANSPORTATION

TRAFFIC CONTROL SYSTEM CONSTRUCTION WORK ZONE SPEED LIMIT REDUCTION ON FREEWAY AND EXPRESSWAYS

NO SCALE

T18

7-1-26

Return to Table of Contents

Dist	COUNTY	ROUTE	POST MILES TOTAL PROJECT	SHEET No.	TOTAL SHEETS

REGISTERED CIVIL ENGINEER

September 18, 2026
PLANS APPROVAL DATE

REGISTERED PROFESSIONAL ENGINEER
Mike Malyy
No. C83437
Exp. 3-31-27
CIVIL
STATE OF CALIFORNIA

THE STATE OF CALIFORNIA OR ITS OFFICERS OR AGENTS SHALL NOT BE RESPONSIBLE FOR THE ACCURACY OR COMPLETENESS OF SCANNED COPIES OF THIS PLAN SHEET.

SIGN	PANEL SIZE (Min)
A	48" x 48"
B	36" x 18"
C	24" x 30"
D	24" x 18"
E	24" x 36"
F	24" x 18"

LEGEND:

- PCMS — PORTABLE CHANGEABLE MESSAGE SIGN
- PORTABLE FLASHING BEACON
- PORTABLE RADAR SPEED FEEDBACK SIGN SYSTEM
- SUPPORT OR TRAILER
- TEMPORARY TRAFFIC CONTROL SIGN
- TRAFFIC CONE
- TRAFFIC CONE (OPTIONAL TAPER)

NOTES:

1. See Standard Plan T9 for Table 3 showing advance warning signs spacing.
2. Place a W20-1 sign in advance of the PCMS, when the PCMS is placed upstream of the W20-1 construction area sign.
3. Place additional R2-1 sign and G20-5aP plaque:
   a. Where speed limit reduction zones are longer than 3 miles. Place intermediate signs at approximately 3-mile spacing throughout the speed limit reduction zone.
   b. Approximately 500 feet downstream from major intersections within the speed limit reduction zone.

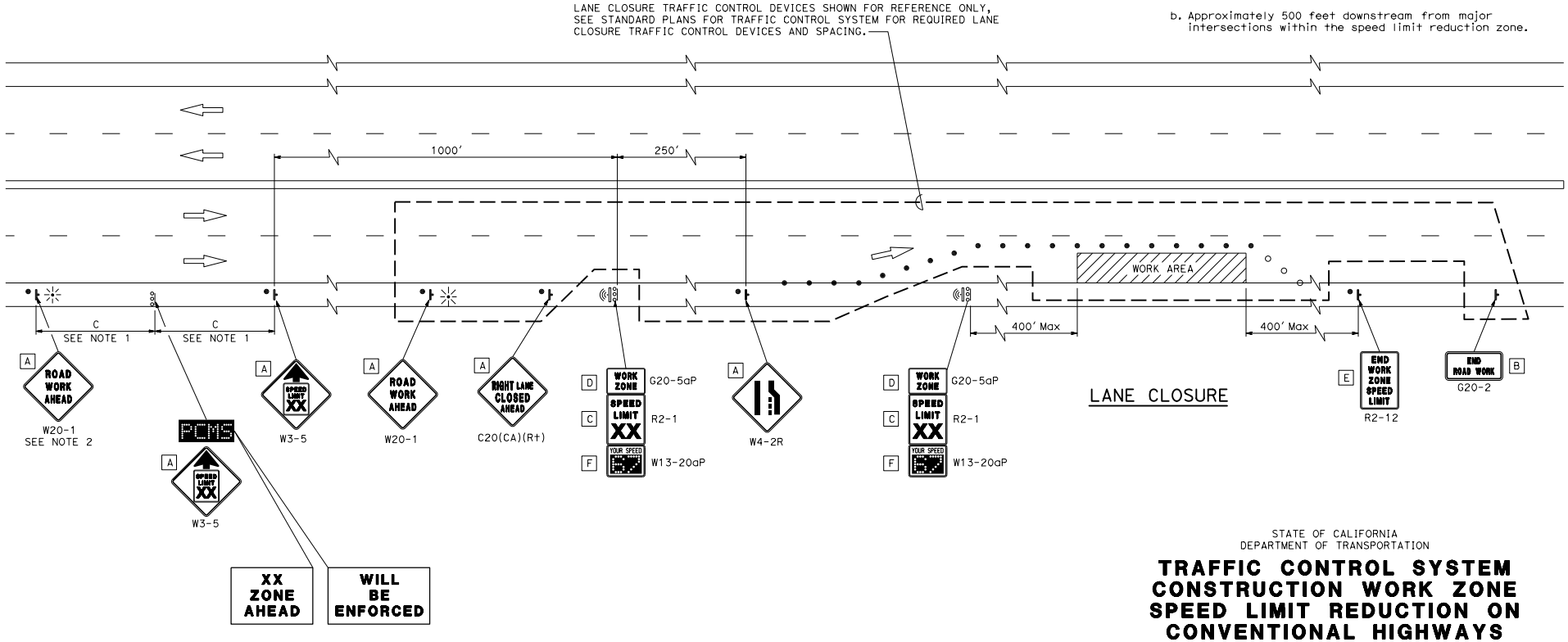

LANE CLOSURE

STATE OF CALIFORNIA
DEPARTMENT OF TRANSPORTATION

TRAFFIC CONTROL SYSTEM CONSTRUCTION WORK ZONE SPEED LIMIT REDUCTION ON CONVENTIONAL HIGHWAYS

NO SCALE

T19

7-1-26

Return to Table of Contents

Dist	COUNTY	ROUTE	POST MILES TOTAL PROJECT	SHEET No.	TOTAL SHEETS

REGISTERED CIVIL ENGINEER

September 18, 2026

PLANS APPROVAL DATE

REGISTERED PROFESSIONAL ENGINEER Mike Malyy No. C83437 Exp. 3-31-27 CIVIL STATE OF CALIFORNIA

THE STATE OF CALIFORNIA OR ITS OFFICERS OR AGENTS SHALL NOT BE RESPONSIBLE FOR THE ACCURACY OR COMPLETENESS OF SCANNED COPIES OF THIS PLAN SHEET.

SIGN SIZE (Min)		
	FREEWAY AND EXPRESSWAY	CONVENTIONAL SINGLE LANE AND MULTILANE
A	36" x 48"	24" x 30"
B	36" x 24"	24" x 18"
C	36" x 54"	24" x 36"
D	36" x 30"	24" x 18"
E	48" x 48"	48" x 48"

LEGEND:

- PCMS — PORTABLE CHANGEABLE MESSAGE SIGN
- PORTABLE FLASHING BEACON
- PORTABLE RADAR SPEED FEEDBACK SIGN SYSTEM
- SUPPORT OR TRAILER
- TEMPORARY TRAFFIC CONTROL SIGN
- TRAFFIC CONE
- TRAFFIC CONE (OPTIONAL TAPER)

NOTES:

1. See Standard Plan T9 for Table 3 showing advance warning signs spacing.
2. Duplicate sign installations are not required:
   a) On opposite shoulder if at least one-half of the available lanes remain open to traffic.
   b) In the median if the width of the median shoulder is less than 8' and the outside lanes are to be closed.
3. Place a W20-1 sign in advance of the PCMS, when the PCMS is placed upstream of the W20-1 construction area sign.
4. Place the R3(CA) sign 400 feet downstream from the end of the last work area and place an additional vehicle speed feedback sign system 400 feet upstream from the beginning of each work area with a separation of more than 2 miles.
5. The distances shown for sign spacing are approximate and should be applied with engineering judgment. The distances should be adjusted by the Engineer for field conditions, by increasing or decreasing the recommended distances.

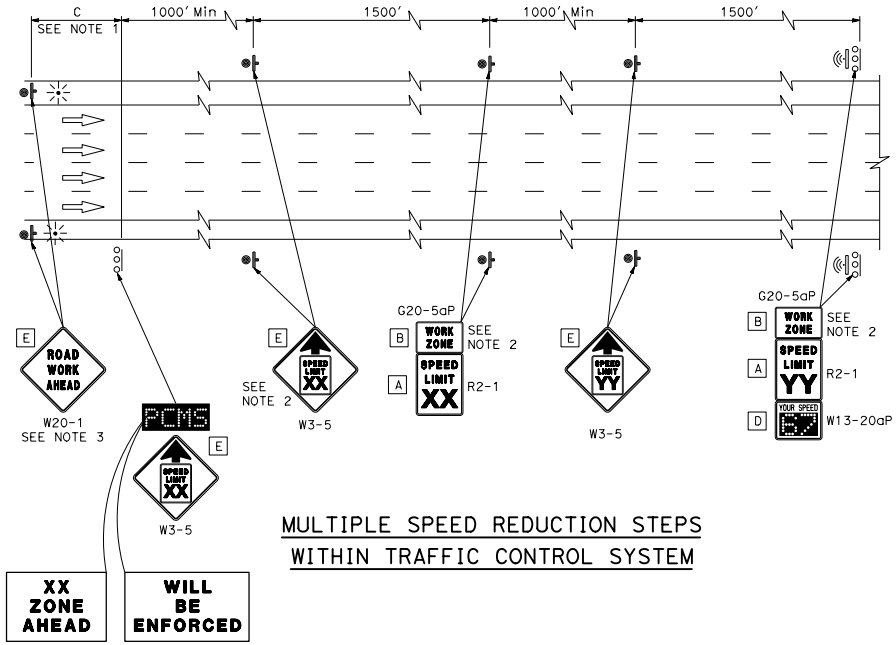

MULTIPLE SPEED REDUCTION STEPS
WITHIN TRAFFIC CONTROL SYSTEM

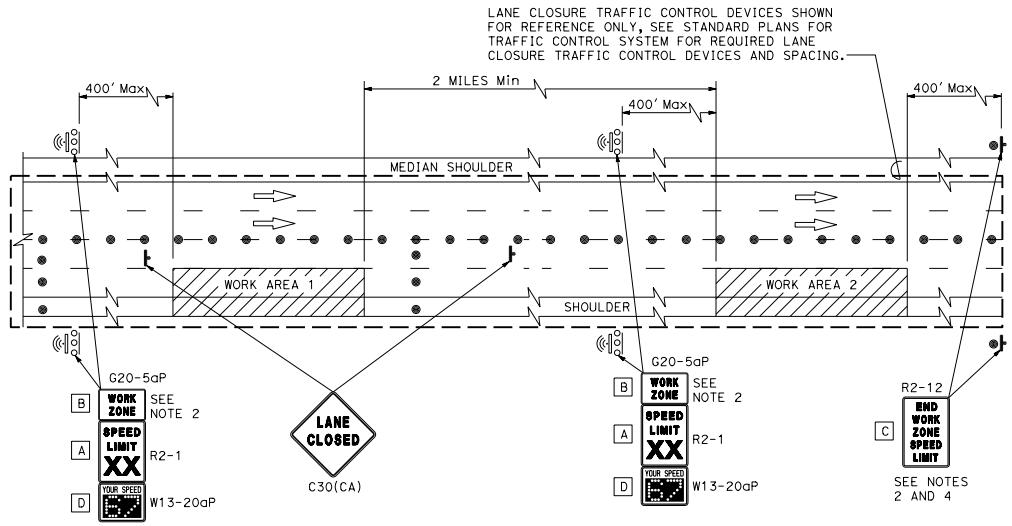

MULTIPLE WORK AREAS
WITHIN TRAFFIC CONTROL SYSTEM

STATE OF CALIFORNIA
DEPARTMENT OF TRANSPORTATION

TRAFFIC CONTROL SYSTEM CONSTRUCTION WORK ZONE SPEED LIMIT REDUCTION DETAILS

NO SCALE

T20

7-1-26

2026 STANDARD PLAN T20

Return to Table of Contents

Dist	COUNTY	ROUTE	POST MILES TOTAL PROJECT	SHEET No.	TOTAL SHEETS

REGISTERED CIVIL ENGINEER

September 18, 2026

PLANS APPROVAL DATE

Mike Malyy No. C83437 Exp. 3-31-27 CIVIL STATE OF CALIFORNIA REGISTERED PROFESSIONAL ENGINEER

THE STATE OF CALIFORNIA OR ITS OFFICERS OR AGENTS SHALL NOT BE RESPONSIBLE FOR THE ACCURACY OR COMPLETENESS OF SCANNED COPIES OF THIS PLAN SHEET.

SIGN SIZE (Min)		
	FREEWAY AND EXPRESSWAY	CONVENSIONAL SINGLE LANE AND MULTILANE
A	36" x 48"	24" x 30"
B	36" x 24"	24" x 18"
C	36" x 54"	24" x 36"
D	36" x 30"	24" x 18"
E	48" x 48"	48" x 48"

LEGEND:

- PCMS — PORTABLE CHANGEABLE MESSAGE SIGN
- PORTABLE FLASHING BEACON
- SUPPORT OR TRAILER
- TEMPORARY RADAR SPEED FEEDBACK SIGN SYSTEM
- TEMPORARY TRAFFIC CONTROL SIGN
- TRAFFIC CONE
- TRAFFIC CONE (OPTIONAL TAPER)

NOTES:

1. See Standard Plan T9 for table showing advance warning signs spacing.
2. Duplicate sign installations are not required:
   a. On opposite shoulder if at least one-half of the available lanes remain open to traffic.
   b. In the median if the width of the median shoulder is less than 8' and the outside lanes are to be closed.
3. Place additional R2-1 sign and G20-5aP plaque:
   a. Where speed limit reduction zones are longer than 3 miles. Place intermediate sign at approximately 3-mile spacing throughout the speed limit reduction zone.
   b. At each entrance ramp within the speed limit reduction zone.
   c. Approximately 500 feet downstream from major intersections within the speed limit reduction zone.
4. Place advance warning sign for the roadway condition that requires the construction work zone speed limit reduction. Place intermediate advance warning signs at approximately 3-mile spacing throughout the speed limit reduction zone, when speed limit reduction zones are longer than 3 miles.

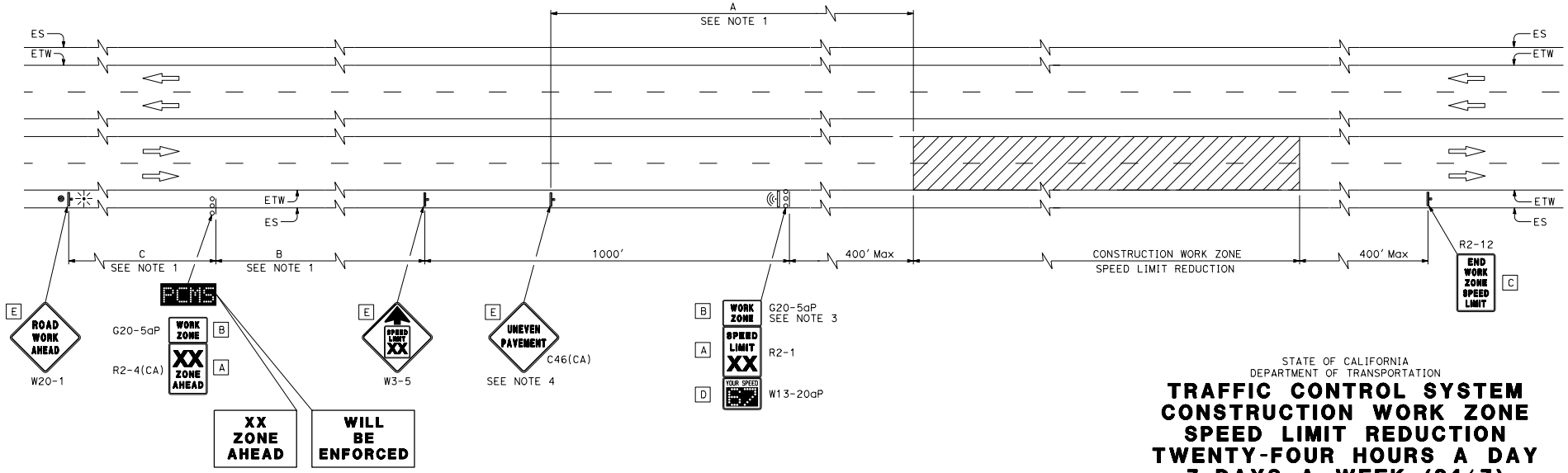

STATE OF CALIFORNIA
DEPARTMENT OF TRANSPORTATION

TRAFFIC CONTROL SYSTEM CONSTRUCTION WORK ZONE SPEED LIMIT REDUCTION TWENTY-FOUR HOURS A DAY 7 DAYS A WEEK (24/7)

NO SCALE

T21

2026 STANDARD PLAN T21

7-1-26

Return to Table of Contents

LEGEND:

- FLAGGER
- PCMS — PORTABLE CHANGEABLE MESSAGE SIGN (PCMS)
- PORTABLE FLASHING BEACON
- PORTABLE RADAR SPEED FEEDBACK SIGN SYSTEM (PRSFSS)
- PRSFSS SUPPORT OR TRAILER
- TEMPORARY TRAFFIC CONTROL SIGN
- TRAFFIC CONE

SIGN PANEL SIZE (Min)	
A	48" x 48"
B	24" x 30"
C	24" x 18"
D	24" x 24"
E	24" x 36"

NOTES:

1. See Standard Plan T9, Table 3 for advanced warning sign spacing.
2. The distance B to the PRSFS is measured from the C29(CA) sign or the PCMS at the Advance Flagger Station.
3. If rumble strips are not used, the distance B to PRSFS is measured from W20-4.

Dist	COUNTY	ROUTE	POST MILES TOTAL PROJECT	SHEET No.	TOTAL SHEETS

REGISTERED CIVIL ENGINEER

September 18, 2026

PLANS APPROVAL DATE

Mike Malyy No. C83437 Exp. 3-31-27 CIVIL STATE OF CALIFORNIA REGISTERED PROFESSIONAL ENGINEER

THE STATE OF CALIFORNIA OR ITS OFFICERS OR AGENTS SHALL NOT BE RESPONSIBLE FOR THE ACCURACY OR COMPLETENESS OF SCANNED COPIES OF THIS PLAN SHEET.

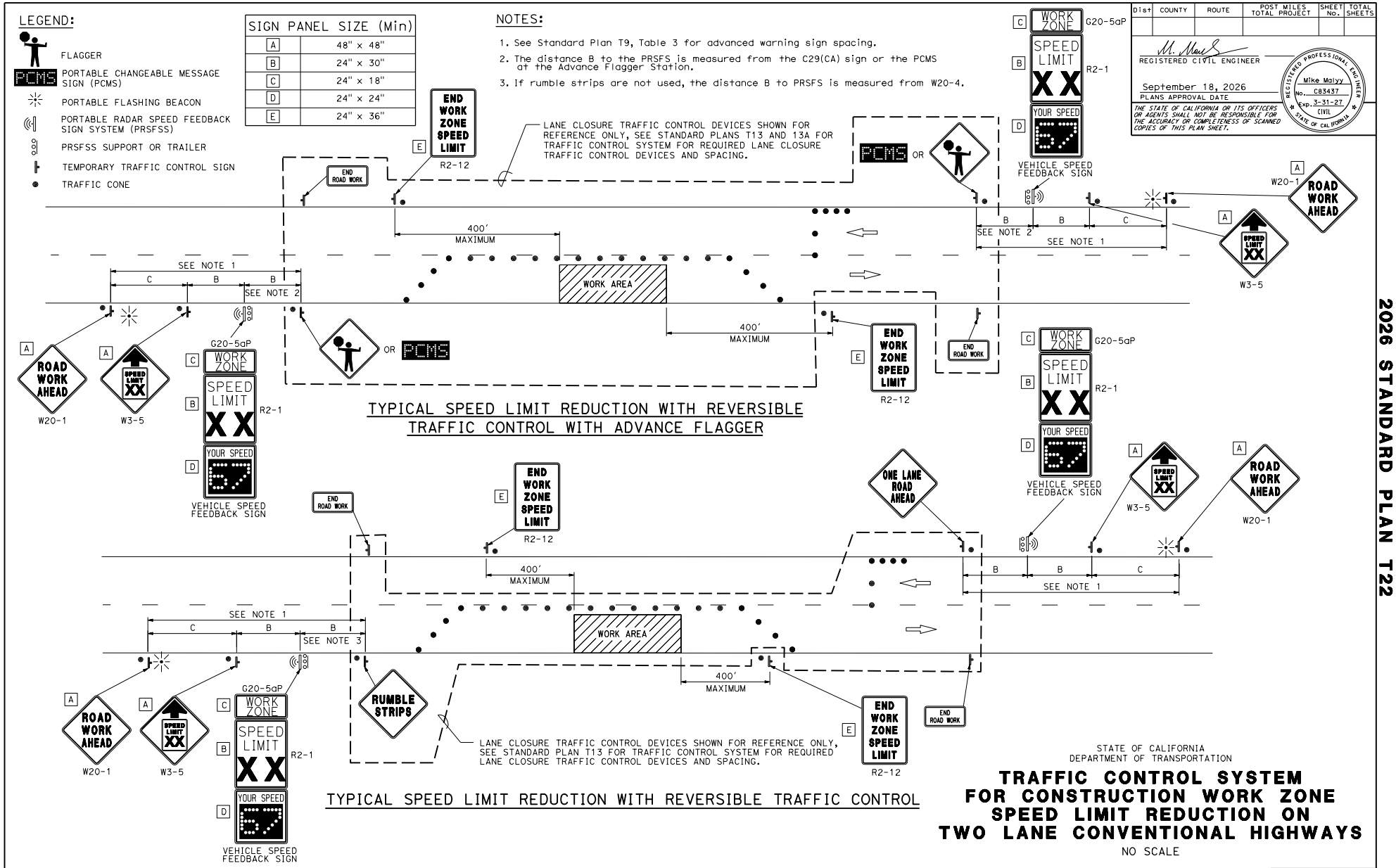

STATE OF CALIFORNIA
DEPARTMENT OF TRANSPORTATION

TRAFFIC CONTROL SYSTEM FOR CONSTRUCTION WORK ZONE SPEED LIMIT REDUCTION ON TWO LANE CONVENTIONAL HIGHWAYS

NO SCALE

T22

7-1-26

2026 STANDARD PLAN T22

Return to Table of Contents

Dist	COUNTY	ROUTE	POST MILES TOTAL PROJECT	SHEET No.	TOTAL SHEETS

Jawad Naderi
REGISTERED CIVIL ENGINEER

September 18, 2026
PLANS APPROVAL DATE

REGISTERED PROFESSIONAL ENGINEER
Mohammad Jawad Naderi
No. C96340
Exp. 9-30-26
CIVIL
STATE OF CALIFORNIA

THE STATE OF CALIFORNIA OR ITS OFFICERS OR AGENTS SHALL NOT BE RESPONSIBLE FOR THE ACCURACY OR COMPLETENESS OF SCANNED COPIES OF THIS PLAN SHEET.

LEGEND:

- IMPACT ATTENUATOR
- PCMS — PORTABLE CHANGEABLE MESSAGE SIGN
- REPOSITIONING MOBILE BARRIER
- SUPPORT OR TRAILER
- TEMPORARY TRAFFIC CONTROL SIGN
- TRAFFIC CONE
- TRAFFIC CONE (OPTIONAL)
- TYPE I FLASHING ARROW SIGN
- TYPE II FLASHING ARROW SIGN ALTERNATING DIAMONDS
- TYPE II FLASHING ARROW SIGN FLASHING CAUTION MODE

NOTES:

1. Channelizing devices shown adjacent to the mobile barrier may be removed or not placed while the mobile barrier is stationary, but must be placed or replaced as the barrier moves within the closed lane.
2. See Standard Plan T9 for tables.
3. Place one impact attenuator vehicle per closed internal lane adjacent to the mobile barrier.
4. Use a separate vehicle mounted PCMS or Arrow Board, when a PCMS or Arrow Board is not installed on the mobile barrier.

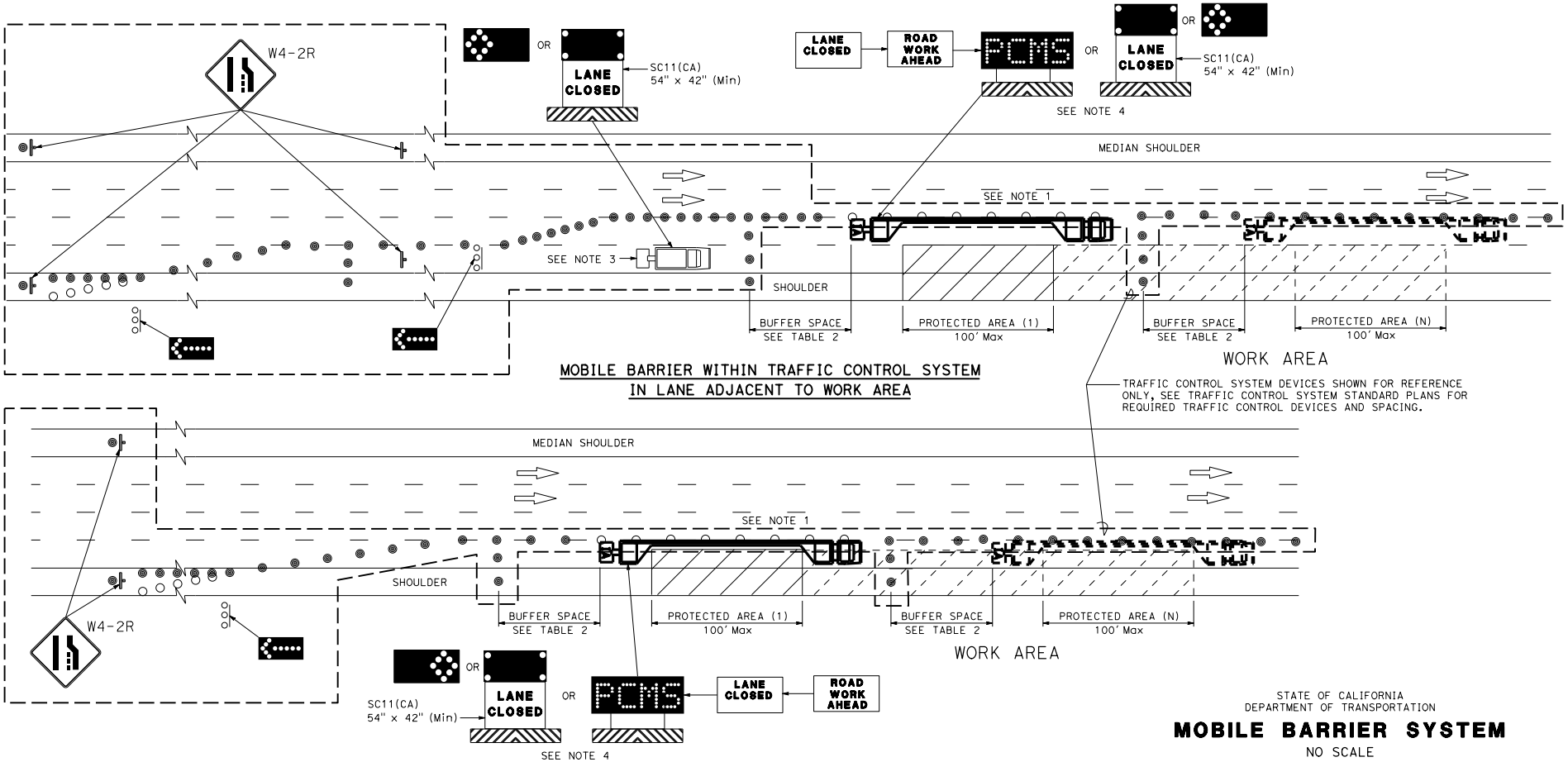

MOBILE BARRIER WITHIN TRAFFIC CONTROL SYSTEM
IN LANE ADJACENT TO WORK AREA

MOBILE BARRIER WITHIN TRAFFIC CONTROL SYSTEM

STATE OF CALIFORNIA
DEPARTMENT OF TRANSPORTATION

MOBILE BARRIER SYSTEM

NO SCALE

T24

7-1-26

2026 STANDARD PLAN T24

Return to Table of Contents

Dist	COUNTY	ROUTE	POST MILES TOTAL PROJECT	SHEET No.	TOTAL SHEETS

Jawad Naderi
REGISTERED CIVIL ENGINEER

September 18, 2026
PLANS APPROVAL DATE

REGISTERED PROFESSIONAL ENGINEER
Mohammad Jawad Naderi
No. C96340
Exp. 9-30-26
CIVIL
STATE OF CALIFORNIA

THE STATE OF CALIFORNIA OR ITS OFFICERS OR AGENTS SHALL NOT BE RESPONSIBLE FOR THE ACCURACY OR COMPLETENESS OF SCANNED COPIES OF THIS PLAN SHEET.

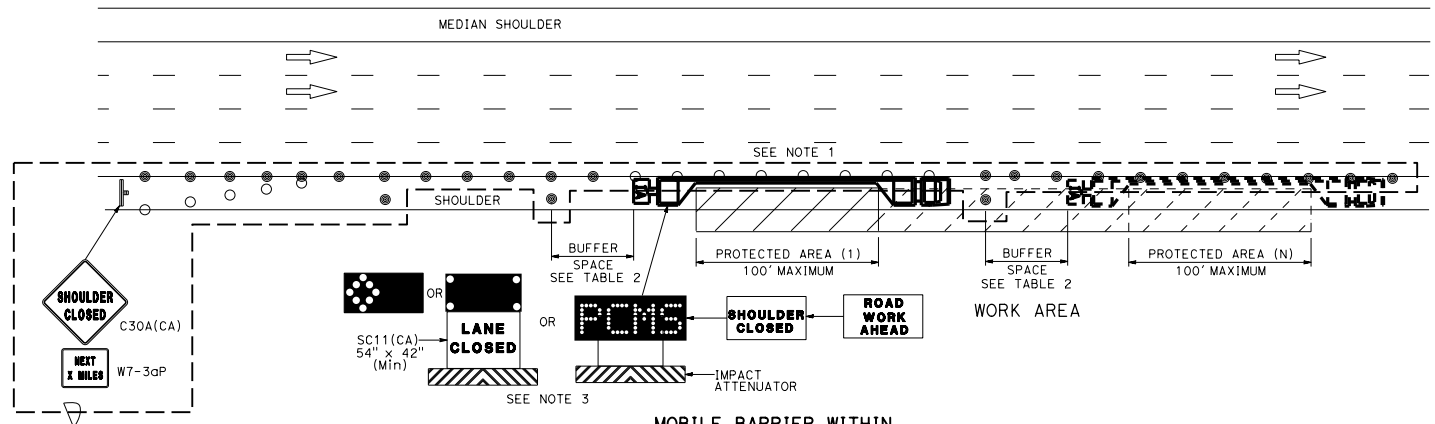

TRAFFIC CONTROL DEVICES SHOWN FOR REFERENCE ONLY, SEE TRAFFIC CONTROL SYSTEM STANDARD PLANS FOR REQUIRED TRAFFIC CONTROL DEVICES AND SPACING.

MOBILE BARRIER WITHIN SHOULDER TRAFFIC CONTROL SYSTEM

NOTES:

1. Channelizing devices shown adjacent to the mobile barrier may be removed or not placed while the mobile barrier is stationary, but must be placed or replaced as the barrier moves within the closed lane.
2. See Standard Plan T9 for tables.
3. Use a separate vehicle mounted PCMS or Arrow Board, when a PCMS or Arrow Board is not installed on the mobile barrier.

LEGEND:

- FLAGGER
- IMPACT ATTENUATOR
- PCMS — PORTABLE CHANGEABLE MESSAGE SIGN
- REPOSITIONING MOBILE BARRIER
- TEMPORARY TRAFFIC CONTROL SIGN
- TRAFFIC CONE
- TRAFFIC CONE (OPTIONAL)
- TYPE II FLASHING ARROW SIGN ALTERNATING DIAMONDS
- TYPE II FLASHING ARROW SIGN FLASHING CAUTION MODE

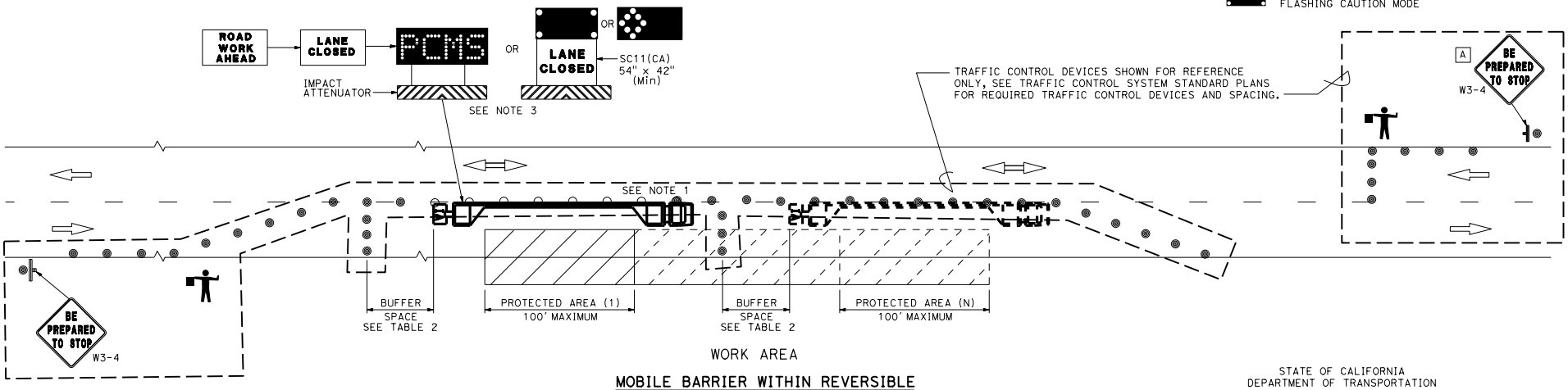

MOBILE BARRIER WITHIN REVERSIBLE TRAFFIC CONTROL SYSTEM

STATE OF CALIFORNIA
DEPARTMENT OF TRANSPORTATION

MOBILE BARRIER SYSTEM

NO SCALE

T25

2026 STANDARD PLAN T25

7-1-26

Return to Table of Contents

Dist	COUNTY	ROUTE	POST MILES TOTAL PROJECT	SHEET No.	TOTAL SHEETS

REGISTERED CIVIL ENGINEER

September 18, 2026
PLANS APPROVAL DATE

REGISTERED PROFESSIONAL ENGINEER Mike Malyy No. C83437 Exp. 3-31-27 CIVIL STATE OF CALIFORNIA

THE STATE OF CALIFORNIA OR ITS OFFICERS OR AGENTS SHALL NOT BE RESPONSIBLE FOR THE ACCURACY OR COMPLETENESS OF SCANNED COPIES OF THIS PLAN SHEET.

OPERATIONAL GUIDELINE FOR PCMS MESSAGES FOR POSTED SPEED LIMIT 55 MPH

MESSAGE AT ⑤	LAST 5 Min SPEED AVERAGES, V(MPH)			
	SENSOR AT ④	SENSOR AT ③	SENSOR AT ②	SENSOR AT ①
ROAD WORK AHEAD	> 45	> 45	> 45	=> 45
SLOW TRAFFIC 3 MILES	> 45	> 45	=> 45	25 < V < 45
SLOW TRAFFIC 2 MILES	> 45	=> 45	25 < V < 45	---
SLOW TRAFFIC 1 MILE	=> 45	25 < V < 45	---	---
SLOW TRAFFIC AHEAD	25 < V < 45	---	---	---
STOPPED TRAFFIC 3 MILES	> 25	> 25	> 25	<= 25
STOPPED TRAFFIC 2 MILES	> 25	> 25	<= 25	---
STOPPED TRAFFIC 1 MILE	> 25	<= 25	---	---
STOPPED TRAFFIC AHEAD	<= 25	---	---	---

For other posted speed limits adjust speeds shown on the table by adding or subtracting the calculated speed adjustment using the following formula:

Speed Adjustment = X posted speed limit - 55 mph

Add speed adjustments to speed averages.

LEGEND:

- FLASHING ARROW SIGN (FAS)
- LOCATION
- PORTABLE CHANGEABLE MESSAGE SIGN (PCMS)
- PORTABLE FLASHING BEACON
- PORTABLE VEHICLE SPEED SENSOR
- SIGN
- SUPPORT OR TRAILER
- TRAFFIC CONE
- TRAFFIC CONE (OPTIONAL TAPER)

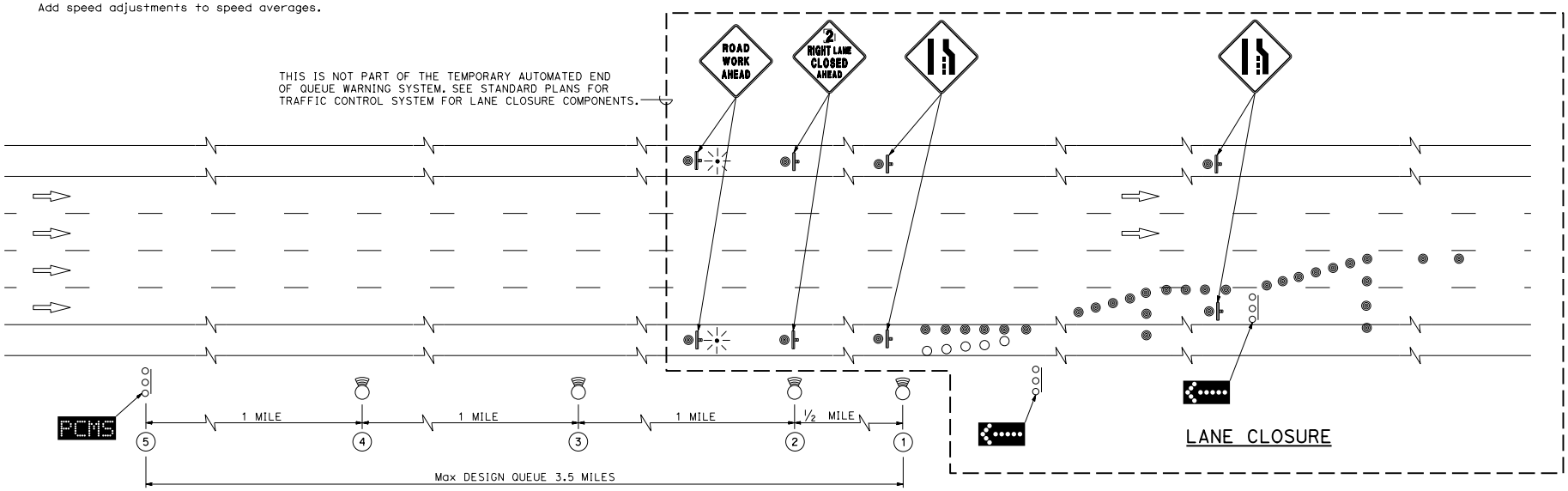

STATE OF CALIFORNIA
DEPARTMENT OF TRANSPORTATION

TEMPORARY AUTOMATED END OF QUEUE WARNING SYSTEM TYPE 1 (QUEUE <= 3.5 MILES)

NO SCALE

T26

7-1-26

2026 STANDARD PLAN T26

Return to Table of Contents

Dist	COUNTY	ROUTE	POST MILES TOTAL PROJECT	SHEET No.	TOTAL SHEETS

REGISTERED CIVIL ENGINEER

September 18, 2026
PLANS APPROVAL DATE

REGISTERED PROFESSIONAL ENGINEER
Mike Malyy
No. C83437
Exp. 3-31-27
CIVIL
STATE OF CALIFORNIA

THE STATE OF CALIFORNIA OR ITS OFFICERS OR AGENTS SHALL NOT BE RESPONSIBLE FOR THE ACCURACY OR COMPLETENESS OF SCANNED COPIES OF THIS PLAN SHEET.

OPERATIONAL GUIDELINE FOR PCMS MESSAGES FOR POSTED SPEED LIMIT 55 MPH

MESSAGE AT ⑨	LAST 5 Min SPEED AVERAGES, V(MPH)				MESSAGE AT ⑤	LAST 5 Min SPEED AVERAGES, V(MPH)			
	SENSOR AT ⑧	SENSOR AT ⑦	SENSOR AT ⑥	SENSOR AT ⑤		SENSOR AT ④	SENSOR AT ③	SENSOR AT ②	SENSOR AT ①
ROAD WORK AHEAD	> 45	> 45	> 45	=> 45	ROAD WORK AHEAD	> 45	> 45	> 45	=> 45
SLOW TRAFFIC 3 MILES	> 45	> 45	=> 45	25 < V < 45	SLOW TRAFFIC 3 MILES	> 45	> 45	=> 45	25 < V < 45
SLOW TRAFFIC 2 MILES	> 45	=> 45	25 < V < 45	---	SLOW TRAFFIC 2 MILES	> 45	=> 45	25 < V < 45	---
SLOW TRAFFIC 1 MILE	=> 45	25 < V < 45	---	---	SLOW TRAFFIC 1 MILE	=> 45	25 < V < 45	---	---
SLOW TRAFFIC AHEAD	25 < V < 45	---	---	---	SLOW TRAFFIC AHEAD	25 < V < 45	---	---	---
STOPPED TRAFFIC 3 MILES	> 25	> 25	> 25	<= 25	STOPPED TRAFFIC 3 MILES	> 25	> 25	> 25	<= 25
STOPPED TRAFFIC 2 MILES	> 25	> 25	<= 25	---	STOPPED TRAFFIC 2 MILES	> 25	> 25	<= 25	---
STOPPED TRAFFIC 1 MILE	> 25	<= 25	---	---	STOPPED TRAFFIC 1 MILE	> 25	<= 25	---	---
STOPPED TRAFFIC AHEAD	<= 25	---	---	---	STOPPED TRAFFIC AHEAD	<= 25	---	---	---

For other posted speed limits adjust speeds shown on the table by adding or subtracting the calculated speed adjustment using the following formula:

Speed Adjustment = X posted speed limit - 55 mph

Add speed adjustments to speed averages.

LEGEND:

- FLASHING ARROW SIGN (FAS)
- (1) LOCATION
- PCMS PORTABLE CHANGEABLE MESSAGE SIGN (PCMS)
- PORTABLE FLASHING BEACON
- PORTABLE VEHICLE SPEED SENSOR
- SIGN
- SUPPORT OR TRAILER
- TRAFFIC CONE
- TRAFFIC CONE (OPTIONAL TAPER)

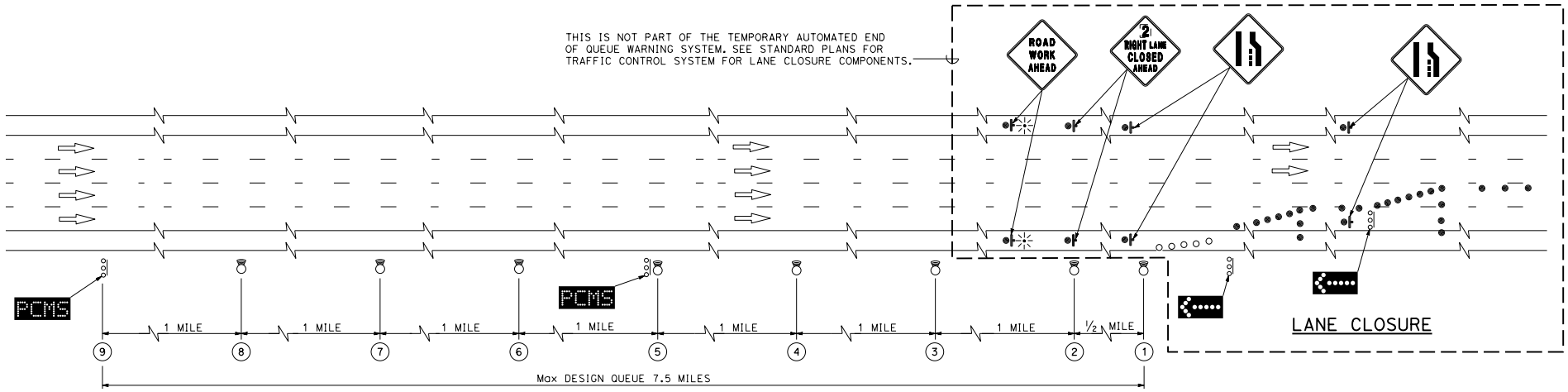

STATE OF CALIFORNIA
DEPARTMENT OF TRANSPORTATION

TEMPORARY AUTOMATED END OF QUEUE WARNING SYSTEM TYPE 2 (QUEUE <= 7.5 MILES)

NO SCALE

T27

2026 STANDARD PLAN T27

7-1-26

Return to Table of Contents

Dist	COUNTY	ROUTE	POST MILES TOTAL PROJECT	SHEET No.	TOTAL SHEETS

REGISTERED CIVIL ENGINEER

September 18, 2026
PLANS APPROVAL DATE

REGISTERED PROFESSIONAL ENGINEER
Mike Malyy
No. C83437
Exp. 3-31-27
CIVIL
STATE OF CALIFORNIA

THE STATE OF CALIFORNIA OR ITS OFFICERS OR AGENTS SHALL NOT BE RESPONSIBLE FOR THE ACCURACY OR COMPLETENESS OF SCANNED COPIES OF THIS PLAN SHEET.

NOTES:

See Standard Plan T9 for tables.

Use cone spacing X for taper segment, Y for tangent segment or Z for conflict situations per Table 1 unless X, Y, or Z cone spacing is shown on this sheet.

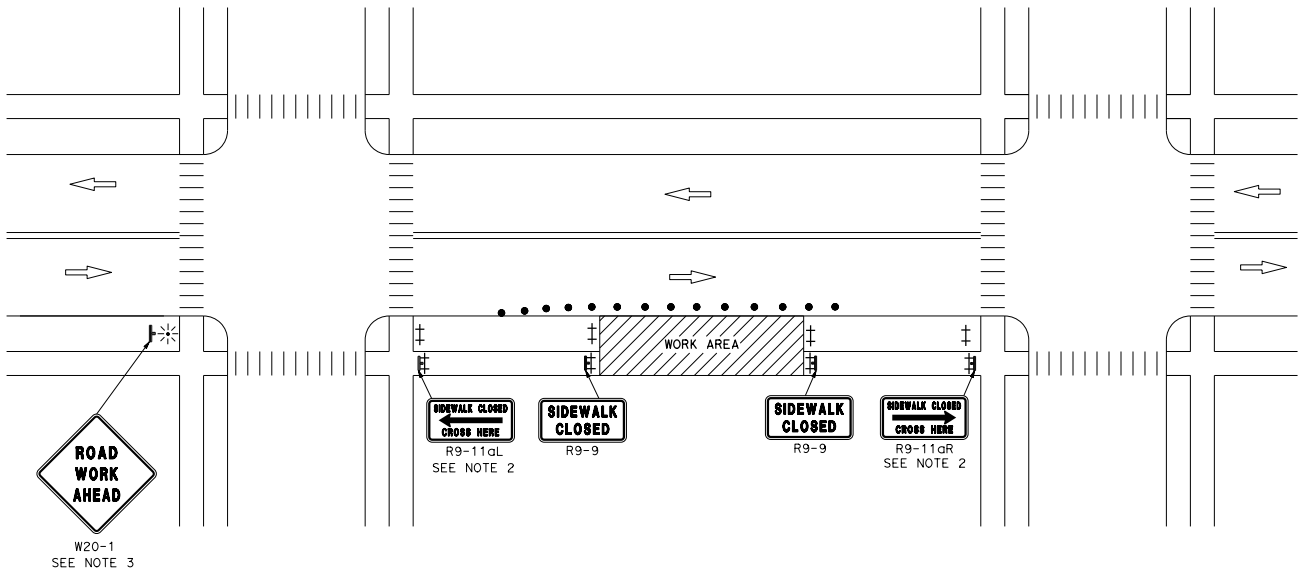

NOTES:

1. Only signs related to pedestrians are shown. For all other signs see appropriate T sheets.
2. Cover the full width of the sidewalk when using barricades to close the sidewalk. Use R9-11 sign when there are destination points between the detour and the work area. Place the R9-11 sign to allow pedestrian access.
3. Do not place the advance warning sign if the work area is within the limits of a larger work zone. Install at least two flags on sign, for daytime closure. Flags must be orange or fluorescent red-orange in color.

LEGEND:

- BARRICADE
- PORTABLE FLASHING BEACON
- SIGN
- TEMPORARY TRAFFIC CONTROL SIGN ON BARRICADE
- TRAFFIC CONE

SIGN PANEL SIZE (Min)		
SIGN DESIGNATION	SIGN OR PLAQUE	SIGN SIZE
R9-9	SIDEWALK CLOSED	24" x 12"
R9-11	SIDEWALK CLOSED AHEAD CROSS HERE	24" x 18"
R9-11aL/R9-11aR	SIDEWALK CLOSED CROSS HERE	24" x 12"
W20-1	ROAD WORK AHEAD	36" x 36"

STATE OF CALIFORNIA
DEPARTMENT OF TRANSPORTATION

TEMPORARY PEDESTRIAN ACCESS ROUTES TYPICAL SIDEWALK CLOSURE AND PEDESTRIAN DETOUR

NO SCALE

T30

2026 STANDARD PLAN T30

7-1-26

Return to Table of Contents

SIGN PANEL SIZE (Min)		
SIGN DESIGNATION	SIGN OR PLAQUE	SIGN SIZE
M4-9bL/M4-9bR	PEDESTRIAN DETOUR	30" x 24"
R9-9	SIDEWALK CLOSED	24" x 12"
W20-1	ROAD WORK AHEAD	36" x 36"

NOTES:

See Standard Plan T9 for tables.

Use cone spacing X for taper segment, Y for tangent segment or Z for conflict situations per Table 1 unless X, Y, or Z cone spacing is shown on this sheet.

Dist	COUNTY	ROUTE	POST MILES TOTAL PROJECT	SHEET No.	TOTAL SHEETS

REGISTERED CIVIL ENGINEER

September 18, 2026

PLANS APPROVAL DATE

REGISTERED PROFESSIONAL ENGINEER Mike Malyy No. C83437 Exp. 3-31-27 CIVIL STATE OF CALIFORNIA

THE STATE OF CALIFORNIA OR ITS OFFICERS OR AGENTS SHALL NOT BE RESPONSIBLE FOR THE ACCURACY OR COMPLETENESS OF SCANNED COPIES OF THIS PLAN SHEET.

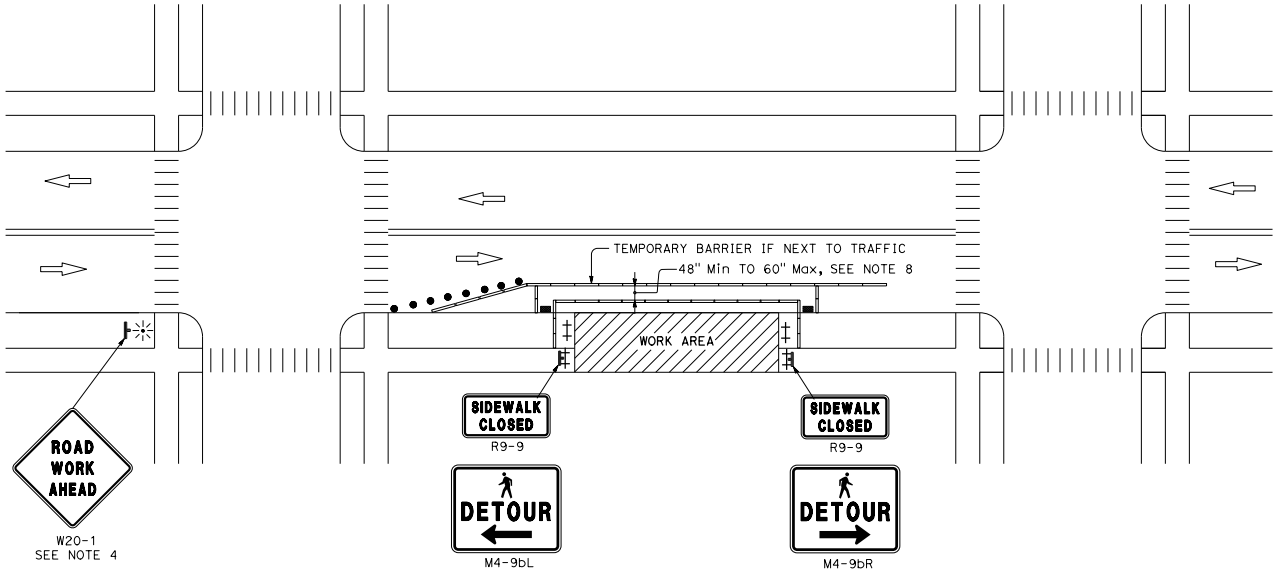

NOTES:

1. Only signs related to pedestrians are shown. For all other signs, see appropriate T sheets.
2. Separate pedestrian walkway from traffic and work zone activities, when temporary walkway is adjacent to traffic.
3. The temporary pedestrian access route must not lead into conflict with vehicles or work.
4. Do not place advance warning sign if the work area is within the limits of a larger work zone. Install at least two flags on sign, for daytime closure. Flags must be orange or fluorescent red-orange in color.
5. All devices used to channelize pedestrian flow must connect such that gaps do not allow pedestrians to stray from the channelized path.
6. Cover the full width of the sidewalk when using barricades to close the sidewalk.
7. Separate the temporary pedestrian access route from traffic using a temporary barrier and a crash cushion if necessary.
8. When it is not possible to maintain a minumum of 60 inches throughout the length of the pedestrian route, maintain a minimum width of 48 inches and provide a 60 x 60 inch passing space at least every 200 feet.
9. See Standard Plan A88A for detectable warning surface for curb ramps to apply to temporary curb ramps.
10. See Standard Plan T34 for temporary curb ramp options.

LEGEND:

- BARRICADE
- CHANNELIZING DEVICE
- PORTABLE FLASHING BEACON
- TEMPORARY CURB RAMP
- TEMPORARY TRAFFIC CONTROL SIGN
- TEMPORARY TRAFFIC CONTROL SIGN ON BARRICADE
- TRAFFIC CONE

STATE OF CALIFORNIA
DEPARTMENT OF TRANSPORTATION

TEMPORARY PEDESTRIAN ACCESS ROUTES TYPICAL SIDEWALK DIVERSION WITHIN ROADBED

NO SCALE

T31

2026 STANDARD PLAN T31

7-1-26

Return to Table of Contents

Dist	COUNTY	ROUTE	POST MILES TOTAL PROJECT	SHEET No.	TOTAL SHEETS

REGISTERED CIVIL ENGINEER

September 18, 2026
PLANS APPROVAL DATE

REGISTERED PROFESSIONAL ENGINEER
Mike Malyy
No. C83437
Exp. 3-31-27
CIVIL
STATE OF CALIFORNIA

THE STATE OF CALIFORNIA OR ITS OFFICERS OR AGENTS SHALL NOT BE RESPONSIBLE FOR THE ACCURACY OR COMPLETENESS OF SCANNED COPIES OF THIS PLAN SHEET.

NOTES:

See Standard Plan T9 for tables.

Use cone spacing X for taper segment, Y for tangent segment or Z for conflict situations per Table 1 unless X, Y, or Z cone spacing is shown on this sheet.

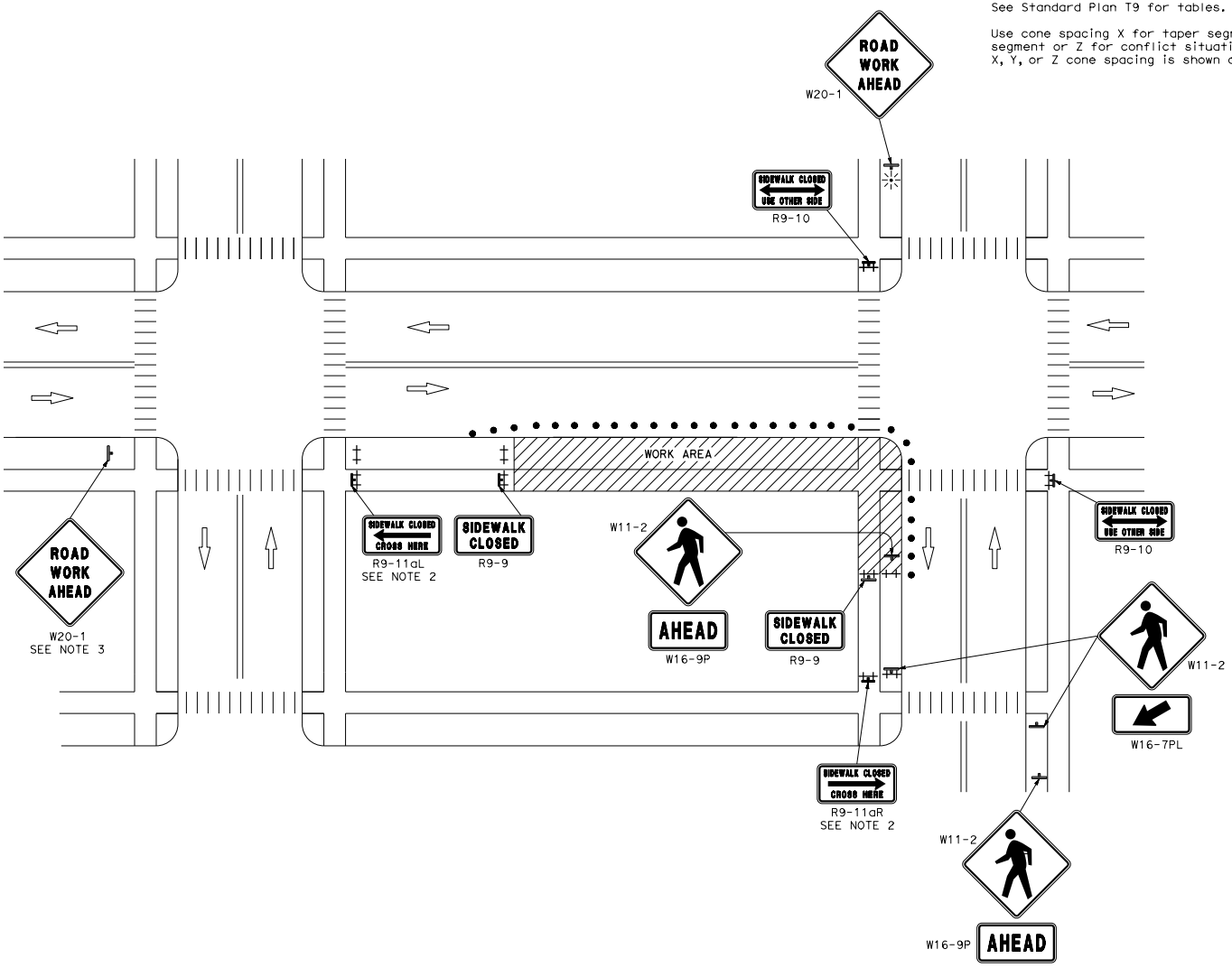

NOTES:

1. Only signs related to pedestrians are shown. For all other signs, see appropriate T sheets.
2. Cover the full width of the sidewalk when using barricades to close the sidewalk. Use R9-11 sign when there are destination points between the detour and the work area. Place the R9-11 sign to allow pedestrian access.
3. Do not place advance warning sign if the work area is within the limits of a larger work zone. Install at least two flags on sign, for daytime closure. Flags must be orange or fluorescent red-orange in color.

LEGEND:

- BARRICADE
- PORTABLE FLASHING BEACON
- TEMPORARY TRAFFIC CONTROL SIGN
- TEMPORARY TRAFFIC CONTROL SIGN ON BARRICADE
- TRAFFIC CONE

SIGN PANEL SIZE (Min)

SIGN DESIGNATION	SIGN OR PLAQUE	SIGN SIZE
R9-9	SIDEWALK CLOSED	24" x 12"
R9-10	SIDEWALK CLOSED USE OTHER SIDE	24" x 12"
R9-11	SIDEWALK CLOSED AHEAD CROSS HERE	24" x 18"
R9-11aL/R9-11aR	SIDEWALK CLOSED CROSS HERE	24" x 12"
W11-2	PEDESTRIAN	36" x 36"
W16-7PL/W16-7PR	DIAGONAL DOWNWARD POINTING ARROW (PLAQUE)	24" x 12"
W16-9P	AHEAD (PLAQUE)	24" x 12"
W20-1	ROAD WORK AHEAD	36" x 36"

STATE OF CALIFORNIA
DEPARTMENT OF TRANSPORTATION

TEMPORARY PEDESTRIAN ACCESS ROUTES TYPICAL SIDEWALK/CROSSWALK CLOSURE AND PEDESTRIAN DETOUR

NO SCALE

T32

2026 STANDARD PLAN T32

7-1-26

Return to Table of Contents

Dist	COUNTY	ROUTE	POST MILES TOTAL PROJECT	SHEET No.	TOTAL SHEETS

REGISTERED CIVIL ENGINEER

September 18, 2026

PLANS APPROVAL DATE

REGISTERED PROFESSIONAL ENGINEER Mike Malyy No. C83437 Exp. 3-31-27 CIVIL STATE OF CALIFORNIA

THE STATE OF CALIFORNIA OR ITS OFFICERS OR AGENTS SHALL NOT BE RESPONSIBLE FOR THE ACCURACY OR COMPLETENESS OF SCANNED COPIES OF THIS PLAN SHEET.

RAMP				HAND RAIL		EDGE PROTECTION	
SLOPE	CROSS SLOPE	WIDTH	LENGTH	HEIGHT RIGHT SIDE	HEIGHT LEFT SIDE	RAIL RIGHT SIDE	RAIL LEFT SIDE
A	B	C	D	E	F	G	H
8.3% OR LESS	2.0% OR LESS	48" OR GREATER	30'-0" OR LESS	34" TO 38"	34" TO 38"	WITHIN 2" FROM GROUND	WITHIN 2" FROM GROUND
TOP LANDING				BOTTOM LANDING			
CROSS SLOPE	SLOPE	WIDTH	DEPTH	CROSS SLOPE	SLOPE	WIDTH	DEPTH
I	J	K	L	M	N	O	P
2.0% OR LESS	2.0% OR LESS	48" OR GREATER	60" OR GREATER	2.0% OR LESS	2.0% OR LESS	48" OR GREATER	60" OR GREATER

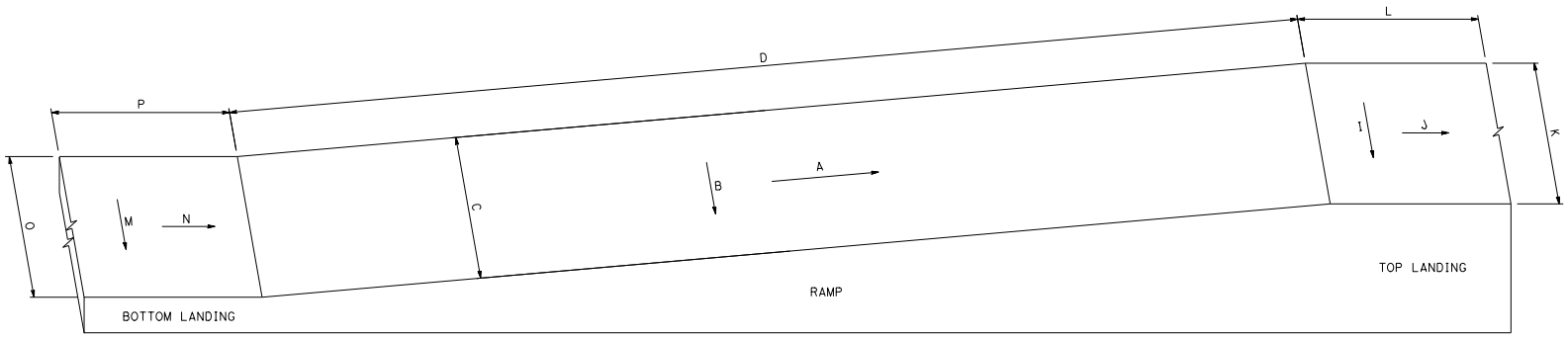

STATE OF CALIFORNIA
DEPARTMENT OF TRANSPORTATION

TEMPORARY PEDESTRIAN ACCESS ROUTES RAMP

NO SCALE

T33

7-1-26

2026 STANDARD PLAN T33

Return to Table of Contents

Dist	COUNTY	ROUTE	POST MILES TOTAL PROJECT	SHEET No.	TOTAL SHEETS

REGISTERED CIVIL ENGINEER

September 18, 2026

PLANS APPROVAL DATE

REGISTERED PROFESSIONAL ENGINEER Mike Malyy No. C83437 Exp. 3-31-27 CIVIL STATE OF CALIFORNIA

THE STATE OF CALIFORNIA OR ITS OFFICERS OR AGENTS SHALL NOT BE RESPONSIBLE FOR THE ACCURACY OR COMPLETENESS OF SCANNED COPIES OF THIS PLAN SHEET.

CURB RAMP			TOP LANDING				DETECTABLE WARNING SURFACE
SLOPE	CROSS SLOPE	WIDTH	CROSS SLOPE	SLOPE	WIDTH	DEPTH	DEPTH
A	B	C	D	E	F	G	K
8.3% OR LESS	2.0% OR LESS	48" OR GREATER	2.0% OR LESS	2.0% OR LESS	48" OR GREATER	60" OR GREATER	36" Min

NOTES:

If the above requirements cannot be met, on existing sites with space limitations, the following slopes are allowed:

For a maximum rise of 6" a slope between 1:12 to 1:10 is allowed.

For a maximum rise of 3" a slope between 1:10 to 1:8 is allowed.

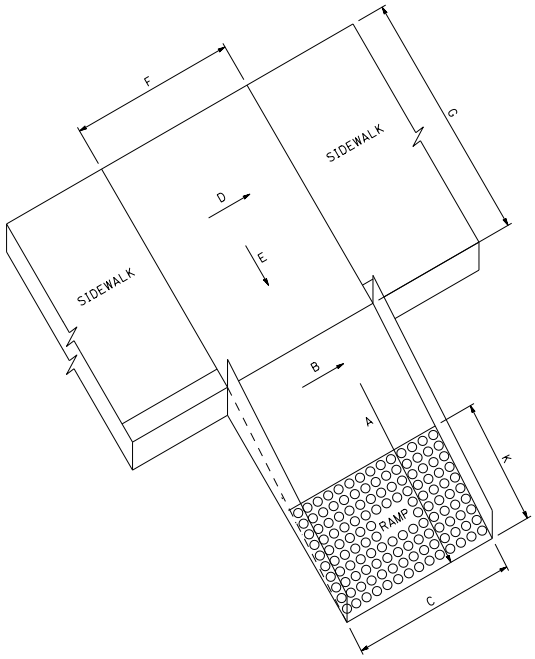

OPTION A

SHOWN WITH SIDE EDGE

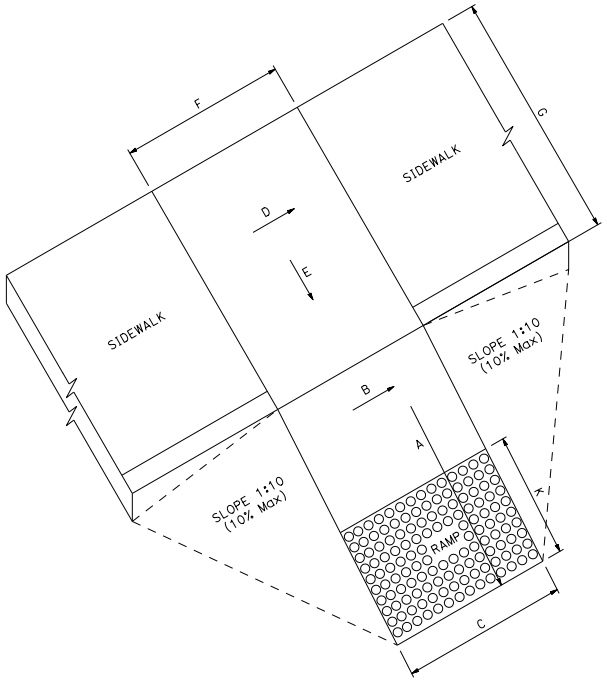

OPTION B

SHOWN WITH SIDE APRON

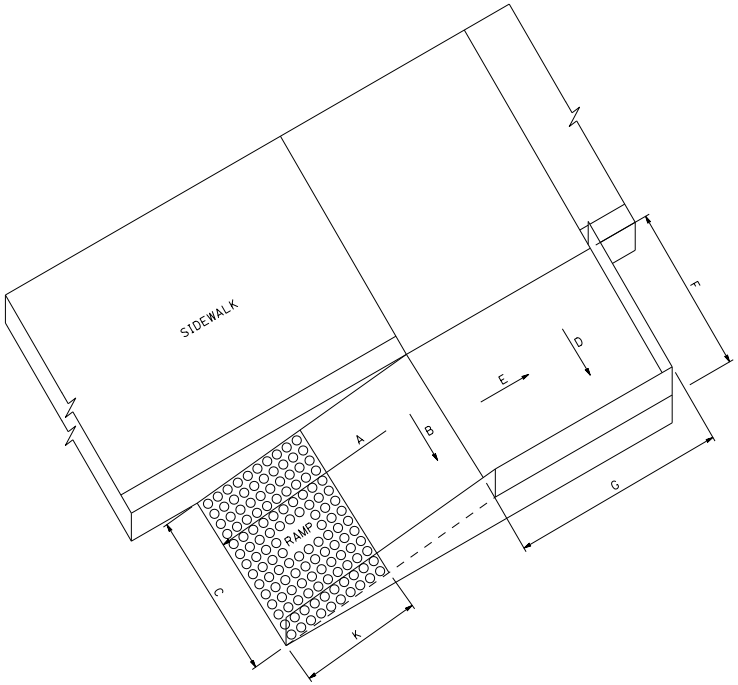

OPTION C

PARALLEL RAMP SHOWN WITH SIDE EDGE

STATE OF CALIFORNIA
DEPARTMENT OF TRANSPORTATION

TEMPORARY PEDESTRIAN ACCESS ROUTES CURB RAMP OPTIONS

NO SCALE

T34

2026 STANDARD PLAN T34

7-1-26

Return to Table of Contents

Dist	COUNTY	ROUTE	POST MILES TOTAL PROJECT	SHEET No.	TOTAL SHEETS

REGISTERED CIVIL ENGINEER

September 18, 2026

PLANS APPROVAL DATE

REGISTERED PROFESSIONAL ENGINEER Sean T. Penders No. C63744 Exp. 9-30-26 CIVIL STATE OF CALIFORNIA

THE STATE OF CALIFORNIA OR ITS OFFICERS OR AGENTS SHALL NOT BE RESPONSIBLE FOR THE ACCURACY OR COMPLETENESS OF SCANNED COPIES OF THIS PLAN SHEET.

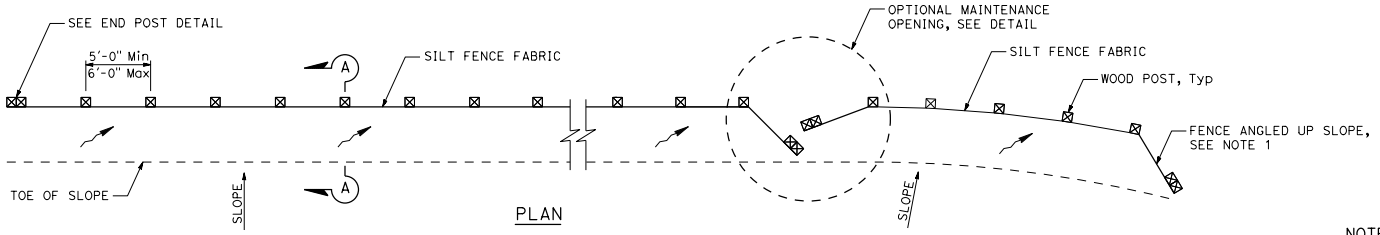

PLAN

TEMPORARY SILT FENCE

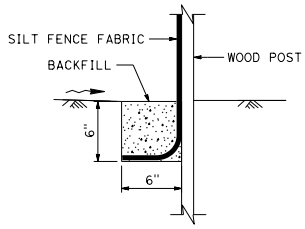

SECTION

TRENCH DETAIL

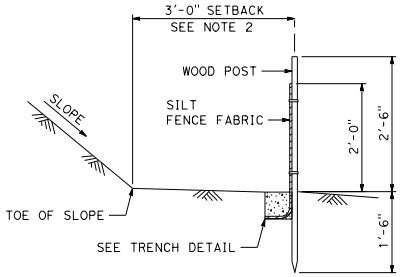

SECTION A-A

TEMPORARY SILT FENCE

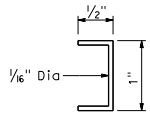

STAPLE DETAIL

See Note 6

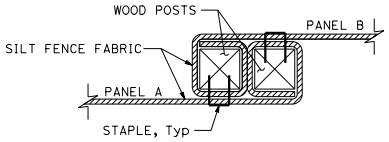

PLAN

POST AT JOINTS

See Note 3

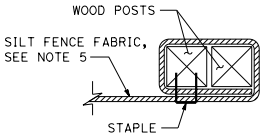

PLAN

END POST DETAIL

NOTES:

1. The downstream end of the temporary silt fence shall have the last 8'-0" angled up slope.
2. Setback dimensions may vary to fit field conditions.
3. Posts to overlap and fence fabric to fold around each post one full turn. Secure fabric with 4 staples for each post.
4. Posts shall be driven tightly together to prevent potential flow-through of sediment at the joint. The tops of the posts shall be secured to each other with wire.
5. For each end post, fence fabric shall be folded around two posts one full turn and secured with 4 staples.
6. Minimum of 4 staples shall be installed per post. Dimensions shown are typical.
7. Maintenance openings shall be constructed in a manner to ensure that sediment is retained by the temporary silt fence.
8. Joint sections shall not be placed at sump locations.

LEGEND:

- TAMPED BACKFILL
- SLOPE DIRECTION
- DIRECTION OF FLOW

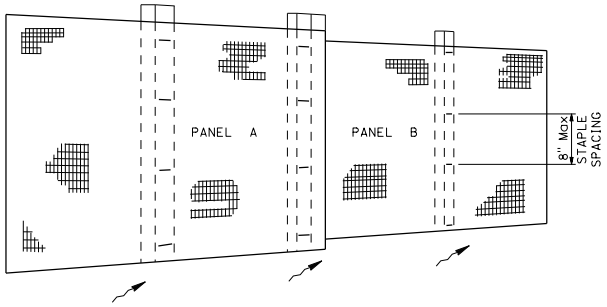

PERSPECTIVE

SILT FENCE PANELS AT JOINTS

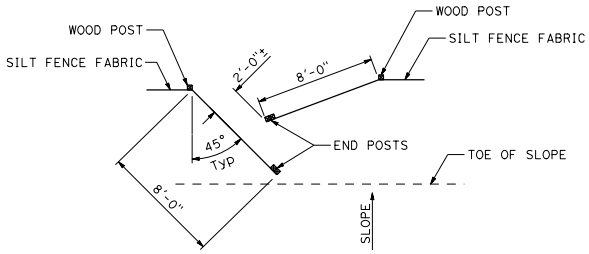

PLAN

OPTIONAL MAINTENANCE OPENING DETAIL

STATE OF CALIFORNIA
DEPARTMENT OF TRANSPORTATION

TEMPORARY WATER POLLUTION CONTROL DETAILS (TEMPORARY SILT FENCE)

NO SCALE

T51

2026 STANDARD PLAN T51

7-1-26

Return to Table of Contents

Dist	COUNTY	ROUTE	POST MILES TOTAL PROJECT	SHEET No.	TOTAL SHEETS

REGISTERED CIVIL ENGINEER

September 18, 2026

PLANS APPROVAL DATE

REGISTERED PROFESSIONAL ENGINEER Sean T. Penders No. C63744 Exp. 9-30-26 CIVIL STATE OF CALIFORNIA

THE STATE OF CALIFORNIA OR ITS OFFICERS OR AGENTS SHALL NOT BE RESPONSIBLE FOR THE ACCURACY OR COMPLETENESS OF SCANNED COPIES OF THIS PLAN SHEET.

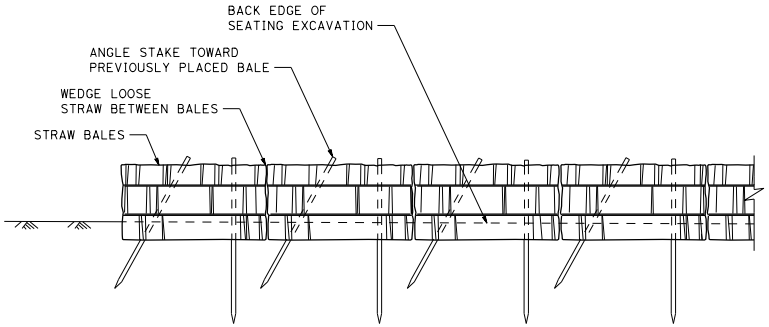

FRONT ELEVATION

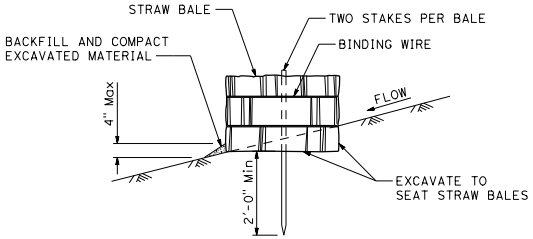

SECTION

TEMPORARY STRAW BALE BARRIER

NOTE:

1. Temporary silt fence and temporary high-visibility fence shown for reference purposes only.

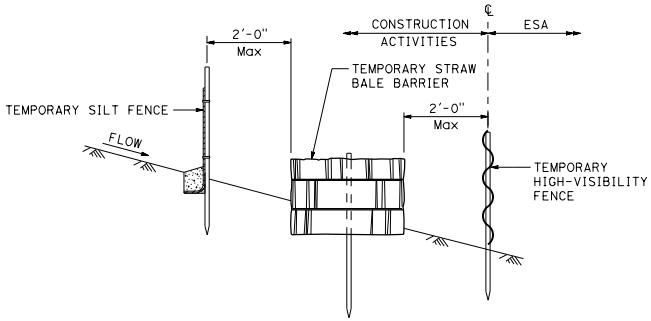

SECTION

PLACEMENT DETAIL FOR TEMPORARY SILT FENCE
AND TEMPORARY HIGH-VISIBILITY FENCE
USED WITH TEMPORARY STRAW BALE BARRIER

See Note 1

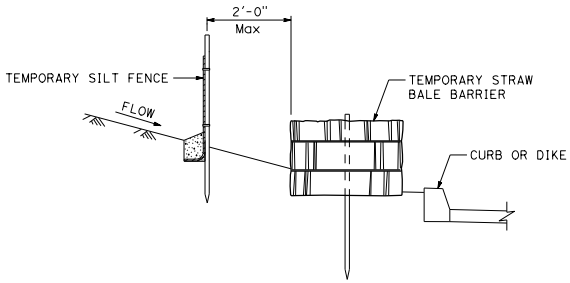

SECTION

PLACEMENT DETAIL FOR TEMPORARY SILT FENCE
USED WITH TEMPORARY STRAW BALE BARRIER

See Note 1

STATE OF CALIFORNIA
DEPARTMENT OF TRANSPORTATION

TEMPORARY WATER POLLUTION CONTROL DETAILS (TEMPORARY STRAW BALE BARRIER)

NO SCALE

T52

2026 STANDARD PLAN T52

7-1-26

Return to Table of Contents

Dist	COUNTY	ROUTE	POST MILES TOTAL PROJECT	SHEET No.	TOTAL SHEETS

REGISTERED CIVIL ENGINEER

September 18, 2026

PLANS APPROVAL DATE

REGISTERED PROFESSIONAL ENGINEER Sean T. Penders No. C63744 Exp. 9-30-26 CIVIL STATE OF CALIFORNIA

THE STATE OF CALIFORNIA OR ITS OFFICERS OR AGENTS SHALL NOT BE RESPONSIBLE FOR THE ACCURACY OR COMPLETENESS OF SCANNED COPIES OF THIS PLAN SHEET.

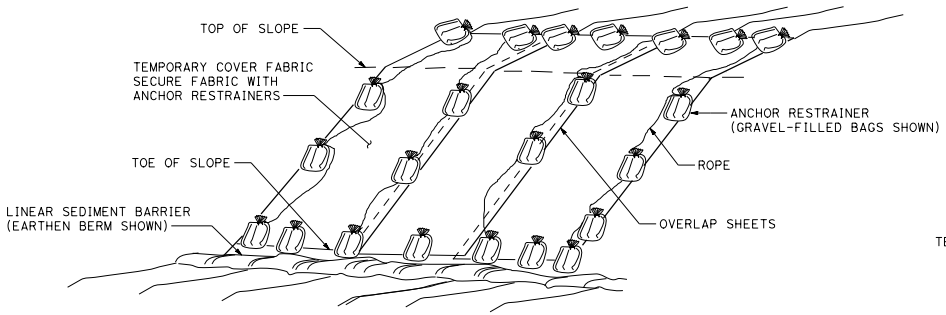

PERSPECTIVE

TEMPORARY COVER ON SLOPE

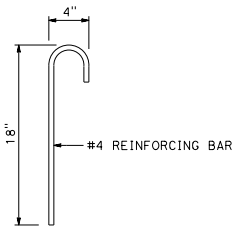

STEEL REINFORCING BAR DETAIL

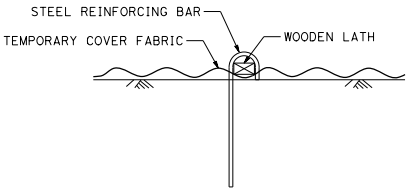

SECTION

ANCHOR RESTRAINER

Steel bar and wooden lath

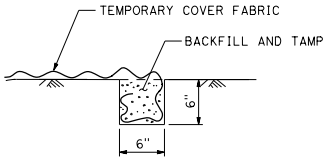

SECTION

KEY TRENCH DETAIL

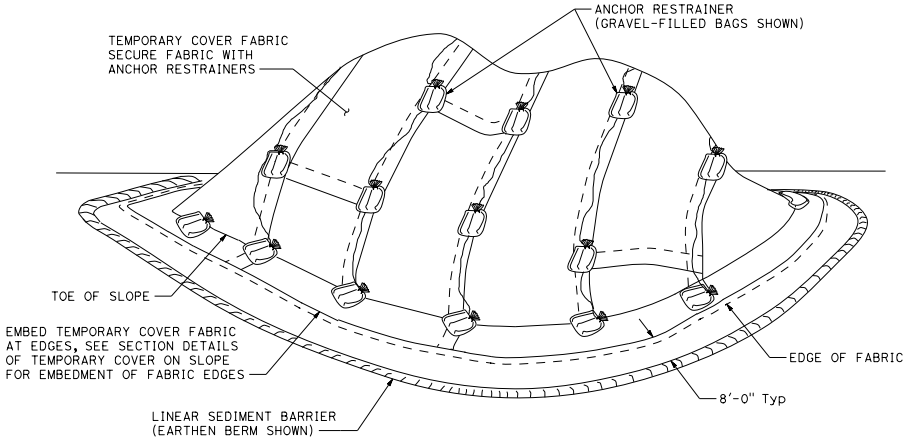

PERSPECTIVE

TEMPORARY COVER ON STOCKPILE

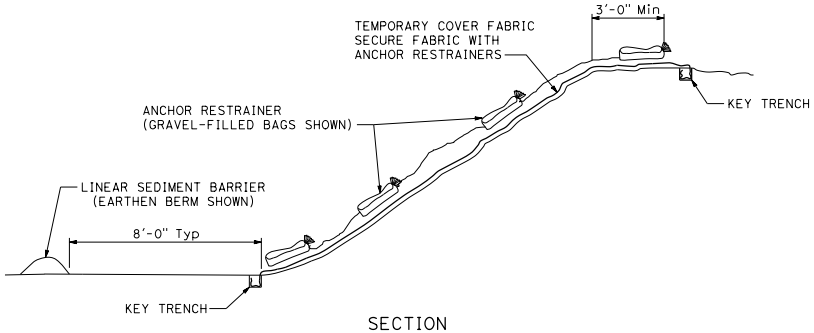

SECTION

TEMPORARY COVER ON SLOPE

STATE OF CALIFORNIA
DEPARTMENT OF TRANSPORTATION

TEMPORARY WATER POLLUTION CONTROL DETAILS (TEMPORARY COVER)

NO SCALE

T53

2026 STANDARD PLAN T53

7-1-26

Return to Table of Contents

Dist	COUNTY	ROUTE	POST MILES TOTAL PROJECT	SHEET No.	TOTAL SHEETS

REGISTERED CIVIL ENGINEER

September 18, 2026

PLANS APPROVAL DATE

REGISTERED PROFESSIONAL ENGINEER Sean T. Penders No. C63744 Exp. 9-30-26 CIVIL STATE OF CALIFORNIA

THE STATE OF CALIFORNIA OR ITS OFFICERS OR AGENTS SHALL NOT BE RESPONSIBLE FOR THE ACCURACY OR COMPLETENESS OF SCANNED COPIES OF THIS PLAN SHEET.

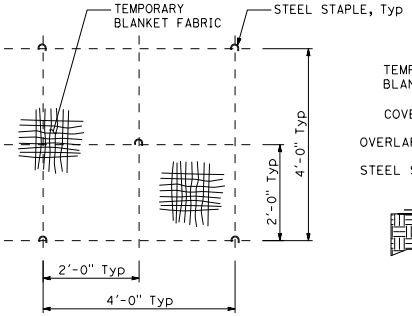

STAPLE PATTERN

DETAIL A

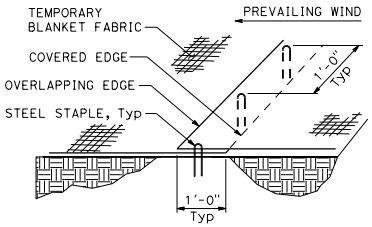

LONGITUDINAL BLANKET JOINT

DETAIL B

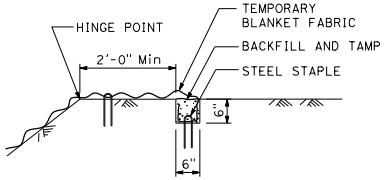

SECTION

KEY TRENCH AT TOP OF SLOPE

DETAIL C

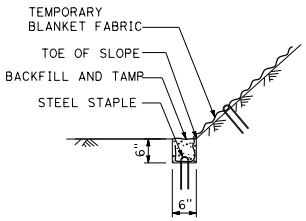

SECTION

KEY TRENCH AT TOE OF SLOPE

DETAIL D

NOTE:

1. Temporary fiber roll shown for reference purposes only.

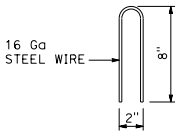

STAPLE DETAIL

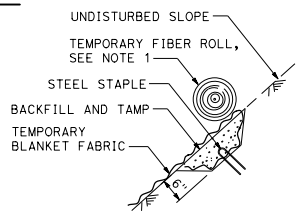

SECTION

KEY TRENCH AT UPPER CONFORM

DETAIL E

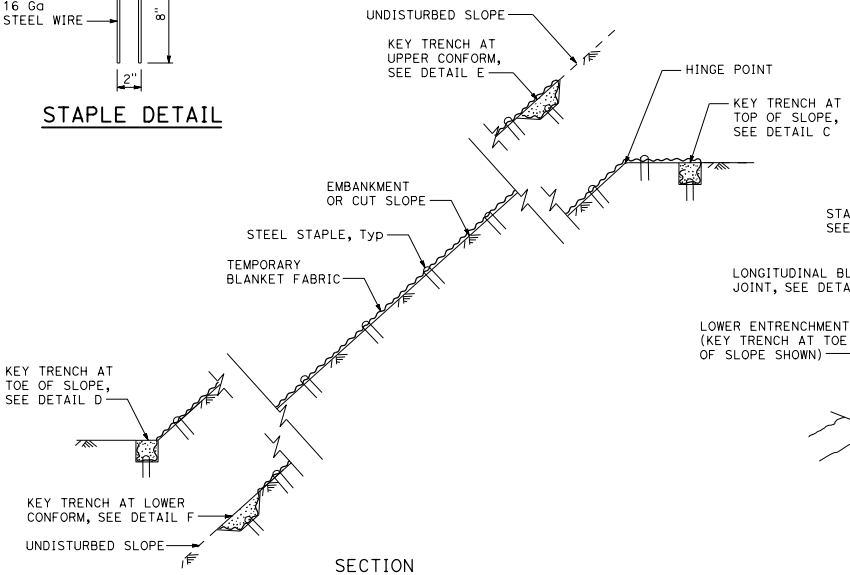

SECTION

TEMPORARY EROSION CONTROL BLANKET ON SLOPE WITH VARIOUS KEY ENTRENCHMENTS

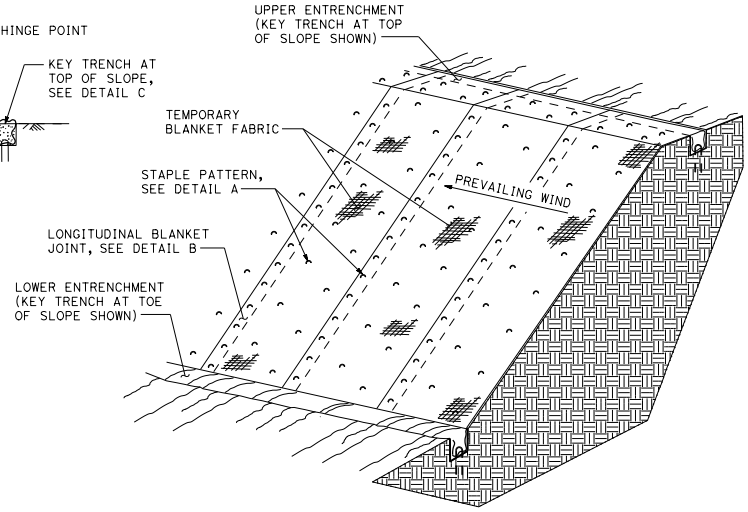

ISOMETRIC

TEMPORARY EROSION CONTROL BLANKET ON SLOPE

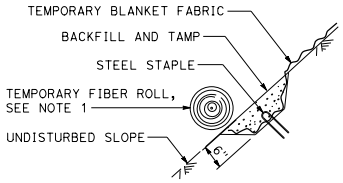

SECTION

KEY TRENCH AT LOWER CONFORM

DETAIL F

STATE OF CALIFORNIA
DEPARTMENT OF TRANSPORTATION

TEMPORARY WATER POLLUTION CONTROL DETAILS (TEMPORARY EROSION CONTROL BLANKET)

NO SCALE

T54

2026 STANDARD PLAN T54

7-1-26

Return to Table of Contents

Dist	COUNTY	ROUTE	POST MILES TOTAL PROJECT	SHEET No.	TOTAL SHEETS

REGISTERED CIVIL ENGINEER

September 18, 2026

PLANS APPROVAL DATE

REGISTERED PROFESSIONAL ENGINEER Sean T. Penders No. C63744 Exp. 9-30-26 CIVIL STATE OF CALIFORNIA

THE STATE OF CALIFORNIA OR ITS OFFICERS OR AGENTS SHALL NOT BE RESPONSIBLE FOR THE ACCURACY OR COMPLETENESS OF SCANNED COPIES OF THIS PLAN SHEET.

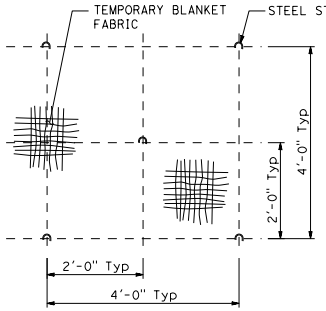

PLAN

STAPLE PATTERN

DETAIL A

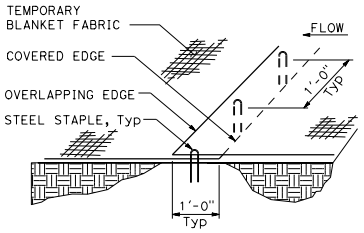

PERSPECTIVE

LONGITUDINAL BLANKET JOINT

DETAIL B

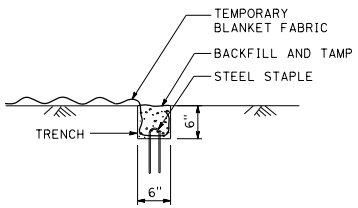

SECTION

KEY TRENCH

DETAIL C

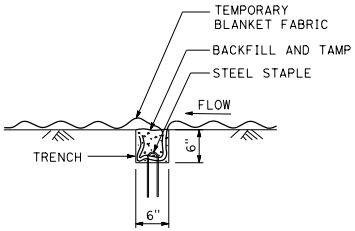

SECTION

TRANSVERSE BLANKET JOINT

DETAIL D

NOTE:

1. For clarity, perspective view does not show all staples.

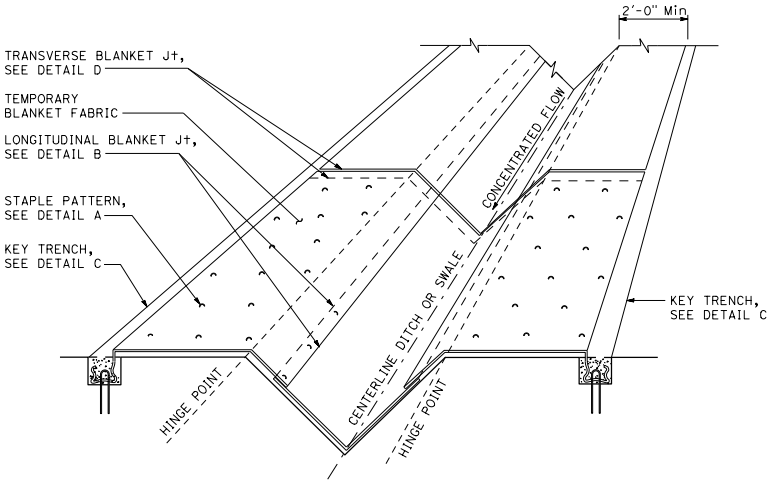

PERSPECTIVE

TEMPORARY EROSION CONTROL BLANKET

IN V-DITCH OR SWALE

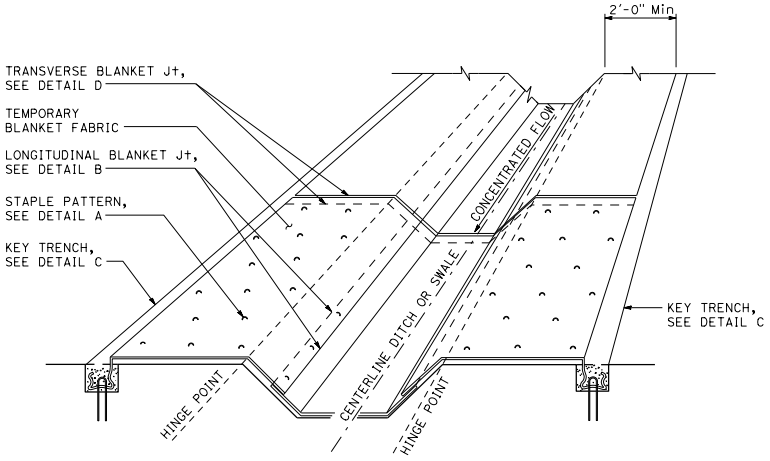

PERSPECTIVE

TEMPORARY EROSION CONTROL BLANKET

IN TRAPEZOIDAL DITCH OR SWALE

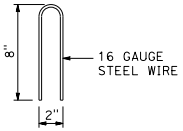

STAPLE DETAIL

STATE OF CALIFORNIA
DEPARTMENT OF TRANSPORTATION

TEMPORARY WATER POLLUTION CONTROL DETAILS (TEMPORARY EROSION CONTROL BLANKET)

NO SCALE

T55

2026 STANDARD PLAN T55

7-1-26

Return to Table of Contents

Dist	COUNTY	ROUTE	POST MILES TOTAL PROJECT	SHEET No.	TOTAL SHEETS

REGISTERED CIVIL ENGINEER

September 18, 2026

PLANS APPROVAL DATE

REGISTERED PROFESSIONAL ENGINEER Sean T. Penders No. C63744 Exp. 9-30-26 CIVIL STATE OF CALIFORNIA

THE STATE OF CALIFORNIA OR ITS OFFICERS OR AGENTS SHALL NOT BE RESPONSIBLE FOR THE ACCURACY OR COMPLETENESS OF SCANNED COPIES OF THIS PLAN SHEET.

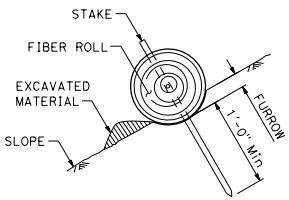

SECTION

TEMPORARY FIBER ROLL (TYPE 1)

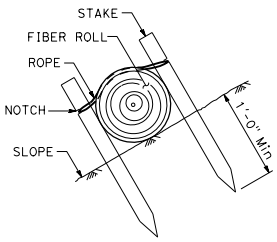

SECTION

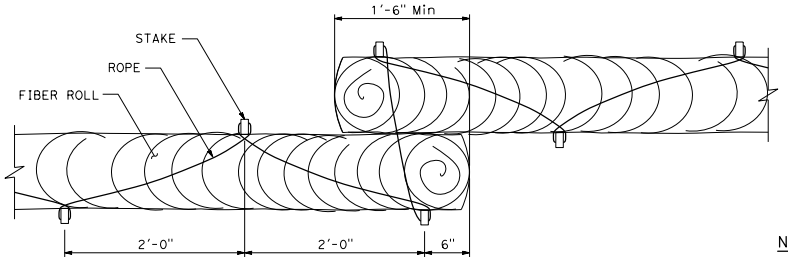

PLAN

TEMPORARY FIBER ROLL (TYPE 2)

NOTES:

1. Temporary fiber roll spacing varies depending upon slope inclination.
2. Installations shown in the perspectives are for slope inclination of 10:1 and steeper.

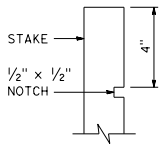

ELEVATION

STAKE NOTCH DETAIL

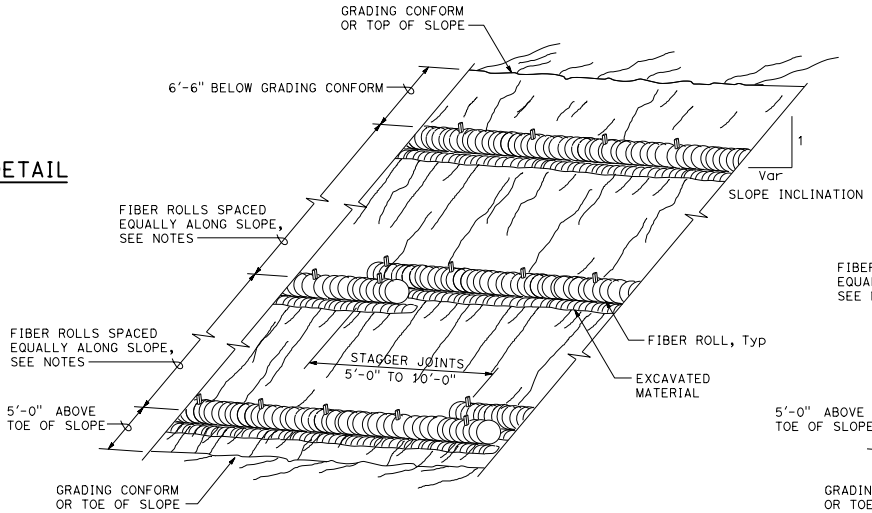

PERSPECTIVE

TEMPORARY FIBER ROLL (TYPE 1)

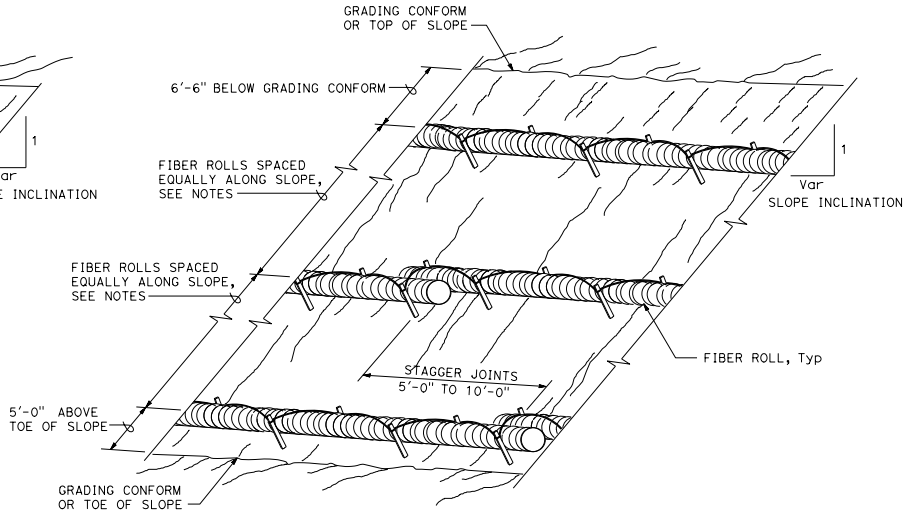

PERSPECTIVE

TEMPORARY FIBER ROLL (TYPE 2)

STATE OF CALIFORNIA
DEPARTMENT OF TRANSPORTATION

TEMPORARY WATER POLLUTION CONTROL DETAILS (TEMPORARY FIBER ROLL)

NO SCALE

T56

2026 STANDARD PLAN T56

7-1-26

Return to Table of Contents

Dist	COUNTY	ROUTE	POST MILES TOTAL PROJECT	SHEET No.	TOTAL SHEETS

REGISTERED CIVIL ENGINEER

September 18, 2026
PLANS APPROVAL DATE

REGISTERED PROFESSIONAL ENGINEER Sean T. Penders No. C63744 Exp. 9-30-26 CIVIL STATE OF CALIFORNIA

THE STATE OF CALIFORNIA OR ITS OFFICERS OR AGENTS SHALL NOT BE RESPONSIBLE FOR THE ACCURACY OR COMPLETENESS OF SCANNED COPIES OF THIS PLAN SHEET.

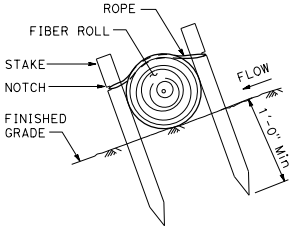

SECTION

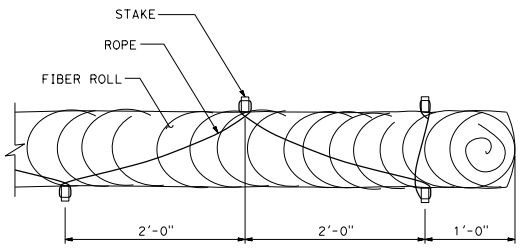

PLAN

STAKING AND LASHING DETAIL

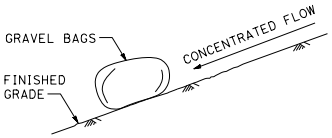

SECTION

TEMPORARY CHECK DAM (TYPE 2)

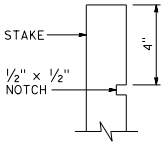

ELEVATION

STAKE NOTCH DETAIL

NOTE:

1. Spillway depth "d" shall be maintained to prevent flanking of concentrated flow around the ends of each check dam.

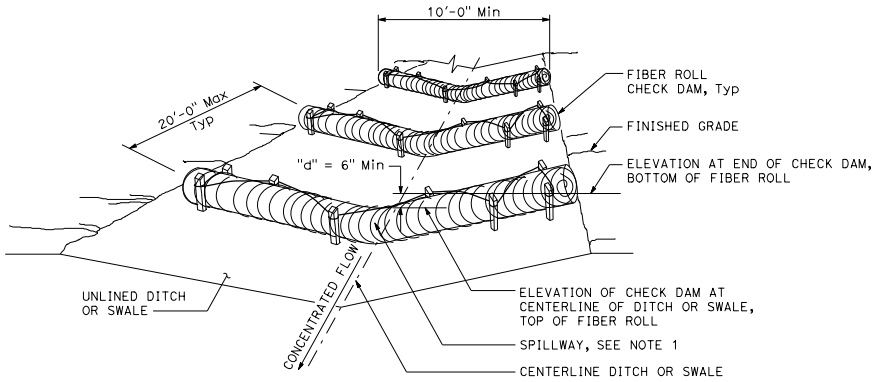

PERSPECTIVE

TEMPORARY CHECK DAM (TYPE 1)

Total of 3 check dams shown

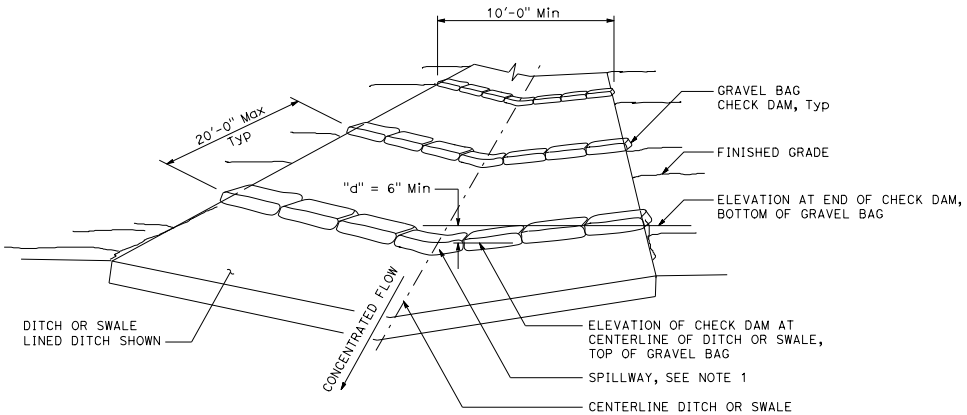

PERSPECTIVE

TEMPORARY CHECK DAM (TYPE 2)

Total of 3 check dams shown

STATE OF CALIFORNIA
DEPARTMENT OF TRANSPORTATION

TEMPORARY WATER POLLUTION CONTROL DETAILS (TEMPORARY CHECK DAM)

NO SCALE

T57

7-1-26

2026 STANDARD PLAN T57

Return to Table of Contents

Dist	COUNTY	ROUTE	POST MILES TOTAL PROJECT	SHEET No.	TOTAL SHEETS

REGISTERED CIVIL ENGINEER

September 18, 2026

PLANS APPROVAL DATE

REGISTERED PROFESSIONAL ENGINEER Sean T. Penders No. C63744 Exp. 9-30-26 CIVIL STATE OF CALIFORNIA

THE STATE OF CALIFORNIA OR ITS OFFICERS OR AGENTS SHALL NOT BE RESPONSIBLE FOR THE ACCURACY OR COMPLETENESS OF SCANNED COPIES OF THIS PLAN SHEET.

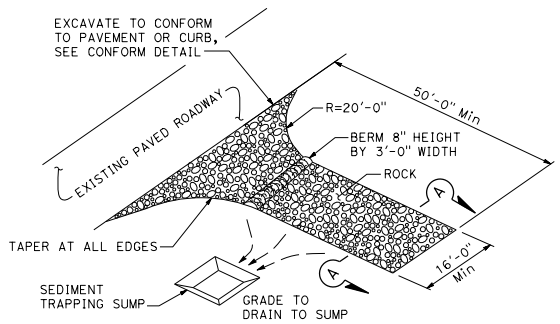

PERSPECTIVE

TEMPORARY CONSTRUCTION ENTRANCE (TYPE 1)

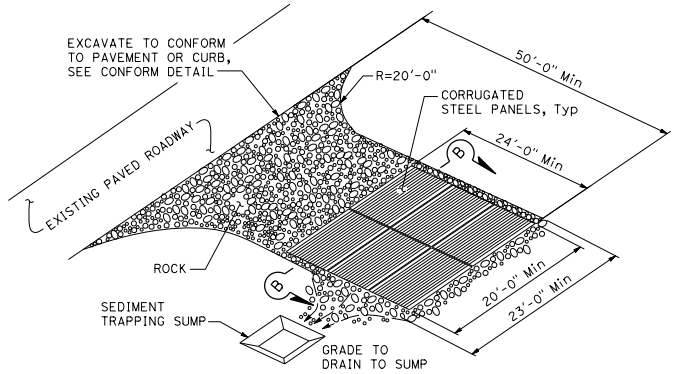

PERSPECTIVE

TEMPORARY CONSTRUCTION ENTRANCE (TYPE 2)

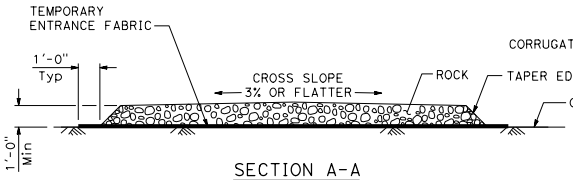

SECTION A-A

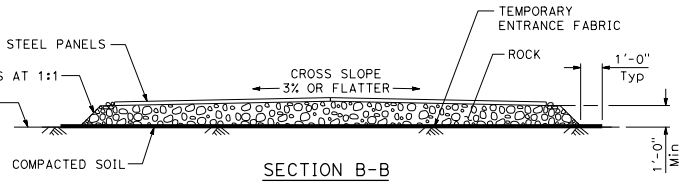

SECTION B-B

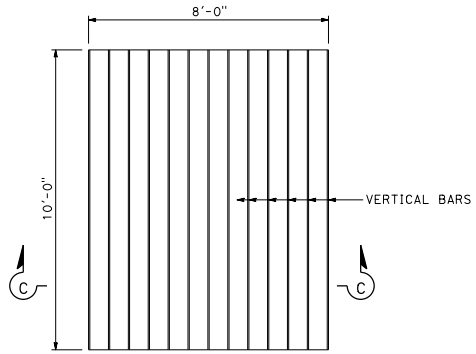

PLAN

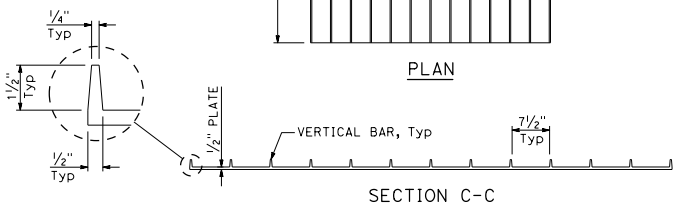

SECTION C-C

CORRUGATED STEEL PANEL DETAIL

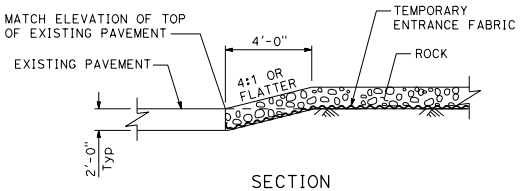

SECTION

CONFORM DETAIL

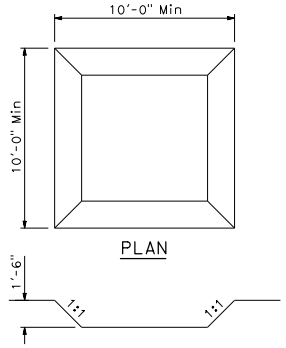

PLAN

ELEVATION

SEDIMENT TRAPPING SUMP

STATE OF CALIFORNIA
DEPARTMENT OF TRANSPORTATION

TEMPORARY WATER POLLUTION CONTROL DETAILS (TEMPORARY CONSTRUCTION ENTRANCE)

NO SCALE

T58

2026 STANDARD PLAN T58

7-1-26

Return to Table of Contents

Dist	COUNTY	ROUTE	POST MILES TOTAL PROJECT	SHEET No.	TOTAL SHEETS

REGISTERED CIVIL ENGINEER

September 18, 2026
PLANS APPROVAL DATE

REGISTERED PROFESSIONAL ENGINEER Sean T. Penders No. C63744 Exp. 9-30-26 CIVIL STATE OF CALIFORNIA

THE STATE OF CALIFORNIA OR ITS OFFICERS OR AGENTS SHALL NOT BE RESPONSIBLE FOR THE ACCURACY OR COMPLETENESS OF SCANNED COPIES OF THIS PLAN SHEET.

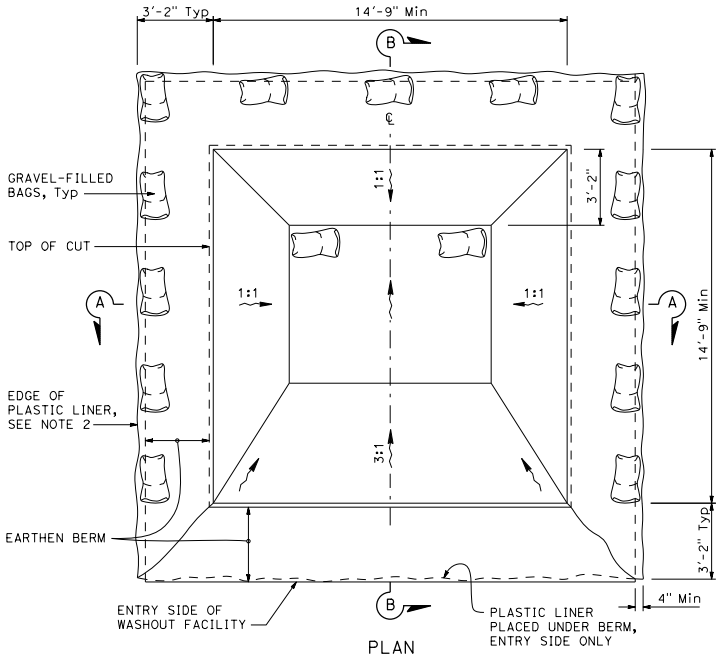

PLAN

TEMPORARY CONCRETE WASHOUT FACILITY

Below Grade

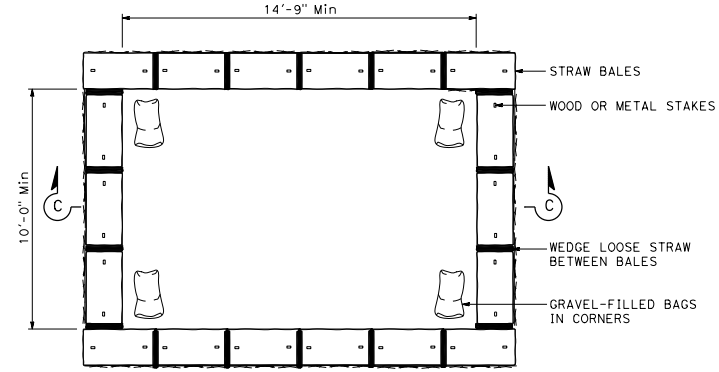

PLAN

TEMPORARY CONCRETE WASHOUT FACILITY

On Grade

NOTES:

1. The concrete washout sign shall be installed within 32'-10" of the temporary concrete washout facility.
2. Plastic liner shall be anchored with gravel-filled bags for below grade concrete washout facility.

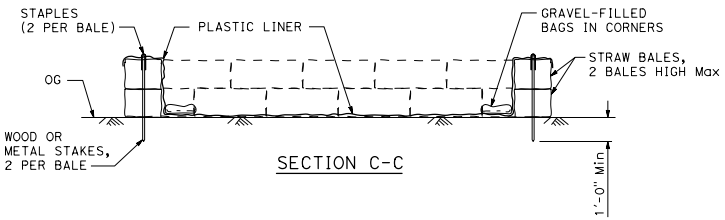

SECTION C-C

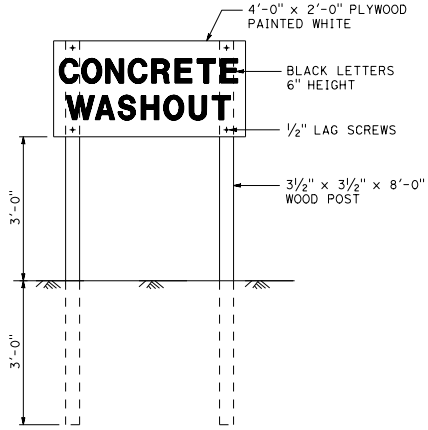

CONCRETE WASHOUT SIGN DETAIL

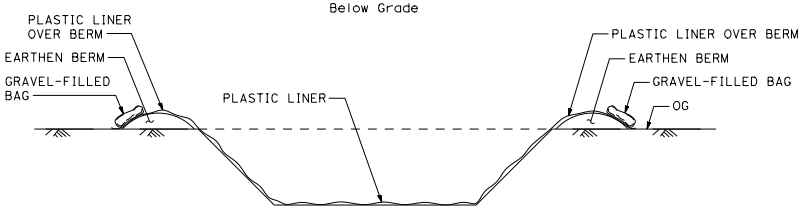

SECTION A-A

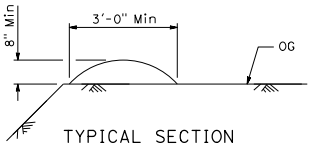

TYPICAL SECTION

EARTHEN BERM

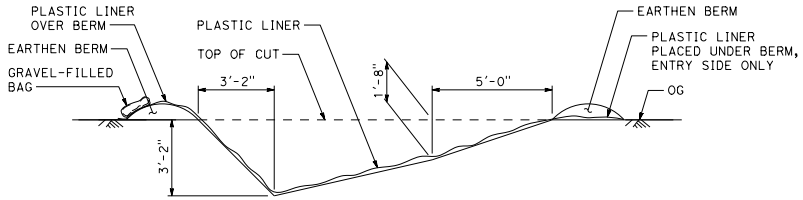

SECTION B-B

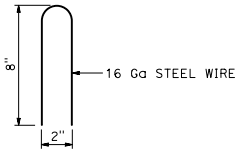

STAPLE DETAIL

STATE OF CALIFORNIA
DEPARTMENT OF TRANSPORTATION

TEMPORARY WATER POLLUTION CONTROL DETAILS (TEMPORARY CONCRETE WASHOUT FACILITY)

NO SCALE

T59

2026 STANDARD PLAN T59

7-1-26

Return to Table of Contents

Dist	COUNTY	ROUTE	POST MILES TOTAL PROJECT	SHEET No.	TOTAL SHEETS

REGISTERED CIVIL ENGINEER

September 18, 2026
PLANS APPROVAL DATE

REGISTERED PROFESSIONAL ENGINEER Sean T. Penders No. C63744 Exp. 9-30-26 CIVIL STATE OF CALIFORNIA

THE STATE OF CALIFORNIA OR ITS OFFICERS OR AGENTS SHALL NOT BE RESPONSIBLE FOR THE ACCURACY OR COMPLETENESS OF SCANNED COPIES OF THIS PLAN SHEET.

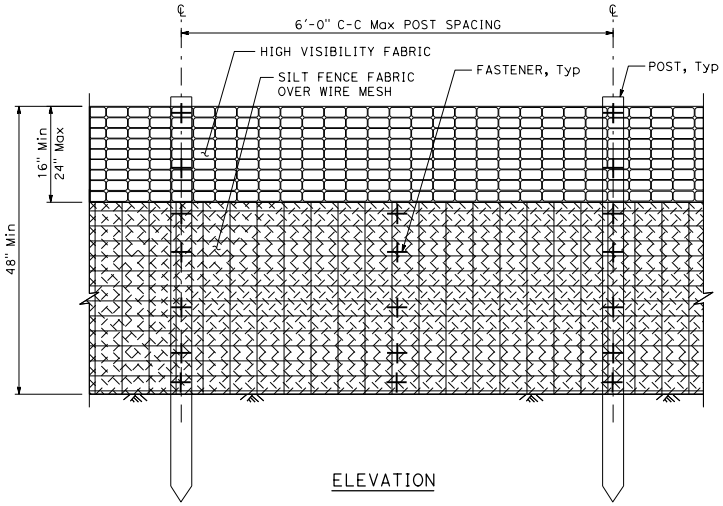

ELEVATION

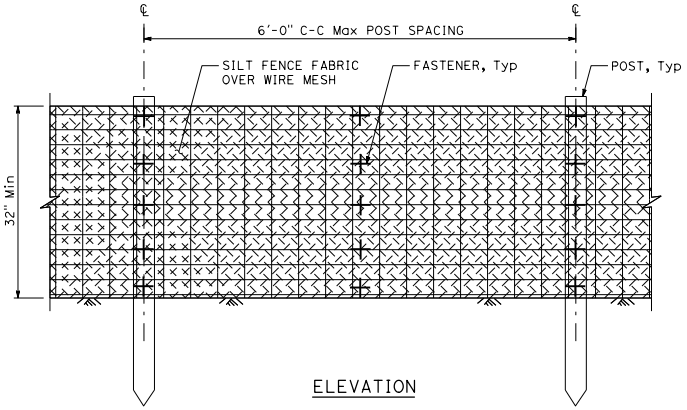

ELEVATION

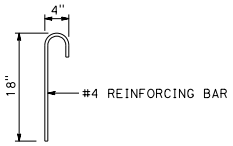

ANCHOR

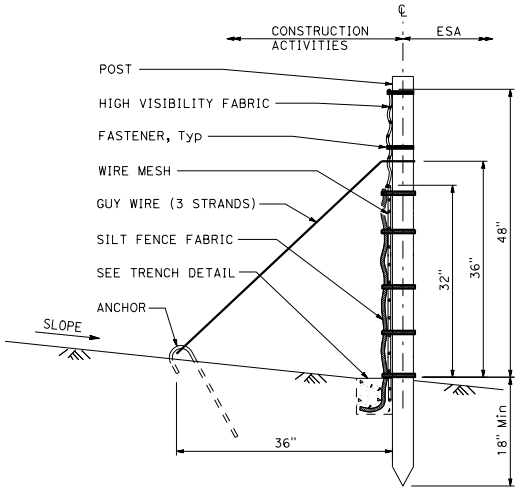

SECTION

TEMPORARY REINFORCED SILT FENCE (TYPE 1)

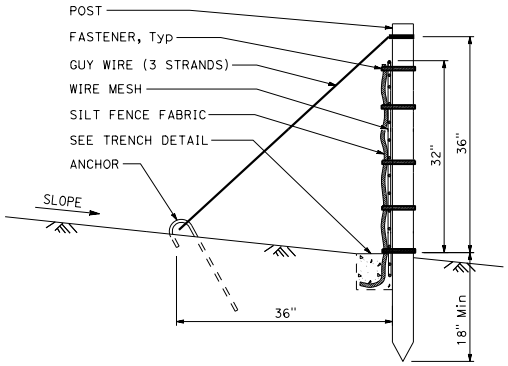

SECTION

TEMPORARY REINFORCED SILT FENCE (TYPE 2)

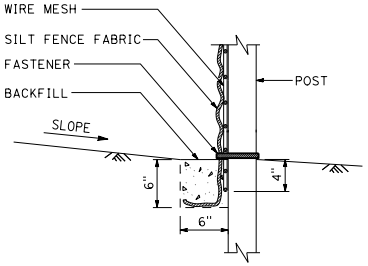

SECTION

TRENCH DETAIL

STATE OF CALIFORNIA
DEPARTMENT OF TRANSPORTATION

TEMPORARY WATER POLLUTION CONTROL DETAILS (TEMPORARY REINFORCED SILT FENCE)

NO SCALE

T60

2026 STANDARD PLAN T60

7-1-26

Return to Table of Contents

Dist	COUNTY	ROUTE	POST MILES TOTAL PROJECT	SHEET No.	TOTAL SHEETS

REGISTERED CIVIL ENGINEER

September 18, 2026

PLANS APPROVAL DATE

REGISTERED PROFESSIONAL ENGINEER Sean T. Penders No. C63744 Exp. 9-30-26 CIVIL STATE OF CALIFORNIA

THE STATE OF CALIFORNIA OR ITS OFFICERS OR AGENTS SHALL NOT BE RESPONSIBLE FOR THE ACCURACY OR COMPLETENESS OF SCANNED COPIES OF THIS PLAN SHEET.

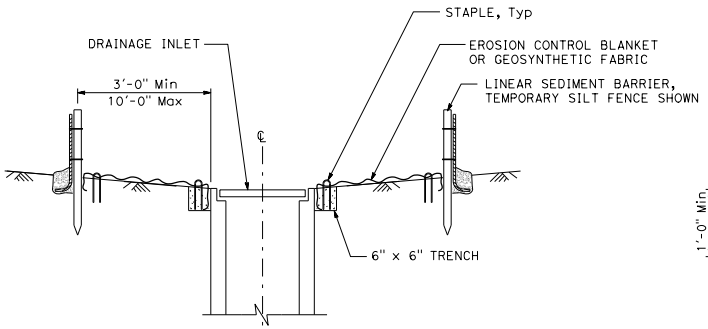

SECTION A-A

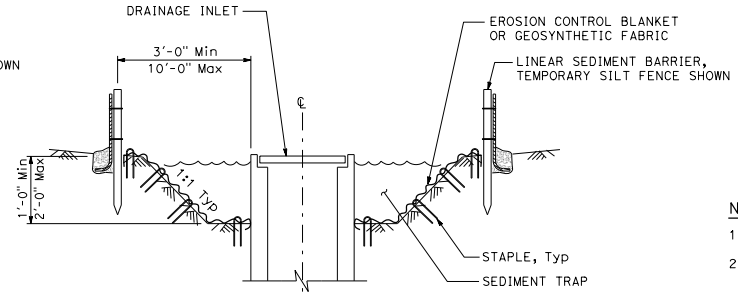

SECTION B-B

NOTES:

1. See Standard Plan T51 for Temporary Silt Fence.
2. Dimensions may vary to fit field conditions.

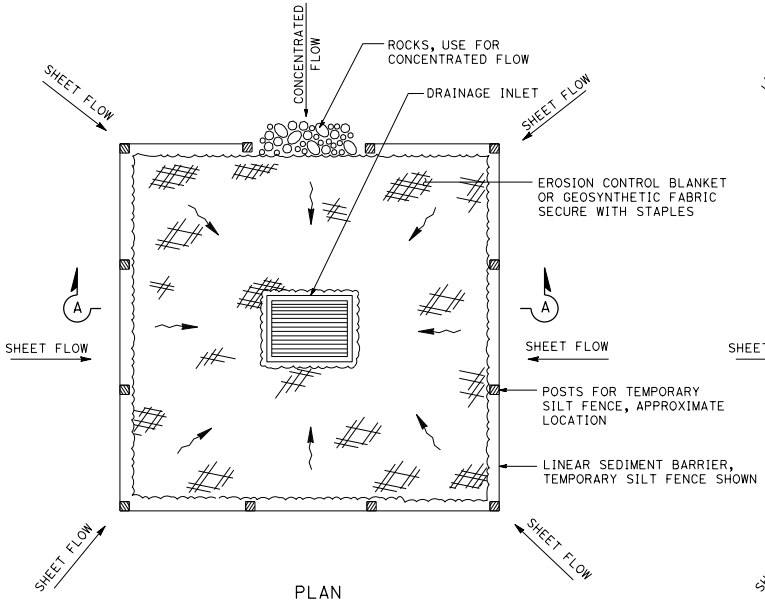

PLAN

TEMPORARY DRAINAGE INLET PROTECTION
(TYPE 1)

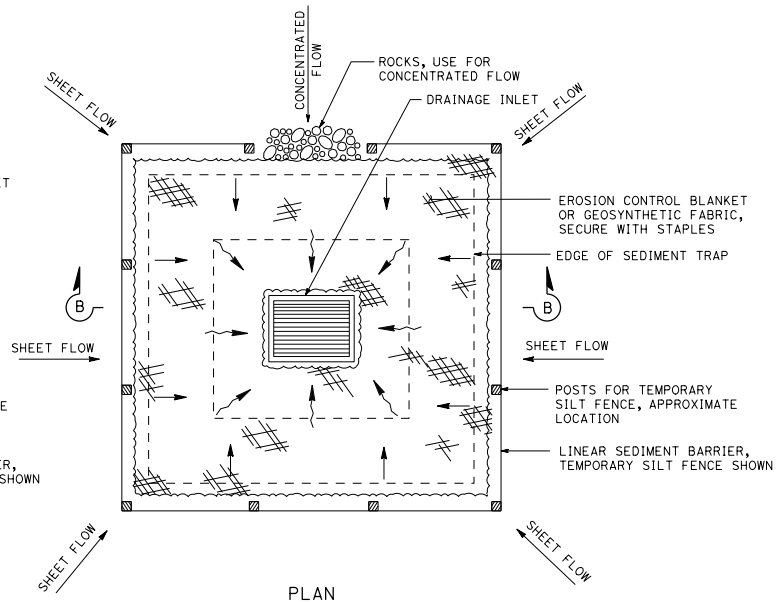

PLAN

TEMPORARY DRAINAGE INLET PROTECTION
(TYPE 2)
(EXCAVATED SEDIMENT TRAP)

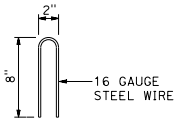

STAPLE DETAIL

STATE OF CALIFORNIA
DEPARTMENT OF TRANSPORTATION

TEMPORARY WATER POLLUTION CONTROL DETAILS (TEMPORARY DRAINAGE INLET PROTECTION)

NO SCALE

T61

2026 STANDARD PLAN T61

7-1-26

Return to Table of Contents

Dist	COUNTY	ROUTE	POST MILES TOTAL PROJECT	SHEET No.	TOTAL SHEETS

REGISTERED CIVIL ENGINEER

September 18, 2026

PLANS APPROVAL DATE

REGISTERED PROFESSIONAL ENGINEER Sean T. Penders No. C63744 Exp. 9-30-26 CIVIL STATE OF CALIFORNIA

THE STATE OF CALIFORNIA OR ITS OFFICERS OR AGENTS SHALL NOT BE RESPONSIBLE FOR THE ACCURACY OR COMPLETENESS OF SCANNED COPIES OF THIS PLAN SHEET.

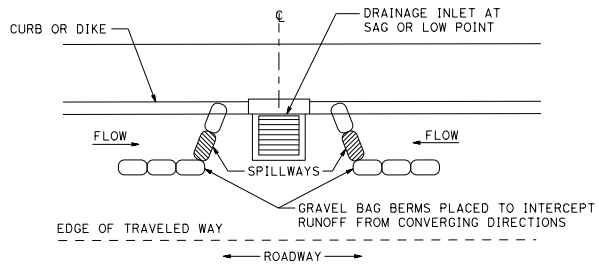

PLAN

CONFIGURATION FOR SAG POINT INLET (GRAVEL BAG BERM)

GRAVEL BAG BERM (TYPE 3A) SPACING TABLE

SLOPE OF ROADWAY (PERCENT)	1 TO 3.9	4 TO 5.9	6 TO 7.9	8 TO 10	10+
INTERVAL BETWEEN BERM	100'-0"	75'-0"	50'-0"	25'-0"	12'-0"

For slope of less than 1%, install barriers only if erosion/sediment is prevalent

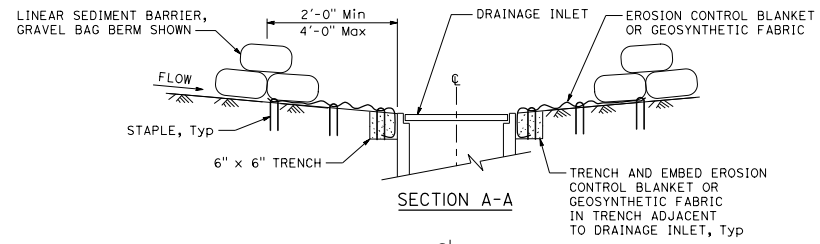

SECTION A-A

NOTES:

1. Place safety cones adjacent to drainage inlet protection.
2. Dimensions may vary to fit field conditions.
3. Install a minimum of 3 gravel bag berms upstream of each drainage inlet to be protected.
4. Position erosion control blanket or geosynthetic fabric at edge of concrete apron and secure in trench.
5. Erosion control blanket or geosynthetic fabric is not required if the area adjacent to the drainage inlet is vegetated or paved.

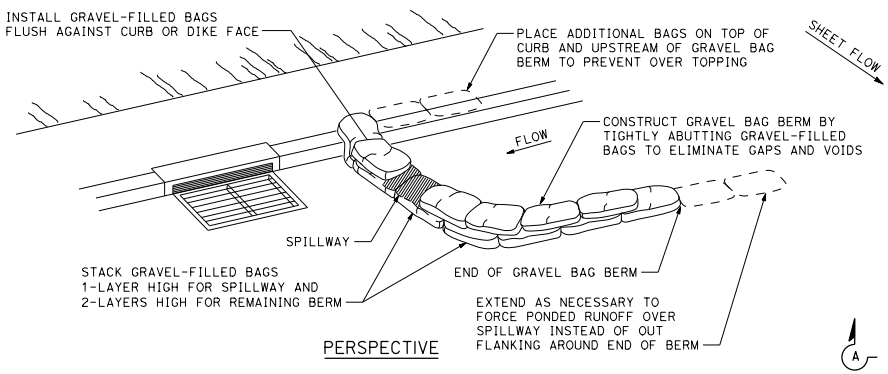

PERSPECTIVE

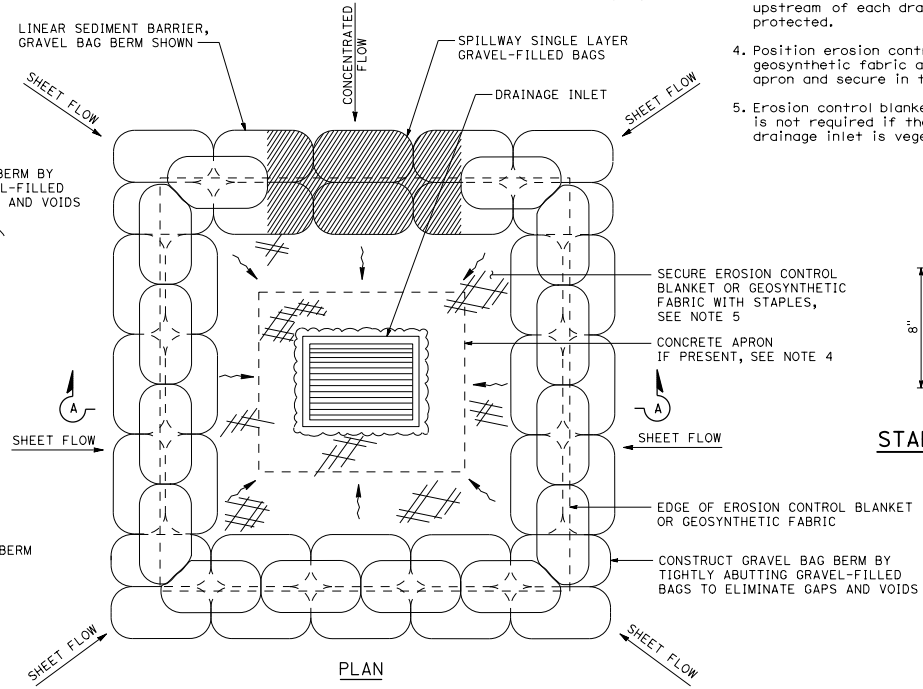

PLAN

TEMPORARY DRAINAGE INLET PROTECTION (TYPE 3B)

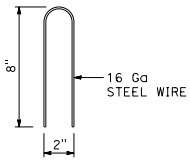

STAPLE DETAIL

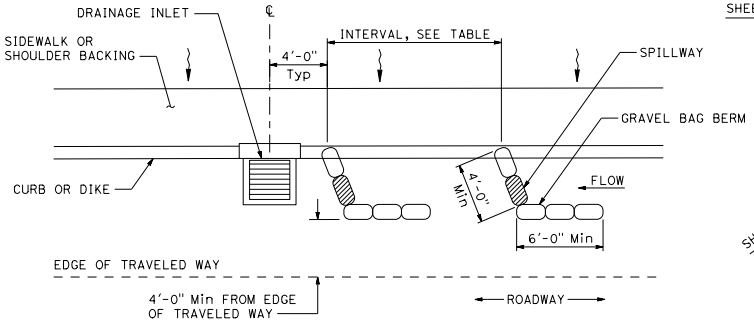

PLAN

TEMPORARY DRAINAGE INLET PROTECTION (TYPE 3A) (GRAVEL BAG BERM)

STATE OF CALIFORNIA
DEPARTMENT OF TRANSPORTATION

TEMPORARY WATER POLLUTION CONTROL DETAILS (TEMPORARY DRAINAGE INLET PROTECTION)

NO SCALE

T62

2026 STANDARD PLAN T62

7-1-26

Return to Table of Contents

FLEXIBLE SEDIMENT BARRIER SPACING TABLE					
SLOPE OF ROADWAY (PERCENT)	0 TO 0.9	1 TO 1.9	2 TO 2.9	3 TO 4	5+
INTERVAL BETWEEN BARRIERS	50'-0"	35'-0"	30'-0"	25'-0"	20'-0"
ANGLE FROM FACE OF CURB	70°	70°	70°	45°	45°
SUGGESTED BARRIER LENGTH	6'-0"	6'-0"	6'-0"	6'-0"	6'-0"

Dist	COUNTY	ROUTE	POST MILES TOTAL PROJECT	SHEET No.	TOTAL SHEETS

REGISTERED CIVIL ENGINEER

September 18, 2026
PLANS APPROVAL DATE

REGISTERED PROFESSIONAL ENGINEER Sean T. Penders No. C63744 Exp. 9-30-26 CIVIL STATE OF CALIFORNIA

THE STATE OF CALIFORNIA OR ITS OFFICERS OR AGENTS SHALL NOT BE RESPONSIBLE FOR THE ACCURACY OR COMPLETENESS OF SCANNED COPIES OF THIS PLAN SHEET.

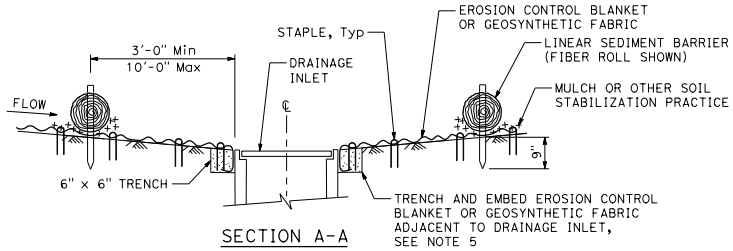

SECTION A-A

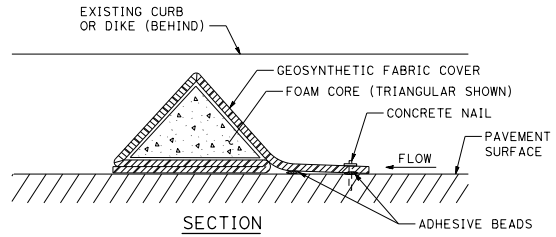

SECTION

FLEXIBLE SEDIMENT BARRIER DETAIL

(Foam barrier shown)

NOTES:

1. See Standard Plan T51 for temporary silt fence.
2. Dimensions may vary to fit field conditions.
3. Install a minimum of 3 flexible sediment barriers upstream of each drainage inlet to be protected.
4. Position erosion control blanket or geosynthetic fabric at edge of concrete apron and secure in trench.
5. Erosion control blanket or geosynthetic fabric is not required if the area adjacent to the drainage inlet is vegetated.

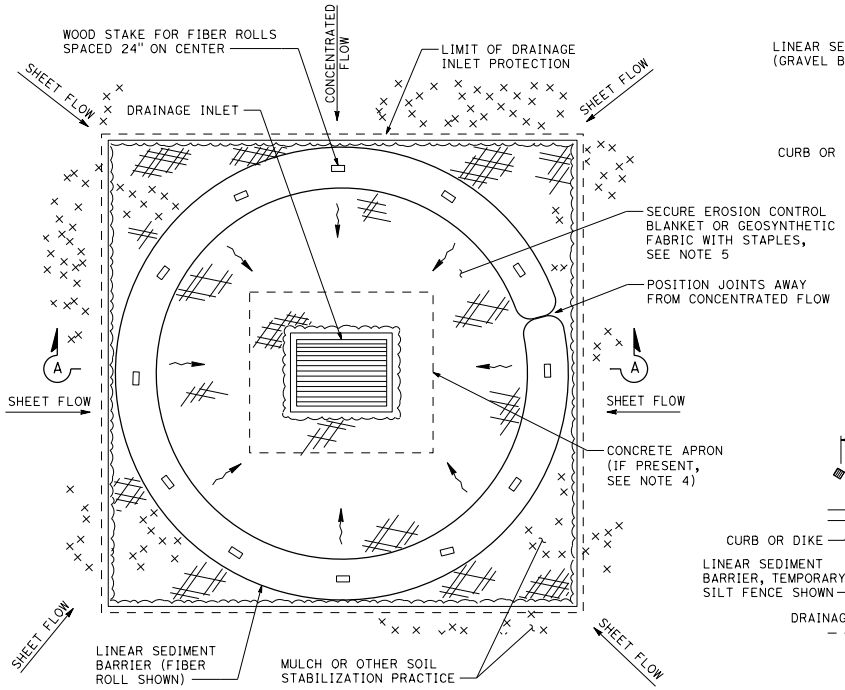

PLAN

TEMPORARY DRAINAGE INLET PROTECTION (TYPE 4A)

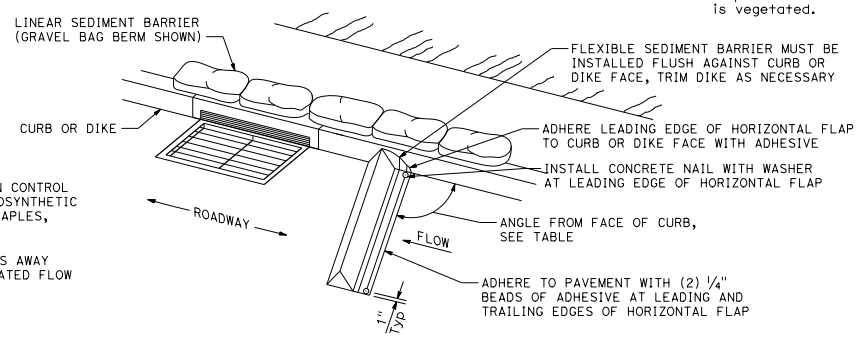

PERSPECTIVE

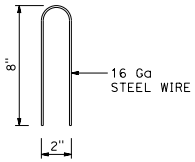

STAPLE DETAIL

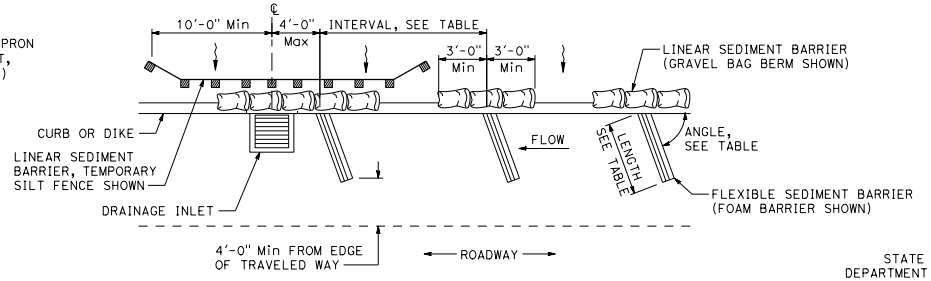

PLAN

TEMPORARY DRAINAGE INLET PROTECTION (TYPE 4B)
FLEXIBLE SEDIMENT BARRIER

STATE OF CALIFORNIA
DEPARTMENT OF TRANSPORTATION

TEMPORARY WATER POLLUTION CONTROL DETAILS (TEMPORARY DRAINAGE INLET PROTECTION)

NO SCALE

T63

2026 STANDARD PLAN T63

7-1-26

Return to Table of Contents

Dist	COUNTY	ROUTE	POST MILES TOTAL PROJECT	SHEET No.	TOTAL SHEETS

REGISTERED CIVIL ENGINEER

September 18, 2026

PLANS APPROVAL DATE

REGISTERED PROFESSIONAL ENGINEER Sean T. Penders No. C63744 Exp. 9-30-26 CIVIL STATE OF CALIFORNIA

THE STATE OF CALIFORNIA OR ITS OFFICERS OR AGENTS SHALL NOT BE RESPONSIBLE FOR THE ACCURACY OR COMPLETENESS OF SCANNED COPIES OF THIS PLAN SHEET.

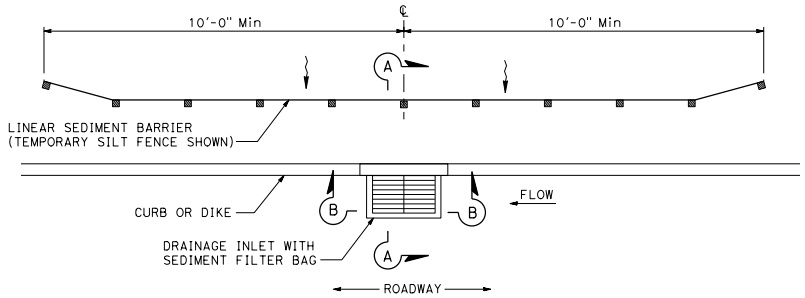

PLAN

TEMPORARY DRAINAGE INLET PROTECTION (TYPE 5) (SEDIMENT FILTER BAG)

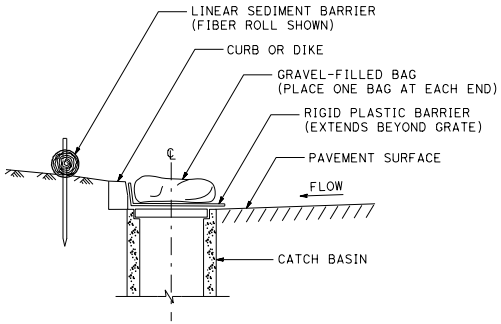

SECTION

TEMPORARY DRAINAGE INLET PROTECTION (TYPE 6A) (CATCH BASIN WITH GRATE)

NOTES:

1. See Standard Plan T51 for temporary silt fence.
2. Dimensions may vary to fit field conditions.

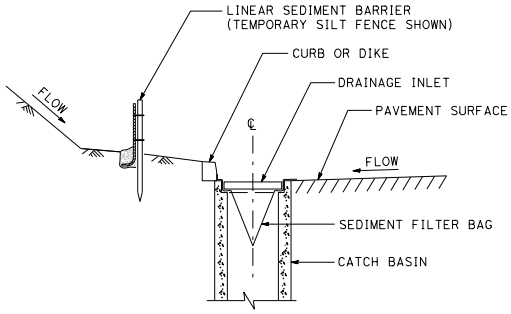

SECTION A-A

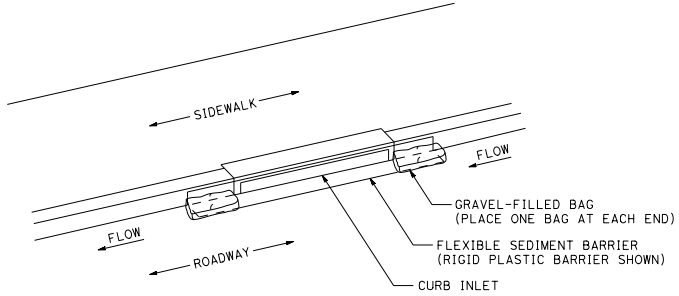

PERSPECTIVE

TEMPORARY DRAINAGE INLET PROTECTION (TYPE 6B) (CURB INLET WITHOUT GRATE)

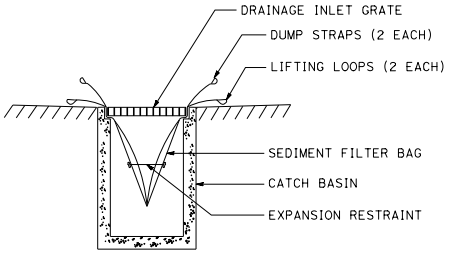

SECTION B-B

SEDIMENT FILTER BAG DETAIL

STATE OF CALIFORNIA
DEPARTMENT OF TRANSPORTATION

TEMPORARY WATER POLLUTION CONTROL DETAILS (TEMPORARY DRAINAGE INLET PROTECTION)

NO SCALE

T64

2026 STANDARD PLAN T64

7-1-26

Return to Table of Contents

Dist	COUNTY	ROUTE	POST MILES TOTAL PROJECT	SHEET No.	TOTAL SHEETS

REGISTERED CIVIL ENGINEER

September 18, 2026
PLANS APPROVAL DATE

REGISTERED PROFESSIONAL ENGINEER
Sean T. Penders
No. C63744
Exp. 9-30-26
CIVIL
STATE OF CALIFORNIA

THE STATE OF CALIFORNIA OR ITS OFFICERS OR AGENTS SHALL NOT BE RESPONSIBLE FOR THE ACCURACY OR COMPLETENESS OF SCANNED COPIES OF THIS PLAN SHEET.

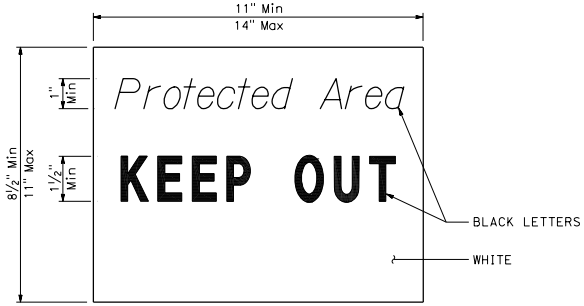

SIGN DETAIL

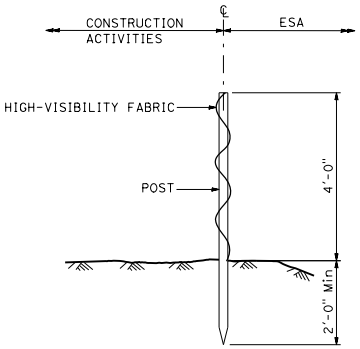

SECTION

TEMPORARY HIGH-VISIBILITY FENCE

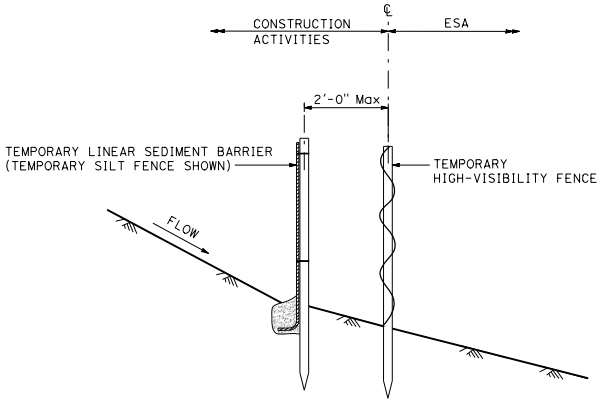

SECTION

PLACEMENT DETAIL FOR TEMPORARY LINEAR SEDIMENT BARRIER USED WITH TEMPORARY HIGH-VISIBILITY FENCE

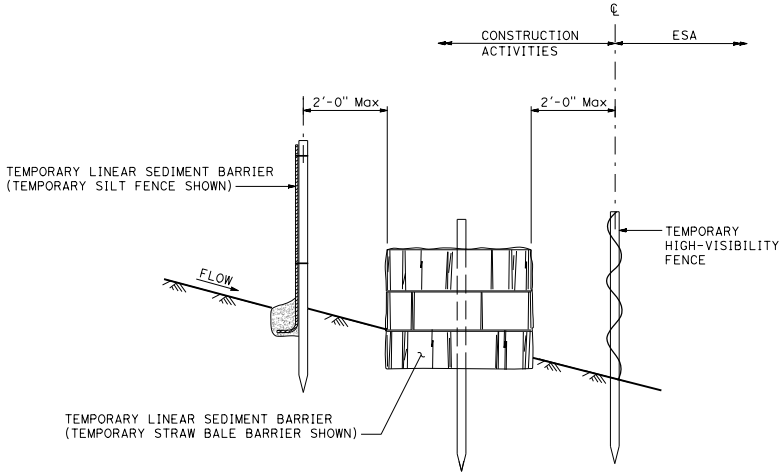

SECTION

PLACEMENT DETAIL FOR TEMPORARY SILT FENCE AND TEMPORARY STRAW BALE BARRIER USED WITH TEMPORARY HIGH-VISIBILITY FENCE

STATE OF CALIFORNIA
DEPARTMENT OF TRANSPORTATION

TEMPORARY WATER POLLUTION CONTROL DETAILS (TEMPORARY HIGH-VISIBILITY FENCE)

NO SCALE

T65

2026 STANDARD PLAN T65

7-1-26

Return to Table of Contents

Dist	COUNTY	ROUTE	POST MILES TOTAL PROJECT	SHEET No.	TOTAL SHEETS

REGISTERED CIVIL ENGINEER

September 18, 2026

PLANS APPROVAL DATE

REGISTERED PROFESSIONAL ENGINEER Sean T. Penders No. C63744 Exp. 9-30-26 CIVIL STATE OF CALIFORNIA

THE STATE OF CALIFORNIA OR ITS OFFICERS OR AGENTS SHALL NOT BE RESPONSIBLE FOR THE ACCURACY OR COMPLETENESS OF SCANNED COPIES OF THIS PLAN SHEET.

NOTES:

1. Temporary high-visibility fence shown for reference purposes only.
2. Setback dimension may vary according to field conditions or as designated on plans.

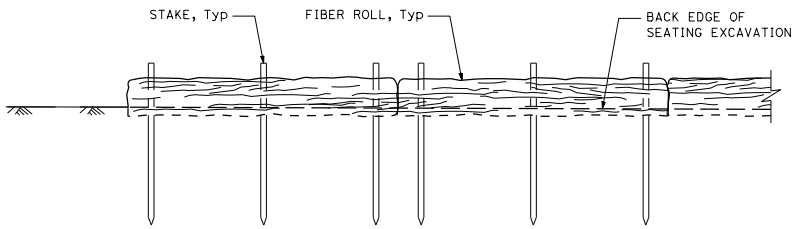

FRONT ELEVATION

TEMPORARY LARGE SEDIMENT BARRIER

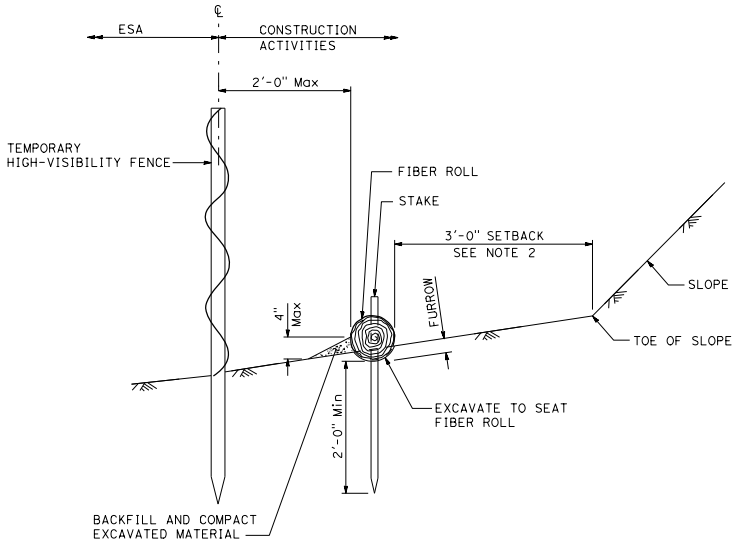

SECTION

PLACEMENT DETAIL FOR TEMPORARY HIGH-VISIBILITY FENCE USED WITH TEMPORARY LARGE SEDIMENT BARRIER

See Note 1

STATE OF CALIFORNIA
DEPARTMENT OF TRANSPORTATION

TEMPORARY WATER POLLUTION CONTROL DETAILS (TEMPORARY LARGE SEDIMENT BARRIER)

NO SCALE

T66

2026 STANDARD PLAN T66

7-1-26

Return to Table of Contents

Dist	COUNTY	ROUTE	POST MILES TOTAL PROJECT	SHEET No.	TOTAL SHEETS

REGISTERED CIVIL ENGINEER

September 18, 2026

PLANS APPROVAL DATE

REGISTERED PROFESSIONAL ENGINEER Sean T. Penders No. C63744 Exp. 9-30-26 CIVIL STATE OF CALIFORNIA

THE STATE OF CALIFORNIA OR ITS OFFICERS OR AGENTS SHALL NOT BE RESPONSIBLE FOR THE ACCURACY OR COMPLETENESS OF SCANNED COPIES OF THIS PLAN SHEET.

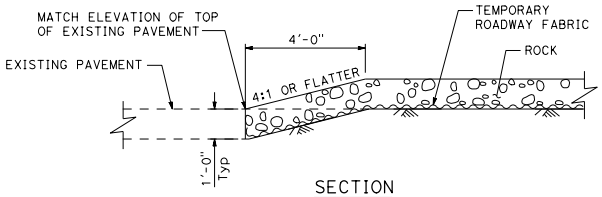

SECTION

CONFORM DETAIL

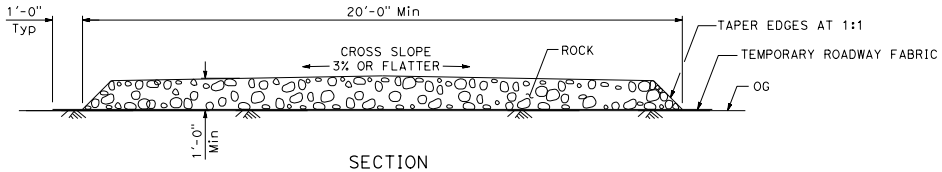

SECTION

TEMPORARY CONSTRUCTION ROADWAY

STATE OF CALIFORNIA
DEPARTMENT OF TRANSPORTATION

TEMPORARY WATER POLLUTION CONTROL DETAILS (TEMPORARY CONSTRUCTION ROADWAY)

NO SCALE

T67

2026 STANDARD PLAN T67

7-1-26

Return to Table of Contents

Dist	COUNTY	ROUTE	POST MILES TOTAL PROJECT	SHEET No.	TOTAL SHEETS

Peter W. Norboe
REGISTERED CIVIL ENGINEER
September 18, 2026
PLANS APPROVAL DATE

REGISTERED PROFESSIONAL ENGINEER Peter W. Norboe No. C57519 Exp. 12-31-27 CIVIL STATE OF CALIFORNIA

THE STATE OF CALIFORNIA OR ITS OFFICERS OR AGENTS SHALL NOT BE RESPONSIBLE FOR THE ACCURACY OR COMPLETENESS OF SCANNED COPIES OF THIS PLAN SHEET.

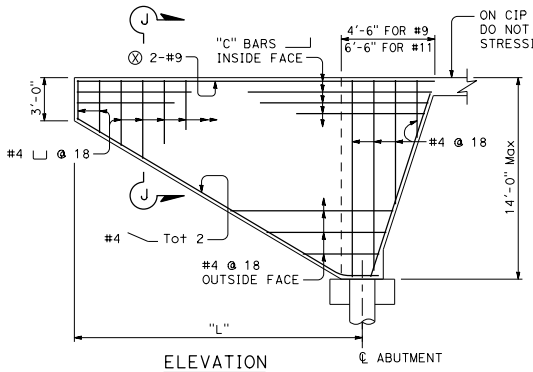

ELEVATION

SLOPING ABUTMENT

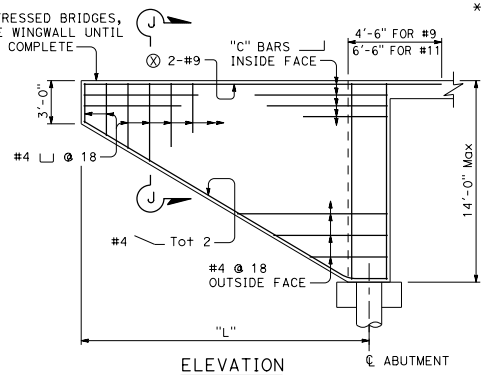

ELEVATION

VERTICAL ABUTMENT

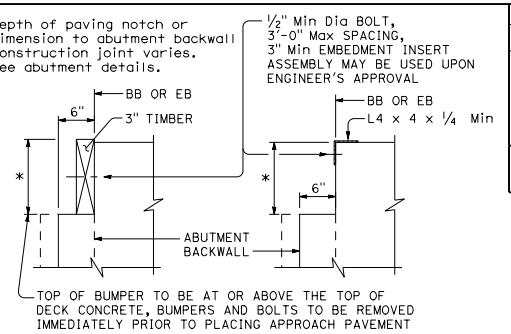

ALTERNATIVE 1 ALTERNATIVE 2

BRIDGE DETAIL 1-2

TEMPORARY BUMPERS

BRIDGE DESIGNATIONS AND ABBREVIATIONS

See Standard Plans A3A, A3B, and A3C for additional or standard abbreviations

J	Outer, outer left bridge
K	Outer left bridge
S	Outer right bridge
T	Outer, outer right bridge
RWLOL	Retaining Wall Layout Line
WWLOL	Wingwall Layout Line

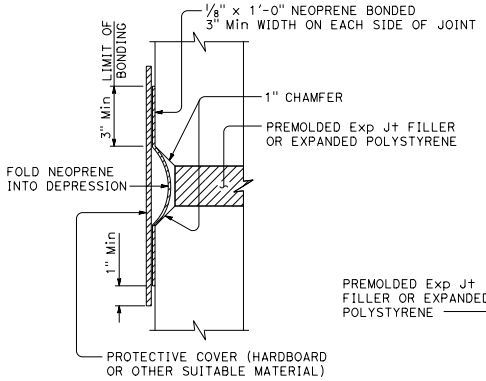

BRIDGE DETAIL 1-3

STRIP WATERSTOP DETAIL

When used on CIP prestressed bridges, do not apply waterstop until stressing is complete.

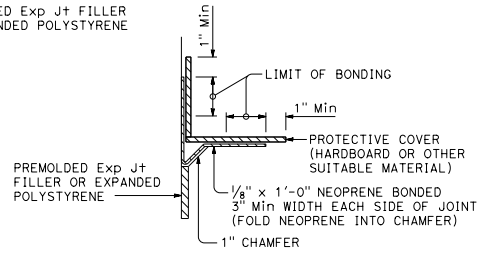

BRIDGE DETAIL 1-4

STRIP WATERSTOP CORNER DETAIL

When used on CIP prestressed bridges, do not apply waterstop until stressing is complete.

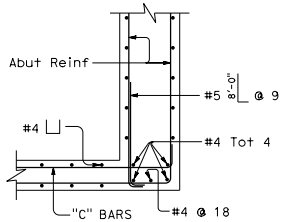

CORNER DETAIL FOR SKEW 20° AND LESS

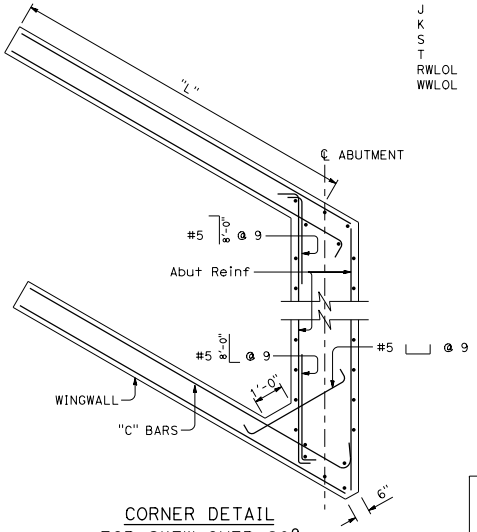

CORNER DETAIL FOR SKEW OVER 20°

BRIDGE DETAIL 1-5

WINGWALLS FOR DIAPHRAGM ABUTMENT

"L"	"C" BARS
12'-0"	#5 @ 9"
14'-0"	#6 @ 9"
16'-0"	#7 @ 9"
18'-0"	#8 @ 9"
20'-0"	#9 @ 9"

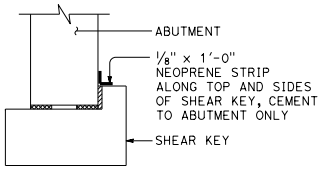

BRIDGE DETAIL 1-6

SHEAR KEY JOINT PROTECTION

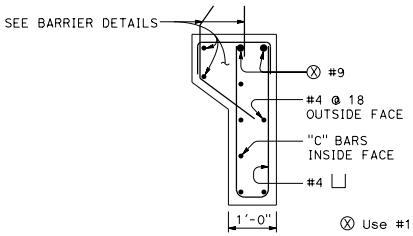

SECTION J-J
Without overhang

⊗ Use #11 bars if wingwall supports a sidewalk.

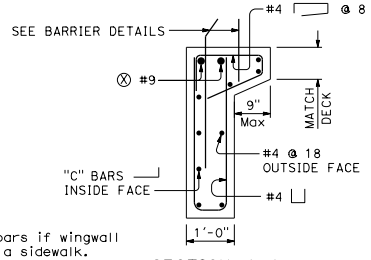

SECTION J-J
With overhang

STATE OF CALIFORNIA
DEPARTMENT OF TRANSPORTATION

BRIDGE DETAILS

NO SCALE

BO-1

7-1-26

Return to Table of Contents

Dist	COUNTY	ROUTE	POST MILES TOTAL PROJECT	SHEET No.	TOTAL SHEETS

REGISTERED CIVIL ENGINEER

September 18, 2026
PLANS APPROVAL DATE

REGISTERED PROFESSIONAL ENGINEER Gary Wang No. C58298 Exp. 6-30-28 CIVIL STATE OF CALIFORNIA

THE STATE OF CALIFORNIA OR ITS OFFICERS OR AGENTS SHALL NOT BE RESPONSIBLE FOR THE ACCURACY OR COMPLETENESS OF SCANNED COPIES OF THIS PLAN SHEET.

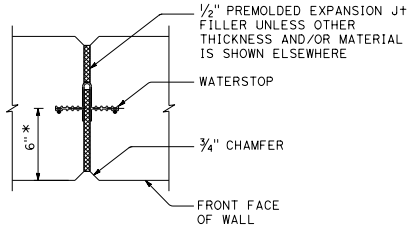

BRIDGE DETAIL 3-4

WALL EXPANSION JOINT

* For placement in bridge decks, see Joint Seal Details. for wall thickness less than 1'-0", use ½ the wall thickness.

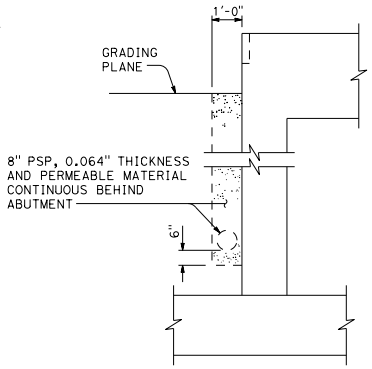

BRIDGE DETAIL 3-5

8" PSP AND PERMEABLE MATERIAL

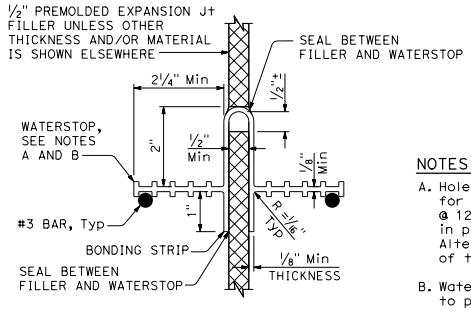

BRIDGE DETAIL 3-6

WATERSTOP

NOTES (WATERSTOP ONLY):

A. Holes will be permitted in the outer ½" of the web for wire, rings, etc. Tie web to #3 reinforcing bars @ 12 maximum intervals to support the waterstop in proper position during concrete placement. Alternative detail may be submitted for approval of the Engineer.

B. Waterstop to have 5 or more pairs of raised ribs to provide 0.1 square inch minimum rib cross-section area on each half of the waterstop.

NOTES:

1. 4" ø Drains at intermediate sag points and 25'-0" maximum center to center. For walls adjacent to sidewalks or curbs, provide 4" plastic pipe under the sidewalk to discharge thru curb face. Exposed wall drains shall be located 3"± above finished grade.
2. 6" square aluminum or galvanized steel wire ¼" mesh hardware cloth, minimum wire diameter 0.025". Anchor firmly to backface.
3. One cubic foot pervious backfill material in a nonwoven filter fabric, securely tied.
4. Pervious backfill material continuous behind retaining wall or abutment.
5. Geocomposite drain, treated permeable base and 3" ø slotted plastic pipe continuous behind retaining wall or abutment. Cap ends of pipe. Provide Tee Connection at each 4" ø drain.
6. Connect the low end of plastic pipe to the main outlet pipe as applicable.

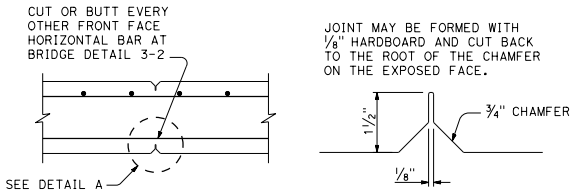

SECTION DETAIL A

BRIDGE DETAIL 3-2

WEAKENED PLANES

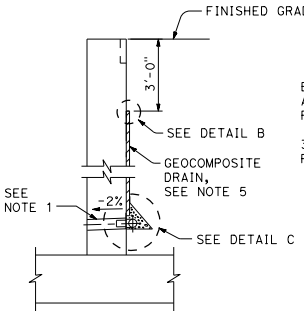

WALL SECTION

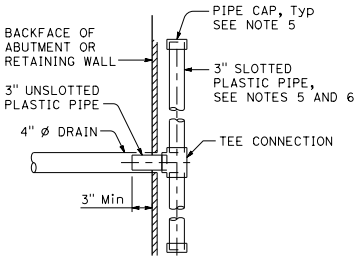

SECTION A-A

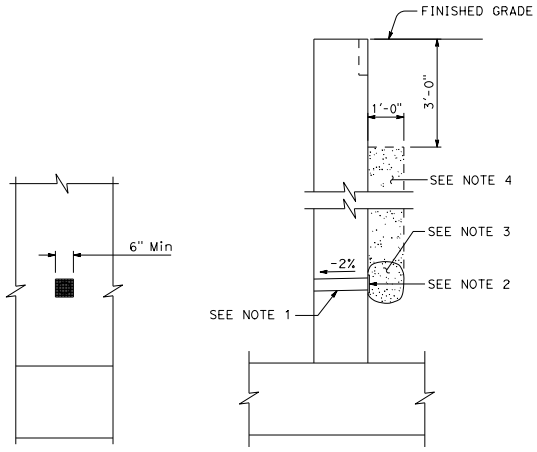

ELEVATION SECTION

BRIDGE DETAIL 3-1

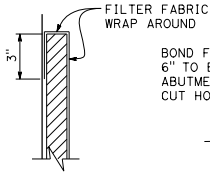

DETAIL B

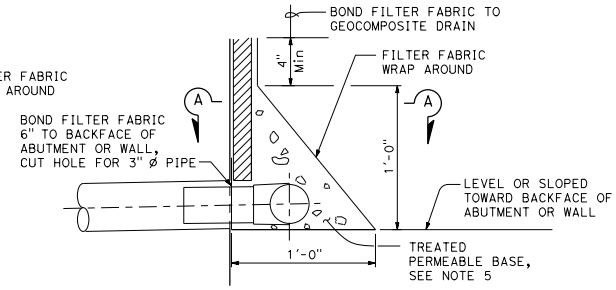

DETAIL C

BRIDGE DETAIL 3-7

WEEP HOLE, PERVIOUS BACKFILL AND GEOCOMPOSITE DRAIN

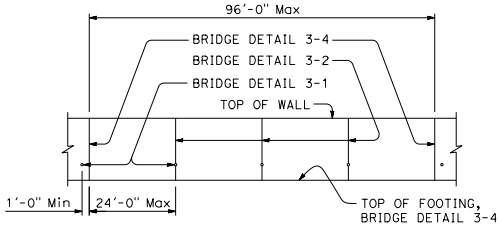

BRIDGE DETAIL 3-3

WALL EXPANSION JOINTS AND WEAKENED PLANES

STATE OF CALIFORNIA
DEPARTMENT OF TRANSPORTATION

BRIDGE DETAILS

NO SCALE

B0-3

2026 STANDARD PLAN B0-3

7-1-26

Return to Table of Contents

Dist	COUNTY	ROUTE	POST MILES TOTAL PROJECT	SHEET No.	TOTAL SHEETS

Peter W. Norboe
REGISTERED CIVIL ENGINEER

September 18, 2026
PLANS APPROVAL DATE

REGISTERED PROFESSIONAL ENGINEER
Peter W. Norboe
No. C57519
Exp. 12-31-27
CIVIL
STATE OF CALIFORNIA

THE STATE OF CALIFORNIA OR ITS OFFICERS OR AGENTS SHALL NOT BE RESPONSIBLE FOR THE ACCURACY OR COMPLETENESS OF SCANNED COPIES OF THIS PLAN SHEET.

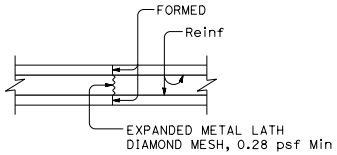

ALTERNATIVE
DECK CONSTRUCTION JOINTS

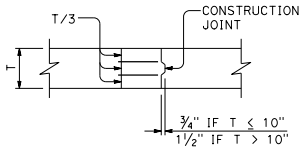

BRIDGE DETAIL 5-2
Top or bottom slab

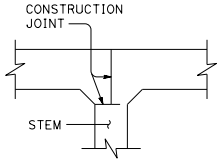

BRIDGE DETAIL 5-3

DECK CONSTRUCTION JOINTS

NOTES:

1. In simple spans, transverse joints are not permitted unless approved by the Engineer.
2. In continuous spans, transverse joints may be located at about the ¼ point of the span.
3. Reinforcing steel shall be continuous through all construction joints.
4. Longitudinal joints shall be located at the edge of a traffic lane unless otherwise permitted by the Engineer.

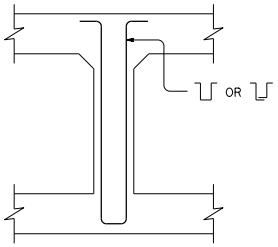

REINFORCED BOX GIRDER
Girder or diaphragm

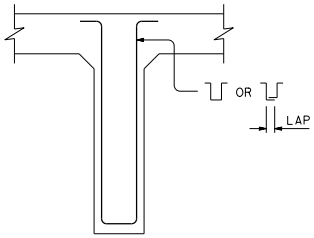

T-BEAM
Girder, bent cap or diaphragm

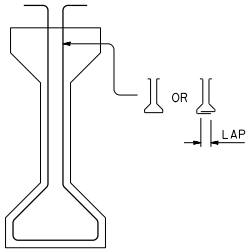

PRECAST GIRDER

A reinforcement bar must be placed inside of each stirrup hook or 90° bend.

BRIDGE DETAIL 5-5

ALTERNATIVE STIRRUPS

STIRRUP SIZE	LAP
#4	5"
#5	6"
#6	7½"
#7	9"
#8	10"

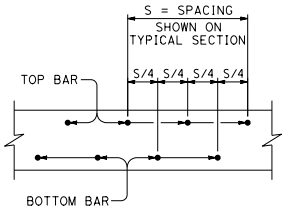

BRIDGE DETAIL 5-11

TRANSVERSE DECK REINFORCEMENT SPACING DIAGRAM

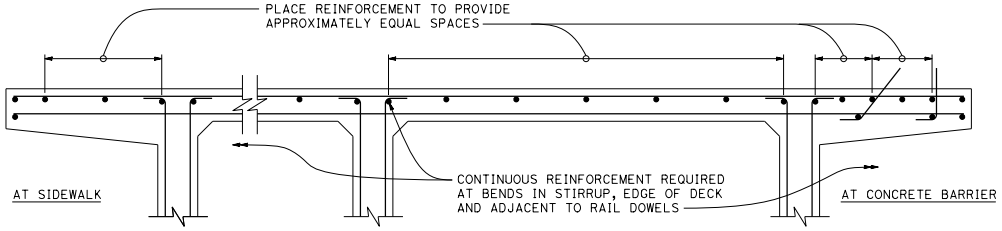

BRIDGE DETAIL 5-15

TOP GIRDER REINFORCEMENT

STATE OF CALIFORNIA
DEPARTMENT OF TRANSPORTATION

BRIDGE DETAILS

NO SCALE

BO-5

2026 STANDARD PLAN BO-5

7-1-26

Return to Table of Contents

Dist	COUNTY	ROUTE	POST MILES TOTAL PROJECT	SHEET No.	TOTAL SHEETS

Peter W. Norboe
REGISTERED CIVIL ENGINEER

September 18, 2026
PLANS APPROVAL DATE

REGISTERED PROFESSIONAL ENGINEER
Peter W. Norboe
No. C57519
Exp. 12-31-27
CIVIL
STATE OF CALIFORNIA

THE STATE OF CALIFORNIA OR ITS OFFICERS OR AGENTS SHALL NOT BE RESPONSIBLE FOR THE ACCURACY OR COMPLETENESS OF SCANNED COPIES OF THIS PLAN SHEET.

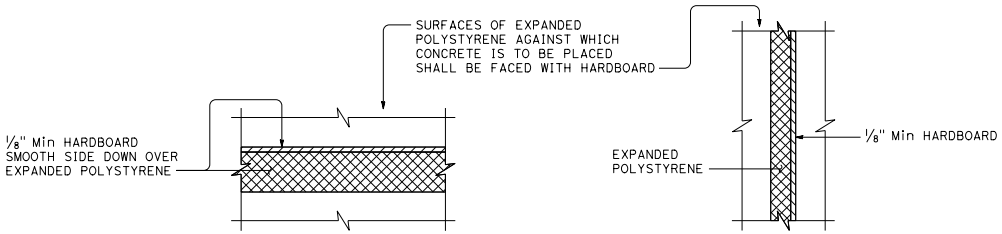

BRIDGE DETAIL 13-1

PROTECTION OF HORIZONTAL POLYSTYRENE

BRIDGE DETAIL 13-2

PROTECTION OF VERTICAL POLYSTYRENE

NOTE:

1. Attach door stiffener angles and bent sheet to steel door with blind rivets.

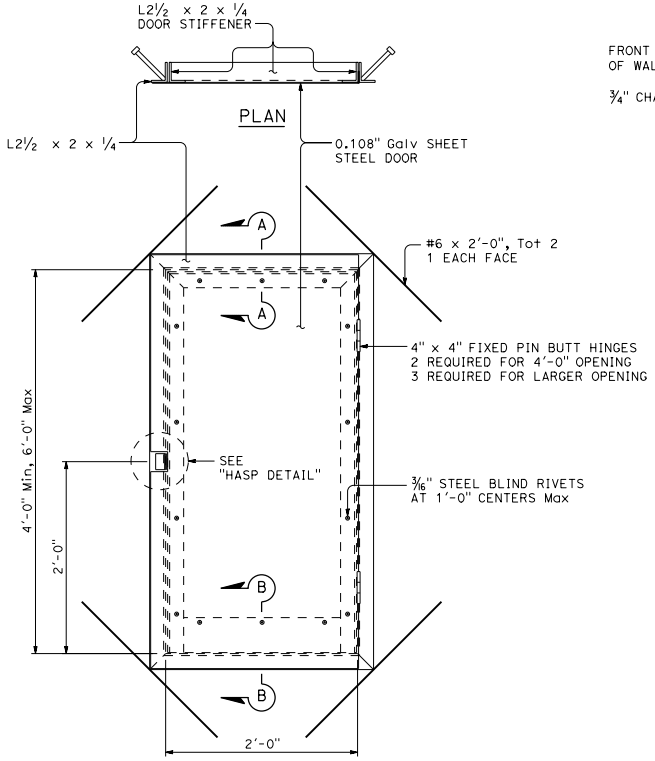

ELEVATION

BRIDGE DETAIL 13-3

ACCESS DOOR

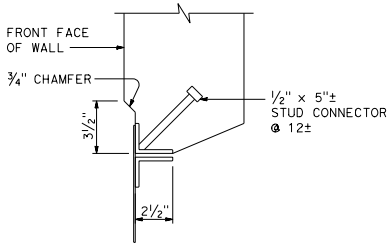

SECTION A-A

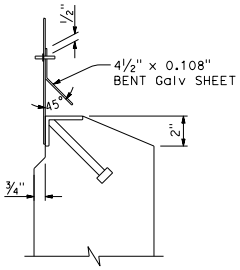

SECTION B-B

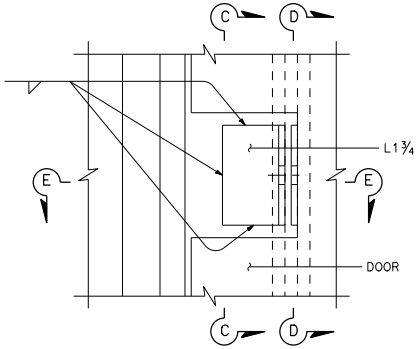

ELEVATION

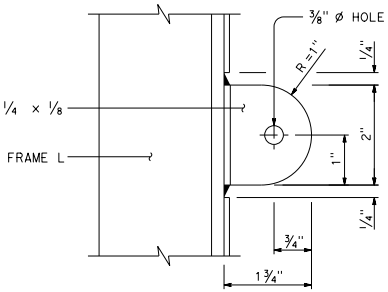

SECTION C-C

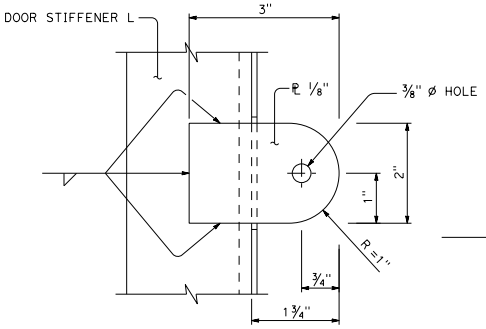

SECTION D-D

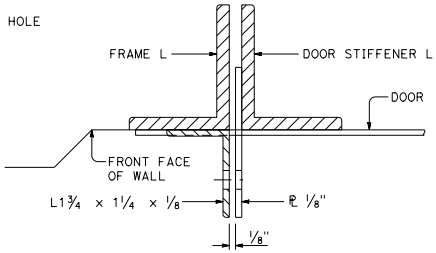

SECTION E-E

HASP DETAIL

STATE OF CALIFORNIA
DEPARTMENT OF TRANSPORTATION

BRIDGE DETAILS

NO SCALE

BO-13

2026 STANDARD PLAN BO-13

7-1-26

Return to Table of Contents

Dist	COUNTY	ROUTE	POST MILES TOTAL PROJECT	SHEET No.	TOTAL SHEETS

REGISTERED CIVIL ENGINEER

September 18, 2026
PLANS APPROVAL DATE

REGISTERED PROFESSIONAL ENGINEER
Amir M. Malek
No. C62397
Exp. 9-30-27
CIVIL
STATE OF CALIFORNIA

THE STATE OF CALIFORNIA OR ITS OFFICERS OR AGENTS SHALL NOT BE RESPONSIBLE FOR THE ACCURACY OR COMPLETENESS OF SCANNED COPIES OF THIS PLAN SHEET.

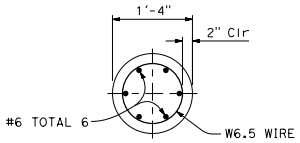

SECTION A-A

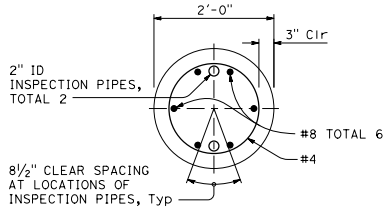

SECTION B-B
With inspection pipes

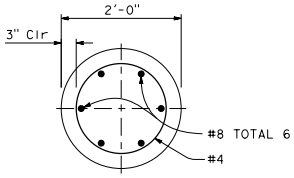

SECTION B-B
Without inspection pipes

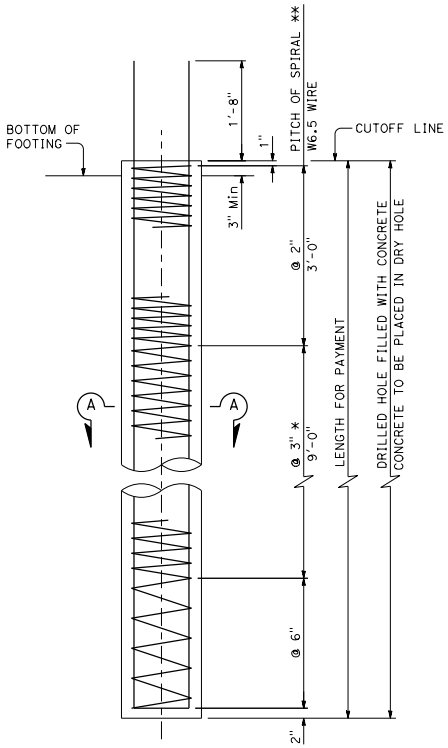

ELEVATION

90 kip AND 140 kip DESIGN CAPACITY

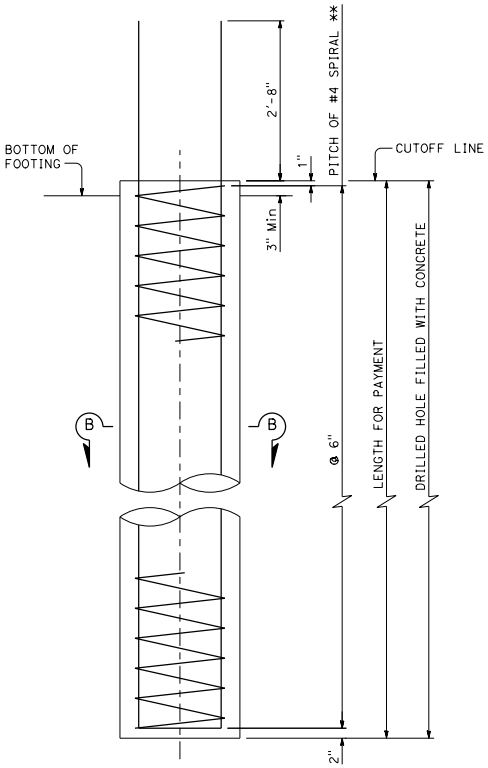

ELEVATION

200 kip DESIGN CAPACITY

* @ 2" at option of Contractor

** Extend at 2" pitch to top of anchor piles and load test piles. For longitudinal reinforcement for anchor piles and load test piles, see Standard Plan B2-10.

NOTES:

1. Reinforcement extending into footing shall be hooked as required to provide clearance to top of footing.
2. Piles shall be extended only in accordance with details shown on the project plans.

DESIGN NOTES:

REINFORCED CONCRETE

fy = 60,000 psi
f'c = 4,000 psi

DESIGN CAPACITY

90 kip and 140 kip PILE

COMPRESSION:

140 kip (Service state)
280 kip (Nominal axial structural resistance)

TENSION:

56 kip (Service state)
140 kip (Nominal axial structural resistance)

200 kip PILE

COMPRESSION:

200 kip (Service state)
400 kip (Nominal axial structural resistance)

TENSION:

80 kip (Service state)
200 kip (Nominal axial structural resistance)

STATE OF CALIFORNIA
DEPARTMENT OF TRANSPORTATION

16" AND 24" CAST-IN-DRILLED-HOLE CONCRETE PILE

NO SCALE

B2-3

7-1-26

2026 STANDARD PLAN B2-3

Return to Table of Contents

Dist	COUNTY	ROUTE	POST MILES TOTAL PROJECT	SHEET No.	TOTAL SHEETS

REGISTERED CIVIL ENGINEER

September 18, 2026
PLANS APPROVAL DATE

REGISTERED PROFESSIONAL ENGINEER Amir M. Malek No. C62397 Exp. 9-30-27 CIVIL STATE OF CALIFORNIA

THE STATE OF CALIFORNIA OR ITS OFFICERS OR AGENTS SHALL NOT BE RESPONSIBLE FOR THE ACCURACY OR COMPLETENESS OF SCANNED COPIES OF THIS PLAN SHEET.

REQUIRED NOMINAL RESISTANCE (TENSION) *

	60 kips OR LESS	GREATER THAN 60 kips
"A" BARS	#6	#8
"E" DIMENSION	1'-8"	2'-8"

* See Pile Data Table on the project plans for nominal resistance (Tension) requirements

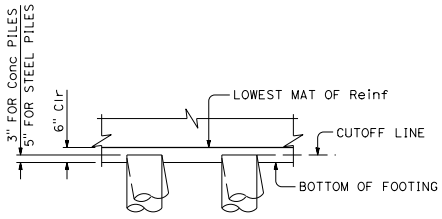

PILE EMBEDMENT

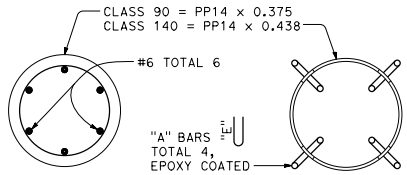

SECTION V-V

SECTION W-W

PP = Steel pipe pile

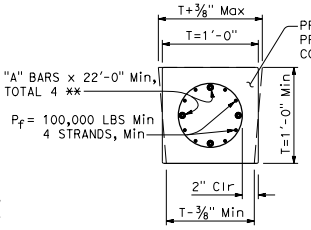

SECTION X-X

** To be in place when pile is cast

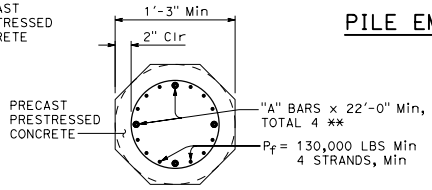

SECTION Y-Y

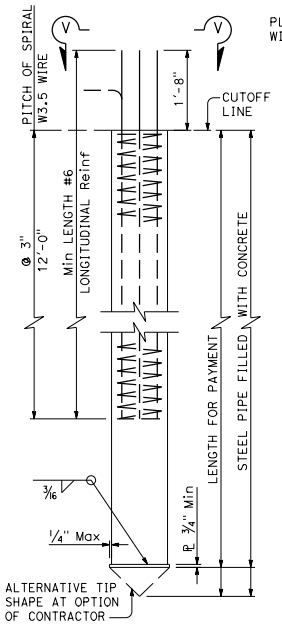

ALTERNATIVE "V"

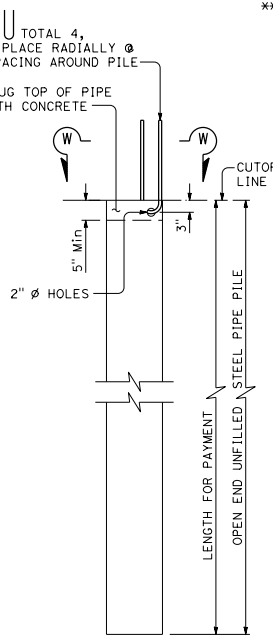

ALTERNATIVE "W"

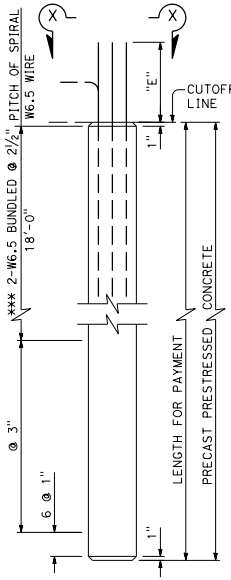

ALTERNATIVE "X"

*** W11.0 at 2" may be substituted

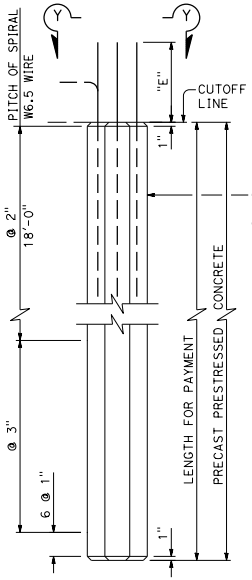

ALTERNATIVE "Y"

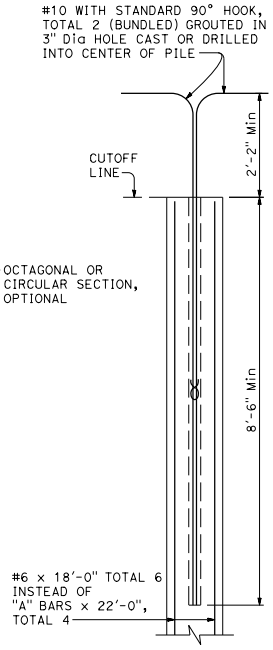

ALTERNATIVE PILE ANCHOR FOR PRESTRESSED PILES

NOTES:

1. Details are the same for both Class 90 and Class 140 piles unless noted otherwise.
2. At the Contractor's option, alternative steel pipe with at least the diameter and wall thickness shown on these plans may be used. The diameter shall not exceed 1'-6".
3. Pile reinforcement and steel pile anchor bars extending into a footing shall be hooked as required to provide clearance to top of footing. Piles shall be extended only with details shown on the Project Plans.
4. 2" clearance to spiral reinforcement shall be maintained if section used is larger than the minimum section shown.
5. Maximum cutoff length at the top of the Alternative "X" and Alternative "Y" Piles is 10'-0".
6. For longitudinal reinforcement and prestressing for anchor piles and load test piles, see Standard Plan B2-10.

DESIGN NOTES

PRECAST PRESTRESSED PILES

P_f = Prestressing force (after losses) — If section used is larger than the minimum section shown, then "P_f" shall provide 700 psi minimum.

Concrete Strength: f'c @ 28 days = 6,000 psi (Alternative "X")
5,000 psi (Alternative "Y")
f'ci @ transfer = 4,000 psi

REINFORCED CONCRETE

f'c = 4,000 psi
fy = 60,000 psi

STEEL PIPE PILE

Fy (Minimum yield strength) = 45,000 psi
Fu (Minimum tensile strength) = 66,000 psi

DESIGN CAPACITY

Class 90

Compression = 90 kip (Service state)
= 180 kip (Nominal axial structural resistance)
Tension = 36 kip (Service state)
= 90 kip (Nominal axial structural resistance)

Class 140

Compression = 140 kip (Service state)
= 280 kip (Nominal axial structural resistance)
Tension = 56 kip (Service state)
= 140 kip (Nominal axial structural resistance)

STATE OF CALIFORNIA
DEPARTMENT OF TRANSPORTATION

PILE DETAILS CLASS 90 AND CLASS 140

NO SCALE

B2-5

2026 STANDARD PLAN B2-5

7-1-26

Return to Table of Contents

Dist	COUNTY	ROUTE	POST MILES TOTAL PROJECT	SHEET No.	TOTAL SHEETS

REGISTERED CIVIL ENGINEER

September 18, 2026

PLANS APPROVAL DATE

REGISTERED PROFESSIONAL ENGINEER Amir M. Malek No. C62397 Exp. 9-30-27 CIVIL STATE OF CALIFORNIA

THE STATE OF CALIFORNIA OR ITS OFFICERS OR AGENTS SHALL NOT BE RESPONSIBLE FOR THE ACCURACY OR COMPLETENESS OF SCANNED COPIES OF THIS PLAN SHEET.

REQUIRED NOMINAL RESISTANCE (TENSION) *

	75 kips OR LESS	GREATER THAN 75 kips
"A" BARS	#6	#8
"E" DIMENSION	1'-8"	2'-8"

* See Pile Data Table on the project plans for nominal resistance (Tension) requirements

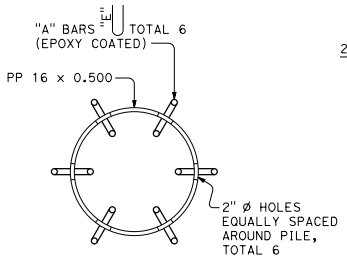

SECTION W-W

PP = Steel pipe pile

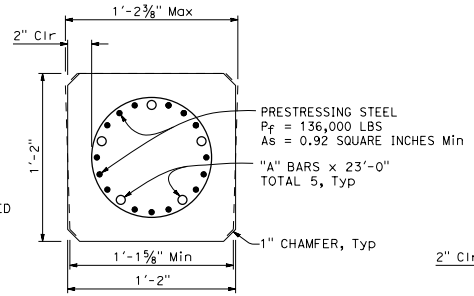

SECTION X-X

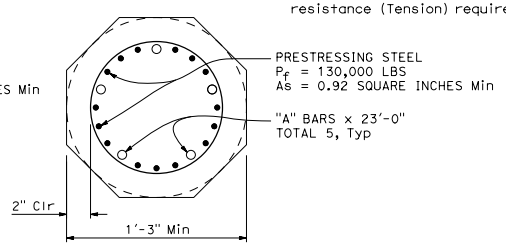

SECTION Y-Y

NOTES:

1. Pile reinforcement extending into footing shall be hooked as required to provide clearance to top of footing. Piles shall be extended only with details shown on the Project Plans.
2. At the Contractor's option, alternative steel pipe with at least the diameter and wall thickness shown on these plans may be used. The diameter shall not exceed 1'-6".
3. Maximum cut-off length at the top of the Alternative "X" and Alternative "Y" piles is 10'-0".
4. 2" clearance to spiral reinforcement shall be maintained if section used is larger than the minimum section shown.

DESIGN NOTES:

DESIGN CAPACITY

Compression = 200 kip (Service state)
= 400 kip (Nominal axial structural resistance)
Tension = 80 kip (Service state)
= 200 kip (Nominal axial structural resistance)

REINFORCED CONCRETE

f'c = 4,000 psi
fy = 60,000 psi

PRECAST PRESTRESSED PILES

P_f = Prestress Force (After losses)
Concrete Strength f'c @ 28 days = 7,000 psi
f'ci @ transfer = 4,000 psi

STEEL PIPE PILE

Fy (minimum yield strength) = 45,000 psi
Fu (minimum tensile strength) = 66,000 psi

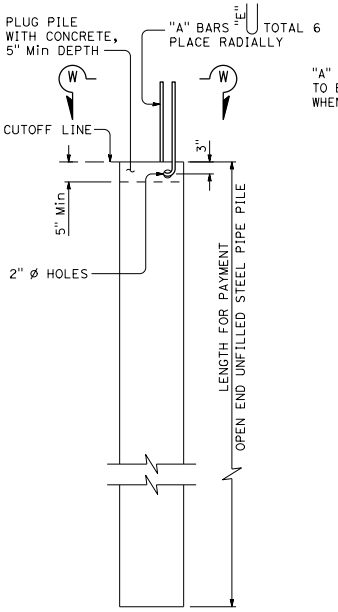

ALTERNATIVE "W"

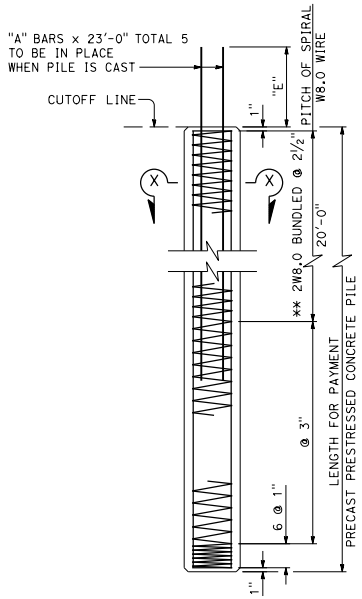

ALTERNATIVE "X"

** W11.0 @ 1¾" may be substituted

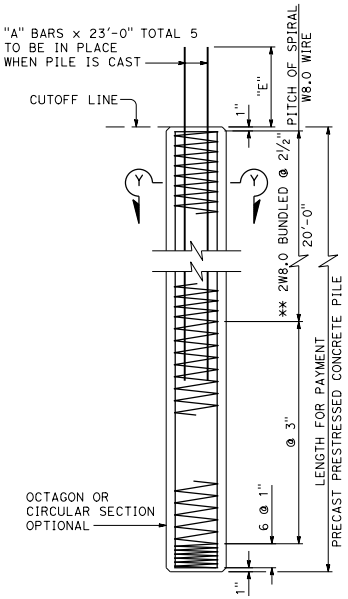

ALTERNATIVE "Y"

** W11.0 @ 1¾" may be substituted

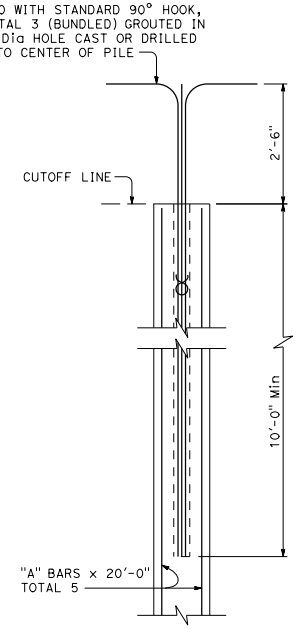

ALTERNATIVE PILE ANCHOR FOR PRESTRESSED PILE

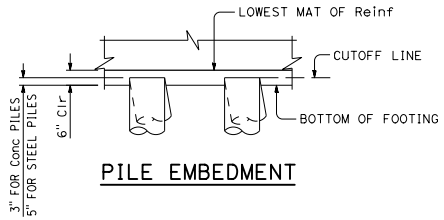

PILE EMBEDMENT

STATE OF CALIFORNIA
DEPARTMENT OF TRANSPORTATION

PILE DETAILS CLASS 200

NO SCALE

B2-8

2026 STANDARD PLAN B2-8

7-1-26

Return to Table of Contents

Dist	COUNTY	ROUTE	POST MILES TOTAL PROJECT	SHEET No.	TOTAL SHEETS

REGISTERED CIVIL ENGINEER

September 18, 2026

PLANS APPROVAL DATE

REGISTERED PROFESSIONAL ENGINEER Amir M. Malek No. C62397 Exp. 9-30-27 CIVIL STATE OF CALIFORNIA

THE STATE OF CALIFORNIA OR ITS OFFICERS OR AGENTS SHALL NOT BE RESPONSIBLE FOR THE ACCURACY OR COMPLETENESS OF SCANNED COPIES OF THIS PLAN SHEET.

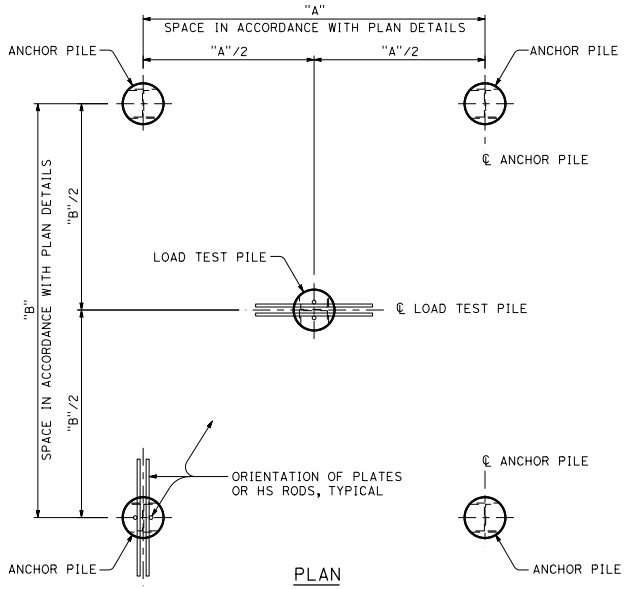

PLAN

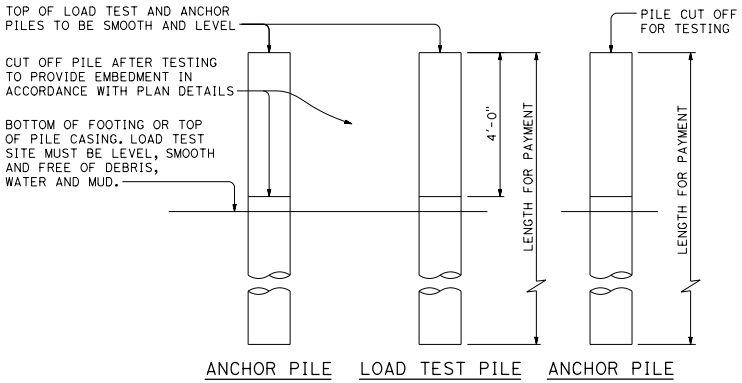

ELEVATION

FIVE - PILE LOAD TEST PILE GROUP

(For compression - tension pile load tests)

NOTE: (Five pile group)

Clear spacing between load test pile and anchor pile shall not be less than five pile diameters or 7'-0", whichever is greater, except that dimension "A" shall not exceed 10'-6" or be less than 5'-6" and dimension "B" shall not exceed 17'-6" or be less than 7'-6". When possible, maximum spacing is to be used.

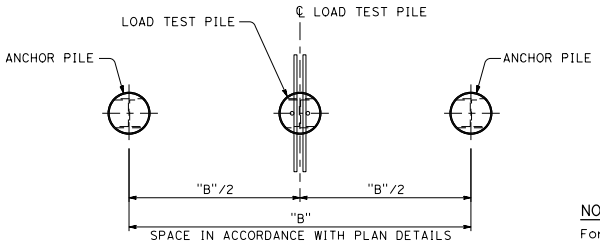

PLAN

NOTE:

For pile details, see Standard Plans B2-10 and B2-11.

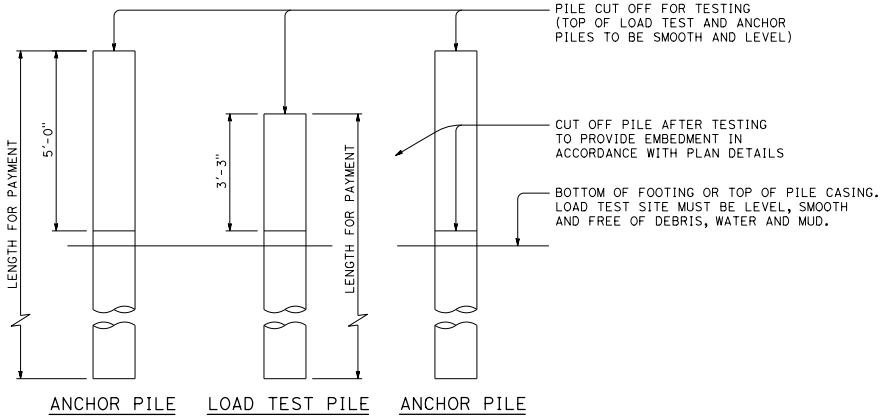

ELEVATION

THREE - PILE LOAD TEST PILE GROUP

(For tension pile load tests only)

NOTE: (Three pile group)

Clear spacing between load test pile and anchor pile shall not be less than five pile diameters or 7'-0", whichever is greater, except that dimension "B" shall not exceed 17'-6" or be less than 6'-6". When possible, maximum spacing is to be used.

STATE OF CALIFORNIA
DEPARTMENT OF TRANSPORTATION

LOAD TEST PILE DETAILS (1)

NO SCALE

B2-9

2026 STANDARD PLAN B2-9

7-1-26

Return to Table of Contents

Dist	COUNTY	ROUTE	POST MILES TOTAL PROJECT	SHEET No.	TOTAL SHEETS

REGISTERED CIVIL ENGINEER

September 18, 2026

PLANS APPROVAL DATE

REGISTERED PROFESSIONAL ENGINEER Amir M. Malek No. C62397 Exp. 9-30-27 CIVIL STATE OF CALIFORNIA

THE STATE OF CALIFORNIA OR ITS OFFICERS OR AGENTS SHALL NOT BE RESPONSIBLE FOR THE ACCURACY OR COMPLETENESS OF SCANNED COPIES OF THIS PLAN SHEET.

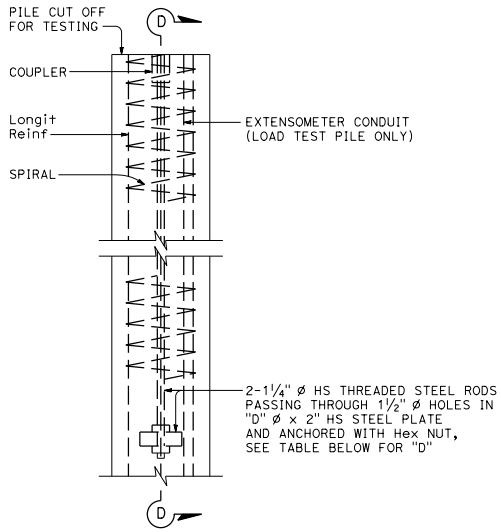

ELEVATION

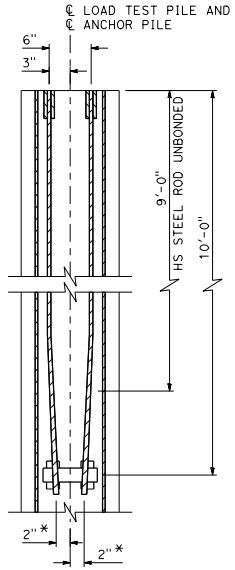

SECTION D-D

* 1½" for Alt "X"

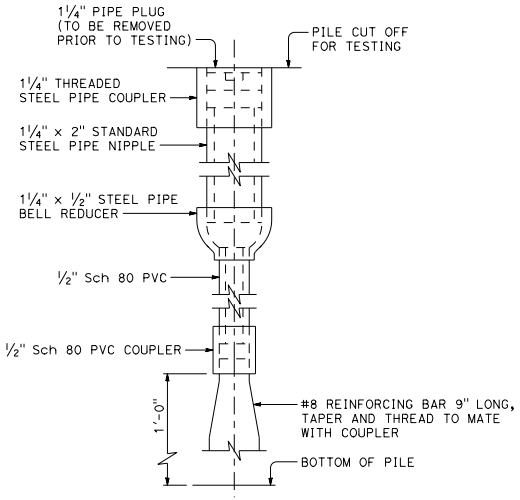

EXTENSOMETER CONDUIT DETAILS

NOTES:

1. For details not shown, see applicable pile details shown on the Project Plans.
2. For the additional top 4'-0" of pile for testing, the spiral reinforcment shall be the same size and placed at the same pitch as detailed for the top of piles shown in the Project Plans.
3. Details applicable for load test and anchor piles.

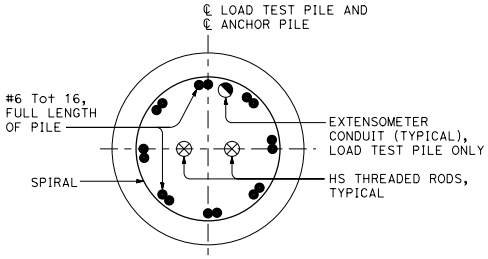

16" CIDH CONCRETE PILE

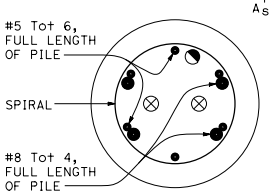

ALTERNATIVE "V"

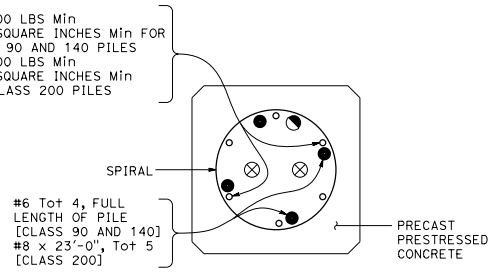

ALTERNATIVE "X"

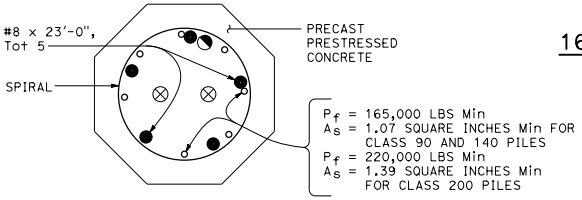

ALTERNATIVE "Y"

CONCRETE PILE DETAILS

PILE TYPE	"D"	MAXIMUM TENSILE TEST FORCE PER PILE
CLASS 90 AND 140 Alt "V", "Y"	7"	210 kips
CLASS 90 AND 140 Alt "X"	6"	210 kips
CLASS 200 Alt "X", "Y"	6¾"	300 kips
CIDH	8"	300 kips

STATE OF CALIFORNIA
DEPARTMENT OF TRANSPORTATION

LOAD TEST PILE DETAILS (2)

NO SCALE

B2-10

2026 STANDARD PLAN B2-10

7-1-26

Return to Table of Contents

Dist	COUNTY	ROUTE	POST MILES TOTAL PROJECT	SHEET No.	TOTAL SHEETS

REGISTERED CIVIL ENGINEER

September 18, 2026

PLANS APPROVAL DATE

REGISTERED PROFESSIONAL ENGINEER Amir M. Malek No. C62397 Exp. 9-30-27 CIVIL STATE OF CALIFORNIA

THE STATE OF CALIFORNIA OR ITS OFFICERS OR AGENTS SHALL NOT BE RESPONSIBLE FOR THE ACCURACY OR COMPLETENESS OF SCANNED COPIES OF THIS PLAN SHEET.

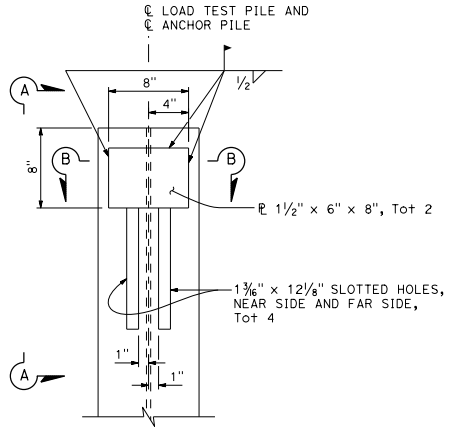

ELEVATION

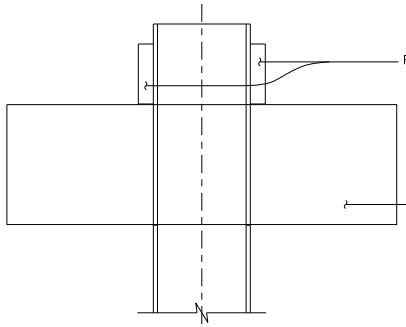

SECTION A-A

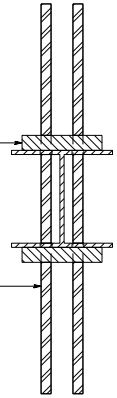

SECTION B-B

Maximum Tensile Test Force Per Pile: HP 10 x 42 = 180 kips
HP 10 x 57 = 245 kips
HP 14 x 89 = 300 kips

STEEL H PILE DETAILS

NOTE:

Alignment of slots and 1½" ℘'s shall permit a ℘ 1" x 12" x 3'-3" to pass through pile parallel to ℄ web of pile and achieve a snug fit. Details applicable for load test and anchor piles. Slots to be cut after piles are driven.

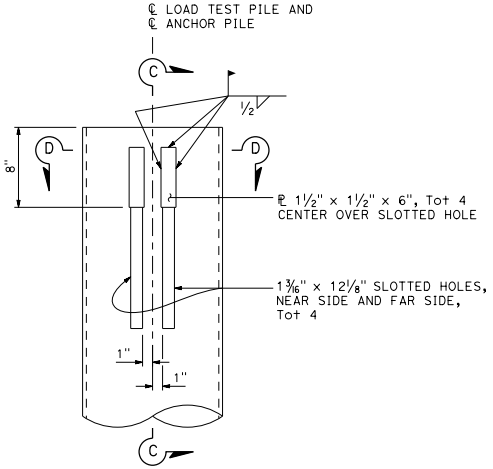

ELEVATION

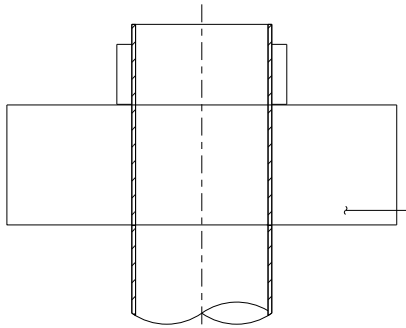

SECTION C-C

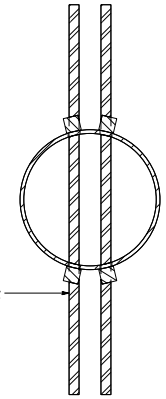

SECTION D-D

Maximum Tensile Test Force Per Pile: Class 90 (PP 14 x 0.375) = 180 kips
Class 140 (PP 14 x 0.438) = 280 kips
Class 200 (PP 16 x 0.50) = 300 kips

ALTERNATIVE "W" STEEL PIPE PILE

NOTE:

Alignment of slots and 1½" ℘'s shall permit a ℘ 1" x 12" x 3'-3" to pass through pile. Details applicable for load test and anchor piles. Slots to be cut after piles are driven.

STATE OF CALIFORNIA
DEPARTMENT OF TRANSPORTATION

LOAD TEST PILE DETAILS (3)

NO SCALE

B2-11

7-1-26

2026 STANDARD PLAN B2-11

Return to Table of Contents

Dist	COUNTY	ROUTE	POST MILES TOTAL PROJECT	SHEET No.	TOTAL SHEETS

REGISTERED CIVIL ENGINEER

September 18, 2026
PLANS APPROVAL DATE

REGISTERED PROFESSIONAL ENGINEER — Gary Wang — No. C58298 — Exp. 6-30-28 — CIVIL — STATE OF CALIFORNIA

THE STATE OF CALIFORNIA OR ITS OFFICERS OR AGENTS SHALL NOT BE RESPONSIBLE FOR THE ACCURACY OR COMPLETENESS OF SCANNED COPIES OF THIS PLAN SHEET.

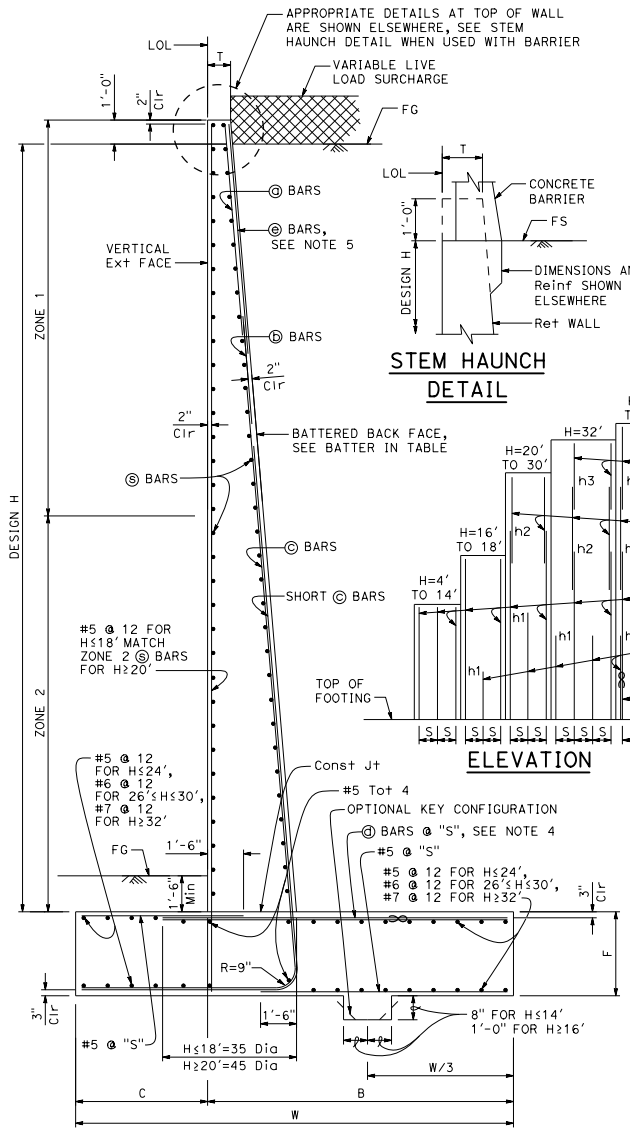

TYPICAL SECTION

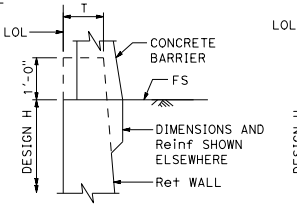

STEM HAUNCH DETAIL

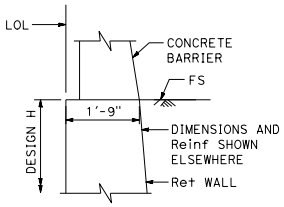

NO STEM HAUNCH ALTERNATIVE

See Notes 6 and 7

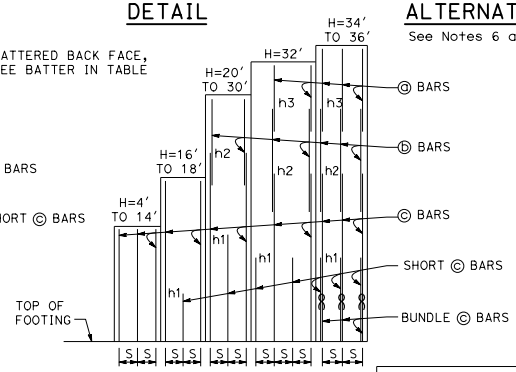

ELEVATION

DESIGN CONDITIONS:

Design H may be exceeded by 6" before going to the next size. Special footing design is required where foundation material is incapable of supporting bearing stress listed in the table.

DESIGN NOTES:

DESIGN: AASHTO LRFD Bridge Design Specifications, 8th Edition with California Amendments, Preface dated April 2019

LS: Variable live load surcharge on level ground surface

DC: Stem Architectural Treatment of thickness up to 2" of concrete (25 psf) considered

CT: 54 kip transverse force applied at 32" above FS, distributed over 10' at the top of wall and 1:1 distribution down and outward. Distribution below footing taken no less than 40'.

SEISMIC: $k_h = 0.2$, $k_v = 0.0$

SOIL BACKFILL: $\phi = 34°$, $\gamma = 120$ pcf SOIL FOR BASE FRICTION: $\phi = 32°$, $\gamma = 120$ pcf

REINFORCED $f'c = 3{,}600$ psi
CONCRETE: $fy = 60{,}000$ psi

LOAD COMBINATIONS AND LIMIT STATES:

Service I $Q = 1.00DC+1.00EV+1.00EH+1.00LS$
Strength I $Q = \alpha DC+\phi EV+\eta EH+1.75LS$
Extreme I $Q = 1.00DC+1.00EV+1.00EH+1.00EQD+1.00EQE$
Extreme II $Q = 1.00DC+1.00EV+1.00EH+0.5LS+1.0CT$

Where:

- Q: Force Effects
- α: 1.25 or 0.90, Whichever Controls Design
- φ: 1.35 or 1.00, Whichever Controls Design
- η: 1.50 or 0.90, Whichever Controls Design
- DC: Dead Load of Structure Components
- EH: Horizontal Earth Fill Pressure
- EV: Vertical Earth Pressure from Earth Fill Weight
- LS: Live Load Surcharge
- EQE: Seismic Earth Pressure
- EQD: Soil and Structural and Nonstructural Components Inertia
- CT: Vehicular Collision Force

NOTES:

1. For details not shown and drainage notes, see B3-5.
2. For wall stem joint details, see B0-3 3-3 and B0-3 3-4.
3. At ⓒ bars:
   H ≤ 6', no splices are allowed within 1'-8" above the top of footing.
   H > 6', no splices are allowed within H/4 above the top of footing.
4. Bundle ⓓ bars from H=22' to 36'.
5. Provide #6 @ 10" x 18'-0" ⓔ bars over a distance of 8'-0" measured from all expansion joints, begin wall and end wall locations. For H ≤ 16', hook ⓔ bar into footing and reduce bar length as needed to maintain minimum clear cover.
6. For no stem haunch alternative, where H ≤ 18': Increase stem thickness, "T", to constant 1'-9" with no batter.
7. For no stem haunch alternative, where H > 18': Adjust stem batter to maintain original stem thickness at top of footing according to data defined in table.

SYMBOLS:

Ser - service limit state I
Str - strength limit state I
Ext I - extreme event limit state I
Ext II - extreme event limit state II
B' - effective footing width (ft)
q'_o - net bearing stress (ksf), OG assumed to be FG at toe
q_o - gross uniform bearing stress (ksf)
h1 = Top of footing to top of short ⓒ bar
h2 = Top of footing to top of ⓒ bar
h3 = Top of footing to top of ⓑ bar
Zone 1 = Top half of stem height
Zone 2 = Bottom half of stem height
∞ - Bundle of two bars

TABLE OF REINFORCING STEEL, DIMENSIONS AND DATA

DESIGN H	4'	6'	8'	10'	12'	14'	16'	18'	20'	22'	24'	26'	28'	30'	32'	34'	36'
W	6'-9"	6'-6"	6'-7"	7'-4"	8'-3"	9'-3"	9'-9"	10'-8"	11'-8"	12'-9"	13'-9"	14'-10"	15'-11"	17'-3"	18'-3"	19'-3"	20'-3"
C	2'-6"	2'-6"	2'-4"	2'-4"	2'-6"	3'-0"	3'-3"	3'-8"	3'-8"	3'-9"	4'-0"	4'-4"	4'-8"	5'-3"	5'-6"	6'-0"	6'-6"
B	4'-3"	4'-0"	4'-3"	5'-0"	5'-9"	6'-3"	6'-6"	7'-0"	8'-0"	9'-0"	9'-9"	10'-6"	11'-3"	12'-0"	12'-9"	13'-3"	13'-9"
F	1'-4"	1'-4"	1'-4"	1'-4"	1'-6"	1'-8"	1'-8"	1'-9"	1'-9"	1'-11"	2'-2"	2'-5"	2'-10"	3'-3"	3'-6"	4'-7"	4'-9"
T	11.5"	11.5"	11.5"	11.5"	11.5"	11.5"	11.5"	11.5"	11.5"	11.5"	11.5"	11.5"	11.5"	11.5"	11.5"	1'-1"	1'-1"
BATTER	0.5:12	0.5:12	0.5:12	0.5:12	0.5:12	0.5:12	0.5:12	0.5:12	0.5:12	0.5:12	0.625:12	0.625:12	0.75:12	1:12	1:12	1.2:12	1.2:12
SPACING "S"	12"	12"	12"	11"	9"	8"	6"	5"	6"	5"	5"	5"	5"	5"	6"	10"	8"
ⓐ BARS	-	-	-	-	-	-	-	-	-	-	-	-	-	-	#7	#6	#6
ⓑ BARS	-	-	-	-	-	-	-	-	#7	#6	#6	#6	#6	#6	#9	#9	#8
ⓒ BARS	#6	#6	#6	#6	#6	#6	#7	#7	#8	#8	#8	#9	#9	#9	#10	#11	#11
ⓓ BARS	#5	#5	#5	#6	#6	#6	#6	#6	#8	#7	#8	#9	#9	#9	#10	#11	#11
h1	-	-	-	-	-	-	9'-5"	9'-7"	12'-8"	12'-7"	13'-7"	14'-8"	15'-8"	15'-8"	19'-5"	16'-6"	14'-8"
h2	-	-	-	-	-	-	-	-	14'-2"	16'-10"	17'-7"	20'-5"	21'-11"	23'-8"	21'-9"	21'-6"	21'-6"
h3	-	-	-	-	-	-	-	-	-	-	-	-	-	-	24'-10"	24'-5"	26'-4"
ZONE 1 ⓢ BARS	#4 @ 18"	#5 @ 18"	#5 @ 18"	#5 @ 18"	#5 @ 18"	#5 @ 18"	#5 @ 18"	#5 @ 18"	#5 @ 18"	#5 @ 18"	#5 @ 18"	#5 @ 18"	#5 @ 18"	#5 @ 12"	#5 @ 12"	#5 @ 12"	#5 @ 12"
ZONE 2 ⓢ BARS	#5 @ 18"	#5 @ 18"	#5 @ 18"	#5 @ 18"	#5 @ 18"	#5 @ 18"	#4 @ 12"	#5 @ 12"	#5 @ 12"	#5 @ 12"	#5 @ 12"	#5 @ 12"	#5 @ 12"	#6 @ 12"	#6 @ 12"	#7 @ 12"	#7 @ 12"
Ser: B', q'_o	6.5, 0.8	6.1, 1.0	5.4, 1.4	5.7, 1.8	6.2, 2.1	7.0, 2.2	7.1, 2.5	7.7, 2.7	8.4, 3.0	9.1, 3.4	9.7, 3.7	10.5, 4.0	11.1, 4.3	12.3, 4.4	12.9, 4.7	13.2, 5.2	13.9, 5.4
Str: B', q_o	6.4, 1.6	3.6, 1.7	2.7, 2.8	2.7, 3.6	3.1, 4.1	3.7, 4.3	3.5, 5.2	4.0, 5.4	4.4, 5.8	4.9, 6.3	5.2, 7.0	5.7, 7.5	6.0, 8.2	6.8, 8.3	7.1, 8.9	6.8, 10.7	7.1, 11.2
Ext I: B', q_o	5.3, 1.1	4.6, 1.5	3.9, 2.2	4.0, 2.8	4.3, 3.4	4.9, 3.8	4.8, 4.5	5.3, 4.9	5.6, 5.5	6.0, 6.3	6.3, 7.0	6.8, 7.5	7.2, 8.2	8.1, 8.4	8.4, 9.1	8.5, 10.4	9.1, 10.8
Ext II: B', q_o	2.5, 2.4	2.2, 3.3	2.3, 3.9	3.4, 3.4	4.7, 3.2	6.3, 3.0	7.2, 3.1	8.6, 3.0	9.8, 3.2	11.3, 3.4	12.4, 3.6	13.7, 3.8	14.9, 4.1	16.5, 4.2	17.5, 4.5	18.4, 4.9	19.6, 5.1

STATE OF CALIFORNIA
DEPARTMENT OF TRANSPORTATION

RETAINING WALL TYPE 1 (CASE 1)

NO SCALE

B3-1A

2026 STANDARD PLAN B3-1A

7-1-26

Return to Table of Contents

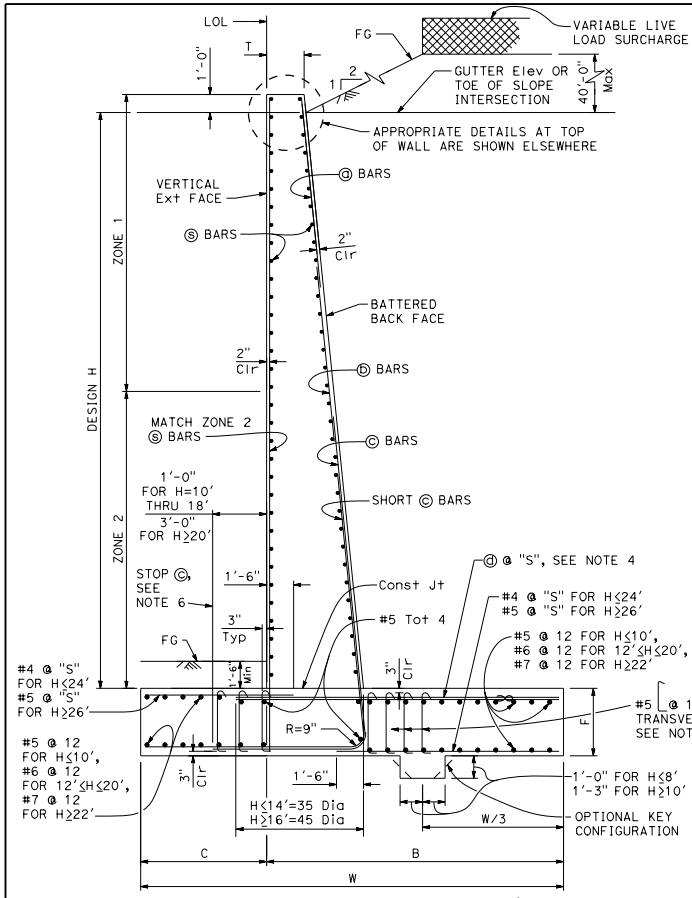

TYPICAL SECTION

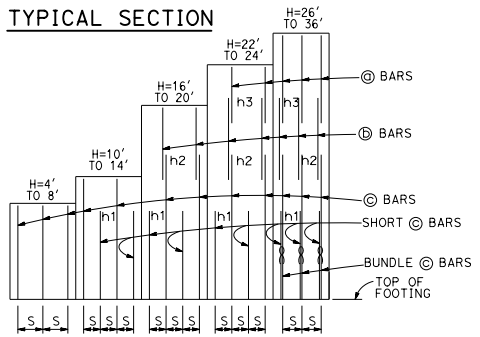

ELEVATION

DESIGN CONDITIONS:

Design H may be exceeded by 6" before going to the next size. Special footing design is required where foundation material is incapable of supporting bearing stress listed in the table.

DESIGN NOTES:

DESIGN: AASHTO LRFD Bridge Design Specifications, 8th Edition with California Amendments, Preface dated April 2019

LS: Variable live load surcharge on level ground surface

DC: Stem Architectural Treatment of thickness up to 2" of concrete (25 psf) considered

SEISMIC: $k_h = 0.2$
$k_v = 0.0$

SOIL BACKFILL: $\phi = 34°$, $\gamma = 120$ pcf
SOIL FOR BASE FRICTION: $\phi = 32°$, $\gamma = 120$ pcf

REINFORCED CONCRETE: $f'c = 3{,}600$ psi, $fy = 60{,}000$ psi

LOAD COMBINATIONS AND LIMIT STATES:

Service I $Q = 1.00DC+1.00EV+1.00EH+1.00LS$
Strength I $Q = \alpha DC+\beta EV+\eta EH+1.75LS$
Extreme I $Q = 1.00DC+1.00EV+1.00EH+1.00EQD+1.00EQE$

Where:

- Q: Force Effects
- α: 1.25 or 0.90, Whichever Controls Design
- β: 1.35 or 1.00, Whichever Controls Design
- η: 1.50 or 0.90, Whichever Controls Design
- DC: Dead Load of Structure Components
- EH: Horizontal Earth Fill Pressure
- EV: Vertical Earth Pressure from Earth Fill Weight
- LS: Live Load Surcharge
- EQE: Seismic Earth Pressure
- EQD: Soil and Structural and Nonstructural Components Inertia

Dist	COUNTY	ROUTE	POST MILES TOTAL PROJECT	SHEET No.	TOTAL SHEETS

REGISTERED CIVIL ENGINEER

September 18, 2026
PLANS APPROVAL DATE

REGISTERED PROFESSIONAL ENGINEER Gary Wang No. C58298 Exp. 6-30-28 CIVIL STATE OF CALIFORNIA

THE STATE OF CALIFORNIA OR ITS OFFICERS OR AGENTS SHALL NOT BE RESPONSIBLE FOR THE ACCURACY OR COMPLETENESS OF SCANNED COPIES OF THIS PLAN SHEET.

NOTES:

1. For details not shown and drainage notes, see (B3-5).
2. For wall stem joint details, see (B0-3 / 3-3) and (B0-3 / 3-4).
3. At ⓒ and short ⓒ bars:
   H ≤ 6', no splices are allowed within 1'-8" above the top of footing.
   H > 6', no splices are allowed within H/4 above the top of footing.
4. Bundle ⓓ bars for H ≥ 26'.
5. Hook stirrups around & space with alternating transverse reinforcement at 2 x "S". For required number of toe or heel stirrup rows, see Table. The first stirrups are placed adjacent to the stem as shown.
6. Extend ⓒ bars to end of toe for H=4' to 8'.

SYMBOLS:

Ser - service limit state I
Str - strength limit state I
Ext I - extreme event limit state I
B' - effective footing width (ft)
q_o' - net bearing stress (ksf), OG assumed to be FG at toe
q_o - gross uniform bearing stress (ksf)
h1 = Top of footing to top of short ⓒ bar
h2 = Top of footing to top of ⓒ bar
h3 = Top of footing to top of ⓑ bar
Zone 1 = Top half of stem height
Zone 2 = Bottom half of stem height
∞ - Bundle of two bars

TABLE OF REINFORCING STEEL, DIMENSIONS AND DATA

DESIGN H	4'	6'	8'	10'	12'	14'	16'	18'	20'	22'	24'	26'	28'	30'	32'	34'	36'
W	6'-6"	6'-6"	7'-8"	8'-9"	10'-0"	11'-7"	14'-0"	16'-3"	16'-3"	17'-6"	19'-0"	20'-3"	21'-6"	22'-9"	23'-6"	24'-6"	25'-6"
C	2'-3"	2'-3"	2'-10"	3'-0"	3'-6"	3'-10"	4'-9"	5'-0"	5'-0"	5'-6"	5'-9"	6'-3"	6'-6"	6'-9"	7'-0"	7'-6"	8'-0"
B	4'-3"	4'-3"	4'-10"	5'-9"	6'-6"	7'-9"	9'-3"	11'-3"	11'-3"	12'-0"	13'-3"	14'-0"	15'-0"	16'-0"	16'-6"	17'-0"	17'-6"
F	1'-6"	1'-6"	2'-0"	2'-3"	2'-6"	2'-8"	2'-10"	3'-0"	3'-4"	3'-6"	3'-6"	3'-7"	3'-7"	3'-9"	3'-9"	4'-0"	4'-4"
T	11.5"	11.5"	11.5"	11.5"	11.5"	11.5"	11.5"	11.5"	1'-0"	1'-0"	1'-1"	1'-4"	1'-6"	1'-10"	2'-1"	2'-9"	3'-7"
BATTER	0.5:12	0.5:12	0.5:12	0.5:12	0.5:12	0.5:12	0.625: 12	0.875:12	0.875:12	1.125:12	1.125:12	1.125:12	1.125:12	1.2: 12	1.2:12	1.2:12	1.2:12
SPACING "S"	16"	14"	10"	7"	7"	7"	7"	7"	7"	6"	6"	10"	8"	8"	7"	7"	7"
ⓐ BARS	-	-	-	-	-	-	-	-	-	#5	#5	#5	#5	#5	#5	#5	#5
ⓑ BARS	-	-	-	-	-	-	#6	#6	#6	#7	#7	#7	#7	#7	#7	#7	#7
ⓒ BARS	#5	#5	#6	#6	#7	#8	#8	#9	#10	#10	#11	#11	#11	#11	#11	#11	#11
ⓓ BARS	#5	#6	#5	#6	#6	#7	#8	#10	#10	#10	#10	#10	#10	#10	#10	#10	#10
h1	-	-	-	8'-3"	10'-0"	10'-7"	12'-2"	12'-11"	13'-8"	12'-7"	13'-9"	14'-6"	15'-0"	16'-3"	17'-0"	17'-9"	18'-8"
h2	-	-	-	-	-	-	15'-1"	17'-8"	20'-3"	19'-4"	21'-9"	21'-9"	21'-4"	22'-3"	22'-6"	23'-0"	23'-6"
h3	-	-	-	-	-	-	-	-	-	20'-4"	22'-1"	22'-7"	22'-10"	23'-10"	28'-7"	30'-1"	31'-0"
No. OF TOE STIRRUPS	0	0	0	0	0	0	0	0	0	0	0	0	0	0	0	5	6
No. OF HEEL STIRRUPS	0	0	0	0	0	0	0	2	3	4	6	7	7	8	8	8	8
ZONE 1 Ⓢ BARS	#4 @ 18"	#5 @ 18"	#5 @ 18"	#5 @ 18"	#5 @ 18"	#5 @ 18"	#5 @ 18"	#5 @ 18"	#5 @ 18"	#5 @ 18"	#5 @ 12"	#5 @ 12"	#5 @ 12"	#6 @ 12"	#6 @ 12"	#7 @ 12"	#7 @ 12"
ZONE 2 Ⓢ BARS	#5 @ 18"	#5 @ 18"	#5 @ 18"	#5 @ 18"	#5 @ 18"	#5 @ 18"	#5 @ 12"	#5 @ 12"	#5 @ 12"	#6 @ 12"	#6 @ 12"	#6 @ 12"	#7 @ 12"	#7 @ 12"	#7 @ 12"	#8 @ 12"	#8 @ 12"
Ser: B', q_o	6.2, 0.6	6.5, 0.8	7.5, 1.1	8.2, 1.5	9.3, 1.7	10.8, 2.0	13.6, 2.1	15.9, 2.4	15.1, 2.9	16.2, 3.1	17.6, 3.4	18.8, 3.7	19.9, 4.0	21.0, 4.3	21.4, 4.6	22.3, 4.9	23.0, 5.2
Str: B', q_o	6.0, 1.3	6.4, 1.6	7.3, 2.1	8.1, 2.6	9.1, 3.0	10.5, 3.5	13.3, 3.6	15.6, 4.1	14.7, 4.8	15.8, 5.2	17.2, 5.6	18.3, 5.9	19.4, 6.3	20.4, 6.8	20.8, 7.3	21.6, 7.7	22.2, 8.1
Ext I: B', q_o	5.8, 1.7	4.8, 2.6	5.2, 3.5	5.5, 4.5	6.1, 5.1	7.2, 5.6	9.7, 5.3	11.7, 5.6	10.4, 7.0	11.2, 7.5	12.3, 7.9	13.2, 8.2	14.0, 8.7	14.7, 9.2	14.8, 9.9	15.4, 10.4	15.9, 11.0

STATE OF CALIFORNIA
DEPARTMENT OF TRANSPORTATION

RETAINING WALL TYPE 1 (CASE 2)

NO SCALE

B3-1B

2026 STANDARD PLAN B3-1B

7-1-26

Return to Table of Contents

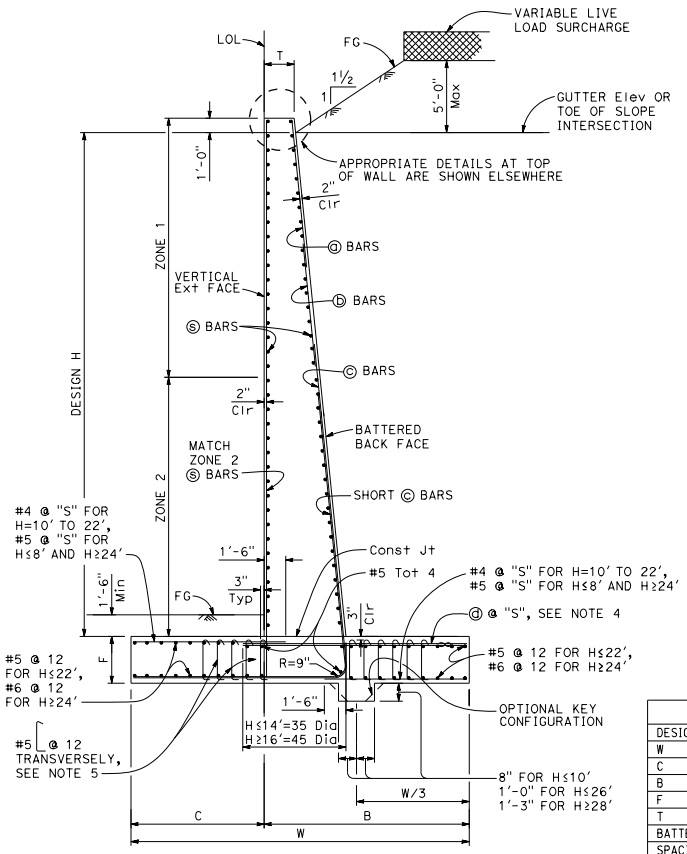

TYPICAL SECTION

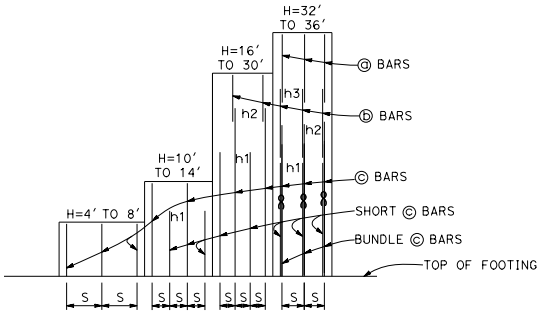

ELEVATION

DESIGN CONDITIONS:

Design H may be exceeded by 6" before going to the next size.
Special footing design is required where foundation material is incapable of supporting bearing stress listed in the table.

DESIGN NOTES:

DESIGN: AASHTO LRFD Bridge Design Specifications, 8th Edition with California Amendments, Preface dated April 2019

LS: Variable live load surcharge on level ground surface

DC: Stem Architectural Treatment of thickness up to 2" of concrete (25 psf) considered

SEISMIC: $k_h = 0.2$, $k_v = 0.0$

SOIL BACKFILL: $\phi = 34°$, $\gamma = 120$ pcf

SOIL FOR BASE FRICTION: $\phi = 32°$, $\gamma = 120$ pcf

REINFORCED CONCRETE: $f'c = 3{,}600$ psi, $fy = 60{,}000$ psi

LOAD COMBINATIONS AND LIMIT STATES:

Service I $Q = 1.00DC+1.00EV+1.00EH+1.00LS$
Strength I $Q = \alpha DC+\beta EV+\eta EH+1.75LS$
Extreme I $Q = 1.00DC+1.00EV+1.00EH+1.00EQD+1.00EQE$

Where:

Q: Force Effects
α: 1.25 or 0.90, Whichever Controls Design
β: 1.35 or 1.00, Whichever Controls Design
η: 1.50 or 0.90, Whichever Controls Design
DC: Dead Load of Structure Components
EH: Horizontal Earth Fill Pressure
EV: Vertical Earth Pressure from Earth Fill Weight
LS: Live Load Surcharge
EQE: Seismic Earth Pressure
EQD: Soil and Structural and Nonstructural Components Inertia

Dist	COUNTY	ROUTE	POST MILES TOTAL PROJECT	SHEET No.	TOTAL SHEETS

REGISTERED CIVIL ENGINEER

September 18, 2026
PLANS APPROVAL DATE

REGISTERED PROFESSIONAL ENGINEER Gary Wang No. C58298 Exp. 6-30-28 CIVIL STATE OF CALIFORNIA

THE STATE OF CALIFORNIA OR ITS OFFICERS OR AGENTS SHALL NOT BE RESPONSIBLE FOR THE ACCURACY OR COMPLETENESS OF SCANNED COPIES OF THIS PLAN SHEET.

NOTES:

1. For details not shown and drainage notes, see B3-5.
2. For wall stem joint details, see B0-3 3-3 and B0-3 3-4.
3. At ⓒ bars:
   H ≤ 6', no splices are allowed within 1'-8" above the top of footing.
   H > 6', no splices are allowed within H/4 above the top of footing.
4. Bundle ⓓ bars for H ≥ 36'.
5. Hook stirrups around & space with alternating transverse reinforcement at 2 x "S". For required number of toe or heel stirrup rows, see Table. The first stirrups are placed adjacent to the stem as shown.

SYMBOLS:

Ser - service limit state I
Str - strength limit state I
Ext I - extreme event limit state I
B' - effective footing width (ft)
q_o' - net bearing stress (ksf), OG assumed to be FG at toe
q_o - gross uniform bearing stress (ksf)
h1 = Top of footing to top of short ⓒ bar
h2 = Top of footing to top of ⓒ bar
h3 = Top of footing to top of ⓑ bar
Zone 1 = Top half of stem height
Zone 2 = Bottom half of stem height
⊃⊂ - Bundle of two bars

TABLE OF REINFORCING STEEL, DIMENSIONS AND DATA

DESIGN H	4'	6'	8'	10'	12'	14'	16'	18'	20'	22'	24'	26'	28'	30'	32'	34'	36'
W	5'-9"	6'-0"	6'-9"	8'-2"	9'-9"	11'-1"	12'-6"	13'-5"	14'-5"	15'-4"	16'-3"	17'-6"	19'-3"	20'-0"	21'-0"	22'-3"	23'-6"
C	1'-9"	2'-0"	2'-3"	2'-8"	3'-0"	3'-6"	3'-9"	4'-3"	4'-9"	5'-0"	5'-3"	6'-0"	7'-6"	7'-9"	8'-0"	8'-6"	9'-3"
B	4'-0"	4'-0"	4'-6"	5'-6"	6'-9"	7'-7"	8'-9"	9'-2"	9'-8"	10'-4"	11'-0"	11'-6"	11'-9"	12'-3"	13'-0"	13'-9"	14'-3"
F	1'-4"	1'-4"	1'-4"	1'-4"	1'-6"	1'-8"	1'-10"	2'-1"	2'-2"	2'-3"	2'-10"	2'-10"	2'-10"	3'-0"	3'-3"	3'-3"	3'-3"
T	11.5"	11.5"	11.5"	11.5"	11.5"	11.5"	11.5"	11.5"	11.5"	11.5"	11.5"	11.5"	11.5"	1'-3"	1'-6"	1'-8"	2'-1"
BATTER	0.5:12	0.5:12	0.5:12	0.5:12	0.5:12	0.5:12	0.5:12	0.5:12	0.75:12	0.875:12	0.75:12	1:12	1.125:12	1.2:12	1.2:12	1.2:12	1.2:12
SPACING "S"	16"	16"	14"	8"	8"	7"	6"	6"	6"	6"	7"	7"	6"	6"	6"	5"	8"
ⓐ BARS	-	-	-	-	-	-	-	-	-	-	-	-	-	-	#5	#6	#6
ⓑ BARS	-	-	-	-	-	-	#5	#5	#5	#6	#7	#7	#7	#7	#8	#9	#9
ⓒ BARS	#5	#5	#6	#5	#7	#6	#7	#8	#8	#9	#10	#10	#10	#10	#10	#10	#11
ⓓ BARS	#5	#5	#6	#6	#8	#7	#10	#9	#8	#9	#11	#10	#10	#10	#11	#11	#11
h1	-	-	-	7'-3"	10'-6"	9'-8"	11'-2"	12'-7"	13'-4"	14'-6"	17'-10"	18'-5"	17'-4"	18'-4"	19'-1"	16'-10"	16'-9"
h2	-	-	-	-	-	-	13'-11"	16'-8"	18'-1"	19'-5"	22'-2"	23'-4"	23'-4"	24'-10"	23'-7"	19'-7"	19'-6"
h3	-	-	-	-	-	-	-	-	-	-	-	-	-	-	28'-1"	27'-5"	27'-8"
No. of Toe Stirrups	0	0	0	0	0	0	0	0	0	0	3	4	4	5	5	6	6
No. of Heel Stirrups	0	0	0	0	0	0	0	3	3	4	5	5	5	5	5	5	5
ZONE 1 Ⓢ BARS	#4 @ 18"	#5 @ 18"	#5 @ 18"	#5 @ 18"	#5 @ 18"	#5 @ 18"	#5 @ 18"	#5 @ 18"	#5 @ 18"	#5 @ 18"	#5 @ 18"	#4 @ 12"	#5 @ 12"	#5 @ 12"	#5 @ 12"	#6 @ 12"	#6 @ 12"
ZONE 2 Ⓢ BARS	#5 @ 18"	#5 @ 18"	#5 @ 18"	#5 @ 18"	#5 @ 18"	#5 @ 18"	#4 @ 12"	#5 @ 12"	#5 @ 12"	#5 @ 12"	#5 @ 12"	#6 @ 12"	#6 @ 12"	#7 @ 12"	#7 @ 12"	#7 @ 12"	#7 @ 12"
Ser: B', q_o'	5.5, 0.6	4.4, 1.2	4.5, 1.7	5.5, 1.9	6.5, 2.2	7.4, 2.4	8.4, 2.7	9.1, 2.9	9.8, 3.2	10.5, 3.4	11.2, 3.7	12.3, 3.8	14.5, 3.6	14.5, 4.0	15.2, 4.3	16.5, 4.4	17.7, 4.5
Str: B', q_o	5.5, 1.3	3.1, 2.3	2.7, 3.4	3.1, 3.9	3.6, 4.5	4.0, 5.1	4.5, 5.5	4.7, 6.2	4.9, 6.9	5.3, 7.3	5.7, 7.7	6.4, 7.8	8.1, 6.8	7.7, 8.1	8.1, 8.7	9.1, 8.6	10.0, 8.5
Ext I: B', q_o	4.4, 1.3	3.1, 2.1	4.1, 2.5	4.9, 2.8	5.8, 3.3	6.6, 3.6	7.3, 4.2	7.7, 4.7	8.1, 5.2	8.4, 5.7	8.7, 6.4	9.4, 6.8	11.6, 6.1	11.6, 6.7	12.0, 7.4	12.9, 7.6	13.9, 7.6

STATE OF CALIFORNIA
DEPARTMENT OF TRANSPORTATION

RETAINING WALL TYPE 1 (CASE 3)

NO SCALE

B3-1C

2026 STANDARD PLAN B3-1C

7-1-26

Return to Table of Contents

Dist	COUNTY	ROUTE	POST MILES TOTAL PROJECT	SHEET No.	TOTAL SHEETS

REGISTERED CIVIL ENGINEER

September 18, 2026

PLANS APPROVAL DATE

Gary Wang No. C58298 Exp. 6-30-28 CIVIL STATE OF CALIFORNIA REGISTERED PROFESSIONAL ENGINEER

THE STATE OF CALIFORNIA OR ITS OFFICERS OR AGENTS SHALL NOT BE RESPONSIBLE FOR THE ACCURACY OR COMPLETENESS OF SCANNED COPIES OF THIS PLAN SHEET.

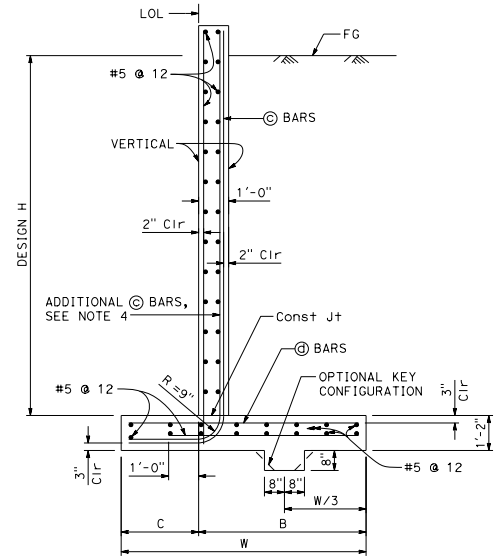

SPREAD FOOTING SECTION

Place concrete in toe against undisturbed material, except as permitted by the Engineer.

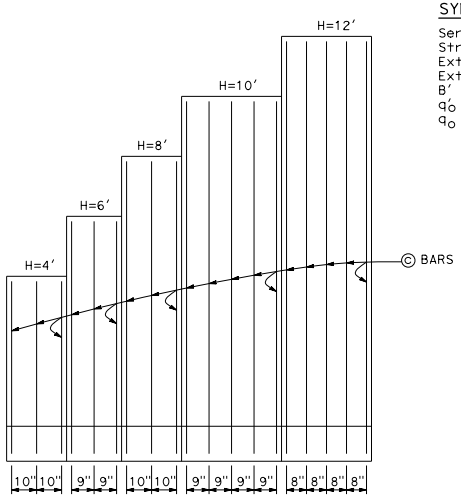

ELEVATION

SYMBOLS:

Ser - service limit state I
Str - strength limit state I
Ext I - extreme event limit state I
Ext II - extreme event limit state II
B' - effective footing width (ft)
q'_o - net bearing stress (ksf), OG assumed to be FG at toe
q_o - gross uniform bearing stress (ksf)

NOTES:

1. For details not shown and drainage notes, see (B3-5).
2. For wall stem joint details, see (B0-3 / 3-3) and (B0-3 / 3-4).
3. At ⓒ bars:
   H ≤ 6', no splices are allowed within 1'-8" above the top of footing.
   H > 6', no splices are allowed within H/4 above the top of footing.
4. Provide #6 @ 8" ⓒ bars in addition to tabulated ⓒ bars over a distance of 8'-0" measured from all expansion joints, begin wall and end wall location.

DESIGN CONDITIONS:

Design H may be exceeded by 6" before going to the next size. Special footing design is required where foundation material is incapable of supporting bearing stress listed in the table.

DESIGN NOTES:

DESIGN: AASHTO LRFD Bridge Design Specifications, 8th Edition with California Amendments, Preface dated April 2019

LS: Variable live load surcharge on level ground surface

DC: Stem Architectural Treatment of thickness up to 2" of concrete (25 psf) considered

CT: 54 kip transverse force applied at 32" above FS, distributed over 10 feet at the top of wall and 1 : 1 distribution down and outward. Distribution below footing taken no less than 40'.

SEISMIC: $k_h = 0.2$, $k_v = 0.0$

SOIL BACKFILL: $\phi = 34°$, $\gamma = 120$ pcf
SOIL FOR BASE FRICTION: $\phi = 32°$, $\gamma = 120$ pcf

REINFORCED CONCRETE: f'c = 3,600 psi, fy = 60,000 psi

LOAD COMBINATIONS AND LIMIT STATES:

Service I	Q = 1.00DC+1.00EV+1.00EH+1.00LS
Strength I	Q = αDC+βEV+ηEH+1.75LS
Extreme I	Q = 1.00DC+1.00EV+1.00EH+1.00EQD+1.00EQE
Extreme II	Q = 1.00DC+1.00EV+1.00EH+0.5LS+1.0CT

Where:

Q:	Force Effects
α:	1.25 or 0.90, Whichever Controls Design
β:	1.35 or 1.00, Whichever Controls Design
η:	1.50 or 0.90, Whichever Controls Design
DC:	Dead Load of Structure Components
EH:	Horizontal Earth Fill Pressure
EV:	Vertical Earth Pressure from Earth Fill Weight
LS:	Live Load Surcharge
EQE:	Seismic Earth Pressure
EQD:	Soil and Structural and Nonstructural Components Inertia
CT:	Vehicular Collision Force

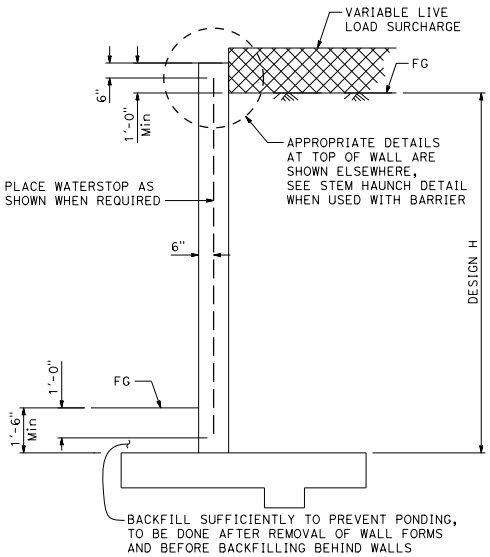

DESIGN SECTION

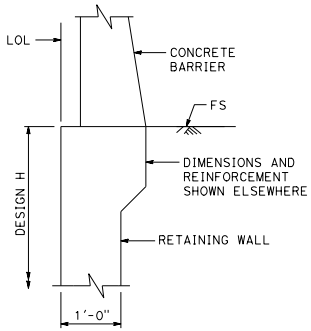

STEM HAUNCH DETAIL

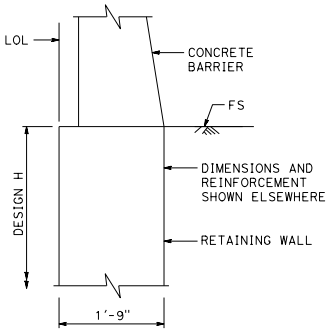

NO STEM HAUNCH ALTERNATIVE

TABLE OF REINFORCING STEEL, DIMENSIONS AND DATA

DESIGN H	4'	6'	8'	10'	12'
W	6'-0"	6'-3"	6'-6"	7'-4"	8'-2"
C	2'-0"	2'-0"	2'-0"	2'-4"	2'-7"
B	4'-0"	4'-3"	4'-6"	5'-0"	5'-7"
ⓒ BARS	#6 @ 10	#6 @ 9	#7 @ 10	#7 @ 9	#7 @ 8
ⓓ BARS	#5 @ 10	#5 @ 9	#6 @ 10	#7 @ 9	#7 @ 8
Ser: B', q'_o	6.0, 0.8	5.6, 1.1	5.2, 1.5	5.7, 1.7	6.2, 2.0
Str: B', q_o	4.5, 1.4	3.2, 1.9	2.5, 3.0	2.8, 3.4	3.1, 3.9
Ext I: B', q_o	4.4, 1.2	4.1, 1.7	3.7, 2.4	4.1, 2.8	4.4, 3.2
Ext II: B', q_o	1.1, 4.7	1.6, 4.3	2.0, 4.3	3.4, 3.3	4.6, 3.1

STATE OF CALIFORNIA
DEPARTMENT OF TRANSPORTATION

RETAINING WALL TYPE 1A (CASE 1)

NO SCALE

B3-3A

7-1-26

2026 STANDARD PLAN B3-3A

Return to Table of Contents

Dist	COUNTY	ROUTE	POST MILES TOTAL PROJECT	SHEET No.	TOTAL SHEETS

REGISTERED CIVIL ENGINEER

September 18, 2026
PLANS APPROVAL DATE

REGISTERED PROFESSIONAL ENGINEER Gary Wang No. C58298 Exp. 6-30-28 CIVIL STATE OF CALIFORNIA

THE STATE OF CALIFORNIA OR ITS OFFICERS OR AGENTS SHALL NOT BE RESPONSIBLE FOR THE ACCURACY OR COMPLETENESS OF SCANNED COPIES OF THIS PLAN SHEET.

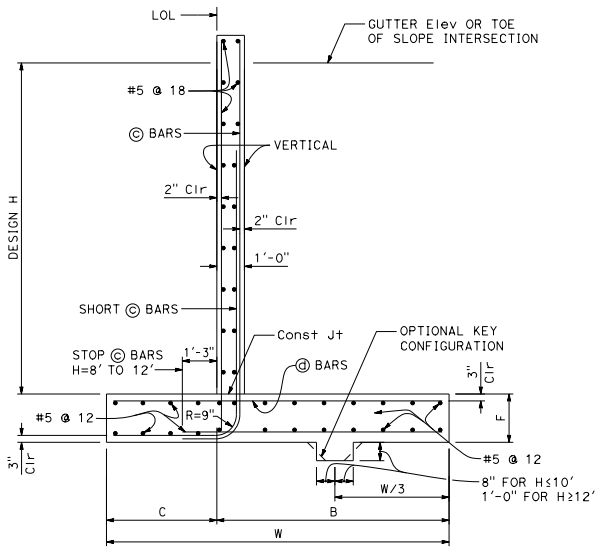

SPREAD FOOTING SECTION

Place concrete in toe against undisturbed material, except as permitted by the Engineer.

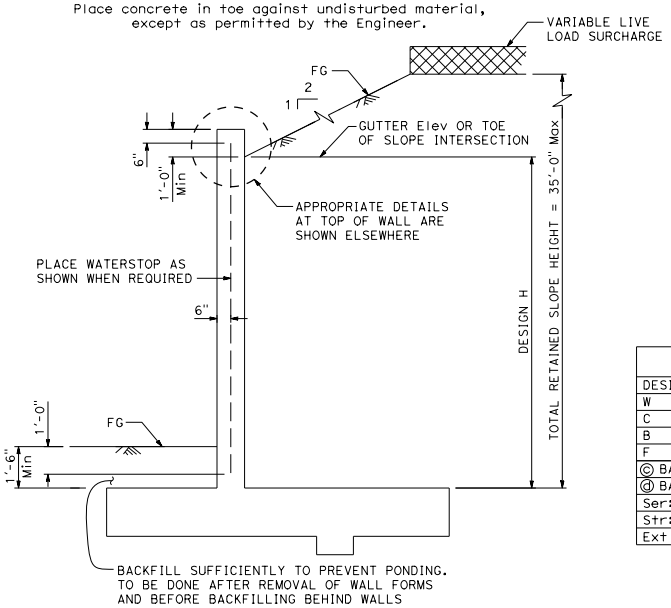

DESIGN SECTION

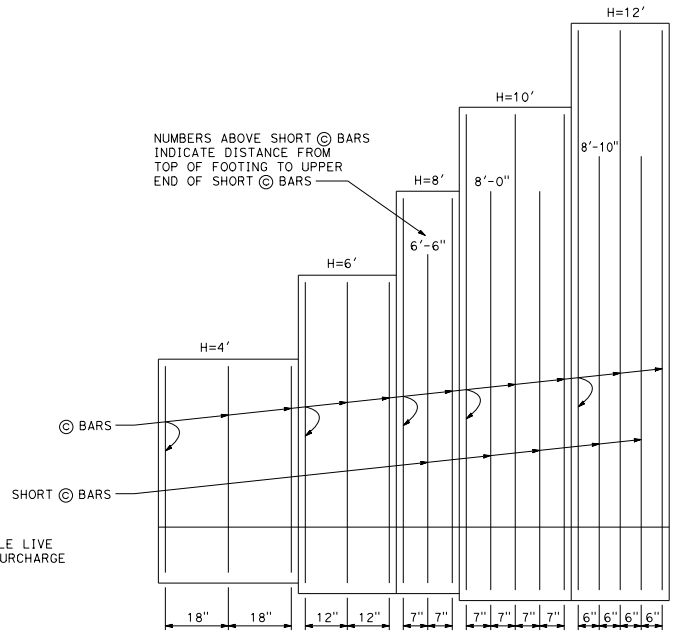

ELEVATION

TABLE OF REINFORCING STEEL, DIMENSIONS AND DATA					
DESIGN H	4'	6'	8'	10'	12'
W	4'-3"	5'-9"	6'-7"	7'-4"	8'-3"
C	1'-3"	1'-9"	2'-4"	2'-4"	2'-6"
B	3'-0"	4'-0"	4'-3"	5'-0"	5'-9"
F	1'-4"	1'-7"	1'-7"	1'-9"	1'-9"
© BARS	#5 @ 18	#5 @ 12	#5 @ 7	#6 @ 7	#7 @ 6
ⓓ BARS	#5 @ 18	#5 @ 12	#5 @ 7	#5 @ 7	#6 @ 6
Ser: B', q_o'	3.9, 0.7	5.3, 1.0	6.0, 1.2	6.2, 1.7	6.8, 2.0
Str: B', q_o	3.8, 1.4	5.2, 1.8	5.9, 2.1	6.0, 2.8	6.6, 3.4
Ext I: B', q_o	2.6, 2.6	3.6, 3.1	3.9, 3.6	3.7, 5.0	4.0, 5.9

NOTES:

1. For details not shown and drainage notes, see (B3-5).
2. For wall stem joint details, see (B0-3 / 3-3) and (B0-3 / 3-4).
3. At © and short © bars:
   H ≤ 6', no splices are allowed within 1'-8" above the top of footing.
   H > 6', no splices are allowed within H/4 above the top of footing.

DESIGN CONDITIONS:

Design H may be exceeded by 6" before going to the next size. Special footing design is required where foundation material is incapable of supporting bearing stress listed in the table.

DESIGN NOTES:

DESIGN: AASHTO LRFD Bridge Design Specifications, 8th Edition with California Amendments, Preface dated April 2019

LS: Variable live load surcharge on level ground surface

DC: Stem Architectural Treatment of thickness up to 2" of concrete (25 psf) considered

SEISMIC: $k_h = 0.2$, $k_v = 0.0$

SOIL BACKFILL: $\phi = 34°$, $\gamma = 120$ pcf

SOIL FOR BASE FRICTION: $\phi = 32°$, $\gamma = 120$ pcf

REINFORCED CONCRETE: f'c = 3,600 psi, fy = 60,000 psi

LOAD COMBINATIONS AND LIMIT STATES:

Service I: $Q = 1.00DC+1.00EV+1.00EH+1.00LS$

Strength I: $Q = \alpha DC+\beta EV+\eta EH+1.75LS$

Extreme I: $Q = 1.00DC+1.00EV+1.00EH+1.00EQD+1.00EQE$

Where:

- Q: Force Effects
- α: 1.25 or 0.90, Whichever Controls Design
- β: 1.35 or 1.00, Whichever Controls Design
- η: 1.50 or 0.90, Whichever Controls Design
- DC: Dead Load of Structure Components
- EH: Horizontal Earth Fill Pressure
- EV: Vertical Earth Pressure from Earth Fill Weight
- LS: Live Load Surcharge
- EQE: Seismic Earth Pressure
- EQD: Soil and Structural and Nonstructural Components Inertia

SYMBOLS:

Ser - service limit state I
Str - strength limit state I
Ext I - extreme event limit state I
B' - effective footing width (ft)
q_o' - net bearing stress (ksf), OG assumed to be FG at toe
q_o - gross uniform bearing stress (ksf)

STATE OF CALIFORNIA
DEPARTMENT OF TRANSPORTATION

RETAINING WALL TYPE 1A (CASE 2)

NO SCALE

B3-3B

7-1-26

Return to Table of Contents

Dist	COUNTY	ROUTE	POST MILES TOTAL PROJECT	SHEET No.	TOTAL SHEETS

REGISTERED CIVIL ENGINEER

September 18, 2026
PLANS APPROVAL DATE

Gary Wang
No. C58298
Exp. 6-30-28
CIVIL
STATE OF CALIFORNIA
REGISTERED PROFESSIONAL ENGINEER

THE STATE OF CALIFORNIA OR ITS OFFICERS OR AGENTS SHALL NOT BE RESPONSIBLE FOR THE ACCURACY OR COMPLETENESS OF SCANNED COPIES OF THIS PLAN SHEET.

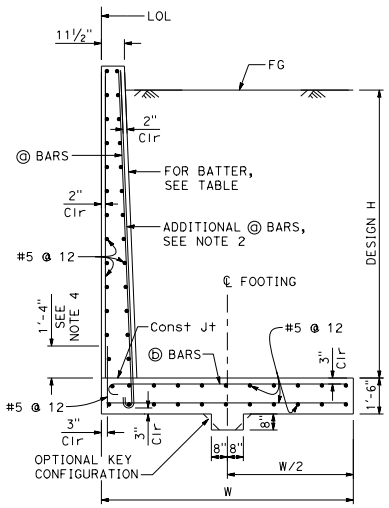

SPREAD FOOTING SECTION

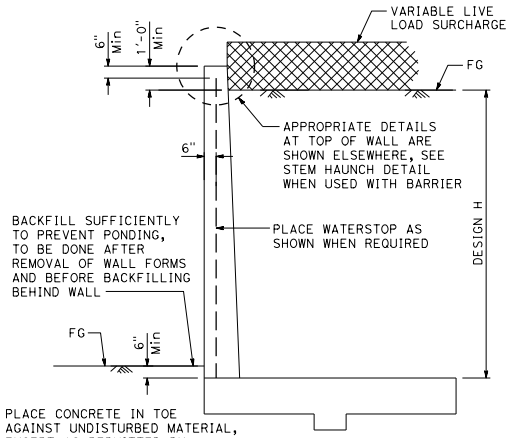

DESIGN SECTION

For drainage notes and other details, see B3-5

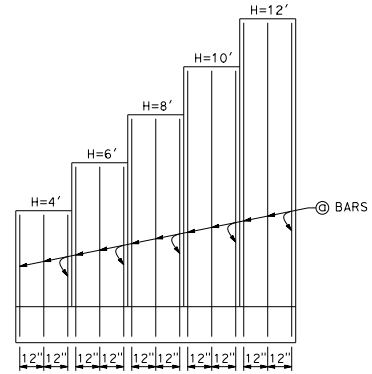

ELEVATION

NOTES:

1. At ⓐ bars:
   H ≤ 6', no splices are allowed within 1'-8" above the top of footing.
   H > 6', no splices are allowed within H/4 above the top of footing.
2. Provide #6 @ 8" ⓐ bars in addition to tabulated ⓐ bars over a distance of 8'-0" measured from all expansion joints, begin wall and end wall locations.
3. Constant stem thickness of 1'-9" at all DESIGN H, in No Stem Haunch Alternative.
4. Non-contact lap splice length. Maximum transverse spacing of spliced rebars to be 3".

DESIGN CONDITIONS:

Design H may be exceeded by 6" before going to the next size. Special footing design is required where foundation material is incapable of supporting bearing stress listed in the table.

DESIGN NOTES:

DESIGN: AASHTO LRFD Bridge Design Specifications, 8th Edition with California Amendments, Preface dated April 2019

LS: Variable Live Load surcharge on level ground surface

DC: Stem Architectural Treatment of thickness up to 2" of concrete (25 psf) considered

CT: 54 kip transverse force applied at 32" above FG, distributed over 10' at the top of wall and 1:1 distribution down and outward. Distribution below footing taken no less than 40'.

SEISMIC: $k_h = 0.2$
$k_v = 0.0$

SOIL BACKFILL: $\phi = 34°$, $\gamma = 120$ pcf

SOIL FOR BASE FRICTION: $\phi = 32°$, $\gamma = 120$ pcf

REINFORCED CONCRETE: $f'c = 3{,}600$ psi
$fy = 60{,}000$ psi

LOAD COMBINATIONS AND LIMIT STATES:

Service I	$Q = 1.00DC+1.00EV+1.00EH+1.00LS$
Strength I	$Q = \alpha DC+\beta EV+\eta EH+1.75LS$
Extreme I	$Q = 1.00DC+1.00EV+1.00EH+1.00EQD+1.00EQE$
Extreme II	$Q = 1.00DC+1.00EV+1.00EH+0.50LS+1.00CT$

Where:

Q:	Force Effects
α:	1.25 or 0.90, Whichever Controls Design
β:	1.35 or 1.00, Whichever Controls Design
η:	1.50 or 0.90, Whichever Controls Design
DC:	Dead Load of Structure Components
EH:	Horizontal Earth Fill Pressure
EV:	Vertical Earth Pressure from Earth Fill Weight
LS:	Live Load Surcharge
EQE:	Seismic Earth Pressure
EQD:	Soil and Structural and Nonstructural Components Inertia
CT:	Vehicular Collision Force

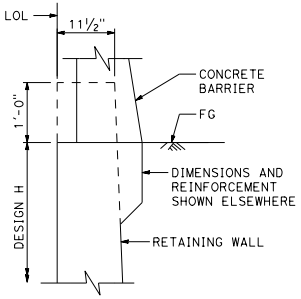

STEM HAUNCH DETAIL

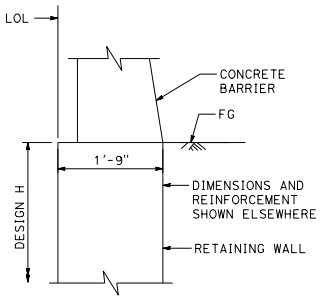

NO STEM HAUNCH ALTERNATIVE

See Note 3

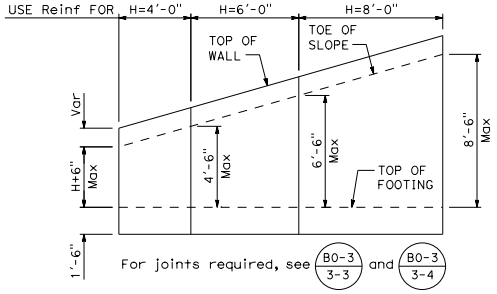

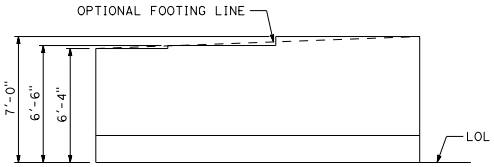

TYPICAL LAYOUT EXAMPLE

TABLE OF REINFORCING STEEL, DIMENSIONS AND DATA					
DESIGN H	4'	6'	8'	10'	12'
W	6'-4"	6'-6"	7'-0"	8'-0"	8'-10"
BATTER	NONE	¼:12	¼:12	⅜:12	½:12
ⓐ BARS	#7 @ 12	#7 @ 12	#7 @ 12	#7 @ 12	#7 @ 12
ⓑ BARS	#5 @ 6	#5 @ 6	#5 @ 6	#6 @ 6	#7 @ 6
Ser: B', q_o'	5.0, 1.6	4.6, 2.1	4.6, 2.6	5.2, 3.0	5.6, 3.4
Str: B', q_o	3.6, 2.4	2.5, 3.3	2.4, 4.3	2.9, 4.7	3.2, 5.3
Ext I: B', q_o	3.0, 2.3	2.6, 3.4	2.5, 4.8	2.8, 5.5	3.0, 6.6
Ext II: B', q_o	0.9, 7.3	1.3, 6.6	2.1, 5.6	3.4, 4.5	4.5, 4.4

SYMBOLS:

Ser - service limit state I
Str - strength limit state I
Ext I - extreme event limit state I
Ext II - extreme event limit state II
B' - effective footing width (ft)
q_o' - net bearing stress (ksf), OG assumed to be FG at toe
q_o - gross uniform bearing stress (ksf)

STATE OF CALIFORNIA
DEPARTMENT OF TRANSPORTATION

RETAINING WALL TYPE 5 (CASE 1)

NO SCALE

B3-4A

2026 STANDARD PLAN B3-4A

7-1-26

Return to Table of Contents

Dist	COUNTY	ROUTE	POST MILES TOTAL PROJECT	SHEET No.	TOTAL SHEETS

REGISTERED CIVIL ENGINEER

September 18, 2026
PLANS APPROVAL DATE

REGISTERED PROFESSIONAL ENGINEER Gary Wang No. C58298 Exp. 6-30-28 CIVIL STATE OF CALIFORNIA

THE STATE OF CALIFORNIA OR ITS OFFICERS OR AGENTS SHALL NOT BE RESPONSIBLE FOR THE ACCURACY OR COMPLETENESS OF SCANNED COPIES OF THIS PLAN SHEET.

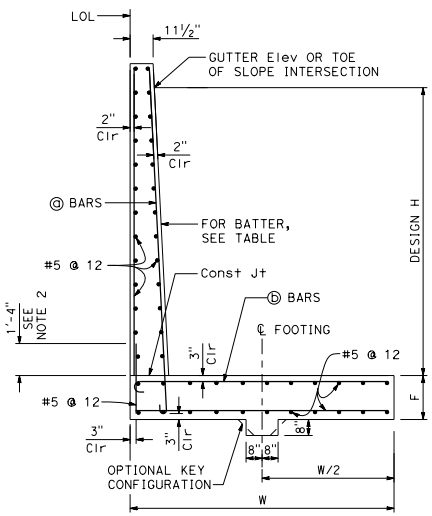

SPREAD FOOTING SECTION

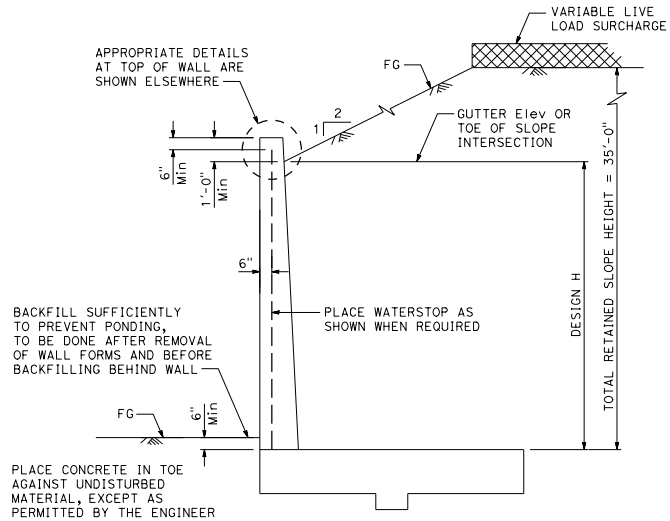

DESIGN SECTION

For drainage notes and other details, see B3-5

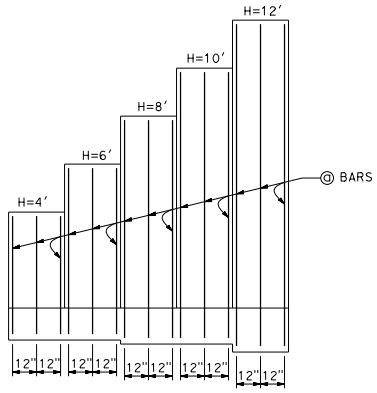

ELEVATION

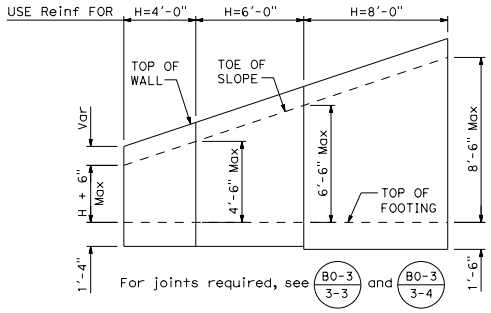

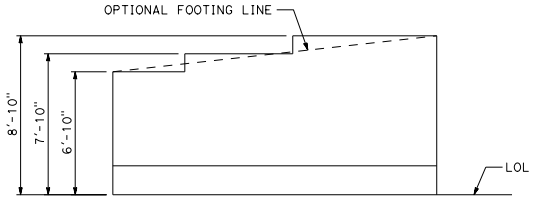

TYPICAL LAYOUT EXAMPLE

TABLE OF REINFORCING STEEL, DIMENSIONS AND DATA					
DESIGN H	4'	6'	8'	10'	12'
W	6'-10"	7'-10"	8'-10"	9'-10"	11'-0"
F SPREAD FOOTING	1'-4"	1'-4"	1'-6"	1'-6"	1'-10"
BATTER	NONE	NONE	⅜:12	½:12	⅝:12
ⓐ BARS	#5 @ 12	#6 @ 12	#7 @ 12	#8 @ 12	#9 @ 12
ⓑ BARS	#5 @ 6	#5 @ 6	#6 @ 6	#7 @ 6	#8 @ 6
Ser: B', q_o'	4.1, 1.5	6.8, 1.5	7.4, 2.0	8.0, 2.4	8.7, 3.0
Str: B', q_o	2.4, 2.8	2.7, 3.6	3.0, 4.6	3.3, 5.4	3.8, 6.2
Ext I: B', q_o	5.3, 2.3	4.8, 2.9	4.8, 3.9	5.0, 4.9	5.2, 6.2

NOTES:

1. At ⓐ bars:
   H ≤ 6', no splices are allowed within 1'-8" above the top of footing.
   H > 6', no splices are allowed within H/4 above the top of footing.

2. Non-contact lap splice length. Maximum transverse spacing of spliced rebars to be 3".

DESIGN CONDITIONS:

Design H may be exceeded by 6" before going to the next size. Special footing design is required where foundation material is incapable of supporting bearing stress listed in the table.

DESIGN NOTES:

DESIGN: AASHTO LRFD Bridge Design Specifications, 8th Edition with California Amendments, Preface dated April 2019.

LS: Variable live load surcharge on level ground surface

DC: Stem Architectural Treatment of thickness up to 2" of concrete (25 psf) considered

SEISMIC: $k_h = 0.2$, $k_v = 0.0$

SOIL BACKFILL: $\phi = 34°$, $\gamma = 120$ pcf

SOIL FOR BASE FRICTION: $\phi = 32°$, $\gamma = 120$ pcf

REINFORCED CONCRETE: f'c = 3,600 psi, fy = 60,000 psi

LOAD COMBINATIONS AND LIMIT STATES:

Service I	Q = 1.00DC+1.00EV+1.00EH+1.00LS
Strength I	Q = αDC+β̂EV+ηEH+1.75LS
Extreme I	Q = 1.00DC+1.00EV+1.00EH+1.00EQD+1.00EQE

Where:

Q:	Force Effects
α:	1.25 or 0.90, Whichever Controls Design
β̂:	1.35 or 1.00, Whichever Controls Design
η:	1.50 or 0.90, Whichever Controls Design
DC:	Dead Load of Structure Components
EH:	Horizontal Earth Fill Pressure
EV:	Vertical Earth Pressure from Earth Fill Weight
LS:	Live Load Surcharge
EQE:	Seismic Earth Pressure
EQD:	Soil and Structural and Nonstructural Components Inertia

SYMBOLS:

Ser - service limit state I
Str - strength limit state I
Ext I - extreme event limit state I
B' - effective footing width (ft)
q_o' - net bearing stress (ksf), OG assumed to be FG at toe
q_o - gross uniform bearing stress (ksf)

STATE OF CALIFORNIA
DEPARTMENT OF TRANSPORTATION

RETAINING WALL TYPE 5 (CASE 2)

NO SCALE

B3-4B

2026 STANDARD PLAN B3-4B

7-1-26

Return to Table of Contents

Dist	COUNTY	ROUTE	POST MILES TOTAL PROJECT	SHEET No.	TOTAL SHEETS

REGISTERED CIVIL ENGINEER

September 18, 2026

PLANS APPROVAL DATE

REGISTERED PROFESSIONAL ENGINEER Gary Wang No. C58298 Exp. 6-30-28 CIVIL STATE OF CALIFORNIA

THE STATE OF CALIFORNIA OR ITS OFFICERS OR AGENTS SHALL NOT BE RESPONSIBLE FOR THE ACCURACY OR COMPLETENESS OF SCANNED COPIES OF THIS PLAN SHEET.

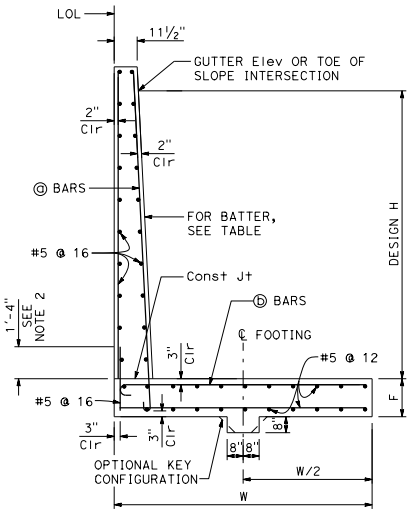

SPREAD FOOTING SECTION

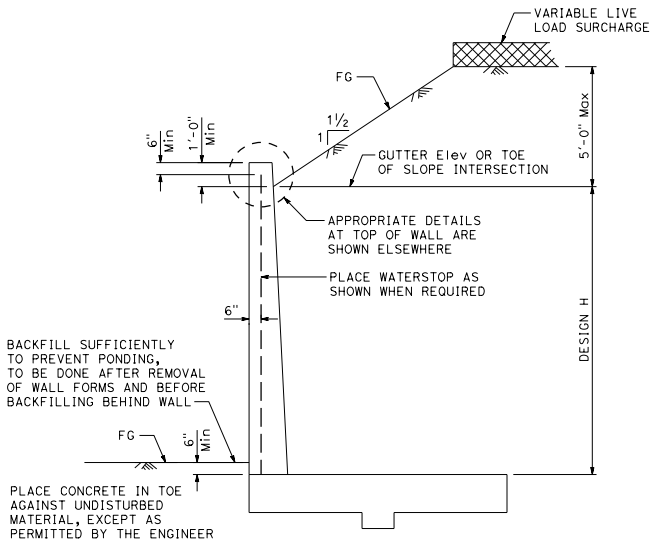

DESIGN SECTION

For drainage notes and other details, see B3-5

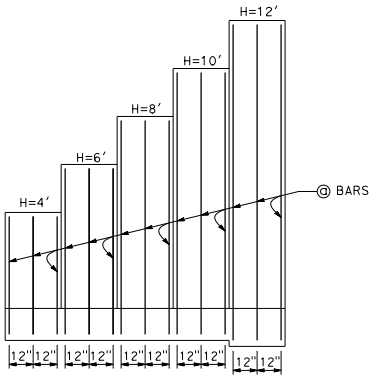

ELEVATION

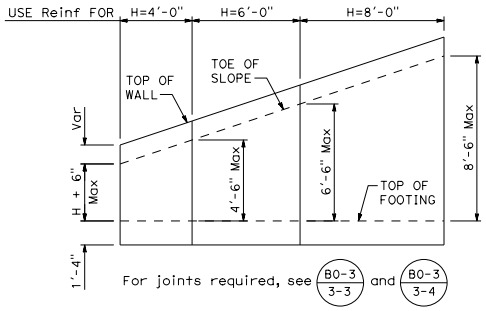

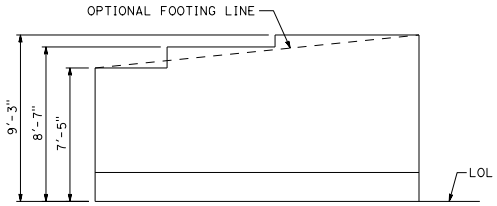

TYPICAL LAYOUT EXAMPLE

TABLE OF REINFORCING STEEL, DIMENSIONS AND DATA					
DESIGN H	4'	6'	8'	10'	12'
W	7'-5"	8'-7"	9'-3"	10'-0"	10'-9"
F SPREAD FOOTING	1'-4"	1'-4"	1'-4"	1'-4"	1'-7"
BATTER	NONE	⅜:12	⅜:12	⅝:12	⅝:12
ⓐ BARS	#5 @ 12	#5 @ 12	#5 @ 12	#6 @ 12	#7 @ 12
ⓑ BARS	#5 @ 6	#6 @ 6	#7 @ 6	#8 @ 6	#8 @ 6
Ser: B', q_o'	4.5, 1.6	5.2, 2.1	5.7, 2.5	6.2, 3.0	6.3, 3.6
Str: B', q_o	2.5, 3.1	3.0, 3.8	3.2, 4.7	3.5, 5.3	3.9, 6.0
Ext I: B', q_o	4.8, 1.8	5.1, 2.6	4.9, 3.5	4.8, 4.5	4.7, 5.9

NOTES:

1. At ⓐ bars:
   H ≤ 6', no splices are allowed within 1'-8" above the top of footing.
   H > 6', no splices are allowed within H/4 above the top of footing.

2. Non-contact lap splice length. Maximum transverse spacing of spliced rebars to be 3".

DESIGN CONDITIONS:

Design H may be exceeded by 6" before going to the next size. Special footing design is required where foundation material is incapable of supporting bearing stress listed in the table.

DESIGN NOTES:

DESIGN: AASHTO LRFD Bridge Design Specifications, 8th Edition with California Amendments, Preface dated April 2019.

LS: Variable live load surcharge on level ground surface

DC: Stem Architectural Treatment of thickness up to 2" of concrete (25 psf) considered

SEISMIC: $k_h = 0.2$
$k_v = 0.0$

SOIL BACKFILL: ø = 34°, γ = 120 pcf
SOIL FOR BASE FRICTION: ø = 32°, γ = 120 pcf

REINFORCED CONCRETE: f'c = 3,600 psi
fy = 60,000 psi

LOAD COMBINATIONS AND LIMIT STATES:

Service I	Q = 1.00DC+1.00EV+1.00EH+1.00LS
Strength I	Q = αDC+β̂EV+ηEH+1.75LS
Extreme I	Q = 1.00DC+1.00EV+1.00EH+1.00EQD+1.00EQE

Where:

Q:	Force Effects
α:	1.25 or 0.90, Whichever Controls Design
β̂:	1.35 or 1.00, Whichever Controls Design
η:	1.50 or 0.90, Whichever Controls Design
DC:	Dead Load of Structure Components
EH:	Horizontal Earth Fill Pressure
EV:	Vertical Earth Pressure from Earth Fill Weight
LS:	Live Load Surcharge
EQE:	Seismic Earth Pressure
EQD:	Soil and Structural and Nonstructural Components Inertia

SYMBOLS:

Ser - service limit state I
Str - strength limit state I
Ext I - extreme event limit state I
B' - effective footing width (ft)
q_o' - net bearing stress (ksf), OG assumed to be FG at toe
q_o - gross uniform bearing stress (ksf)

STATE OF CALIFORNIA
DEPARTMENT OF TRANSPORTATION

RETAINING WALL TYPE 5 (CASE 3)

NO SCALE

B3-4C

2026 STANDARD PLAN B3-4C

7-1-26

Return to Table of Contents

Dist	COUNTY	ROUTE	POST MILES TOTAL PROJECT	SHEET No.	TOTAL SHEETS

REGISTERED CIVIL ENGINEER

September 18, 2026

PLANS APPROVAL DATE

Gary Wang No. C58298 Exp. 6-30-28 CIVIL STATE OF CALIFORNIA

THE STATE OF CALIFORNIA OR ITS OFFICERS OR AGENTS SHALL NOT BE RESPONSIBLE FOR THE ACCURACY OR COMPLETENESS OF SCANNED COPIES OF THIS PLAN SHEET.

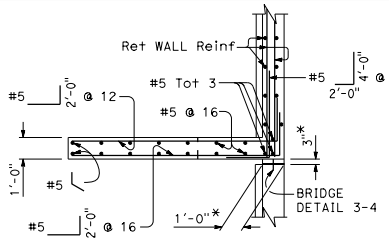

PLAN

* Omit when Bridge Detail 3-4 is not required.

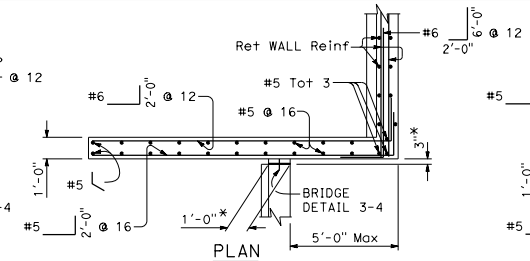

PLAN

* Omit when Bridge Detail 3-4 is not required.

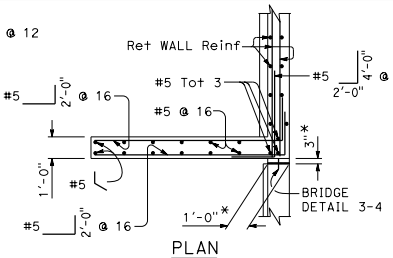

PLAN

* Omit when Bridge Detail 3-4 is not required.

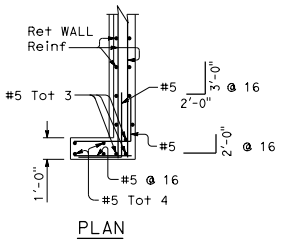

PLAN

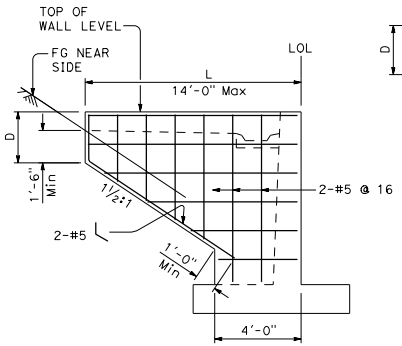

ELEVATION

RETURN WALL TYPE "A"

Use where H = 8' or less

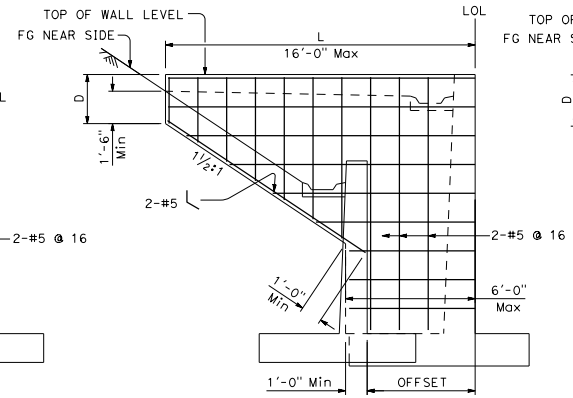

ELEVATION

RETURN WALL TYPE "B"

Use where H = 10' or more on offset walls

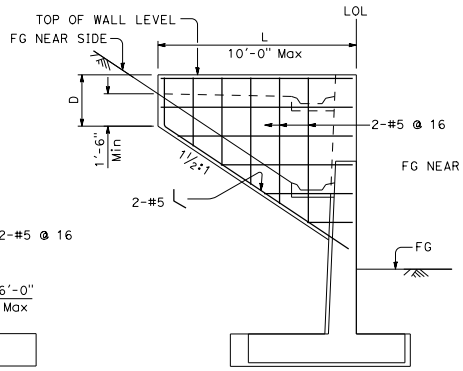

ELEVATION

RETURN WALL TYPE "C"

Use where H = 10' or more on straight walls

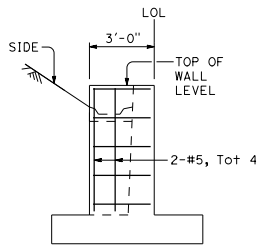

ELEVATION

RETURN WALL TYPE "D"

Use where H = 6' or less

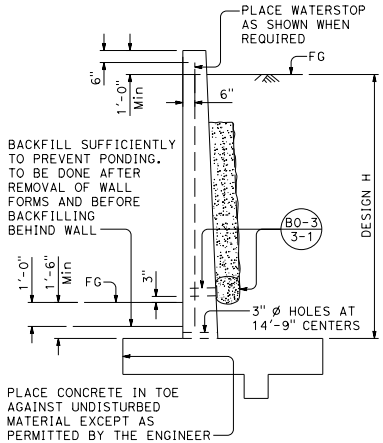

DESIGN AND DRAINAGE

DESIGN CONDITIONS:

Design "H" may be exceeded by 6" before going to the next size. Special footing design is required where foundation material is incapable of supporting bearing stress listed in table.

Return wall not required unless shown elsewhere.

DESIGN NOTES:

DESIGN: AASHTO LRFD Bridge Design Specifications, 4th edition with California Amendments

LIVE LOAD: Surcharge on level ground surface

SOIL: ø = 34°
γ = 120 pcf

REINFORCED CONCRETE: f'c = 3,600 psi
fy = 60,000 psi

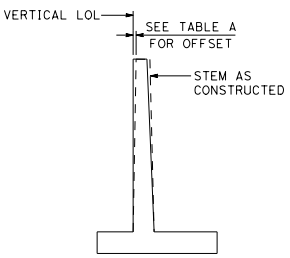

APPROXIMATE WALL OFFSET VALUES

Values for offseting forms to be determined by the Engineer.

TABLE A	
H	OFFSET
4'-0" TO 12'-0"	H/200
14'-0" TO 16'-0"	H/160
18'-0" TO 20'-0"	H/140
22'-0" TO 24'-0"	H/130
26'-0" TO 36'-0"	2½"

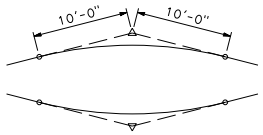

20'-0" VC AT TOP OF WALL SLOPE CHANGE

Where shown on the plans

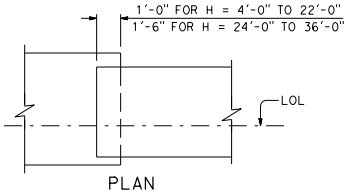

PLAN

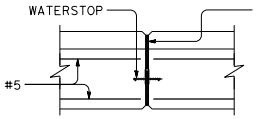

PLAN OF WALL WITH BRIDGE DETAIL 3-4

SEE B0-3 / 3-4

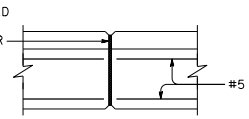

PLAN OF WALL WITH EXPANSION JOINT ONLY

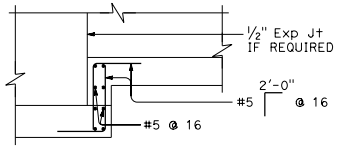

ELEVATION

FOOTING STEP

STATE OF CALIFORNIA
DEPARTMENT OF TRANSPORTATION

RETAINING WALL DETAILS No. 1

NO SCALE

B3-5

2026 STANDARD PLAN B3-5

7-1-26

Return to Table of Contents

Dist	COUNTY	ROUTE	POST MILES TOTAL PROJECT	SHEET No.	TOTAL SHEETS

REGISTERED CIVIL ENGINEER

September 18, 2026
PLANS APPROVAL DATE

REGISTERED PROFESSIONAL ENGINEER Gary Wang No. C58298 Exp. 6-30-28 CIVIL STATE OF CALIFORNIA

THE STATE OF CALIFORNIA OR ITS OFFICERS OR AGENTS SHALL NOT BE RESPONSIBLE FOR THE ACCURACY OR COMPLETENESS OF SCANNED COPIES OF THIS PLAN SHEET.

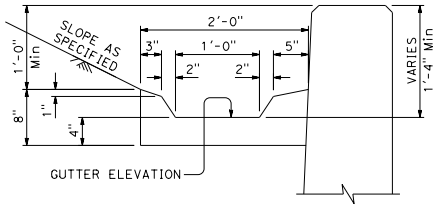

TYPICAL GUTTER DETAIL

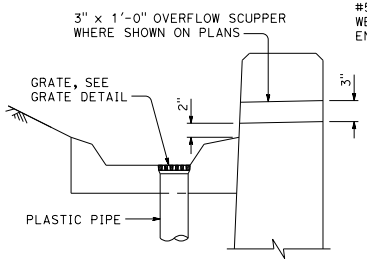

WALL DRAIN DETAIL

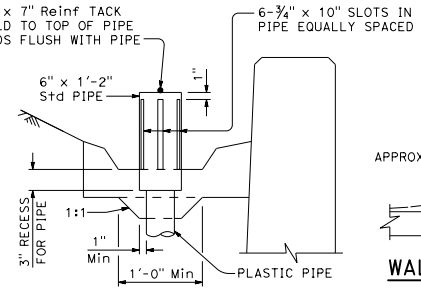

WALL DRAIN WITH PIPE DOME

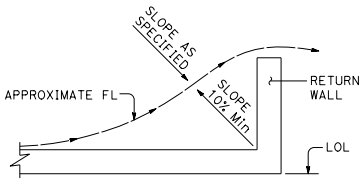

WALL DRAINAGE WHERE GUTTER NOT REQUIRED

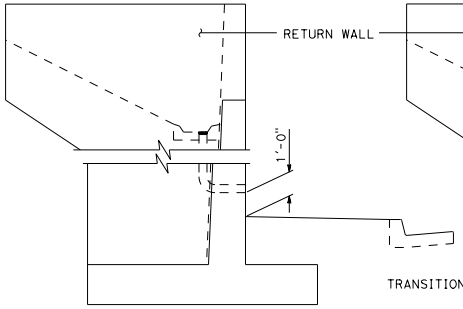

RETAINING WALL
FACE OF WALL OUTLET

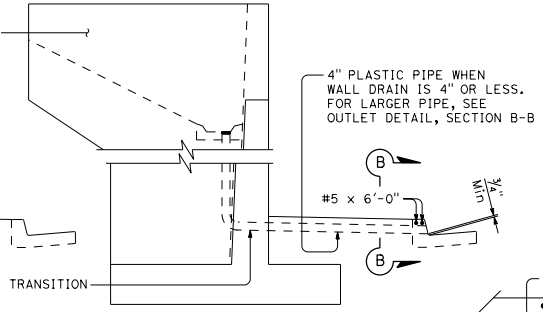

RETAINING WALL
GUTTER OUTLET

GRATE DETAIL

Sizes to fit standard hubs

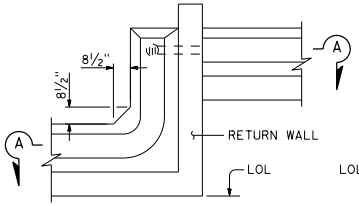

PLAN
OFFSET WALL

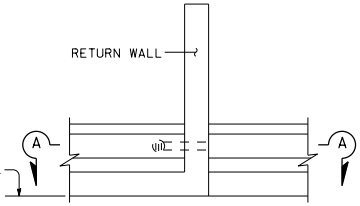

PLAN
CONTINUOUS WALL

DRAIN THROUGH RETURN WALL

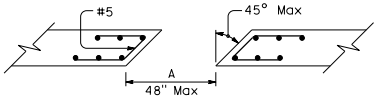

PLAN

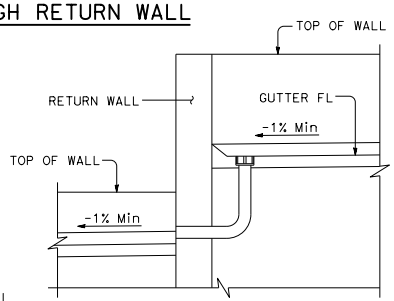

SECTION A-A

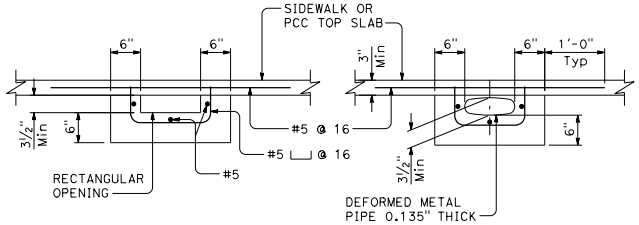

SECTION B-B

OUTLET DETAIL

NOTE:
Area of opening to be not less than that of pipe from wall gutter. Make opening transition in wall. Edge opening in curb face to ¾" minimum radius.

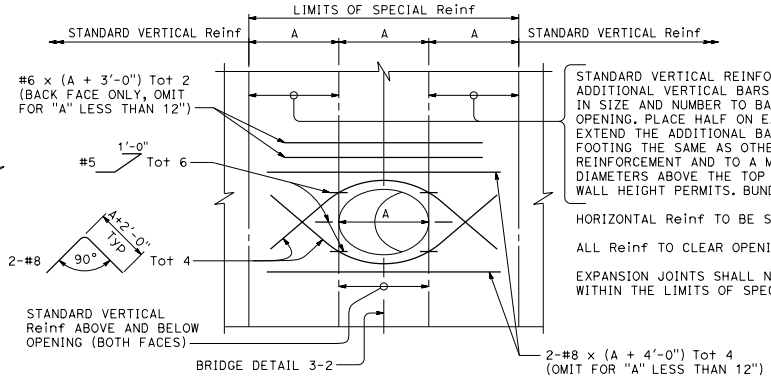

STANDARD VERTICAL REINFORCEMENT PLUS ADDITIONAL VERTICAL BARS CORRESPONDING IN SIZE AND NUMBER TO BARS CUT BY THE OPENING. PLACE HALF ON EACH SIDE. EXTEND THE ADDITIONAL BARS INTO THE FOOTING THE SAME AS OTHER VERTICAL WALL REINFORCEMENT AND TO A MINIMUM OF 60 BAR DIAMETERS ABOVE THE TOP OF UTILITY OPENING IF WALL HEIGHT PERMITS. BUNDLE BARS AS REQUIRED.

HORIZONTAL Reinf TO BE STANDARD EXCEPT AS SHOWN.

ALL Reinf TO CLEAR OPENING BY 2" MINIMUM.

EXPANSION JOINTS SHALL NOT BE LOCATED WITHIN THE LIMITS OF SPECIAL REINFORCING

ELEVATION

RETAINING WALL UTILITY OPENING

Max size of opening (A) = 48"
To be used in conjunction with sheet B3-5

STATE OF CALIFORNIA
DEPARTMENT OF TRANSPORTATION

RETAINING WALL DETAILS No. 2

NO SCALE

B3-6

2026 STANDARD PLAN B3-6

7-1-26

Return to Table of Contents

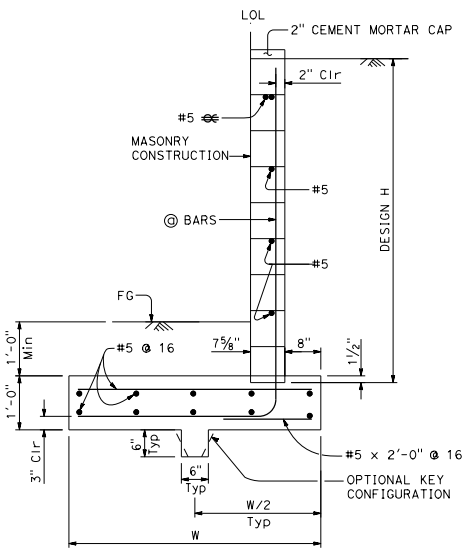

TYPE 6A WALL

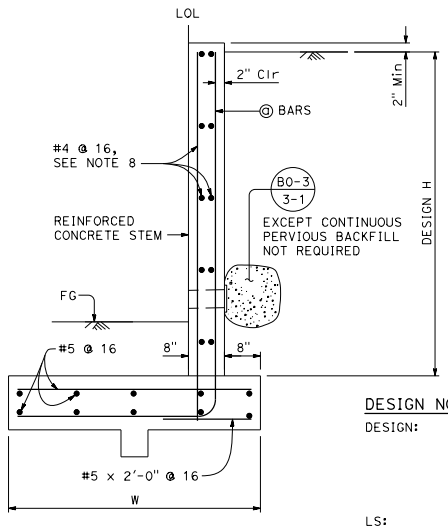

TYPE 6A WALL - TABLE OF REINFORCING STEEL, DIMENSIONS AND DATA					
DESIGN H	3'-4"	4'-0"	4'-8"	5'-4"	6'-0"
W	3'-2"	3'-6"	3'-10"	4'-2"	4'-6"
@ BARS	#5 @ 16	#5 @ 16	#5 @ 16	#5 @ 16	#5 @ 16
Ser: B', q_o'	3.1, 0.2	3.4, 0.2	3.6, 0.3	3.8, 0.3	4.0, 0.3
Str: B', q_o	3.0, 0.6	3.2, 0.6	3.4, 0.7	3.6, 0.7	3.0, 0.7
Ext I: B', q_o	2.6, 0.6	2.8, 0.6	3.1, 0.7	3.4, 0.7	3.7, 0.7

TYPE 6B WALL - TABLE OF REINFORCING STEEL, DIMENSIONS AND DATA					
DESIGN H	3'-4"	4'-0"	4'-8"	5'-4"	6'-0"
W	2'-8"	3'-0"	3'-4"	4'-2"	4'-6"
@ BARS	#5 @ 16	#5 @ 16	#5 @ 16	#5 @ 16	#5 @ 16
ⓔ BARS	#5 @ 16	#5 @ 16	#5 @ 16	#5 @ 16	#6 @ 16
Ser: B', q_o'	2.2, 0.4	2.5, 0.5	2.7, 0.6	2.7, 0.9	2.9, 1.1
Str: B', q_o	2.2, 0.8	2.4, 1.0	2.6, 1.1	1.5, 2.0	1.6, 2.2
Ext I: B', q_o	1.5, 1.0	1.7, 1.2	1.8, 1.4	2.5, 1.4	2.6, 1.6

Dist	COUNTY	ROUTE	POST MILES TOTAL PROJECT	SHEET No.	TOTAL SHEETS

REGISTERED CIVIL ENGINEER

September 18, 2026
PLANS APPROVAL DATE

REGISTERED PROFESSIONAL ENGINEER Gary Wang No. C58298 Exp. 6-30-28 CIVIL STATE OF CALIFORNIA

THE STATE OF CALIFORNIA OR ITS OFFICERS OR AGENTS SHALL NOT BE RESPONSIBLE FOR THE ACCURACY OR COMPLETENESS OF SCANNED COPIES OF THIS PLAN SHEET.

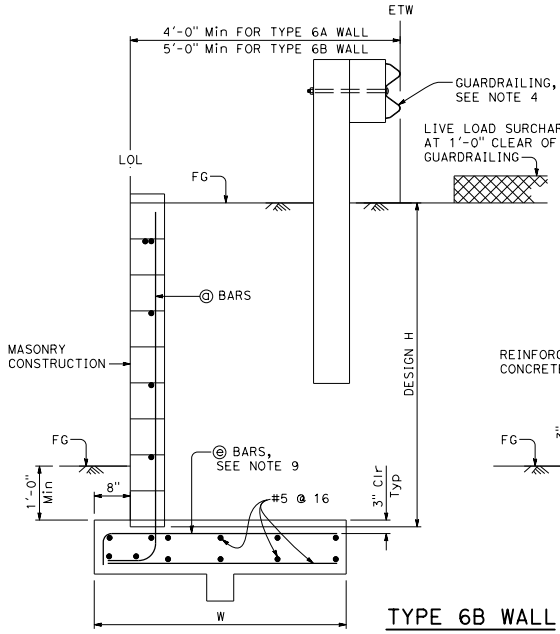

TYPE 6B WALL

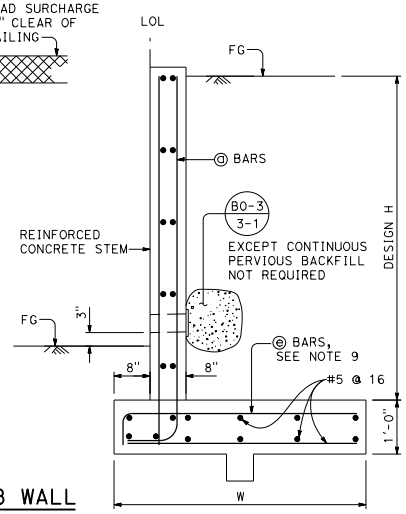

DESIGN NOTES:

DESIGN: AASHTO LRFD Bridge Design Specifications, 8th Edition with California Amendments, Preface dated April 2019.

Building Code Requirements and Specification for Masonry Structures (TMS 402/602-16)

LS: 240 psf live load surcharge on level ground surface as limited by guardrailing location

SEISMIC: $k_h = 0.2$
$k_v = 0.0$

SOIL BACKFILL: $\phi = 34°$, $\gamma = 120$ pcf

SOIL FOR BASE FRICTION: $\phi = 32°$, $\gamma = 120$ pcf

REINFORCED CONCRETE: $f'c = 3{,}600$ psi
$fy = 60{,}000$ psi

REINFORCED MASONRY: $fm' = 1{,}500$ psi
$fy = 60{,}000$ psi

LOAD COMBINATIONS AND LIMIT STATES:

Service I: $Q = 1.00DC+1.00EV+1.00EH+1.00LS$
Strength I: $Q = \alpha DC+\beta EV+\eta EH+1.75LS$
Extreme I: $Q = 1.00DC+1.00EV+1.00EH+1.00EQD+1.00EQE$

Where:
- Q: Force Effects
- α: 1.25 or 0.90, Whichever Controls Design
- β: 1.35 or 1.00, Whichever Controls Design
- η: 1.50 or 0.90, Whichever Controls Design
- DC: Dead Load of Structure Components
- EH: Horizontal Earth Fill Pressure
- EV: Vertical Earth Pressure from Earth Fill Weight
- LS: Live Load Surcharge
- EQE: Seismic Earth Pressure
- EQD: Soil and Structural and Nonstructural Components Inertia

SYMBOLS:

Ser - service limit state I
Str - strength limit state I
Ext I - extreme event limit state I
B' - effective footing width (ft)
q_o' - net bearing stress (ksf), OG assumed to be FG at toe
q_o - gross uniform bearing stress (ksf)

NOTES:

1. For details not shown at "6B", see "6A". Similarly, for details not shown at "6A", see "6B".
2. Design loading for both Type "6A" and "6B" is as shown at "6B".
3. Type 6 retaining wall shall be limited to use for walls of Design H of 6'-0" or less.
4. Where traffic is adjacent to the top of wall, guardrailing should be set back from the top front face of wall at least 4'-0" or 5'-0", dependent on wall type.
5. For reinforced concrete wall stem joint details, see B0-3/3-3 and B0-3/3-4.
6. No splices are allowed on @ bars.
7. See Standard Plan B3-7C for Elevation View and Footing Step Details.
8. Contractor must verify minimum spacing requirements for the horizontal stem reinforcement based on maximum aggregate size for the concrete mix being used. Horizontal stem reinforcement may be staggered by up to 2".
9. Hook of ⓔ bar should be rotated to maintain minimum bottom clearance of 3" or replaced with a 180 degree hook.

STATE OF CALIFORNIA
DEPARTMENT OF TRANSPORTATION

RETAINING WALL TYPE 6 (CASE 1)

NO SCALE

B3-7A

7-1-26

2026 STANDARD PLAN B3-7A

Return to Table of Contents

Dist	COUNTY	ROUTE	POST MILES TOTAL PROJECT	SHEET No.	TOTAL SHEETS

REGISTERED CIVIL ENGINEER

September 18, 2026

PLANS APPROVAL DATE

REGISTERED PROFESSIONAL ENGINEER Gary Wang No. C58298 Exp. 6-30-28 CIVIL STATE OF CALIFORNIA

THE STATE OF CALIFORNIA OR ITS OFFICERS OR AGENTS SHALL NOT BE RESPONSIBLE FOR THE ACCURACY OR COMPLETENESS OF SCANNED COPIES OF THIS PLAN SHEET.

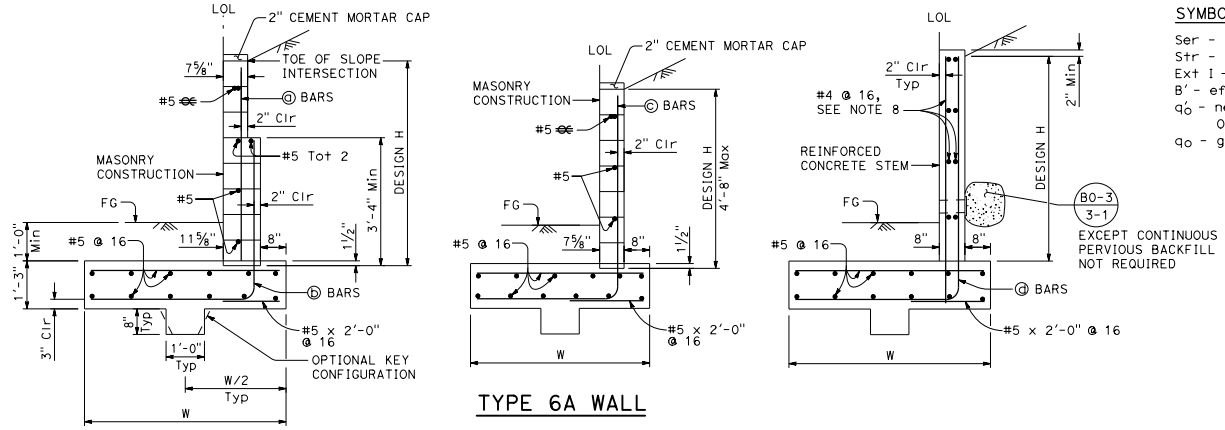

TYPE 6A WALL

SYMBOLS:

Ser - service limit state 1
Str - strength limit state 1
Ext I - extreme event limit state I
B′ - effective footing width (ft)
q_o' - net bearing stress (ksf), OG assumed to be FG at toe
q_o - gross uniform bearing stress (ksf)

NOTES:

1. For details not shown at "6B", see "6A". Similarly, for details not shown at "6A", see "6B".
2. Design loading for both Type "6A" and "6B" is as shown at "6B".
3. Type 6 retaining wall shall be limited to use for walls of Design H of 6′-0″ or less.
4. Where traffic is adjacent to the top of wall, guardrailing should be set back from the top front face of wall at least 4′-0″ or 6′-0″, dependent on wall type.
5. For reinforced concrete wall stem joint details, see BO-3 3-3 and BO-3 3-4 .
6. No splices are allowed on ⓐ, ⓑ, ⓒ, and ⓓ bars.
7. See Standard Plan B3-7C for Elevation View and Footing Step Details.
8. Contractor must verify minimum spacing requirements for the horizontal stem reinforcement based on maximum aggregate size for the concrete mix being used. Horizontal stem reinforcement may be staggered by up to 2".
9. Hook of ⓔ bar should be rotated to maintain minimum bottom clearance of 3" or replaced with a 180 degree hook.

TYPE 6A WALL - TABLE OF REINFORCING STEEL, DIMENSIONS AND DATA

DESIGN H	3′-4″	4′-0″	4′-8″	5′-4″	6′-0″
W	3′-2″	3′-6″	3′-10″	4′-2″	4′-6″
ⓐ BARS	NONE	NONE	NONE	#5 @ 16	#5 @ 16
ⓑ BARS	NONE	NONE	NONE	#5 @ 16	#5 @ 16
ⓒ BARS	#5 @ 16	#5 @ 16	#6 @ 16	NONE	NONE
ⓓ BARS	#5 @ 16	#5 @ 16	#5 @ 16	#5 @ 16	#6 @ 16
Ser: B′, q_o'	3.1, 0.3	3.5, 0.3	3.8, 0.4	4.0, 0.4	4.3, 0.4
Str: B′, q_o	3.1, 0.8	3.4, 0.8	3.6, 0.9	3.9, 0.9	4.1, 1.0
Ext I: B′, q_o	2.1, 2.0	2.3, 2.0	2.5, 2.0	2.8, 1.9	3.0, 1.9

TYPE 6B WALL - TABLE OF REINFORCING STEEL, DIMENSIONS AND DATA

DESIGN H	3′-4″	4′-0″	4′-8″	5′-4″	6′-0″
W	3′-0″	3′-4″	4′-0″	5′-6″	5′-11″
ⓐ BARS	NONE	NONE	NONE	#5 @ 16	#5 @ 16
ⓑ BARS	NONE	NONE	NONE	#5 @ 8	#5 @ 8
ⓒ BARS	#5 @ 16	#5 @ 16	#6 @ 16	NONE	NONE
ⓓ BARS	#5 @ 16	#5 @ 16	#6 @ 16	#5 @ 8	#5 @ 8
ⓔ BARS	#5 @ 16	#5 @ 16	#5 @ 16	#6 @ 16	#5 @ 8
Ser: B′, q_o'	2.6, 0.6	2.8, 0.7	3.5, 0.8	3.5, 1.1	5.4, 1.0
Str: B′, q_o	2.2, 1.1	1.8, 1.2	2.9, 1.4	1.9, 2.5	2.0, 2.8
Ext I: B′, q_o	1.4, 3.3	1.5, 3.6	2.1, 3.2	3.8, 2.5	4.0, 2.8

DESIGN NOTES:

DESIGN: AASHTO LRFD Bridge Design Specifications, 8th Edition with California Amendments, Preface dated April 2019.
Building Code Requirements and Specification for Masonry Structures (TMS 402/602-16)

LS: 240 psf live load surcharge on level ground surface as limited by guardrailing location

SEISMIC: $k_h = 0.2$, $k_v = 0.0$

SOIL BACKFILL: $\phi = 34°$, $\gamma = 120$ pcf

SOIL FOR BASE FRICTION: $\phi = 32°$, $\gamma = 120$ pcf

REINFORCED CONCRETE: f′c = 3,600 psi, fy = 60,000 psi

REINFORCED MASONRY: fm′ = 1,500 psi, fy = 60,000 psi

LOAD COMBINATIONS AND LIMIT STATES:

Service I: $Q = 1.00DC+1.00EV+1.00EH+1.00LS$
Strength I: $Q = \alpha DC+\beta EV+\eta EH+1.75LS$
Extreme I: $Q = 1.00DC+1.00EV+1.00EH+1.00EQD+1.00EQE$

Where:
- Q: Force Effects
- α: 1.25 or 0.90, Whichever Controls Design
- β: 1.35 or 1.00, Whichever Controls Design
- η: 1.50 or 0.90, Whichever Controls Design
- DC: Dead Load of Structure Components
- EH: Horizontal Earth Fill Pressure
- EV: Vertical Earth Pressure from Earth Fill Weight
- LS: Live Load Surcharge
- EQE: Seismic Earth Pressure
- EQD: Soil and Structural and Nonstructural Components Inertia

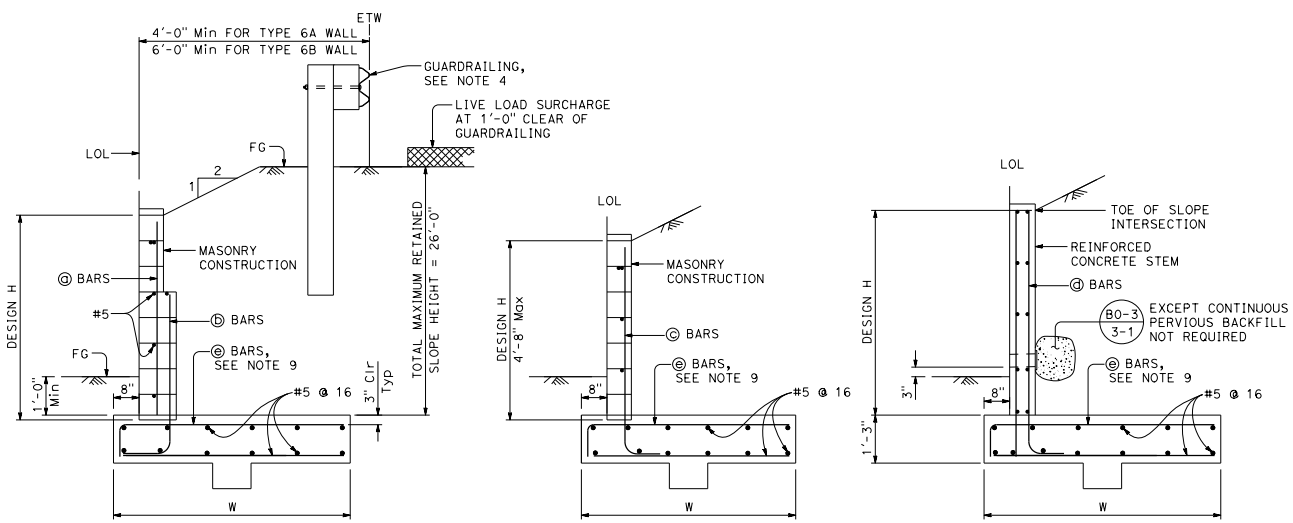

TYPE 6B WALL

STATE OF CALIFORNIA
DEPARTMENT OF TRANSPORTATION

RETAINING WALL TYPE 6 (CASE 2)

NO SCALE

B3-7B

2026 STANDARD PLAN B3-7B

7-1-26

Return to Table of Contents

Dist	COUNTY	ROUTE	POST MILES TOTAL PROJECT	SHEET No.	TOTAL SHEETS

REGISTERED CIVIL ENGINEER

September 18, 2026
PLANS APPROVAL DATE

REGISTERED PROFESSIONAL ENGINEER
Gary Wang
No. C58298
Exp. 6-30-28
CIVIL
STATE OF CALIFORNIA

THE STATE OF CALIFORNIA OR ITS OFFICERS OR AGENTS SHALL NOT BE RESPONSIBLE FOR THE ACCURACY OR COMPLETENESS OF SCANNED COPIES OF THIS PLAN SHEET.

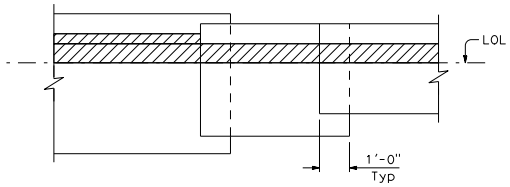

PLAN

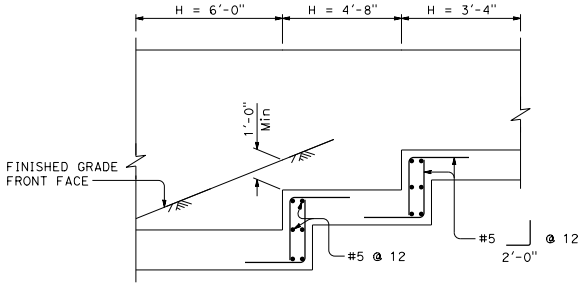

ELEVATION

FOOTING STEP DETAILS

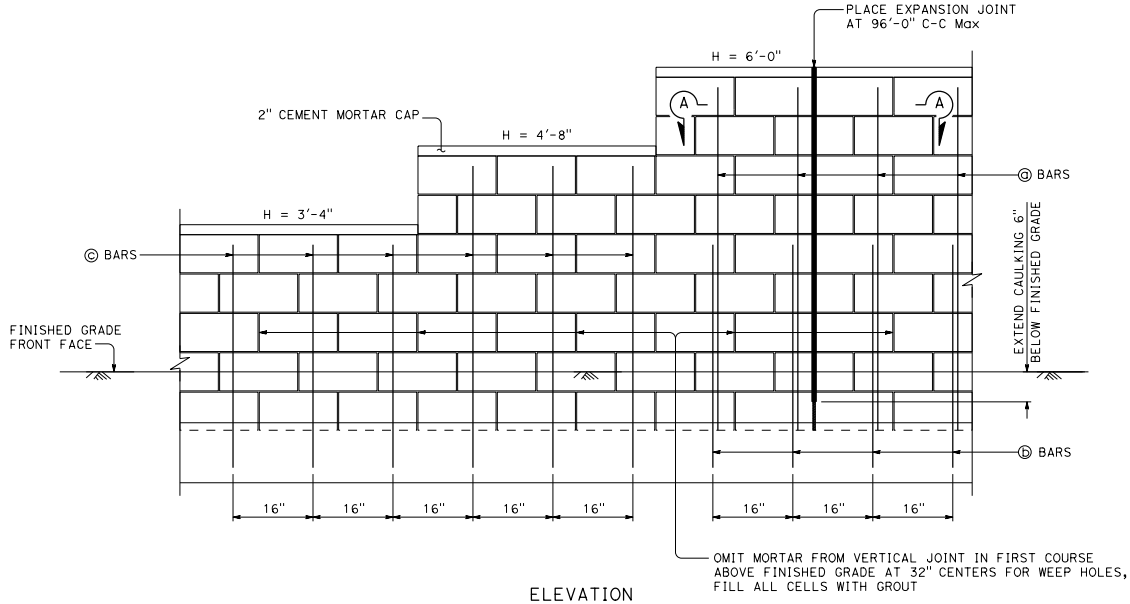

ELEVATION

MASONRY CONSTRUCTION

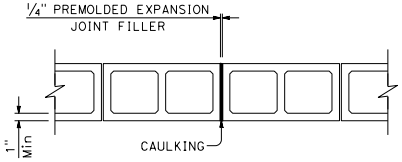

SECTION A-A

STATE OF CALIFORNIA
DEPARTMENT OF TRANSPORTATION

RETAINING WALL TYPE 6 DETAILS

NO SCALE

B3-7C

2026 STANDARD PLAN B3-7C

7-1-26

Return to Table of Contents

Dist	COUNTY	ROUTE	POST MILES TOTAL PROJECT	SHEET No.	TOTAL SHEETS

Peter W. Norboe
REGISTERED CIVIL ENGINEER

September 18, 2026
PLANS APPROVAL DATE

REGISTERED PROFESSIONAL ENGINEER
Peter W. Norboe
No. C57519
Exp. 12-31-27
CIVIL
STATE OF CALIFORNIA

THE STATE OF CALIFORNIA OR ITS OFFICERS OR AGENTS SHALL NOT BE RESPONSIBLE FOR THE ACCURACY OR COMPLETENESS OF SCANNED COPIES OF THIS PLAN SHEET.

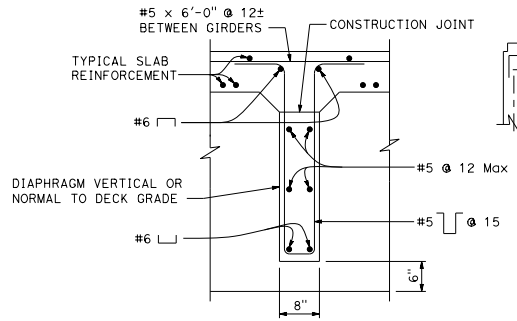

DETAIL D-1
INTERMEDIATE DIAPHRAGM SECTION

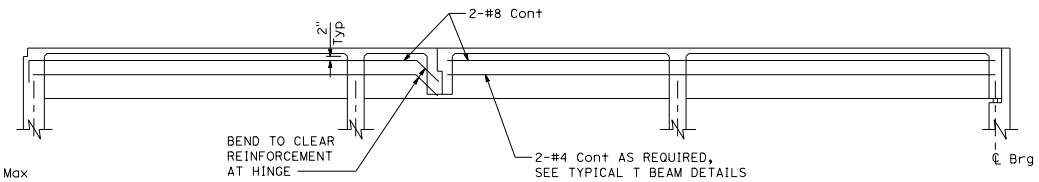

DETAIL J-1
GIRDER WEB REINFORCEMENT

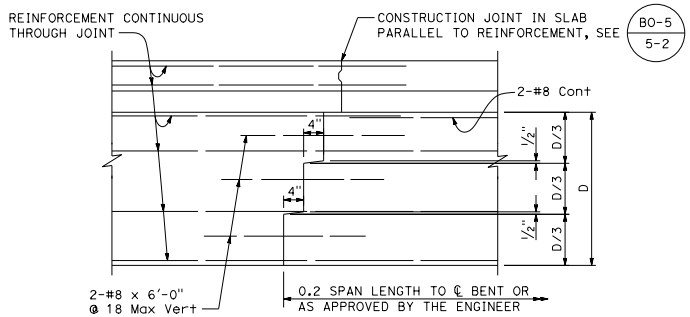

DETAIL J-3
TRANSVERSE GIRDER CONSTRUCTION JOINTS

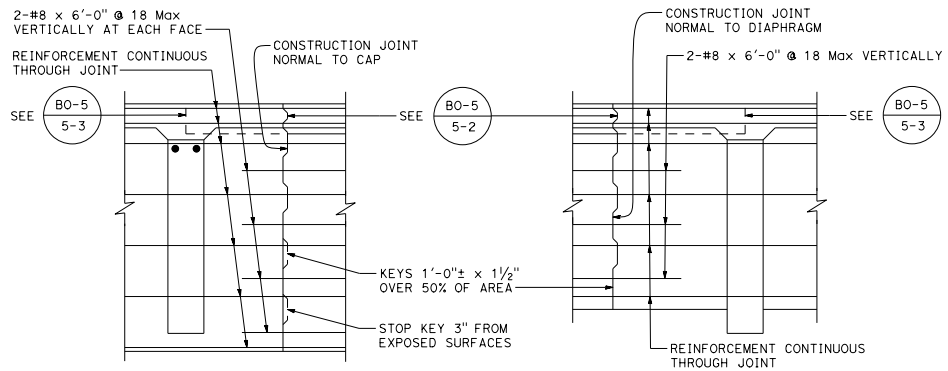

BENT CAP

DIAPHRAGMS

DETAIL J-4
LONGITUDINAL CONSTRUCTION JOINTS

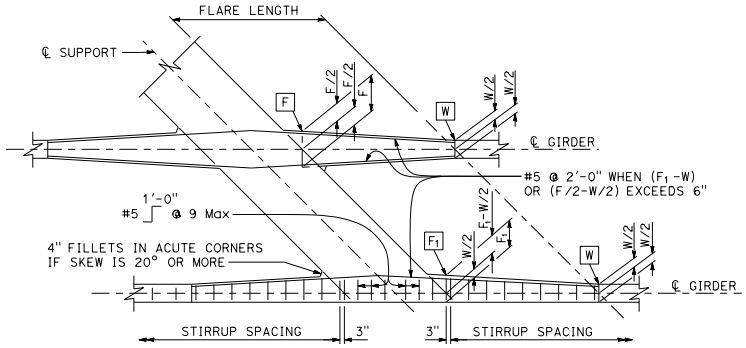

DETAIL S-3
TYPICAL GIRDER FLARE AND STIRRUP SPACING DIAGRAM

W and F denote girder width in inches

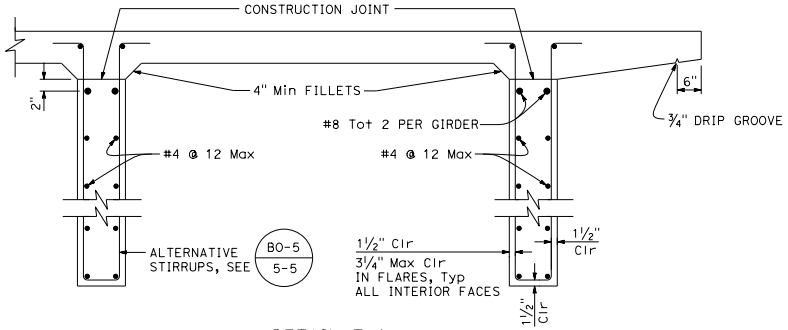

DETAIL T-1
TYPICAL T BEAM DETAILS

STATE OF CALIFORNIA
DEPARTMENT OF TRANSPORTATION
T-BEAM DETAILS
NO SCALE

B6-1

7-1-26

2026 STANDARD PLAN B6-1

Return to Table of Contents

Dist	COUNTY	ROUTE	POST MILES TOTAL PROJECT	SHEET No.	TOTAL SHEETS

Peter W. Norboe
REGISTERED CIVIL ENGINEER

September 18, 2026
PLANS APPROVAL DATE

REGISTERED PROFESSIONAL ENGINEER
Peter W. Norboe
No. C57519
Exp. 12-31-27
CIVIL
STATE OF CALIFORNIA

THE STATE OF CALIFORNIA OR ITS OFFICERS OR AGENTS SHALL NOT BE RESPONSIBLE FOR THE ACCURACY OR COMPLETENESS OF SCANNED COPIES OF THIS PLAN SHEET.

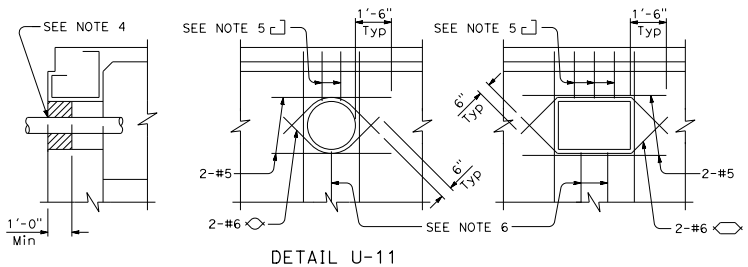

DETAIL U-11

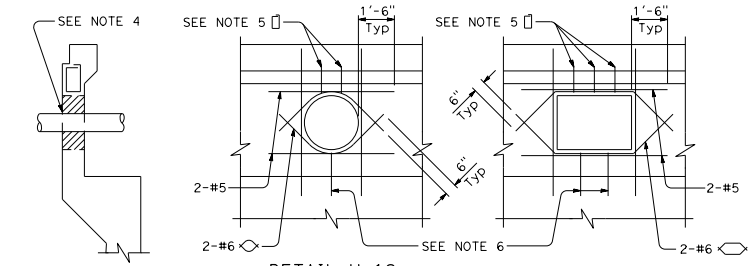

DETAIL U-12

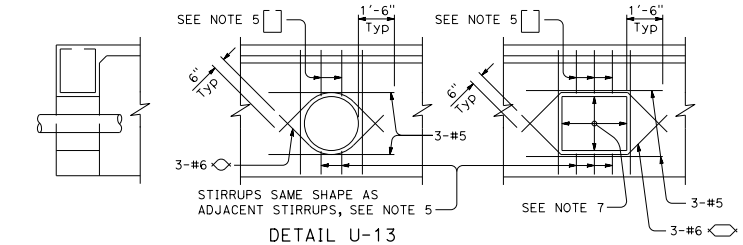

DETAIL U-13

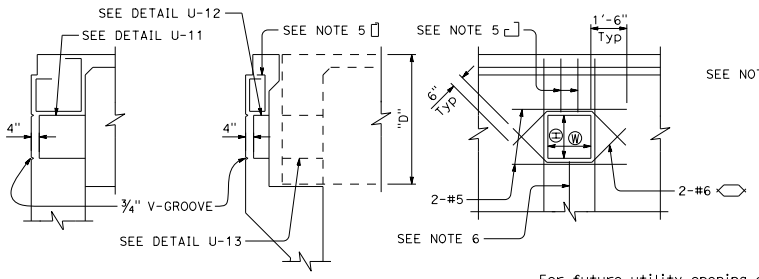

DETAIL U-14
For future utility opening

ABUTMENT DIAPHRAGMS
See Details U-11 thru U-14

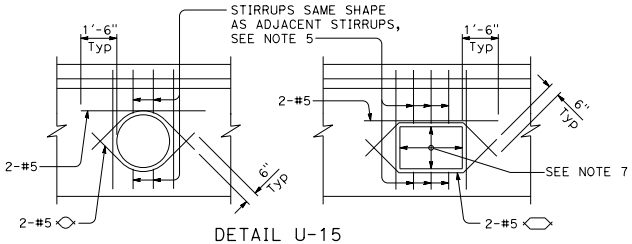

DETAIL U-15

INTERMEDIATE DIAPHRAGMS

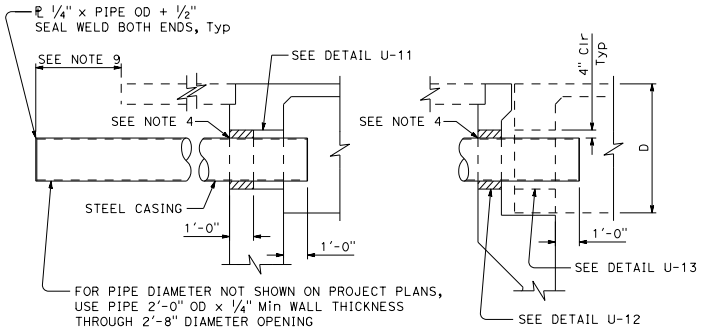

DETAIL U-16
For future utility provisions under approach slab

ABUTMENT DIAPHRAGMS

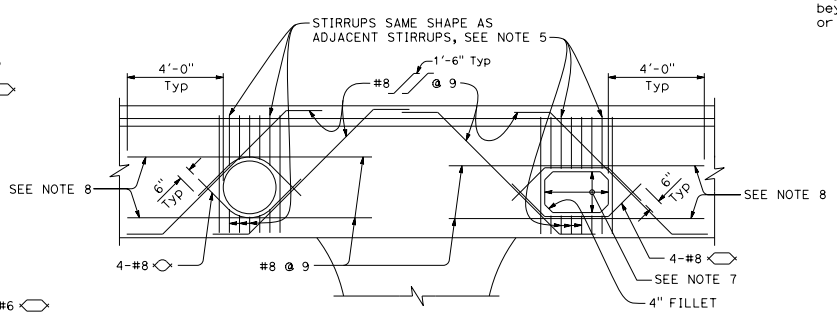

DETAIL U-17
Near or between columns

BENT CAPS

For future utility opening dimensions not shown on Project Plans use:
Ⓗ = 1/3 "D" or 1'-3" Min, whichever is greater.
Ⓦ = 1/3 "D" or 1'-3" Min, whichever is greater.

NOTES:

1. The exact location, elevation, size and direction of openings shall be in accordance with the Project Plans and as directed by the Engineer.
2. Girders not shown, see Project Plans.
3. All reinforcement detailed to be placed in addition to reinforcement shown on Project Plans.
4. Seal utilities at abutments with concrete or mortar, after tightly wrapping utility with 2 layers of 15 LBS building paper.
5. Reinforcement to be same bar size, and 2/3 the spacing of adjacent reinforcement shown on Project Plans.
6. Reinforcement to be same bar size and shape as adjacent reinforcement shown on Project Plans.
7. For future utility opening dimensions, see Project Plans and Detail U-14.
8. When there is insufficient space to place reinforcement as shown, hook reinforcement into exterior girder.
9. Unless otherwise shown on Project Plans, casing shall extend to the greater of 5'-0" beyond the end of the approach slab, 5'-0" beyond the end of the adjacent wingwall, or 20'-0" beyond the back of the abutment.

STATE OF CALIFORNIA
DEPARTMENT OF TRANSPORTATION

UTILITY OPENINGS T-BEAM

NO SCALE

B6-10

7-1-26

Return to Table of Contents

Dist	COUNTY	ROUTE	POST MILES TOTAL PROJECT	SHEET No.	TOTAL SHEETS

REGISTERED CIVIL ENGINEER

September 18, 2026

PLANS APPROVAL DATE

REGISTERED PROFESSIONAL ENGINEER Don Nguyen-Tan No. C57510 Exp. 12-31-27 CIVIL STATE OF CALIFORNIA

THE STATE OF CALIFORNIA OR ITS OFFICERS OR AGENTS SHALL NOT BE RESPONSIBLE FOR THE ACCURACY OR COMPLETENESS OF SCANNED COPIES OF THIS PLAN SHEET.

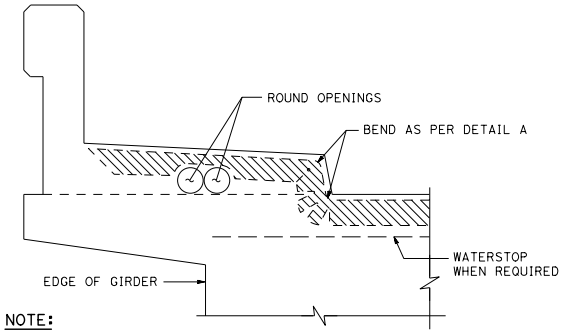

NOTE:
Type B seal shown. Type A seals to comform to the general path of seal shown, cuts for bending not required. Bend Type A seals 3" up into curb or barrier rail on only the low end of the seal.

CONCRETE BARRIER AND SIDEWALK

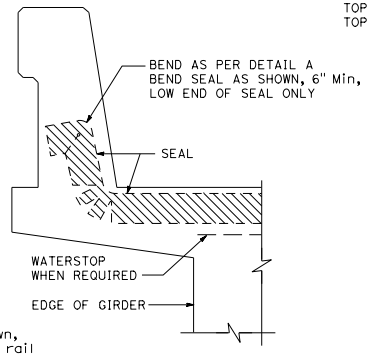

CONCRETE BARRIER

JOINT SEALS DETAILS

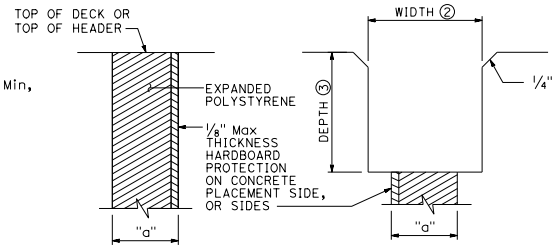

FORMING DETAIL

SAWCUT DETAIL

NOTE:
Verify all controlling field dimensions before ordering or fabricatiing any material.

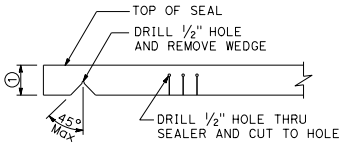

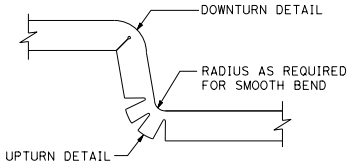

DETAIL A

NOTES:

① Make smooth cuts from the bottom of seal to 1½" clear of top leaving at least one complete cell between the top of the cut and top of the seal. When necessary cut back of seal to clear conduit and round openings.

② Sawcut groove widths shall be as ordered by the Engineer.

③ Depth of sawcut:
Type A - Depth to be 2" minimum.
Type B - Depth to be equal to or greater than the depth of seal measured along the contact surface, when compressed to minimum width position (W_2) plus dimensions shown.

④ MR (movement range) as shown on the Project Plans.

⑤ Other depths must be approved by the Engineer.

⑥ Cover sidewalk joint with cover plate. Cover plate details shown on the Project Plans.

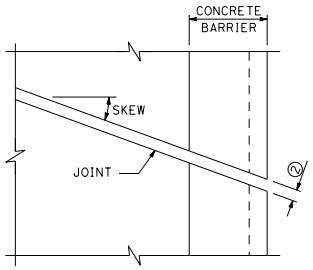

PLAN OF JOINT (SKEW ≤ 20°)

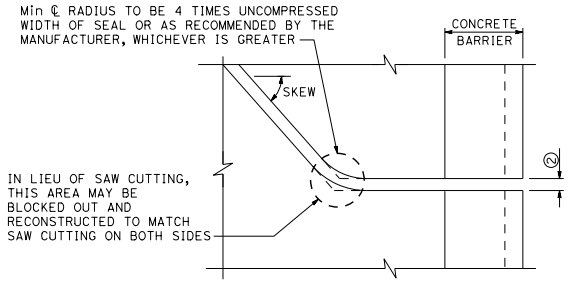

PLAN OF JOINT (SKEW > 20°)

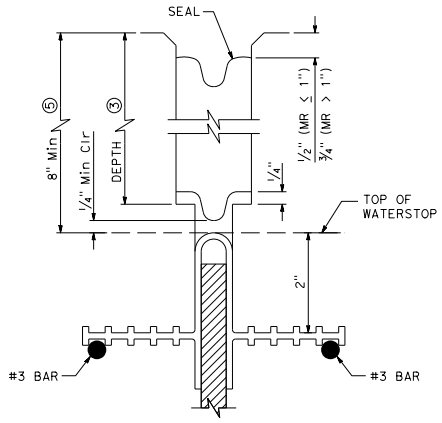

TYPE B JOINT SEAL
IN MINIMUM WIDTH POSITION (W_2)

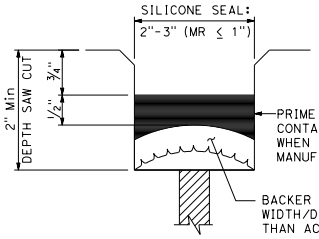

TYPE A SEAL
Movement range: Silicone = 1" Max

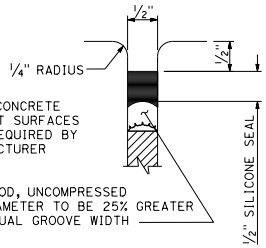

TYPE AL SEAL
Longitudinal joints only

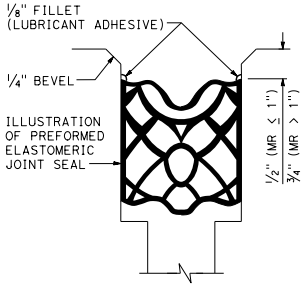

TYPE B SEAL
Movement range ≤ 2"

DIMENSIONS "a" OF JOINT REQUIRED

MOVEMENT RANGE (MR) ④	BRIDGE TYPE	"a" DIMENSION DECK CONCRETE PLACED		
		WINTER	FALL-SPRING	SUMMER
2"	ALL EXCEPT CIP/PS	1½"	1¼"	¾"
	CIP/PS	1¼"	1"	½"
1½"	ALL EXCEPT CIP/PS	1¼"	1"	½"
	CIP/PS	1"	¾"	½"
1"	ALL EXCEPT CIP/PS	1"	¾"	½"
	CIP/PS	¾"	½"	½"
½"	ALL EXCEPT CIP/PS	¾"	¾"	½"
	CIP/PS	½"	½"	½"

STATE OF CALIFORNIA
DEPARTMENT OF TRANSPORTATION

JOINT SEALS (MAXIMUM MOVEMENT RANGE = 2")

NO SCALE

B6-21

2026 STANDARD PLAN B6-21

7-1-26

Return to Table of Contents

Dist	COUNTY	ROUTE	POST MILES TOTAL PROJECT	SHEET No.	TOTAL SHEETS

Peter W. Norboe
REGISTERED CIVIL ENGINEER

September 18, 2026
PLANS APPROVAL DATE

REGISTERED PROFESSIONAL ENGINEER Peter W. Norboe No. C57519 Exp. 12-31-27 CIVIL STATE OF CALIFORNIA

THE STATE OF CALIFORNIA OR ITS OFFICERS OR AGENTS SHALL NOT BE RESPONSIBLE FOR THE ACCURACY OR COMPLETENESS OF SCANNED COPIES OF THIS PLAN SHEET.

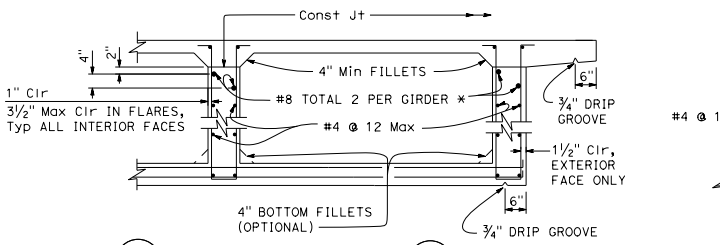

SEE BO-5 5-5 FOR ALTERNATIVE STIRRUPS. SEE B8-5 FOR PRESTRESSED GIRDER DETAILS.

TYPICAL BOX GIRDER DETAILS

DETAIL B-1

* At all web construction joints

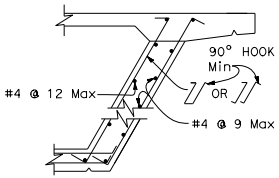

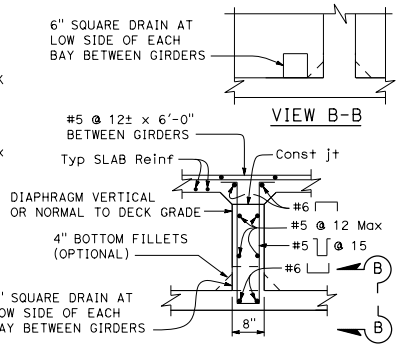

VIEW B-B

INTERMEDIATE DIAPHRAGM SECTION

DETAIL D-1

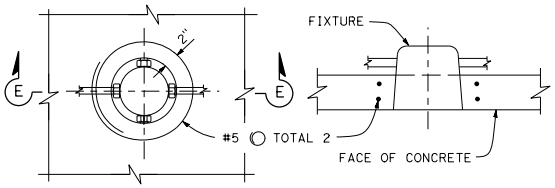

ADDED REINFORCEMENT

SECTION E-E

RECESSED SOFFIT LIGHT

DETAIL F-1

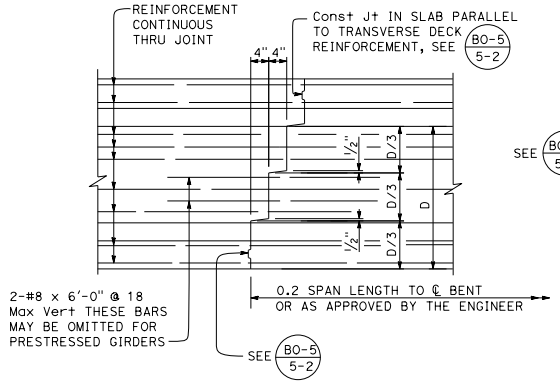

TRANSVERSE GIRDER CONSTRUCTION JOINTS

DETAIL J-3

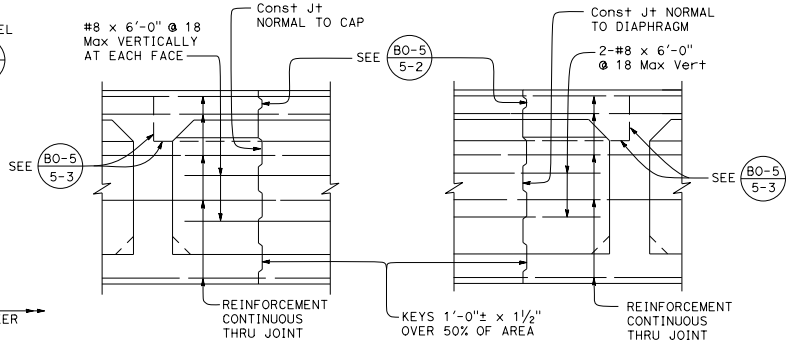

BENT CAP

DIAPHRAGMS

LONGITUDINAL CONSTRUCTION JOINTS

DETAIL J-4

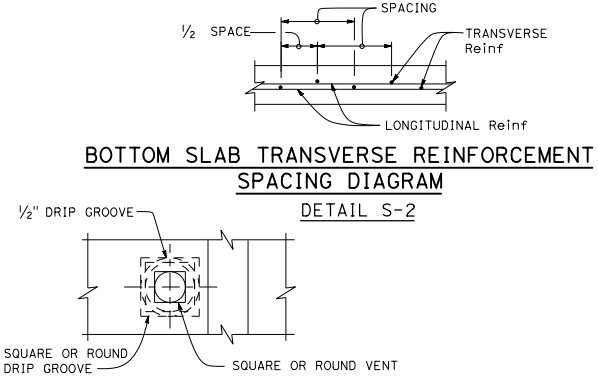

BOTTOM SLAB TRANSVERSE REINFORCEMENT SPACING DIAGRAM

DETAIL S-2

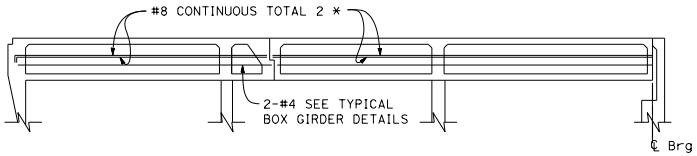

GIRDER WEB REINFORCEMENT

DETAIL J-1

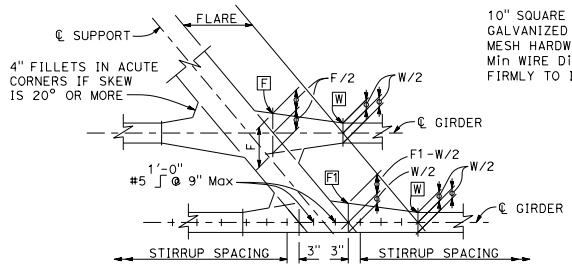

TYPICAL GIRDER FLARE AND STIRRUP SPACING DIAGRAM

DETAIL S-3

W and F denote girder width in inches.

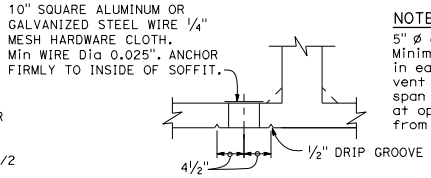

NOTE:
5" Ø or ⌀ vent in lower slab. Minimum of two vents per span in each bay between girders. One vent to be located at low point of span and other vent to be located at opposite end of span @ 1'-6" from face of abutment or bent.

VENT

DETAIL V-1

STATE OF CALIFORNIA
DEPARTMENT OF TRANSPORTATION

BOX GIRDER DETAILS

NO SCALE

B7-1

2026 STANDARD PLAN B7-1

7-1-26

Return to Table of Contents

Dist	COUNTY	ROUTE	POST MILES TOTAL PROJECT	SHEET No.	TOTAL SHEETS

REGISTERED CIVIL ENGINEER

September 18, 2026

PLANS APPROVAL DATE

REGISTERED PROFESSIONAL ENGINEER Don Nguyen-Tan No. C57510 Exp. 12-31-27 CIVIL STATE OF CALIFORNIA

THE STATE OF CALIFORNIA OR ITS OFFICERS OR AGENTS SHALL NOT BE RESPONSIBLE FOR THE ACCURACY OR COMPLETENESS OF SCANNED COPIES OF THIS PLAN SHEET.

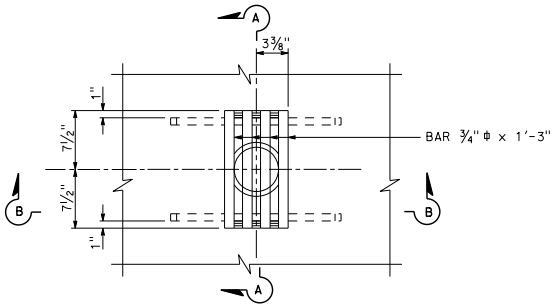

PLAN

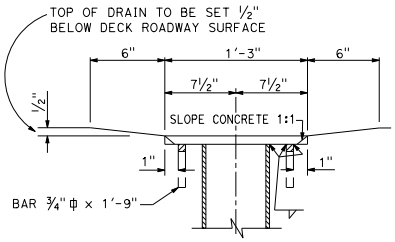

SECTION A-A

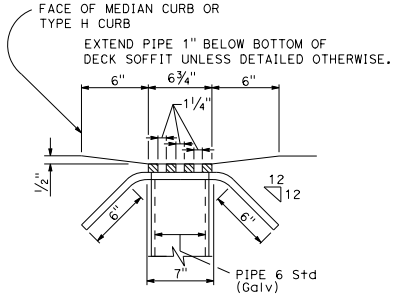

SECTION B-B

DRAIN - TYPE "A" DETAIL 7-1

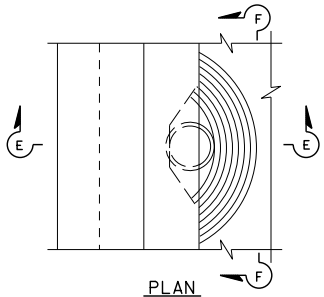

PLAN

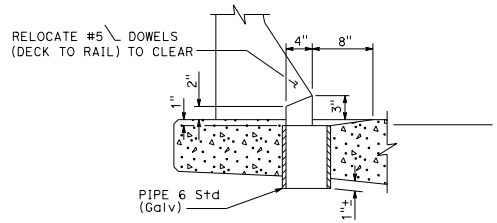

SECTION E-E

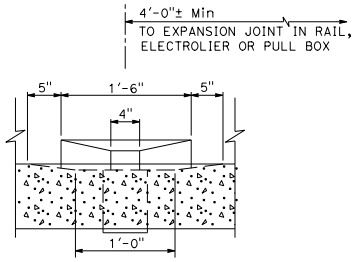

SECTION F-F

DRAIN - TYPE "B" DETAIL 7-3

For Type 25 barrier railing

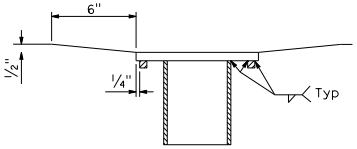

SECTION G-G

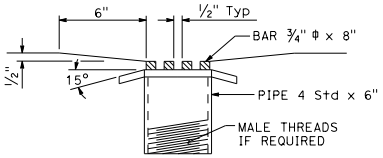

SECTION H-H

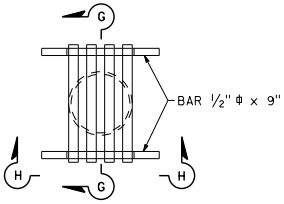

PLAN

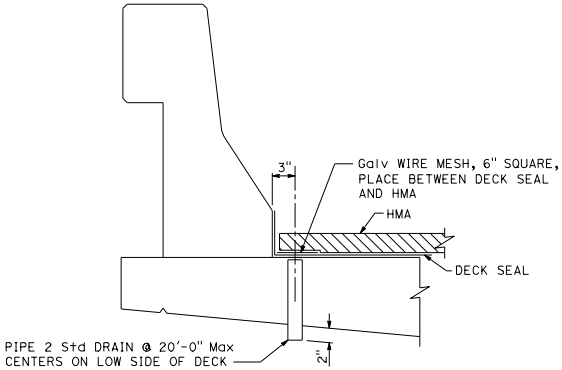

DECK BLEEDER DRAIN DETAIL 7-6

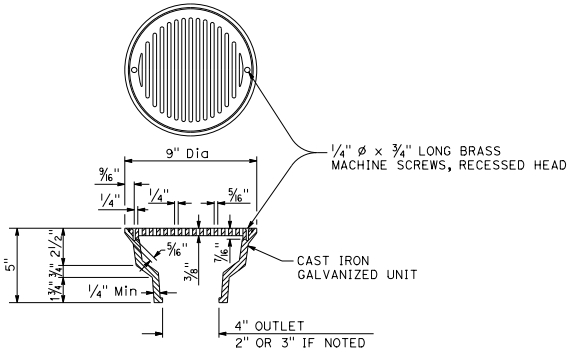

AREA DRAIN DETAIL 7-4

PEDESTRIAN STRUCTURE DRAIN DETAIL 7-5

STATE OF CALIFORNIA
DEPARTMENT OF TRANSPORTATION

DECK DRAINS

NO SCALE

B7-5

2026 STANDARD PLAN B7-5

7-1-26

Return to Table of Contents

Dist	COUNTY	ROUTE	POST MILES TOTAL PROJECT	SHEET No.	TOTAL SHEETS

REGISTERED CIVIL ENGINEER

September 18, 2026
PLANS APPROVAL DATE

REGISTERED PROFESSIONAL ENGINEER — Don Nguyen-Tan — No. C57510 — Exp. 12-31-27 — CIVIL — STATE OF CALIFORNIA

THE STATE OF CALIFORNIA OR ITS OFFICERS OR AGENTS SHALL NOT BE RESPONSIBLE FOR THE ACCURACY OR COMPLETENESS OF SCANNED COPIES OF THIS PLAN SHEET.

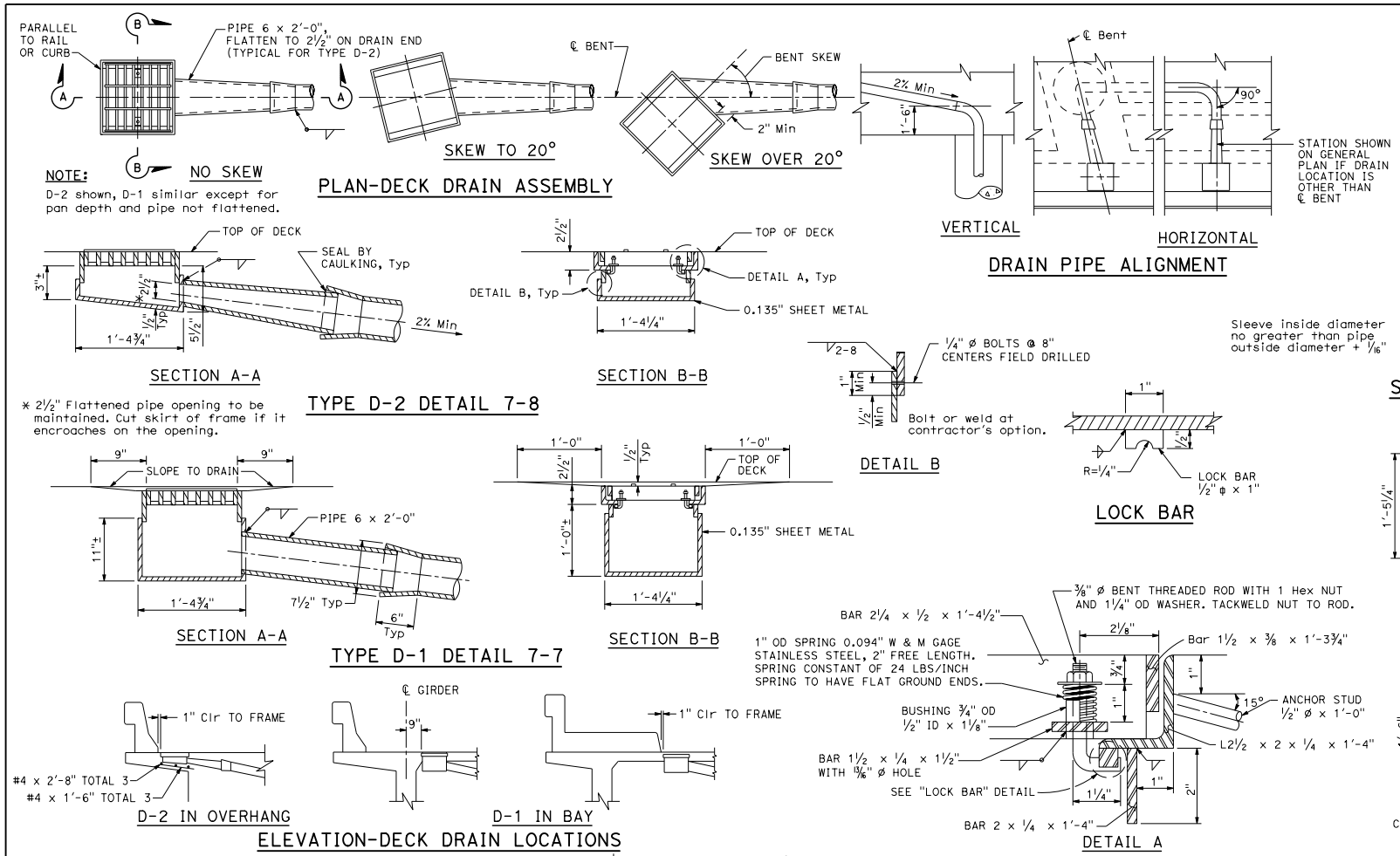

NOTE:

All pipe to be NPS 6 x 0.135" welded steel pipe except as noted and galvanized if not encased in concrete. Fittings and bends shall have a minimum wall thickness of ⅛". All joints or connections to be butt welded or connected by a steel pipe sleeve and to be smooth throughout inside of pipe except as noted. All bends to be on 1'-6" minimum radius measured along ℄ pipe. All bends to be smooth. Pipes not encased in concrete to be supported by suitable galvanized hangers @ 10'-0" maximum spacing throughout. Galvanize deck drain assembly after fabrication.

STATE OF CALIFORNIA
DEPARTMENT OF TRANSPORTATION

DECK DRAINS TYPES D-1 AND D-2

NO SCALE

B7-6

7-1-26

Return to Table of Contents

Dist	COUNTY	ROUTE	POST MILES TOTAL PROJECT	SHEET No.	TOTAL SHEETS

REGISTERED CIVIL ENGINEER

September 18, 2026
PLANS APPROVAL DATE

REGISTERED PROFESSIONAL ENGINEER
Don Nguyen-Tan
No. C57510
Exp. 12-31-27
CIVIL
STATE OF CALIFORNIA

THE STATE OF CALIFORNIA OR ITS OFFICERS OR AGENTS SHALL NOT BE RESPONSIBLE FOR THE ACCURACY OR COMPLETENESS OF SCANNED COPIES OF THIS PLAN SHEET.

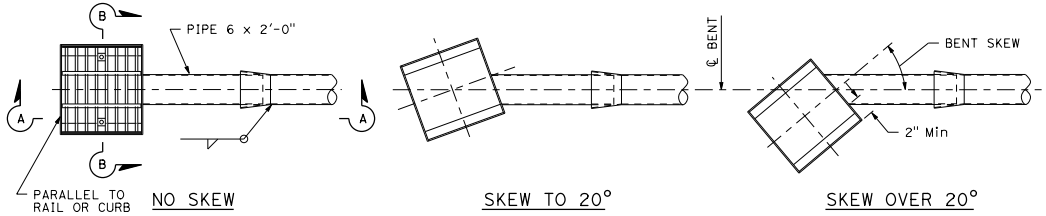

PLAN-DECK DRAIN ASSEMBLY

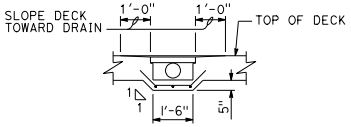

SECTION C-C

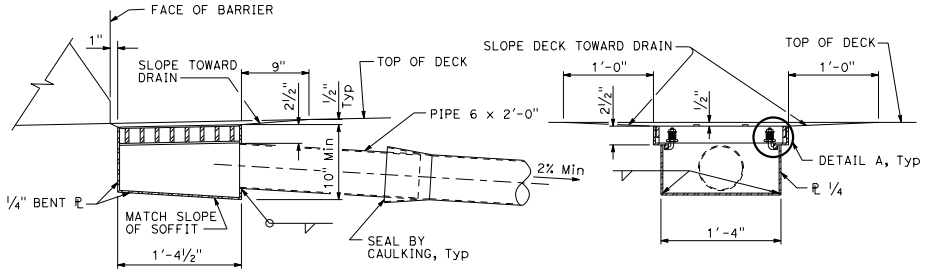

SECTION A-A SECTION B-B

DECK DRAIN ASSEMBLY DETAIL

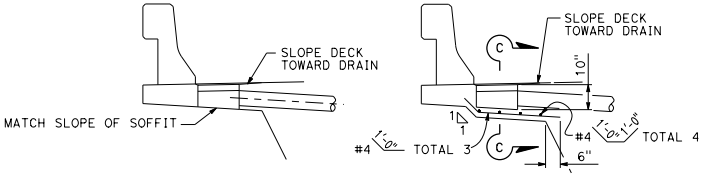

DETAIL 7-9
DRAIN FLUSH WITH OVERHANG

DETAIL 7-10
DRAIN WITH HAUNCHED OVERHANG

ELEVATION-DECK DRAIN LOCATIONS

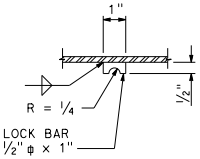

LOCK BAR

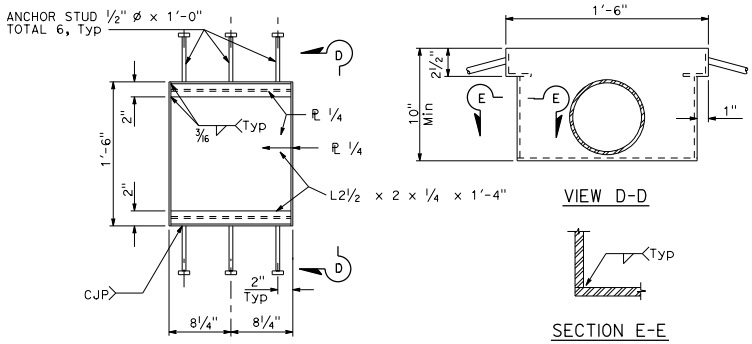

FRAME

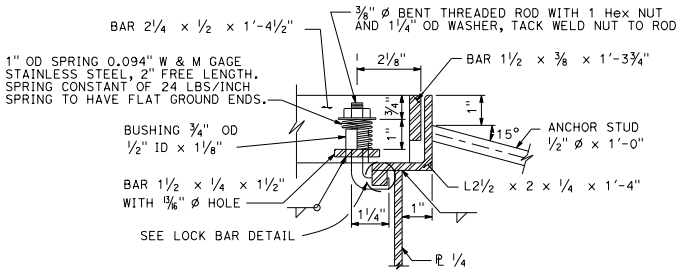

DETAIL A

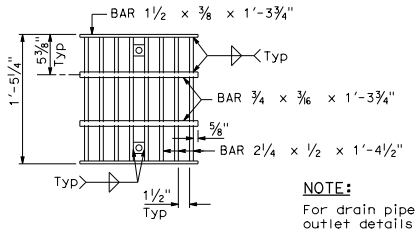

GRATE

NOTE:
For drain pipe alignment, sleeve connection, drain outlet details and notes, see Standard Plan B7-6.

STATE OF CALIFORNIA
DEPARTMENT OF TRANSPORTATION

DECK DRAIN TYPE D-3

NO SCALE

B7-7

7-1-26

2026 STANDARD PLAN B7-7

Return to Table of Contents

Dist	COUNTY	ROUTE	POST MILES TOTAL PROJECT	SHEET No.	TOTAL SHEETS

REGISTERED CIVIL ENGINEER

September 18, 2026

PLANS APPROVAL DATE

REGISTERED PROFESSIONAL ENGINEER Don Nguyen-Tan No. C57510 Exp. 12-31-27 CIVIL STATE OF CALIFORNIA

THE STATE OF CALIFORNIA OR ITS OFFICERS OR AGENTS SHALL NOT BE RESPONSIBLE FOR THE ACCURACY OR COMPLETENESS OF SCANNED COPIES OF THIS PLAN SHEET.

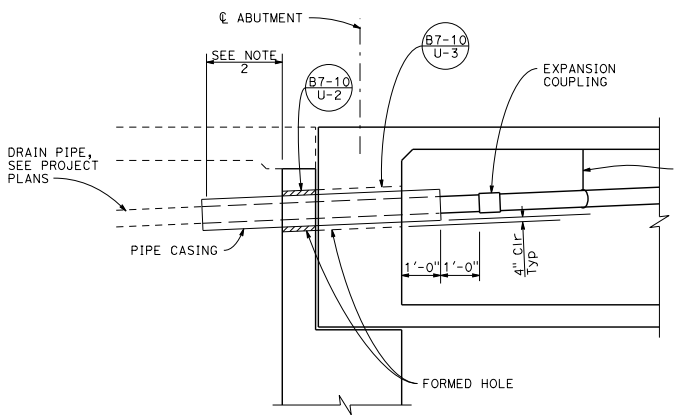

ABUTMENT

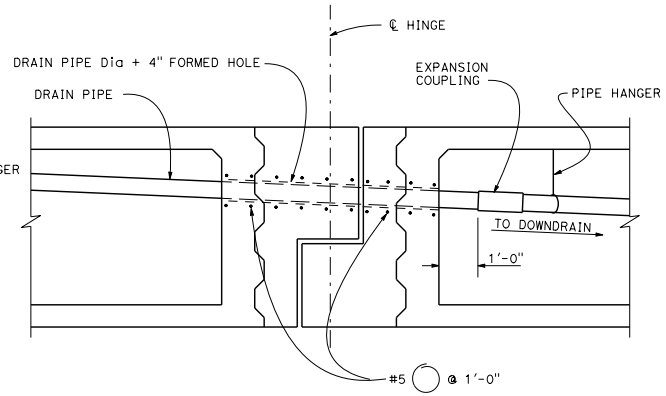

HINGE

DECK DRAIN PIPE DETAIL

NOTES:

1. Pipe casing OD = Drain pipe Dia + 4" (1/4" Min wall thickness).
2. Unless otherwise shown on Project Plans, casing shall extend to the greater of 5'-0" beyond the end of approach slab or 20'-0" beyond the back of abutment.

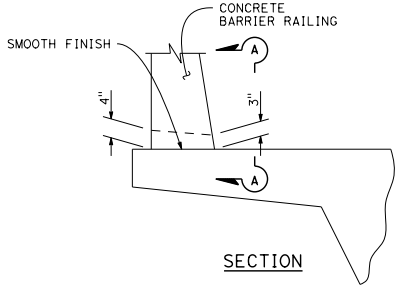

SECTION

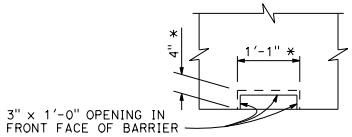

ELEVATION A-A

SCUPPER DETAIL

* At exterior face of barrier

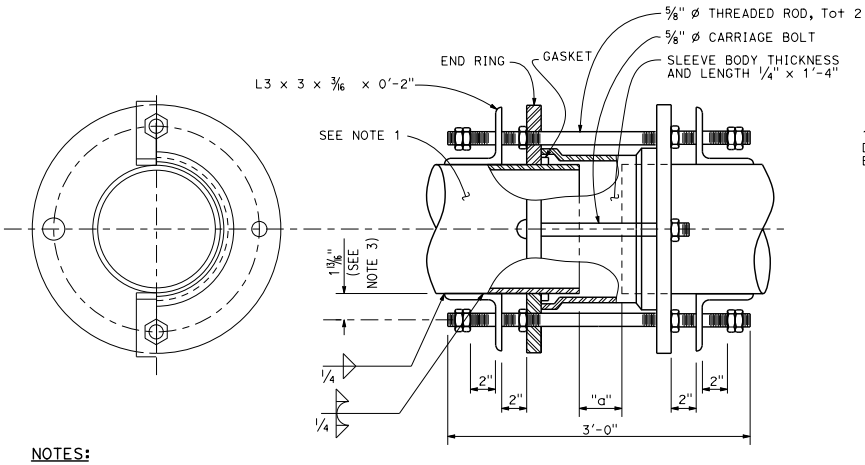

NOTES:

1. For "a" dimension and pipe diameter, see Project Plans.
2. Expansion coupling with 4 bolts shown. Coupling with a greater number of bolts allowed.
3. Adjust dimension to suit coupler end ring bolt circle.

EXPANSION COUPLING

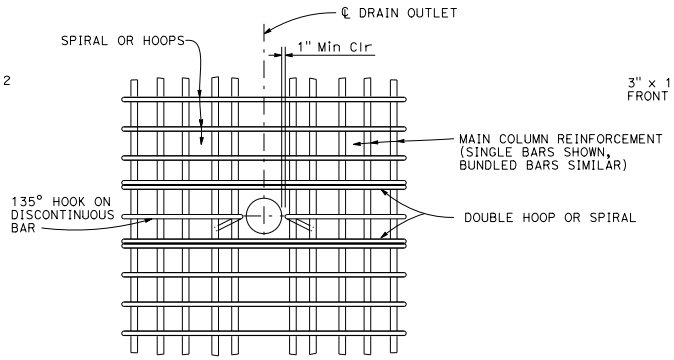

NOTE:

Adjust spacing of main column reinforcement to clear drain outlet.

COLUMN REINFORCEMENT AT DRAIN OUTLET

STATE OF CALIFORNIA
DEPARTMENT OF TRANSPORTATION

DECK DRAINAGE DETAILS

NO SCALE

B7-8

2026 STANDARD PLAN B7-8

7-1-26

Return to Table of Contents

Dist	COUNTY	ROUTE	POST MILES TOTAL PROJECT	SHEET No.	TOTAL SHEETS

Peter W. Norboe
REGISTERED CIVIL ENGINEER

September 18, 2026
PLANS APPROVAL DATE

REGISTERED PROFESSIONAL ENGINEER Peter W. Norboe No. C57519 Exp. 12-31-27 CIVIL STATE OF CALIFORNIA

THE STATE OF CALIFORNIA OR ITS OFFICERS OR AGENTS SHALL NOT BE RESPONSIBLE FOR THE ACCURACY OR COMPLETENESS OF SCANNED COPIES OF THIS PLAN SHEET.

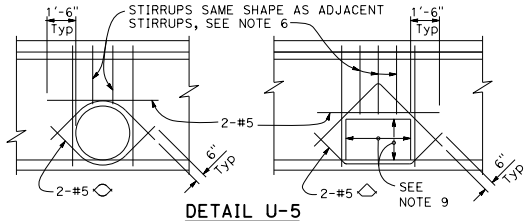

DETAIL U-5
At intermediate diaphragm

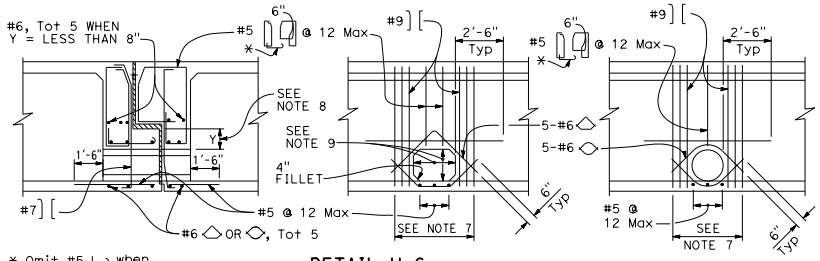

* Omit #5 when Y = less than 8"

DETAIL U-6
At hinge

INTERMEDIATE DIAPHRAGMS AND HINGES
See Details U-5 and U-6

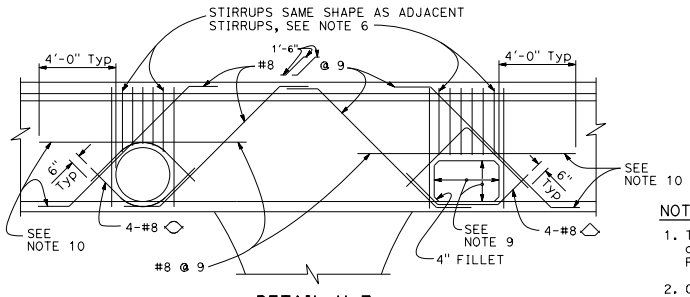

DETAIL U-7
Near or between columns

BENT CAPS

NOTES:

1. The exact location, elevation, size, and direction of openings shall be in accordance with the Project Plans and as directed by the Engineer.
2. Girders not shown. See Project Plans.
3. All reinforcement detailed to be placed in addition to reinforcement shown on Project Plans.
4. Seal utilities at abutments with concrete or mortar, after tightly wrapping utility with 2 layers of 15 LBS building paper. If structure is prestressed, seal to be placed after stressing is completed.
5. Main reinforcement to clear opening.
6. Reinforcement to be same bar size and ⅔ the spacing of adjacent reinforcement shown on Project Plans.
7. Replace each set of 2-#9 bars cut off by opening. Place ½ on each side of opening.
8. When "Y" is less than 8", extend top of opening to bottom of bearing seat elevation.
9. For future utility opening dimensions, see Project Plans and Detail U-4.
10. When there is insufficient space to place reinforcement as shown, hook reinforcement into exterior girder.
11. Unless otherwise shown on Project Plans, casing shall extend to the greater of 5'-0" beyond the end of the approach slab, 5'-0" beyond the end of the adjacent wingwall, or 20'-0" beyond the back of the abutment, or to the State right-of-way limit.

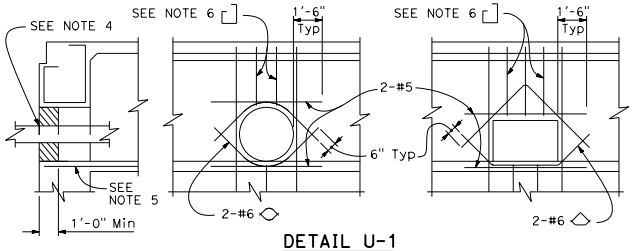

DETAIL U-1

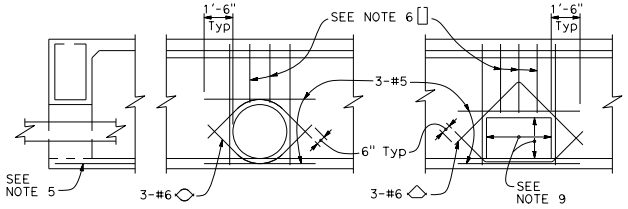

DETAIL U-3

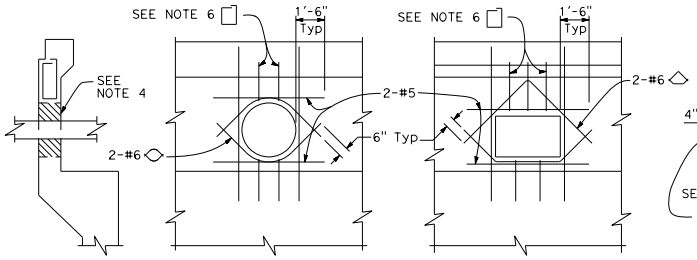

DETAIL U-2

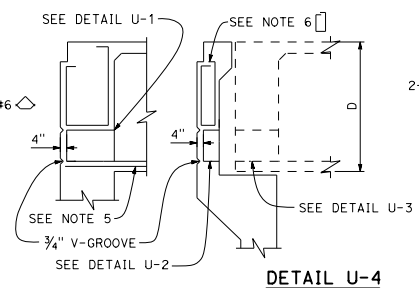

DETAIL U-4
For future utility opening

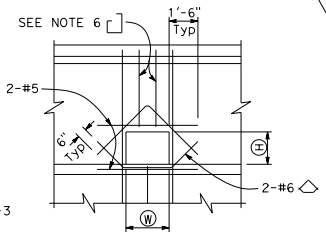

For future utility opening dimensions not shown on Project Plans use:
Ⓗ = ⅓ D or 1'-6" Min, whichever is greater
Ⓦ = ⅓ D or 2'-0" Min, whichever is greater

ABUTMENT DIAPHRAGMS
See Details U-1 thru U-4, and U-8

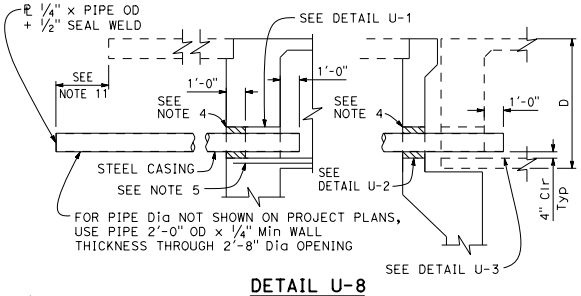

DETAIL U-8
For future utility provisions under approach slab

STATE OF CALIFORNIA
DEPARTMENT OF TRANSPORTATION

UTILITY OPENING BOX GIRDER

NO SCALE

B7-10

2026 STANDARD PLAN B7-10

7-1-26

Return to Table of Contents

Dist	COUNTY	ROUTE	POST MILES TOTAL PROJECT	SHEET No.	TOTAL SHEETS

Peter W. Norboe
REGISTERED CIVIL ENGINEER

September 18, 2026
PLANS APPROVAL DATE

REGISTERED PROFESSIONAL ENGINEER
Peter W. Norboe
No. C57519
Exp. 12-31-27
CIVIL
STATE OF CALIFORNIA

THE STATE OF CALIFORNIA OR ITS OFFICERS OR AGENTS SHALL NOT BE RESPONSIBLE FOR THE ACCURACY OR COMPLETENESS OF SCANNED COPIES OF THIS PLAN SHEET.

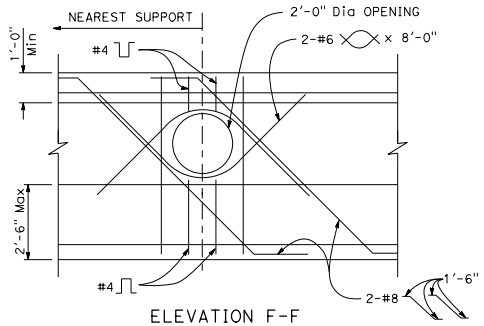

ELEVATION F-F

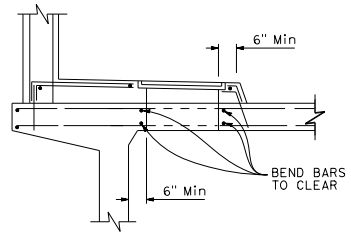

SECTION C-C

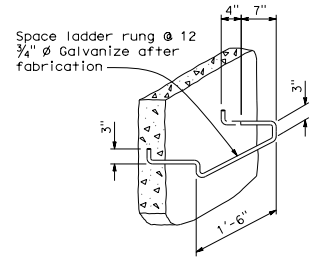

BAR STEP

LADDER RUNG DETAILS

DETAIL U44

NOTES:

1. For exact location of openings, see other sheets.
2. Location and size of manholes may be modified as directed by the Engineer, provided minimum dimensions are maintained.
3. All reinforcement detailed to be placed in addition to reinforcement shown on other sheets.
4. Step inserts may be substituted for the standard step detail. Step inserts shall comply with State Industrial Safety requirements.
5. Covers for use on sewer structures shall bear the letter "S"; on storm drain structures the letter "D"; on openings for utilities the letter "U".
6. Frame and cover shall be cast iron.
7. Cover shall be supplied with bolt down or locking devices.

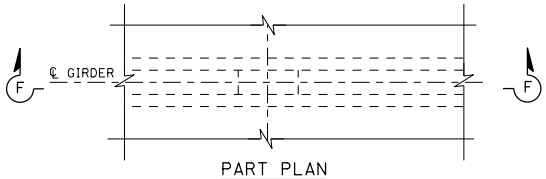

PART PLAN

GIRDER STEM ACCESS OPENING

DETAIL U41

See Notes 1 thru 3

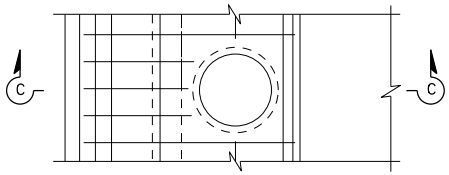

PART PLAN

SIDEWALK ACCESS OPENING

DETAIL U42

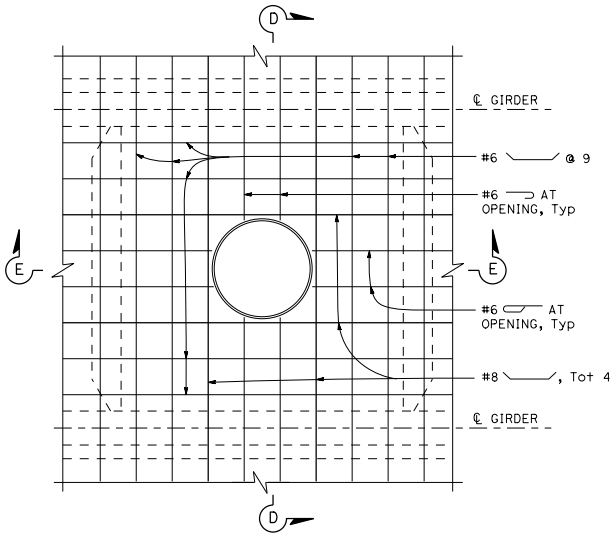

PART PLAN

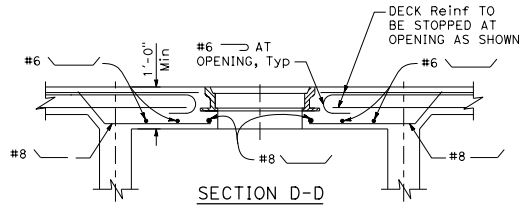

SECTION D-D

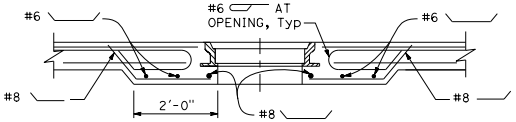

SECTION E-E

NOTE:
Where manhole is located adjacent to a diaphragm or abut, substitute Half Section E-E on one side of Section E-E.

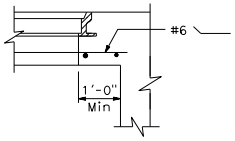

HALF SECTION E-E

DECK ACCESS OPENING

DETAIL U43

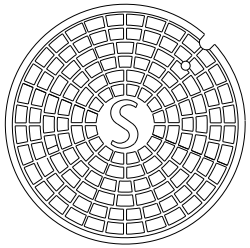

TOP OF MANHOLE COVER

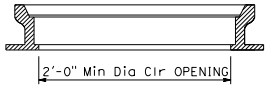

SECTION THROUGH FRAME

NON-ROCKING MANHOLE FRAME AND COVER FOR DECKS

DETAIL U45

See Notes 4 and 5

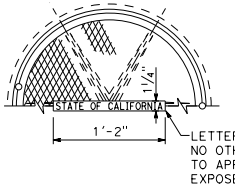

TOP OF MANHOLE FRAME AND COVER

SECTION THROUGH FRAME AND COVER

MANHOLE FRAME AND COVER FOR SIDEWALKS

DETAIL U46

See Notes 6 and 7

STATE OF CALIFORNIA
DEPARTMENT OF TRANSPORTATION

UTILITY DETAILS

NO SCALE

B7-11

2026 STANDARD PLAN B7-11

7-1-26

Return to Table of Contents

Dist	COUNTY	ROUTE	POST MILES TOTAL PROJECT	SHEET No.	TOTAL SHEETS

REGISTERED CIVIL ENGINEER

September 18, 2026
PLANS APPROVAL DATE

REGISTERED PROFESSIONAL ENGINEER Marc Friedheim No. C57968 Exp. 6-30-28 CIVIL STATE OF CALIFORNIA

THE STATE OF CALIFORNIA OR ITS OFFICERS OR AGENTS SHALL NOT BE RESPONSIBLE FOR THE ACCURACY OR COMPLETENESS OF SCANNED COPIES OF THIS PLAN SHEET.

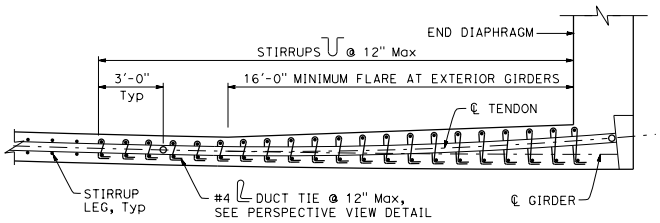

PLAN

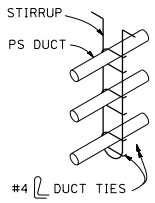

PERSPECTIVE VIEW

DETAIL 5-1

DUCT TIES AT TENDON HORIZONTAL ANGLE CHANGES

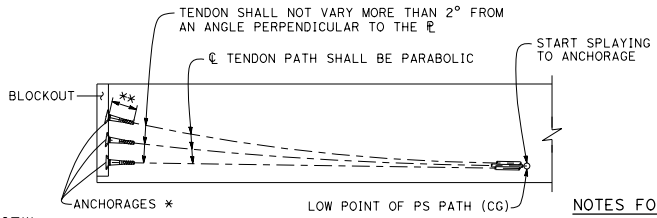

DETAIL 5-2

ELEVATION
ANCHORAGES AND PRESTRESSING PATH

* Edge distance of anchorages shall be 1½" Min
** Minimum tangent length 5'-0"

NOTES FOR DETAIL 5-1:

1. Tendon horizontal angle change at end diaphragm shown. Duct tie placement similar for other locations where tendon horizontal angle changes occur. For curved girders place duct ties at tendon angle changes where ℄ tendon radius is smaller than ℄ girder radius.
2. Adjacent duct ties may be staggered vertically to facilitate placement if stirrup spacing is 6" or less.
3. Place closed end of duct ties toward inside of tendon curve.
4. Wrap duct ties around both stirrup legs.
5. Individual duct ties may only be used to anchor one duct.

LEGEND:

o - Denotes beginning or end of tendon horizontal angle change (BC, EC, or PCC)

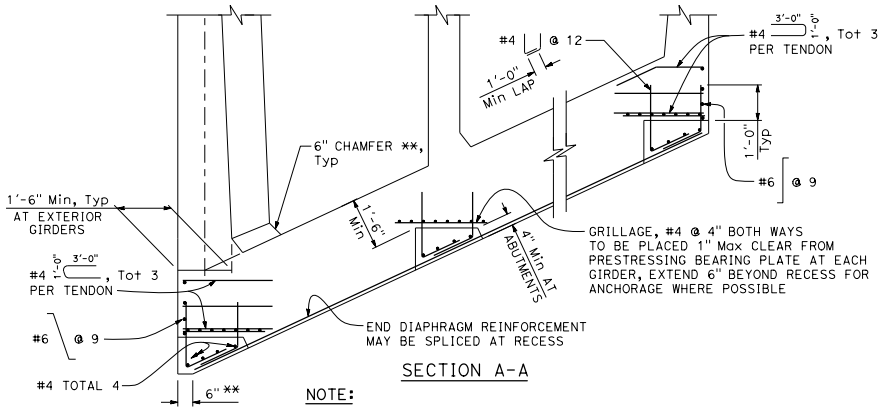

** Omit for skew < 20°

SECTION A-A

NOTE:
Local zone reinforcing not shown. See shop drawings provided by the contractor.

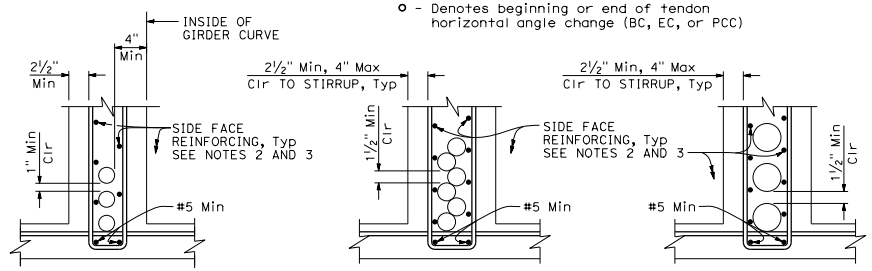

DUCTS 4½" OD AND LESS FOR HORIZONTAL CURVE RADIUS ≤ 2000'

DUCTS 4½" OD AND LESS

DUCTS OVER 4½" OD

DETAIL 5-4

CLEARANCE REQUIREMENTS FOR DUCTS

NOTES FOR DETAIL 5-4:

1. ⊔ Stirrups may also be used.
2. For additional details, see Standard Plan B7-1, and Project Plans.
3. Bar reinforcing which interferes with prestressing ducts may be adjusted as approved by the Engineer.
4. The detail for Ducts Over 4½" OD shall be used on tangent and horizontally curved alignments.

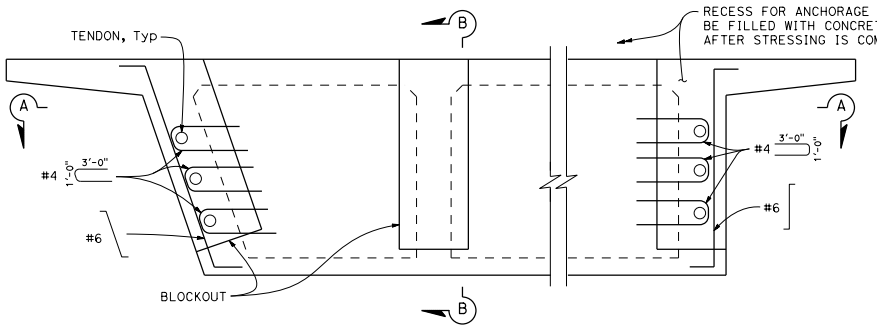

DETAIL 5-3

PRESTRESS ANCHORAGE DETAILS AT END DIAPHRAGMS

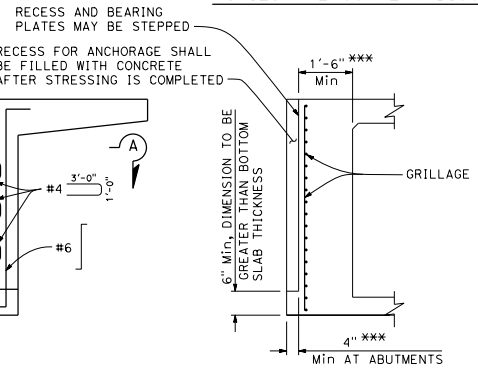

SECTION B-B

*** Measured perpendicular to diaphragm face

STATE OF CALIFORNIA
DEPARTMENT OF TRANSPORTATION

CAST-IN-PLACE POST-TENSIONED GIRDER DETAILS

NO SCALE

B8-5

2026 STANDARD PLAN B8-5

7-1-26

Return to Table of Contents

Dist	COUNTY	ROUTE	POST MILES TOTAL PROJECT	SHEET No.	TOTAL SHEETS

REGISTERED CIVIL ENGINEER

September 18, 2026
PLANS APPROVAL DATE

REGISTERED PROFESSIONAL ENGINEER Daniel Sessions No. C77723 Exp. 6-30-27 CIVIL STATE OF CALIFORNIA

THE STATE OF CALIFORNIA OR ITS OFFICERS OR AGENTS SHALL NOT BE RESPONSIBLE FOR THE ACCURACY OR COMPLETENESS OF SCANNED COPIES OF THIS PLAN SHEET.

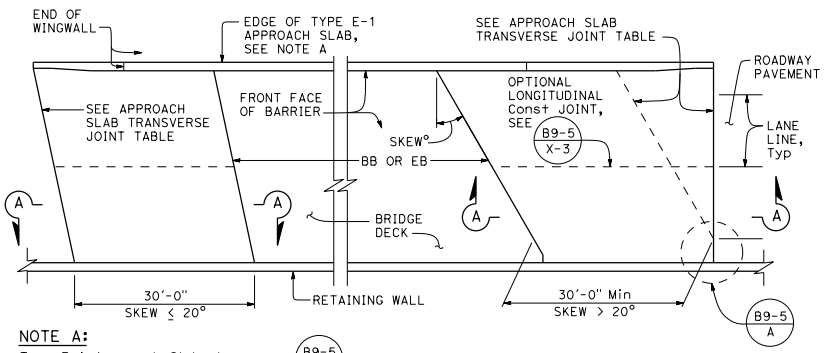

NOTE A:
Type E-1 Approach Slab shown, see B9-5 X-2 for Type E-2 details.

PLAN

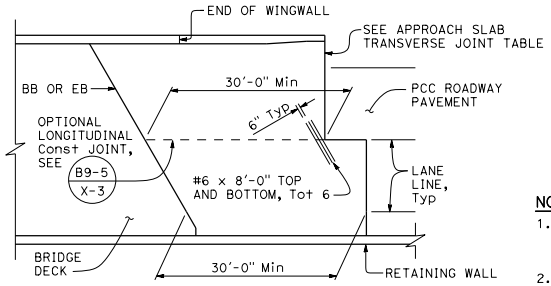

END STAGGER DETAIL

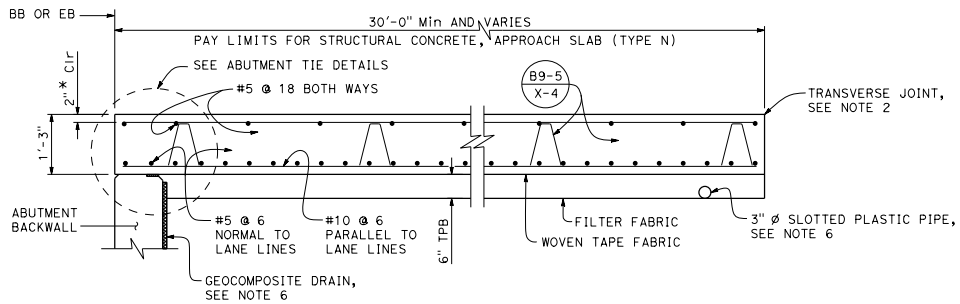

SECTION A-A

Seat type abutment shown, diaphragm type abutment similar.

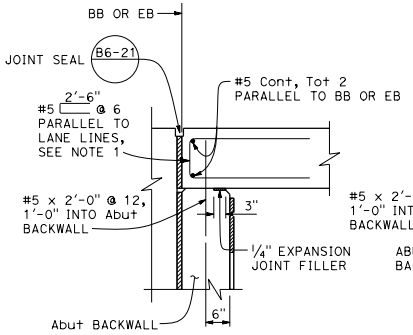

MR ≤ 2"

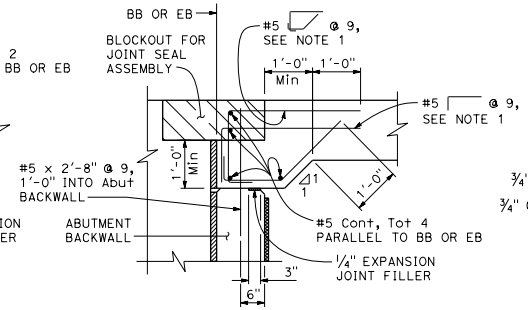

MR > 2"

SEAT TYPE ABUTMENT B9-5 C

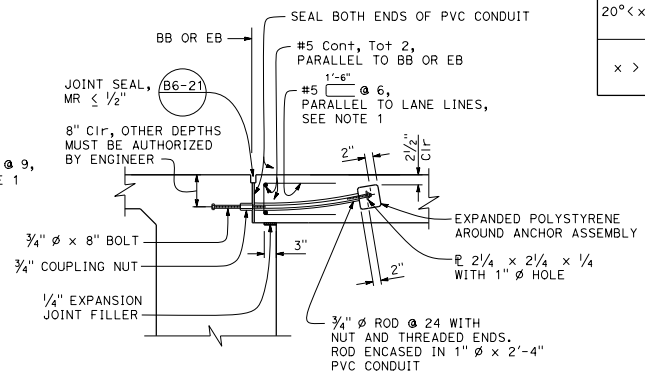

DIAPHRAGM TYPE ABUTMENT

ABUTMENT DETAILS

NOTES:

1. For MR ≤ 2", adjust reinforcement to clear sawcut for sealed joint. For MR > 2", reinforcement must be normal to BB or EB and spaced to avoid joint seal assembly anchorage.
2. Transverse Joint must be a minimum of 5'-0" from an existing or constructed weakened plane joint in approach PCC roadway pavement.
3. Place dowel bars into the adjacent PCC pavement along the Transverse Joint, refer to Standard Plans P10 and P30.
4. At the Contractor's option, approach slab transverse reinforcement may be placed parallel to BB or EB. Spacing of transverse reinforcement is measured along ℄ roadway.
5. For details not shown, refer to Standard Plan B9-5.
6. For structure approach drainage details, refer to Standard Plan B9-6.

LEGEND:

* All approach slab top mat reinforcement shall have minimum 2½" clear cover in Freeze-Thaw Area.

APPROACH SLAB TRANSVERSE JOINT		
APPROACH SKEW, x	WITH HMA ROADWAY PAVEMENT	WITH PCC ROADWAY PAVEMENT
x < 20°	PARALLEL TO BB OR EB	PARALLEL TO BB OR EB
20° < x < 45°	PARALLEL TO BB OR EB (B9-5 A)	STAGGER AT LANE LINES 24' TO 36' APART, SEE END STAGGER DETAIL
x > 45°	PARALLEL TO BB OR EB (B9-5 A)	STAGGER AT EACH LANE LINE, SEE END STAGGER DETAIL

STATE OF CALIFORNIA
DEPARTMENT OF TRANSPORTATION

STRUCTURE APPROACH TYPE N (30)

NO SCALE

B9-1

2026 STANDARD PLAN B9-1

7-1-26

Return to Table of Contents

Dist	COUNTY	ROUTE	POST MILES TOTAL PROJECT	SHEET No.	TOTAL SHEETS

REGISTERED CIVIL ENGINEER

September 18, 2026

PLANS APPROVAL DATE

REGISTERED PROFESSIONAL ENGINEER Daniel Sessions No. C77723 Exp. 6-30-27 CIVIL STATE OF CALIFORNIA

THE STATE OF CALIFORNIA OR ITS OFFICERS OR AGENTS SHALL NOT BE RESPONSIBLE FOR THE ACCURACY OR COMPLETENESS OF SCANNED COPIES OF THIS PLAN SHEET.

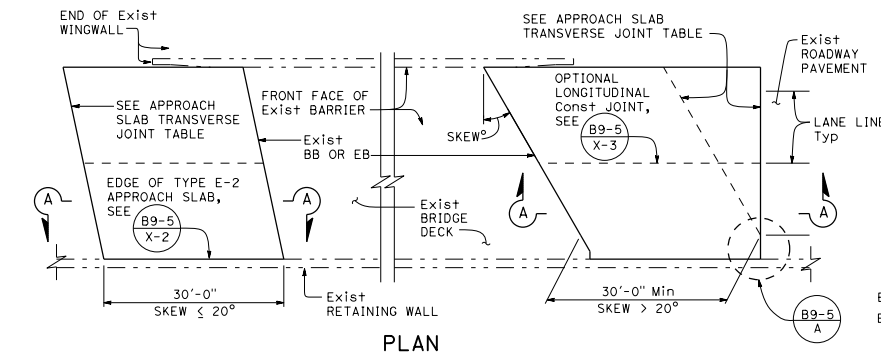

PLAN

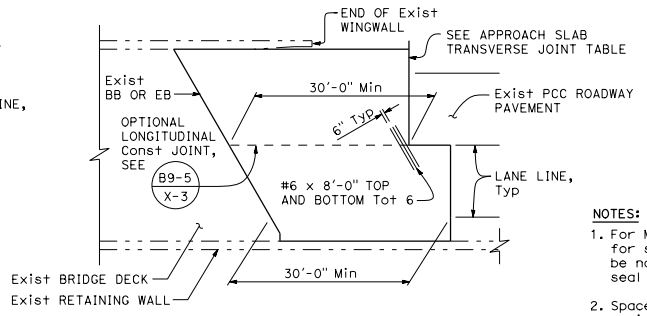

END STAGGER DETAIL

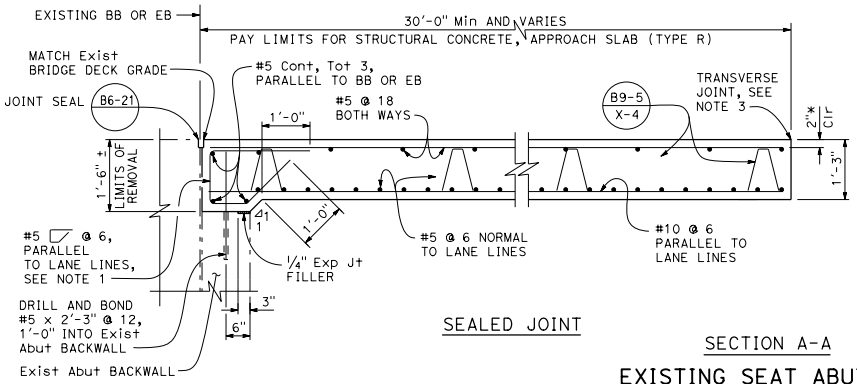

SEALED JOINT

SECTION A-A

EXISTING SEAT ABUTMENT

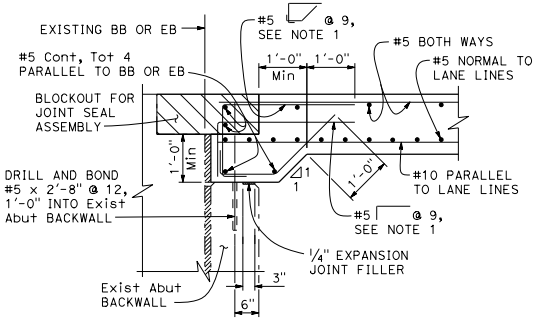

JOINT SEAL ASSEMBLY

For additional details not shown, see Sealed Joint.

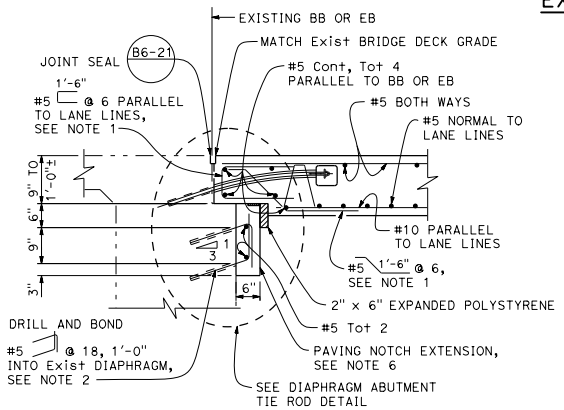

EXISTING DIAPHRAGM ABUTMENT

For additional details not shown, see Existing Seat Abutment.

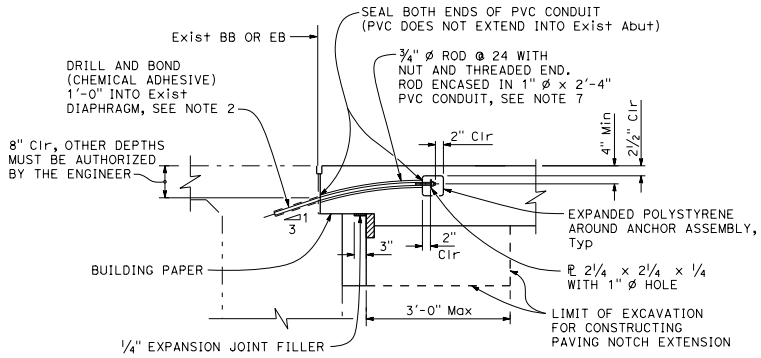

DIAPHRAGM ABUTMENT TIE ROD DETAIL

NOTES:

1. For MR ≤ 2", adjust reinforcement to clear sawcut for sealed joint. For MR > 2", reinforcement must be normal to BB or EB and spaced to avoid joint seal assembly anchorage.
2. Space reinforcement and abutment tie rods to avoid existing prestressing anchorages and other reinforcement in abutment, as needed.
3. Transverse Joint must be a minimum of 5'-0" from an existing or constructed weakened plane joint in approach PCC roadway pavement.
4. Place dowel bars into the adjacent PCC pavement along the Transverse Joint, refer to Standard Plans P10 and P30.
5. At the Contractor's option, approach slab transverse reinforcement may be placed parallel to BB or EB. Spacing of transverse reinforcement is measured along ℄ roadway.
6. Paving notch extension is required if existing diaphragm paving notch is < 6".
7. Tie rods shall be protected from corrosive causing environments or be immediately encased in concrete approach slab as shown.
8. For details not shown, refer to Standard Plan B9-5.

LEGEND:

* All approach slab top mat reinforcement shall have minimum 2½" clear cover in Freeze-Thaw Area.

— - - - Existing Structure

APPROACH SLAB TRANSVERSE JOINT		
APPROACH SKEW, x	WITH HMA ROADWAY PAVEMENT	WITH PCC ROADWAY PAVEMENT
x < 20°	PARALLEL TO BB OR EB	PARALLEL TO BB OR EB
20° < x < 45°	PARALLEL TO BB OR EB (B9-5 A)	STAGGER AT LANE LINES 24' TO 36' APART, SEE END STAGGER DETAIL
x > 45°	PARALLEL TO BB OR EB (B9-5 A)	STAGGER AT EACH LANE LINE, SEE END STAGGER DETAIL

STATE OF CALIFORNIA
DEPARTMENT OF TRANSPORTATION

STRUCTURE APPROACH TYPE R (30)

NO SCALE

B9-2

2026 STANDARD PLAN B9-2

7-1-26

Return to Table of Contents

Dist	COUNTY	ROUTE	POST MILES TOTAL PROJECT	SHEET No.	TOTAL SHEETS

REGISTERED CIVIL ENGINEER

September 18, 2026

PLANS APPROVAL DATE

REGISTERED PROFESSIONAL ENGINEER Daniel Sessions No. C77723 Exp. 6-30-27 CIVIL STATE OF CALIFORNIA

THE STATE OF CALIFORNIA OR ITS OFFICERS OR AGENTS SHALL NOT BE RESPONSIBLE FOR THE ACCURACY OR COMPLETENESS OF SCANNED COPIES OF THIS PLAN SHEET.

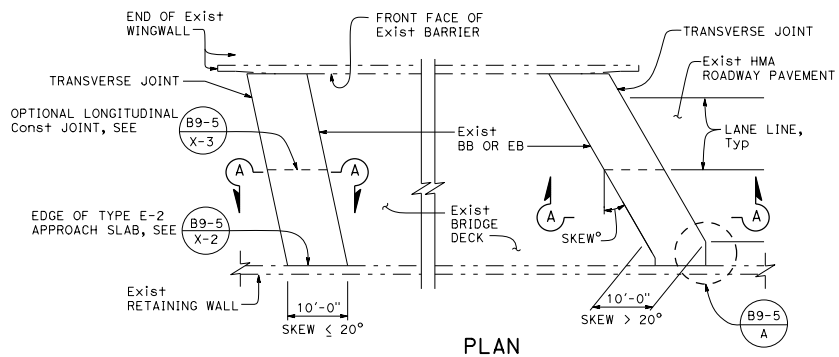

PLAN

LEGEND:

* All approach slab top mat reinforcement shall have minimum 2½" clear cover in Freeze-Thaw Area.

— - - Existing Structure

NOTES:

1. For MR ≤ 2", adjust reinforcement to clear sawcut for sealed joint. For MR > 2", reinforcement must be normal to BB or EB and spaced to avoid joint seal assembly anchorage.
2. Space reinforcement and abutment tie rods to avoid existing prestressing anchorages and other reinforcement in abutment, as needed.
3. Place dowel bars into the adjacent PCC pavement along the Transverse Joint, refer to Standard Plans P10 and P30.
4. At the Contractor's option, approach slab transverse reinforcement may be placed parallel to BB or EB. Spacing of transverse reinforcement is measured along ℄ roadway.
5. Paving notch extension is required if existing diaphragm paving notch is < 6".
6. Tie rods shall be protected from corrosive causing environments or be immediately encased in concrete approach slab as shown.
7. For details not shown, refer to Standard Plan B9-5.

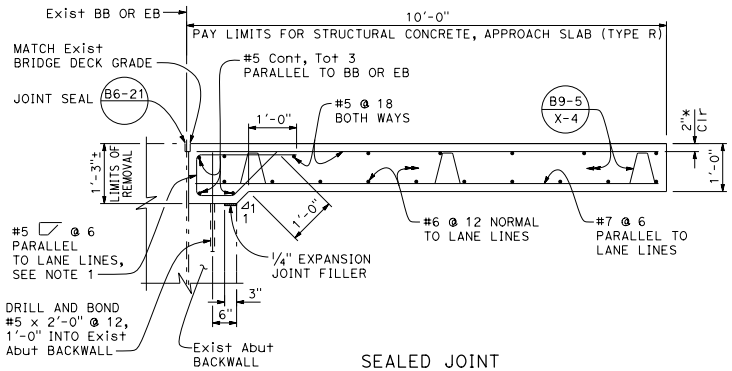

SEALED JOINT

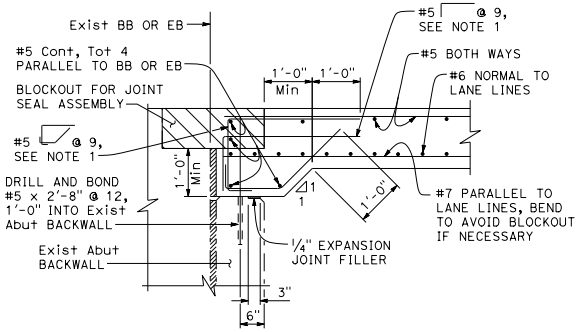

JOINT SEAL ASSEMBLY

For additional details not shown, see Sealed Joint.

SECTION A-A

EXISTING SEAT ABUTMENT

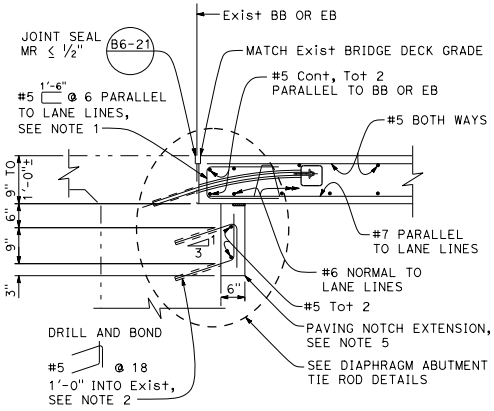

EXISTING DIAPHRAGM ABUTMENT

For additional details not shown, see Existing Seat Abutment.

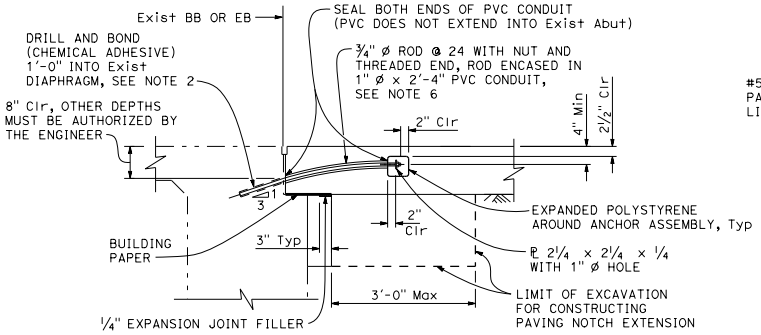

12" PAVING NOTCH

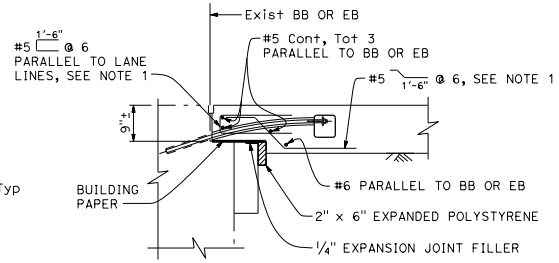

9" PAVING NOTCH

For details not shown, see 12" Paving Notch.

DIAPHRAGM ABUTMENT TIE ROD DETAILS

STATE OF CALIFORNIA
DEPARTMENT OF TRANSPORTATION

STRUCTURE APPROACH TYPE R (10)

NO SCALE

B9-3

2026 STANDARD PLAN B9-3

7-1-26

Return to Table of Contents

Dist	COUNTY	ROUTE	POST MILES TOTAL PROJECT	SHEET No.	TOTAL SHEETS

REGISTERED CIVIL ENGINEER

September 18, 2026
PLANS APPROVAL DATE

REGISTERED PROFESSIONAL ENGINEER
Daniel Sessions
No. C77723
Exp. 6-30-27
CIVIL
STATE OF CALIFORNIA

THE STATE OF CALIFORNIA OR ITS OFFICERS OR AGENTS SHALL NOT BE RESPONSIBLE FOR THE ACCURACY OR COMPLETENESS OF SCANNED COPIES OF THIS PLAN SHEET.

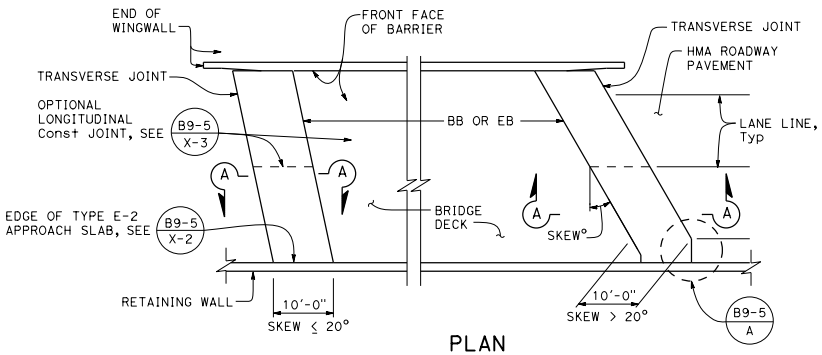

PLAN

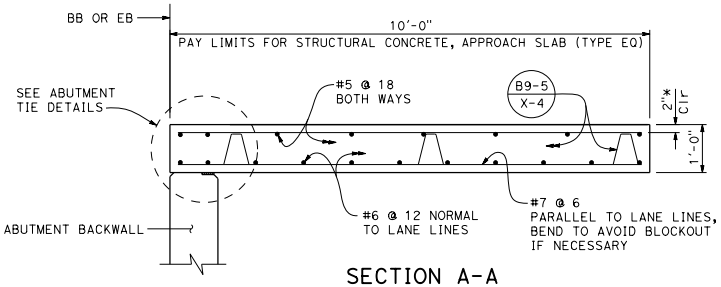

SECTION A-A

Seat Type Abutment shown, Diaphragm Type Abutment similar.

NOTES:

1. For MR ≤ 2", adjust reinforcement to clear sawcut for sealed joint. For MR > 2", reinforcement must be normal to BB or EB and spaced to avoid joint seal assembly anchorage.
2. At the Contractor's option, approach slab transverse reinforcement may be placed parallel to BB or EB. Spacing of transverse reinforcement is measured along ℄ roadway.
3. For details not shown, refer to Standard Plan B9-5.

LEGEND:

* All approach slab top mat reinforcement shall have minimum 2½" clear cover in Freeze-Thaw Area.

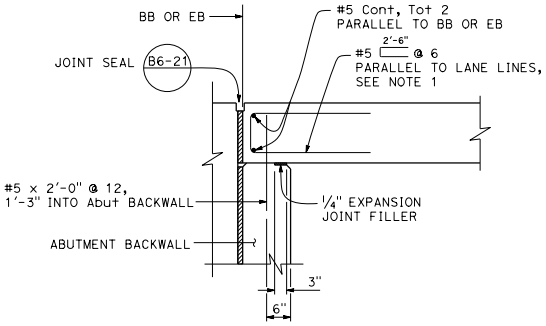

MR ≤ 2"

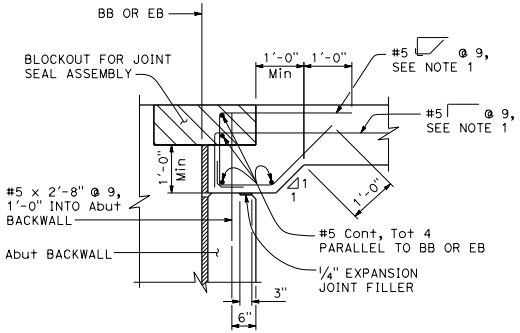

MR > 2"

SEAT TYPE ABUTMENT B9-5 C

ABUTMENT TIE DETAILS

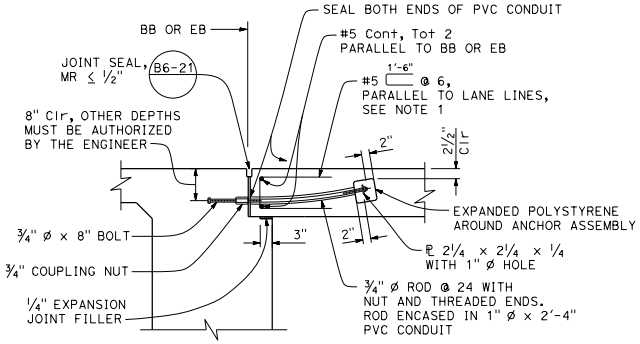

DIAPHRAGM TYPE ABUTMENT

STATE OF CALIFORNIA
DEPARTMENT OF TRANSPORTATION

STRUCTURE APPROACH TYPE EQ (10)

NO SCALE

B9-4

2026 STANDARD PLAN B9-4

7-1-26

Return to Table of Contents

Dist	COUNTY	ROUTE	POST MILES TOTAL PROJECT	SHEET No.	TOTAL SHEETS

REGISTERED CIVIL ENGINEER

September 18, 2026

PLANS APPROVAL DATE

REGISTERED PROFESSIONAL ENGINEER Daniel Sessions No. C77723 Exp. 6-30-27 CIVIL STATE OF CALIFORNIA

THE STATE OF CALIFORNIA OR ITS OFFICERS OR AGENTS SHALL NOT BE RESPONSIBLE FOR THE ACCURACY OR COMPLETENESS OF SCANNED COPIES OF THIS PLAN SHEET.

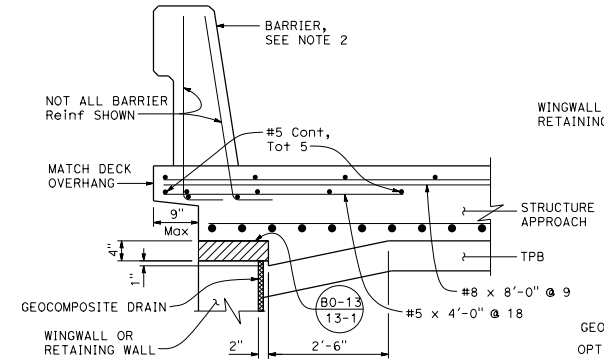

DETAIL X-1

TYPE E-1

Indicates Expanded Polystyrene, remove after concrete is placed.

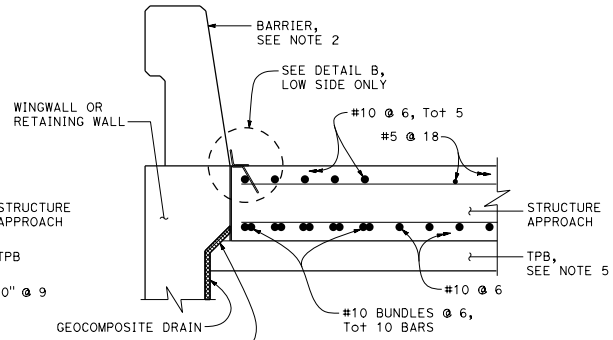

DETAIL X-2

TYPE R (30) AND TYPE N (30)

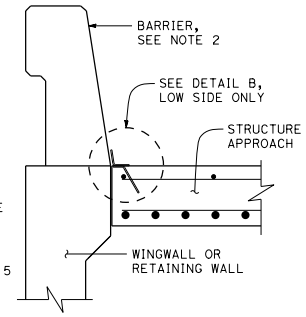

DETAIL X-2

TYPE R (10) AND TYPE EQ

TYPE E-2

NOTES:

1. End the plate or edge angle at beginning of barrier transition, end of wingwall or end of structure approach as applicable.
2. Solid concrete barrier shown, details similar for all concrete and standard post-beam barriers.
3. Joint protection details shown for MR ≤ 2". Details similar when joint seal assembly is required.
4. Polyester concrete shall be placed across approach slab to match bridge deck protection in Freeze-Thaw Area.
5. Treated Permeable Base material is only used for Type N approach slabs. For structure approach drainage details, refer to Standard Plan B9-6.
6. For locations of Detail A, refer to Standard Plans B9-1, B9-2, B9-3, and B9-4.

LEGEND:

* Min lap splice for bottom reinforcement in Freeze-Thaw Area shall be 3'-6".

Threaded Rods and Dowels in Freeze-Thaw Area shall be stainless steel or epoxy-coated prefabricated 9" Drill and Bond dowels into a 9" deep hole.

DESIGN NOTES

DESIGN: AASHTO LRFD Bridge Design Specifications, 2012 Edition with Caltrans Amendments, preface dated January 2014

LIMIT STATES: Service I, Strength I & II, Extreme II and Fatigue I (γ_{FAT} = 1.0)

DEAD LOAD: Includes 35 psf for future wearing surface

LIVE LOAD: HL93 and permit design load
Equivalent strip width method: W_1 = 12 ft
Slab span: L_1 = 24.5 ft (30 ft Approach Slab)
Slab span: L_1 = 7.83 ft (10 ft Approach Slab)

REINFORCED CONCRETE:
f_y = 60 ksi
f'_c = 3.6 ksi
n = 8

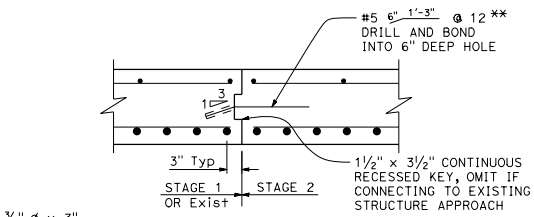

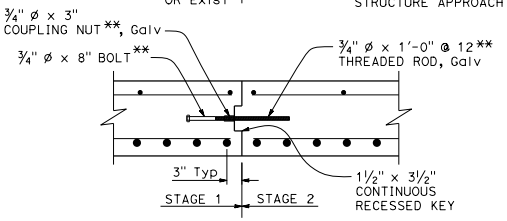

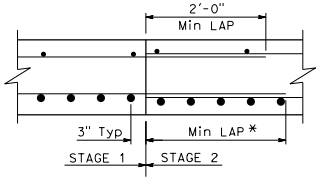

DETAIL X-3

LONGITUDINAL CONSTRUCTION JOINT ALTERNATIVES

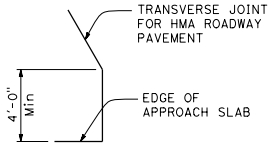

DETAIL A

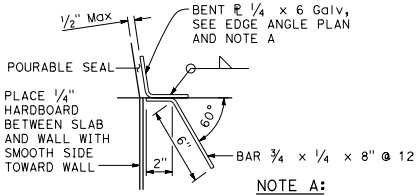

DETAIL B

NOTE A:
Use L3 x 3 x ¼ Galv for concrete barrier or curb with vertical face.

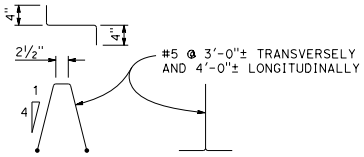

DETAIL X-4

BAR CHAIR DETAIL

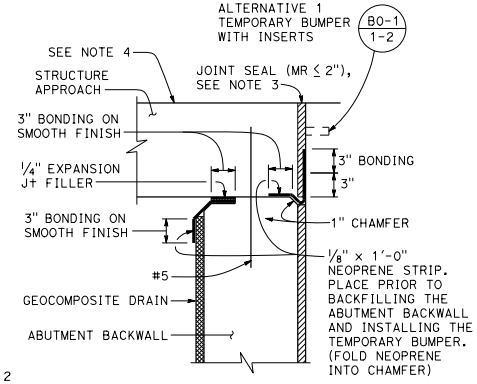

DETAIL C

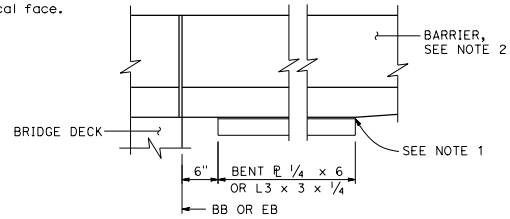

EDGE ANGLE PLAN

STATE OF CALIFORNIA
DEPARTMENT OF TRANSPORTATION

STRUCTURE APPROACH SLAB DETAILS

NO SCALE

B9-5

2026 STANDARD PLAN B9-5

7-1-26

Return to Table of Contents

Dist	COUNTY	ROUTE	POST MILES TOTAL PROJECT	SHEET No.	TOTAL SHEETS

REGISTERED CIVIL ENGINEER

September 18, 2026
PLANS APPROVAL DATE

REGISTERED PROFESSIONAL ENGINEER
Daniel Sessions
No. C77723
Exp. 6-30-27
CIVIL
STATE OF CALIFORNIA

THE STATE OF CALIFORNIA OR ITS OFFICERS OR AGENTS SHALL NOT BE RESPONSIBLE FOR THE ACCURACY OR COMPLETENESS OF SCANNED COPIES OF THIS PLAN SHEET.

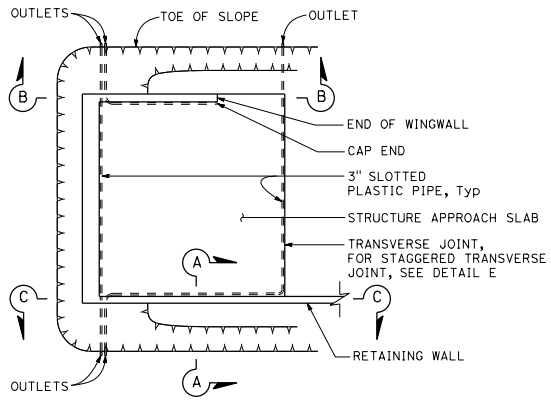

PLAN

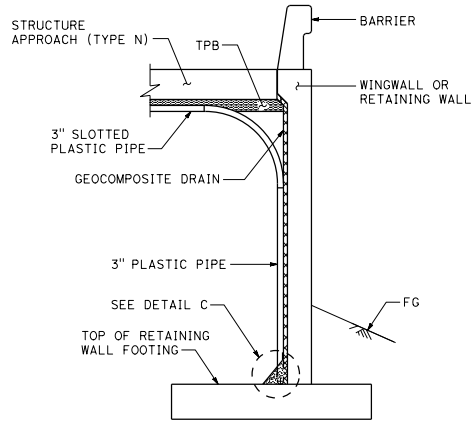

SECTION A-A

NOTES:

1. All bends in plastic pipe must have 3'-0" minimum radius. Plastic pipe used for bends is not required to be slotted.
2. For Approach Slab (Type N) details, refer to Standard Plan B9-1.
3. Drainage details shown are for seat type abutments, diaphragm abutment details are similar.

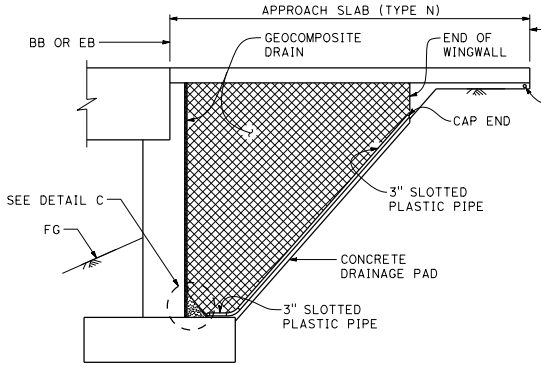

SECTION B-B

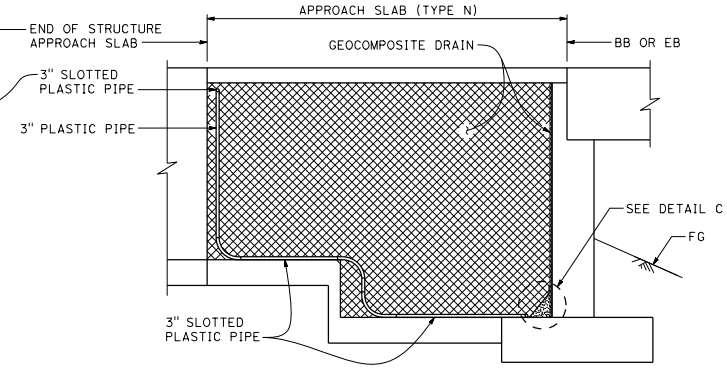

SECTION C-C

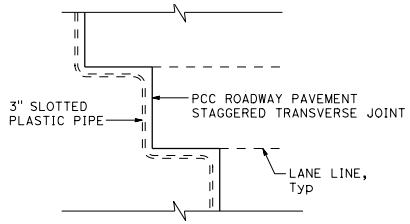

DETAIL E

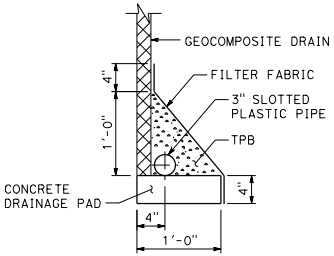

DRAINAGE PAD

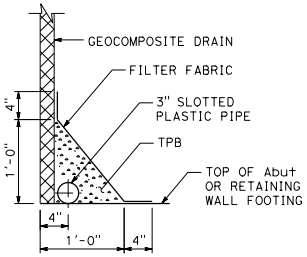

FOOTING

DETAIL C

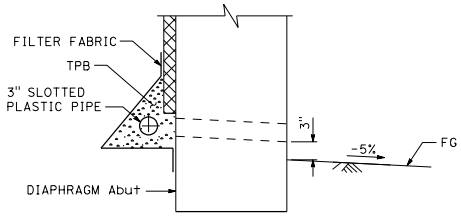

DETAIL D

Diaphragm Abutment shown.
For details not shown, see Detail C.

STATE OF CALIFORNIA
DEPARTMENT OF TRANSPORTATION

STRUCTURE APPROACH DRAINAGE DETAILS

NO SCALE

B9-6

7-1-26

2026 STANDARD PLAN B9-6

Return to Table of Contents

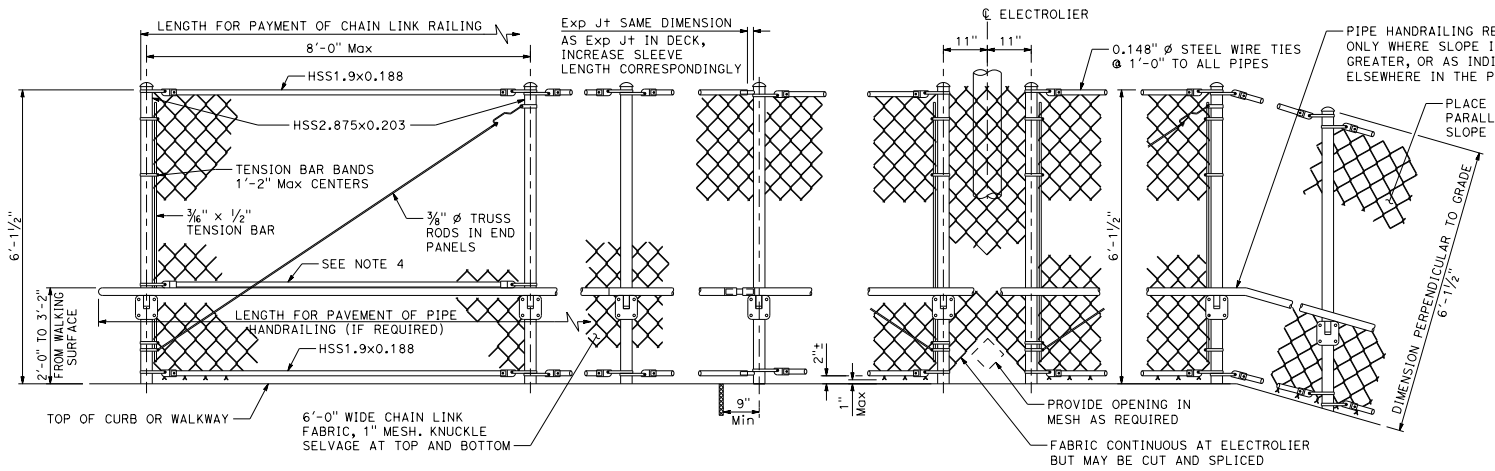

END POST

INTERMEDIATE POSTS

AT DECK EXPANSION JOINTS

AT ELECTROLIER

ON SLOPES

Dist	COUNTY	ROUTE	POST MILES TOTAL PROJECT	SHEET No.	TOTAL SHEETS

REGISTERED CIVIL ENGINEER

September 18, 2026
PLANS APPROVAL DATE

REGISTERED PROFESSIONAL ENGINEER
Aiman Malak
No. C73369
Exp. 12-31-26
CIVIL
STATE OF CALIFORNIA

THE STATE OF CALIFORNIA OR ITS OFFICERS OR AGENTS SHALL NOT BE RESPONSIBLE FOR THE ACCURACY OR COMPLETENESS OF SCANNED COPIES OF THIS PLAN SHEET.

NOTES:

1. Peen all bolt threads.
2. Railing shall conform to horizontal and vertical alignment. Posts shall be vertical. Top and bottom pipes shall be bent if radius is 148'-0" or less; may be on 8'-0" chords if radius is over 148'-0".
3. When railing is on slope, 6'-0" chain link fabric shall be placed parallel to slope.
4. Additional HSS 1.9 x 0.188 required when radius is less than 150'-0".

DESIGN NOTES:

DESIGN:

AASHTO LRFD Bridge Design Specifications
8th Edition 2017 with California Amendments
April 2019

CONCRETE:

f_y = 60 ksi
f'_c = 3.6 ksi

414

HSS: f_y = 50 ksi

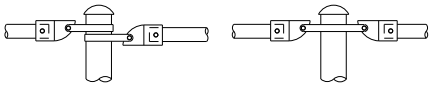

ALTERNATIVE DETAILS

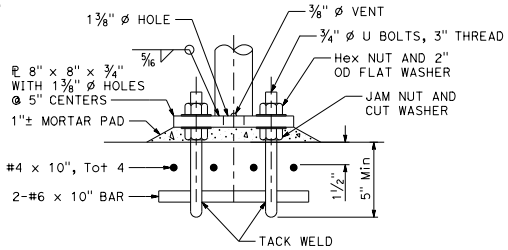

ANCHORAGE DETAIL

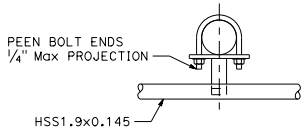

PLAN

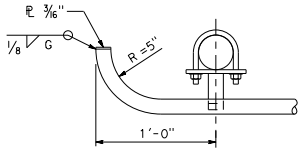

PLAN

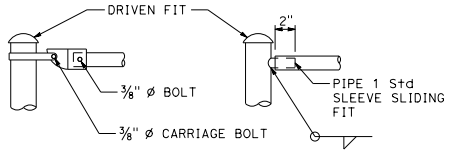

TYPICAL CONNECTION DETAILS

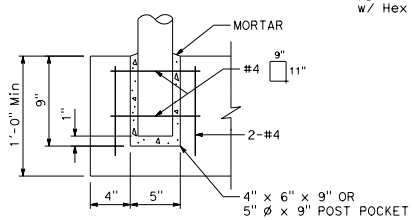

ALTERNATIVE ANCHORAGE DETAIL

May be used when thickness of concrete is 1'-0" or more.

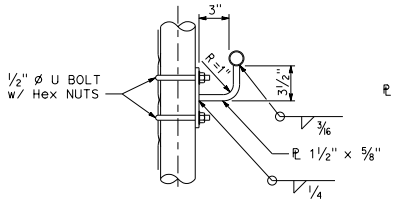

SIDE VIEW

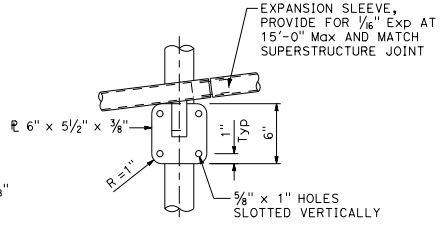

ELEVATION

PIPE HANDRAILING BRACKET

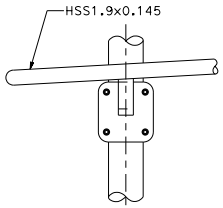

ELEVATION

PIPE HANDRAILING AT END

STATE OF CALIFORNIA
DEPARTMENT OF TRANSPORTATION

CHAIN LINK RAILING

NO SCALE

B11-7

7-1-26

2026 STANDARD PLAN B11-7

Return to Table of Contents

Dist	COUNTY	ROUTE	POST MILES TOTAL PROJECT	SHEET No.	TOTAL SHEETS

REGISTERED CIVIL ENGINEER

September 18, 2026
PLANS APPROVAL DATE

REGISTERED PROFESSIONAL ENGINEER
Aiman Malak
No. C73369
Exp. 12-31-26
CIVIL
STATE OF CALIFORNIA

THE STATE OF CALIFORNIA OR ITS OFFICERS OR AGENTS SHALL NOT BE RESPONSIBLE FOR THE ACCURACY OR COMPLETENESS OF SCANNED COPIES OF THIS PLAN SHEET.

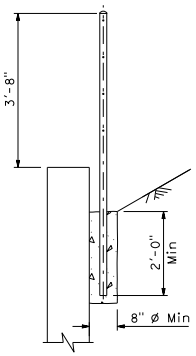

SECTION A-A
Existing

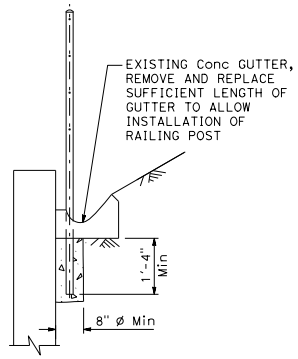

SECTION B-B
Existing

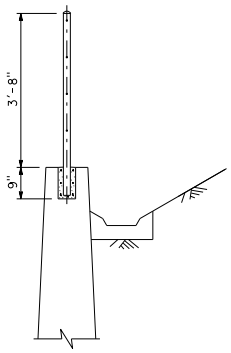

SECTION C-C
New construction

DESIGN NOTES

DESIGN:

AASHTO LRFD Bridge Design Specifications
8th Edition 2017 with California Amendments
April 2019

CONCRETE:

fy = 60 ksi
f'c = 3.6 ksi

NOTES:

1. Maximum distance between turnbuckles shall be 200'-0"±.
2. Intermediate turnbuckles to be placed in adjacent spans.
3. Cable shall not be spliced between intermediate turnbuckles and end posts.
4. Posts to be vertical.
5. Alignment of holes in posts may vary to conform to slope of top of retaining wall.
6. The Contractor shall verify all dependent dimensions in the field before ordering or fabricating any material.
7. Line posts shall be braced horizontally and trussed diagonally in both directions at intervals not to exceed 1000'.
8. Post pockets to be centered in top of wall.
9. Typical end spans, braced in both directions, shall be constructed at changes in line where the angle of deflection is 15° or more.
10. Shall not be used for pedestrian walkways.

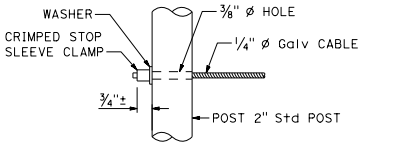

ALTERNATIVE DEAD END ANCHORAGE

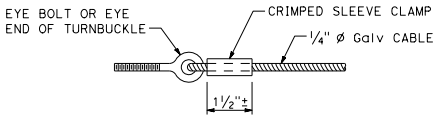

ALTERNATIVE CABLE CONNECTION

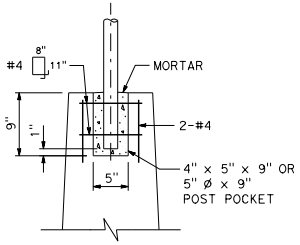

POST POCKET

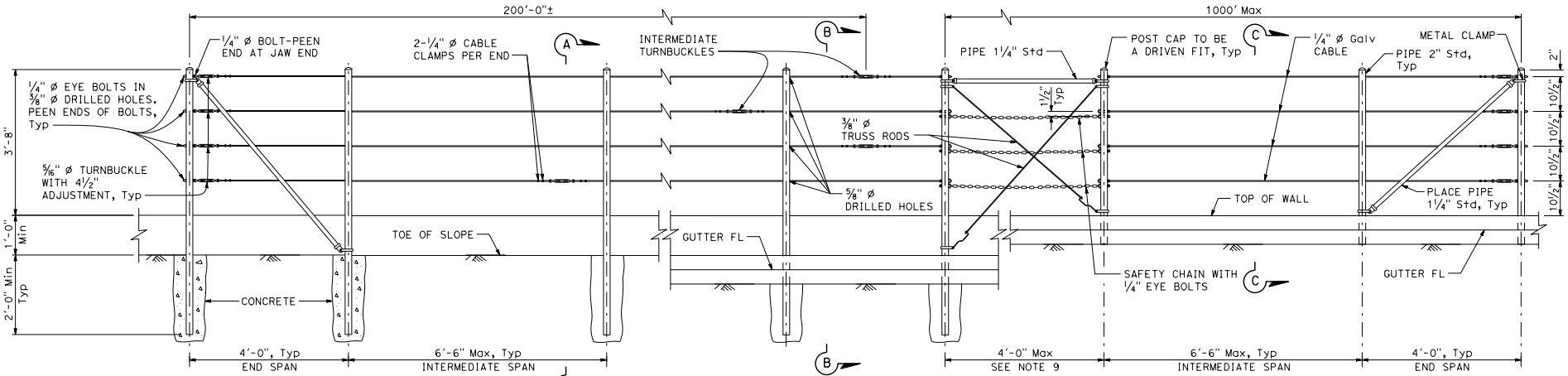

EXISTING WALL (WITHOUT GUTTER)
Existing

RETAINING WALL (WITH GUTTER)
Existing

RETAINING WALL (WITH GUTTER)
New construction

ELEVATION

STATE OF CALIFORNIA
DEPARTMENT OF TRANSPORTATION

CABLE RAILING

NO SCALE

B11-47

7-1-26

2026 STANDARD PLAN B11-47

Return to Table of Contents

Dist	COUNTY	ROUTE	POST MILES TOTAL PROJECT	SHEET No.	TOTAL SHEETS

REGISTERED CIVIL ENGINEER

September 18, 2026
PLANS APPROVAL DATE

REGISTERED PROFESSIONAL ENGINEER Aiman Malak No. C73369 Exp. 12-31-26 CIVIL STATE OF CALIFORNIA

THE STATE OF CALIFORNIA OR ITS OFFICERS OR AGENTS SHALL NOT BE RESPONSIBLE FOR THE ACCURACY OR COMPLETENESS OF SCANNED COPIES OF THIS PLAN SHEET.

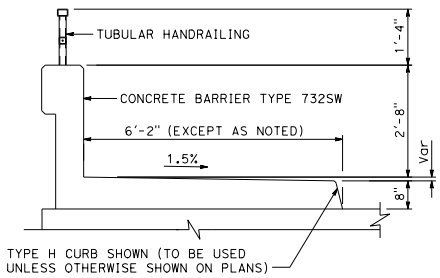

TYPICAL SECTION

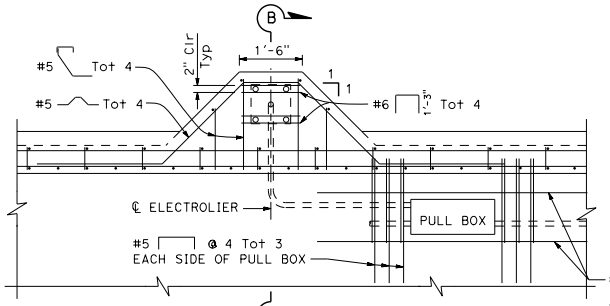

PLAN

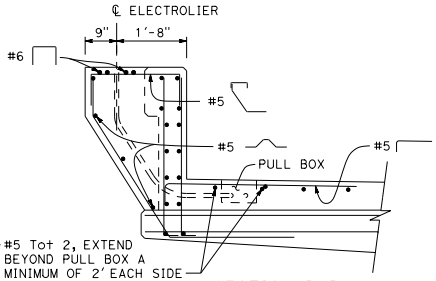

SECTION B-B

ELECTROLIER PEDESTAL DETAILS

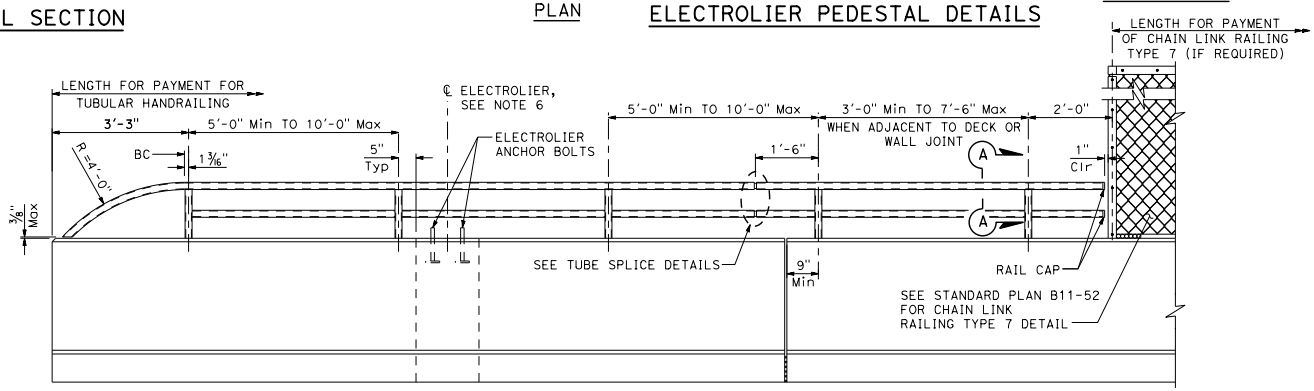

ELEVATION

NOTES:

1. Post shall be normal to railing.
2. Rail tubes shall be shop bent or fabricated to fit horizontal curve when radius is less than 950'.
3. Tube splices shall be located in the tubes spanning deck or wall joints. Increase joint width in tubes to match expansionjoint width and increase sleeve length correspondingly.
4. Top rail tube shall be continuous over not less than two posts except a short post spacing is permitted near deck or wall joints, electroliers, or other rail discontinuities as noted.
5. For details and reinforcement not shown, see Standard Plan B11-58.
6. For electrolier mounting details, see Standard Plans ES-6A and ES-6B.

DESIGN NOTE:

AASHTO LRFD Bridge Design Specifications
8th Edition 2017 with California Amendments
April 2019

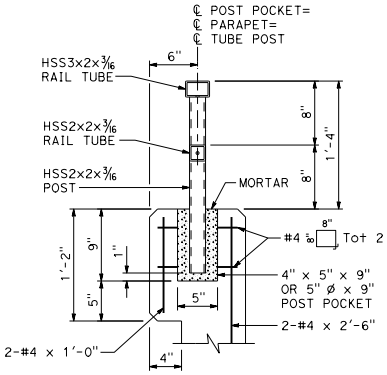

POST ANCHORAGE DETAILS

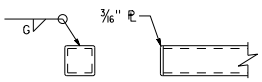

RAIL CAP
HSS3x2x3/16 Similar

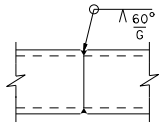

TUBE-WELDED SPLICE

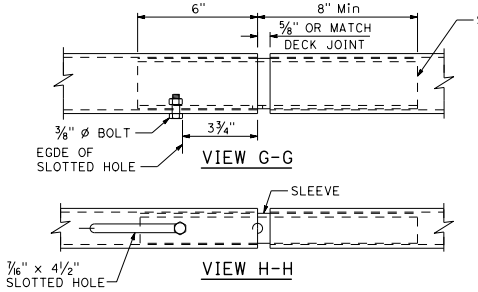

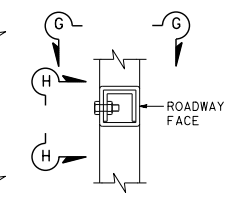

SECTION

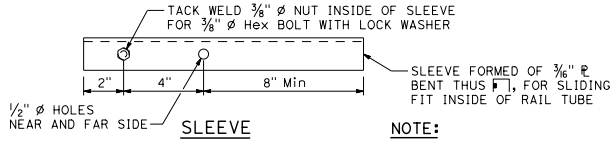

SLEEVE

TUBE SPLICE DETAILS
HSS3x2x3/16 Similar

NOTE:
3/8" ø nut tack welded to sleeve may be replaced by drilled and tapped hole in sleeve

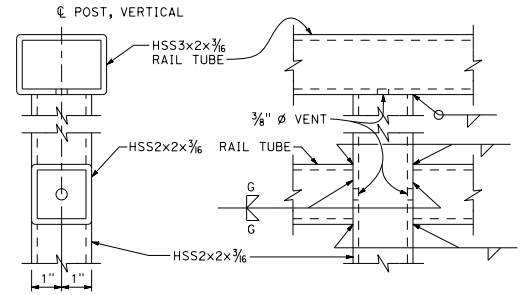

SECTION A-A ELEVATION

RAIL CONNECTION DETAILS

STATE OF CALIFORNIA
DEPARTMENT OF TRANSPORTATION

TUBULAR HANDRAILING

NO SCALE

B11-51

7-1-26

2026 STANDARD PLAN B11-51

Return to Table of Contents

Dist	COUNTY	ROUTE	POST MILES TOTAL PROJECT	SHEET No.	TOTAL SHEETS

REGISTERED CIVIL ENGINEER

September 18, 2026

PLANS APPROVAL DATE

REGISTERED PROFESSIONAL ENGINEER — Aiman Malak — No. C73369 — Exp. 12-31-26 — CIVIL — STATE OF CALIFORNIA

THE STATE OF CALIFORNIA OR ITS OFFICERS OR AGENTS SHALL NOT BE RESPONSIBLE FOR THE ACCURACY OR COMPLETENESS OF SCANNED COPIES OF THIS PLAN SHEET.

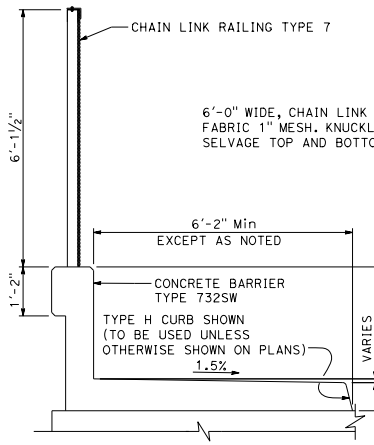

TYPICAL SECTION

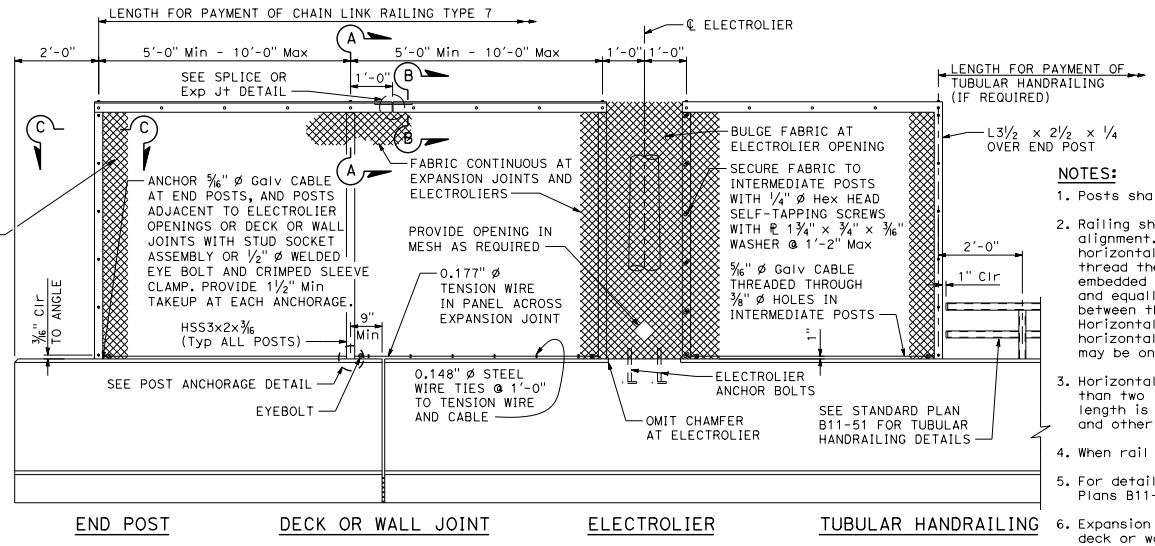

ELEVATION

NOTES:

1. Posts shall be vertical.
2. Railing shall conform to horizontal and vertical alignment. When railing is placed on a curved horizontal alignment with radius of 148'-0" or less, thread the 5/16" ø cable through 3/8" ø welded eye rods embedded 4" into the top of the concrete parapet and equally spaced to limit the midordinate distance between the 5/16" ø cable and the curve to 1" maximum. Horizontal angle shall be bent to conform to horizontal alignment if radius is 148'-0" or less and may be on 10'-0" chords if radius is over 148'-0".
3. Horizontal angle shall be continuous over not less than two intermediate posts, except that a shorter length is permitted at expansion joints, electroliers and other rail discontinuities.
4. When rail is on slope, place fabric parallel to slope.
5. For details and reinforcement not shown see Standard Plans B11-58 to B11-59A.
6. Expansion joint same dimension as expansion joint in deck or wall. Increase slotted hole length and splice bar length correspondingly.
7. Design valid for bridges with the top of Chain Link Railing Type 7 equal to or less than 150' height above surrounding ground surfaces.

DESIGN NOTES:

DESIGN:

AASHTO LRFD Bridge Design Specifications 8th Edition 2017 with California Amendments April 2019

CONCRETE:

fy = 60 ksi
f'c = 3.6 ksi

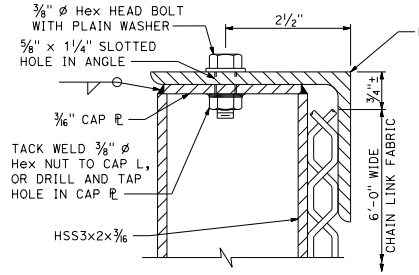

SECTION A-A

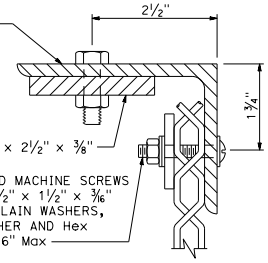

SECTION B-B

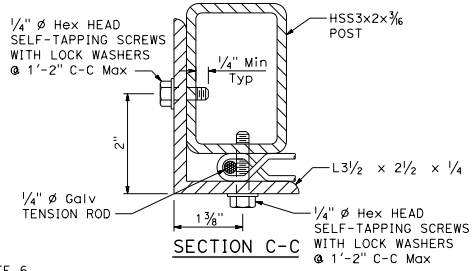

SECTION C-C

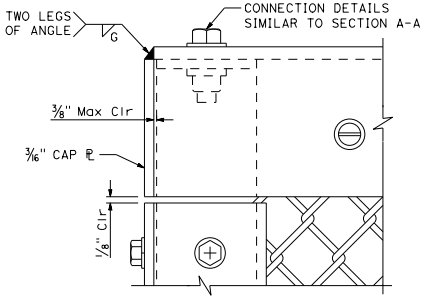

END POST ELEVATION

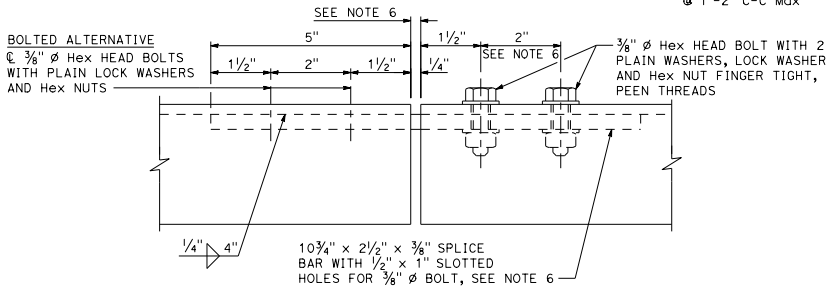

SPLICE OR EXPANSION JOINT DETAIL

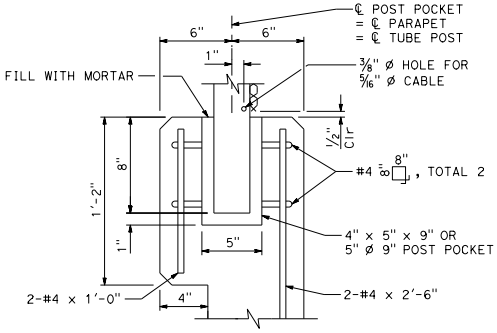

POST ANCHORAGE DETAIL

STATE OF CALIFORNIA
DEPARTMENT OF TRANSPORTATION

CHAIN LINK RAILING TYPE 7

NO SCALE

B11-52

7-1-26

Return to Table of Contents

Dist	COUNTY	ROUTE	POST MILES TOTAL PROJECT	SHEET No.	TOTAL SHEETS

REGISTERED CIVIL ENGINEER

September 18, 2026
PLANS APPROVAL DATE

REGISTERED PROFESSIONAL ENGINEER
Aiman Malak
No. C73369
Exp. 12-31-26
CIVIL
STATE OF CALIFORNIA

THE STATE OF CALIFORNIA OR ITS OFFICERS OR AGENTS SHALL NOT BE RESPONSIBLE FOR THE ACCURACY OR COMPLETENESS OF SCANNED COPIES OF THIS PLAN SHEET.

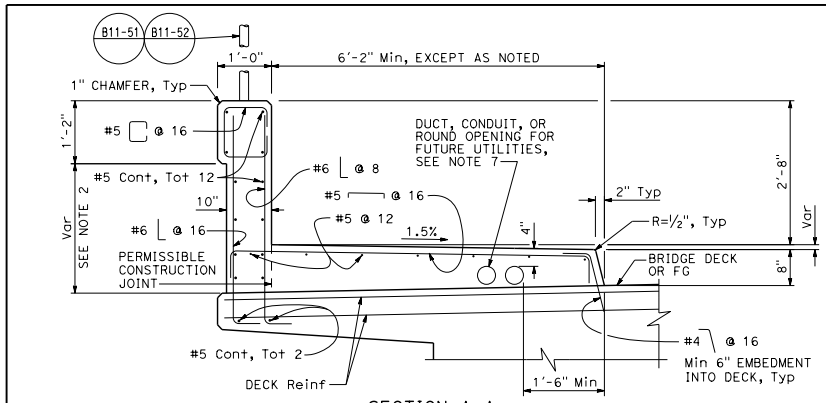

SECTION A-A
Typical section on deck

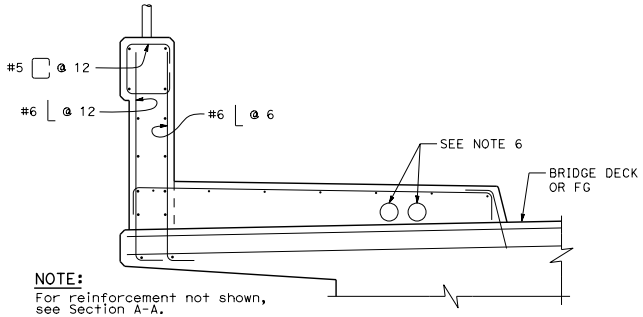

NOTE:
For reinforcement not shown, see Section A-A.

SECTION B-B
Typical section at joints

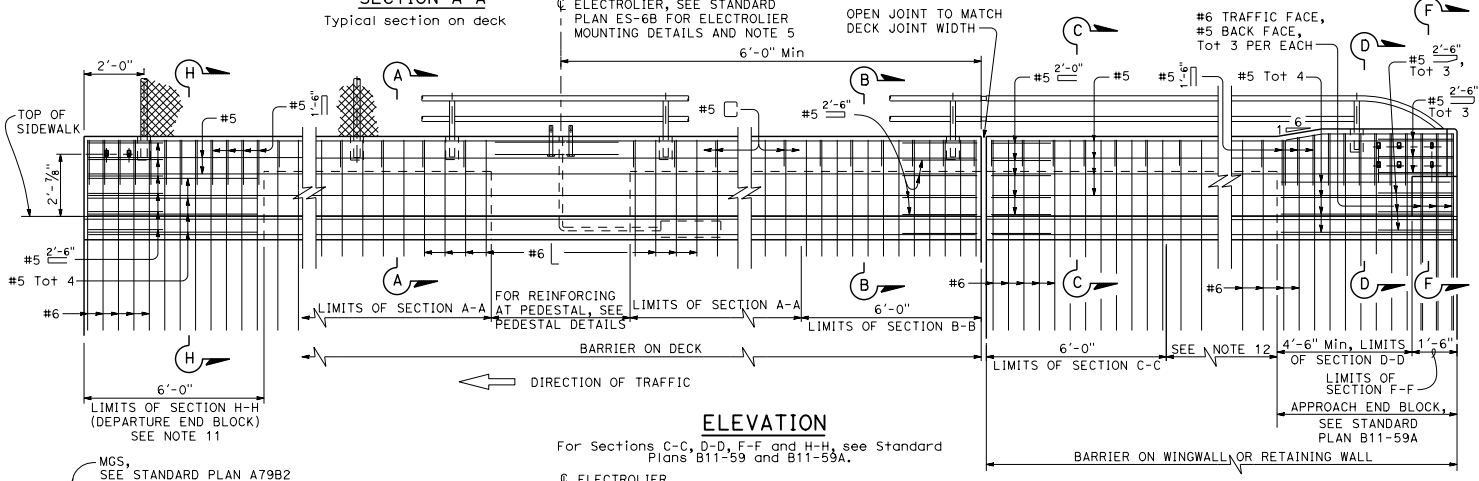

ELEVATION
For Sections C-C, D-D, F-F and H-H, see Standard Plans B11-59 and B11-59A.

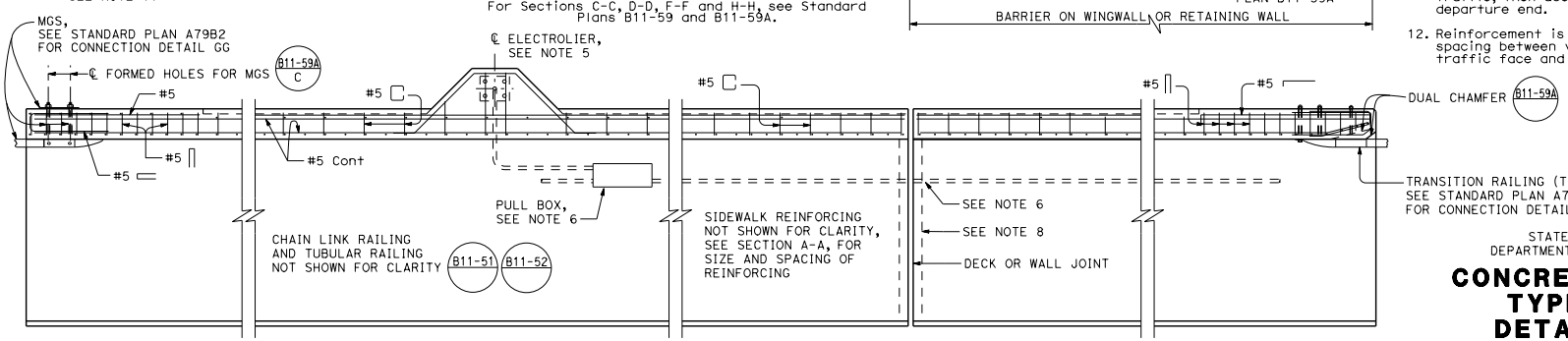

PLAN

NOTES:

1. This barrier is to be used only for posted speeds of 45 MPH or less. For speeds greater than 45 MPH, pedestrians must be protected by a separation traffic barrier.
2. Dimensions will vary with cross slope and if applicable, overlay thickness.
3. Walls must be backfilled before curb and parapet is placed.
4. Clearance to reinforcing steel in curb and railing is 2" except as noted. Longitudinal reinforcement to stop at all expansion joints.
5. See roadway plans for electrolier locations and pull box type.
6. For electrical details, see Standard Plans ES-9A, ES-9B, ES-9C, ES-9D, and ES-9E. For utility duct expansion fitting/coupling details, see Standard Plans ES-9B and B14-3.
7. A minimum of two - 4" round openings for future utilities. A maximum six - 4" round openings for a 6'-2" sidewalk. One - 4" round opening can be added for each additional 1'-0" of sidewalk width. Utility opening must be a minimum of 6" from face of barrier parapet. Openings are to be sealed at ends and extended 8" minimum past end of sidewalk if not used. Duct forms are to be tied down. For exact number and placement of utility openings, see Project Plans. Minimum 2" clear between round openings, ducts, or conduits.
8. See Project Plans for Joint Armor For Pedestrian Walkways details.
9. Tubular hand railing and chain link railing continuous at pedestal.
10. For details and reinforcement not shown, see Standard Plans B11-59 and B11-59A.
11. If departure end block is within the Clear Recovery Zone (CRZ, 30 feet for expressways and freeways, or 20 feet for conventional highways) of opposing traffic, then use the approach end block at departure end.
12. Reinforcement is similar to Section C-C, except spacing between vertical reinforcement is 8" at traffic face and 16" at back face of barrier.

STATE OF CALIFORNIA
DEPARTMENT OF TRANSPORTATION

CONCRETE BARRIER TYPE 732SW DETAILS No. 1

NO SCALE

B11-58

7-1-26

2026 STANDARD PLAN B11-58

Return to Table of Contents

Dist	COUNTY	ROUTE	POST MILES TOTAL PROJECT	SHEET No.	TOTAL SHEETS

REGISTERED CIVIL ENGINEER

September 18, 2026
PLANS APPROVAL DATE

REGISTERED PROFESSIONAL ENGINEER Aiman Malak No. C73369 Exp. 12-31-26 CIVIL STATE OF CALIFORNIA

THE STATE OF CALIFORNIA OR ITS OFFICERS OR AGENTS SHALL NOT BE RESPONSIBLE FOR THE ACCURACY OR COMPLETENESS OF SCANNED COPIES OF THIS PLAN SHEET.

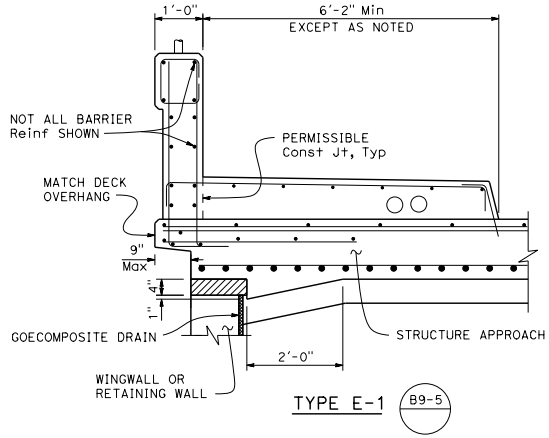

TYPE E-1 (B9-5)

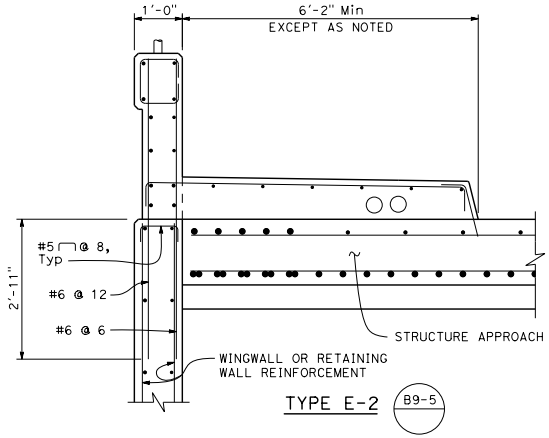

TYPE E-2 (B9-5)

SECTION C-C
WITH STRUCTURE APPROACH

NOTE: For details not shown, see Section B-B on Standard Plan B11-58.

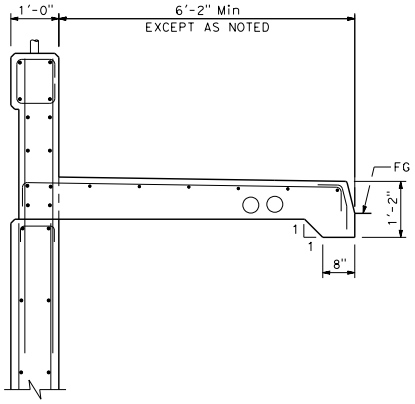

SECTION C-C
WITHOUT STRUCTURE APPROACH

NOTES:

1. For details not shown, see Standard Plan B11-58.
2. For location of Section C-C, Section D-D, and Section H-H, see Standard Plan B11-58.

LEGEND:

Expanded Polystyrene, remove after concrete is placed

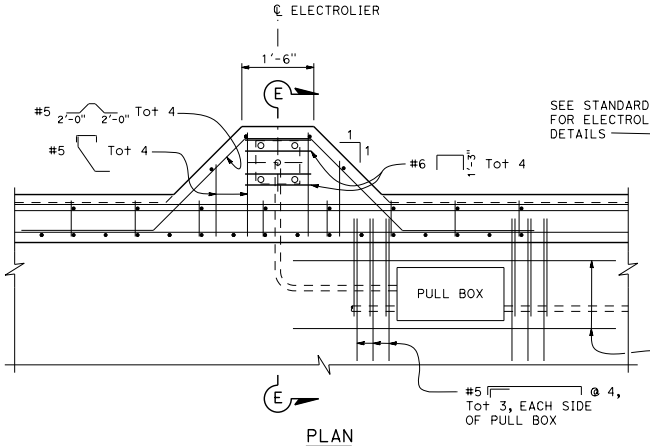

PLAN

NOTE:
For reinforcement not shown, see Section A-A on Standard Plan B11-58.

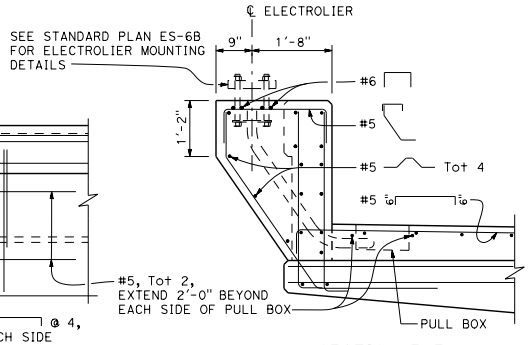

SECTION E-E

PEDESTAL DETAILS

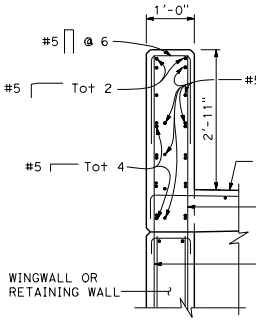

SECTION D-D
APPROACH END BLOCK

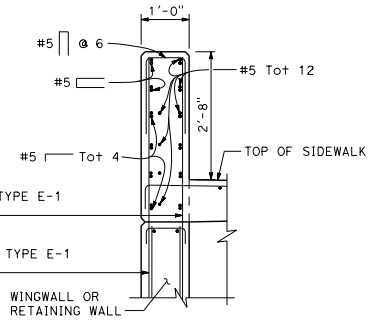

SECTION H-H
DEPARTURE END BLOCK

NOTE: For sidewalk, structure approach, wingwall or retaining wall, see Section C-C.

STATE OF CALIFORNIA
DEPARTMENT OF TRANSPORTATION

CONCRETE BARRIER TYPE 732SW DETAILS No. 2

NO SCALE

B11-59

2026 STANDARD PLAN B11-59

7-1-26

Return to Table of Contents

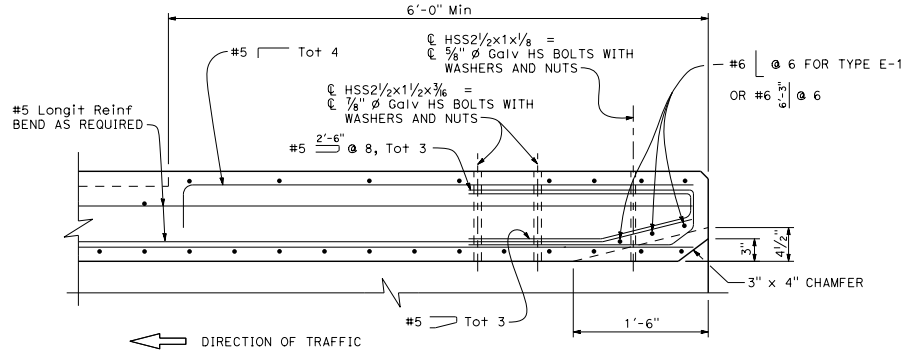

PLAN

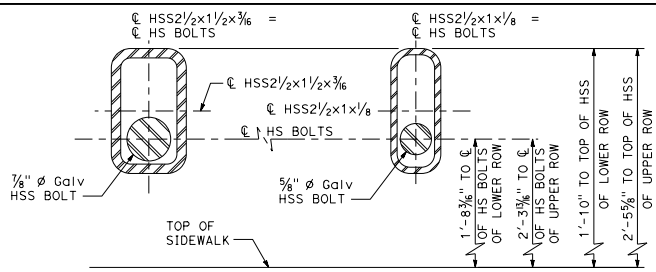

DETAIL A DETAIL B

APPROACH END BLOCK FORMED HOLES

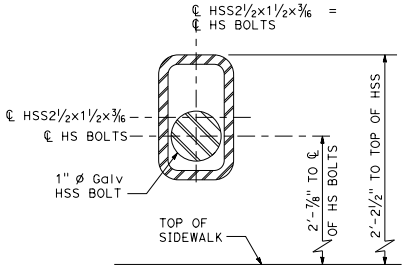

DETAIL C

DEPARTURE END BLOCK FORMED HOLES

Dist	COUNTY	ROUTE	POST MILES TOTAL PROJECT	SHEET No.	TOTAL SHEETS

REGISTERED CIVIL ENGINEER

September 18, 2026

PLANS APPROVAL DATE

REGISTERED PROFESSIONAL ENGINEER Aiman Malak No. C73369 Exp. 12-31-26 CIVIL STATE OF CALIFORNIA

THE STATE OF CALIFORNIA OR ITS OFFICERS OR AGENTS SHALL NOT BE RESPONSIBLE FOR THE ACCURACY OR COMPLETENESS OF SCANNED COPIES OF THIS PLAN SHEET.

NOTES:

1. Adjust reinforcement as needed to clear HSS sections by at least 1".
2. For departure end block details, see Standard Plan B11-58 and Section H-H on Standard Plan B11-59.

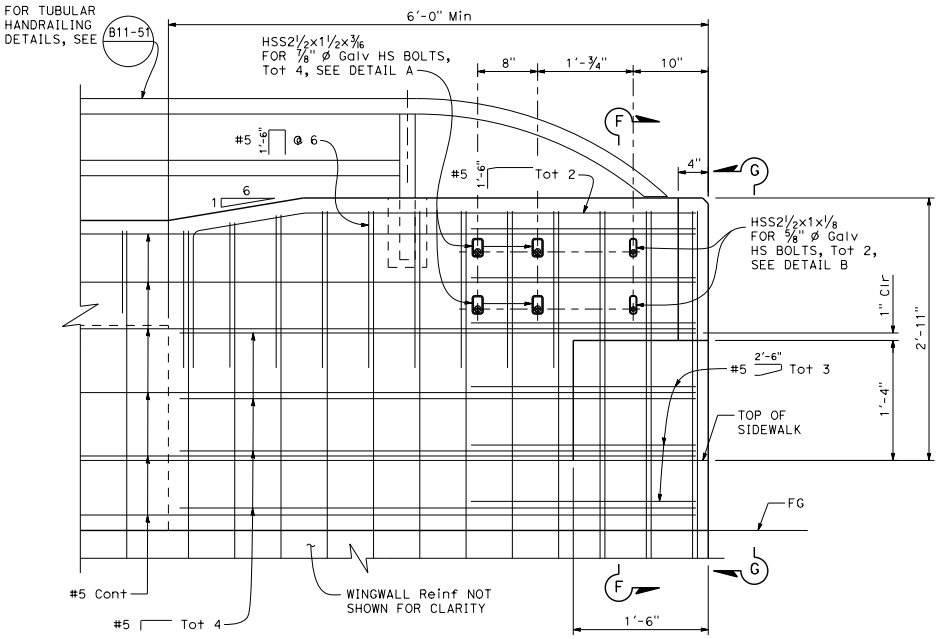

ELEVATION

APPROACH END BLOCK DETAILS

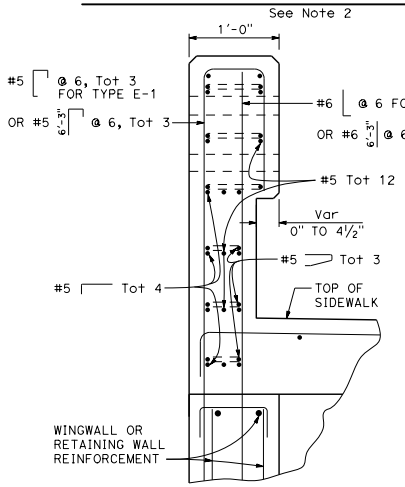

SECTION F-F

NOTE: For reinforcement not shown, see Section D-D on Standard Plan B11-59.

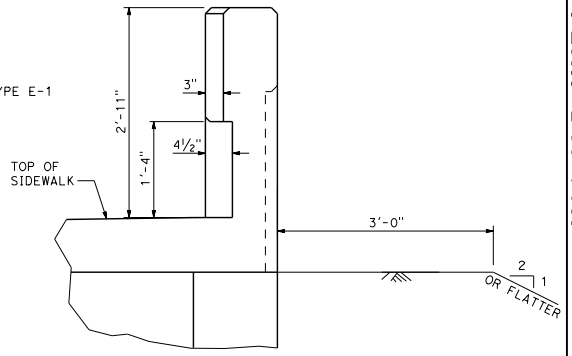

VIEW G-G

Handrailing not shown

STATE OF CALIFORNIA
DEPARTMENT OF TRANSPORTATION

CONCRETE BARRIER TYPE 732SW DETAILS No. 3

NO SCALE

B11-59A

7-1-26

Return to Table of Contents

Dist	COUNTY	ROUTE	POST MILES TOTAL PROJECT	SHEET No.	TOTAL SHEETS

REGISTERED CIVIL ENGINEER

September 18, 2026
PLANS APPROVAL DATE

REGISTERED PROFESSIONAL ENGINEER Aiman Malak No. C73369 Exp. 12-31-26 CIVIL STATE OF CALIFORNIA

THE STATE OF CALIFORNIA OR ITS OFFICERS OR AGENTS SHALL NOT BE RESPONSIBLE FOR THE ACCURACY OR COMPLETENESS OF SCANNED COPIES OF THIS PLAN SHEET.

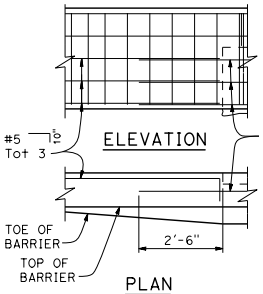

DETAIL A

Approach end block similar.

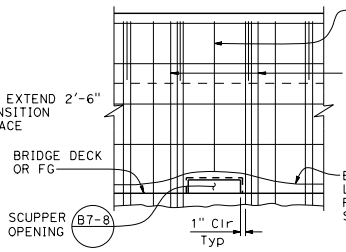

SCUPPER REINFORCEMENT DETAILS

If scupper is permitted on bridge

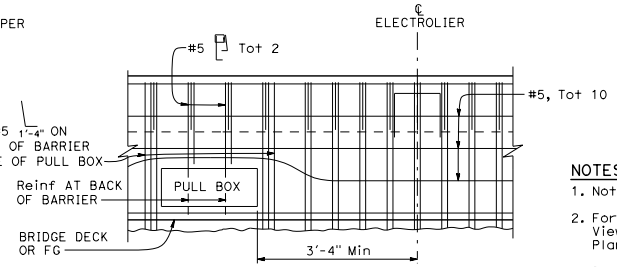

PULL BOX REINFORCEMENT DETAILS

NOTES:

1. Not all reinforcement shown for clarity.
2. For Section A-A, Section B-B, Section C-C, Section D-D, View E-E, Section F-F and Section G-G, see Standard Plan B11-80. For Section J-J, see Standard Plan B11-80A.
3. If departure end block is within the Clear Recovery Zone (CRZ, 30 feet for expressways and freeways and 20 feet for conventional highways) of opposing traffic, then use the approach end block at departure end.
4. Minimum clear spacing between scupper and deck or wall joint is 7'-0". Minimum clear spacing between scuppers is 10'-0".

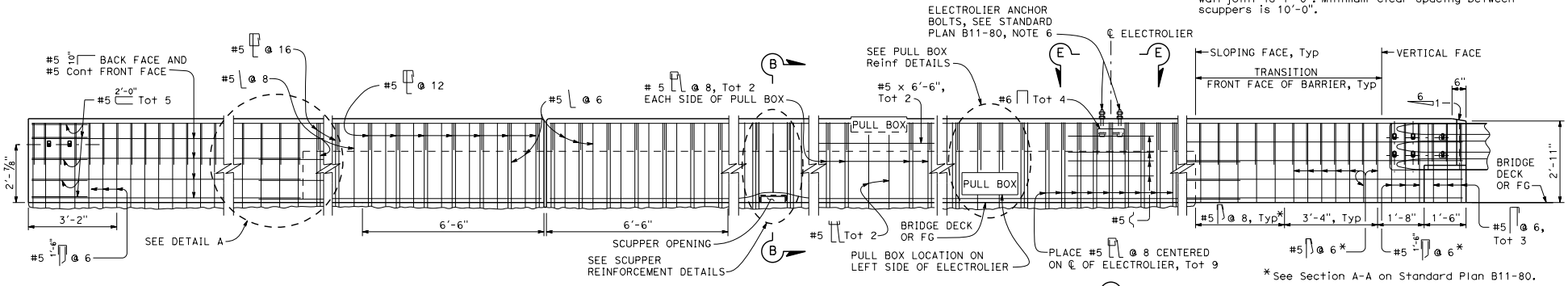

ELEVATION

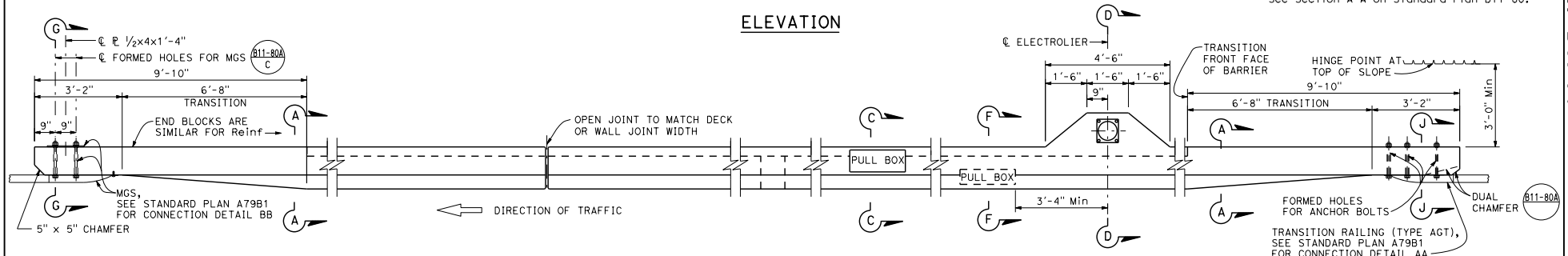

DEPARTURE END BLOCK

Rail element not shown for clarity

DECK OR WALL JOINT

SCUPPER DETAIL

PLAN

ELECTROLIER

See Note 5 on Standard Plan B11-80 for electrical details.

APPROACH END BLOCK

See Standard Plan B11-80A for additional Approach End Block Details.

STATE OF CALIFORNIA
DEPARTMENT OF TRANSPORTATION

CONCRETE BARRIER TYPE 836 DETAILS No. 1

NO SCALE

B11-79

7-1-26

2026 STANDARD PLAN B11-79

Return to Table of Contents

Dist	COUNTY	ROUTE	POST MILES TOTAL PROJECT	SHEET No.	TOTAL SHEETS

REGISTERED CIVIL ENGINEER

September 18, 2026

PLANS APPROVAL DATE

REGISTERED PROFESSIONAL ENGINEER Aiman Malak No. C73369 Exp. 12-31-26 CIVIL STATE OF CALIFORNIA

THE STATE OF CALIFORNIA OR ITS OFFICERS OR AGENTS SHALL NOT BE RESPONSIBLE FOR THE ACCURACY OR COMPLETENESS OF SCANNED COPIES OF THIS PLAN SHEET.

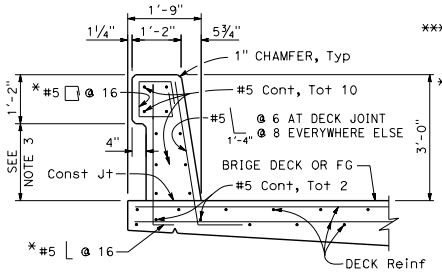

TYPE 836

*#5 @ 12 at deck joint

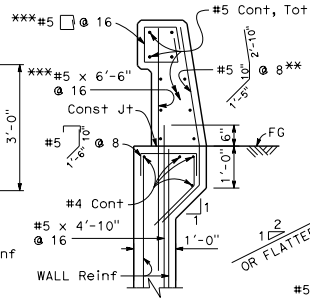

TYPE 836A

**#5 @ 6 at wall joint

***#5 @ 12 at wall joint

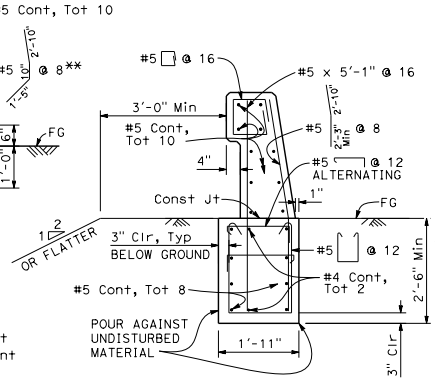

TYPE 836B

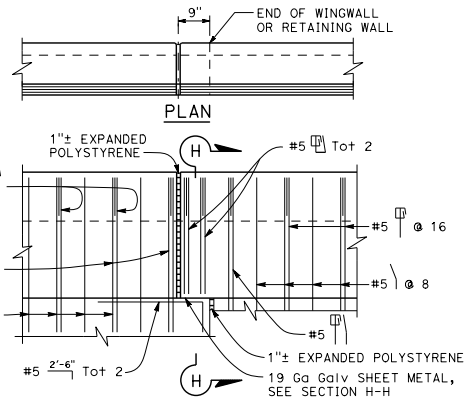

ELEVATION

TYPE 836A TYPE 836B

NOTE:
Type 836A and Type 836B are similar to Type 836 except as noted.

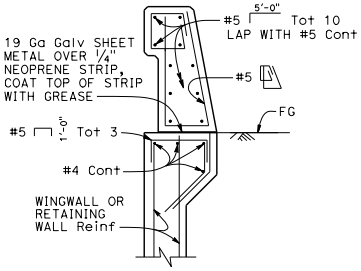

SECTION H-H

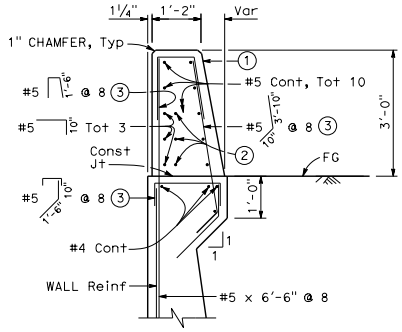

SECTION A-A

① Transition sloping face to vertical face.

② Extend lower reinforcement, total 3 at back face 2'-6" into transition. See Detail A on Standard Plan B11-79.

③ Spacing is 6" for 6'-6" of each barrier end.

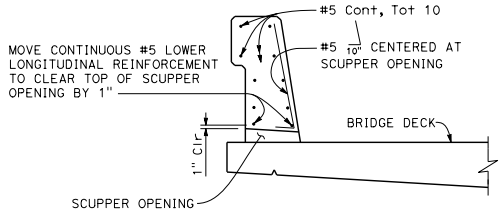

SECTION B-B

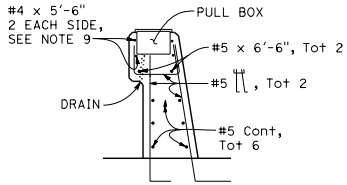

SECTION C-C

See Note 9

NOTES:

1. Walls shall be backfilled before barrier is placed.
2. Clearance to reinforcing steel in barrier shall be 2", except as noted. Longitudinal reinforcement to stop at all expansion joints.
3. Dimension from top of bridge deck to bottom of bridge rail haunch on backside of bridge rail may vary with roadway cross slope and with certain thicknesses of deck overlay if placed on the same contract, see bridge/roadway plans.
4. For typical metal railing connection details not shown, see Standard Plan A79B1.
5. See Standard Plans ES-9A, ES-9B, ES-9C, ES-9D, and ES-9E for electrical details. The maximum number of conduits in the barrier is limited to two 2" ø conduits along with one 3" ø conduit. When a 3" ø conduit is used, it is restricted to the base of the barrier.
6. For electrolier mounting details, see Standard Plans ES-6A and ES-6B.
7. Minimum concrete edge distance to the reinforcement shown shall be maintained. Edge distance may be adjusted to accommodate increase in concrete cover for architectural treatment on backside of bridge rail.
8. Minimum length of Concrete Barrier Type 836B is 40'-0".
9. In front and back of pull box (Section C-C), the #4 x 5'-6" bars must be centered on pull box. As an alternative 4 x 4 - W12 x W12 welded wire fabric extending minimum 8" beyond ends of pull box may be substituted.

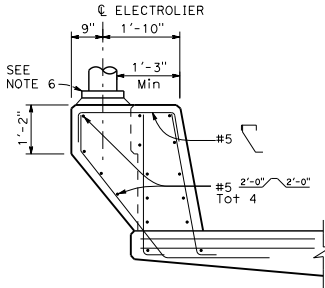

PEDESTAL ELEVATION

SECTION D-D

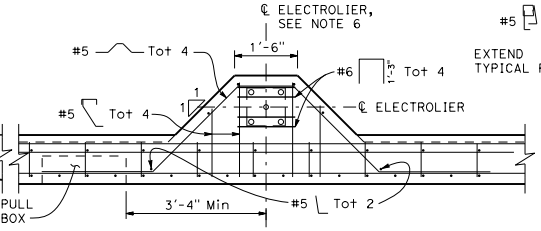

VIEW E-E

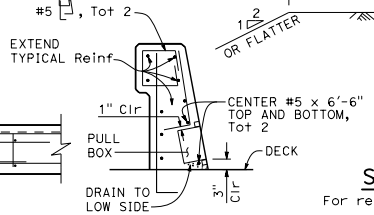

SECTION F-F

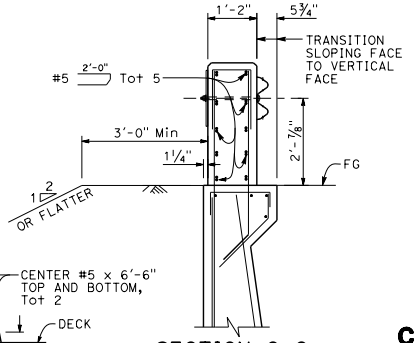

SECTION G-G

For reinforcement not shown, see Section A-A

STATE OF CALIFORNIA
DEPARTMENT OF TRANSPORTATION

CONCRETE BARRIER TYPE 836 DETAILS No. 2

NO SCALE

B11-80

7-1-26

Return to Table of Contents

Dist	COUNTY	ROUTE	POST MILES TOTAL PROJECT	SHEET No.	TOTAL SHEETS

REGISTERED CIVIL ENGINEER

September 18, 2026
PLANS APPROVAL DATE

REGISTERED PROFESSIONAL ENGINEER — Aiman Malak — No. C73369 — Exp. 12-31-26 — CIVIL — STATE OF CALIFORNIA

THE STATE OF CALIFORNIA OR ITS OFFICERS OR AGENTS SHALL NOT BE RESPONSIBLE FOR THE ACCURACY OR COMPLETENESS OF SCANNED COPIES OF THIS PLAN SHEET.

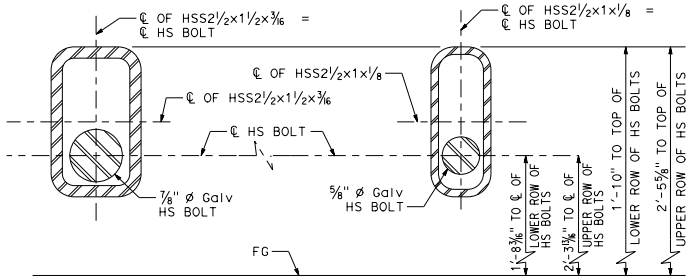

DETAIL A DETAIL B

APPROACH END BLOCK FORMED HOLES

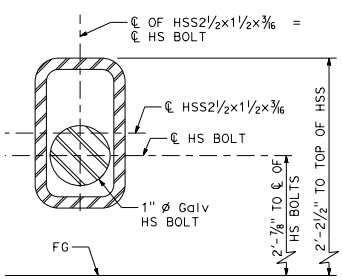

DETAIL C
See Note 2

DEPARTURE END BLOCK FORMED HOLE

NOTES:

1. Adjust reinforcement to clear HSS sections by at least 1".
2. For departure end block details, see Standard Plan B11-79.
3. For details and dimensions not shown, see Section A-A on Standard Plan B11-80.

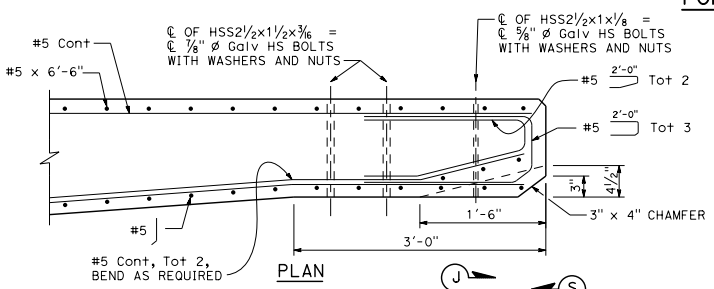

PLAN

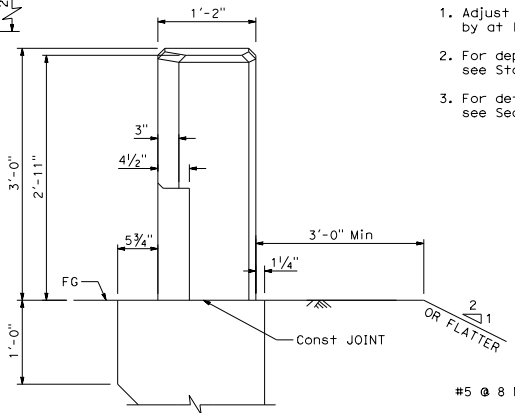

VIEW S-S

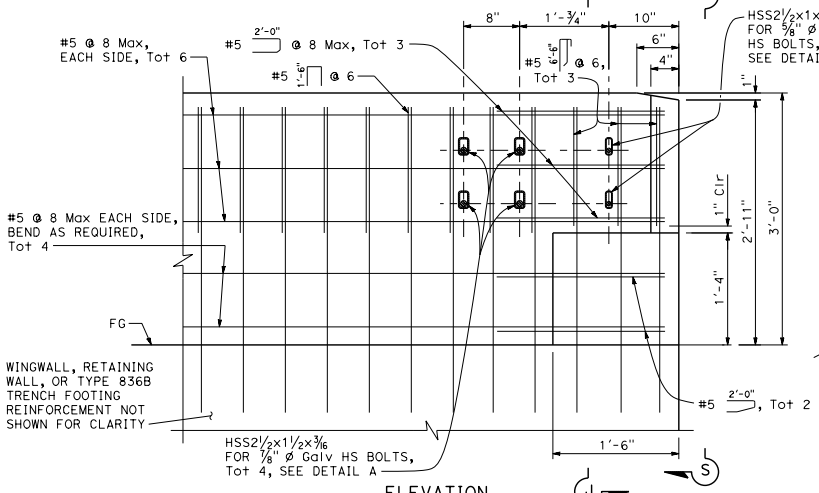

ELEVATION

APPROACH END BLOCK DETAIL

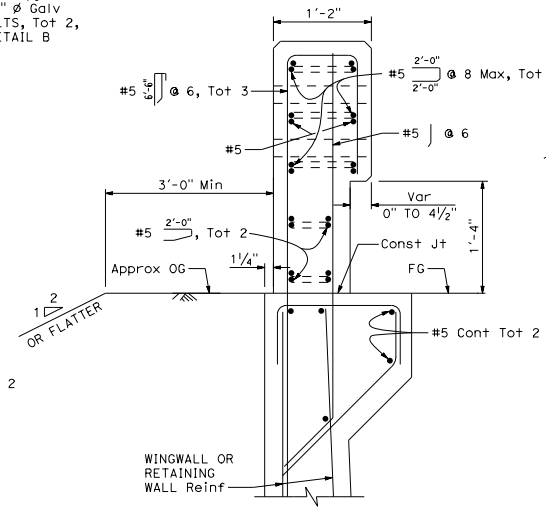

SECTION J-J
See Note 3

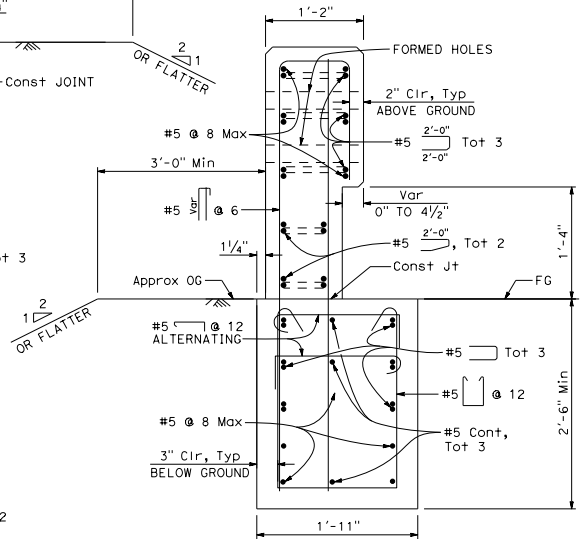

SECTION J-J
For Concrete Barrier Type 836B

STATE OF CALIFORNIA
DEPARTMENT OF TRANSPORTATION

CONCRETE BARRIER TYPE 836 DETAILS No. 3

NO SCALE

B11-80A

7-1-26

Return to Table of Contents

Dist	COUNTY	ROUTE	POST MILES TOTAL PROJECT	SHEET No.	TOTAL SHEETS

REGISTERED CIVIL ENGINEER

September 18, 2026

PLANS APPROVAL DATE

REGISTERED PROFESSIONAL ENGINEER Aiman Malak No. C73369 Exp. 12-31-26 CIVIL STATE OF CALIFORNIA

THE STATE OF CALIFORNIA OR ITS OFFICERS OR AGENTS SHALL NOT BE RESPONSIBLE FOR THE ACCURACY OR COMPLETENESS OF SCANNED COPIES OF THIS PLAN SHEET.

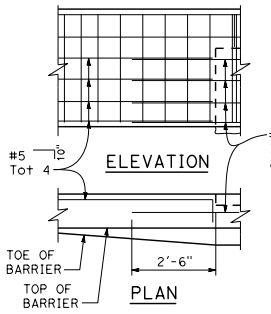

DETAIL A

Approach end block similar.

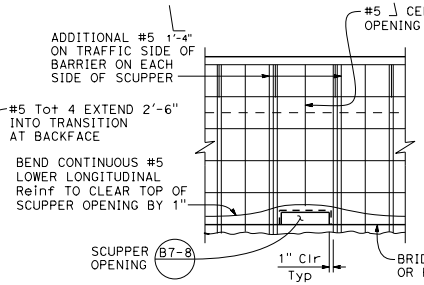

SCUPPER REINFORCEMENT DETAILS

If scupper is permitted on bridge

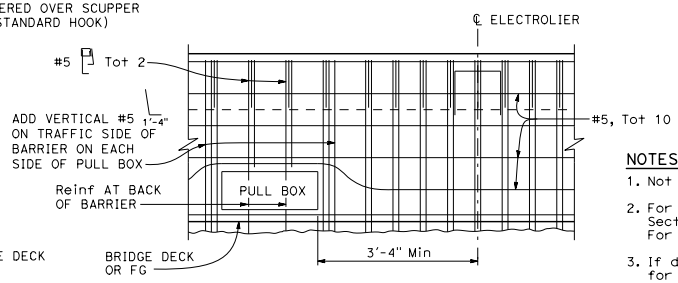

PULL BOX REINFORCEMENT DETAILS

NOTES:

1. Not all reinforcement shown for clarity.
2. For Section A-A, Section B-B, Section C-C, Section D-D, View E-E, Section F-F and Section G-G, see Standard Plan B11-82. For Section J-J, see Standard Plan B11-82A.
3. If departure end block is within the Clear Recovery Zone (CRZ, 30 feet for expressways and freeways and 20 feet for conventional highways) of opposing traffic, then use the approach end block at departure end.
4. Minimum clear spacing between scupper and deck or wall joint is 7'-0". Minimum clear spacing between scuppers is 10'-0".

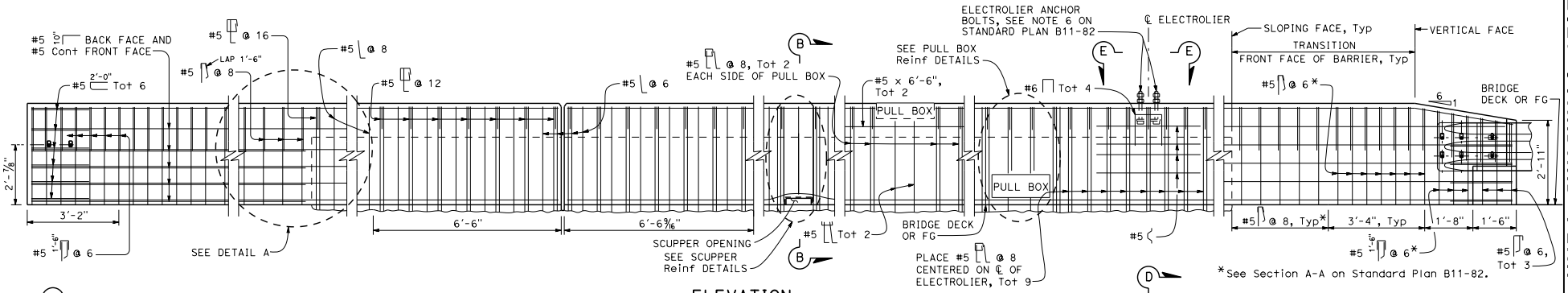

ELEVATION

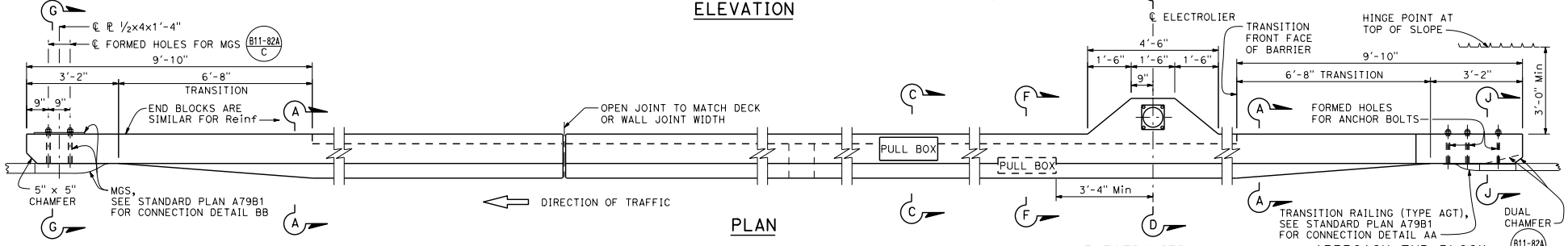

DEPARTURE END BLOCK

Rail element not shown for clarity

DECK OR WALL JOINT

PLAN

SCUPPER DETAIL

ELECTROLIER

See Note 5 on Standard Plan B11-82 for electrical details.

APPROACH END BLOCK

See Standard Plan B11-82A for additional Approach End Block Details.

STATE OF CALIFORNIA
DEPARTMENT OF TRANSPORTATION

CONCRETE BARRIER TYPE 842 DETAILS No. 1

NO SCALE

B11-81

7-1-26

2026 STANDARD PLAN B11-81

Return to Table of Contents

Dist	COUNTY	ROUTE	POST MILES TOTAL PROJECT	SHEET No.	TOTAL SHEETS

REGISTERED CIVIL ENGINEER

September 18, 2026

PLANS APPROVAL DATE

REGISTERED PROFESSIONAL ENGINEER Aiman Malak No. C73369 Exp. 12-31-26 CIVIL STATE OF CALIFORNIA

THE STATE OF CALIFORNIA OR ITS OFFICERS OR AGENTS SHALL NOT BE RESPONSIBLE FOR THE ACCURACY OR COMPLETENESS OF SCANNED COPIES OF THIS PLAN SHEET.

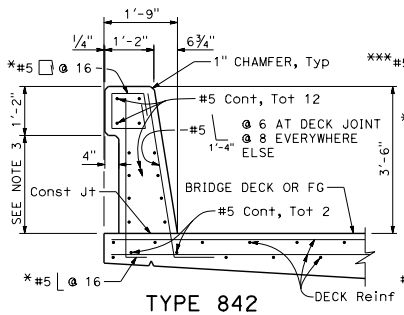

TYPE 842

*#5 @ 12 at deck joint

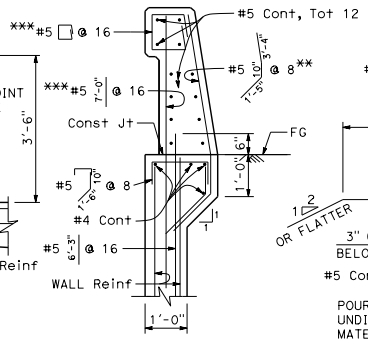

TYPE 842A

**#5 @ 6 at wall joint

***#5 @ 12 at wall joint

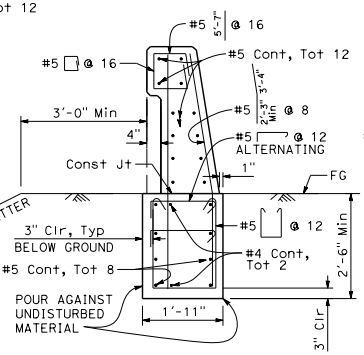

TYPE 842B

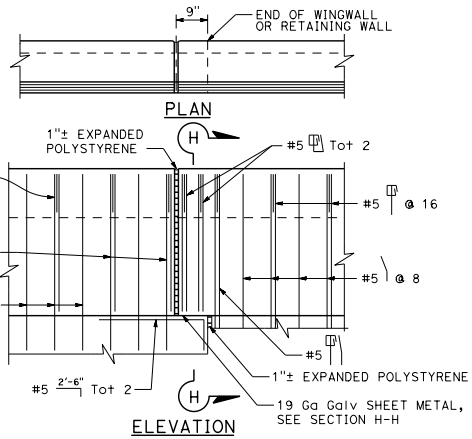

ELEVATION

TYPE 842A TYPE 842B

NOTE:
Type 842A and Type 842B are similar to Type 842 except as noted.

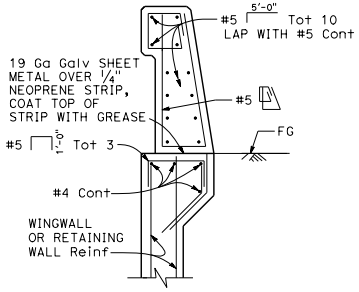

SECTION H-H

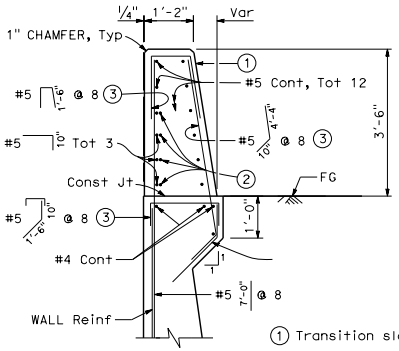

SECTION A-A

① Transition sloping face to vertical face.

② Extend lower reinforcement, total 4 at back face 2'-6" into transition. See Detail A on Standard Plan B11-81.

③ Spacing is 6" for 6'-6" of each barrier end.

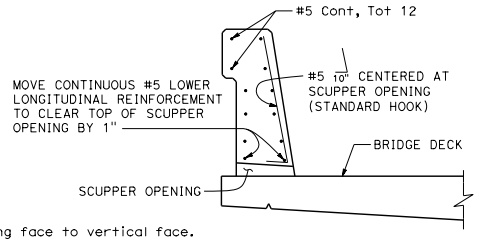

SECTION B-B

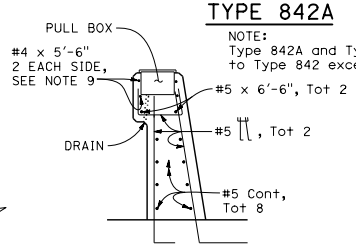

SECTION C-C

See Note 9

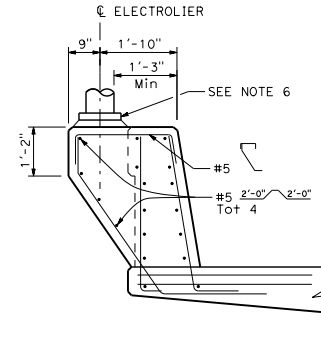

PEDESTAL ELEVATION

SECTION D-D

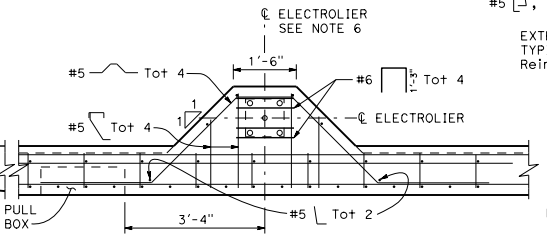

VIEW E-E

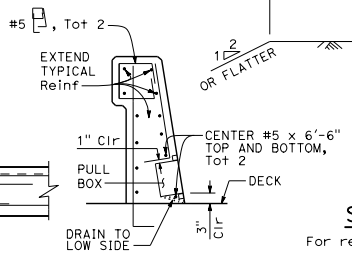

SECTION F-F

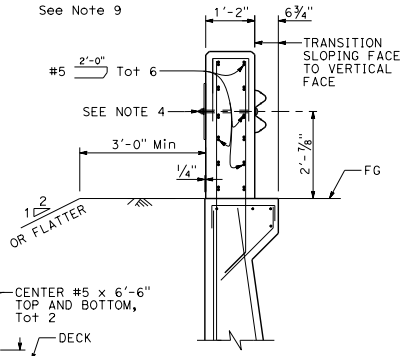

SECTION G-G

For reinforcement not shown, see Section A-A

NOTES:

1. Walls shall be backfilled before barrier is placed.
2. Clearance to reinforcing steel in barrier shall be 2", except as noted. Longitudinal reinforcement to stop at all expansion joints.
3. Dimension from top of bridge deck to bottom of bridge rail haunch on backside of bridge rail may vary with roadway cross slope and with certain thicknesses of deck overlay if placed on the same contract, see bridge/roadway plans.
4. For typical metal railing connection details not shown, see Standard Plan A79B1.
5. See Standard Plans ES-9A, ES-9B, ES-9C, ES-9D, and ES-9E for electrical details. The maximum number of conduits in the barrier is limited to two 2" Ø conduits along with one 3" Ø conduit. When a 3" Ø conduit is used, it is restricted to the base of the barrier.
6. For electrolier mounting details, see Standard Plans ES-6A and ES-6B.
7. Minimum concrete edge distance to the reinforcement shown shall be maintained. Edge distance may be adjusted to accommodate increase in concrete cover for architectural treatment on backside of bridge rail.
8. Minimum length of Concrete Barrier Type 842B is 40'-0".
9. In front and back of pull box (Section C-C), the #4 x 5'-6" bars must be centered on pull box. As an alternative 4 x 4 - W12 x W12 welded wire fabric extending minimum 8" beyond ends of pull box may be substituted.

STATE OF CALIFORNIA
DEPARTMENT OF TRANSPORTATION

CONCRETE BARRIER TYPE 842 DETAILS No. 2

NO SCALE

B11-82

7-1-26

Return to Table of Contents

Dist	COUNTY	ROUTE	POST MILES TOTAL PROJECT	SHEET No.	TOTAL SHEETS

REGISTERED CIVIL ENGINEER

September 18, 2026
PLANS APPROVAL DATE

REGISTERED PROFESSIONAL ENGINEER
Aiman Malak
No. C73369
Exp. 12-31-26
CIVIL
STATE OF CALIFORNIA

THE STATE OF CALIFORNIA OR ITS OFFICERS OR AGENTS SHALL NOT BE RESPONSIBLE FOR THE ACCURACY OR COMPLETENESS OF SCANNED COPIES OF THIS PLAN SHEET.

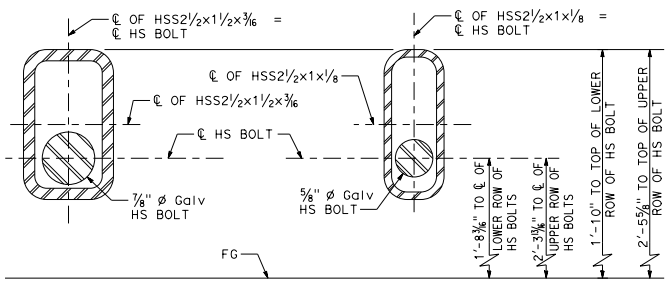

DETAIL A DETAIL B

APPROACH END BLOCK FORMED HOLES

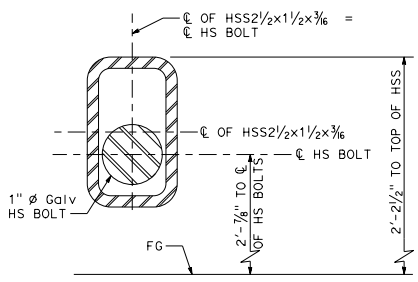

DETAIL C

DEPARTURE END BLOCK FORMED HOLE

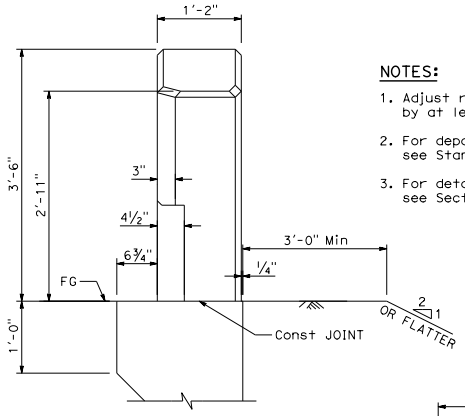

VIEW S-S

NOTES:

1. Adjust reinforcement to clear HSS sections by at least 1".
2. For departure end block details, see Standard Plan B11-81.
3. For details and dimensions not shown, see Section A-A on Standard Plan B11-82.

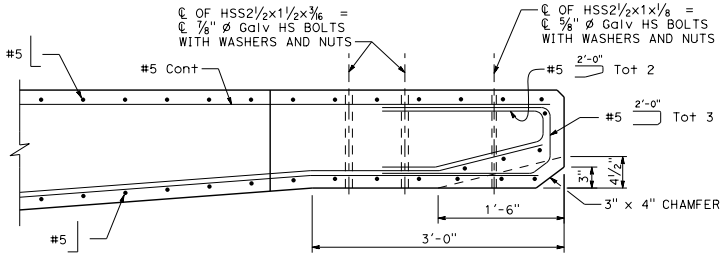

PLAN

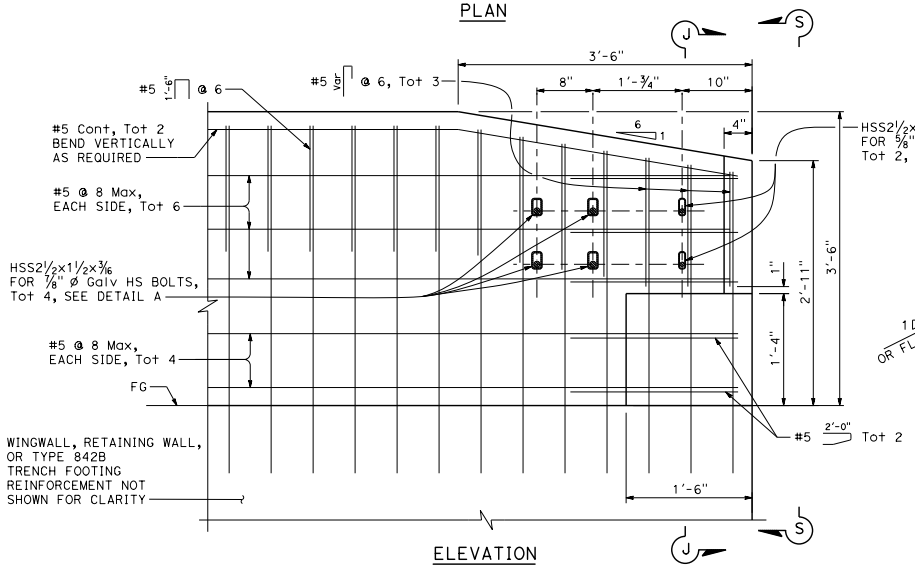

ELEVATION

APPROACH END BLOCK DETAILS

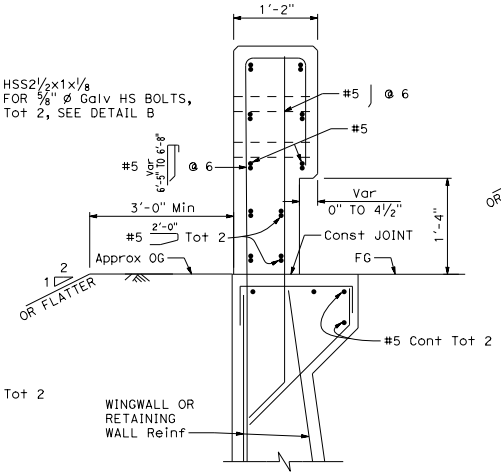

SECTION J-J

For reinforcement not shown, see Section A-A on Standard Plan B11-82.

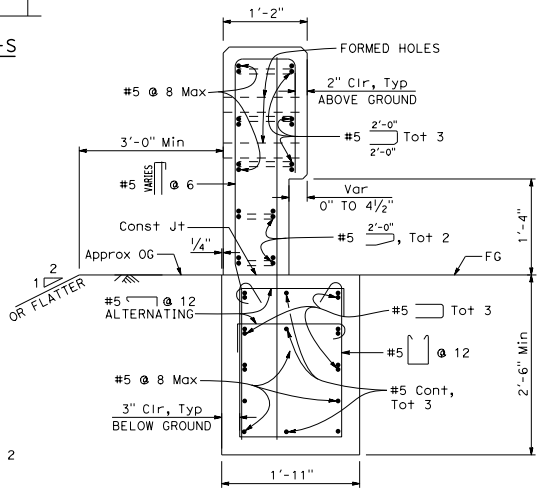

SECTION J-J

For Concrete Barrier Type 842B

STATE OF CALIFORNIA
DEPARTMENT OF TRANSPORTATION

CONCRETE BARRIER TYPE 842 DETAILS No. 3

NO SCALE

B11-82A

2026 STANDARD PLAN B11-82A

7-1-26

Return to Table of Contents

Dist	COUNTY	ROUTE	POST MILES TOTAL PROJECT	SHEET No.	TOTAL SHEETS

REGISTERED CIVIL ENGINEER

September 18, 2026

PLANS APPROVAL DATE

REGISTERED PROFESSIONAL ENGINEER Aiman Malak No. C73369 Exp. 12-31-26 CIVIL STATE OF CALIFORNIA

THE STATE OF CALIFORNIA OR ITS OFFICERS OR AGENTS SHALL NOT BE RESPONSIBLE FOR THE ACCURACY OR COMPLETENESS OF SCANNED COPIES OF THIS PLAN SHEET.

* Dimension must be 1'-0" above top of Bridge Deck or FG (including overlay). Increase lower beam (curb) height by 2" Max to match overlay depth.

** Dimension from top of bridge deck to top of backside of lower beam (curb) is determined by bridge cross slope and by thickness of deck overlay due to increase in lower beam (curb) height by 2" Max to match overlay depth if placed on the same contract.

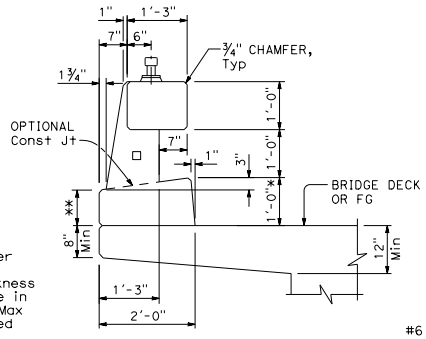

TYPICAL SECTION

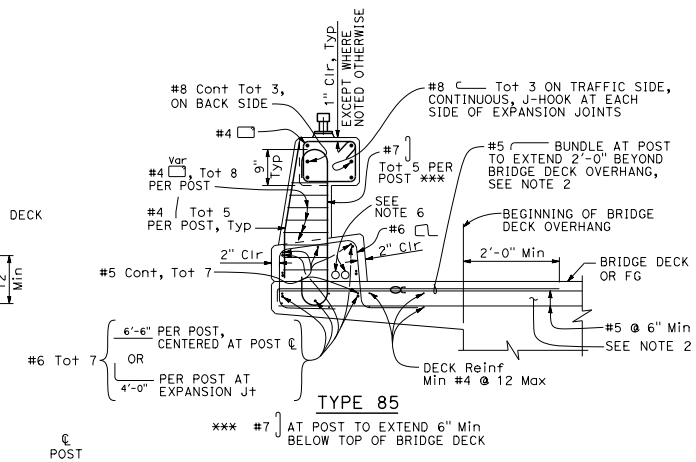

TYPE 85

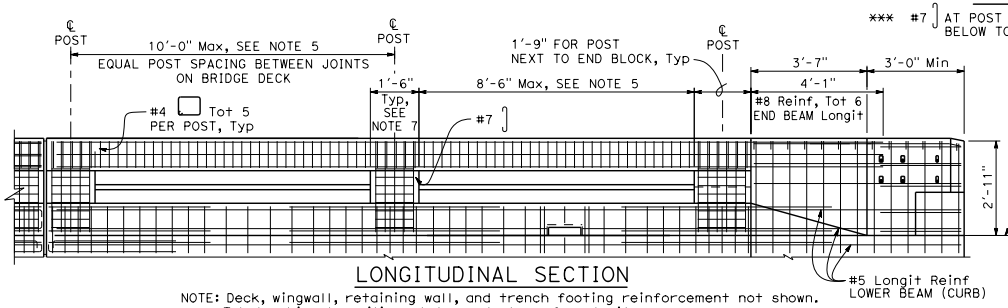

LONGITUDINAL SECTION

NOTE: Deck, wingwall, retaining wall, and trench footing reinforcement not shown. Tubular bicycle railing at top not shown for clarity.

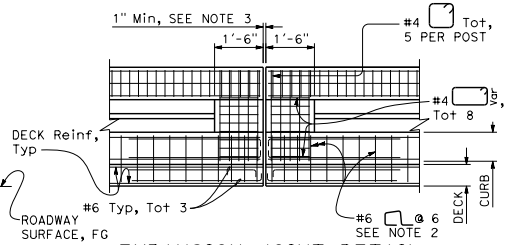

EXPANSION JOINT DETAIL

NOTE: Not all reinforcement shown.

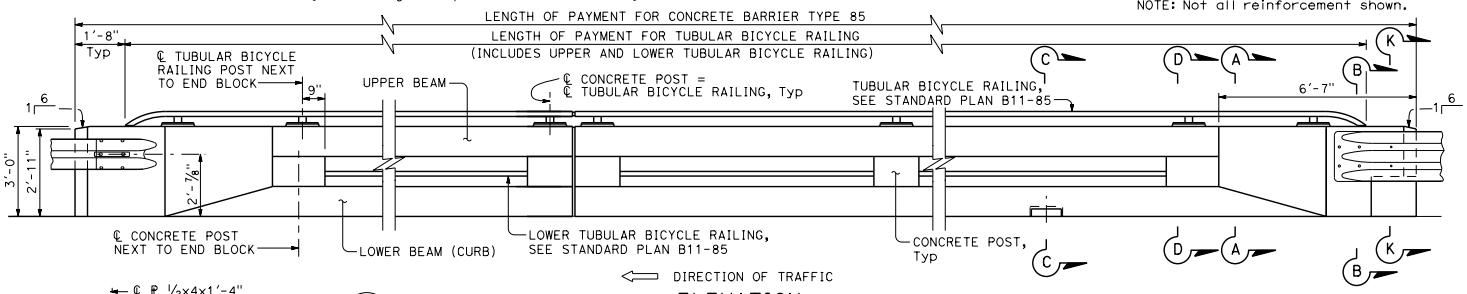

ELEVATION

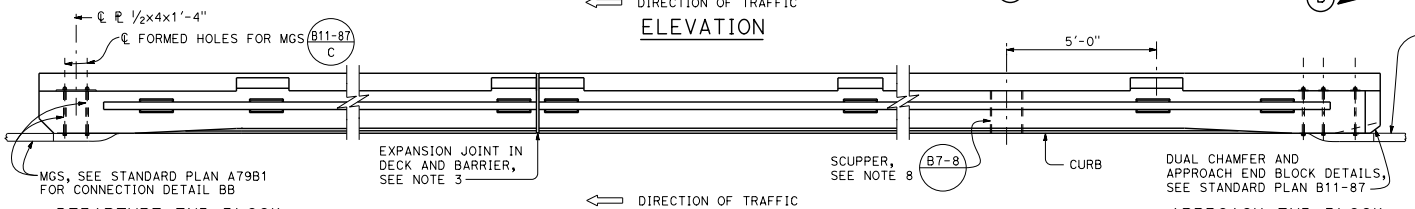

DEPARTURE END BLOCK

See Note 1

PLAN

APPROACH END BLOCK

NOTES:

1. If departure end block is within the Clear Recovery Zone (CRZ) of opposing traffic (30 feet for expressways and freeways, and 20 feet for conventional highways), use the approach end block detail for the departure end.
2. For additional reinforcement details, see Standard Plan B11-84.
3. Barrier expansion joint to match deck joint, 1" minimum.
4. Splicing in longitudinal rail reinforcing must be staggered. Lap splices must be completely outside the limits of concrete post. Butt welds are an acceptable alternative to lap splicing #8 bars.
5. Maximize post spacing, not to exceed 10'-0", while spacing posts equally between bridge joints.
6. The maximum number of conduits is limited to two 1½" ø and must be placed in front half of the lower beam (curb). See also Conduit in Bridge Railing detail on Standard Plan B14-3.
7. Width of concrete post supporting electrolier pedestal is 1'-8", see Standard Plan B11-86 for additional details.
8. Scupper and pull box can only be placed at mid-points between concrete posts. Scupper and pull box cannot both be located between the same two concrete posts. Neither scupper nor pull box can be located between concrete posts where one of those posts is adjacent to an expansion joint. Bend conduits around scupper, for scupper details, see Section C-C on Standard Plan B11-84.
9. For Section A-A, Section B-B, and Section D-D, see Standard Plan B11-83A. For Section C-C, see Standard Plan B11-84. For Section K-K, see Standard Plan B11-87.

STATE OF CALIFORNIA
DEPARTMENT OF TRANSPORTATION

CONCRETE BARRIER TYPE 85 DETAILS No. 1

NO SCALE

B11-83

2026 STANDARD PLAN B11-83

7-1-26

Return to Table of Contents

Dist	COUNTY	ROUTE	POST MILES TOTAL PROJECT	SHEET No.	TOTAL SHEETS

REGISTERED CIVIL ENGINEER

September 18, 2026
PLANS APPROVAL DATE

REGISTERED PROFESSIONAL ENGINEER
Aiman Malak
No. C73369
Exp. 12-31-26
CIVIL
STATE OF CALIFORNIA

THE STATE OF CALIFORNIA OR ITS OFFICERS OR AGENTS SHALL NOT BE RESPONSIBLE FOR THE ACCURACY OR COMPLETENESS OF SCANNED COPIES OF THIS PLAN SHEET.

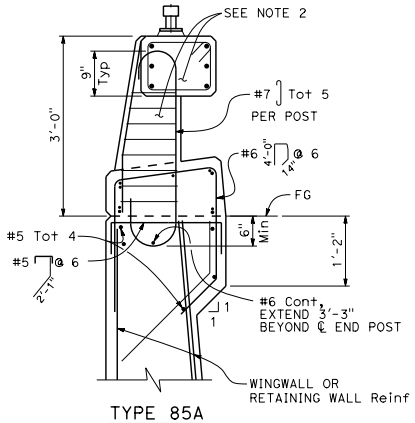

TYPE 85A

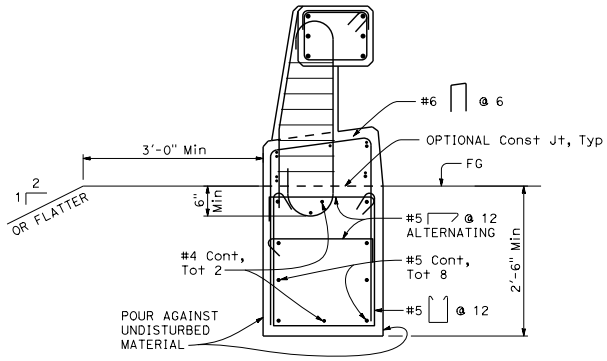

TYPE 85B
See Note 1

NOTES:

1. 40'-0" minimum length for Type 85B.
2. For details not shown, see Standard Plans B11-83 and B11-84.
3. Section D-D is 1'-9" long as shown, only the reinforcement for post transition is shown.
4. For additional approach end block details, see Standard Plan B11-87.

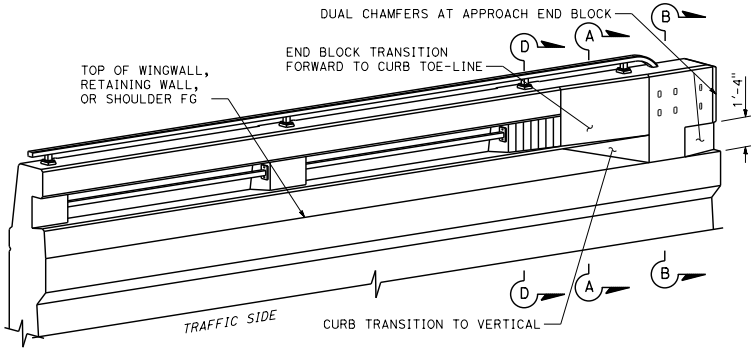

ISOMETRIC VIEW OF POST FACE TRANSITION TO END BLOCK AND DUAL END BLOCK CHAMFER

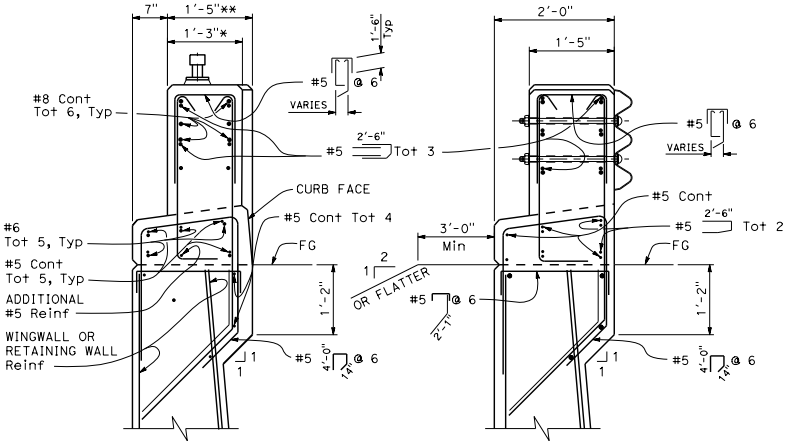

SECTION A-A

* BEGIN BARRIER TRANSITION
** END BARRIER TRANSITION

SECTION B-B

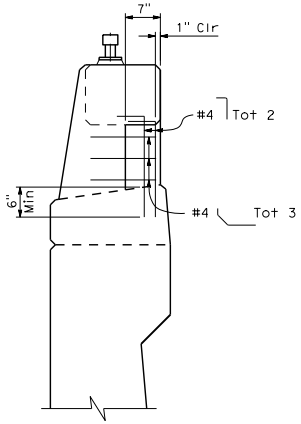

SECTION D-D

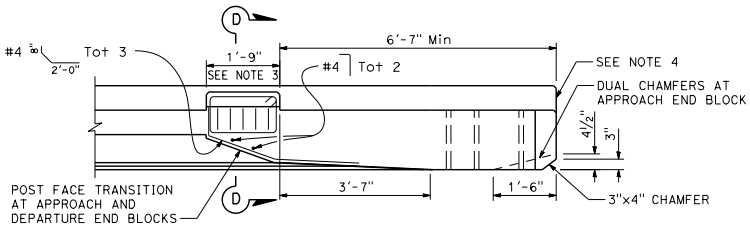

END BLOCK AND ADJACENT POST TRANSITION

STATE OF CALIFORNIA
DEPARTMENT OF TRANSPORTATION

CONCRETE BARRIER TYPE 85
DETAILS No. 2

NO SCALE

B11-83A

2026 STANDARD PLAN B11-83A

7-1-26

Return to Table of Contents

Dist	COUNTY	ROUTE	POST MILES TOTAL PROJECT	SHEET No.	TOTAL SHEETS

REGISTERED CIVIL ENGINEER

September 18, 2026

PLANS APPROVAL DATE

REGISTERED PROFESSIONAL ENGINEER Aiman Malak No. C73369 Exp. 12-31-26 CIVIL STATE OF CALIFORNIA

THE STATE OF CALIFORNIA OR ITS OFFICERS OR AGENTS SHALL NOT BE RESPONSIBLE FOR THE ACCURACY OR COMPLETENESS OF SCANNED COPIES OF THIS PLAN SHEET.

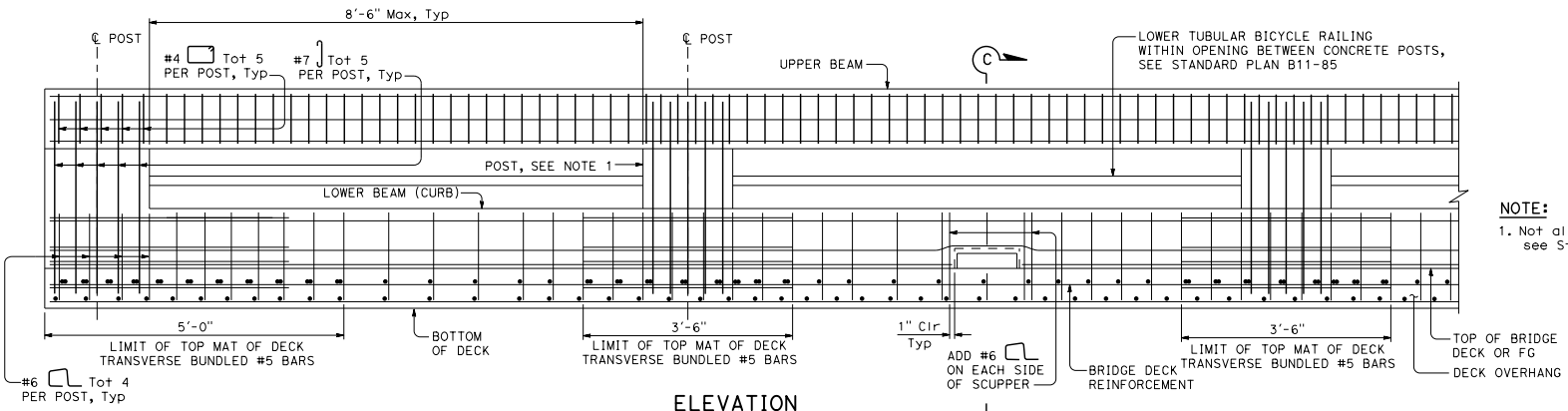

ELEVATION

NOTE: Upper tubular bicycle railing not shown for clarity.

NOTE:

1. Not all post reinforcement is shown for clarity, see Standard Plan B11-83 for additional details.

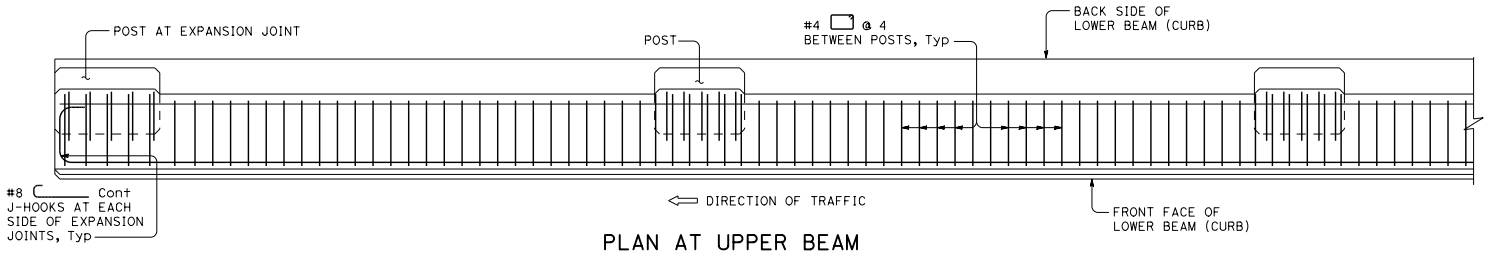

PLAN AT UPPER BEAM

NOTE: Upper tubular bicycle railing not shown for clarity.

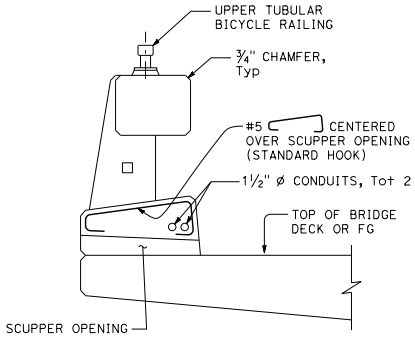

SECTION C-C

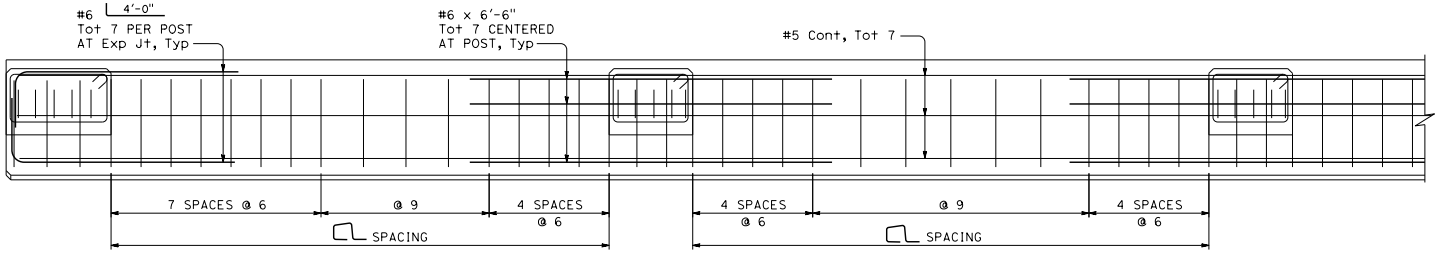

PLAN AT LOWER BEAM (CURB)

STATE OF CALIFORNIA
DEPARTMENT OF TRANSPORTATION

CONCRETE BARRIER TYPE 85 DETAILS No. 3

NO SCALE

B11-84

2026 STANDARD PLAN B11-84

7-1-26

Return to Table of Contents

Dist	COUNTY	ROUTE	POST MILES TOTAL PROJECT	SHEET No.	TOTAL SHEETS

REGISTERED CIVIL ENGINEER

September 18, 2026
PLANS APPROVAL DATE

REGISTERED PROFESSIONAL ENGINEER Aiman Malak No. C73369 Exp. 12-31-26 CIVIL STATE OF CALIFORNIA

THE STATE OF CALIFORNIA OR ITS OFFICERS OR AGENTS SHALL NOT BE RESPONSIBLE FOR THE ACCURACY OR COMPLETENESS OF SCANNED COPIES OF THIS PLAN SHEET.

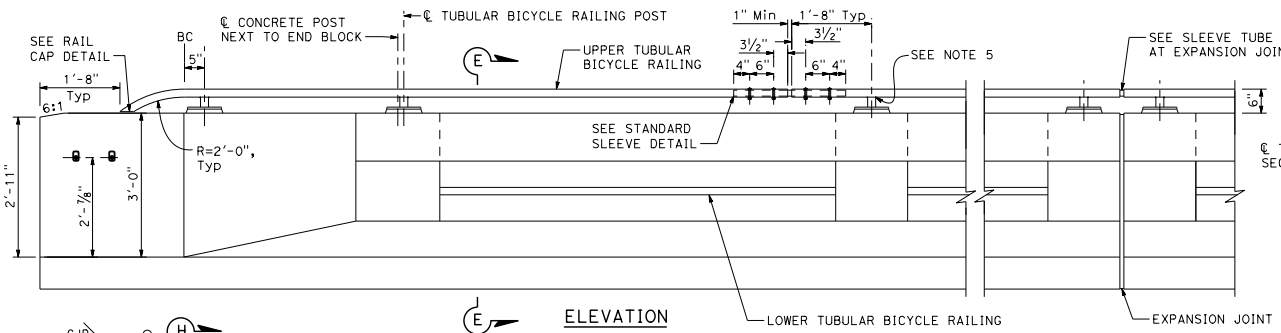

ELEVATION

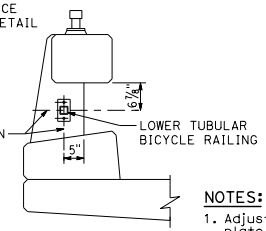

SECTION E-E

NOTES:

1. Adjust mortar pad thickness so that the base plate is level in the transverse cross sectional view, and is parallel to the top of the upper beam (parallel to profile grade) in the longitudinal direction.
2. Tube splices shall be located in the tubes spanning deck or wall joints. Increase joint width in tubes to match expansion joint width and increase sleeve length accordingly.
3. Upper tubular bicycle railing shall be continuous over not less than two posts.
4. Use HS bolt ½" ø x 3⅝" with nut and washers, snug tightened, with thread locking mechanism.
5. Welded connection details between tubular bicycle railing and HSS2x2x3/16 post is shown. For bolted connection details, see Railing Connection Details on Standard Plan B11-220.

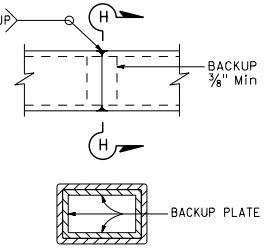

SECTION H-H

ALTERNATIVE TUBE WELDED STANDARD SPLICE

NOTE: For splices not at expansion joints.

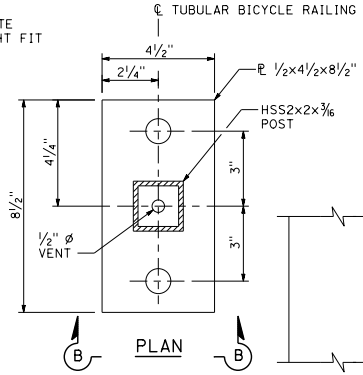

PLAN

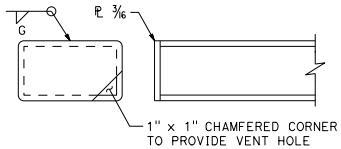

RAIL CAP DETAIL

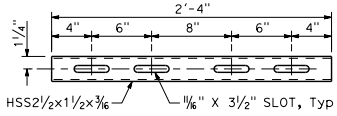

STANDARD SLEEVE DETAIL

See Note 4

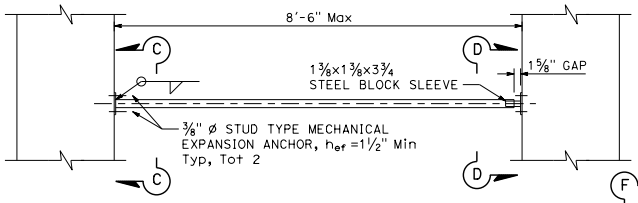

LOWER TUBULAR BICYCLE RAILING DETAIL

h_{ef} = Effective Embedment Depth

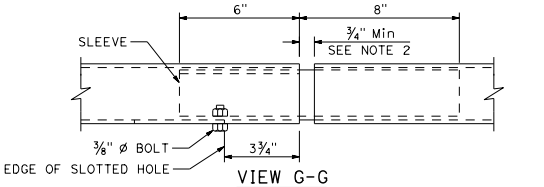

VIEW G-G

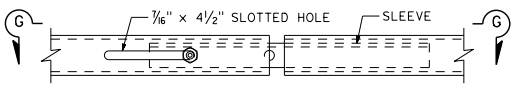

VIEW F-F

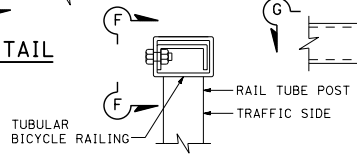

SECTION AT SLEEVE TUBE SPLICE AT EXPANSION JOINT

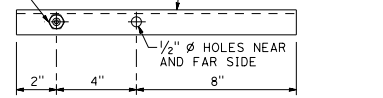

SLEEVE TUBE SPLICE AT EXPANSION JOINT DETAIL

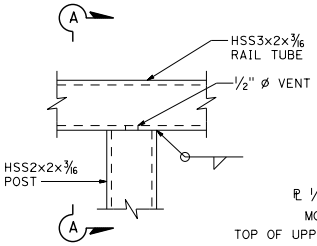

ELEVATION

See Note 5

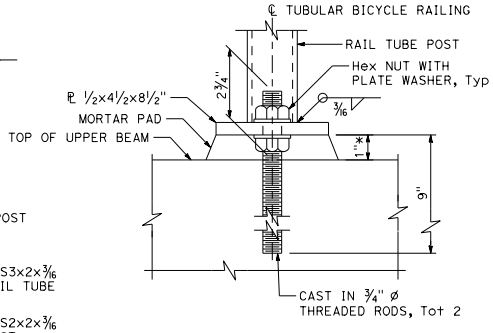

SECTION B-B

* See Note 1

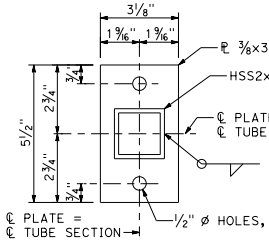

SECTION C-C

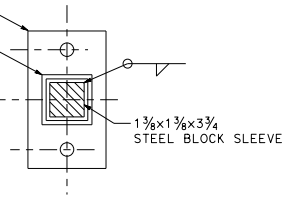

SECTION D-D

See Section C-C for details not shown.

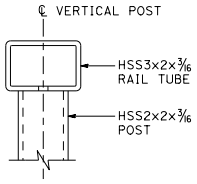

SECTION A-A

TUBULAR BICYCLE RAILING DETAILS

STATE OF CALIFORNIA
DEPARTMENT OF TRANSPORTATION

CONCRETE BARRIER TYPE 85 DETAILS No. 4

NO SCALE

B11-85

7-1-26

Return to Table of Contents

Dist	COUNTY	ROUTE	POST MILES TOTAL PROJECT	SHEET No.	TOTAL SHEETS

REGISTERED CIVIL ENGINEER

September 18, 2026

PLANS APPROVAL DATE

REGISTERED PROFESSIONAL ENGINEER Aiman Malak No. C73369 Exp. 12-31-26 CIVIL STATE OF CALIFORNIA

THE STATE OF CALIFORNIA OR ITS OFFICERS OR AGENTS SHALL NOT BE RESPONSIBLE FOR THE ACCURACY OR COMPLETENESS OF SCANNED COPIES OF THIS PLAN SHEET.

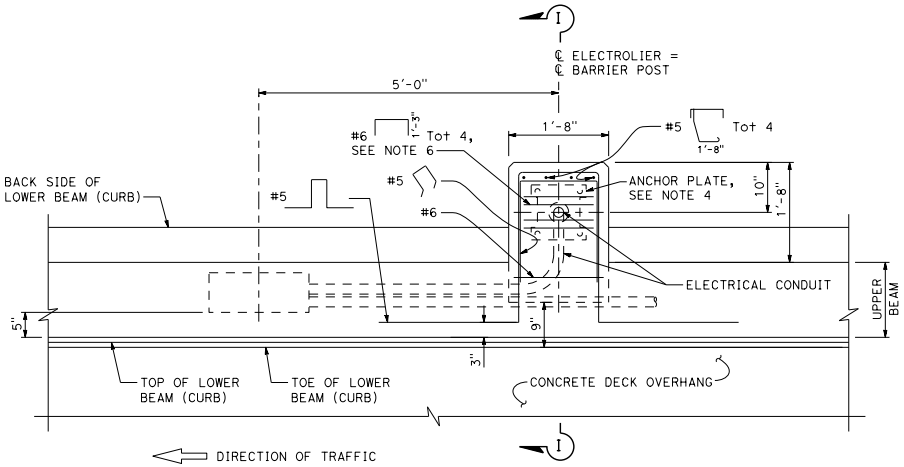

PLAN

See Note 1

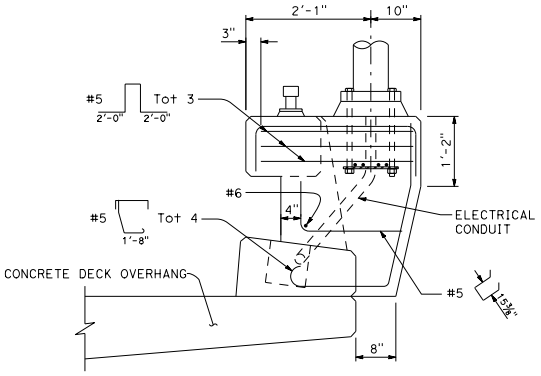

SECTION I-I

See Note 4

NOTES:

1. See Project Plans for electrolier and pull box locations.
2. For electrical details, see Standard Plans ES-9A, ES-9B, ES-9C, ES-9D, and ES-9E.
3. Only the additional reinforcing for the electrolier pedestal is shown. For other typical reinforcing for Type 85 Barrier, see Standard Plans B11-83, B11-83A, and B11-84.
4. For electrolier mounting details, see Standards Plans ES-6A and ES-6B.
5. Bend #5 reinforcement in curb as required to clear pull box.
6. Place #6 reinforcement to clear conduit and anchor bolts.

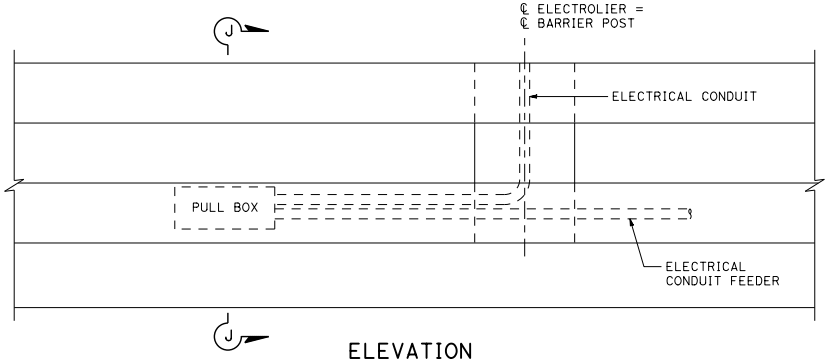

ELEVATION

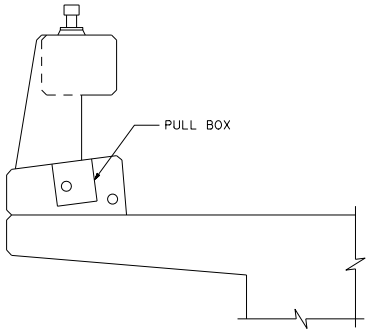

SECTION J-J

At pull box if required

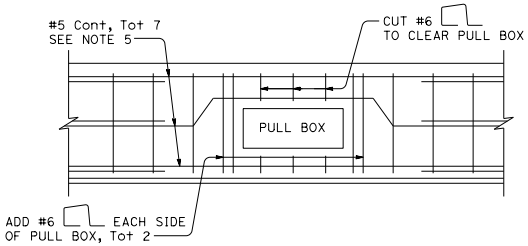

PULL BOX REINFORCEMENT DETAILS

STATE OF CALIFORNIA
DEPARTMENT OF TRANSPORTATION

CONCRETE BARRIER TYPE 85 DETAILS No. 5

NO SCALE

B11-86

2026 STANDARD PLAN B11-86

7-1-26

Return to Table of Contents

Dist	COUNTY	ROUTE	POST MILES TOTAL PROJECT	SHEET No.	TOTAL SHEETS

REGISTERED CIVIL ENGINEER

September 18, 2026

PLANS APPROVAL DATE

REGISTERED PROFESSIONAL ENGINEER Aiman Malak No. C73369 Exp. 12-31-26 CIVIL STATE OF CALIFORNIA

THE STATE OF CALIFORNIA OR ITS OFFICERS OR AGENTS SHALL NOT BE RESPONSIBLE FOR THE ACCURACY OR COMPLETENESS OF SCANNED COPIES OF THIS PLAN SHEET.

NOTES:

1. Adjust reinforcement as needed to clear HSS section by 1" minimum.
2. For typical connection for departure end block to MGS details, see Standard Plan A79B1 and Detail C on this sheet.

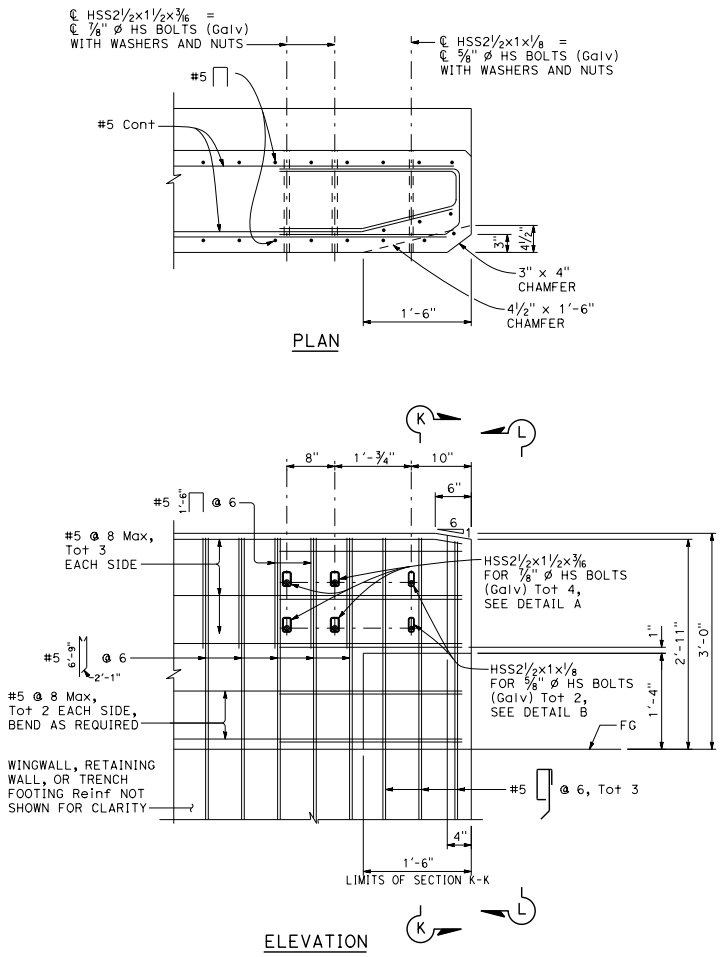

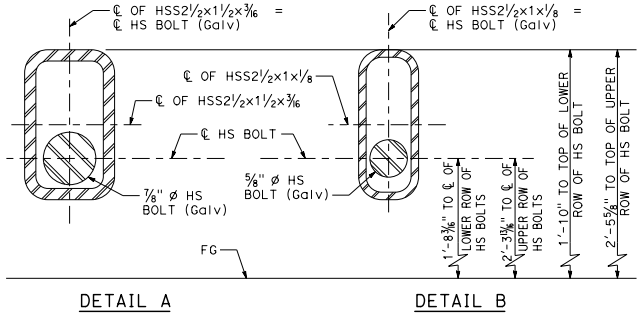

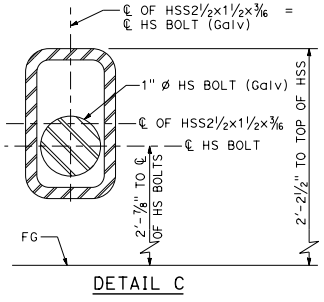

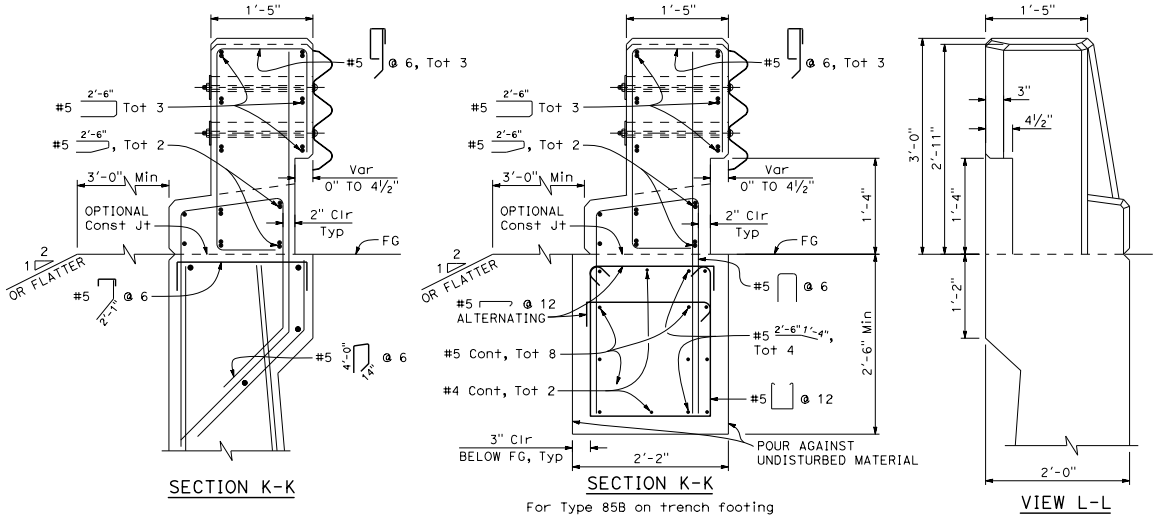

STATE OF CALIFORNIA
DEPARTMENT OF TRANSPORTATION

CONCRETE BARRIER TYPE 85 DETAILS No. 6

NO SCALE

B11-87

2026 STANDARD PLAN B11-87

7-1-26

Return to Table of Contents

Dist	COUNTY	ROUTE	POST MILES TOTAL PROJECT	SHEET No.	TOTAL SHEETS

REGISTERED CIVIL ENGINEER

September 18, 2026

PLANS APPROVAL DATE

REGISTERED PROFESSIONAL ENGINEER Aiman Malak No. C73369 Exp. 12-31-26 CIVIL STATE OF CALIFORNIA

THE STATE OF CALIFORNIA OR ITS OFFICERS OR AGENTS SHALL NOT BE RESPONSIBLE FOR THE ACCURACY OR COMPLETENESS OF SCANNED COPIES OF THIS PLAN SHEET.

LEGEND:

Bundled reinforcement

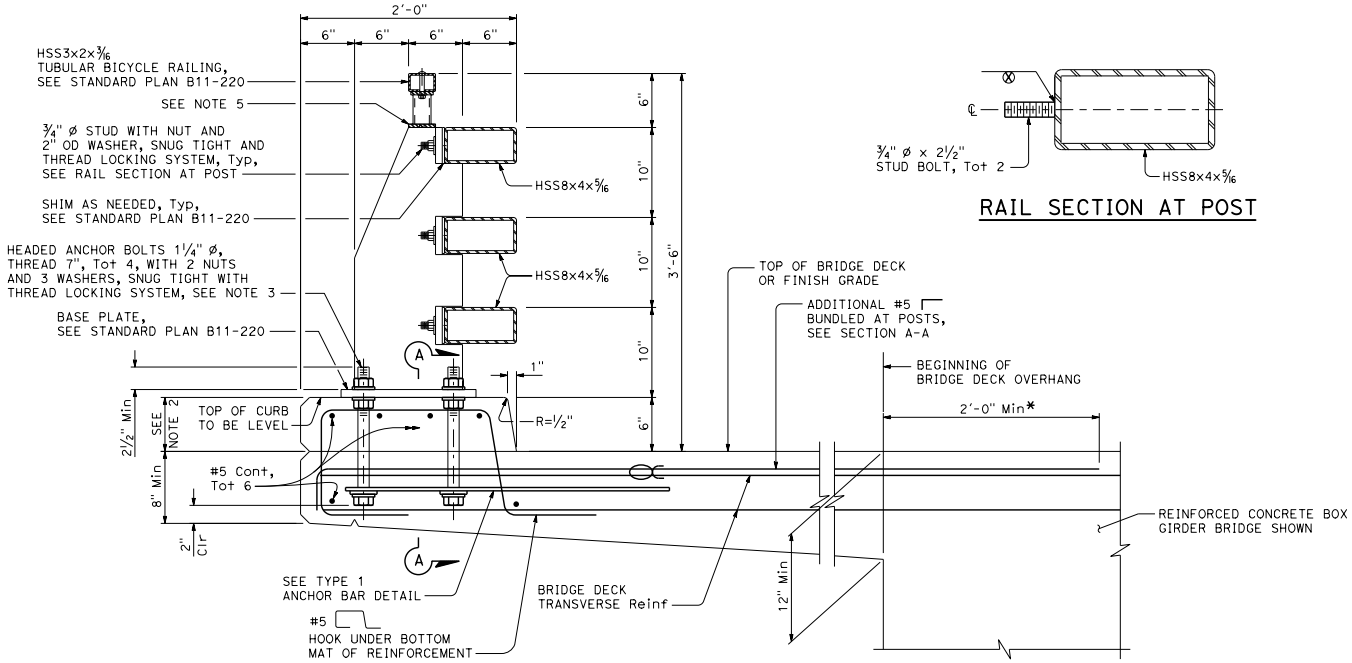

TYPICAL SECTION

* #5 Bundled at posts to extend 2'-0" Min beyond beginning of bridge deck overhang.
Bridge deck longitudinal reinforcement not shown for clarity.

RAIL SECTION AT POST

NOTES:

1. Heads of headed anchor bolts may be tack welded to washers and anchor bars. Anchor bars may be tack welded to anchor bars. Repair galvanized surfaces that are damaged.
2. Curb dimension at back side of rail will vary with bridge deck cross slope, and if overlay is placed on the bridge deck. For the same reasons, the anchor bolt lengths will vary.
3. Use extra thick washers for anchor bolts, with a minimum thickness of 0.305" and a maximum thickness of 0.375".
4. Clearance to reinforcement in concrete curb is 2" at traffic face and back face, and 1" on the top.
5. For access controlled freeways and expressways where bicycle traffic is prohibited by signage on the on-ramps, the bicycle railing (includes bar 3/8x3x8" and above) may be omitted.
6. For post and rail, rail splice, and parapet shoe details, see Standard Plans B11-220, B11-221, and B11-222.

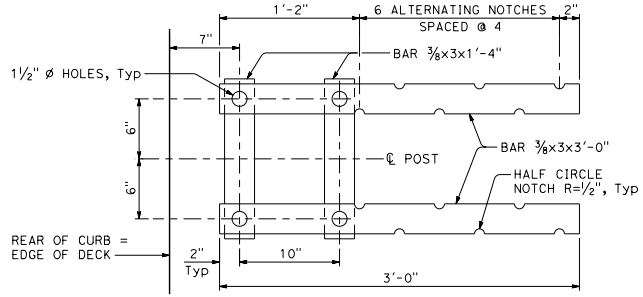

TYPE 1 ANCHOR BAR DETAIL

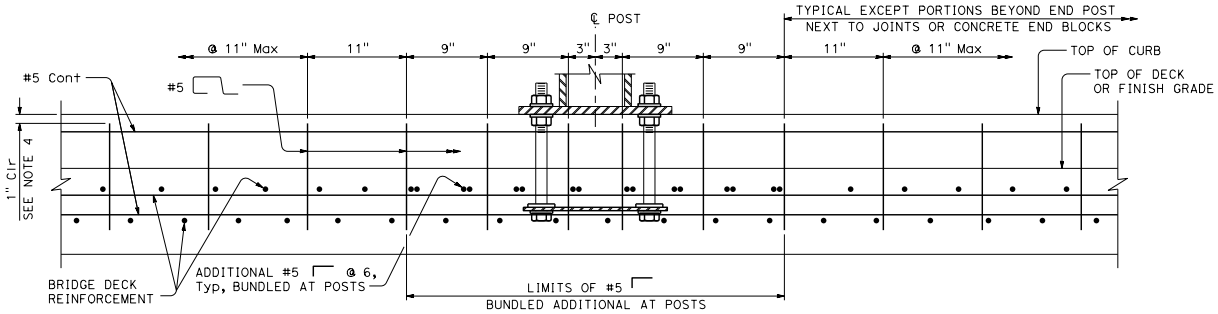

SECTION A-A

STATE OF CALIFORNIA
DEPARTMENT OF TRANSPORTATION

CALIFORNIA ST-75 BRIDGE RAIL DETAILS No. 1

NO SCALE

B11-200

2026 STANDARD PLAN B11-200

7-1-26

Return to Table of Contents

Dist	COUNTY	ROUTE	POST MILES TOTAL PROJECT	SHEET No.	TOTAL SHEETS

REGISTERED CIVIL ENGINEER

September 18, 2026

PLANS APPROVAL DATE

REGISTERED PROFESSIONAL ENGINEER Aiman Malak No. C73369 Exp. 12-31-26 CIVIL STATE OF CALIFORNIA

THE STATE OF CALIFORNIA OR ITS OFFICERS OR AGENTS SHALL NOT BE RESPONSIBLE FOR THE ACCURACY OR COMPLETENESS OF SCANNED COPIES OF THIS PLAN SHEET.

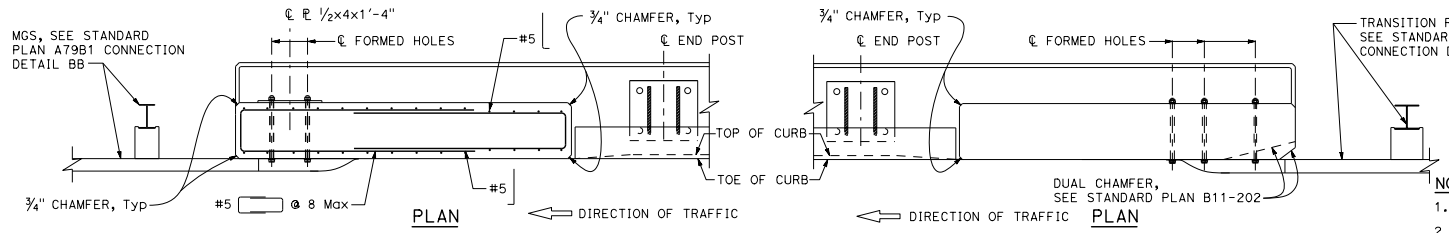

DEPARTURE END BLOCK DETAIL

Tubular bicycle railing not shown for clarity.

APPROACH END BLOCK DETAIL

Tubular bicycle railing not shown for clarity.

NOTES:

1. All HSS tubes to be parallel to longitudinal profile grade.
2. Posts are normal to profile grade of structure.
3. Posts are plumb in the transverse cross-section to profile grade.
4. If departure end block is within the Clear Recovery Zone (CRZ) of opposing traffic (30 feet for expressways and freeways, and 20 feet for conventional highways), use the Approach End Block detail for the departure end.
5. Heads of headed anchor bolts may be tack welded to washers and anchor bars. Anchor bars may be tack welded to anchor bars. Repair galvanized surfaces that are damaged.
6. For parapet shoe details, see Standard Plan B11-222.
7. For additional approach end block details, see Standard Plan B11-202.
8. For post and rail, and rail splice details, see Standard Plans B11-220 and B11-221.

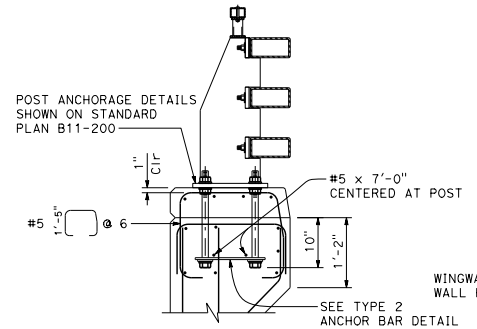

SECTION B-B

For details not shown, see Section C-C.

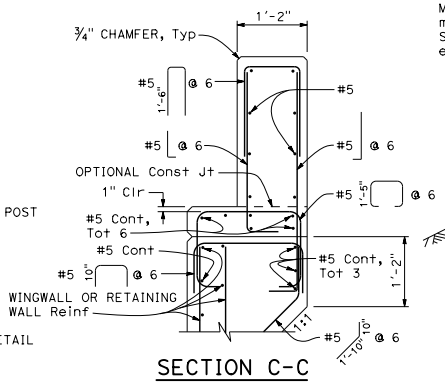

SECTION C-C

NOTE:

Minimum length of ST-75B is 40'-0", maximum length between joints in ST-75B is 200'-0", use ½" premolded expansion joint filler.

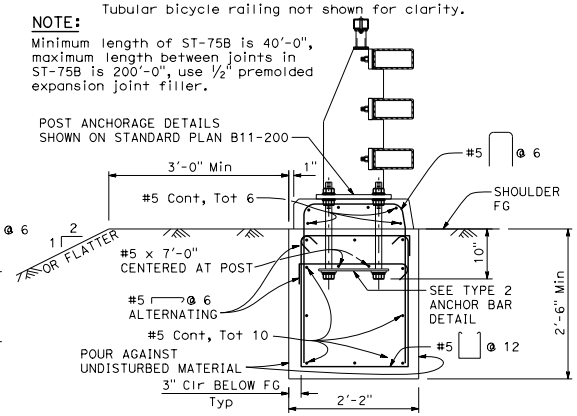

ST-75B

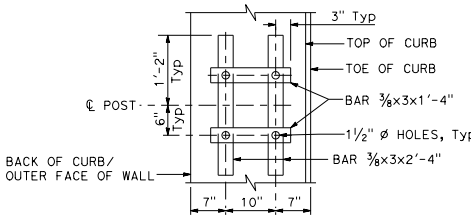

TYPE 2 ANCHOR BAR DETAIL

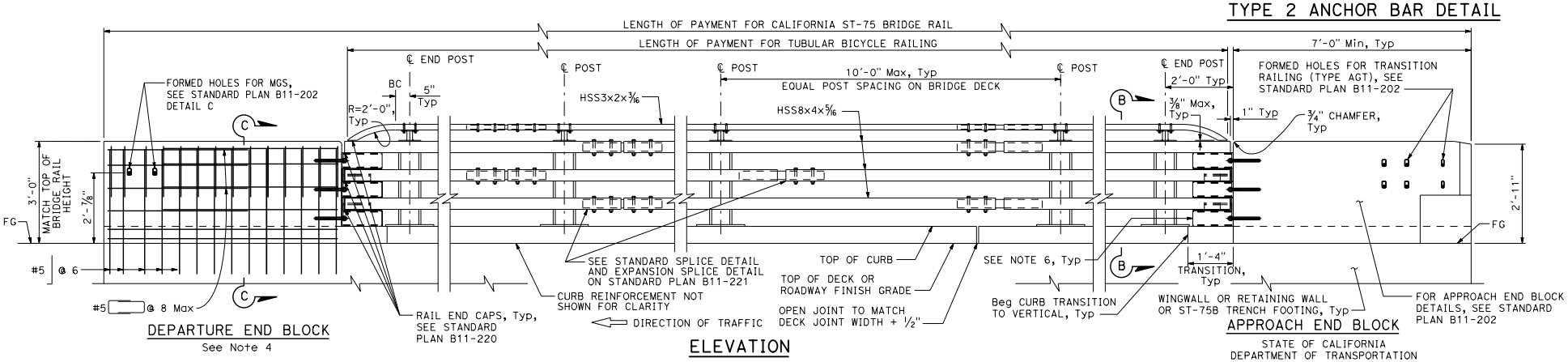

DEPARTURE END BLOCK

See Note 4

ELEVATION

Tubular bicycle railing to extend to where level bench elevation along exterior face of wingwall is within 1'-0" of roadway shoulder FG.

APPROACH END BLOCK

STATE OF CALIFORNIA
DEPARTMENT OF TRANSPORTATION

CALIFORNIA ST-75 BRIDGE RAIL DETAILS No. 2

NO SCALE

NOTE: Not all reinforcement shown for clarity.

B11-201

2026 STANDARD PLAN B11-201

7-1-26

Return to Table of Contents

Dist	COUNTY	ROUTE	POST MILES TOTAL PROJECT	SHEET No.	TOTAL SHEETS

REGISTERED CIVIL ENGINEER

September 18, 2026
PLANS APPROVAL DATE

REGISTERED PROFESSIONAL ENGINEER
Aiman Malak
No. C73369
Exp. 12-31-26
CIVIL
STATE OF CALIFORNIA

THE STATE OF CALIFORNIA OR ITS OFFICERS OR AGENTS SHALL NOT BE RESPONSIBLE FOR THE ACCURACY OR COMPLETENESS OF SCANNED COPIES OF THIS PLAN SHEET.

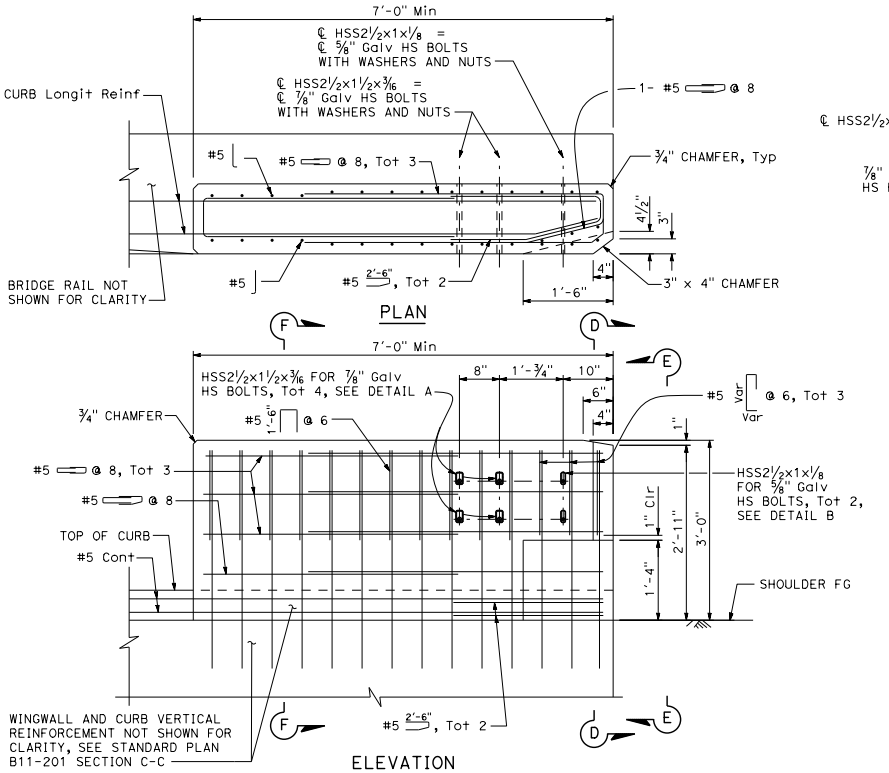

APPROACH END BLOCK DETAILS

Not all reinforcement shown for clarity.

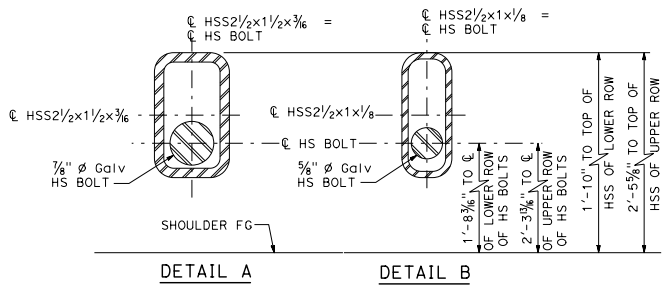

APPROACH END BLOCK FORMED HOLES

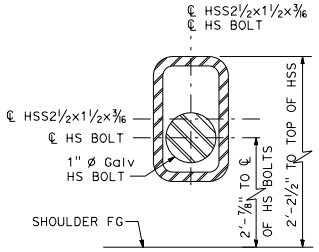

DEPARTURE END BLOCK FORMED HOLES

See Note 3

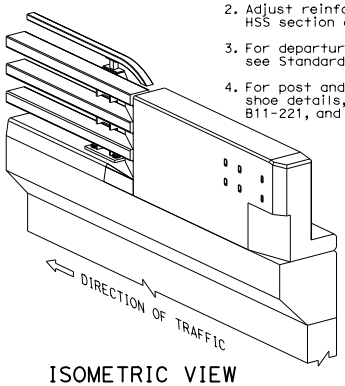

ISOMETRIC VIEW

NOTES:

1. 1" clearance at top of concrete curb, 2" clearance typical in end blocks, front and back face of concrete curb.
2. Adjust reinforcement as needed to clear HSS section at least 1".
3. For departure end block details, see Standard Plan B11-201.
4. For post and rail, rail splice, and parapet shoe details, see Standard Plans B11-220, B11-221, and B11-222.

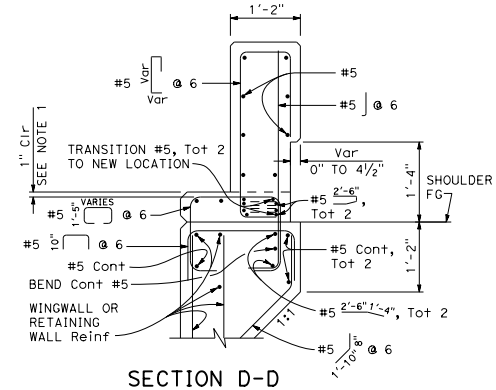

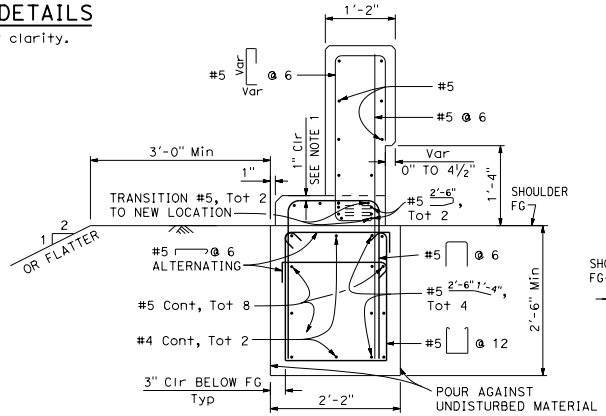

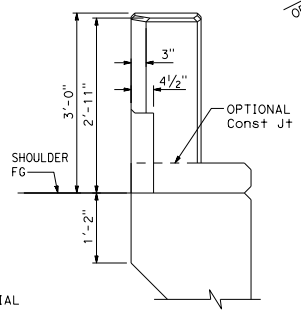

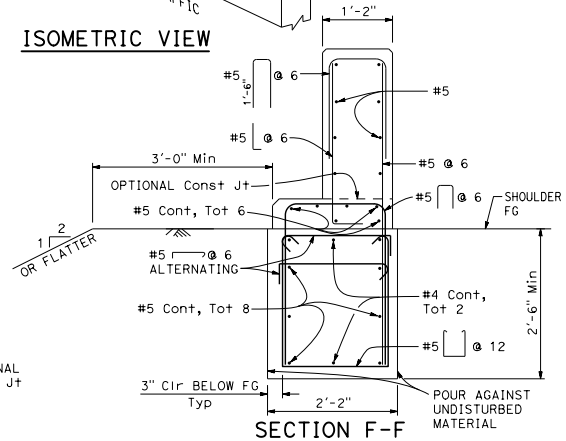

STATE OF CALIFORNIA
DEPARTMENT OF TRANSPORTATION

CALIFORNIA ST-75 BRIDGE RAIL DETAILS No. 3

NO SCALE

B11-202

7-1-26

Return to Table of Contents

Dist	COUNTY	ROUTE	POST MILES TOTAL PROJECT	SHEET No.	TOTAL SHEETS

REGISTERED CIVIL ENGINEER

September 18, 2026

PLANS APPROVAL DATE

REGISTERED PROFESSIONAL ENGINEER Aiman Malak No. C73369 Exp. 12-31-26 CIVIL STATE OF CALIFORNIA

THE STATE OF CALIFORNIA OR ITS OFFICERS OR AGENTS SHALL NOT BE RESPONSIBLE FOR THE ACCURACY OR COMPLETENESS OF SCANNED COPIES OF THIS PLAN SHEET.

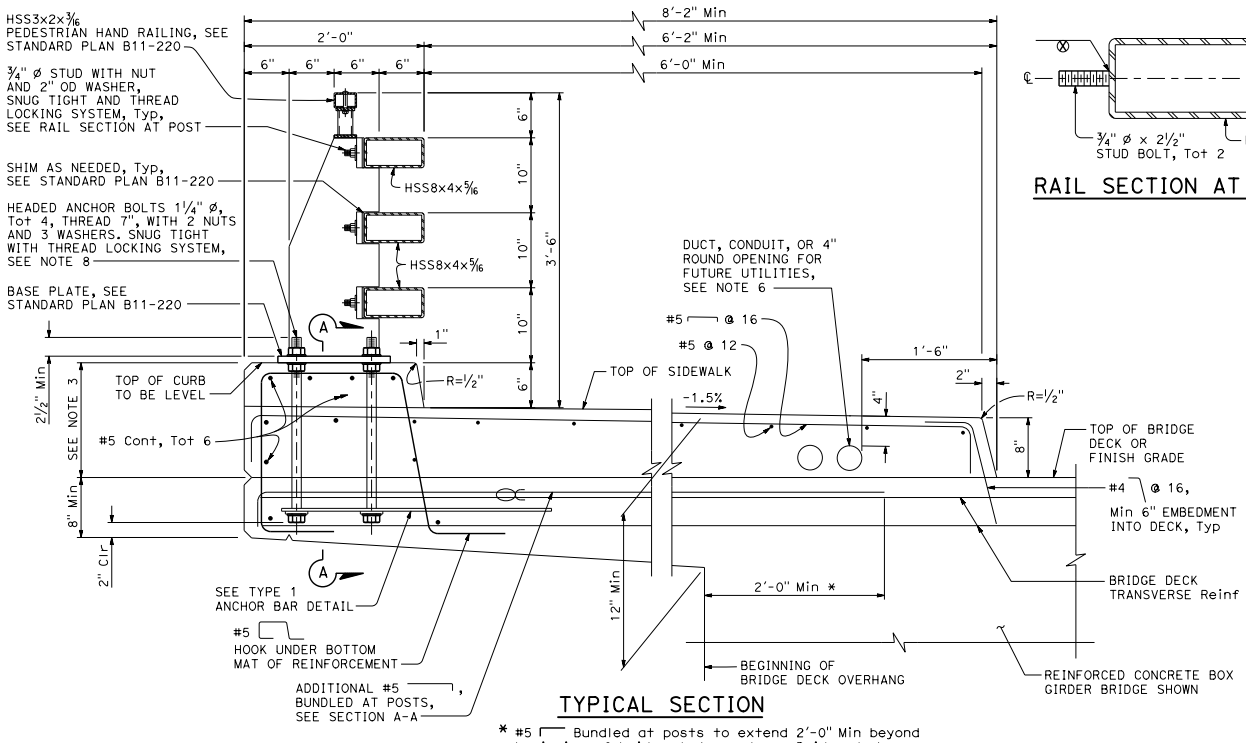

TYPICAL SECTION

* #5 Bundled at posts to extend 2'-0" Min beyond beginning of bridge deck overhang. Bridge deck longitudinal reinforcement not shown for clarity.

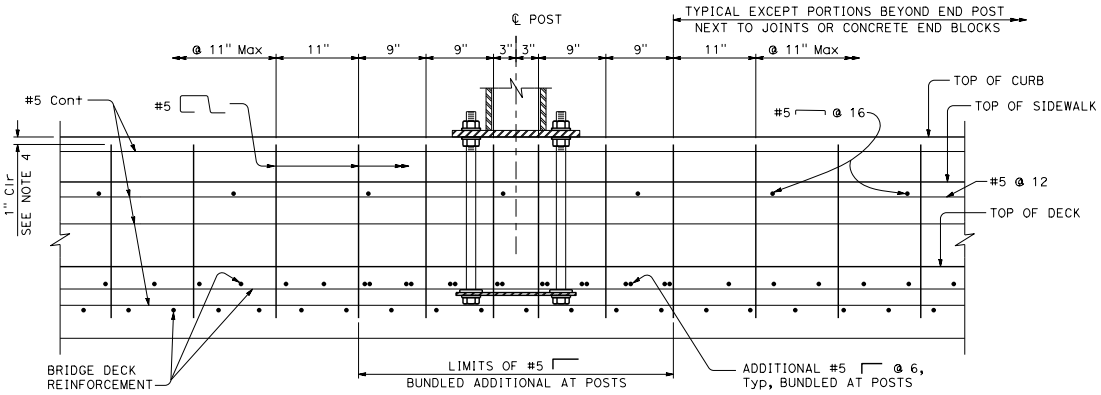

SECTION A-A

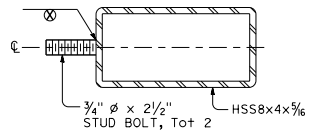

RAIL SECTION AT POST

LEGEND:

Bundled reinforcement

NOTES:

1. This barrier is to be used only for posted speeds of 45 MPH or less. For speeds greater than 45 MPH, pedestrians must be protected by a separation traffic barrier.
2. Heads of headed anchor bolts may be welded to washers and anchor bars. Anchor bars may be tack welded to anchor bars. Repair galvanized surfaces that are damaged.
3. Dimensions will vary with cross slope of sidewalk and bridge deck, and sidewalk width, and if overlay is placed on deck. For the same reasons, anchor bolt lengths will vary.
4. Clearance to reinforcing steel in curb, sidewalk, and end blocks is 2" except as noted. Longitudinal reinforcement to stop at all expansion joints.
5. See Project Plans for Joint Armor for Pedestrian Walkways details.
6. A minimum of two 4" round openings for future utilities and a maximum of six 4" round openings for a 6'-2" sidewalk. One 4" round opening can be added for each additional 1'-0" of sidewalk width. Utility opening must be a minimum of 6" from face of barrier parapet. Openings are to be sealed at ends and extended 8" minimum past end of sidewalk if not used. Duct forms are to be tied down. For exact number and placement of utility openings, see Project Plans. Minimum 2" clearance between round openings, ducts, or conduits.
7. See Project Plans for pull box location and type.
8. Use extra thick washers for anchor bolts with a minimum thickness of 0.305" and a maximum thickness of 0.375".
9. For post and rail, rail splice, and parapet shoe details, see Standard Plans B11-220, B11-221, and B11-222.

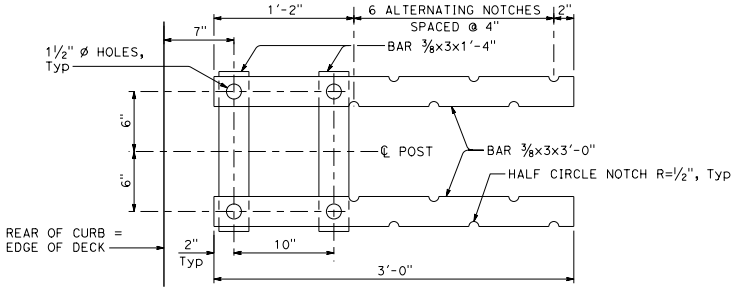

TYPE 1 ANCHOR BAR DETAIL

STATE OF CALIFORNIA
DEPARTMENT OF TRANSPORTATION

CALIFORNIA ST-75SW BRIDGE RAIL DETAILS No. 1

NO SCALE

B11-205

2026 STANDARD PLAN B11-205

7-1-26

Return to Table of Contents

Dist	COUNTY	ROUTE	POST MILES TOTAL PROJECT	SHEET No.	TOTAL SHEETS

REGISTERED CIVIL ENGINEER

September 18, 2026
PLANS APPROVAL DATE

REGISTERED PROFESSIONAL ENGINEER — Aiman Malak — No. C73369 — Exp. 12-31-26 — CIVIL — STATE OF CALIFORNIA

THE STATE OF CALIFORNIA OR ITS OFFICERS OR AGENTS SHALL NOT BE RESPONSIBLE FOR THE ACCURACY OR COMPLETENESS OF SCANNED COPIES OF THIS PLAN SHEET.

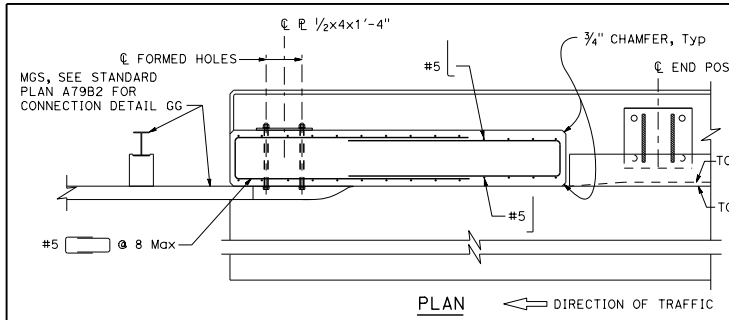

DEPARTURE END BLOCK DETAIL

Pedestrian hand railing not shown for clarity.

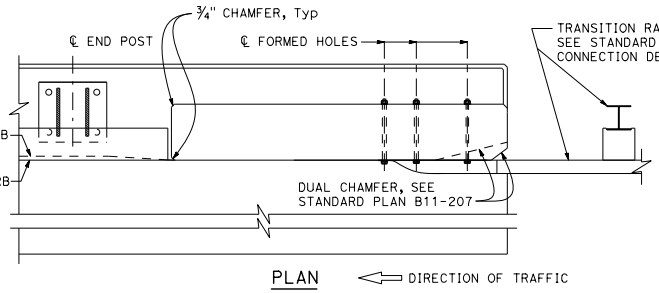

APPROACH END BLOCK DETAIL

Pedestrian hand railing not shown for clarity.

NOTES:

1. All HSS tubes to be parallel to longitudinal profile grade.
2. Posts are normal to profile grade of structure.
3. Posts are plumb in the transverse cross-section to profile grade.
4. If departure end block is within the Clear Recovery Zone (CRZ) of opposing traffic (30 feet for expressways and freeways, and 20 feet for conventional highways), use the Approach End Block detail for the departure end.
5. Heads of headed anchor bolts may be tack welded to washers and anchor bars. Anchor bars may be tack welded to anchor bars. Repair galvanized surfaces that are damaged.
6. For parapet shoe details, see Standard Plan B11-222.
7. For sidewalk reinforcement, see Standard Plan B11-205.
8. For post and rail, and rail splice details, see Standard Plans B11-220 and B11-221.

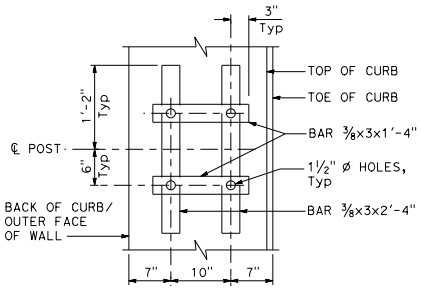

TYPE 2 ANCHOR BAR DETAIL

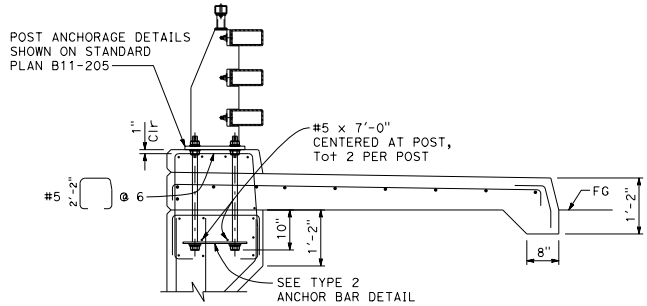

SECTION B-B

For details not shown, see Section C-C.

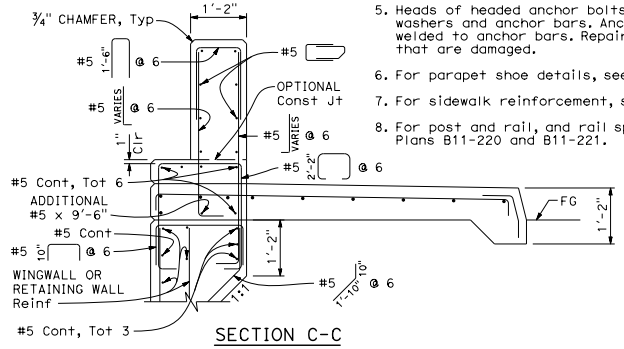

SECTION C-C

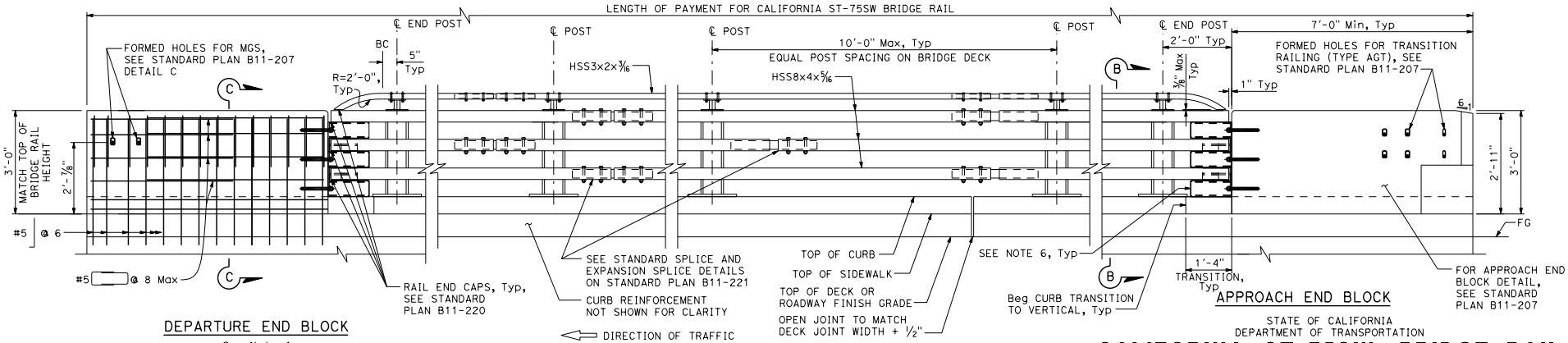

DEPARTURE END BLOCK

See Note 4

APPROACH END BLOCK

ELEVATION

Pedestrian hand railing to extend to where level bench elevation along exterior face of wingwall is within 1'-0" of roadway shoulder FG.

NOTE: Not all reinforcement shown for clarity.

STATE OF CALIFORNIA
DEPARTMENT OF TRANSPORTATION

CALIFORNIA ST-75SW BRIDGE RAIL DETAILS No. 2

NO SCALE

B11-206

7-1-26

Return to Table of Contents

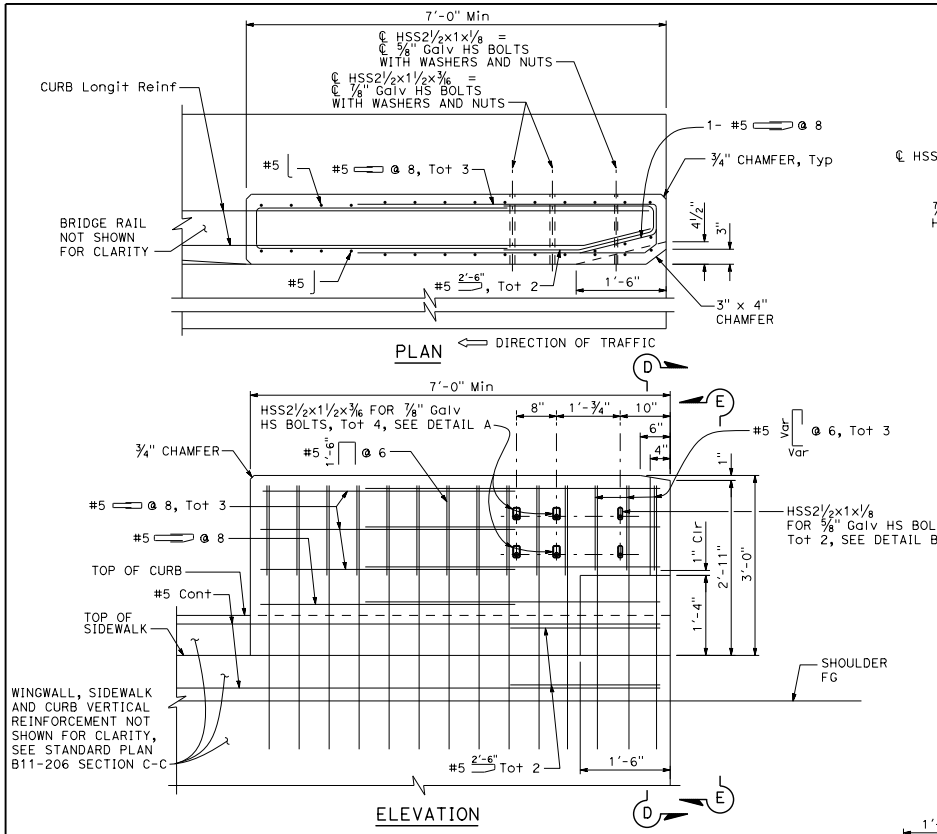

APPROACH END BLOCK DETAILS

Not all reinforcement shown for clarity.

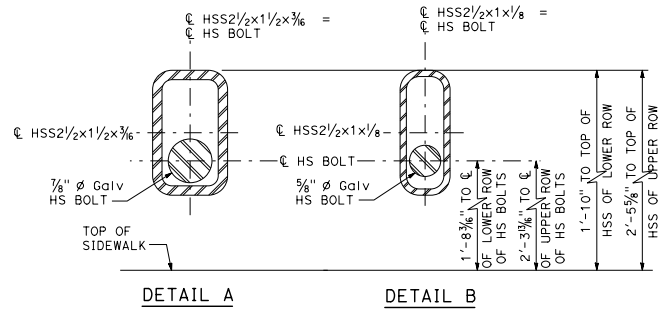

APPROACH END BLOCK FORMED HOLES

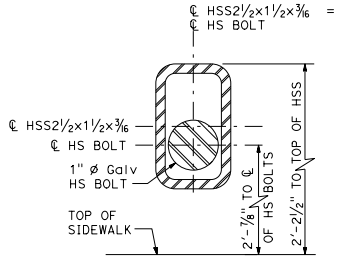

DEPARTURE END BLOCK FORMED HOLES

See Note 3

NOTES:

1. 1" clearance at top of concrete curb, 2" clearance typical in end blocks, front and back face of concrete curb.
2. Adjust reinforcement as needed to clear HSS section by at least 1".
3. For departure end block details, see Standard Plan B11-206.
4. For post and rail, rail splice, and parapet shoe details, see Standard Plans B11-220, B11-221, and B11-222.

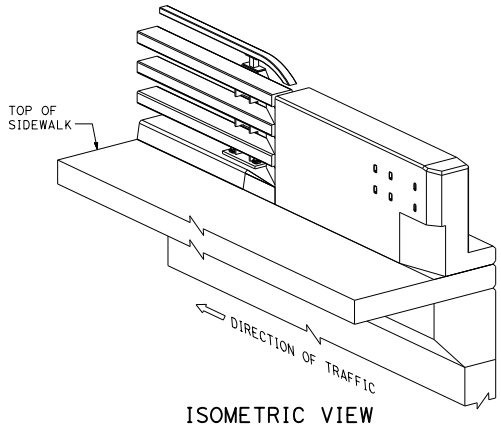

ISOMETRIC VIEW

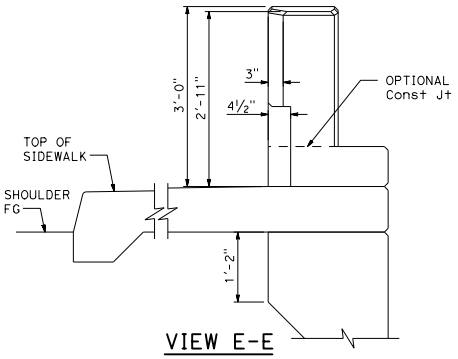

VIEW E-E

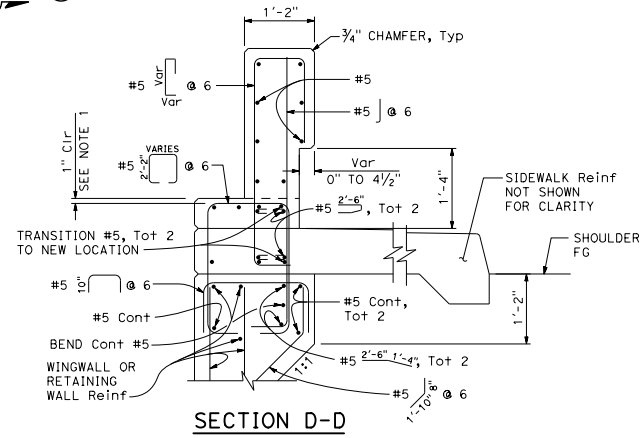

SECTION D-D

Dist	COUNTY	ROUTE	POST MILES TOTAL PROJECT	SHEET No.	TOTAL SHEETS

REGISTERED CIVIL ENGINEER

September 18, 2026

PLANS APPROVAL DATE

REGISTERED PROFESSIONAL ENGINEER Aiman Malak No. C73369 Exp. 12-31-26 CIVIL STATE OF CALIFORNIA

THE STATE OF CALIFORNIA OR ITS OFFICERS OR AGENTS SHALL NOT BE RESPONSIBLE FOR THE ACCURACY OR COMPLETENESS OF SCANNED COPIES OF THIS PLAN SHEET.

STATE OF CALIFORNIA
DEPARTMENT OF TRANSPORTATION

CALIFORNIA ST-75SW BRIDGE RAIL DETAILS No. 3

NO SCALE

B11-207

7-1-26

Return to Table of Contents

Dist	COUNTY	ROUTE	POST MILES TOTAL PROJECT	SHEET No.	TOTAL SHEETS

REGISTERED CIVIL ENGINEER

September 18, 2026
PLANS APPROVAL DATE

REGISTERED PROFESSIONAL ENGINEER
Aiman Malak
No. C73369
Exp. 12-31-26
CIVIL
STATE OF CALIFORNIA

THE STATE OF CALIFORNIA OR ITS OFFICERS OR AGENTS SHALL NOT BE RESPONSIBLE FOR THE ACCURACY OR COMPLETENESS OF SCANNED COPIES OF THIS PLAN SHEET.

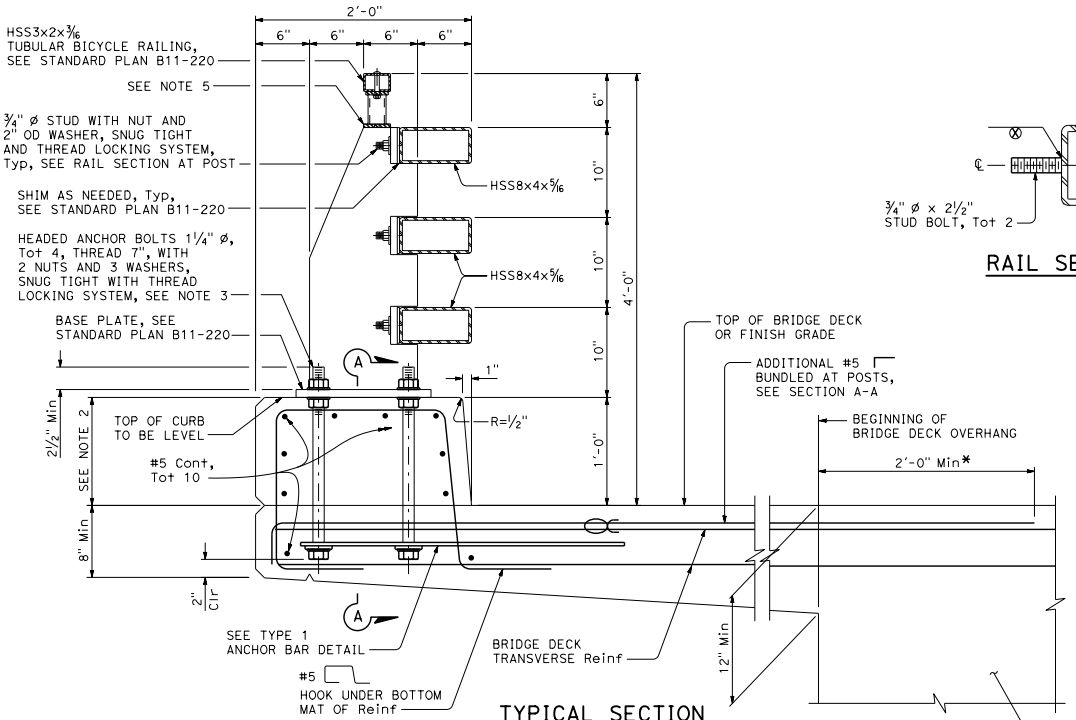

TYPICAL SECTION

* #5 Bundled at posts to extend 2'-0" Min beyond beginning of bridge deck overhang.
Bridge deck longitudinal reinforcement not shown for clarity.

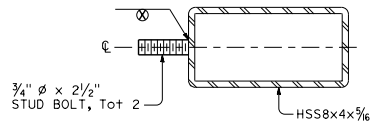

RAIL SECTION AT POST

LEGEND:

Bundled reinforcement

NOTES:

1. Heads of headed anchor bolts may be tack welded to washers and anchor bars. Anchor bars may be tack welded to anchor bars. Repair galvanized surfaces that are damaged.
2. Curb dimension at back side of rail will vary with bridge deck cross slope, and if overlay is placed on the bridge deck. For the same reasons, the anchor bolt lengths will vary.
3. Use extra thick washers for anchor bolts, with a minimum thickness of 0.305" and a maximum thickness of 0.375".
4. Clearance to reinforcing steel in curb and end blocks is 2". Longitudinal reinforcement to stop at all expansion joints.
5. For access controlled freeways and expressways where bicycle traffic is prohibited by signage on the on-ramps, the bicycle railing (includes bar 3/8x3x8" and above) may be omitted.
6. For post and rail, rail splice, and parapet shoe details, see Standard Plans B11-220, B11-221, and B11-222.

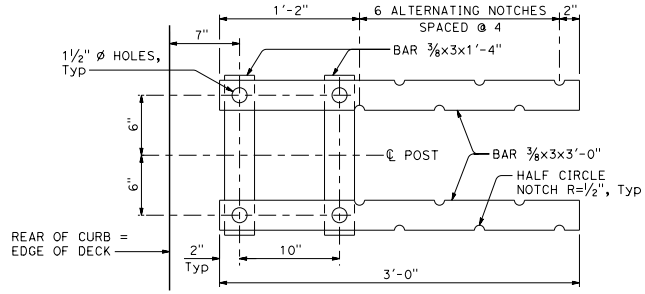

TYPE 1 ANCHOR BAR DETAIL

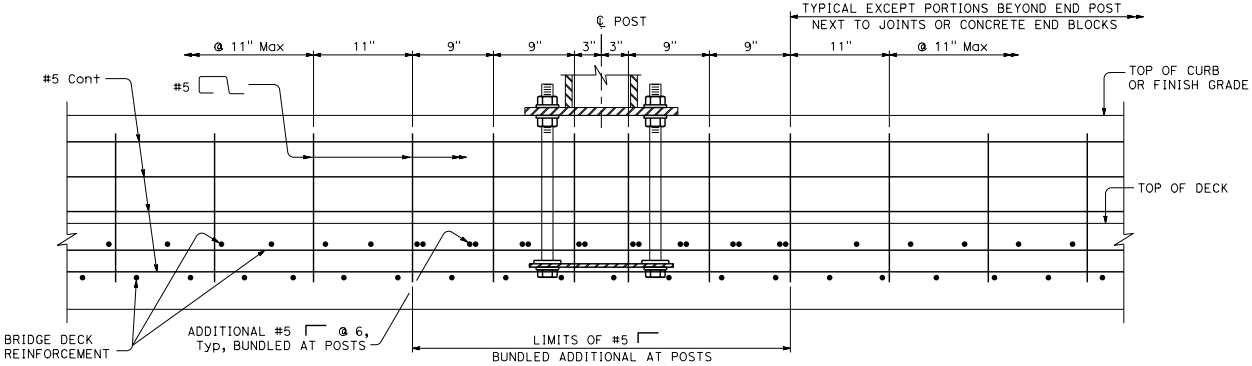

SECTION A-A

STATE OF CALIFORNIA
DEPARTMENT OF TRANSPORTATION

CALIFORNIA ST-76 BRIDGE RAIL DETAILS No. 1

NO SCALE

B11-210

2026 STANDARD PLAN B11-210

7-1-26

Return to Table of Contents

Dist	COUNTY	ROUTE	POST MILES TOTAL PROJECT	SHEET No.	TOTAL SHEETS

REGISTERED CIVIL ENGINEER

September 18, 2026
PLANS APPROVAL DATE

REGISTERED PROFESSIONAL ENGINEER
Aiman Malak
No. C73369
Exp. 12-31-26
CIVIL
STATE OF CALIFORNIA

THE STATE OF CALIFORNIA OR ITS OFFICERS OR AGENTS SHALL NOT BE RESPONSIBLE FOR THE ACCURACY OR COMPLETENESS OF SCANNED COPIES OF THIS PLAN SHEET.

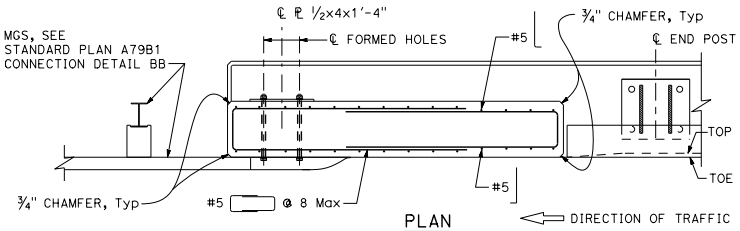

DEPARTURE END BLOCK DETAIL

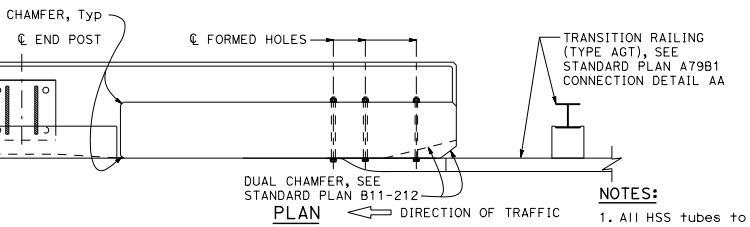

APPROACH END BLOCK DETAIL

NOTES:

1. All HSS tubes to be parallel to longitudinal profile grade.
2. Posts are normal to profile grade of structure.
3. Posts are plumb in the transverse cross-section to profile grade.
4. If departure end block is within the Clear Recovery Zone (CRZ, 30 feet for expressways and freeways and 20 feet for conventional highways) of opposing traffic, then use the approach end block at the departure end.
5. Heads of headed anchor bolts may be tack welded to washers and anchor bars. Anchor bars may be tack welded to anchor bars. Repair galvanized surfaces that are damaged.
6. For parapet shoe details, see Standard Plan B11-222.
7. For additional approach end block details, see Standard Plan B11-212.
8. For post and rail, and rail splice details, see Standard Plans B11-220 and B11-221.

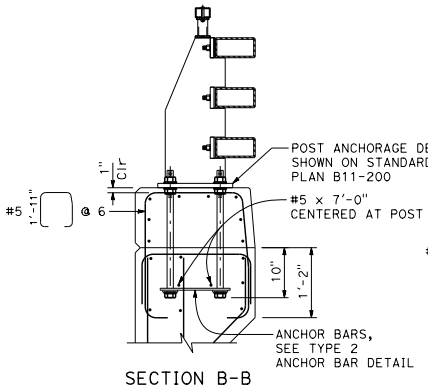

SECTION B-B

For details not shown, see Section C-C.

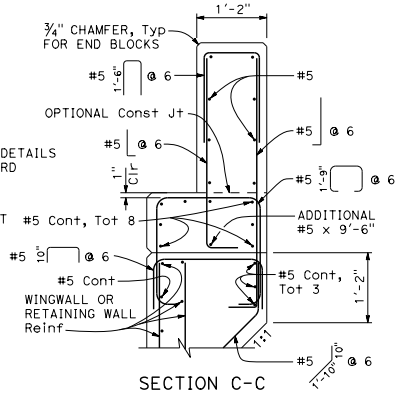

SECTION C-C

NOTE:
Minimum length of ST-76B is 40'-0", maximum length between joints in ST-76B is 200'-0", use ½" premolded expansion joint filler.

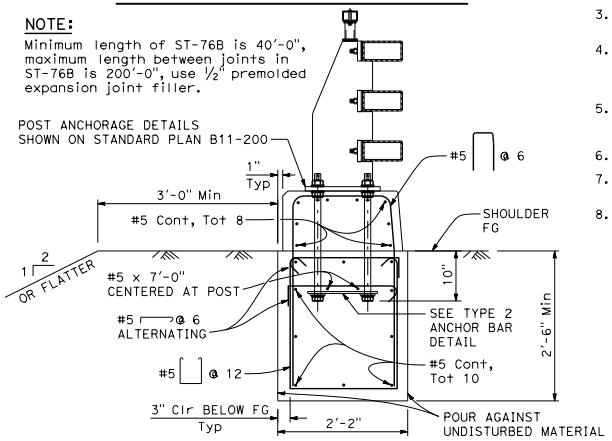

ST-76B

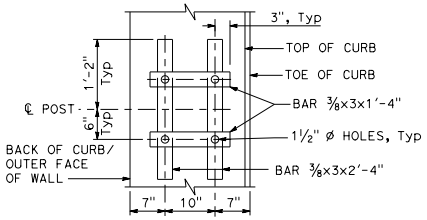

TYPE 2 ANCHOR BAR DETAIL

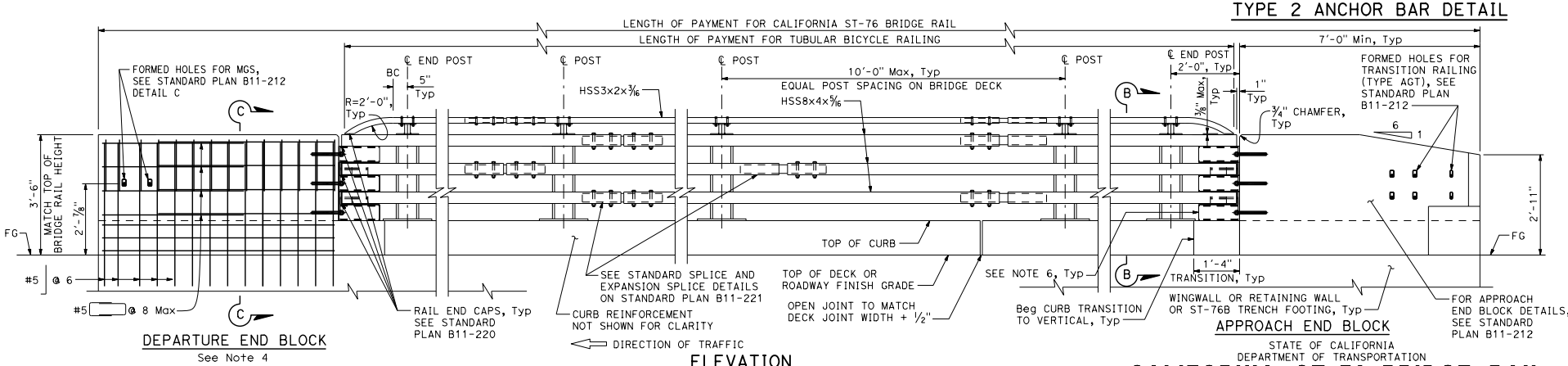

DEPARTURE END BLOCK

See Note 4

ELEVATION

Tubular bicycle railing to extend to where level bench elevation along exterior face of wingwall is within 1'-0" of roadway shoulder FG.

APPROACH END BLOCK

STATE OF CALIFORNIA
DEPARTMENT OF TRANSPORTATION

CALIFORNIA ST-76 BRIDGE RAIL DETAILS No. 2

NO SCALE

NOTE: Not all reinforcement shown for clarity.

B11-211

2026 STANDARD PLAN B11-211

7-1-26

Return to Table of Contents

Dist	COUNTY	ROUTE	POST MILES TOTAL PROJECT	SHEET No.	TOTAL SHEETS

REGISTERED CIVIL ENGINEER

September 18, 2026

PLANS APPROVAL DATE

REGISTERED PROFESSIONAL ENGINEER Aiman Malak No. C73369 Exp. 12-31-26 CIVIL STATE OF CALIFORNIA

THE STATE OF CALIFORNIA OR ITS OFFICERS OR AGENTS SHALL NOT BE RESPONSIBLE FOR THE ACCURACY OR COMPLETENESS OF SCANNED COPIES OF THIS PLAN SHEET.

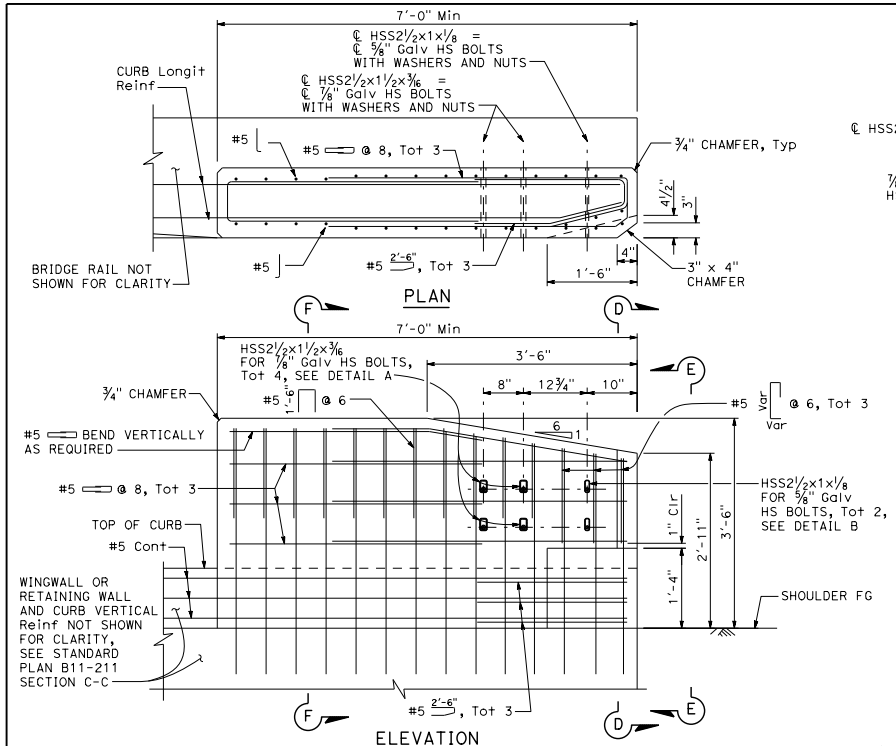

APPROACH END BLOCK DETAILS

Not all reinforcement shown for clarity.

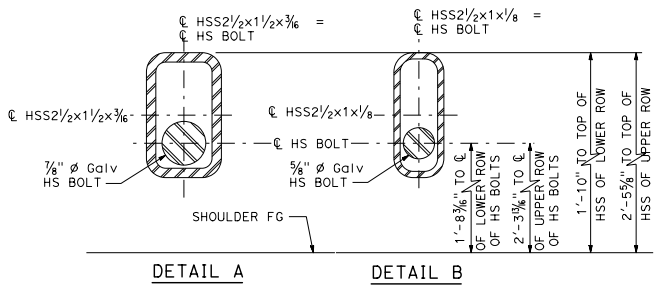

APPROACH END BLOCK FORMED HOLES

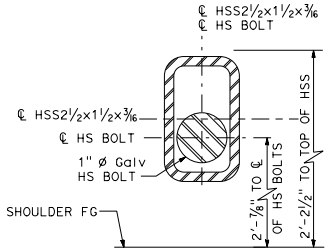

DEPARTURE END BLOCK FORMED HOLES

See Note 3

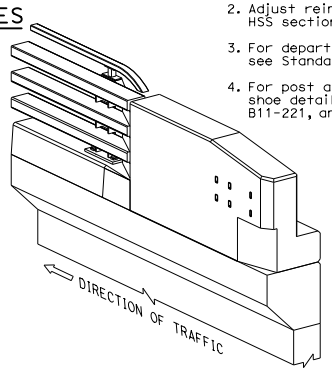

ISOMETRIC VIEW

NOTES:

1. 1" clearance at top of concrete curb, 2" clearance typical in end blocks, front and back face of concrete curb.
2. Adjust reinforcement as needed to clear HSS section by at least 1".
3. For departure end block details, see Standard Plan B11-221.
4. For post and rail, rail splice, and parapet shoe details, see Standard Plans B11-220, B11-221, and B11-222.

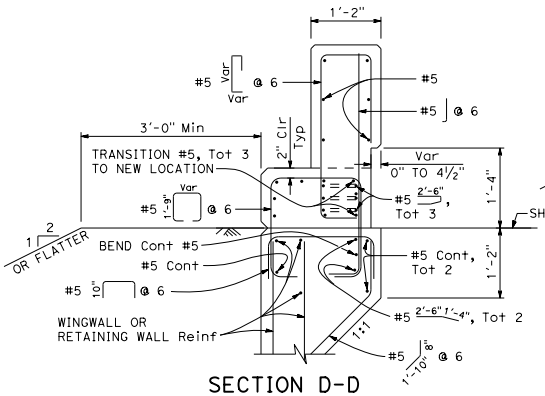

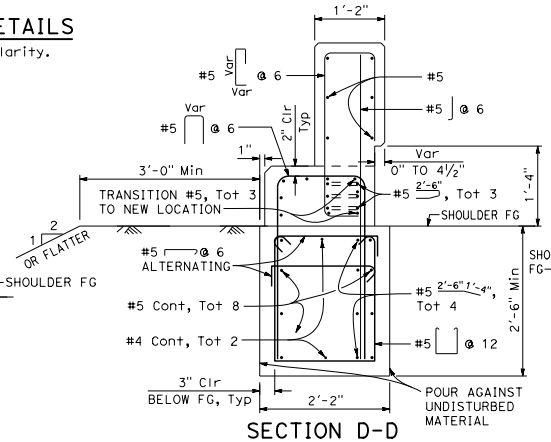

For ST-76B on trench footing

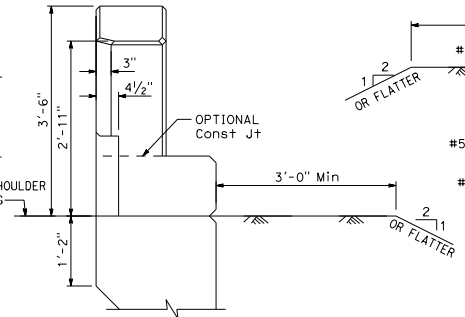

VIEW E-E

APPROACH TRANSITION END BLOCK DETAILS

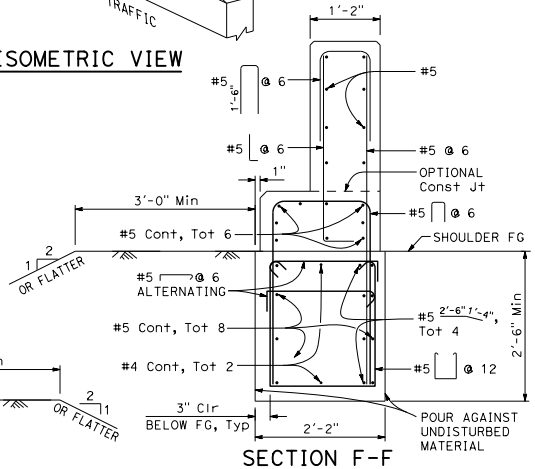

For ST-76B on trench footing

STATE OF CALIFORNIA
DEPARTMENT OF TRANSPORTATION

CALIFORNIA ST-76 BRIDGE RAIL DETAILS No. 3

NO SCALE

B11-212

7-1-26

Return to Table of Contents

Dist	COUNTY	ROUTE	POST MILES TOTAL PROJECT	SHEET No.	TOTAL SHEETS

REGISTERED CIVIL ENGINEER

September 18, 2026
PLANS APPROVAL DATE

REGISTERED PROFESSIONAL ENGINEER
Aiman Malak
No. C73369
Exp. 12-31-26
CIVIL
STATE OF CALIFORNIA

THE STATE OF CALIFORNIA OR ITS OFFICERS OR AGENTS SHALL NOT BE RESPONSIBLE FOR THE ACCURACY OR COMPLETENESS OF SCANNED COPIES OF THIS PLAN SHEET.

LEGEND:

Bundled reinforcement

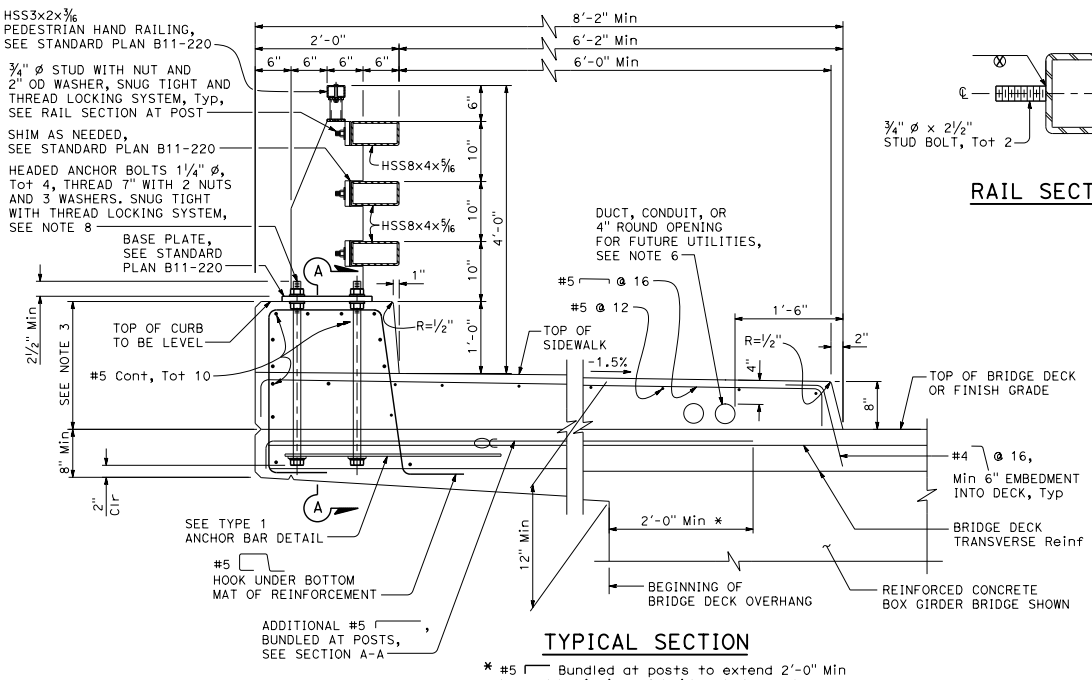

TYPICAL SECTION

* #5 Bundled at posts to extend 2'-0" Min beyond beginning of bridge deck overhang.
Bridge deck longitudinal reinforcement not shown for clarity.

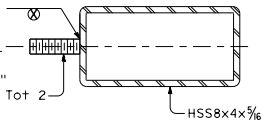

RAIL SECTION AT POST

NOTES:

1. This barrier is to be used only for posted speeds of 45 MPH or less. For speeds greater than 45 MPH, pedestrians must be protected by a separation traffic barrier.
2. Heads of headed anchor bolts may be welded to washers and anchor bars. Anchor bars may be tack welded to anchor bars. Repair galvanized surfaces that are damaged.
3. Dimensions will vary with cross slope of sidewalk and bridge deck, and sidewalk width, and if overlay is placed on deck. For the same reasons, anchor bolt lengths will vary.
4. Clearance to reinforcing steel in curb, sidewalk, and end blocks is 2" except as noted. Longitudinal reinforcement to stop at all expansion joints.
5. See Project Plans for Joint Armor for Pedestrian Walkways details.
6. A minimum of two 4" round openings for future utilities and a maximum of six 4" round openings for a 6'-2" sidewalk. One 4" round opening can be added for each additional 1'-0" of sidewalk width. Utility opening must be a minimum of 6" from face of barrier parapet. Openings are to be sealed at ends and extended 8" minimum past end of sidewalk if not used. Duct forms are to be tied down. For exact number and placement of utility openings, see Project Plans. Minimum 2" clearance between round openings, ducts, or conduits.
7. See Project Plans for pull box location and type.
8. Use extra thick washers for anchor bolts with a minimum thickness of 0.305" and a maximum thickness of 0.375".
9. For post and rail, rail splice, and parapet shoe details, see Standard Plans B11-220, B11-221, and B11-222.

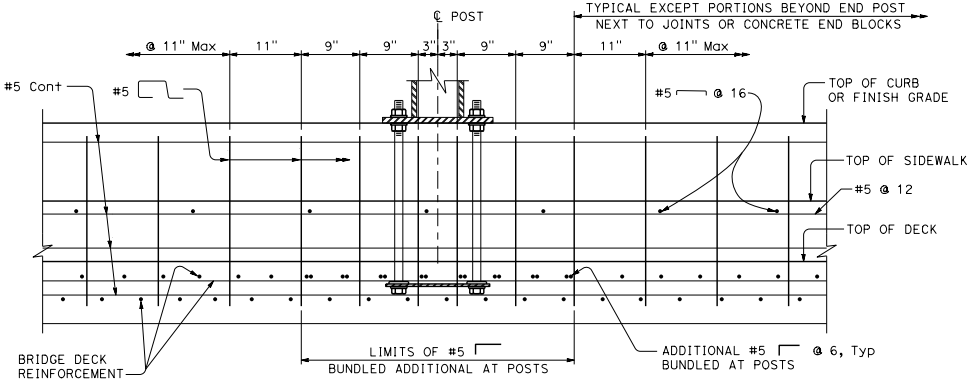

SECTION A-A

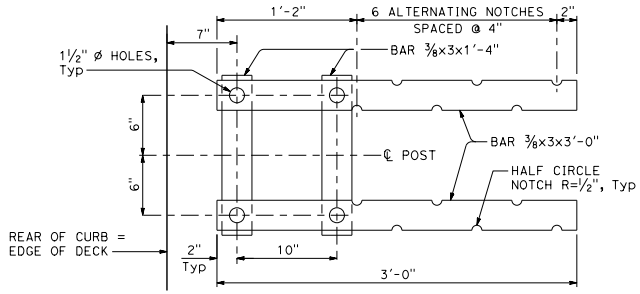

TYPE 1 ANCHOR BAR DETAIL

STATE OF CALIFORNIA
DEPARTMENT OF TRANSPORTATION

CALIFORNIA ST-76SW BRIDGE RAIL DETAILS No. 1

NO SCALE

B11-215

2026 STANDARD PLAN B11-215

7-1-26

Return to Table of Contents

Dist	COUNTY	ROUTE	POST MILES TOTAL PROJECT	SHEET No.	TOTAL SHEETS

REGISTERED CIVIL ENGINEER

September 18, 2026
PLANS APPROVAL DATE

REGISTERED PROFESSIONAL ENGINEER Aiman Malak No. C73369 Exp. 12-31-26 CIVIL STATE OF CALIFORNIA

THE STATE OF CALIFORNIA OR ITS OFFICERS OR AGENTS SHALL NOT BE RESPONSIBLE FOR THE ACCURACY OR COMPLETENESS OF SCANNED COPIES OF THIS PLAN SHEET.

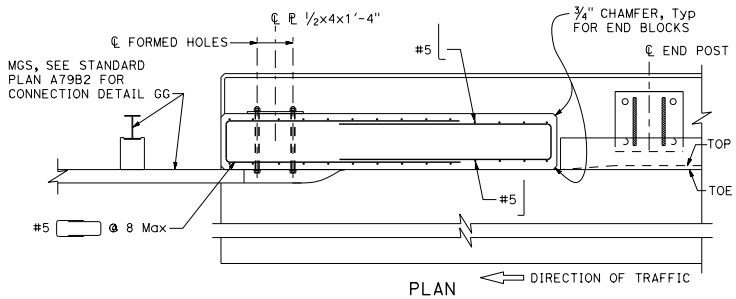

PLAN

DEPARTURE END BLOCK DETAIL

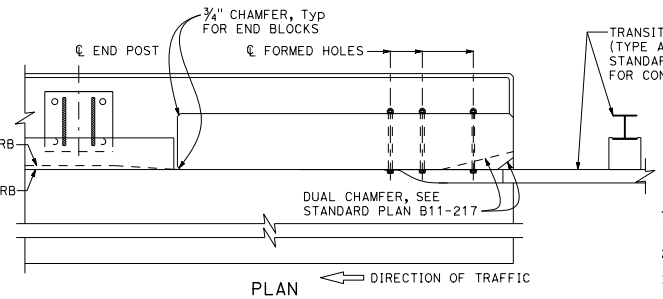

PLAN

APPROACH END BLOCK DETAIL

NOTES:

1. All HSS tubes to be parallel to longitudinal profile grade.
2. Posts are normal to profile grade of structure.
3. Posts are plumb in the transverse cross-section to profile grade.
4. If departure end block is within the Clear Recovery Zone (CRZ) of opposing traffic (30 feet for expressways and freeways, and 20 feet for conventional highways), use the Approach End Block detail for the departure end.
5. Heads of headed anchor bolts may be tack welded to washers and anchor bars. Anchor bars may be tack welded to anchor bars. Repair galvanized surfaces that are damaged.
6. For parapet shoe details, see Standard Plan B11-222.
7. For sidewalk reinforcement, see Standard Plan B11-217.
8. For post and rail, and rail splice details, see Standard Plans B11-220 and B11-221.

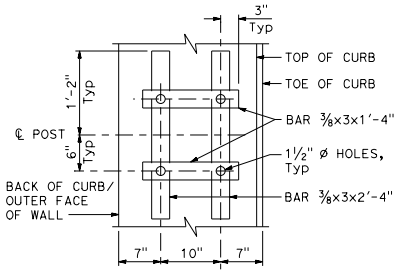

TYPE 2 ANCHOR BAR DETAIL

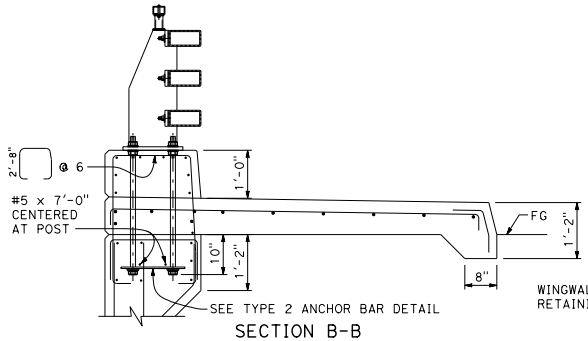

SECTION B-B

For details not shown, see Section C-C

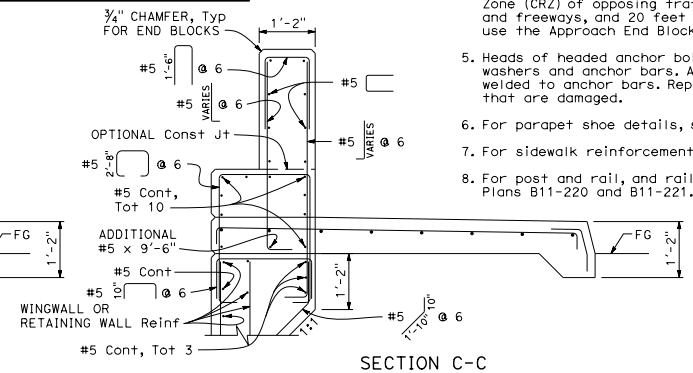

SECTION C-C

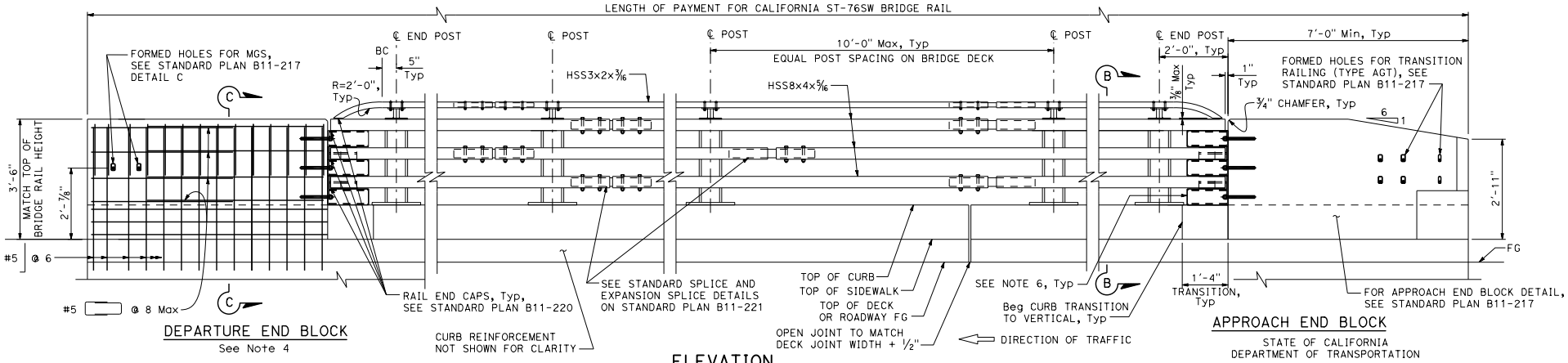

DEPARTURE END BLOCK
See Note 4

APPROACH END BLOCK

ELEVATION

Pedestrian hand railing to extend to where level bench elevation along exterior face of wingwall is within 1'-0" of roadway shoulder FG.

STATE OF CALIFORNIA
DEPARTMENT OF TRANSPORTATION

CALIFORNIA ST-76SW BRIDGE RAIL DETAILS No. 2

NO SCALE

NOTE: Not all reinforcement shown for clarity.

B11-216

7-1-26

Return to Table of Contents

Dist	COUNTY	ROUTE	POST MILES TOTAL PROJECT	SHEET No.	TOTAL SHEETS

REGISTERED CIVIL ENGINEER

September 18, 2026

PLANS APPROVAL DATE

REGISTERED PROFESSIONAL ENGINEER Aiman Malak No. C73369 Exp. 12-31-26 CIVIL STATE OF CALIFORNIA

THE STATE OF CALIFORNIA OR ITS OFFICERS OR AGENTS SHALL NOT BE RESPONSIBLE FOR THE ACCURACY OR COMPLETENESS OF SCANNED COPIES OF THIS PLAN SHEET.

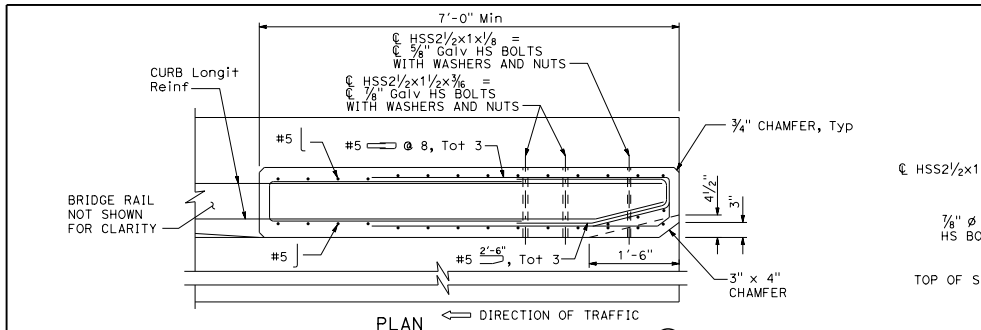

PLAN

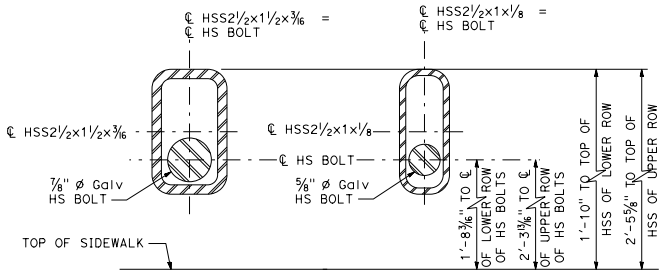

DETAIL A DETAIL B

APPROACH END BLOCK FORMED HOLES

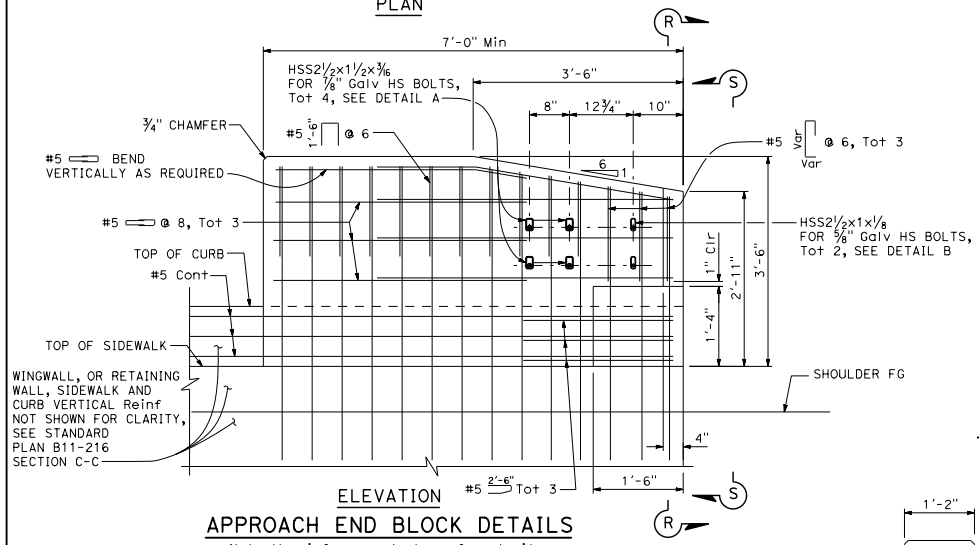

ELEVATION

APPROACH END BLOCK DETAILS

Not all reinforcement shown for clarity.

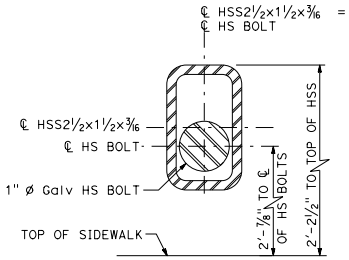

DETAIL C

DEPARTURE END BLOCK FORMED HOLES

See Note 3

NOTES:

1. 1" clearance at top of concrete curb, 2" clearance typical in end blocks, front and back face of concrete curb.
2. Adjust reinforcement as needed to clear HSS section by at least 1".
3. For departure end block details, see Standard Plan B11-216.
4. For post and rail, rail splice, and parapet shoe details, see Standard Plans B11-220, B11-221, and B11-222.

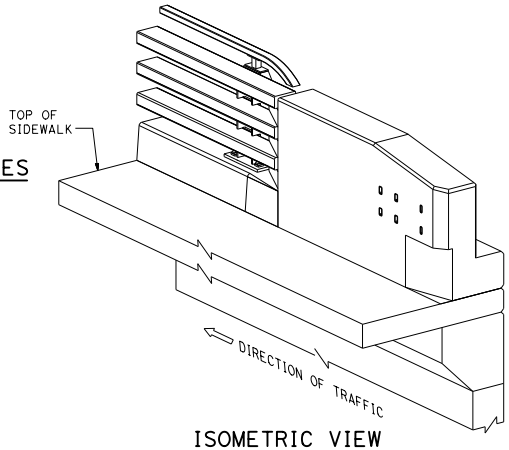

ISOMETRIC VIEW

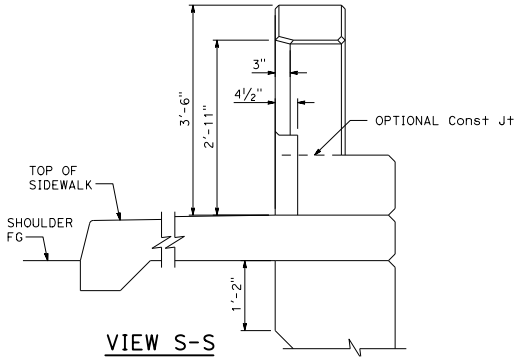

VIEW S-S

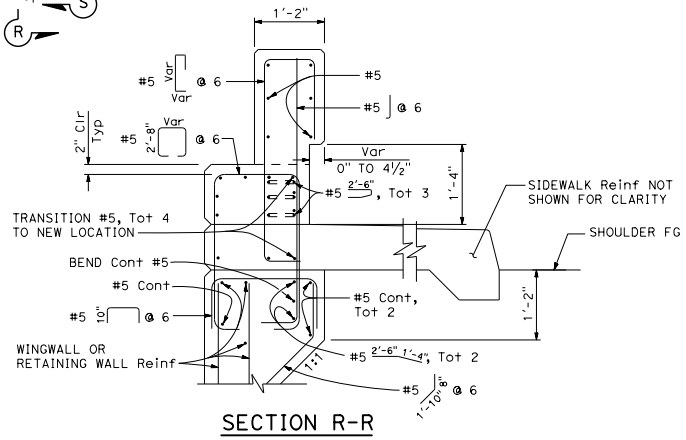

SECTION R-R

STATE OF CALIFORNIA
DEPARTMENT OF TRANSPORTATION

CALIFORNIA ST-76SW BRIDGE RAIL DETAILS No. 3

NO SCALE

B11-217

7-1-26

Return to Table of Contents

Dist	COUNTY	ROUTE	POST MILES TOTAL PROJECT	SHEET No.	TOTAL SHEETS

REGISTERED CIVIL ENGINEER

September 18, 2026

PLANS APPROVAL DATE

REGISTERED PROFESSIONAL ENGINEER Aiman Malak No. C73369 Exp. 12-31-26 CIVIL STATE OF CALIFORNIA

THE STATE OF CALIFORNIA OR ITS OFFICERS OR AGENTS SHALL NOT BE RESPONSIBLE FOR THE ACCURACY OR COMPLETENESS OF SCANNED COPIES OF THIS PLAN SHEET.

NOTE:

1. Repair galvanized surfaces that are damaged.

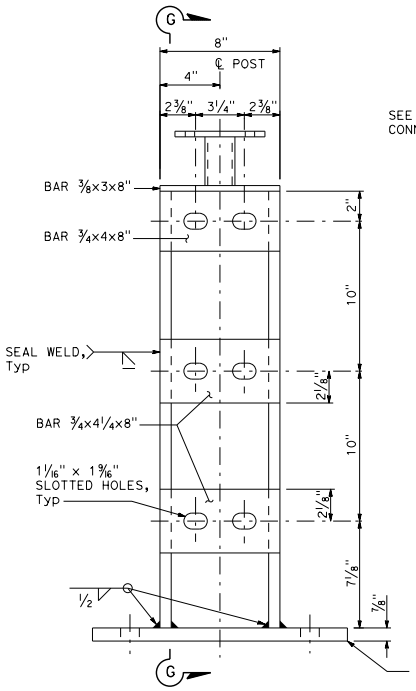

POST DETAIL

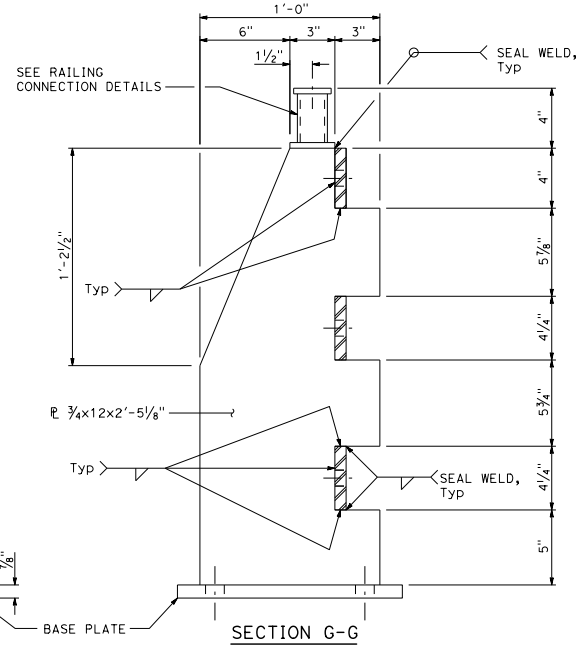

SECTION G-G

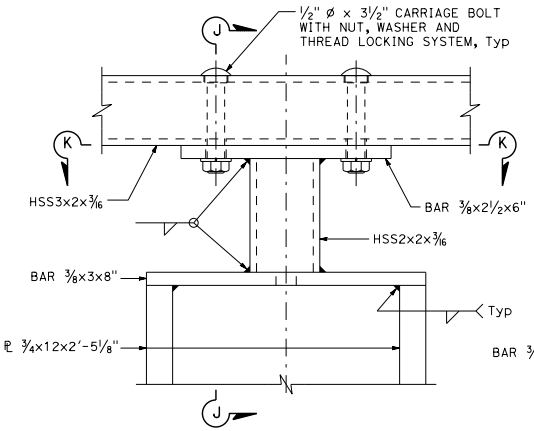

ELEVATION

Bar ¾x4x8" omitted for clarity.

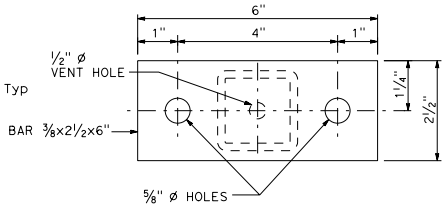

VIEW K-K

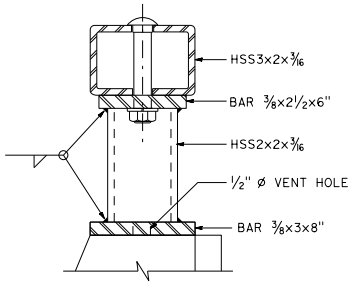

SECTION J-J

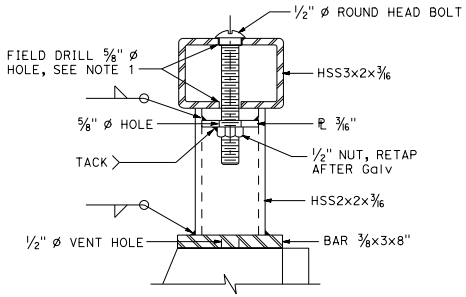

ALTERNATIVE SECTION J-J

RAILING CONNECTION DETAILS

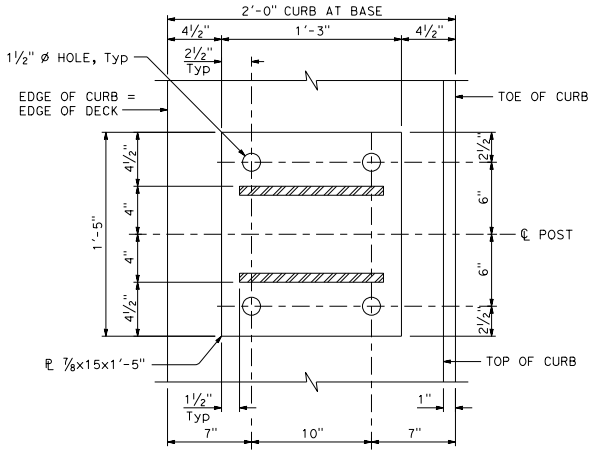

BASE PLATE DETAIL

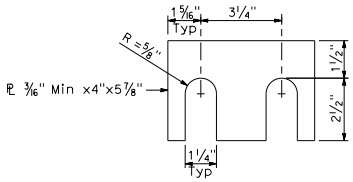

SHIM DETAIL

Shim as needed to get full bearing between posts and HSS rail tubes.

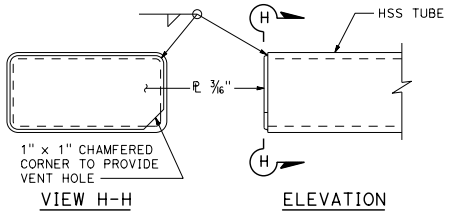

VIEW H-H ELEVATION

RAIL END CAP

STATE OF CALIFORNIA
DEPARTMENT OF TRANSPORTATION

CALIFORNIA BRIDGE RAIL ST-75, ST-75SW, ST-76, AND ST-76SW POST AND RAIL DETAILS

NO SCALE

B11-220

7-1-26

2026 STANDARD PLAN B11-220

Return to Table of Contents

Dist	COUNTY	ROUTE	POST MILES TOTAL PROJECT	SHEET No.	TOTAL SHEETS

REGISTERED CIVIL ENGINEER

September 18, 2026
PLANS APPROVAL DATE

REGISTERED PROFESSIONAL ENGINEER
Aiman Malak
No. C73369
Exp. 12-31-26
CIVIL
STATE OF CALIFORNIA

THE STATE OF CALIFORNIA OR ITS OFFICERS OR AGENTS SHALL NOT BE RESPONSIBLE FOR THE ACCURACY OR COMPLETENESS OF SCANNED COPIES OF THIS PLAN SHEET.

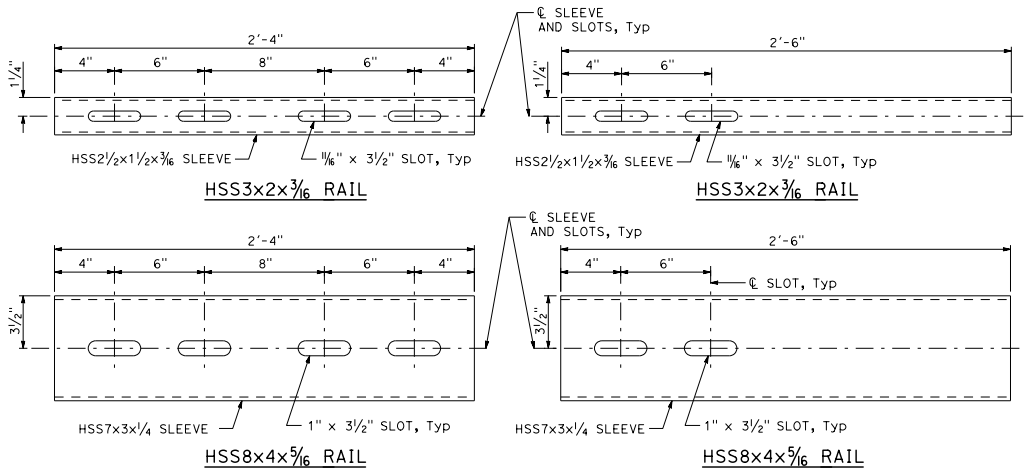

STANDARD SLEEVE DETAILS

EXPANSION SLEEVE DETAILS

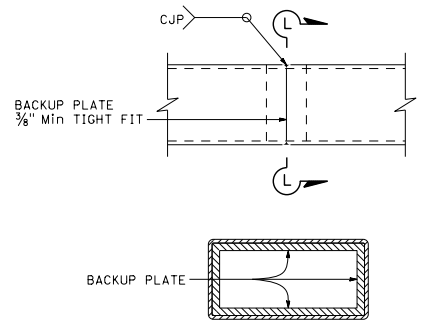

SECTION L-L

ALTERNATE TUBE WELDED STANDARD SPLICE

NOTES:

1. HS bolts with nut and washers, snug tightened, and thread locking system.
2. Use ½" ø x 3 5/16" BOLTS for HSS3x2x3/16. Use ¾" ø x 5 5/16" BOLTS for HSS8x4x5/16.
3. Each rail length must be continuous over a minimum of two posts.
4. Except for expansion splices, not more than one splice for HSS8x4x5/16 is permitted per same side of post.
5. Bridge rail curb height is 6" for ST-75 and ST-75SW, and is 12" for ST-76 and ST-76SW.

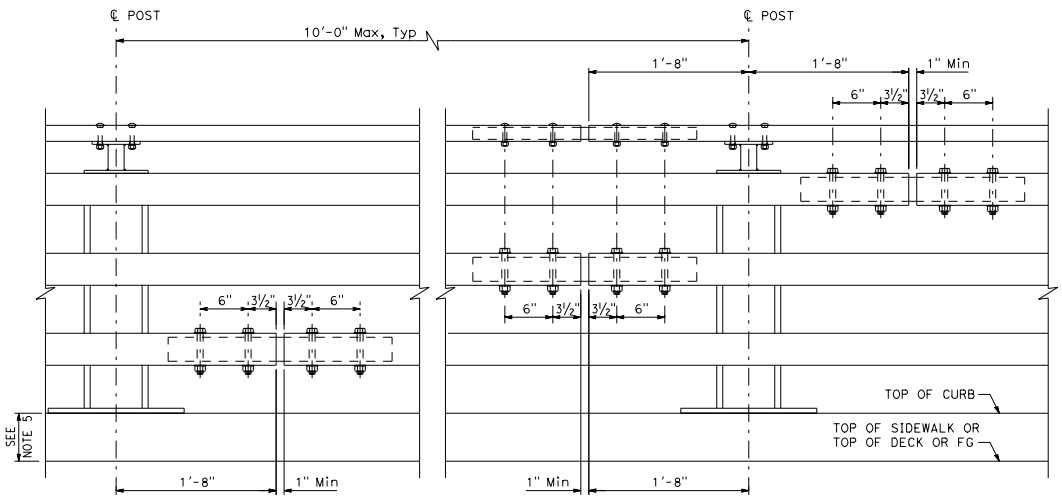

STANDARD SPLICE
See Notes 3 and 4

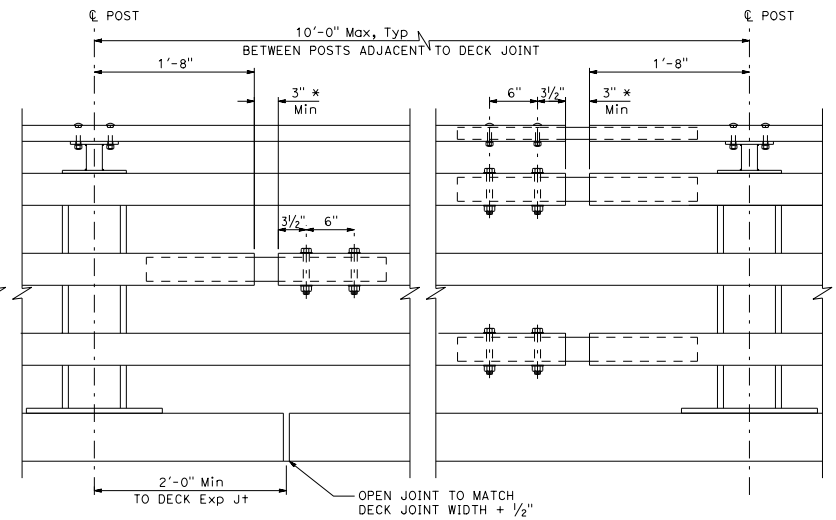

EXPANSION SPLICE
* Match deck or wall joint.
See Notes 3 and 4

STATE OF CALIFORNIA
DEPARTMENT OF TRANSPORTATION

CALIFORNIA BRIDGE RAIL ST-75, ST-75SW, ST-76, AND ST-76SW RAIL SPLICE DETAILS

NO SCALE

B11-221

7-1-26

Return to Table of Contents

Dist	COUNTY	ROUTE	POST MILES TOTAL PROJECT	SHEET No.	TOTAL SHEETS

REGISTERED CIVIL ENGINEER

September 18, 2026
PLANS APPROVAL DATE

REGISTERED PROFESSIONAL ENGINEER Aiman Malak No. C73369 Exp. 12-31-26 CIVIL STATE OF CALIFORNIA

THE STATE OF CALIFORNIA OR ITS OFFICERS OR AGENTS SHALL NOT BE RESPONSIBLE FOR THE ACCURACY OR COMPLETENESS OF SCANNED COPIES OF THIS PLAN SHEET.

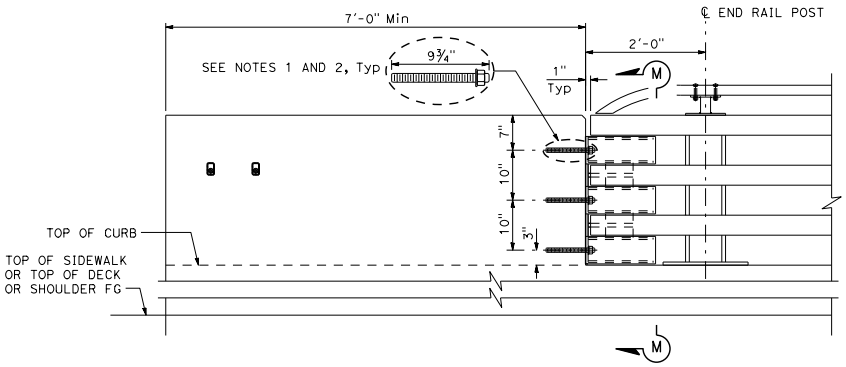

PARAPET SHOE AT DEPARTURE END BLOCK

Parapet shoe connection to approach end block is similar.

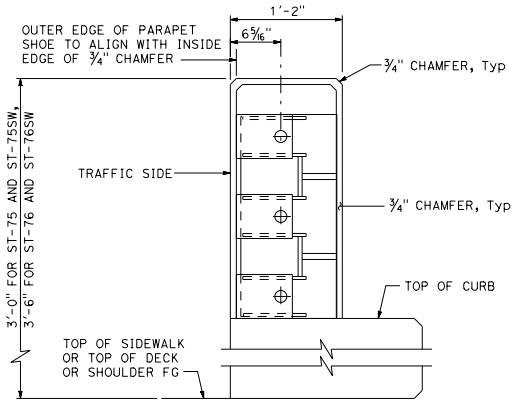

SECTION M-M

Bridge railing not shown for clarity.

NOTES:

1. Anchor bolts must be ⅞" Dia and ASTM F1554 Grade 105 fully threaded rods with heavy hex nut and one hardened washer (1¾" OD) each. Embed threaded rods 8" into concrete anchor block with Drill and Bond (Chemical Adhesive) anchorage system.
2. Drill and Bond (Chemical Adhesive) anchorages are subjected to approval of Engineer. Installation procedure must comply with manufacturer's instructions.

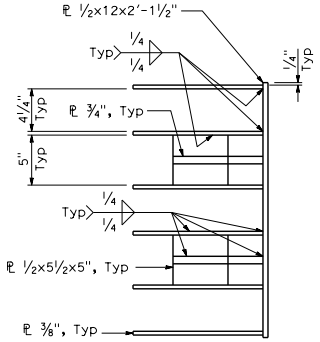

SECTION N-N

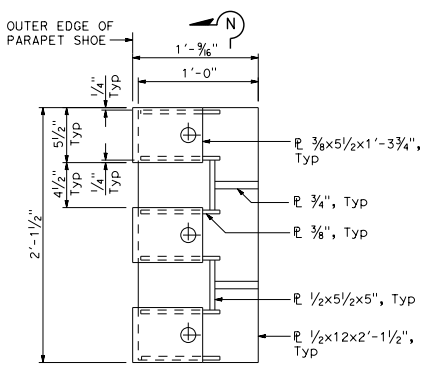

VIEW P-P

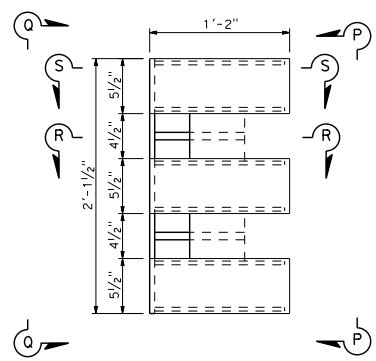

PARAPET SHOE ELEVATION

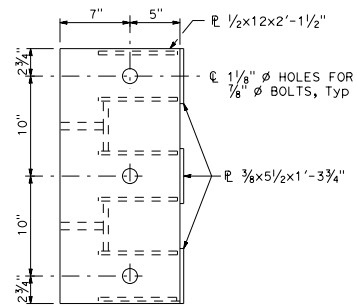

VIEW Q-Q

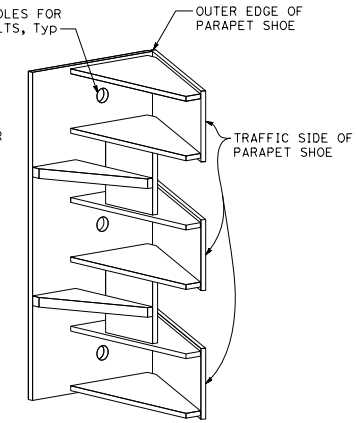

ISOMETRIC VIEW

Isometric rear view
mirrored to show more details.

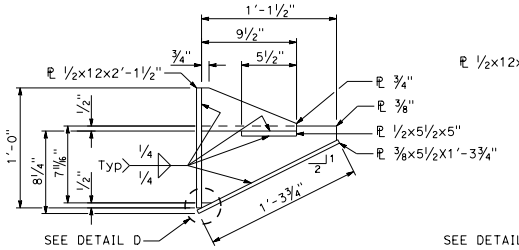

SECTION R-R

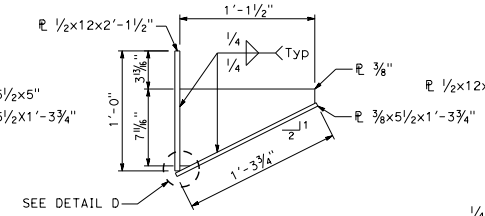

SECTION S-S

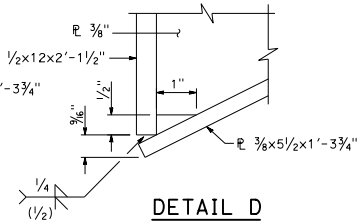

DETAIL D

STATE OF CALIFORNIA
DEPARTMENT OF TRANSPORTATION

CALIFORNIA BRIDGE RAIL ST-75, ST-75SW, ST-76, AND ST-76SW PARAPET SHOE DETAILS

NO SCALE

B11-222

7-1-26

2026 STANDARD PLAN B11-222

Return to Table of Contents

Dist	COUNTY	ROUTE	POST MILES TOTAL PROJECT	SHEET No.	TOTAL SHEETS

REGISTERED CIVIL ENGINEER

September 18, 2026
PLANS APPROVAL DATE

REGISTERED PROFESSIONAL ENGINEER Carl M. Duan No. C59976 Exp. 6-30-28 CIVIL STATE OF CALIFORNIA

THE STATE OF CALIFORNIA OR ITS OFFICERS OR AGENTS SHALL NOT BE RESPONSIBLE FOR THE ACCURACY OR COMPLETENESS OF SCANNED COPIES OF THIS PLAN SHEET.

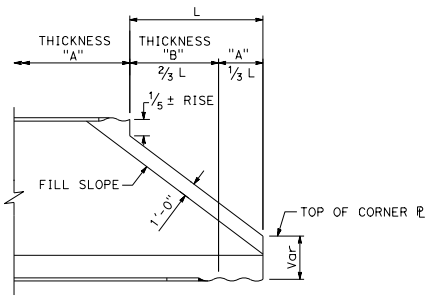

SIDE ELEVATION

NOTE:

Thickness "B" two thicknesses greater than thickness "A" except for 0.249" and 0.280" thicknesses.

Skew-bevels not permitted with Alternative 1. Cutoff dimensions are approximate only and may be varied by fabricator to suit plate layout.

ALTERNATIVE 1

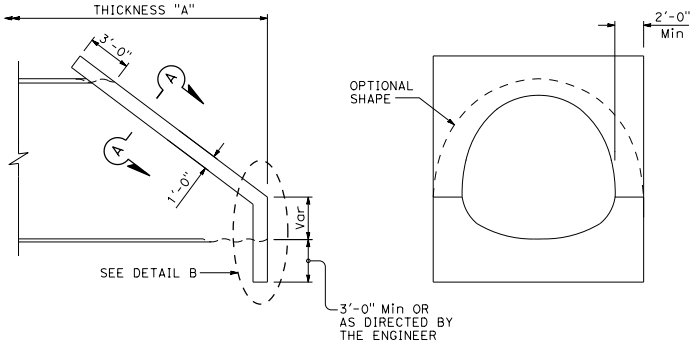

SIDE ELEVATION

END ELEVATION

ALTERNATIVE 2

END BEVELS

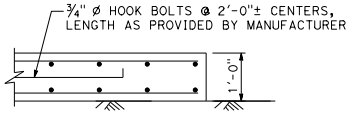

SECTION A-A

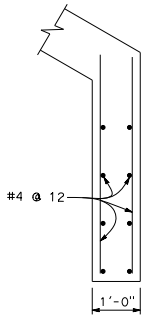

DETAIL B

NOTE:

Reinforce both faces of concrete collar with #4 @ 12 both ways. Maximum skew is 35°.

TABLE A						
GAGE	12	10	8	5	3	1
THICKNESS	0.110"	0.140"	0.170"	0.218"	0.249"	0.280"
SPANS	STRENGTH I SOIL PRESSURE (ksf)					
12'-2" TO 16'-9"	6.0	10.0	12.0	17.0	20.0	22.0
17'-3" TO 20'-4"	4.9	8.1	9.7	13.7	16.2	17.8

MAXIMUM HEIGHT OF FILL										LAYOUT DATA			
GAGE		12	10	12	10	8	5	3	1				
THICKNESS		0.110"	0.140"	0.110"	0.140"	0.170"	0.218"	0.249"	0.280"				
SPAN	RISE	SOIL PRESSURE 6.0 ksf		FOR SOIL PRESSURES, SEE TABLE A						RT	RS	RC	RB
12'-2"	11'-0"	14.0'	14.0'	14.0'	25.0'	31.0'	44.0'	53.0'	58.0'	5'-8"	7'-9"	3'-2"	11'-2"
12'-11"	11'-3"	13.0'	13.0'	13.0'	24.0'	29.0'	42.0'	49.0'	55.0'	6'-1"	7'-11"	3'-2"	12'-0"
13'-2"	11'-11"	13.0'	13.0'	13.0'	23.0'	28.0'	41.0'	48.0'	54.0'	6'-1"	8'-7"	3'-2"	13'-3"
13'-10"	12'-3"	12.0'	12.0'	12.0'	22.0'	27.0'	39.0'	46.0'	51.0'	6'-5"	9'-0"	3'-2"	13'-8"
14'-1"	12'-10"	12.0'	12.0'	12.0'	21.0'	26.0'	38.0'	45.0'	50.0'	6'-5"	9'-7"	3'-2"	15'-2"
14'-6"	13'-6"	11.0'	11.0'	11.0'	20.0'	25.0'	37.0'	44.0'	48.0'	6'-6"	10'-11"	3'-2"	14'-6"
14'-10"	14'-0"	11.0'	11.0'	11.0'	20.0'	24.0'	36.0'	42.0'	47.0'	6'-7"	11'-4"	3'-2"	16'-0"
15'-6"	14'-4"	10.0'	10.0'	10.0'	19.0'	23.0'	34.0'	40.0'	45.0'	7'-0"	11'-6"	3'-2"	16'-9"
15'-9"	15'-1"	10.0'	10.0'	10.0'	18.0'	22.0'	33.0'	40.0'	44.0'	6'-11"	12'-6"	3'-2"	17'-8"
16'-4"	15'-5"	9.0'	9.0'	9.0'	18.0'	22.0'	32.0'	38.0'	42.0'	7'-2"	13'-1"	3'-2"	17'-11"
16'-5"	16'-1"	8.0'	8.0'	8.0'	17.0'	21.0'	31.0'	37.0'	41.0'	7'-4"	13'-2"	3'-2"	22'-7"
16'-9"	16'-3"	8.0'	8.0'	9.0'	17.0'	20.0'	30.0'	36.0'	40.0'	7'-5"	13'-11"	3'-2"	20'-7"
17'-3"	17'-0"	11.0'	11.0'	8.0'	16.0'	20.0'	29.0'	36.0'	39.0'	7'-6"	14'-6"	3'-11"	17'-11"
18'-4"	16'-11"	10.0'	10.0'	6.0'	15.0'	19.0'	28.0'	33.0'	37.0'	8'-3"	13'-1"	3'-11"	20'-9"
19'-2"	17'-2"	*	9.0'	*	14.0'	18.0'	26.0'	32.0'	35.0'	8'-9"	13'-0"	3'-11"	22'-0"
19'-6"	17'-7"		9.0'		14.0'	17.0'	25.0'	31.0'	34.0'	8'-11"	13'-2"	3'-11"	24'-9"
20'-4"	17'-10"		9.0'		13.0'	16.0'	24.0'	29.0'	32.0'	9'-5"	13'-0"	3'-11"	26'-2"

* - Strutting required, see Note 1.

NOTES:

1. For strutting requirements of structural steel plate vehicular undercrossing during construction, see Standard Plan D88A.
2. Minimum cover from crown to shoulder hinge point = 5'-0".
3. Backfill shall be brought up uniformly on both sides of the structure.
4. Minimum cover for construction loading, see Standard Plan D88.

DESIGN NOTES:

DESIGN:

AASHTO LRFD Bridge Design Specifications, with California Amendments.

SOIL:

γ = 140 pcf

RENIFORCED CONCRETE:

f_y = 60 ksi
n = 8
f'_c = 3.6 ksi

STRUCTURAL STEEL PLATE:

6" x 2" Annular Corrugations
f_y = 33 ksi
Specified thickness includes galvanization

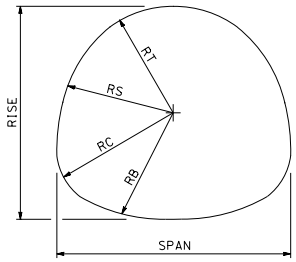

STATE OF CALIFORNIA
DEPARTMENT OF TRANSPORTATION

STRUCTURAL STEEL PLATE VEHICULAR UNDERCROSSING

NO SCALE

B14-1

2026 STANDARD PLAN B14-1

7-1-26

Return to Table of Contents

Dist	COUNTY	ROUTE	POST MILES TOTAL PROJECT	SHEET No.	TOTAL SHEETS

M. Rossini
REGISTERED ELECTRICAL ENGINEER

September 18, 2026
PLANS APPROVAL DATE

Majid Hosseini
No. E21503
Exp. 6-30-28
ELECTRICAL
REGISTERED PROFESSIONAL ENGINEER
STATE OF CALIFORNIA

THE STATE OF CALIFORNIA OR ITS OFFICERS OR AGENTS SHALL NOT BE RESPONSIBLE FOR THE ACCURACY OR COMPLETENESS OF SCANNED COPIES OF THIS PLAN SHEET.

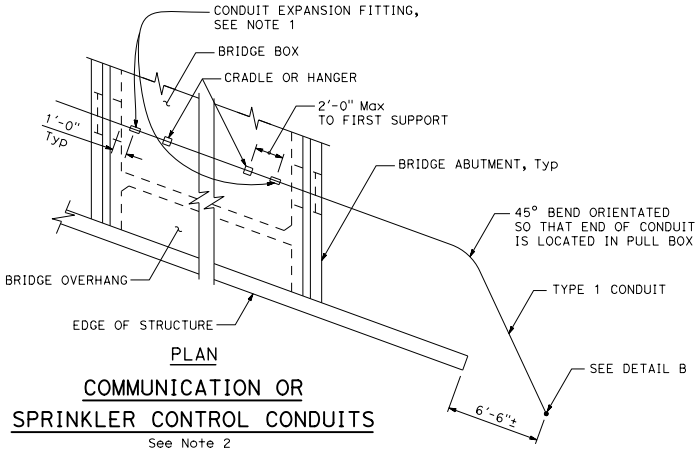

PLAN

COMMUNICATION OR SPRINKLER CONTROL CONDUITS

See Note 2

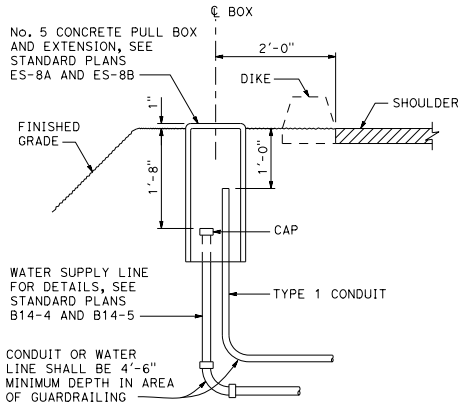

DETAIL B

NOTES:

1. See Standard Plan ES-9B Detail X. Provide for a minimum movement or 1½" (T+ ½") at each abutment where no expansion joints are located. Other expansion assemblies shall provide movements according to adjacent expansion joint size. Supports are to be located 2'-0" maximum each side of expansion assemblies.
2. Details of electrical conduit system are to supplement those shown on the Project Plans.
3. The maximum conduit sizes shown are for a straight run across the bridge without pull boxes.
4. In a bridge railing with lighting standards or pull boxes, reduce size of affected conduits as needed.
5. Cradles to be precast concrete.
6. Secure all cradles to bottom slab of bridge with epoxy adhesive, except as provided below.
7. Under the first cradle support inside bridge near abutment or hinge, epoxy 12 gage galvanize steel sheet 2'-8" x 1'-4" to the floor of cell. Do not secure cradle to steel sheet. Cradle shall be free to slide to accommodate lateral movement.

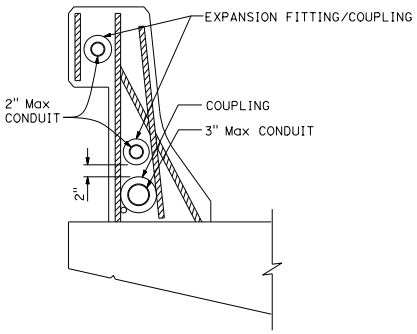

CONDUIT IN BRIDGE RAILING

See Notes 3 and 4

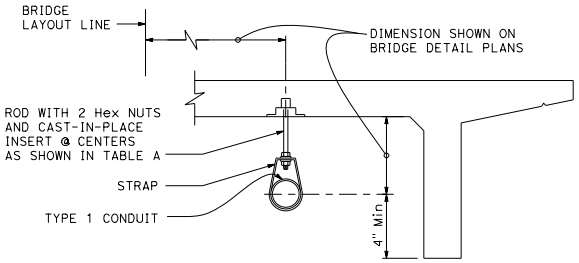

OTHER THAN BOX GIRDER CONDUIT HANGER SUPPORT DETAILS

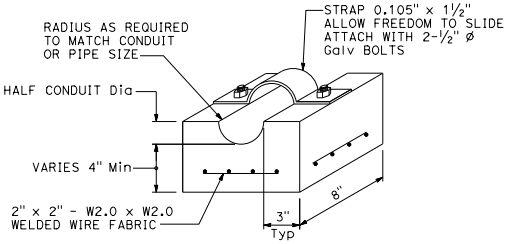

CONCRETE CRADLE

See Notes 5 and 6

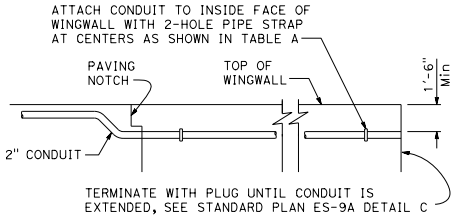

CONDUIT IN OVERHANG-WINGWALL DETAIL

CONDUIT LOCATIONS

(For 2" conduit only except as noted)
For location, see Bridge Detail plans.

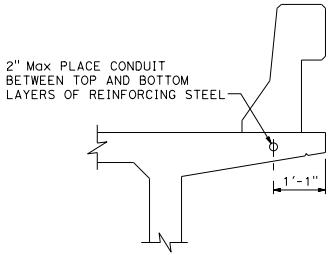

CONDUIT IN OVERHANG

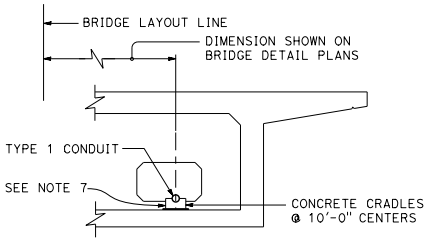

BOX GIRDER

CONDUIT SUPPORT DETAILS

See Note 7

TABLE A

CONDUIT	2½" OR LESS	3"	3½"
ROD	⅜" ø	½" ø	⅝" ø
STRAP	0.090" x 1"	0.090" x 1"	0.105" x 1½"
SUPPORT SPACING	10'-0"	10'-0"	10'-0"

STATE OF CALIFORNIA
DEPARTMENT OF TRANSPORTATION

COMMUNICATION AND SPRINKLER CONTROL CONDUITS (CONDUITS LESS THAN 4")

NO SCALE

B14-3

2026 STANDARD PLAN B14-3

7-1-26

Return to Table of Contents

Dist	COUNTY	ROUTE	POST MILES TOTAL PROJECT	SHEET No.	TOTAL SHEETS

Ali A Moradi
REGISTERED CIVIL ENGINEER

September 18, 2026
PLANS APPROVAL DATE

REGISTERED PROFESSIONAL ENGINEER
Ali A. Moradi
No. C45273
Exp. 9-30-26
CIVIL
STATE OF CALIFORNIA

THE STATE OF CALIFORNIA OR ITS OFFICERS OR AGENTS SHALL NOT BE RESPONSIBLE FOR THE ACCURACY OR COMPLETENESS OF SCANNED COPIES OF THIS PLAN SHEET.

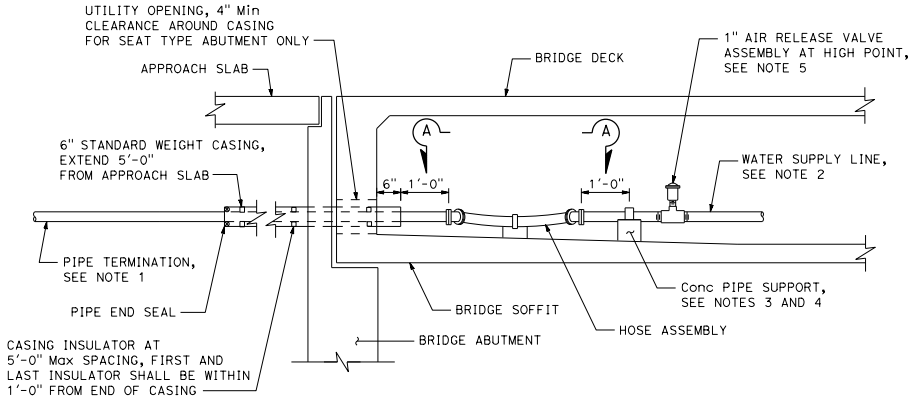

BOX GIRDER INSTALLATION

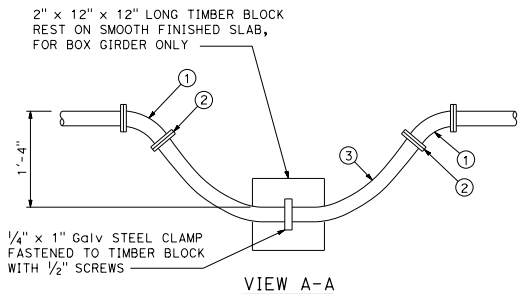

VIEW A-A

HOSE ASSEMBLY

NUMBERED ITEM

1. 45° flanged elbow with insulated flange connection
2. Flanged hose fitting
3. Hose 6'-6" in length (size shall be same as pipe)

NOTES:

1. Extend pipe 5'-0"+ beyond the edge of shoulder or as shown on bridge plans. Terminate in a pull box as shown on Standard Plan B14-3, Detail B.
2. Water supply line shall be installed parallel to bridge soffit or deck.
3. For concrete pipe support, pipe shall be tightly clamped at the pipe support located halfway between hose assemblies. At all other supports, pipe clamp shall be shimmed with steel washer plate to provide ¼" clearance between pipe and clamp.
4. Maximum spacing between pipe hangers or supports shall be 10'-0" unless otherwise detailed on the plans.
5. Install air release valve using threaded tee or pipe saddle.
6. Openings through diaphragm and bent caps shall be 6" diameter unless otherwise detailed on the plans.
7. For details of pipe hanger and concrete pipe support, see Standard Plan B14-5.
8. These details are not designed for seismic and wind loads.

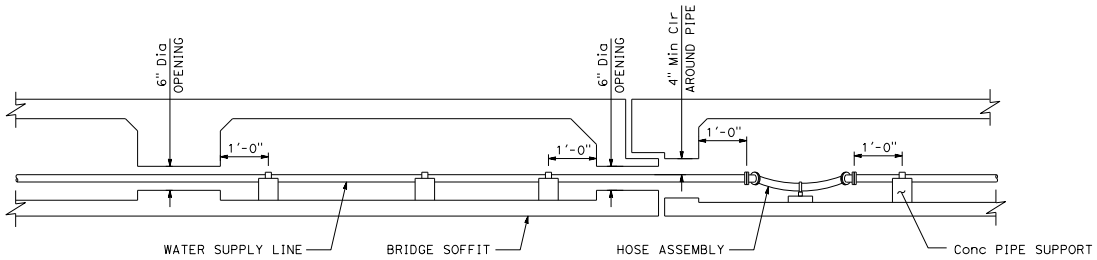

PIPE INSTALLATION AT HINGE

Same for hanger type installation

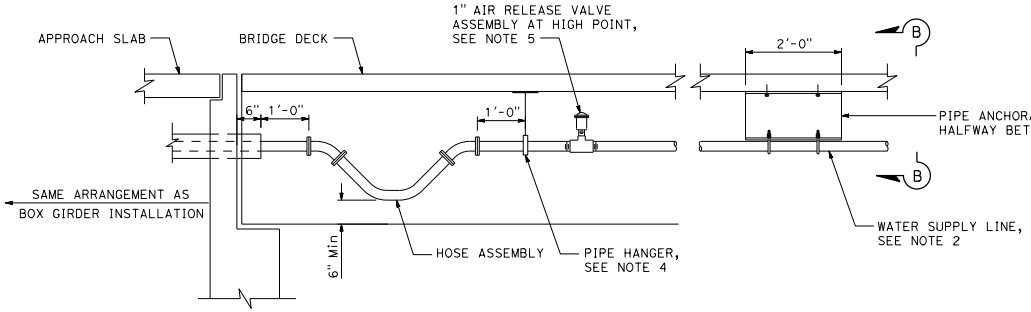

INSTALLATION FOR OTHER STRUCTURE TYPES

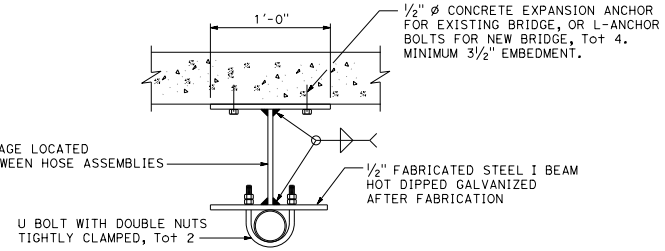

VIEW B-B

STATE OF CALIFORNIA
DEPARTMENT OF TRANSPORTATION

WATER SUPPLY LINE (BRIDGE) (PIPE SIZES LESS THAN 4")

NO SCALE

B14-4

2026 STANDARD PLAN B14-4

7-1-26

Return to Table of Contents

Dist	COUNTY	ROUTE	POST MILES TOTAL PROJECT	SHEET No.	TOTAL SHEETS

Ali A Moradi
REGISTERED CIVIL ENGINEER

September 18, 2026
PLANS APPROVAL DATE

REGISTERED PROFESSIONAL ENGINEER
Ali A. Moradi
No. C45273
Exp. 9-30-26
CIVIL
STATE OF CALIFORNIA

THE STATE OF CALIFORNIA OR ITS OFFICERS OR AGENTS SHALL NOT BE RESPONSIBLE FOR THE ACCURACY OR COMPLETENESS OF SCANNED COPIES OF THIS PLAN SHEET.

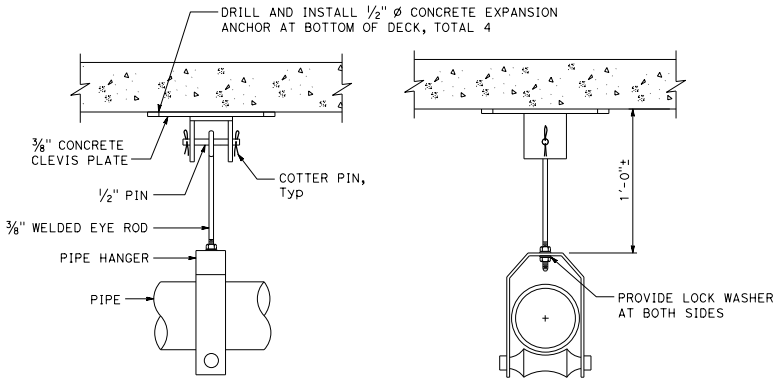

FRONT VIEW

SIDE VIEW

FOR EXISTING BRIDGE

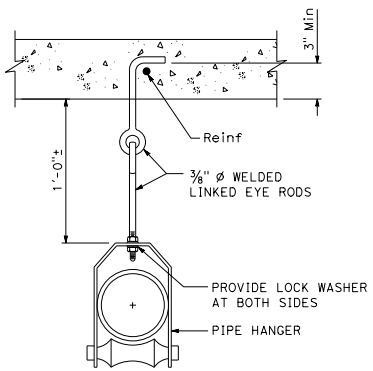

FOR NEW BRIDGE

PIPE HANGER

NOTE:

1. These details are not designed for seismic and wind loads.

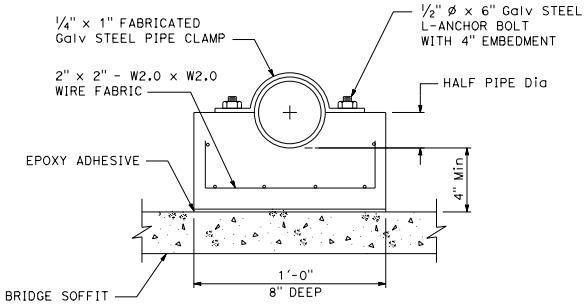

CONCRETE PIPE SUPPORT

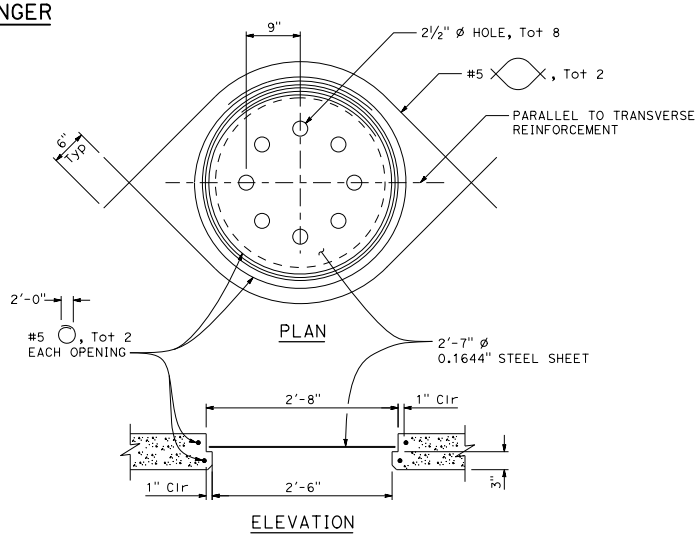

ELEVATION

Locate where called for on bridge plans.
Adjust reinforcement to clear opening.
Plate must be installed before top deck is placed.

SOFFIT ACCESS OPENING

STATE OF CALIFORNIA
DEPARTMENT OF TRANSPORTATION

WATER SUPPLY LINE (DETAILS) (PIPE SIZES LESS THAN 4")

NO SCALE

B14-5

7-1-26

2026 STANDARD PLAN B14-5

Return to Table of Contents

Dist	COUNTY	ROUTE	POST MILES TOTAL PROJECT	SHEET No.	TOTAL SHEETS

REGISTERED CIVIL ENGINEER

September 18, 2026
PLANS APPROVAL DATE

REGISTERED PROFESSIONAL ENGINEER
Aiman Malak
No. C73369
Exp. 12-31-26
CIVIL
STATE OF CALIFORNIA

THE STATE OF CALIFORNIA OR ITS OFFICERS OR AGENTS SHALL NOT BE RESPONSIBLE FOR THE ACCURACY OR COMPLETENESS OF SCANNED COPIES OF THIS PLAN SHEET.

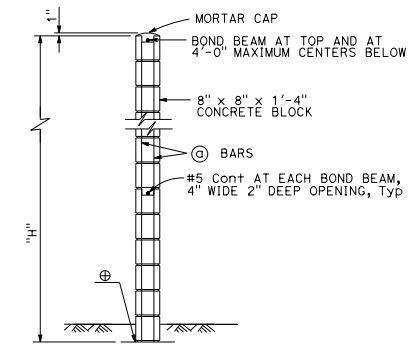

H=6'-0" THRU H=10'-0"

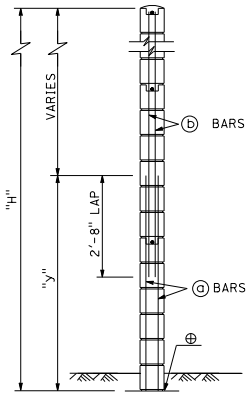

H=12'-0" THRU H=16'-0"

For details not shown, see H=6'-0" thru H=10'-0".

TYPICAL SECTION

⊕ Full mortar bed at bottom of wall

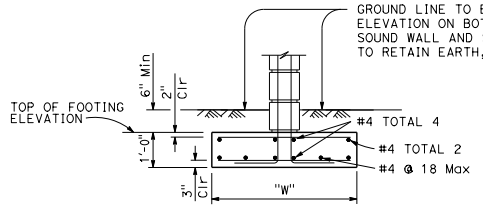

CASE 1

For details not shown, see Case 2. Level ground (±10%) on both sides of the sound wall.

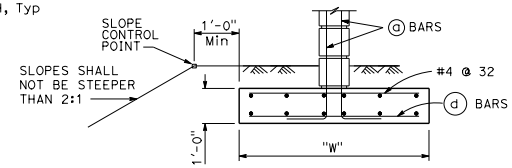

CASE 2

For details not shown, see Case 1. Level ground (±10%) on the traffic side of the sound wall and sloping ground on the opposite side.

SPREAD FOOTING SECTION

SOUND WALL REINFORCEMENT TABLE			
MAXIMUM H	ⓐ BARS @ 1'-4" Max	ⓑ BARS @ 1'-4" Max	"y"
6'-0"	#4	———	———
8'-0"	#4	———	———
10'-0"	#4	———	———
12'-0"	#5	#4	6'-0"
14'-0"	#6	#4	8'-0"
16'-0"	#6	#4	10'-0"

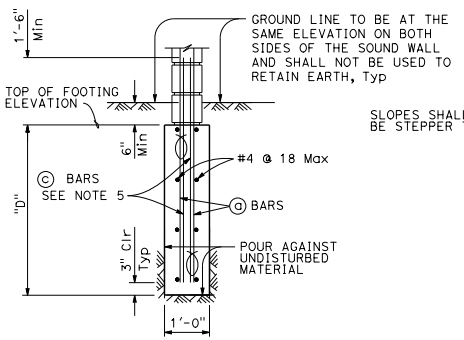

CASE 1

For details not shown, see Case 2. Level ground (±10%) on both sides of the sound wall.

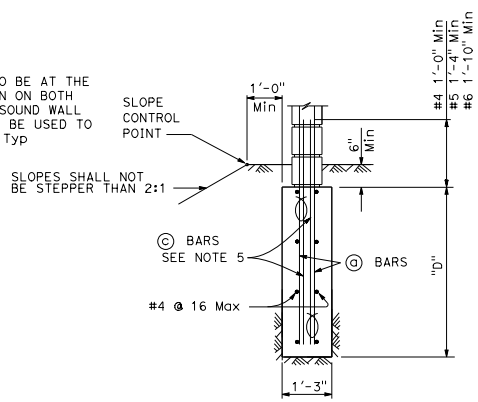

CASE 2

For details not shown, see Case 1. Level ground (±10%) on one side of the sound wall and sloping ground on the opposite side.

TRENCH FOOTING SECTION

TRENCH FOOTING						
MAXIMUM H	CASE 1			CASE 2		ⓒ BARS @ 1'-4" Max
	Ø = 25 Min	Ø = 30 Min	Ø = 35 Min	Ø = 30 Min	Ø = 35 Min	
	D	D	D	D	D	
6'-0"	5'-3"	4'-3"	3'-9"	7'-9"	5'-0"	———
8'-0"	6'-0"	5'-0"	4'-6"	8'-9"	6'-0"	#4
10'-0"	6'-9"	5'-9"	5'-0"	10'-0"	6'-9"	#4
12'-0"	7'-9"	6'-6"	5'-6"	11'-0"	7'-9"	#5
14'-0"	8'-6"	7'-3"	6'-0"	11'-9"	8'-6"	#5
16'-0"	9'-3"	7'-9"	6'-6"	12'-9"	9'-3"	#6

Case 1 - Level ground (±10%) on both sides of the sound wall.
Case 2 - Level ground (±10%) on one side of the sound wall and sloping ground on opposite side.

SPREAD FOOTING		
MAXIMUM H	W	ⓓ BARS
6'-0"	3'-3"	#5 @ 16
8'-0"	4'-0"	#5 @ 16
10'-0"	5'-0"	#5 @ 16
12'-0"	5'-9"	#5 @ 16
14'-0"	6'-6"	#4 @ 8
16'-0"	7'-6"	#4 @ 8

LEGEND:

Bundled reinforcement

NOTES:

1. For type of block and joint finish, see other sheets.
2. When blocks are laid in stacked bond, ladder type, galvanized joint reinforcement shall be provided. A minimum of 2-9 gauge wires continuous at 4'-0" maximum to be used. Locate reinforcement in joints that are at the approximate midpoint between bond beams.
3. Horizontal joints shall be tooled concave or weathered. vertical joints shall be tooled concave or raked.
4. For intermediate wall heights that are between the "H's" given, use the tabular information for the next higher "H".
5. Bundle additional ⓒ bars with typical ⓐ bars.
6. If wall is placed behind traffic barriers, clear distance from face of barrier to face of wall shall exceed 4'-0". Wall is not designed for impact loading.
7. Ultimate spread footing factored bearing pressure demand, q_o = 1.25 ksf, B' = W/3 Where B' is the effective footing width (ft).

STATE OF CALIFORNIA
DEPARTMENT OF TRANSPORTATION

SOUND WALL MASONRY BLOCK ON FOOTING DETAILS (1)

NO SCALE

B15-1

2026 STANDARD PLAN B15-1

7-1-26

Return to Table of Contents

Dist	COUNTY	ROUTE	POST MILES TOTAL PROJECT	SHEET No.	TOTAL SHEETS

REGISTERED CIVIL ENGINEER

September 18, 2026

PLANS APPROVAL DATE

REGISTERED PROFESSIONAL ENGINEER Aiman Malak No. C73369 Exp. 12-31-26 CIVIL STATE OF CALIFORNIA

THE STATE OF CALIFORNIA OR ITS OFFICERS OR AGENTS SHALL NOT BE RESPONSIBLE FOR THE ACCURACY OR COMPLETENESS OF SCANNED COPIES OF THIS PLAN SHEET.

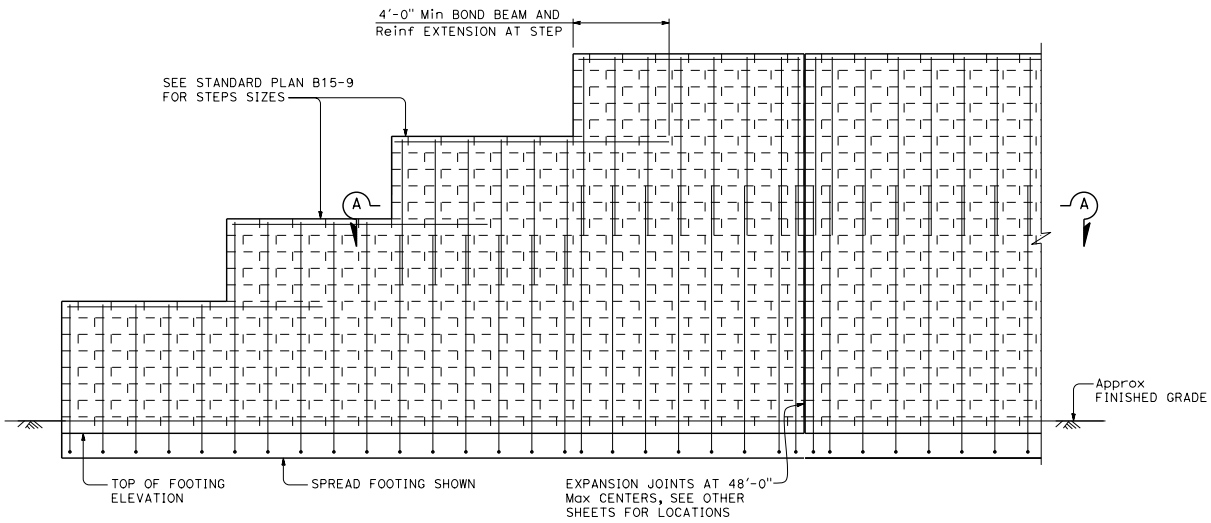

ELEVATION

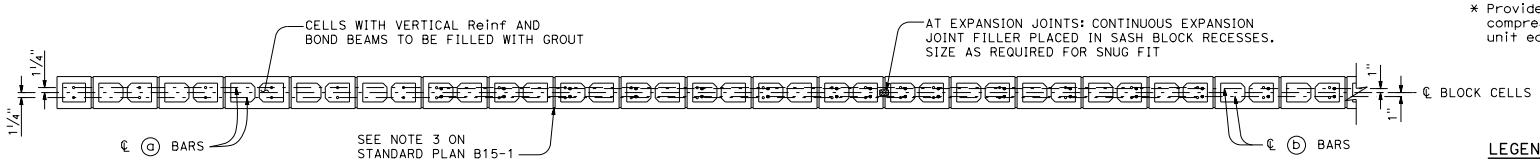

SECTION A-A

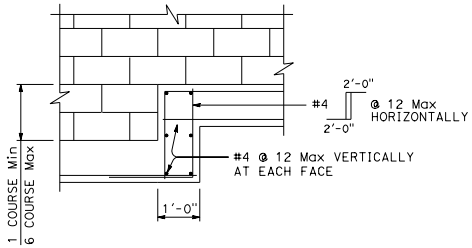

SPREAD FOOTING

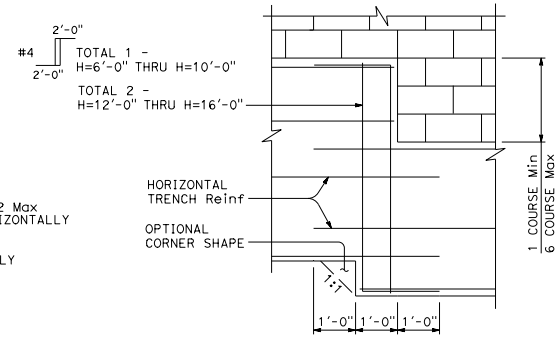

TRENCH FOOTING

FOOTING STEP DETAILS

NOTE:

1. For details not shown, see Standard Plan B15-1.

DESIGN NOTES:

DESIGN:

AASHTO LRFD Bridge Design Specifications,
8th Edition 2017 with California Amendment,
Preface date April 2019
TMS 402-16
2019 California Building Code

DESIGN WIND LOAD:

36.5 psf

DESIGN SEISMIC LOAD:

0.57 Dead Load

REINFORCED CONCRETE AND CONCRETE MASONRY:

f_y = 60 ksi
f'_c = 3.6 ksi
f'_m = 2,000 psi *

* Provide materials to achieve the net compressive strength of concrete masonry unit equal or greater than the specified f'_m.

LEGEND:

- ⓐ BARS
- ⓑ BARS

STATE OF CALIFORNIA
DEPARTMENT OF TRANSPORTATION

SOUND WALL MASONRY BLOCK ON FOOTING DETAILS (2)

NO SCALE

B15-2

2026 STANDARD PLAN B15-2

7-1-26

Return to Table of Contents

Dist	COUNTY	ROUTE	POST MILES TOTAL PROJECT	SHEET No.	TOTAL SHEETS

REGISTERED CIVIL ENGINEER

September 18, 2026
PLANS APPROVAL DATE

REGISTERED PROFESSIONAL ENGINEER
Aiman Malak
No. C73369
Exp. 12-31-26
CIVIL
STATE OF CALIFORNIA

THE STATE OF CALIFORNIA OR ITS OFFICERS OR AGENTS SHALL NOT BE RESPONSIBLE FOR THE ACCURACY OR COMPLETENESS OF SCANNED COPIES OF THIS PLAN SHEET.

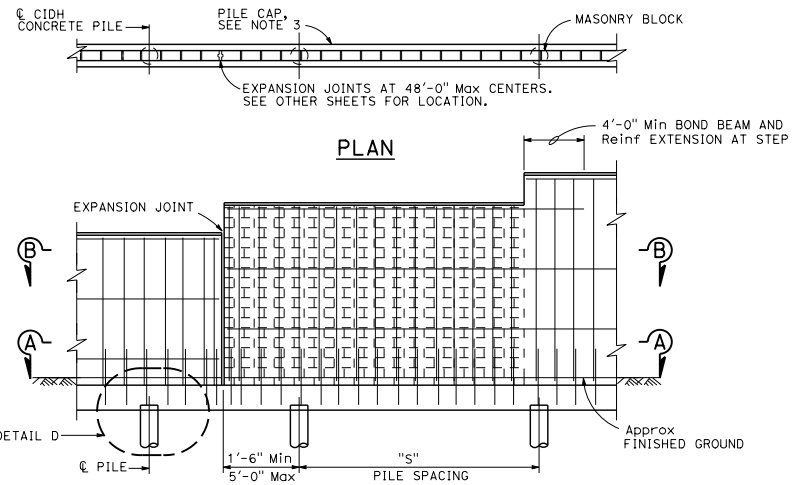

SOUND WALL REINFORCEMENT TABLE

MAXIMUM H	ⓐ BARS @ 1'-4" Max	ⓑ BARS @ 1'-4" Max	"y"
6'-0"	#4		
8'-0"	#4		
10'-0"	#4		
12'-0"	#5	#4	6'-0"
14'-0"	#6	#4	8'-0"
16'-0"	#6	#4	10'-0"

NOTES:

1. For Detail D, see Standard Plan B15-5.
2. For sections and details not shown, see Standard Plans B15-4 and B15-5.
3. See Standard Plan B15-9 for other details.

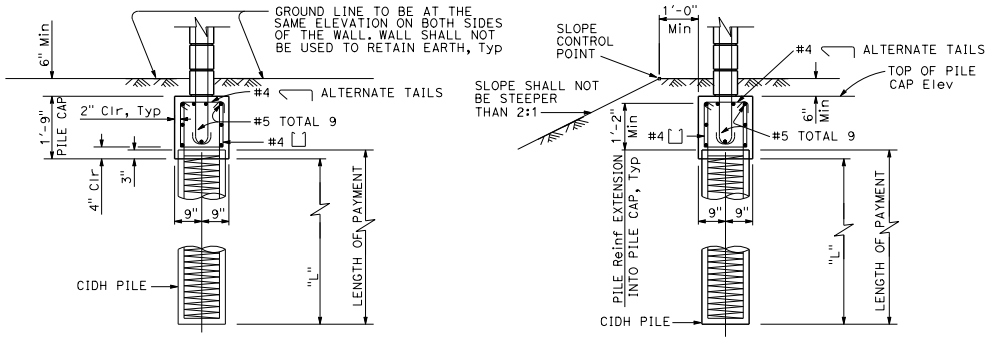

CASE 1

For details not shown, see Case 2.
Level ground (±10%) on both sides of the sound wall.

CASE 2

For details not shown, see Case 1.
Level ground (±10%) on one side of the sound wall and sloping ground on the opposite side.

PILE CAP SECTION

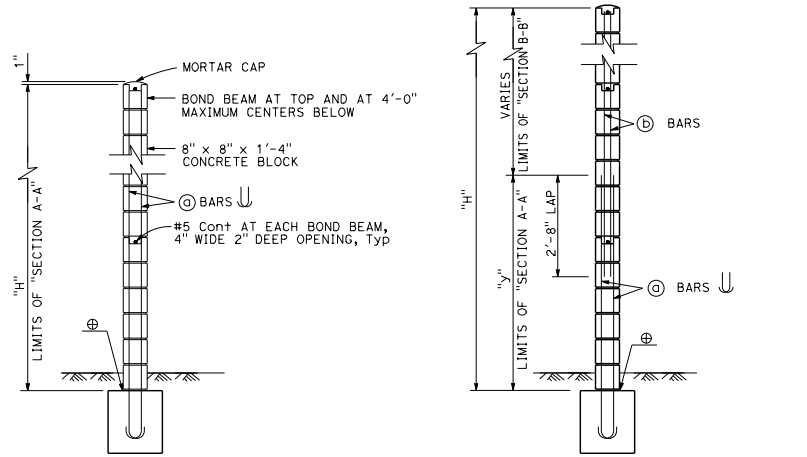

H=6'-0" THRU H=10'-0"

H=12'-0" THRU H=16'-0"
For details not shown, see H=6'-0" thru H=10'-0".

TYPICAL SECTION

⊕ Full mortar bed at bottom of wall.

STATE OF CALIFORNIA
DEPARTMENT OF TRANSPORTATION

SOUND WALL MASONRY BLOCK ON PILE CAP DETAILS (1)

NO SCALE

B15-3

2026 STANDARD PLAN B15-3

7-1-26

Return to Table of Contents

Dist	COUNTY	ROUTE	POST MILES TOTAL PROJECT	SHEET No.	TOTAL SHEETS

REGISTERED CIVIL ENGINEER

September 18, 2026
PLANS APPROVAL DATE

REGISTERED PROFESSIONAL ENGINEER
Aiman Malak
No. C73369
Exp. 12-31-26
CIVIL
STATE OF CALIFORNIA

THE STATE OF CALIFORNIA OR ITS OFFICERS OR AGENTS SHALL NOT BE RESPONSIBLE FOR THE ACCURACY OR COMPLETENESS OF SCANNED COPIES OF THIS PLAN SHEET.

GENERAL NOTES:

1. For type of block and joint finish, see other sheets.
2. When blocks are laid in stacked bond, ladder type, galvanized joint reinforcement shall be provided. A minimum of 2-9 gauge wires continuous at 4'-0" maximum to be used. Locate reinforcement in joints that are at the approximate midpoint between bond beams.
3. Horizontal joints shall be tooled concave or weathered. Vertical joints shall be tooled concave or raked.
4. For intermediate wall heights that are between the "H's" given, use the tabular information for the next higher "H".
5. If wall is placed behind traffic barriers, clear distance from face of barrier to face of wall shall exceed 4'-0". Wall is not designed for impact loading.

DESIGN NOTES

DESIGN:
AASHTO LRFD Bridge Design Specifications,
8th Edition 2017 with California Amendment,
Preface date April 2019
TMS 402-16
2019 California Building Code

DESIGN WIND LOAD:
36.5 psf

DESIGN SEISMIC LOAD:
0.57 Dead Load

REINFORCED CONCRETE AND CONCRETE MASONRY:

f_y = 60 ksi
f'_c = 3.6 ksi
f'_m = 2000 psi *

* Provide materials to achieve the net compressive strength of concrete masonry unit equal or greater than the specified f'_m.

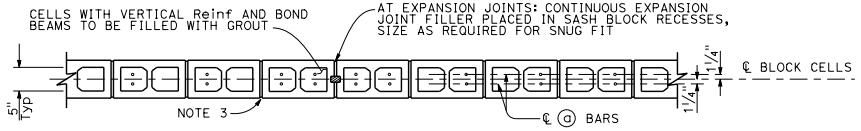

SECTION A-A

For details not shown, see other sections.

H=6'-0" THRU H=10'-0"

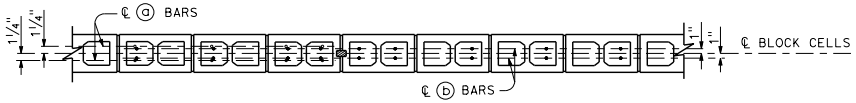

SECTION A-A **SECTION B-B**

For details not shown, see other sections.

H=12'-0" THRU H=16'-0"

STATE OF CALIFORNIA
DEPARTMENT OF TRANSPORTATION

SOUND WALL
MASONRY BLOCK ON PILE CAP
DETAILS (2)

NO SCALE

B15-4

7-1-26

2026 STANDARD PLAN B15-4

Return to Table of Contents

Dist	COUNTY	ROUTE	POST MILES TOTAL PROJECT	SHEET No.	TOTAL SHEETS

REGISTERED CIVIL ENGINEER

September 18, 2026
PLANS APPROVAL DATE

REGISTERED PROFESSIONAL ENGINEER
Aiman Malak
No. C73369
Exp. 12-31-26
CIVIL
STATE OF CALIFORNIA

THE STATE OF CALIFORNIA OR ITS OFFICERS OR AGENTS SHALL NOT BE RESPONSIBLE FOR THE ACCURACY OR COMPLETENESS OF SCANNED COPIES OF THIS PLAN SHEET.

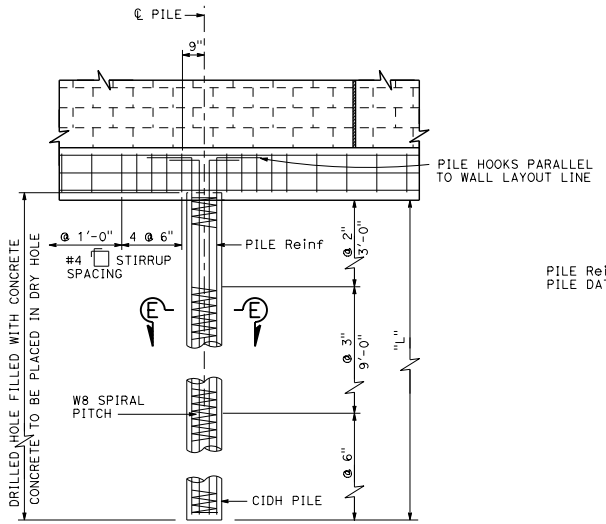

DETAIL D

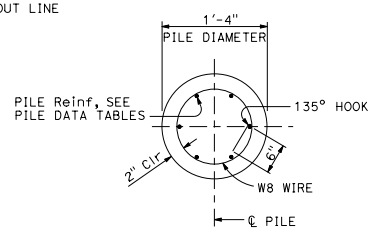

SECTION E-E

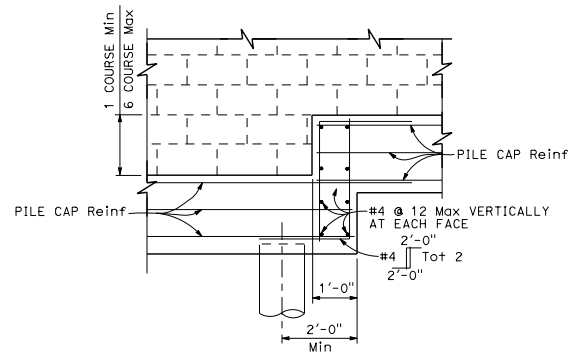

PILE CAP STEP DETAIL

NOTE:

1. For details not shown, see Standard Plans B15-3 and B15-4.

CASE 1 : PILE DATA TABLE										
MAXIMUM H	ø = 25 Min			ø = 30 Min			ø = 35 Min			MAXIMUM H
	S	L	PILE Reinf	S	L	PILE Reinf	S	L	PILE Reinf	
6'-0"	16'-0"	9'-6"	#6 Tot 6	16'-0"	7'-6"	#6 Tot 6	16'-0"	6'-0"	#6 Tot 6	6'-0"
8'-0"	16'-0"	10'-6"	#6 Tot 7	16'-0"	8'-6"	#6 Tot 7	16'-0"	7'-0"	#6 Tot 7	8'-0"
10'-0"	16'-0"	11'-6"	#7 Tot 6	16'-0"	9'-6"	#7 Tot 6	16'-0"	8'-0"	#7 Tot 6	10'-0"
12'-0"	15'-0"	12'-6"	#8 Tot 7	16'-0"	10'-6"	#8 Tot 7	16'-0"	8'-6"	#8 Tot 7	12'-0"
14'-0"	13'-0"	13'-0"	#8 Tot 7	14'-0"	11'-0"	#8 Tot 7	14'-0"	9'-0"	#8 Tot 7	14'-0"
16'-0"	12'-0"	13'-6"	#8 Tot 7	13'-0"	11'-6"	#8 Tot 7	13'-0"	9'-6"	#8 Tot 7	16'-0"

Case 1 - Level ground (±10%) on both sides of the sound wall.

CASE 2 : PILE DATA TABLE							
MAXIMUM H	ø = 30 Min			ø = 35 Min			MAXIMUM H
	S	L	PILE Reinf	S	L	PILE Reinf	
6'-0"	16'-0"	13'-0"	#8 Tot 7	16'-0"	9'-6"	#6 Tot 7	6'-0"
8'-0"	16'-0"	15'-0"	#8 Tot 7	16'-0"	10'-6"	#7 Tot 6	8'-0"
10'-0"	15'-0"	16'-0"	#8 Tot 7	16'-0"	12'-0"	#7 Tot 7	10'-0"
12'-0"	12'-0"	16'-0"	#8 Tot 7	15'-0"	13'-6"	#8 Tot 7	12'-0"
14'-0"	10'-0"	16'-0"	#8 Tot 7	12'-0"	13'-6"	#8 Tot 7	14'-0"
16'-0"	8'-0"	16'-0"	#8 Tot 7	11'-0"	14'-0"	#8 Tot 7	16'-0"

Case 2 - Level ground (±10%) on traffic side of the sound wall and sloping ground on opposite side.

STATE OF CALIFORNIA
DEPARTMENT OF TRANSPORTATION

SOUND WALL MASONRY BLOCK ON PILE CAP DETAILS (3)

NO SCALE

B15-5

2026 STANDARD PLAN B15-5

7-1-26

Return to Table of Contents

Dist	COUNTY	ROUTE	POST MILES TOTAL PROJECT	SHEET No.	TOTAL SHEETS

REGISTERED CIVIL ENGINEER

September 18, 2026

PLANS APPROVAL DATE

REGISTERED PROFESSIONAL ENGINEER Aiman Malak No. C73369 Exp. 12-31-26 CIVIL STATE OF CALIFORNIA

THE STATE OF CALIFORNIA OR ITS OFFICERS OR AGENTS SHALL NOT BE RESPONSIBLE FOR THE ACCURACY OR COMPLETENESS OF SCANNED COPIES OF THIS PLAN SHEET.

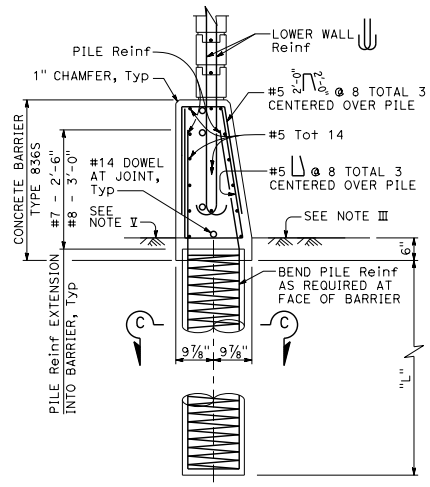

CASE 1

For details not shown, See Case 2.
Level ground ±10% on both sides of barrier.

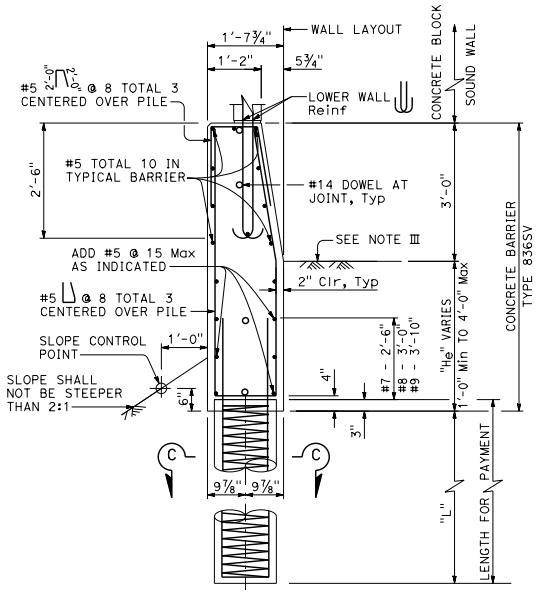

CASE 2

For details not shown, See Case 1.
Level ground ±10% at the traffic side of barrier and sloping ground on the opposite side.

BARRIER SECTIONS

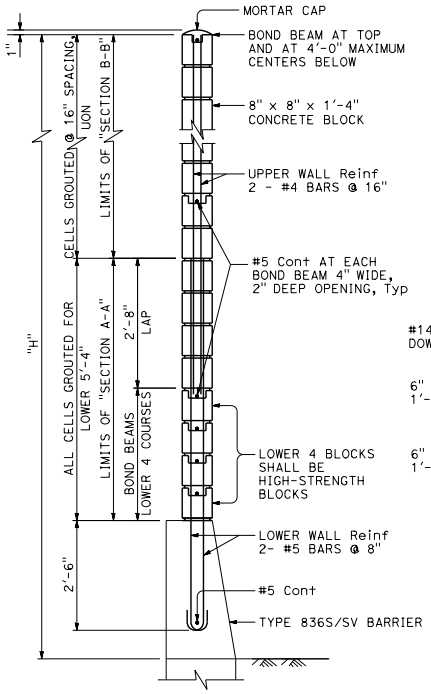

TYPICAL SECTION

See Standard Plan B15-8 for pile details.

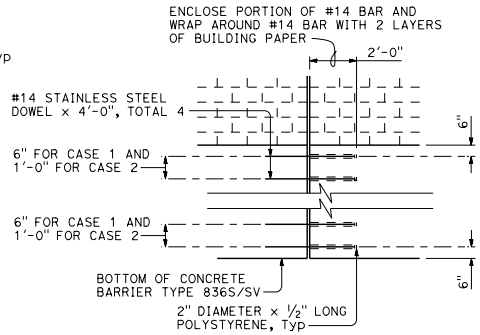

DETAIL A

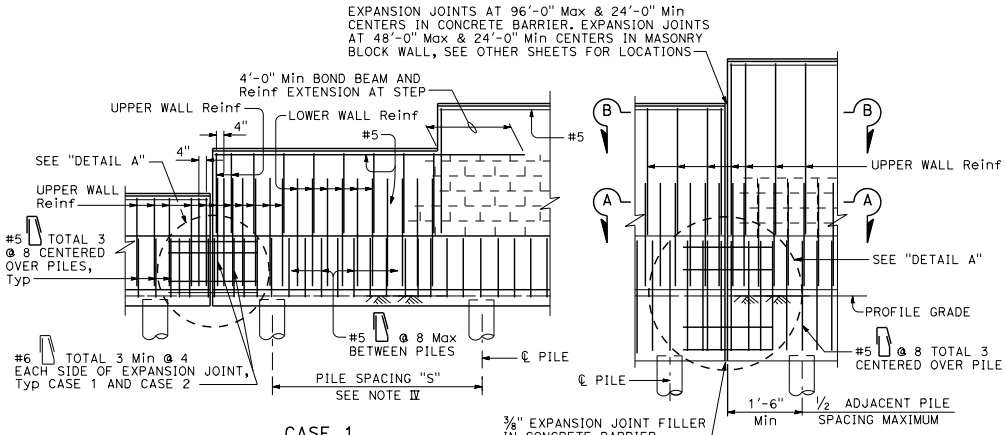

CASE 1

For details not shown, See Case 2.

CASE 2

For details not shown, See Case 1.

PARTIAL ELEVATIONS

NOTES I THROUGH VI:

I. Details shown are primarily to conform design of sound walls to Type 836S and Type 836SV Concrete Barriers.

II. For details and sections not shown, see Standard Plans B15-7 and B15-8.

III. Slope ground at traffic side of barrier to drain. Maximum slope ±10%. See Note 3 on Standard Plan B11-80.

IV. Pile spacing may be varied, but shall not exceed the tabular values. See Standard Plan B15-8.

V. For Case 1 - ground line to be at the same elevation on both sides of the barrier. Barrier shall not be used to retain earth.

VI. See Standard Plan B15-9 for other details.

NOTES A THROUGH G:

A. For type of block, type of block bond, and joint finish, see other sheets.

B. When blocks are laid in stacked bond, ladder type, galvanized joint reinforcement shall be provided. A minimum of 2-9 gauge wires continuous at 4'-0" maximum to be used. Locate reinforcement in joints that are at the approximate midpoint between bond beams.

C. Horizontal joints shall be tooled concave or weathered. Vertical joints shall be tooled concave or raked.

D. For intermediate wall heights (H), or barrier depths (H_e), that are between the values given, use the tabular information for the next higher (H) or (H_e).

E. Refer to Standard Plan B15-7 for masonry strength.

F. For wall heights = 7'-8", the upper wall reinforcement may be omitted.

G. Minimum wall height shall be 7'-8". Maximum wall height shall be 16'-4".

STATE OF CALIFORNIA
DEPARTMENT OF TRANSPORTATION

SOUND WALL MASONRY BLOCK ON TYPE 836S/SV BARRIER DETAILS (1)

NO SCALE

B15-6

2026 STANDARD PLAN B15-6

7-1-26

Return to Table of Contents

Dist	COUNTY	ROUTE	POST MILES TOTAL PROJECT	SHEET No.	TOTAL SHEETS

REGISTERED CIVIL ENGINEER

September 18, 2026
PLANS APPROVAL DATE

REGISTERED PROFESSIONAL ENGINEER
Aiman Malak
No. C73369
Exp. 12-31-26
CIVIL
STATE OF CALIFORNIA

THE STATE OF CALIFORNIA OR ITS OFFICERS OR AGENTS SHALL NOT BE RESPONSIBLE FOR THE ACCURACY OR COMPLETENESS OF SCANNED COPIES OF THIS PLAN SHEET.

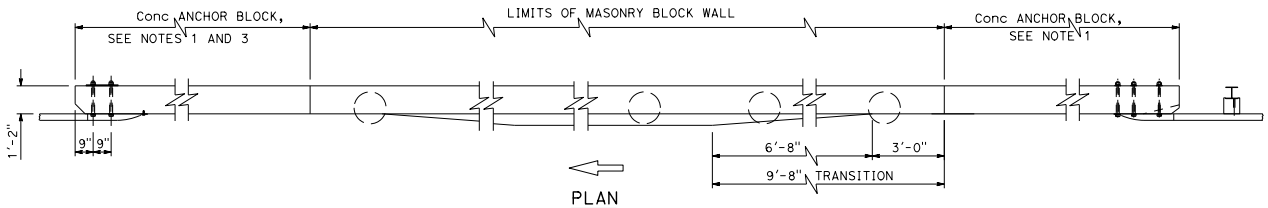

PLAN

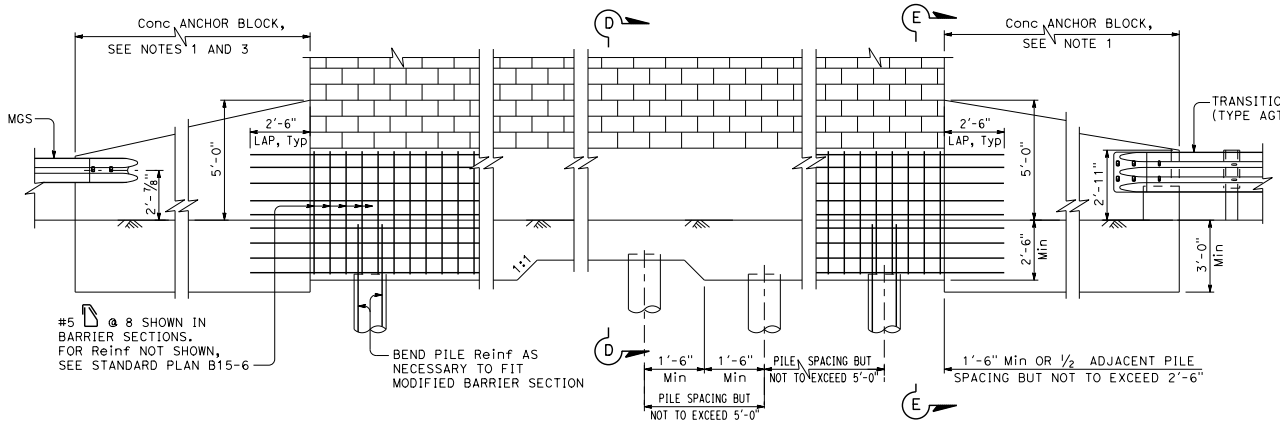

ELEVATION

MIDWEST GUARDRAIL SYSTEM ANCHORAGE

For details not shown, see Standard Plans B11-79, B11-80 and B11-80A.

NOTES:

1. For Concrete Anchor Block and connection details, see Standard Plan A79C1.
2. At this location, pile reinforcement shall be taken from Standard Plan B15-8.
3. If departure end block is within the Clear Recovery Zone (CRZ, 30 feet for expressways and freeways, or 20 feet for conventional highways) of opposing traffic, then use the approach end block at the departure end.

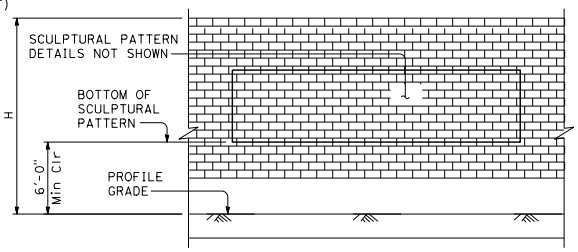

CLEARANCE DETAIL

DESIGN NOTES:

DESIGN:

AASHTO LRFD Bridge Design Specifications, 8th Edition 2017 with California Amendment, Preface date April 2019
TMS 402-16
2019 California Building Code

DESIGN WIND LOAD:

36.5 psf

DESIGN SEISMIC LOAD:

0.57 Dead Load

DESIGN IMPACT LOAD:

TL-3

DESIGN LIVE LOAD SURCHARGE:

240 psf surcharge on level ground surface

REINFORCED CONCRETE AND CONCRETE MASONRY:

f_y = 60 ksi
f'_c = 3.6 ksi
f'_m = 2000 psi *
f'_m = 2500 psi for high-strength blocks only *

* Provide materials to achieve the net compressive strength of concrete masonry unit equal or greater than the specified f'_m.

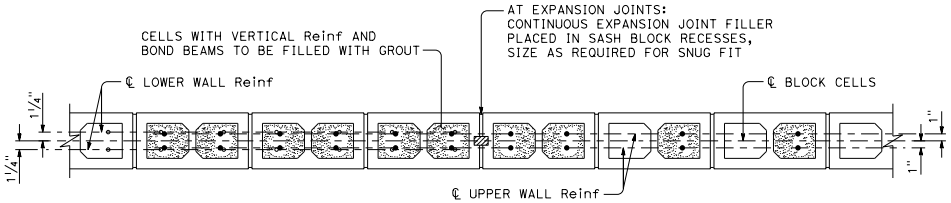

SECTION A-A SECTION B-B

For location of Section A-A and Section B-B, see Standard Plan B15-6.

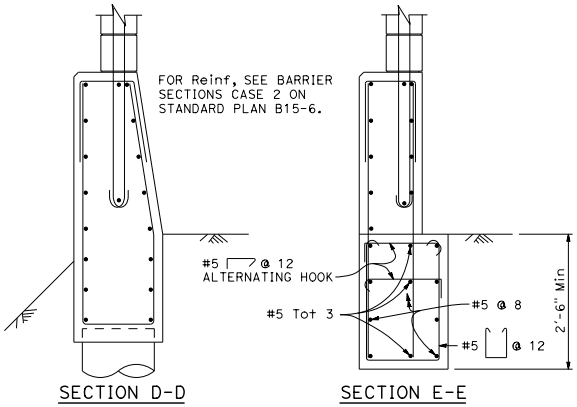

SECTION D-D SECTION E-E

STATE OF CALIFORNIA
DEPARTMENT OF TRANSPORTATION

SOUND WALL MASONRY BLOCK ON TYPE 836S/SV BARRIER DETAILS (2)

NO SCALE

B15-7

2026 STANDARD PLAN B15-7

7-1-26

Return to Table of Contents

Dist	COUNTY	ROUTE	POST MILES TOTAL PROJECT	SHEET No.	TOTAL SHEETS

REGISTERED CIVIL ENGINEER

September 18, 2026

PLANS APPROVAL DATE

REGISTERED PROFESSIONAL ENGINEER Aiman Malak No. C73369 Exp. 12-31-26 CIVIL STATE OF CALIFORNIA

THE STATE OF CALIFORNIA OR ITS OFFICERS OR AGENTS SHALL NOT BE RESPONSIBLE FOR THE ACCURACY OR COMPLETENESS OF SCANNED COPIES OF THIS PLAN SHEET.

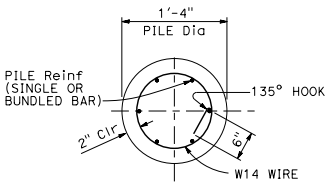

SECTION C-C

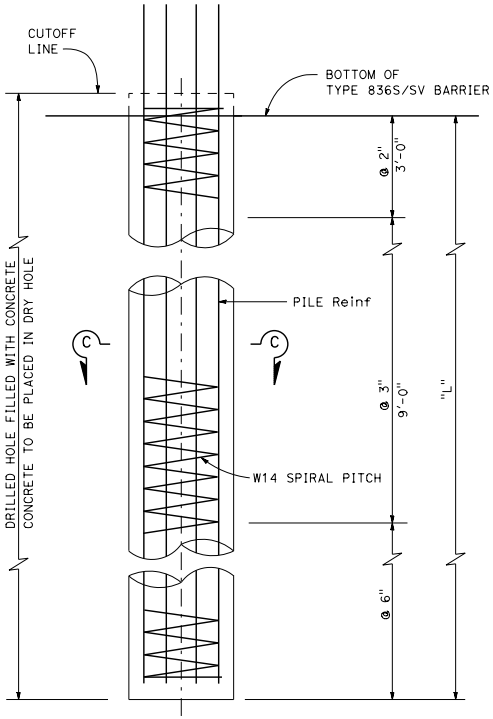

ELEVATION

CASE 1: PILE DATA TABLE									
MAXIMUM H	ø = 25 Min			ø = 30 Min			ø = 35 Min		
	S	L	PILE Reinf	S	L	PILE Reinf	S	L	PILE Reinf
8'-4"	10'-0"	16'-0"	#7 Tot 7	10'-0"	10'-0"	#7 Tot 7	10'-0"	8'-0"	#8 Tot 6
10'-4"	10'-0"	16'-0"	#7 Tot 7	10'-0"	10'-0"	#7 Tot 7	10'-0"	8'-0"	#8 Tot 6
12'-4"	10'-0"	16'-0"	#7 Tot 7	10'-0"	10'-0"	#7 Tot 7	10'-0"	8'-6"	#8 Tot 6
14'-4"	10'-0"	16'-0"	#7 Tot 7	10'-0"	10'-6"	#7 Tot 7	10'-0"	9'-0"	#8 Tot 6
16'-4"	10'-0"	16'-0"	#8 Tot 7	10'-0"	11'-6"	#8 Tot 7	10'-0"	9'-6"	#8 Tot 6

CASE 2: PILE DATA TABLE							
H_e	MAXIMUM H	ø = 30 Min			ø = 35 Min		
		S	L	PILE Reinf	S	L	PILE Reinf
1'-0"	8'-4"	10'-0"	16'-0'	#7 Tot 7	10'-0"	11'-6"	#7 Tot 7
	10'-4"	9'-7"	16'-0"	#7 Tot 7	10'-0"	12'-6"	#7 Tot 7
	12'-4"	8'-4"	16'-0"	#7 Tot 7	10'-0"	13'-0"	#8 Tot 7
	14'-4"	7'-1"	16'-0"	#7 Tot 7	10'-0"	14'-0'	#8 Tot 7
	16'-4"	6'-3"	16'-0"	#7 Tot 7	10'-0"	14'-6"	#8 Tot 7
2'-0"	8'-4"	8'-4"	16'-0"	#7 Tot 7	10'-0"	13'-0"	#7 Tot 7
	10'-4"	7'-6"	16'-0"	#7 Tot 7	10'-0"	13'-6'	#8 Tot 7
	12'-4"	6'-3"	16'-0"	#7 Tot 7	10'-0"	14'-6"	#8 Tot 7
	14'-4"	5'-10"	16'-0"	#7 Tot 7	10'-0"	15'-0"	**#8 Tot 10
	16'-4"	5'-0"	16'-0"	#7 Tot 7	9'-7"	15'-6"	**#8 Tot 10
3'-0"	8'-4"	6'-3"	16'-0"	#7 Tot 7	10'-0"	14'-6"	#8 Tot 7
	10'-4"	5'-5"	16'-0"	#7 Tot 7	10'-0"	15'-0"	**#8 Tot 10
	12'-4"	5'-0"	16'-0"	#7 Tot 7	10'-0"	15'-6"	**#8 Tot 10
	14'-4"	4'-7'	16'-0"	#7 Tot 7	9'-7"	16'-0"	**#8 Tot 10
	16'-4"	4'-2"	16'-0"	#7 Tot 7	8'-4"	16'-0"	**#8 Tot 10
4'-0"	8'-4"	4'-7"	16'-0"	#7 Tot 7	10'-0"	16'-0"	#9 Tot 6
	10'-4"	4'-2"	16'-0"	#7 Tot 7	9'-2"	16'-0"	**#8 Tot 10
	12'-4"	3'-9"	16'-0"	#7 Tot 7	8'-4"	16'-0"	**#8 Tot 10
	14'-4"	3'-4"	16'-3"	#7 Tot 7	7'-11"	16'-0"	**#8 Tot 10
	16'-4"	3'-4"	16'-6"	#7 Tot 7	7'-1"	16'-0"	**#8 Tot 10

** Indicates bundled bars (bundle of two bars)

NOTE:

1. For details not shown, see Standard Plans B15-6 and B15-7.

STATE OF CALIFORNIA
DEPARTMENT OF TRANSPORTATION

SOUND WALL MASONRY BLOCK ON TYPE 836S/SV BARRIER DETAILS (3)

NO SCALE

B15-8

2026 STANDARD PLAN B15-8

7-1-26

Return to Table of Contents

Dist	COUNTY	ROUTE	POST MILES TOTAL PROJECT	SHEET No.	TOTAL SHEETS

REGISTERED CIVIL ENGINEER

September 18, 2026

PLANS APPROVAL DATE

REGISTERED PROFESSIONAL ENGINEER Aiman Malak No. C73369 Exp. 12-31-26 CIVIL STATE OF CALIFORNIA

THE STATE OF CALIFORNIA OR ITS OFFICERS OR AGENTS SHALL NOT BE RESPONSIBLE FOR THE ACCURACY OR COMPLETENESS OF SCANNED COPIES OF THIS PLAN SHEET.

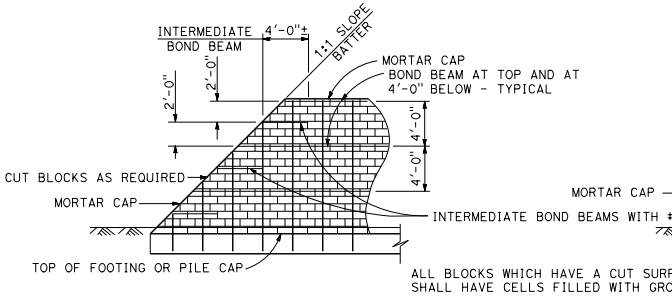

TYPE I

Slope batter shall not be flatter than 1:1.

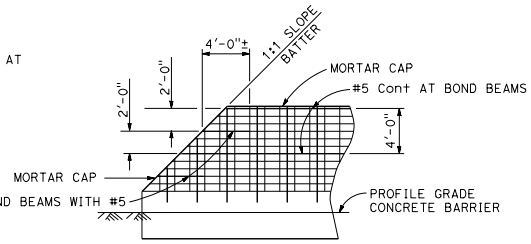

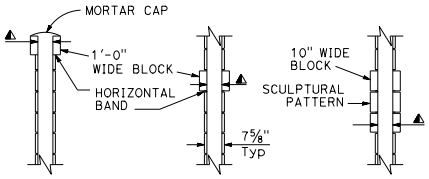

ARCHITECTURAL ALTERNATIVES

▲ Cell width to match 8" block.

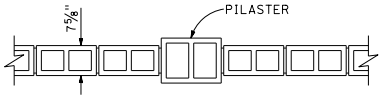

1'-0" WIDE PROJECTING BLOCK

NOTES:

1. 1'-0" wide block not allowed within 6'-0" of profile grade.
2. For structural details, see other sheets.
3. Type Ⅲ not permitted for sound walls with "H" less than 10'-0".
4. The end of the wall details may be used with any of the standard supporting foundations for masonry block. The foundations shown for the different types are for the purpose of illustration only.

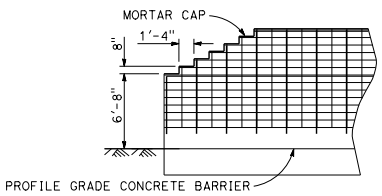

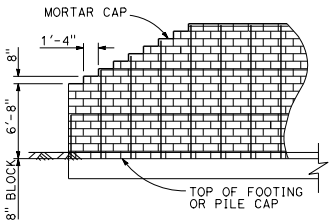

TYPE II

8" x 8" x 16" BLOCK

H	R	S	T
10'-0"	4'-0"	—	—
10'-8"	2'-8"	2'-0"	—
11'-4"	2'-8"	2'-8"	—
12'-0"	3'-4"	2'-8"	—
12'-8"	3'-4"	3'-4"	—
13'-4"	4'-0"	3'-4"	—
14'-0"	4'-0"	4'-0"	—
14'-8"	3'-4"	2'-8"	2'-8"
15'-4"	3'-4"	3'-4"	2'-8"
16'-0"	3'-4"	3'-4"	3'-4"

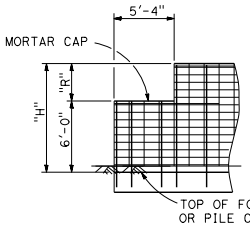

H=10'-0"
SINGLE STEP

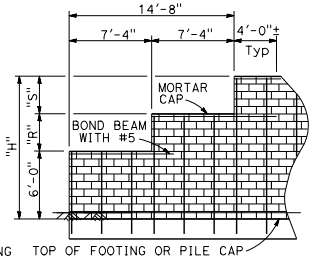

H=10'-8" TO H=14'-0"
2 STEPS

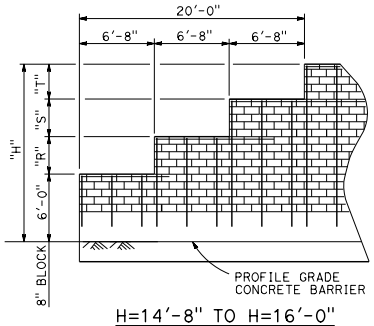

H=14'-8" TO H=16'-0"
3 STEPS

TYPE Ⅲ

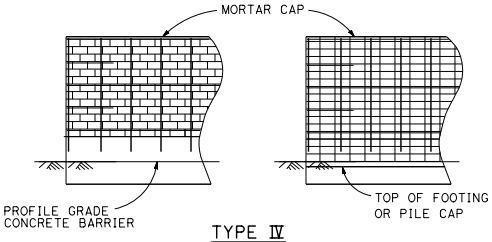

TYPE Ⅳ

END OF WALL DETAILS

STATE OF CALIFORNIA
DEPARTMENT OF TRANSPORTATION

SOUND WALL MASONRY BLOCK MISCELLANEOUS DETAILS

NO SCALE

B15-9

2026 STANDARD PLAN B15-9

7-1-26

Return to Table of Contents

Dist	COUNTY	ROUTE	POST MILES TOTAL PROJECT	SHEET No.	TOTAL SHEETS

REGISTERED CIVIL ENGINEER

September 18, 2026

PLANS APPROVAL DATE

REGISTERED PROFESSIONAL ENGINEER Aiman Malak No. C73369 Exp. 12-31-26 CIVIL STATE OF CALIFORNIA

THE STATE OF CALIFORNIA OR ITS OFFICERS OR AGENTS SHALL NOT BE RESPONSIBLE FOR THE ACCURACY OR COMPLETENESS OF SCANNED COPIES OF THIS PLAN SHEET.

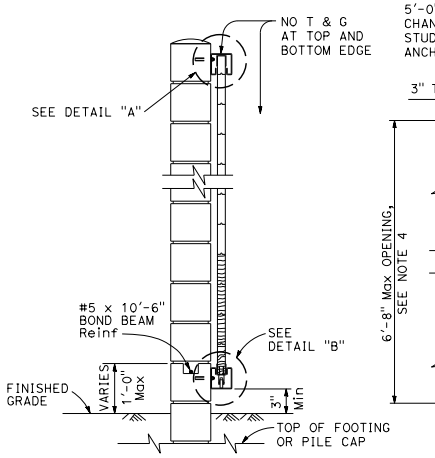

SECTION A-A

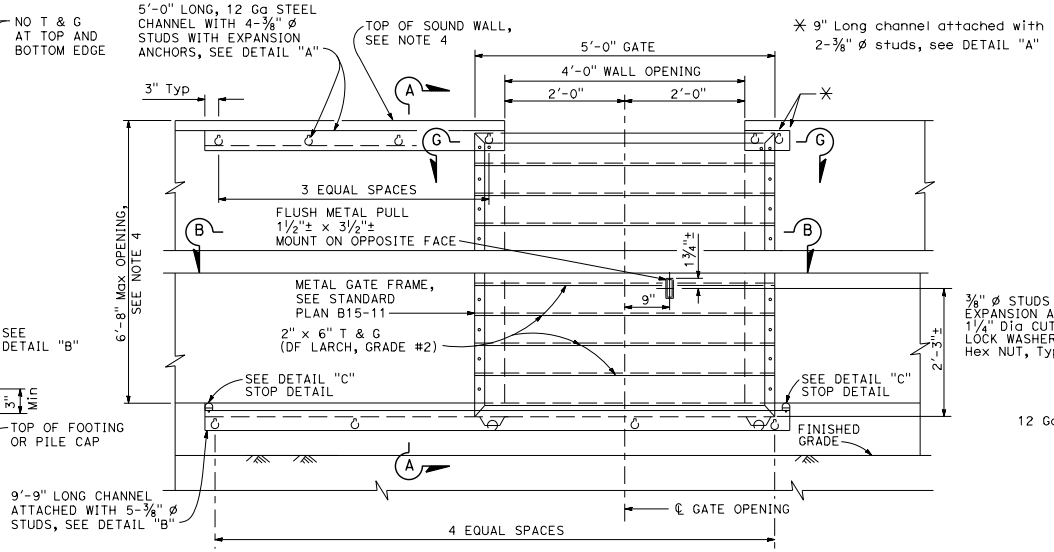

GATE ELEVATION - BACK

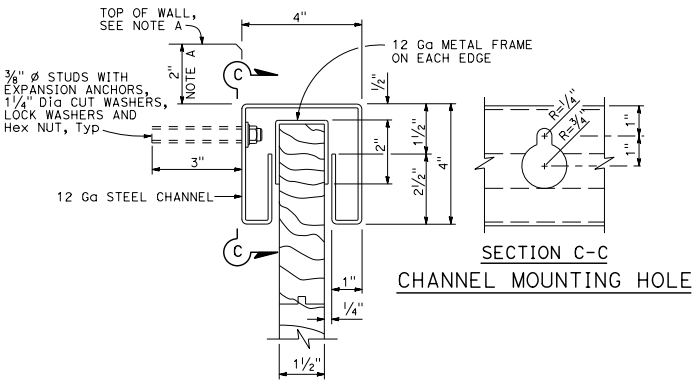

SECTION C-C

CHANNEL MOUNTING HOLE

DETAIL "A"

NOTES:

1. Gate mounted on sloping grade shall be oriented to be in closed position when at lower grade point.
2. Two masonry cells adjacent to each side of gate to be reinforced and grouted.
3. Those blocks upon which the supporting steel channels are mounted shall be smooth faced on the mounting side.
4. When sound wall as measured from the bottom of the gate opening exceeds 6'-8", see Standard Plan B15-11.

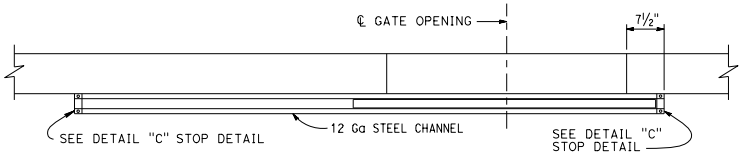

SECTION B-B

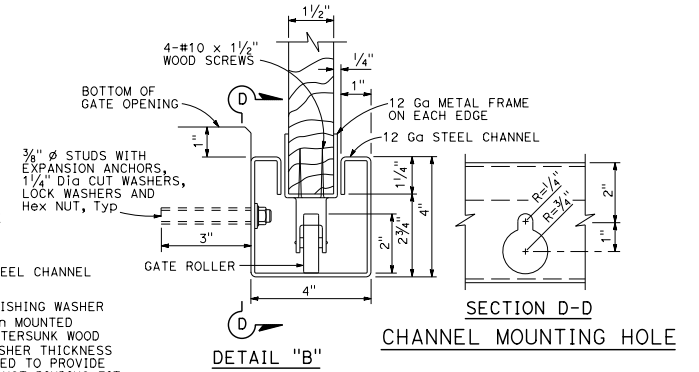

SECTION D-D

CHANNEL MOUNTING HOLE

DETAIL "B"

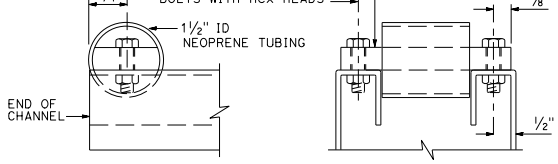

SIDE VIEW

END VIEW

DETAIL "C" STOP DETAIL

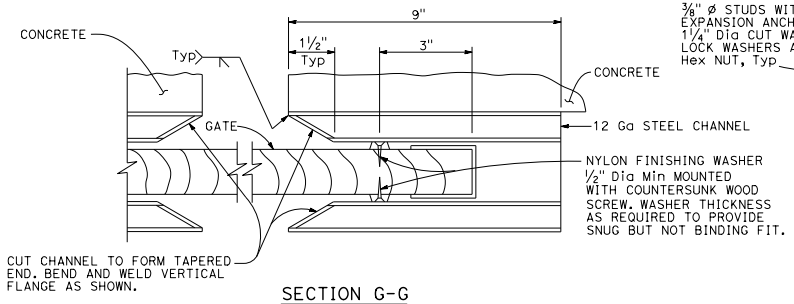

SECTION G-G

For location of nylon finishing washers, see Standard Plan B15-11.

STATE OF CALIFORNIA
DEPARTMENT OF TRANSPORTATION

SOUND WALL MASONRY BLOCK ON FOOTING OR PILE CAP 5'-0" ACCESS GATE DETAILS (1)

NO SCALE

B15-10

2026 STANDARD PLAN B15-10

7-1-26

Return to Table of Contents

Dist	COUNTY	ROUTE	POST MILES TOTAL PROJECT	SHEET No.	TOTAL SHEETS

REGISTERED CIVIL ENGINEER

September 18, 2026

PLANS APPROVAL DATE

REGISTERED PROFESSIONAL ENGINEER Aiman Malak No. C73369 Exp. 12-31-26 CIVIL STATE OF CALIFORNIA

THE STATE OF CALIFORNIA OR ITS OFFICERS OR AGENTS SHALL NOT BE RESPONSIBLE FOR THE ACCURACY OR COMPLETENESS OF SCANNED COPIES OF THIS PLAN SHEET.

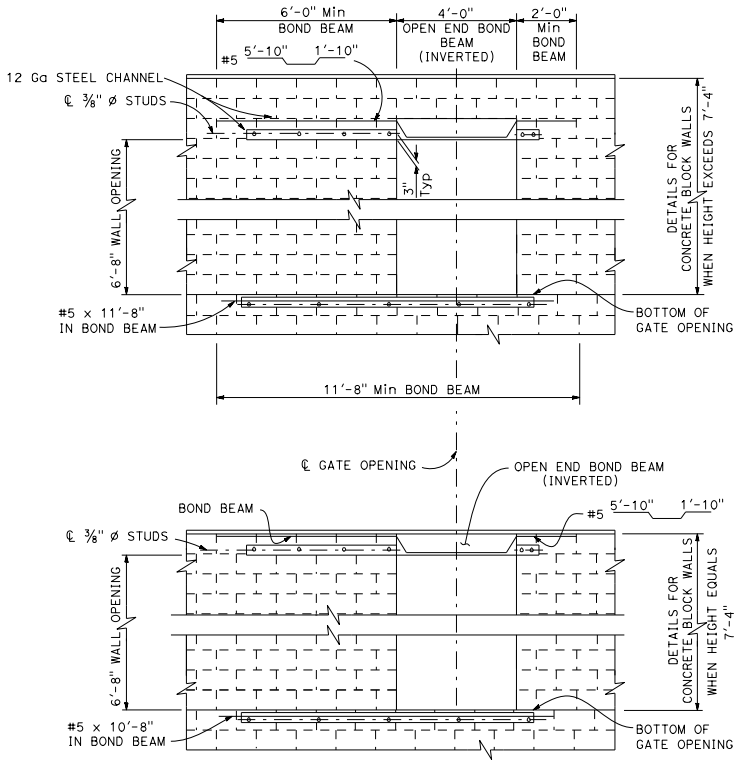

PARTIAL ELEVATION (BACK)

For details not shown, see above.

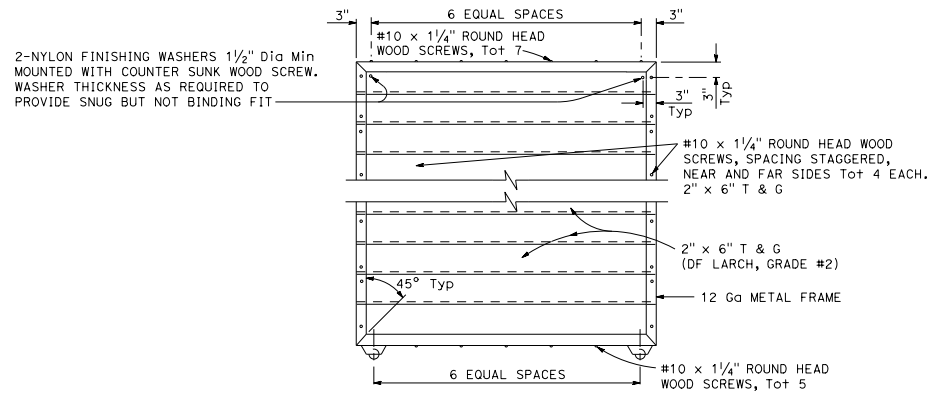

ELEVATION - METAL FRAME

STATE OF CALIFORNIA
DEPARTMENT OF TRANSPORTATION

SOUND WALL MASONRY BLOCK ON FOOTING OR PILE CAP 5'-0" ACCESS GATE DETAILS (2)

NO SCALE

B15-11

2026 STANDARD PLAN B15-11

7-1-26

Return to Table of Contents

Dist	COUNTY	ROUTE	POST MILES TOTAL PROJECT	SHEET No.	TOTAL SHEETS

REGISTERED CIVIL ENGINEER

September 18, 2026

PLANS APPROVAL DATE

REGISTERED PROFESSIONAL ENGINEER Aiman Malak No. C73369 Exp. 12-31-26 CIVIL STATE OF CALIFORNIA

THE STATE OF CALIFORNIA OR ITS OFFICERS OR AGENTS SHALL NOT BE RESPONSIBLE FOR THE ACCURACY OR COMPLETENESS OF SCANNED COPIES OF THIS PLAN SHEET.

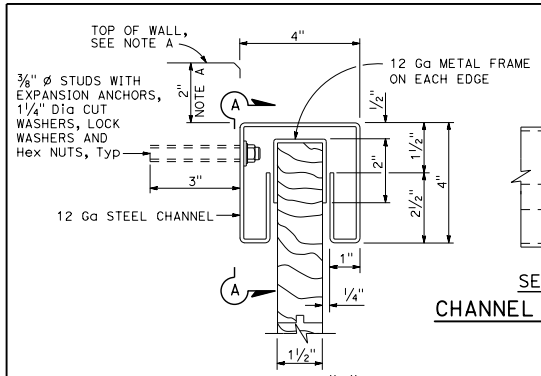

DETAIL "A"

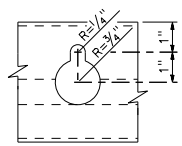

SECTION A-A

CHANNEL MOUNTING HOLE

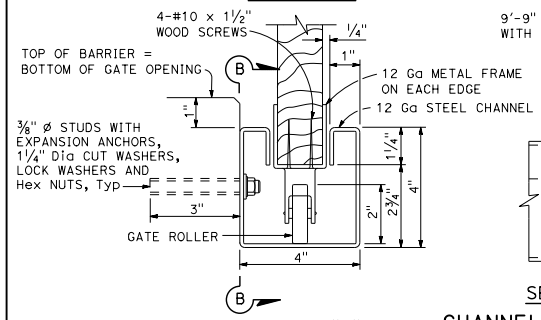

DETAIL "B"

9'-9" LONG CHANNEL ATTACHED WITH 5-3/8" Ø STUDS, SEE DETAIL "B"

NOTE:
Those blocks upon which the supporting steel channels are mounted shall be smooth faced on the mounted side.

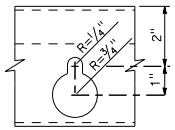

SECTION B-B

CHANNEL MOUNTING HOLE

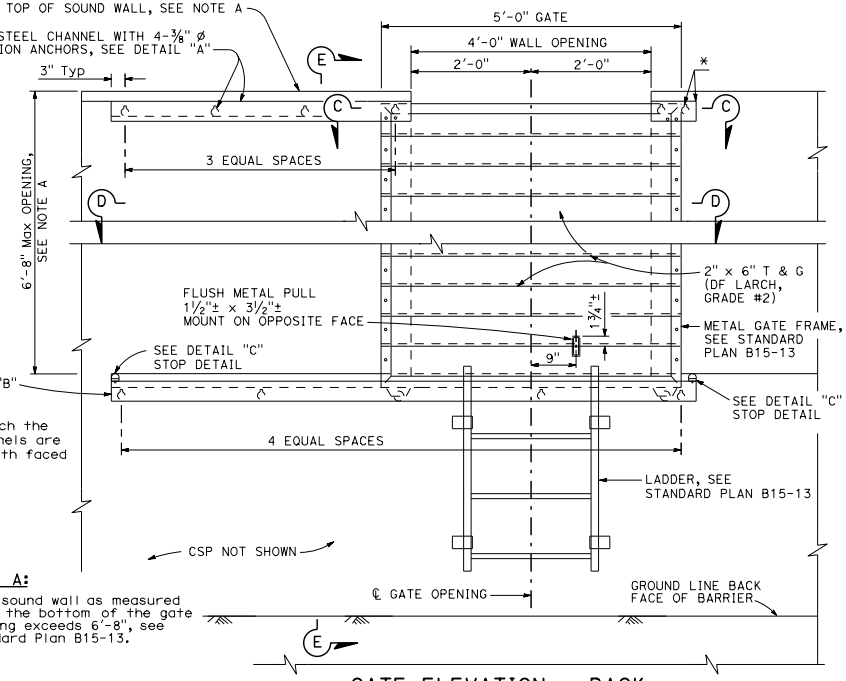

NOTE A:
When sound wall as measured from the bottom of the gate opening exceeds 6'-8", see Standard Plan B15-13.

GATE ELEVATION - BACK

* 9" long channel attached with 2-3/8" Ø studs, see DETAIL "A".

NOTE:
1. Gate mounted on sloping grade shall be oriented to be in closed position when at lower grade point.

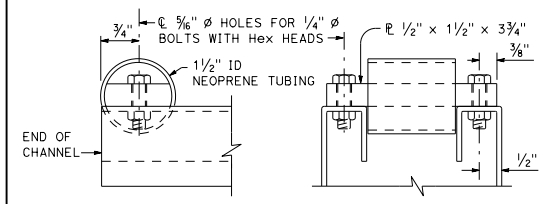

SIDE VIEW

END VIEW

DETAIL "C" STOP DETAIL

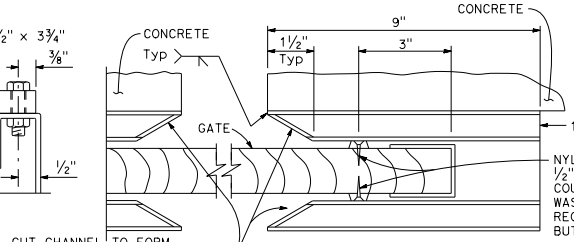

SECTION C-C

NOTE:
For location of nylon finishing washers, see Standard Plan B15-13.

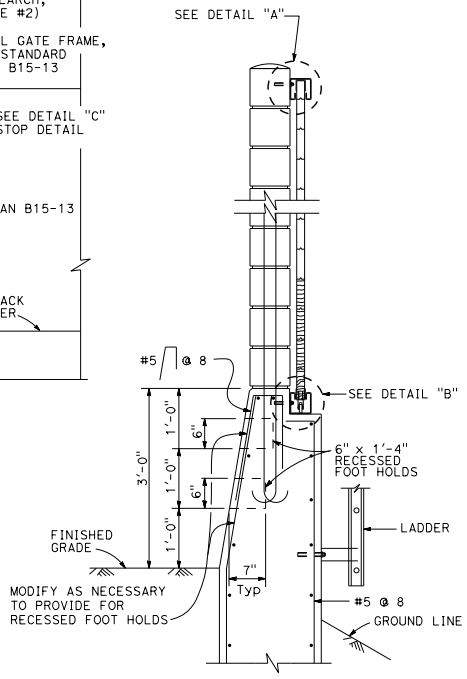

SECTION E-E

NOTE:
Two masonry cells adjacent to each side of the gate to be reinforced and grouted.

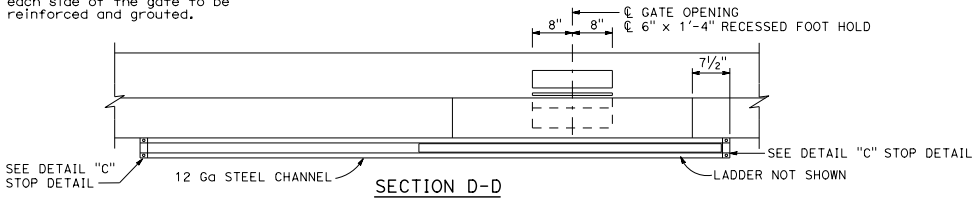

SECTION D-D

STATE OF CALIFORNIA
DEPARTMENT OF TRANSPORTATION

SOUND WALL MASONRY BLOCK ON BARRIER 5'-0" ACCESS GATE DETAILS (1)

NO SCALE

B15-12

7-1-26

Return to Table of Contents

Dist	COUNTY	ROUTE	POST MILES TOTAL PROJECT	SHEET No.	TOTAL SHEETS

REGISTERED CIVIL ENGINEER

September 18, 2026

PLANS APPROVAL DATE

REGISTERED PROFESSIONAL ENGINEER Aiman Malak No. C73369 Exp. 12-31-26 CIVIL STATE OF CALIFORNIA

THE STATE OF CALIFORNIA OR ITS OFFICERS OR AGENTS SHALL NOT BE RESPONSIBLE FOR THE ACCURACY OR COMPLETENESS OF SCANNED COPIES OF THIS PLAN SHEET.

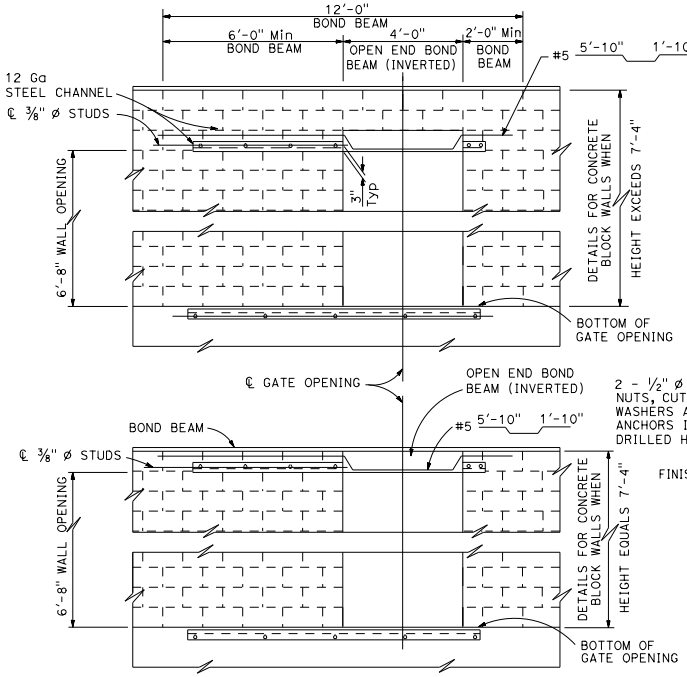

PART ELEVATION (BACK)

For details not shown, see above.

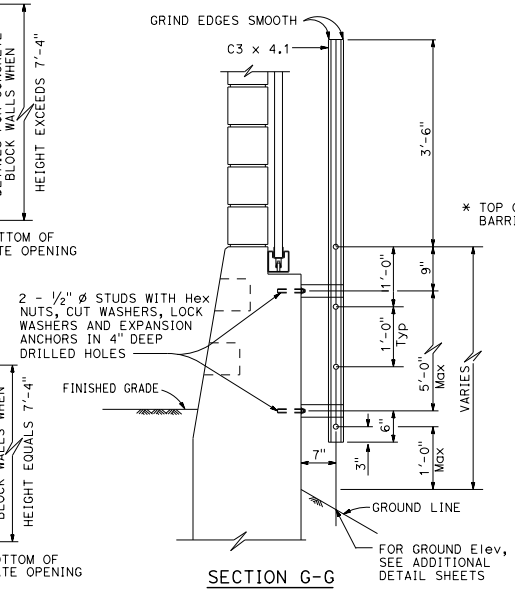

SECTION G-G

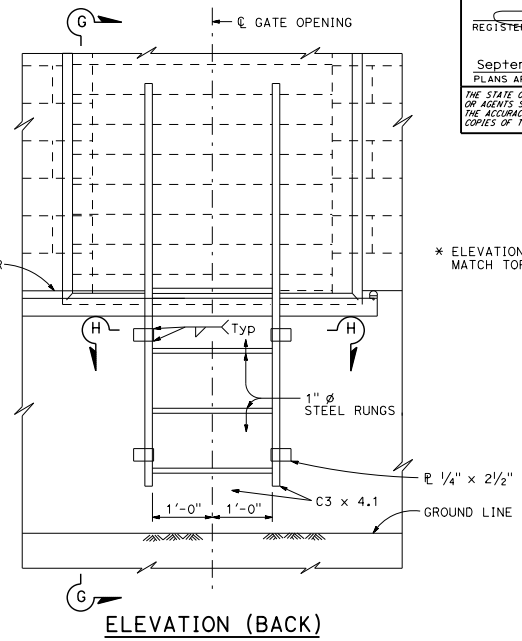

* ELEVATION OF CENTERLINE OF TOP RUNG TO MATCH TOP OF CONCRETE BARRIER ELEVATION.

ELEVATION (BACK)

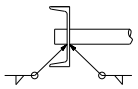

DETAIL "A"

NOTE:

CSP landing required when slope of ground behind barrier is steeper than 8:1. See additional detail sheets for location where required.

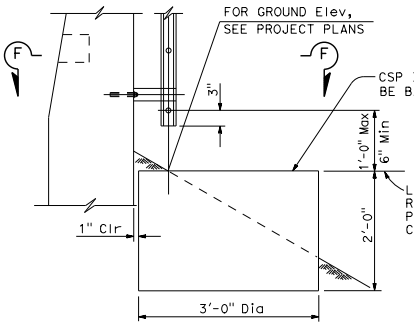

CORRUGATED STEEL PIPE LANDING DETAILS

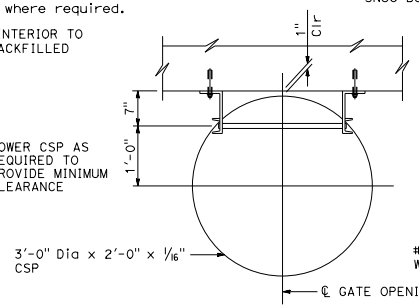

SECTION F-F

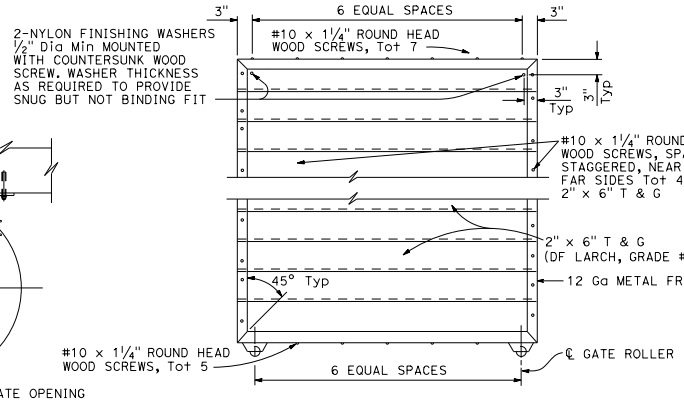

ELEVATION - METAL FRAME

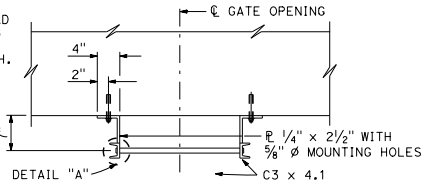

SECTION H-H

STATE OF CALIFORNIA
DEPARTMENT OF TRANSPORTATION

SOUND WALL MASONRY BLOCK ON BARRIER 5'-0" ACCESS GATE DETAILS (2)

NO SCALE

B15-13

2026 STANDARD PLAN B15-13

7-1-26

Return to Table of Contents

Dist	COUNTY	ROUTE	POST MILES TOTAL PROJECT	SHEET No.	TOTAL SHEETS

REGISTERED CIVIL ENGINEER

September 18, 2026

PLANS APPROVAL DATE

REGISTERED PROFESSIONAL ENGINEER Aiman Malak No. C73369 Exp. 12-31-26 CIVIL STATE OF CALIFORNIA

THE STATE OF CALIFORNIA OR ITS OFFICERS OR AGENTS SHALL NOT BE RESPONSIBLE FOR THE ACCURACY OR COMPLETENESS OF SCANNED COPIES OF THIS PLAN SHEET.

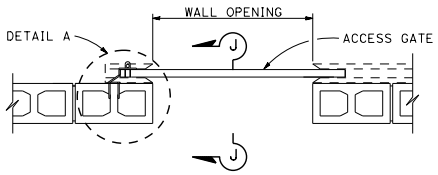

PLAN
LOCK ON
GATE SIDE OF WALL

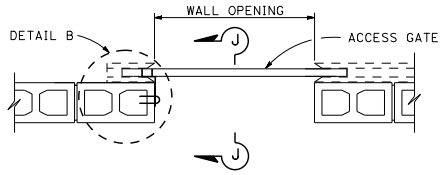

PLAN
LOCK ON
INSIDE OF WALL OPENING

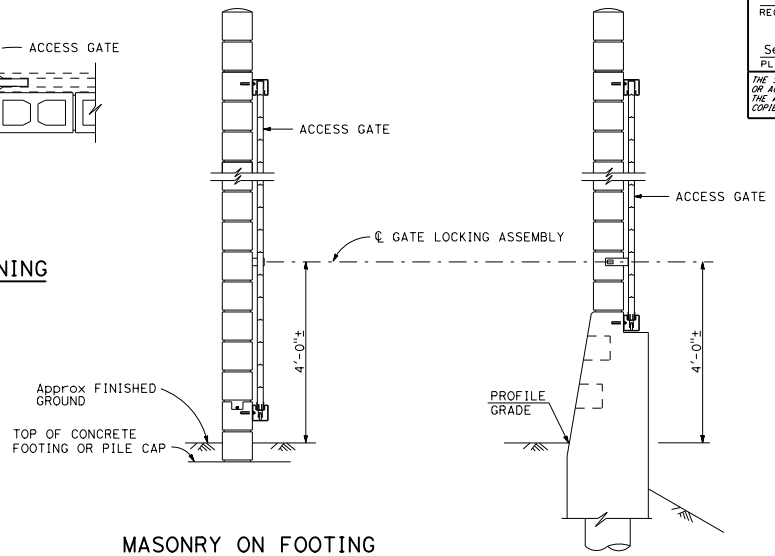

MASONRY ON FOOTING OR PILE CAP

MASONRY ON BARRIER

SECTION J-J

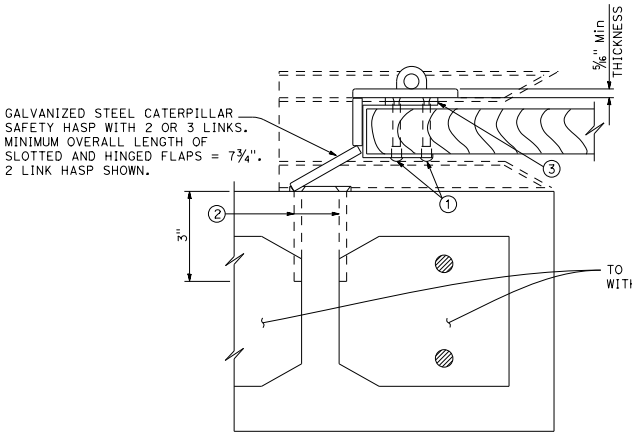

DETAIL A

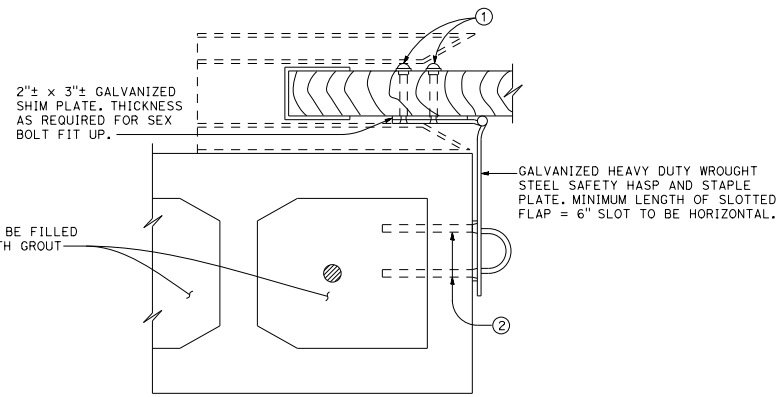

DETAIL B

NOTES:

1. Masonry anchors to be installed after the grout in the block cells has attained specified strength.
2. The Contractor may submit alternative gate locking assemblies for approval by the Engineer.
3. See other sheets for gate details.

① 4 - SEX BOLTS WITH ¼" - 20 FLAT HEAD CORROSION RESISTANT MACHINE SCREWS.

② 4 - ¼" ø x 3" LONG FLAT HEAD SLEEVE TYPE CORROSION RESISTANT MASONRY ANCHORS.

③ GALVANIZED SHIM PLATE. SIZE AS REQUIRED TO MATCH HASP STAPLE PLATE. THICKNESS AS REQUIRED FOR SEX BOLT FIT UP.

STATE OF CALIFORNIA
DEPARTMENT OF TRANSPORTATION

SOUND WALL MASONRY BLOCK ACCESS GATE LOCKING DETAILS

NO SCALE

B15-14

2026 STANDARD PLAN B15-14

7-1-26

Return to Table of Contents

Dist	COUNTY	ROUTE	POST MILES TOTAL PROJECT	SHEET No.	TOTAL SHEETS

REGISTERED CIVIL ENGINEER

September 18, 2026
PLANS APPROVAL DATE

REGISTERED PROFESSIONAL ENGINEER Aiman Malak No. C73369 Exp. 12-31-26 CIVIL STATE OF CALIFORNIA

THE STATE OF CALIFORNIA OR ITS OFFICERS OR AGENTS SHALL NOT BE RESPONSIBLE FOR THE ACCURACY OR COMPLETENESS OF SCANNED COPIES OF THIS PLAN SHEET.

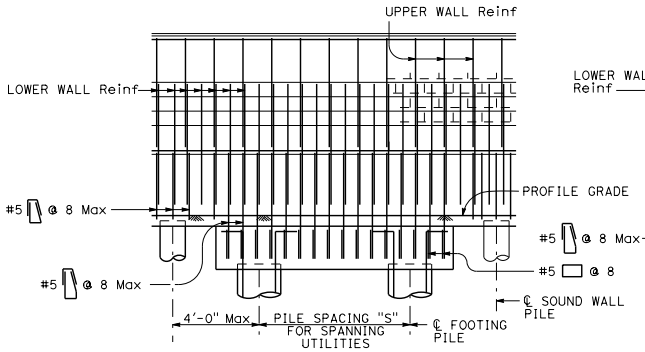

CASE 1

For details not shown, see Case 2.
See Note 1

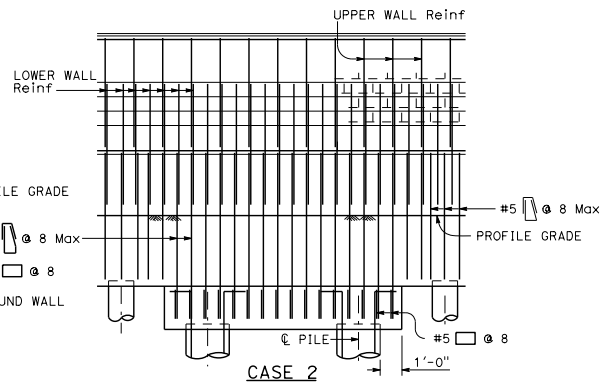

CASE 2

For details not shown, see Case 1.
See Note 1

PART ELEVATIONS

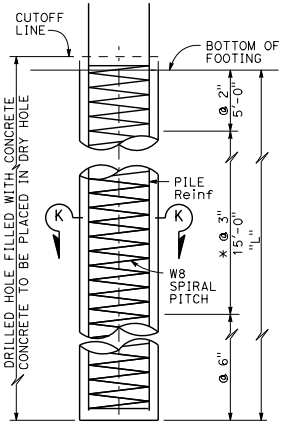

ELEVATION

* @ 2" at option of Contractor.

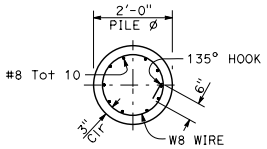

SECTION K-K

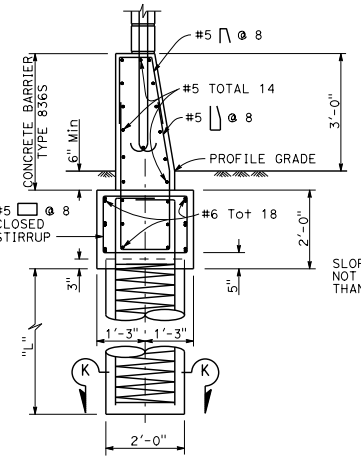

CASE 1

Level ground ±10% on both sides of barrier.
For details not shown, see Case 2.

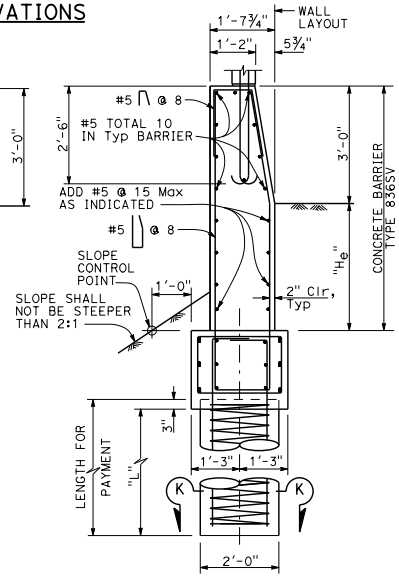

CASE 2

Level ground ±10% at the traffic side of barrier and sloping ground on the opposite side.
For details not shown, see Case 1.

BARRIER SECTIONS

DESIGN NOTES:

DESIGN

AASHTO LRFD Bridge Design Specifications,
8th Edition 2017 with California Amendment,
Preface date April 2019
TMS 402-16
2019 California Building Code

DESIGN WIND LOAD	DESIGN SEISMIC LOAD	DESIGN IMPACT LOAD
36.5 psf	0.57 Dead load	TL-3

DESIGN LIVE LOAD SURCHARGE

240 psf surcharge on level ground surface

REINFORCED CONCRETE AND CONCRETE MASONRY

f'_c = 3.6 ksi
f_y = 60 ksi
f'_m = 2000 psi *
f'_m = 2500 psi for high-strength blocks only *

* Provide materials to achieve the net compressive strength of concrete masonry unit equal or greater than the specified f'_m.

CASE 1 : PILE DATA TABLE

MAXIMUM H	Ø = 25 S	Ø = 25 L	Ø = 30 S	Ø = 30 L	Ø = 35 S	Ø = 35 L	MAXIMUM H
8'-4"	16'-0"	13'-6"	16'-0"	10'-0"	16'-0"	8'-0"	8'-4"
10'-4"	16'-0"	14'-0"	16'-0"	10'-6"	16'-0"	8'-6"	10'-4"
12'-4"	16'-0"	14'-6"	16'-0"	11'-0"	16'-0"	8'-6"	12'-4"
14'-4"	16'-0"	15'-0"	16'-0"	11'-6"	16'-0"	9'-0"	14'-4"
16'-4"	16'-0"	15'-6"	16'-0"	12'-0"	16'-0"	9'-6"	16'-4"

CASE 2 : PILE DATA TABLE

H_e	H	Ø = 30 Min S	Ø = 30 Min L	Ø = 35 Min S	Ø = 35 Min L	H
1'-0"	8'-4"	16'-0"	18'-0"	16'-0"	13'-6"	8'-4"
	10'-4"	16'-0"	19'-0"	16'-0"	14'-6"	10'-4"
	12'-4"	16'-0"	19'-6"	16'-0"	15'-6"	12'-4"
	14'-4"	16'-0"	20'-6"	16'-0"	16'-6"	14'-4"
	16'-4"	16'-0"	21'-6"	16'-0"	17'-6"	16'-4"
2'-0"	8'-4"	16'-0"	20'-0"	16'-0"	15'-0"	8'-4"
	10'-4"	16'-0"	20'-6"	16'-0"	16'-0"	10'-4"
	12'-4"	16'-0"	21'-6"	16'-0"	17'-0"	12'-4"
	14'-4"	16'-0"	22'-6"	16'-0"	18'-0"	14'-4"
	16'-4"	14'-6"	22'-6"	16'-0"	18'-6"	16'-4"
3'-0"	8'-4"	16'-0"	22'-0"	16'-0"	16'-6"	8'-4"
	10'-4"	15'-6"	22'-6"	16'-0"	17'-6"	10'-4"
	12'-4"	14'-0"	22'-6"	16'-0"	18'-6"	12'-4"
	14'-4"	13'-0"	22'-6"	15'-6"	19'-0"	14'-4"
	16'-4"	12'-0"	22'-6"	14'-0"	19'-0"	16'-4"
4'-0"	8'-4"	12'-3"	22'-6"	15'-3"	18'-0"	8'-4"
	10'-4"	11'-6"	22'-6"	14'-3"	18'-6"	10'-4"
	12'-4"	10'-9"	22'-6"	13'-3"	18'-6"	12'-4"
	14'-4"	10'-0"	22'-6"	12'-3"	18'-6"	14'-4"
	16'-4"	9'-6"	22'-6"	11'-3"	19'-0"	16'-4"

NOTE:

1. For wall reinforcement details, see Standard Plan B15-6.

STATE OF CALIFORNIA
DEPARTMENT OF TRANSPORTATION

SOUND WALL MASONRY BLOCK ON TYPE 836S/SV BARRIER ON PILE FOOTING FOR SPANNING UTILITIES

NO SCALE

B15-15

2026 STANDARD PLAN B15-15

7-1-26

Return to Table of Contents

Dist	COUNTY	ROUTE	POST MILES TOTAL PROJECT	SHEET No.	TOTAL SHEETS

Mario Lozano
REGISTERED CIVIL ENGINEER

September 18, 2026
PLANS APPROVAL DATE

REGISTERED PROFESSIONAL ENGINEER
Mario Lozano-Cisneros
No. C94626
Exp. 3-31-27
CIVIL
STATE OF CALIFORNIA

THE STATE OF CALIFORNIA OR ITS OFFICERS OR AGENTS SHALL NOT BE RESPONSIBLE FOR THE ACCURACY OR COMPLETENESS OF SCANNED COPIES OF THIS PLAN SHEET.

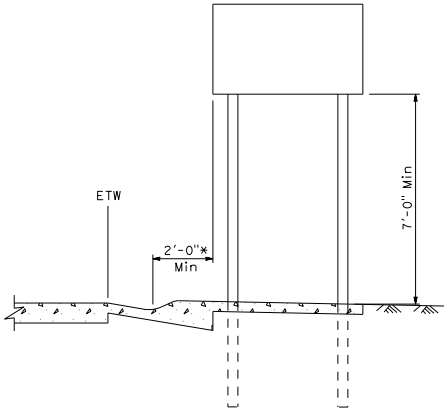

URBAN LOCATIONS

* 1'-0" Min where lateral clearance limited

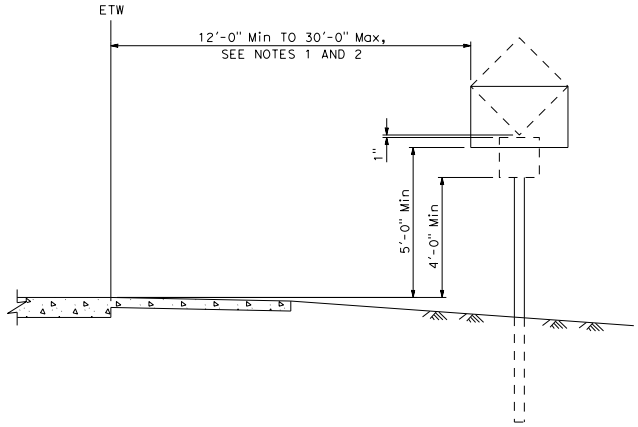

RURAL LOCATIONS

CONVENTIONAL HIGHWAYS AND INTERCHANGE AREAS

NOTES:

1. When clear roadside recovery areas are provided, signs shall be placed as far from the edge of traveled way as possible, up to a maximum of 30'-0". When possible, they shall be placed in protected locations.
2. Signs in medians shall be placed at midpoint of median up to a maximum distance of 30'-0" from edge of traveled way. When appropriate, signs for opposing directions shall be placed back to back.
3. Does not apply at locations where minimum horizontal distance is not reasonable due to terrain characteristics, steep slopes, roadway features, or when signs are installed on structures or signal or lighting standards.

ABBREVIATION:

EPS - Edge of Paved Shoulder

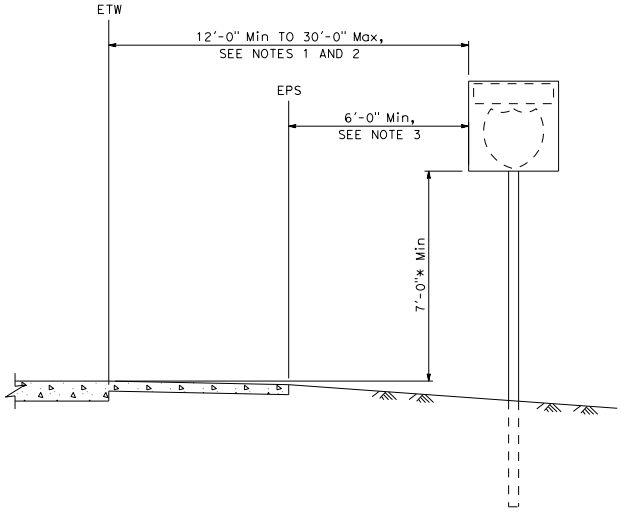

REGULATORY AND WARNING SIGNS AND ROUTE SHIELDS

* 5'-0" Min at 30'-0" from ETW

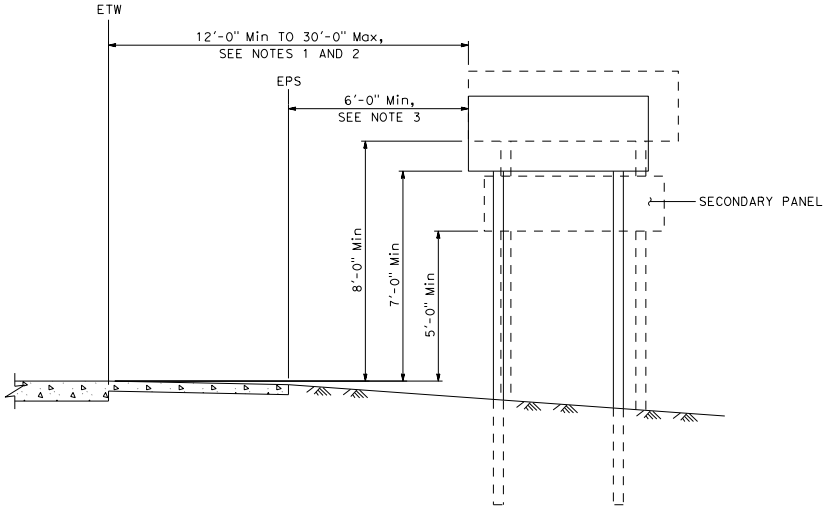

GUIDE SIGNS

FREEWAY AND EXPRESSWAY LOCATIONS

STATE OF CALIFORNIA
DEPARTMENT OF TRANSPORTATION

ROADSIDE SIGNS
TYPICAL INSTALLATION DETAILS

NO SCALE

RS1

2026 STANDARD PLAN RS1

7-1-26

Return to Table of Contents

Dist	COUNTY	ROUTE	POST MILES TOTAL PROJECT	SHEET No.	TOTAL SHEETS

REGISTERED CIVIL ENGINEER

September 18, 2026

PLANS APPROVAL DATE

REGISTERED PROFESSIONAL ENGINEER — Mahesh Shrestha — No. C80133 — Exp. 9-30-26 — CIVIL — STATE OF CALIFORNIA

THE STATE OF CALIFORNIA OR ITS OFFICERS OR AGENTS SHALL NOT BE RESPONSIBLE FOR THE ACCURACY OR COMPLETENESS OF SCANNED COPIES OF THIS PLAN SHEET.

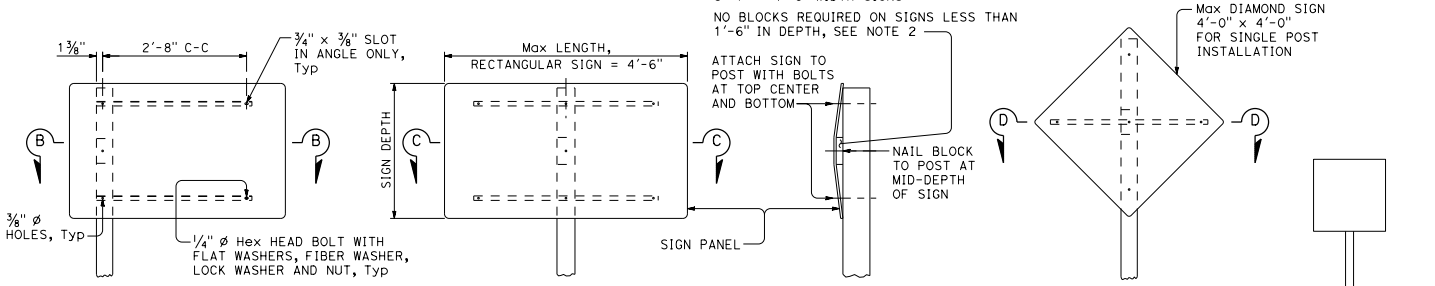

UNBALANCED — BALANCED — SIDE VIEW — BALANCED

SINGLE POST INSTALLATION

See Note 5 regarding breakaway feature for single post installations.

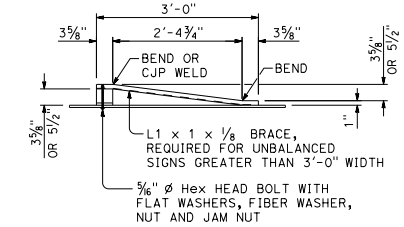

SECTION B-B

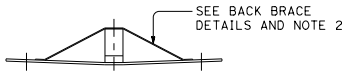

SECTION C-C

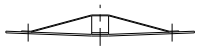

SECTION D-D

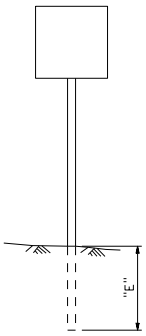

POST EMBEDMENT

POST SPACING TABLE		
SIGN PANEL LENGTH	SIGN PANEL OVERHANG	POST SPACING
"A"	"B"	"C"
4'-6"	6"	3'-6"
4'-8" TO 5'-6"	7" TO 1'-0"	3'-6"
6'-0" & 6'-6"	1'-0" & 1'-3"	4'-0"
7'-0" & 7'-6"	1'-3" & 1'-6"	4'-6"
8'-0"	1'-6"	5'-0"
8'-6"	1'-8"	5'-2"
9'-0"	1'-10"	5'-4"
9'-6"	1'-11"	5'-8"
10'-0"	2'-0"	6'-0"
10'-6"	2'-0"	6'-6"
11'-0",11'-6",12'-0"	2'-0", 2'-3", 2'-6"	7'-0"
12'-6"	2'-6"	7'-6"
13'-0"	2'-6"	8'-0"
13'-6", 14'-6"	2'-6", 3'-0"	8'-6"
14'-0", 15'-0"	2'-6", 3'-0"	9'-0"
15'-6", 16'-0"	3'-0", 3'-3"	9'-6"
16'-6"	3'-3"	10'-0"
17'-0", 17'-6"	3'-3", 3'-6"	10'-6"
18'-0", 18'-6"	3'-6", 3'-9"	11'-0"
19'-0"	3'-9"	11'-6"
19'-6", 20'-0"	3'-9", 4'-0"	12'-0"
20'-6", 21'-0"	4'-0", 4'-3"	12'-6"
21'-6"	4'-3"	13'-0"
22'-0", 22'-6"	4'-3", 4'-6"	13'-6"
23'-0"	4'-6"	14'-0"
23'-6", 24'-0"	4'-6", 4'-9"	14'-6"

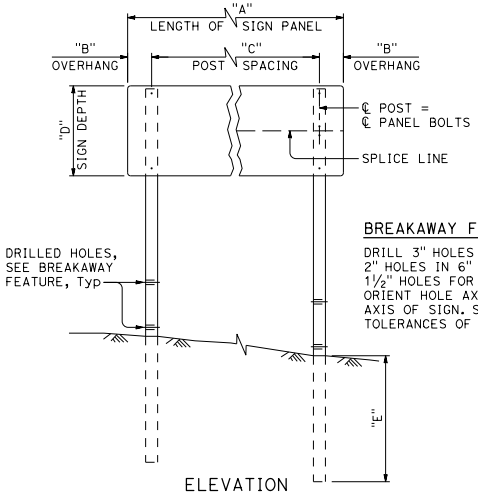

ELEVATION

See Note 7

BREAKAWAY FEATURE:

DRILL 3" HOLES IN 6" x 8" POST, 2" HOLES IN 6" x 6" POST, AND 1 1/2" HOLES FOR 4" x 6" POSTS. ORIENT HOLE AXIS PARALLEL TO AXIS OF SIGN. SEE NOTE 6 FOR TOLERANCES OF DRILLED HOLES

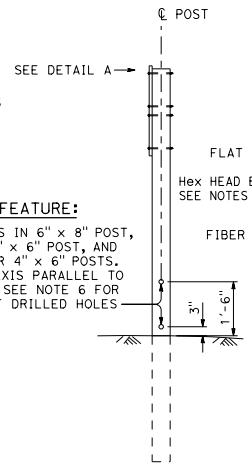

SIDE VIEW

TWO POST INSTALLATION

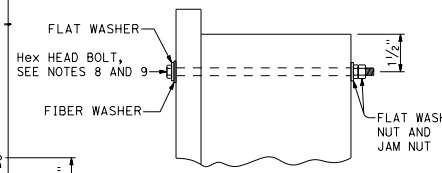

DETAIL A

POST EMBEDMENT	
POST SIZE	"E"
4" x 4"	3'-6"
4" x 6"	4'-6"
6" x 6"	5'-0"
6" x 8"	6'-0"

NOTES:

1. Place long dimension of post cross section normal to sign axis, see Section C-C.
2. Balanced single post installations of unframed single sheet aluminum panel signs shall have block spacers if 1'-6" or more in depth and a combination of block spacers and back braces if 1'-6" or more in depth and 2'-10" or more in width. Sign panels less than 1'-6" in depth and 2'-10" or more in width shall have back braces only.
3. For post size see sign layout, format or quantity sheets.
4. Balanced single post installations of Laminated Panel and Framed single sheet panel signs require back braces when 2'-10" or more in length.
5. Breakaway feature for single post installation shall be the same as the breakaway feature shown for the two post installation.
6. Tolerance for diameter of drilled holes in breakaway feature is ±1/8".
7. Bolt hole layout is dependent on type of panel. Drill holes in post to match panel.
8. 5/16" ø for single sheet aluminum panel signs.
9. 3/8" ø for laminated panel signs or framed single sheet aluminum panel signs.

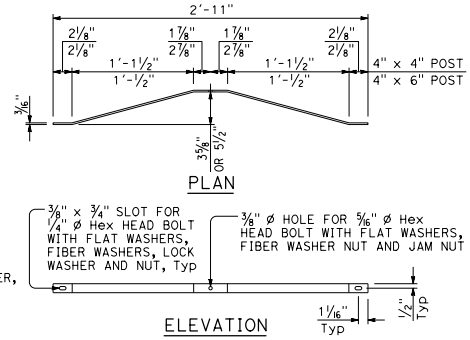

PLAN

ELEVATION

BACK BRACE DETAILS

See Note 2

STATE OF CALIFORNIA
DEPARTMENT OF TRANSPORTATION

ROADSIDE SIGNS
WOOD POST
TYPICAL INSTALLATION DETAILS

NO SCALE

RS2

2026 STANDARD PLAN RS2

7-1-26

Return to Table of Contents

Dist	COUNTY	ROUTE	POST MILES TOTAL PROJECT	SHEET No.	TOTAL SHEETS

REGISTERED CIVIL ENGINEER

September 18, 2026

PLANS APPROVAL DATE

REGISTERED PROFESSIONAL ENGINEER Mahesh Shrestha No. C80133 Exp. 9-30-26 CIVIL STATE OF CALIFORNIA

THE STATE OF CALIFORNIA OR ITS OFFICERS OR AGENTS SHALL NOT BE RESPONSIBLE FOR THE ACCURACY OR COMPLETENESS OF SCANNED COPIES OF THIS PLAN SHEET.

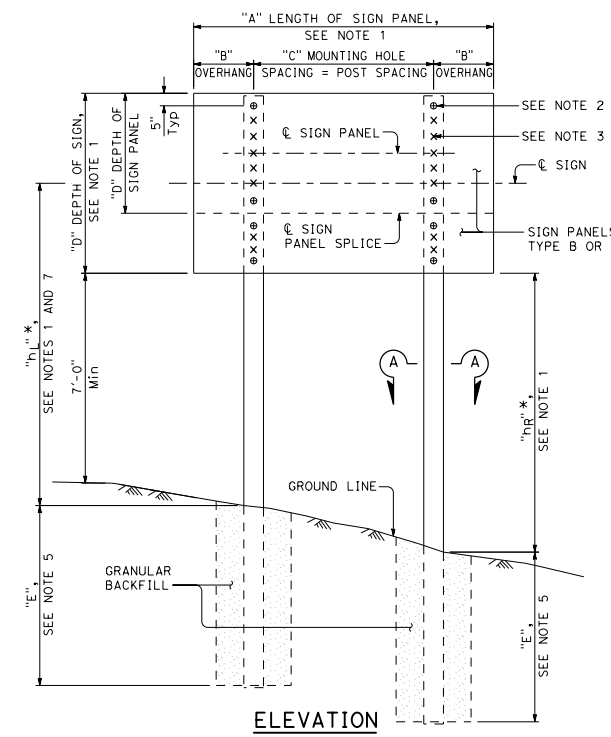

ELEVATION

See Table 1 for post spacing "C" and overhang "B".

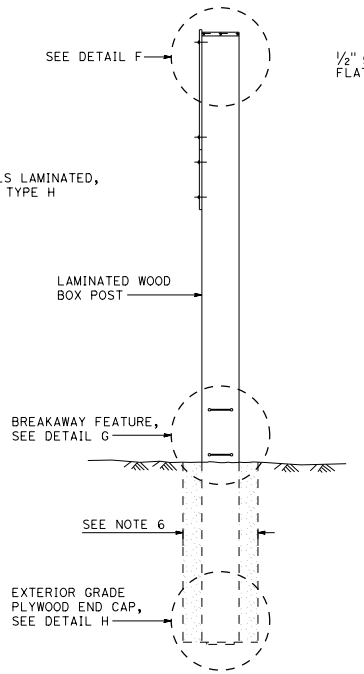

SIDE VIEW

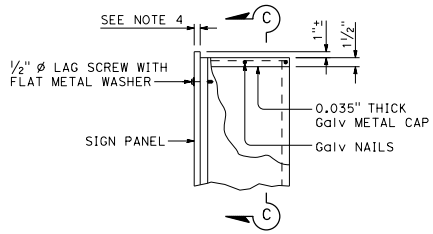

DETAIL F

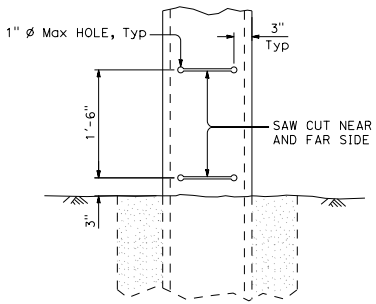

DETAIL G

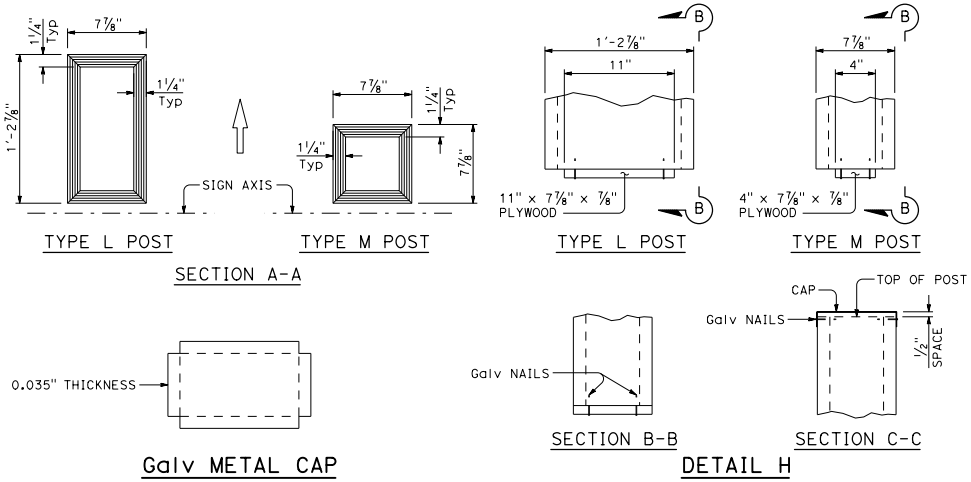

TYPE L POST TYPE M POST

SECTION A-A

TYPE L POST TYPE M POST

Galv METAL CAP

SECTION B-B SECTION C-C

DETAIL H

TABLE 1		
SIGN PANEL LENGTH (SEE NOTE 1)	SIGN PANEL OVERHANG	MOUNTING HOLE SPACING
"A"	"B"	"C"
8'-0"	1'-6"	5'-0"
9'-0"	1'-10"	5'-4"
10'-0"	2'-0"	6'-0"
11'-0"	2'-0"	7'-0"
12'-0"	2'-6"	7'-0"
13'-0"	2'-6"	8'-0"
14'-0"	2'-6"	9'-0"
15'-0"	3'-0"	9'-0"
16'-0"	3'-3"	9'-6"
17'-0"	3'-3"	10'-6"
18'-0"	3'-6"	11'-0"
19'-0"	3'-9"	11'-6"
20'-0"	4'-0"	12'-0"
21'-0"	4'-3"	12'-6"
22'-0"	4'-3"	13'-6"
23'-0"	4'-6"	14'-0"
24'-0"	4'-9"	14'-6"

NOTES:

1. See Project Plans for:
   a. Location of each sign.
   b. Length of sign panel "A".
   c. Depth of sign "D".
   d. Height "h_L" and "h_R" of centerline of sign above ground line at each post.
   e. Type of post, L and M.

   See Standard Plan RS1 for other details. See Standard Plan RS3C for maximum post height "h_L" or "h_R" of sign without an exit plaque. See Standard Plan RS3D or RS3E for maximum post height "h_L" or "h_R" of sign with an exit plaque.
2. "⊕" Indicates location of ¼" lag screws and existing holes in panels. Lag screws are to be embedded at least 1" into post.
3. "x" Indicates location of additional ¼" lag screws required depending on total panel area, as specified in Standard Plan RS3C. Lag screws are to be installed at the top and bottom of each panel splice.
4. Type B laminated sign panels are 1" nominal thick for sign lengths of 15'-0" and less. Panels over 15'-0" in length and Type H laminated sign panels are 2½" nominal thick.
5. Embedment "E" for Type L post shall conform to the requirements in Table 2. Embedment for Type M posts shall be 6'-0" minimum. Sign area does not include exit plaque.
6. Diameter of post holes for Type L posts shall be at least 2'-6". Diameter of post holes for Type M posts shall be at least 2'-0".
7. Dimensions shown on project plans are for fabrication. During installation adjust these dimensions to provide A level sign appoximately 7'-0" above roadway shoulder.
8. Minimum post embedment "E" for Type L post.

TABLE 2 (SEE NOTE 8)					
"h_L" OR "h_R"	TOTAL SIGN AREA SQFT				
	40 TO 90	90+ TO 140	140+ TO 190	190+ TO 240	240+ TO 290
9'-0" TO 13'-0"	6'	6.5'	7.5'	8.5'	9'
13'-0"+ TO 17'-0"	6'	7'	8'	9'	10'
17'-0"+ TO 21'-0"	6'	7.5'	9'	9'	
21'-0"+ TO 26'-0"	7'	8'	9'		

STATE OF CALIFORNIA
DEPARTMENT OF TRANSPORTATION

ROADSIDE SIGNS LAMINATED WOOD BOX POST TYPICAL INSTALLATION DETAILS No. 1

NO SCALE

RS3

2026 STANDARD PLAN RS3

7-1-26

Return to Table of Contents

Dist	COUNTY	ROUTE	POST MILES TOTAL PROJECT	SHEET No.	TOTAL SHEETS

REGISTERED CIVIL ENGINEER

September 18, 2026

PLANS APPROVAL DATE

REGISTERED PROFESSIONAL ENGINEER Mahesh Shrestha No. C80133 Exp. 9-30-26 CIVIL STATE OF CALIFORNIA

THE STATE OF CALIFORNIA OR ITS OFFICERS OR AGENTS SHALL NOT BE RESPONSIBLE FOR THE ACCURACY OR COMPLETENESS OF SCANNED COPIES OF THIS PLAN SHEET.

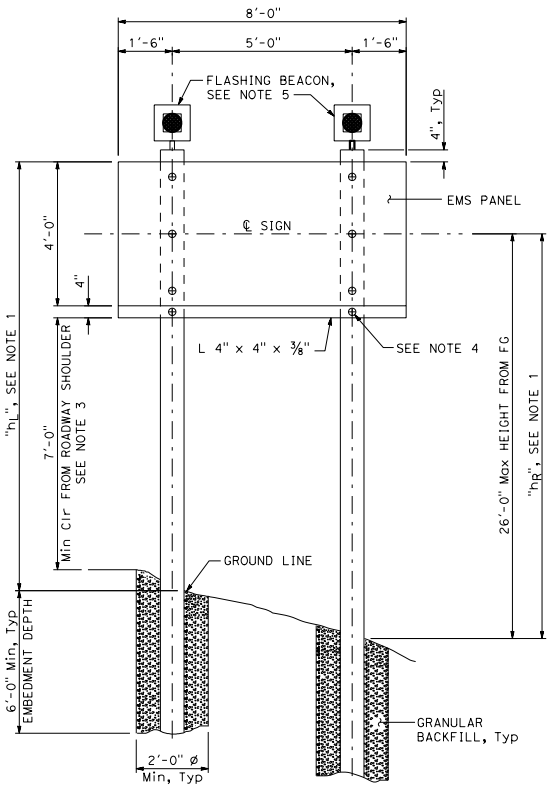

ELEVATION

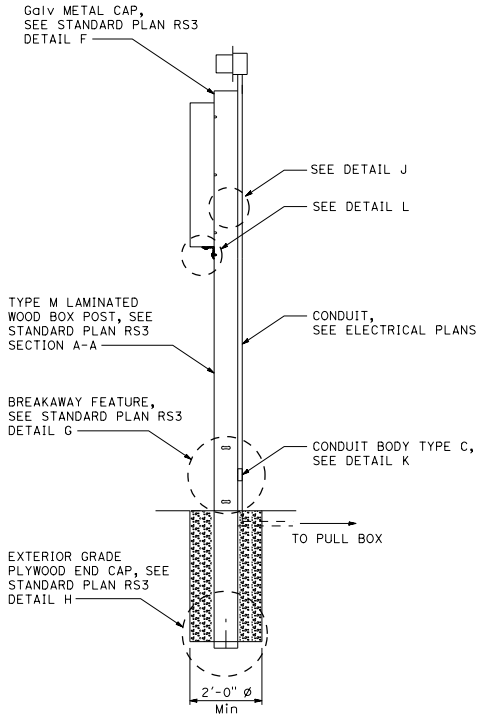

SIDE VIEW

NOTES:

1. See Project Plans for:
   a. Location of each sign.
   b. Height "h_L" and "h_R" of centerline of sign above ground line at each post.

   See Standard Plans RS1 and RS3 for embedment depth and other details.
2. Dimensions shown on project plans are for fabrication.
3. During installation adjust these dimensions to provide a level sign at least 7'-0" above roadway shoulder.
4. "⊕" Indicates location of 1/4" ø lag screw and existing holes.
5. 1 1/2" NPS pipe to be plumbed into bottom of flashing beacon.
6. U clamp connections spaced 5'-0" apart along post.
7. 1/4" ø clamp screw, embedded at least one inch into post.
8. Install EMS behind a guardrail or outside the clear recovery zone.

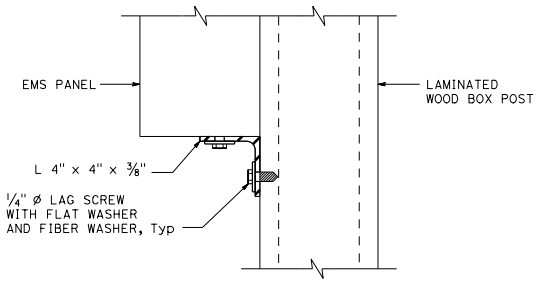

DETAIL L

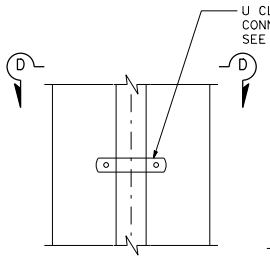

DETAIL J

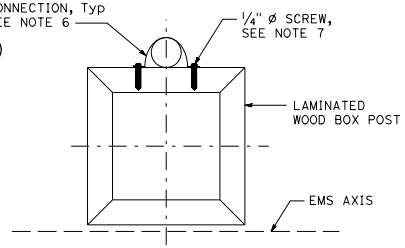

SECTION D-D

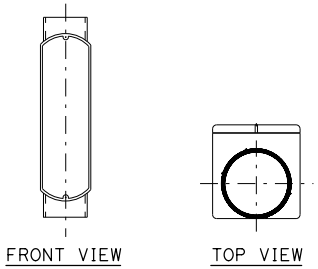

DETAIL K
CONDUIT BOX

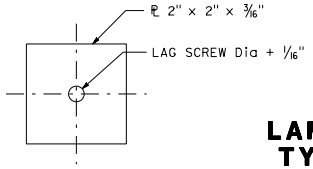

PLATE WASHER

STATE OF CALIFORNIA
DEPARTMENT OF TRANSPORTATION

ROADSIDE SIGNS
LAMINATED WOOD BOX POST
TYPICAL EMS INSTALLATION
DETAILS No. 2

NO SCALE

RS3A

2026 STANDARD PLAN RS3A

7-1-26

Return to Table of Contents

Dist	COUNTY	ROUTE	POST MILES TOTAL PROJECT	SHEET No.	TOTAL SHEETS

REGISTERED CIVIL ENGINEER

September 18, 2026

PLANS APPROVAL DATE

REGISTERED PROFESSIONAL ENGINEER Mahesh Shrestha No. C80133 Exp. 9-30-26 CIVIL STATE OF CALIFORNIA

THE STATE OF CALIFORNIA OR ITS OFFICERS OR AGENTS SHALL NOT BE RESPONSIBLE FOR THE ACCURACY OR COMPLETENESS OF SCANNED COPIES OF THIS PLAN SHEET.

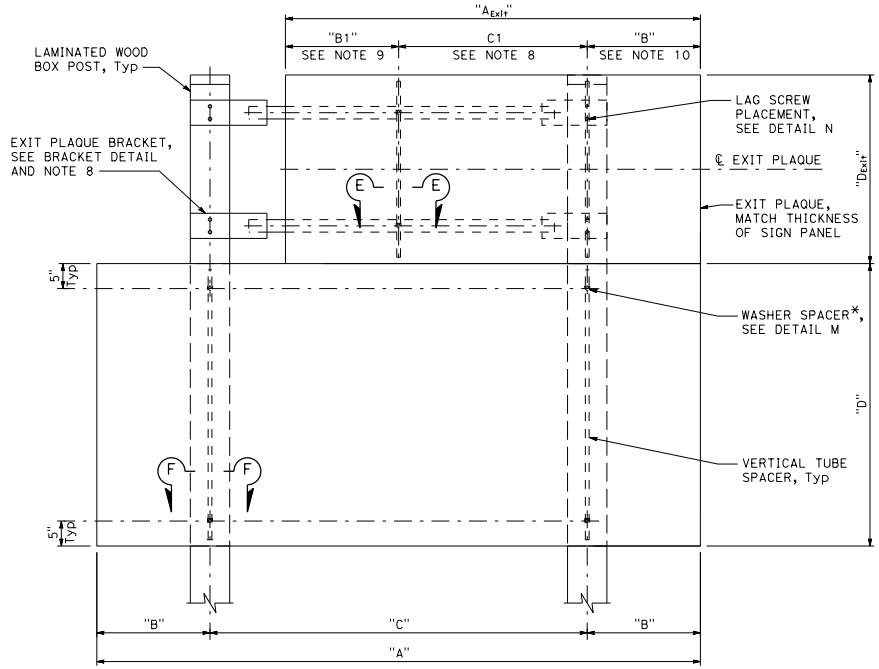

FRONT ELEVATION

Laminated wood box post sign

(* All locations not shown for clarity, See RS3 and RS3C for number of screws)

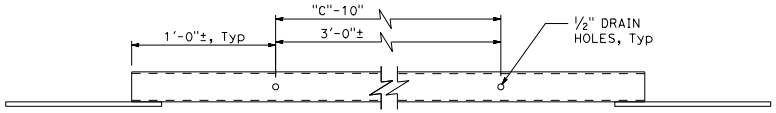

BOTTOM VIEW

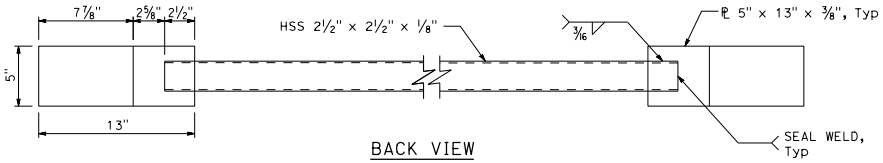

BACK VIEW

EXIT PLAQUE BRACKET

At laminated wood box post sign

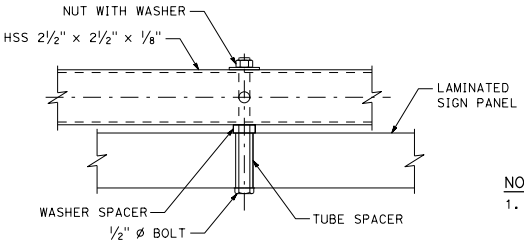

SECTION E-E

At exit plaque bracket

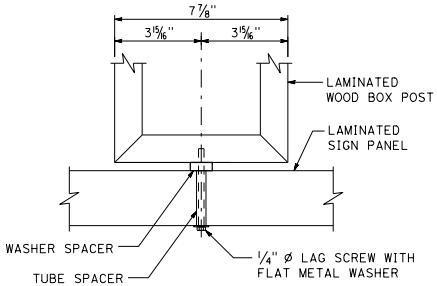

SECTION F-F

At laminated wood box post sign

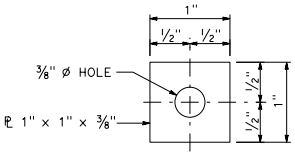

DETAIL M

WASHER SPACER

Fits behind sign panel

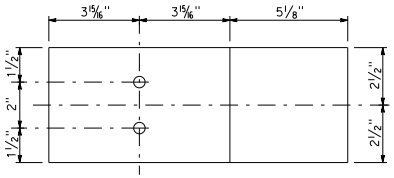

DETAIL N

Connection plate

NOTES:

1. See Project Plans for:
   a. Location of each sign.
   b. Length of Sign Panel "A".
   c. Depth of Sign Panel "D".
   d. Height "h_L" and "h_R" of centerline of sign above ground line at each post.
   e. Length of exit plaque "A_{Exit}".
   f. Depth of exit plaque "D_{Exit}".

   See Standard Plans RS1, RS3, RS3D, AND RS3E for other details.
2. Grade 50 steel used for connection plate.
3. "⊕" Indicates location of 1/4" ø lag screw and existing holes, see Detail N.
4. 1/4" ø lag screw is embedded at least one inch into post.
5. E70 filler metal is used for weld connection.
6. Embedment depth "E" is determined using Table 1.
7. For exit plaques with depth between 3'-0" and 4'-6", add a third connection bracket along exit plaque centerline.
8. C1 is "A_{Exit}-B-B1".
9. If C1 is less than 1'-0", replace B1 with 2'-0". Then C1 is "A_{Exit}-B-2'".
10. Overhang for exit plaque shall match sign panel overhang.

TABLE 1

EMBEDMENT DEPTH "E" WITH EXIT PLAQUE INSTALLATION

"h_L" OR "h_R"	SIGN AREA (SQFT) (DOES NOT INCLUDE AREA OF EXIT PLAQUE)			
	40 TO 90	90+ TO 140	140+ TO 190	190+ TO 240
9'-0"+ TO 13'-0"	6'-0"	6'-0"	7'-6"	8'-6"
13'-0"+ TO 17'-0"	6'-0"	7'-0"	8'-0"	9'-0"
17'-0"+ TO 21'-0"	6'-0"	7'-6"	9'-0"	9'-0"
21'-0"+ TO 26'-0"	7'-0"	8'-0"	9'-0"	N/A

STATE OF CALIFORNIA
DEPARTMENT OF TRANSPORTATION

ROADSIDE SIGNS LAMINATED WOOD BOX POST EXIT PLAQUE INSTALLATION DETAILS No. 3

NO SCALE

RS3B

2026 STANDARD PLAN RS3B

7-1-26

Return to Table of Contents

Dist	COUNTY	ROUTE	POST MILES TOTAL PROJECT	SHEET No.	TOTAL SHEETS

REGISTERED CIVIL ENGINEER

September 18, 2026

PLANS APPROVAL DATE

REGISTERED PROFESSIONAL ENGINEER
Mahesh Shrestha
No. C80133
Exp. 9-30-26
CIVIL
STATE OF CALIFORNIA

THE STATE OF CALIFORNIA OR ITS OFFICERS OR AGENTS SHALL NOT BE RESPONSIBLE FOR THE ACCURACY OR COMPLETENESS OF SCANNED COPIES OF THIS PLAN SHEET.

PANEL AREA (SQFT)	MINIMUM SCREWS PER POST
20	2
40	3
60	4
80	5
100	6
120	8
140	9
160	10
180	11
200	12
220	13
240	15

PANEL LENGTH 8'-0" TO 12'-0"		
PANEL DEPTH (FT)	SCREWS PER POST	SCREW SPACING (INCHES)
2	3	7.00
3	3	13.00
4	4	12.50
5	4	16.50

PANEL LENGTH 13'-0" TO 16'-0"		
PANEL DEPTH (FT)	SCREWS PER POST	SCREW SPACING (INCHES)
2	3	7.00
3	4	8.50
4	5	9.50
5	5	12.50

PANEL LENGTH 17'-0" TO 20'-0"		
PANEL DEPTH (FT)	SCREWS PER POST	SCREW SPACING (INCHES)
2	3	7.00
3	4	8.50
4	5	9.50
5	6	10.00

PANEL LENGTH 21'-0" TO 24'-0"		
PANEL DEPTH (FT)	SCREWS PER POST	SCREW SPACING (INCHES)
2	4	4.50
3	5	6.50
4	6	7.50
5	8	7.00

NOTES:

1. See Project Plans for:
   a. Location of each sign.
   b. Length of Sign Panel "A".
   c. Depth of Sign Panel "D".
   d. Height "h_L" and "h_R" of centerline of sign above ground line at each post.
   See Standard Plan RS1 for other details.
2. See Standard Plan RS3 for Laminated Wood Box Post and sign installation details.

"D" SIGN PANEL DEPTH ↓	MAXIMUM ALLOWABLE "h_R" OR "h_L" FOR TYPE M POST WITHOUT AN EXIT PLAQUE																
	"A" SIGN PANEL LENGTH (FT) →																
	8	9	10	11	12	13	14	15	16	17	18	19	20	21	22	23	24
24"	26	26	26	26	26	26	26	26	26	26	26	26	26	26	26	25	24
36"	26	26	26	26	26	26	26	25	24	23	22	21	20	19	19	18	17
48"	26	26	26	26	24	23	21	20	19	18	17	16	16	15	14	14	13
60"	26	25	23	22	20	19	18	17	16	15	14	13	13	12	12	11	11
72"	24	22	20	19	17	16	15	14	13	12	12	11	11	10	10	N/A	N/A
84"	21	19	18	16	15	14	13	12	11	11	N/A	N/A	N/A	N/A	N/A	N/A	N/A
96"	19	17	16	14	13	12	11	11	N/A	N/A	N/A	N/A	N/A	N/A	N/A	N/A	N/A
108"	17	15	14	13	12	N/A	N/A	N/A	N/A	N/A	N/A	N/A	N/A	N/A	N/A	N/A	N/A
120"	16	14	13	12	N/A	N/A	N/A	N/A	N/A	N/A	N/A	N/A	N/A	N/A	N/A	N/A	N/A

"D" SIGN PANEL DEPTH ↓	MAXIMUM ALLOWABLE "h_R" OR "h_L" FOR TYPE L POST WITHOUT AN EXIT PLAQUE																
	"A" SIGN PANEL LENGTH (FT) →																
	8	9	10	11	12	13	14	15	16	17	18	19	20	21	22	23	24
24"	N/A	N/A	N/A	N/A	N/A	N/A	N/A	N/A	N/A	N/A	N/A	N/A	N/A	N/A	N/A	N/A	N/A
36"	N/A	N/A	N/A	N/A	N/A	N/A	N/A	N/A	N/A	N/A	N/A	N/A	N/A	N/A	N/A	N/A	N/A
48"	N/A	N/A	N/A	N/A	N/A	N/A	N/A	N/A	N/A	N/A	N/A	N/A	N/A	N/A	N/A	N/A	N/A
60"	N/A	N/A	N/A	N/A	N/A	N/A	N/A	N/A	N/A	N/A	N/A	N/A	N/A	N/A	N/A	N/A	N/A
72"	N/A	N/A	N/A	N/A	N/A	N/A	N/A	N/A	N/A	N/A	N/A	N/A	N/A	N/A	N/A	22	21
84"	N/A	N/A	N/A	N/A	N/A	N/A	N/A	N/A	N/A	N/A	24	23	21	21	20	19	18
96"	N/A	N/A	N/A	N/A	N/A	N/A	N/A	N/A	23	22	21	20	19	18	17	17	16
108"	N/A	N/A	N/A	N/A	N/A	25	24	22	21	20	19	18	17	16	15	15	14
120"	N/A	N/A	N/A	N/A	25	23	22	20	19	18	17	16	15	15	14	13	13

STATE OF CALIFORNIA
DEPARTMENT OF TRANSPORTATION

ROADSIDE SIGNS
LAMINATED WOOD BOX POST
WORKABLE CONFIGURATIONS
DETAILS No. 4

NO SCALE

RS3C

2026 STANDARD PLAN RS3C

7-1-26

Return to Table of Contents

Dist	COUNTY	ROUTE	POST MILES TOTAL PROJECT	SHEET No.	TOTAL SHEETS

REGISTERED CIVIL ENGINEER

September 18, 2026
PLANS APPROVAL DATE

REGISTERED PROFESSIONAL ENGINEER
Mahesh Shrestha
No. C80133
Exp. 9-30-26
CIVIL
STATE OF CALIFORNIA

THE STATE OF CALIFORNIA OR ITS OFFICERS OR AGENTS SHALL NOT BE RESPONSIBLE FOR THE ACCURACY OR COMPLETENESS OF SCANNED COPIES OF THIS PLAN SHEET.

NOTES:

1. See Project Plans for:
   a. Location of each sign.
   b. Length of Sign Panel "A".
   c. Depth of Sign Panel "D".
   d. Height "h_L" and "h_R" of centerline of sign above ground line at each post.
   See Standard Plan RS1 for other details.
2. See Standard Plans RS3 and RS3B for Laminated Wood Box Post and sign installation details.
3. Width of exit plaque shall not exceed width of sign panel.
4. See Standard Plan RS3C for number of screws per post.

"D" SIGN PANEL DEPTH ↓	MAXIMUM ALLOWABLE "h_R" OR "h_L" FOR TYPE M POST WITH AN EXIT PLAQUE, MAXIMUM DEPTH 2'-6"																
	"A" SIGN PANEL LENGTH (FT) →																
	8	9	10	11	12	13	14	15	16	17	18	19	20	21	22	23	24
24"	N/A	N/A	24	22	21	19	18	17	16	15	14	13	13	12	12	11	10
36"	N/A	N/A	20	19	17	16	15	14	13	12	12	11	10	10	9	9	N/A
48"	N/A	N/A	18	16	15	14	13	12	11	10	10	9	9	N/A	N/A	N/A	N/A
60"	N/A	N/A	15	14	13	12	11	10	N/A	N/A	N/A	N/A	N/A	N/A	N/A	N/A	N/A
72"	N/A	N/A	14	12	11	N/A	N/A	N/A	N/A	N/A	N/A	N/A	N/A	N/A	N/A	N/A	N/A
84"	N/A	N/A	12	11	N/A	N/A	N/A	N/A	N/A	N/A	N/A	N/A	N/A	N/A	N/A	N/A	N/A
96"	N/A	N/A	11	N/A	N/A	N/A	N/A	N/A	N/A	N/A	N/A	N/A	N/A	N/A	N/A	N/A	N/A
108"	N/A	N/A	N/A	N/A	N/A	N/A	N/A	N/A	N/A	N/A	N/A	N/A	N/A	N/A	N/A	N/A	N/A
120"	N/A	N/A	N/A	N/A	N/A	N/A	N/A	N/A	N/A	N/A	N/A	N/A	N/A	N/A	N/A	N/A	N/A

"D" SIGN PANEL DEPTH ↓	MAXIMUM ALLOWABLE "h_R" OR "h_L" FOR TYPE L POST WITH AN EXIT PLAQUE, MAXIMUM DEPTH 2'-6"																
	"A" SIGN PANEL LENGTH (FT) →																
	8	9	10	11	12	13	14	15	16	17	18	19	20	21	22	23	24
24"	N/A	N/A	N/A	N/A	N/A	N/A	N/A	N/A	N/A	N/A	N/A	N/A	N/A	N/A	N/A	N/A	N/A
36"	N/A	N/A	N/A	N/A	N/A	N/A	N/A	N/A	N/A	N/A	N/A	N/A	N/A	N/A	N/A	N/A	21
48"	N/A	N/A	N/A	N/A	N/A	N/A	N/A	N/A	N/A	N/A	N/A	N/A	N/A	21	20	19	18
60"	N/A	N/A	N/A	N/A	N/A	N/A	N/A	N/A	23	22	21	20	19	18	17	16	16
72"	N/A	N/A	N/A	N/A	N/A	25	24	22	21	20	19	18	17	16	15	14	14
84"	N/A	N/A	N/A	N/A	25	23	21	20	19	18	17	16	15	14	13	13	12
96"	N/A	N/A	N/A	24	23	21	19	18	17	16	15	14	13	13	12	12	11
108"	N/A	N/A	24	22	21	19	18	17	15	14	14	13	12	12	N/A	N/A	N/A
120"	N/A	N/A	23	21	19	18	16	15	14	13	12	12	N/A	N/A	N/A	N/A	N/A

STATE OF CALIFORNIA
DEPARTMENT OF TRANSPORTATION

ROADSIDE SIGNS
LAMINATED WOOD BOX POST
WORKABLE CONFIGURATIONS
DETAILS No. 5

NO SCALE

RS3D

2026 STANDARD PLAN RS3D

7-1-26

Return to Table of Contents

Dist	COUNTY	ROUTE	POST MILES TOTAL PROJECT	SHEET No.	TOTAL SHEETS

REGISTERED CIVIL ENGINEER

September 18, 2026
PLANS APPROVAL DATE

REGISTERED PROFESSIONAL ENGINEER
Mahesh Shrestha
No. C80133
Exp. 9-30-26
CIVIL
STATE OF CALIFORNIA

THE STATE OF CALIFORNIA OR ITS OFFICERS OR AGENTS SHALL NOT BE RESPONSIBLE FOR THE ACCURACY OR COMPLETENESS OF SCANNED COPIES OF THIS PLAN SHEET.

NOTES:

1. See Project Plans for:
   a. Location of each sign.
   b. Length of Sign Panel "A".
   c. Depth of Sign Panel "D".
   d. Height "h_L" and "h_R" of centerline of sign above ground line at each post.
   See Standard Plan RS1 for other details.
2. See Standard Plans RS3 and RS3B for Laminated Wood Box Post and sign installation details.
3. Width of exit plaque shall not exceed width of sign panel.
4. See Standard Plan RS3C for number of screws per post.

"D" SIGN PANEL DEPTH ↓	MAXIMUM ALLOWABLE "h_R" OR "h_L" FOR TYPE M POST WITH AN EXIT PLAQUE, MINIMUM DEPTH 3'-0", MAXIMUM DEPTH 4'-6"																
	"A" SIGN PANEL LENGTH (FT) →																
	8	9	10	11	12	13	14	15	16	17	18	19	20	21	22	23	24
24"	N/A	N/A	17	15	14	13	12	11	10	9	9	8	8	N/A	N/A	N/A	N/A
36"	N/A	N/A	14	13	12	11	10	9	N/A	N/A	N/A	N/A	N/A	N/A	N/A	N/A	N/A
48"	N/A	N/A	13	11	10	9	9	N/A	N/A	N/A	N/A	N/A	N/A	N/A	N/A	N/A	N/A
60"	N/A	N/A	11	10	N/A	N/A	N/A	N/A	N/A	N/A	N/A	N/A	N/A	N/A	N/A	N/A	N/A
72"	N/A	N/A	10	N/A	N/A	N/A	N/A	N/A	N/A	N/A	N/A	N/A	N/A	N/A	N/A	N/A	N/A
84"	N/A	N/A	N/A	N/A	N/A	N/A	N/A	N/A	N/A	N/A	N/A	N/A	N/A	N/A	N/A	N/A	N/A
96"	N/A	N/A	N/A	N/A	N/A	N/A	N/A	N/A	N/A	N/A	N/A	N/A	N/A	N/A	N/A	N/A	N/A
108"	N/A	N/A	N/A	N/A	N/A	N/A	N/A	N/A	N/A	N/A	N/A	N/A	N/A	N/A	N/A	N/A	N/A
120"	N/A	N/A	N/A	N/A	N/A	N/A	N/A	N/A	N/A	N/A	N/A	N/A	N/A	N/A	N/A	N/A	N/A

"D" SIGN PANEL DEPTH ↓	MAXIMUM ALLOWABLE "h_R" OR "h_L" FOR TYPE L POST WITH AN EXIT PLAQUE, MINIMUM DEPTH 3'-0", MAXIMUM DEPTH 4'-6"																
	"A" SIGN PANEL LENGTH (FT) →																
	8	9	10	11	12	13	14	15	16	17	18	19	20	21	22	23	24
24"	N/A	N/A	N/A	N/A	N/A	N/A	N/A	N/A	N/A	N/A	N/A	N/A	N/A	20	19	18	17
36"	N/A	N/A	N/A	N/A	N/A	N/A	N/A	N/A	22	21	20	19	18	17	16	16	15
48"	N/A	N/A	N/A	N/A	N/A	N/A	N/A	21	20	19	18	17	16	15	14	14	13
60"	N/A	N/A	N/A	N/A	24	22	20	19	18	17	16	15	14	13	13	12	11
72"	N/A	N/A	N/A	23	22	20	18	17	16	15	14	13	12	12	11	11	10
84"	N/A	N/A	24	22	20	18	17	16	14	14	13	12	11	11	N/A	N/A	N/A
96"	N/A	N/A	22	20	18	17	15	14	13	12	12	11	N/A	N/A	N/A	N/A	N/A
108"	N/A	N/A	20	18	17	15	14	13	12	N/A	N/A	N/A	N/A	N/A	N/A	N/A	N/A
120"	N/A	N/A	19	17	15	14	13	12	N/A	N/A	N/A	N/A	N/A	N/A	N/A	N/A	N/A

STATE OF CALIFORNIA
DEPARTMENT OF TRANSPORTATION

ROADSIDE SIGNS
LAMINATED WOOD BOX POST
WORKABLE CONFIGURATIONS
DETAILS No. 6

NO SCALE

RS3E

2026 STANDARD PLAN RS3E

7-1-26

Return to Table of Contents

Dist	COUNTY	ROUTE	POST MILES TOTAL PROJECT	SHEET No.	TOTAL SHEETS

REGISTERED CIVIL ENGINEER

September 18, 2026

PLANS APPROVAL DATE

REGISTERED PROFESSIONAL ENGINEER Mahesh Shrestha No. C80133 Exp. 9-30-26 CIVIL STATE OF CALIFORNIA

THE STATE OF CALIFORNIA OR ITS OFFICERS OR AGENTS SHALL NOT BE RESPONSIBLE FOR THE ACCURACY OR COMPLETENESS OF SCANNED COPIES OF THIS PLAN SHEET.

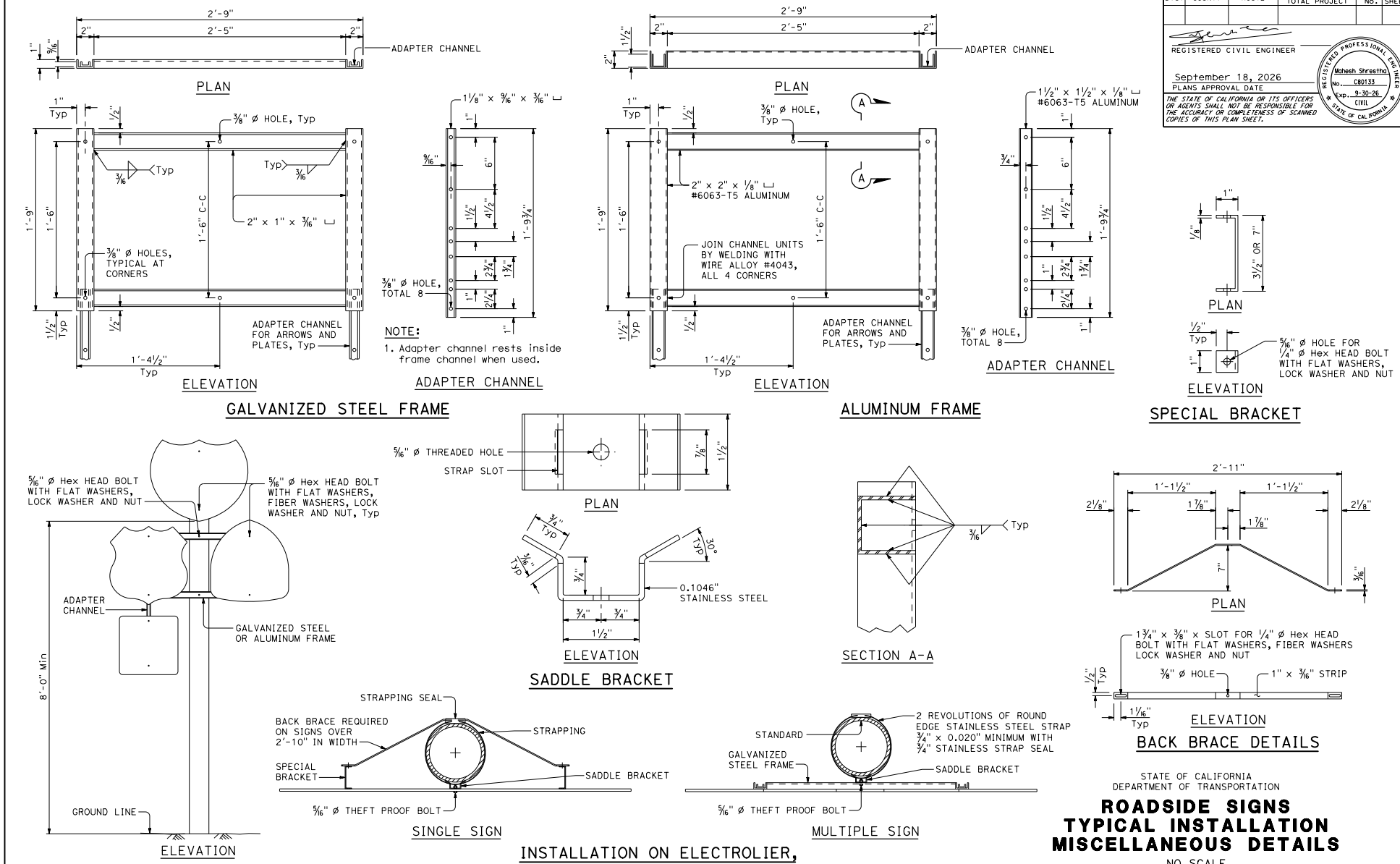

STATE OF CALIFORNIA
DEPARTMENT OF TRANSPORTATION

ROADSIDE SIGNS TYPICAL INSTALLATION MISCELLANEOUS DETAILS

NO SCALE

RS4

7-1-26

Return to Table of Contents

Dist	COUNTY	ROUTE	POST MILES TOTAL PROJECT	SHEET No.	TOTAL SHEETS

REGISTERED CIVIL ENGINEER

September 18, 2026

PLANS APPROVAL DATE

REGISTERED PROFESSIONAL ENGINEER Mahesh Shrestha No. C80133 Exp. 9-30-26 CIVIL STATE OF CALIFORNIA

THE STATE OF CALIFORNIA OR ITS OFFICERS OR AGENTS SHALL NOT BE RESPONSIBLE FOR THE ACCURACY OR COMPLETENESS OF SCANNED COPIES OF THIS PLAN SHEET.

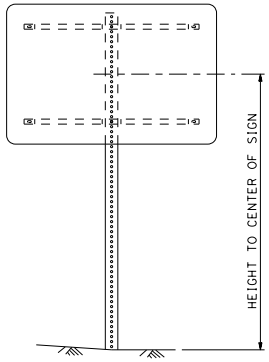

SINGLE POST INSTALLATION

POST SIZE	Max AREA (SQUARE FEET) OF SIGN							SLEEVE SIZE
2" x 2" x 12 Ga	10.8	8.9	7.6	6.6	5.9	5.3	4.8	2½" x 2½" x 7 Ga
2½" x 2½" x 10 Ga	20	18	16	14	12	11	10	3" x 3" x 7 Ga
HEIGHT TO CENTER OF SIGN SINGLE POST GROUND SIGNS 100 MPH WIND SPEED	5'-0"	6'-0"	7'-0"	8'-0"	9'-0"	10'-0"	11'-0"	-

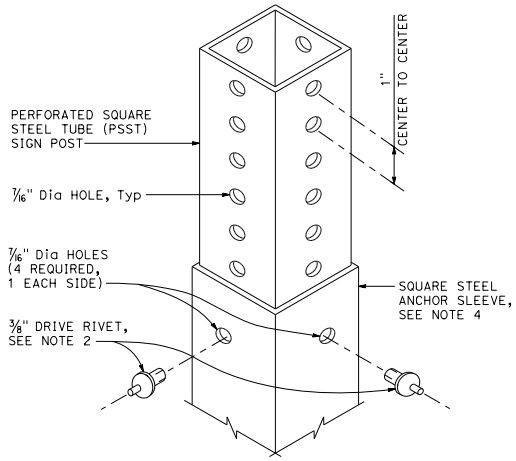

DETAIL A

NOTES:

1. The sign post shall have 7/16" diameter perforations 1" on center on all four sides for the full length.
2. Use two drive rivets to fasten assembled sign and sign post into anchor sleeve. Install drive rivets or fastener alternative into the sides facing traffic.
3. All steel sign posts and anchor sleeves shall be galvanized.
4. All anchor sleeves shall be embedded in PCC.
5. For details not shown, see Standard Plans RS1 and RS2.
6. Steel post: fy = 60 ksi.

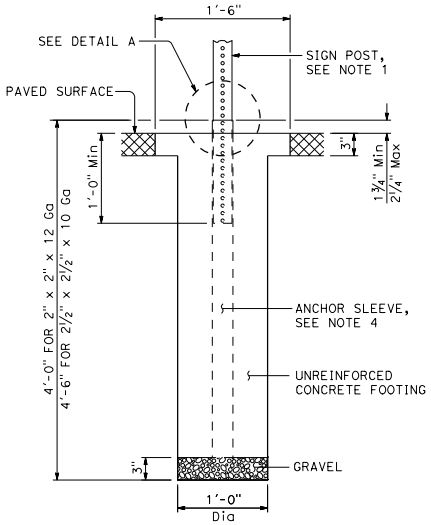

ANCHOR SLEEVE IN PAVED SURFACE

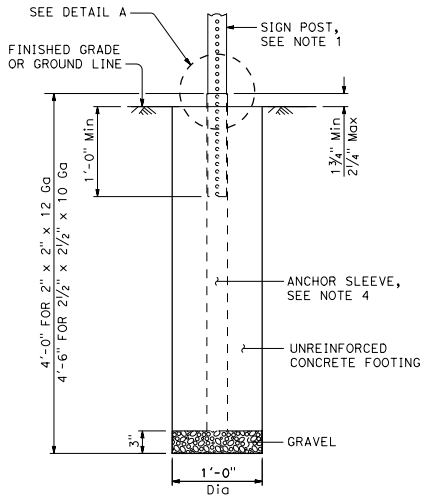

ANCHOR SLEEVE IN UNPAVED SURFACE

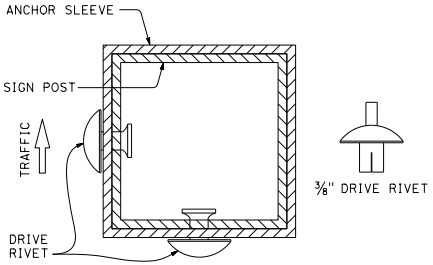

FASTENER

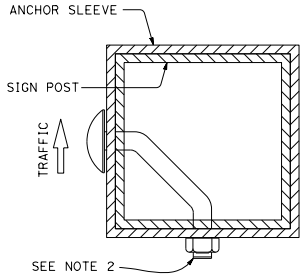

FASTENER ALTERNATIVE

STATE OF CALIFORNIA
DEPARTMENT OF TRANSPORTATION

ROADSIDE SIGNS
PSST POST
TYPICAL INSTALLATION
DETAILS No. 1

NO SCALE

RS5

2026 STANDARD PLAN RS5

7-1-26

Return to Table of Contents

Dist	COUNTY	ROUTE	POST MILES TOTAL PROJECT	SHEET No.	TOTAL SHEETS

REGISTERED CIVIL ENGINEER

September 18, 2026

PLANS APPROVAL DATE

REGISTERED PROFESSIONAL ENGINEER Mahesh Shrestha No. C80133 Exp. 9-30-26 CIVIL STATE OF CALIFORNIA

THE STATE OF CALIFORNIA OR ITS OFFICERS OR AGENTS SHALL NOT BE RESPONSIBLE FOR THE ACCURACY OR COMPLETENESS OF SCANNED COPIES OF THIS PLAN SHEET.

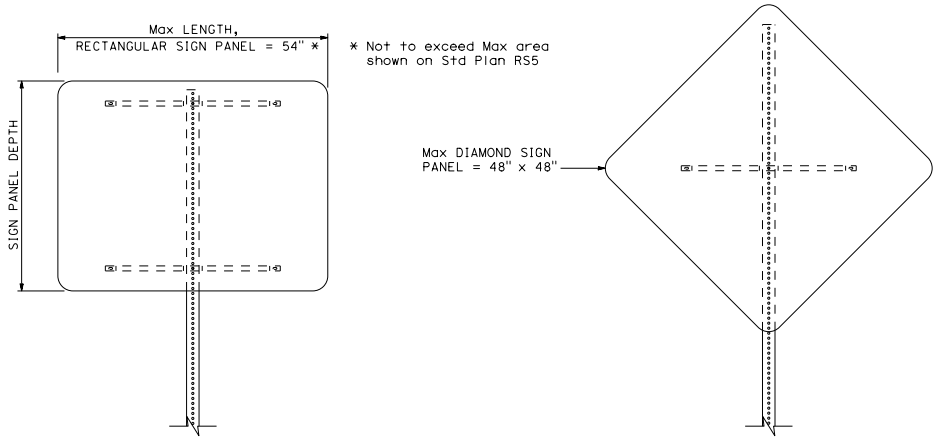

BALANCED
See Note 3

BALANCED
See Note 4

SINGLE POST INSTALLATION

NOTES:

1. Balanced single post installations of single sheet aluminum panel signs require back braces when 2'-10" or more in length.
2. Wood block spacers are not required for signs mounted on metal posts.
3. Attach rectangular sign panel to sign post with bolts at the top and bottom. Center may be attached with either bolt or 3/8" drive rivets.
4. Attach diamond sign panel to sign post with bolt at center. Top and bottom may be attached with either bolts or 3/8" drive rivets.
5. For details not shown, see Standard Plans RS1 and RS2.

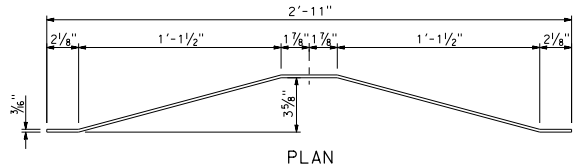

PLAN

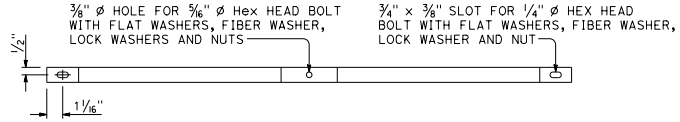

ELEVATION

BACK BRACE DETAIL

See note 1

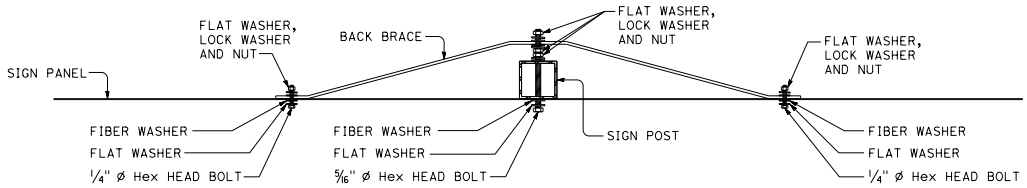

BACK BRACE MOUNTING DETAIL

See Note 1

STATE OF CALIFORNIA
DEPARTMENT OF TRANSPORTATION

ROADSIDE SIGNS
PSST POST
TYPICAL INSTALLATION
DETAILS No. 2

NO SCALE

RS6

2026 STANDARD PLAN RS6

7-1-26

Return to Table of Contents

Dist	COUNTY	ROUTE	POST MILES TOTAL PROJECT	SHEET No.	TOTAL SHEETS

REGISTERED CIVIL ENGINEER

September 18, 2026
PLANS APPROVAL DATE

REGISTERED PROFESSIONAL ENGINEER
Mahesh Shrestha
No. C80133
Exp. 9-30-26
CIVIL
STATE OF CALIFORNIA

THE STATE OF CALIFORNIA OR ITS OFFICERS OR AGENTS SHALL NOT BE RESPONSIBLE FOR THE ACCURACY OR COMPLETENESS OF SCANNED COPIES OF THIS PLAN SHEET.

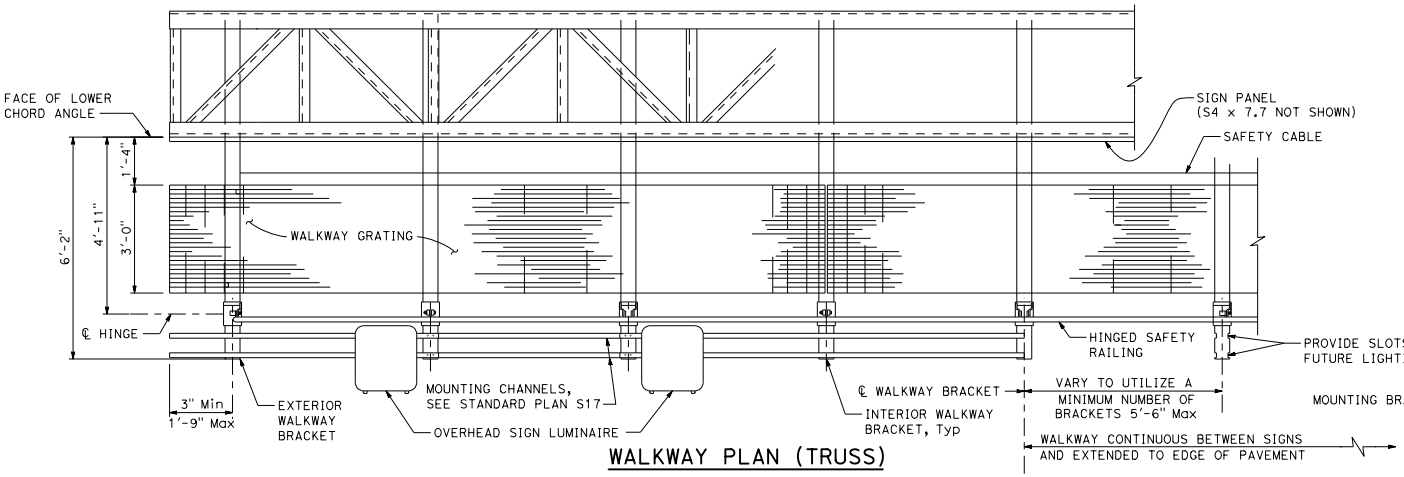

WALKWAY PLAN (TRUSS)

NOTES:

1. For spacing of overhead sign luminaire, see Standard Plan ES-15A.
2. For safety lug details, see Standard Plan S17.
3. For double faced sign frames with double walkways, use a total 8 bolt assemblies per bracket.
4. This sheet applies to truss, tubular, and bridge mounted, but not versatile truss.

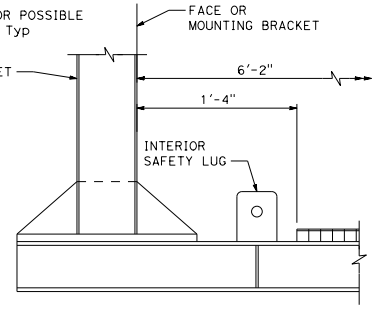

TUBULAR AND BRIDGE MOUNTED

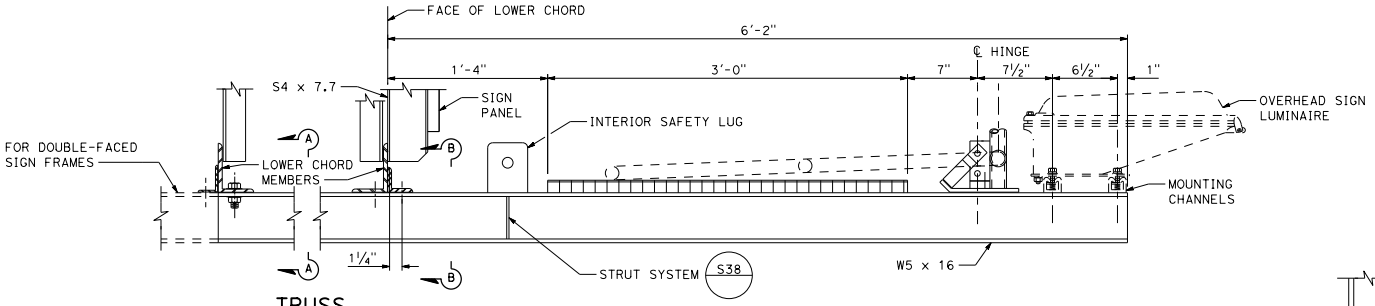

TRUSS

TYPICAL WALKWAY SECTION

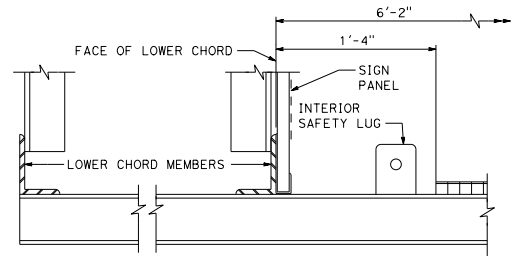

BOX BEAM CLOSED TRUSS

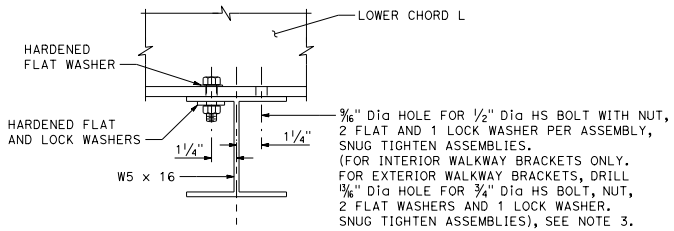

SECTION A-A

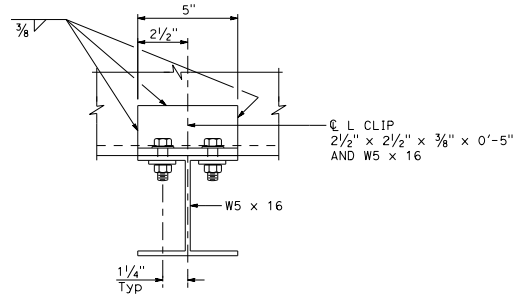

SECTION B-B

STATE OF CALIFORNIA
DEPARTMENT OF TRANSPORTATION

OVERHEAD SIGNS WALKWAY DETAILS No. 1

NO SCALE

S16

2026 STANDARD PLAN S16

7-1-26

Return to Table of Contents

Dist	COUNTY	ROUTE	POST MILES TOTAL PROJECT	SHEET No.	TOTAL SHEETS

REGISTERED CIVIL ENGINEER

September 18, 2026

PLANS APPROVAL DATE

REGISTERED PROFESSIONAL ENGINEER Mahesh Shrestha No. C80133 Exp. 9-30-26 CIVIL STATE OF CALIFORNIA

THE STATE OF CALIFORNIA OR ITS OFFICERS OR AGENTS SHALL NOT BE RESPONSIBLE FOR THE ACCURACY OR COMPLETENESS OF SCANNED COPIES OF THIS PLAN SHEET.

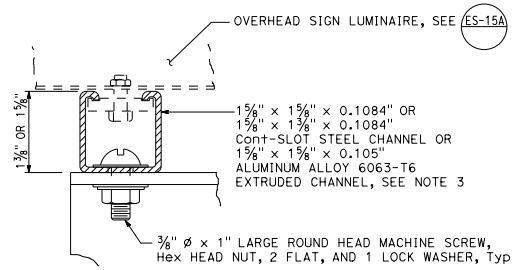

OVERHEAD SIGN LUMINAIRE MOUNTING CHANNEL DETAILS 1

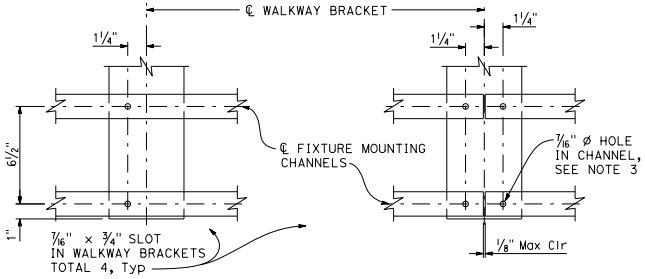

TYPICAL CONNECTION

CONNECTION AT SPLICE

OVERHEAD SIGN LUMINAIRE MOUNTING CHANNEL DETAILS 2

NOTES:

1. Welded type grating shall have 1 1/4" x 1/8" bearing bars at 1 3/16" centers with 1/4" diameter (or equal) cross bars at 4" centers. If mechanical lock grating is used, it shall be equal in strength to the welded type. Alternate hold-down clips may be submitted for approval.
2. Walkway grating and light fixture mounting channels to be continuous (no splices) over as many walkway brackets as practical and consistent with fabrication, ease of handling and assembly.
3. Contractor may substitute 1 5/8" x 1 5/8" x 0.1084" cont-slot steel channel with pre-punched slots not larger than 13/32" x 3". Slots shall be at bottom of channel and shall be parallel to channel. Slots shall be spaced not closer than 4" center to center.
4. Place an equal amount of washers on each side to align cable with end lug without restricting shakle bolt rotation or contacting cable.
5. This sheet applies to truss, tubular, and bridge mounted, but not versatile truss.

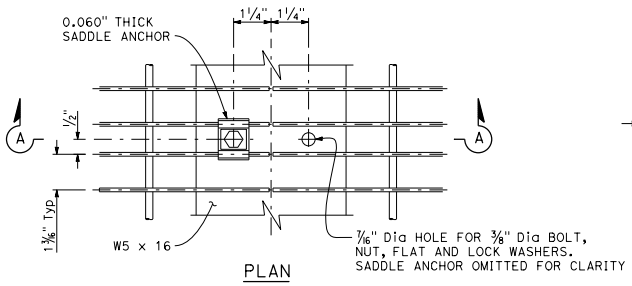

PLAN

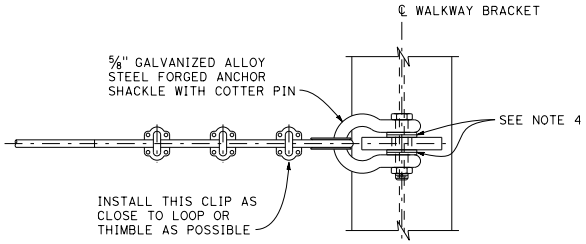

PLAN

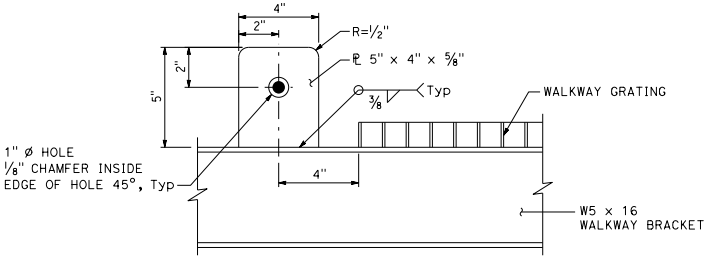

INTERIOR SAFETY LUG DETAIL

At every walkway bracket between exterior walkway brackets

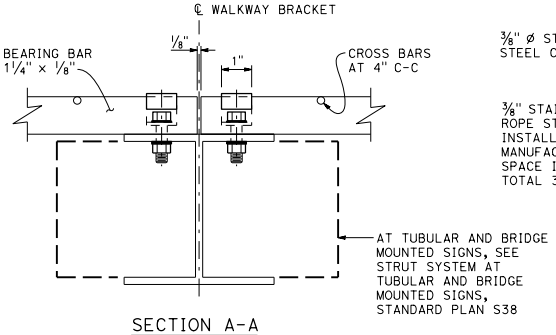

SECTION A-A

WALKWAY GRATING DETAILS

Shown at splice

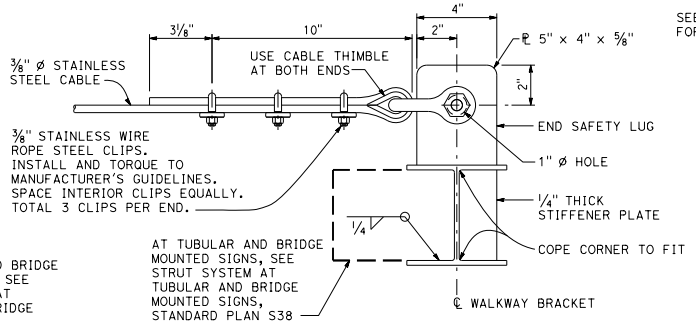

ELEVATION

END SAFETY CABLE DETAIL

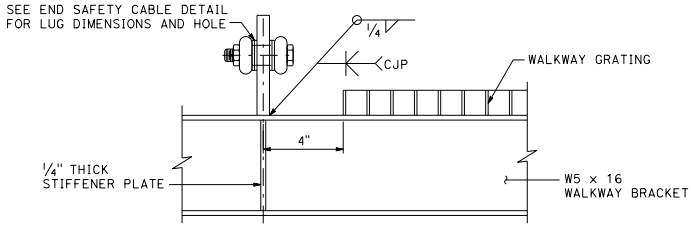

END SAFETY LUG DETAIL

At exterior walkway brackets

STATE OF CALIFORNIA
DEPARTMENT OF TRANSPORTATION

OVERHEAD SIGNS WALKWAY DETAILS No. 2

NO SCALE

S17

2026 STANDARD PLAN S17

7-1-26

Return to Table of Contents

Dist	COUNTY	ROUTE	POST MILES TOTAL PROJECT	SHEET No.	TOTAL SHEETS

REGISTERED CIVIL ENGINEER

September 18, 2026

PLANS APPROVAL DATE

REGISTERED PROFESSIONAL ENGINEER — Mahesh Shrestha — No. C80133 — Exp. 9-30-26 — CIVIL — STATE OF CALIFORNIA

THE STATE OF CALIFORNIA OR ITS OFFICERS OR AGENTS SHALL NOT BE RESPONSIBLE FOR THE ACCURACY OR COMPLETENESS OF SCANNED COPIES OF THIS PLAN SHEET.

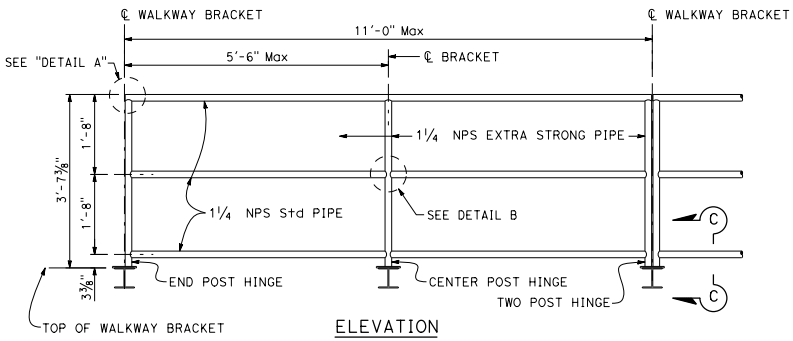

ELEVATION

SAFETY RAILING

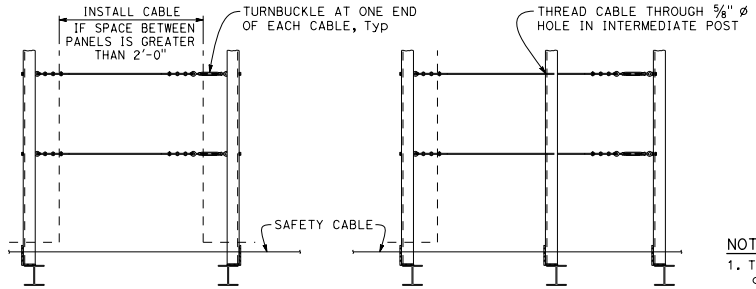

BETWEEN PANELS

BEYOND PANELS

UPPER SAFETY CABLE ELEVATION

For tubular structures

NOTE:

1. This sheet applies to truss, tubular, and bridge mounted, but not verstile truss.

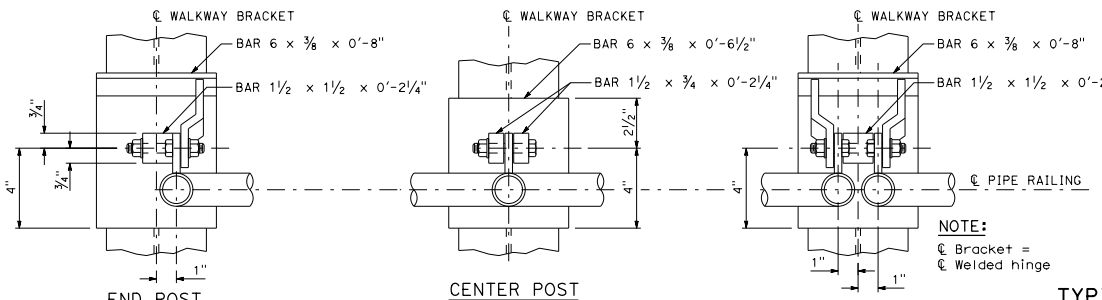

END POST

CENTER POST PLAN

TWO POST

NOTE:
℄ Bracket = ℄ Welded hinge

WELDED HINGE

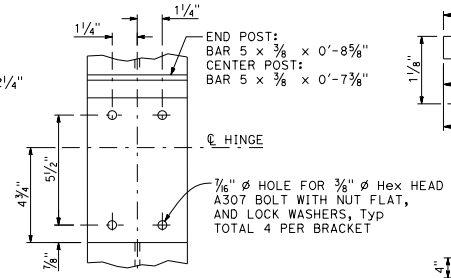

TYPICAL BOLTED (ALTERNATIVE) HINGED CONNECTION

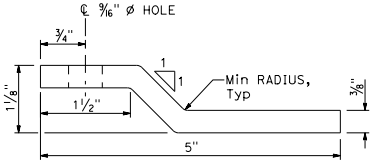

PLAN

KICKER BAR

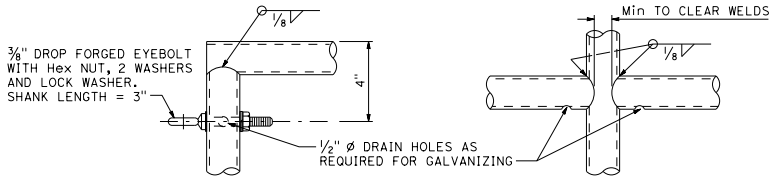

DETAIL A

NOTE:
Alternative venting methods may be used if approved by the Engineer.

DETAIL B

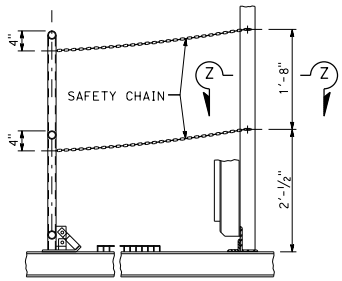

CHAIN ASSEMBLY

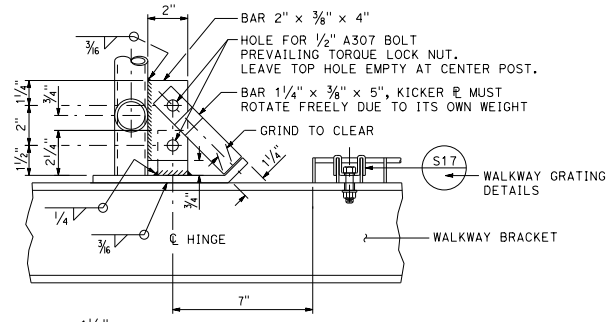

SECTION C-C

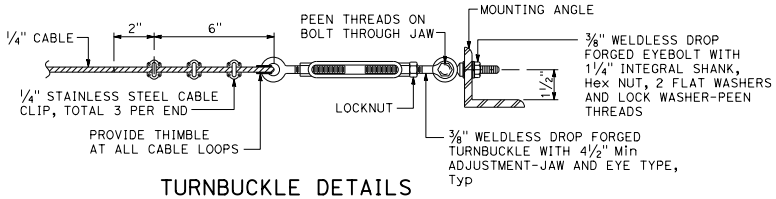

TURNBUCKLE DETAILS

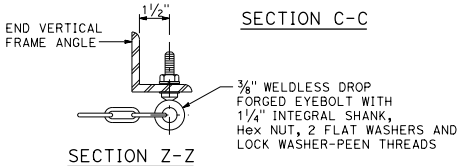

SECTION Z-Z

STATE OF CALIFORNIA
DEPARTMENT OF TRANSPORTATION

OVERHEAD SIGNS WALKWAY SAFETY RAILING DETAILS

NO SCALE

S18

2026 STANDARD PLAN S18

7-1-26

Return to Table of Contents

Dist	COUNTY	ROUTE	POST MILES TOTAL PROJECT	SHEET No.	TOTAL SHEETS

REGISTERED CIVIL ENGINEER

September 18, 2026
PLANS APPROVAL DATE

REGISTERED PROFESSIONAL ENGINEER
Mahesh Shrestha
No. C80133
Exp. 9-30-26
CIVIL
STATE OF CALIFORNIA

THE STATE OF CALIFORNIA OR ITS OFFICERS OR AGENTS SHALL NOT BE RESPONSIBLE FOR THE ACCURACY OR COMPLETENESS OF SCANNED COPIES OF THIS PLAN SHEET.

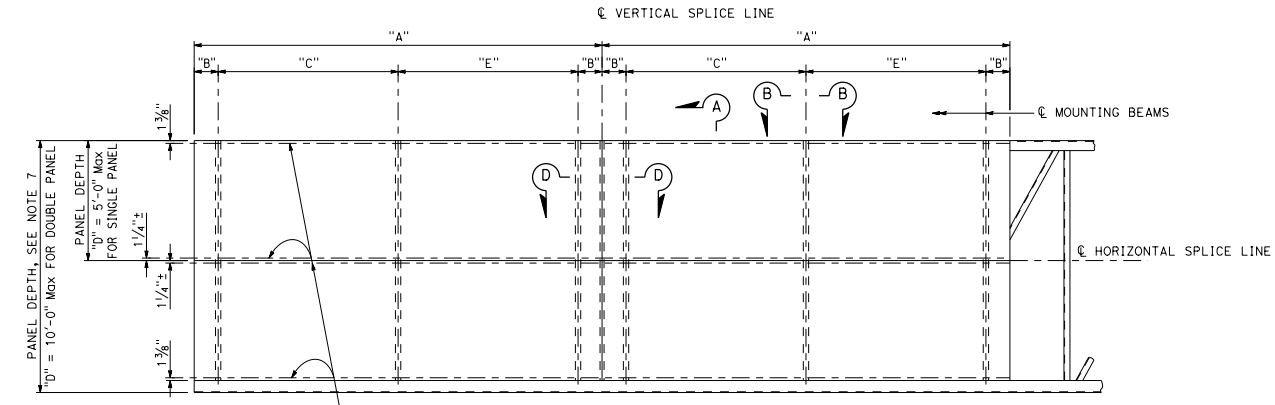

ELEVATION

SIGN PANEL

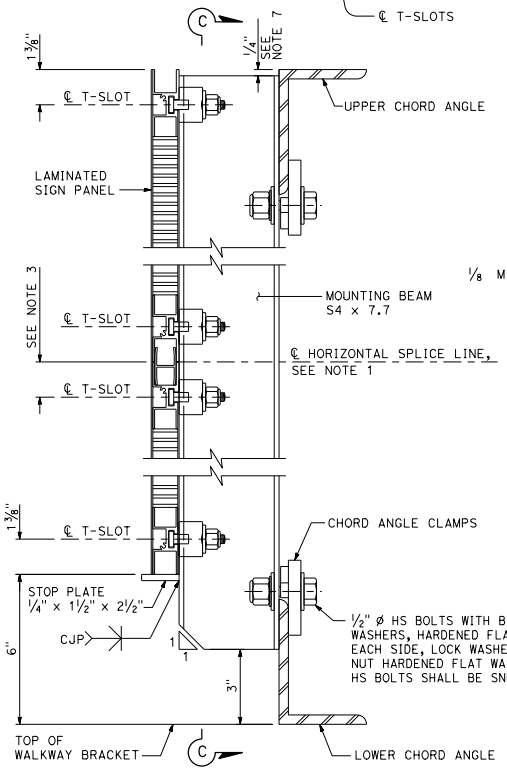

SECTION A-A

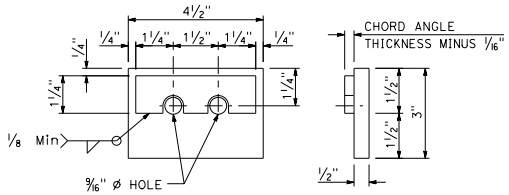

CHORD ANGLE CLAMP

NOTE: May use machined single piece instead of two welded pieces.

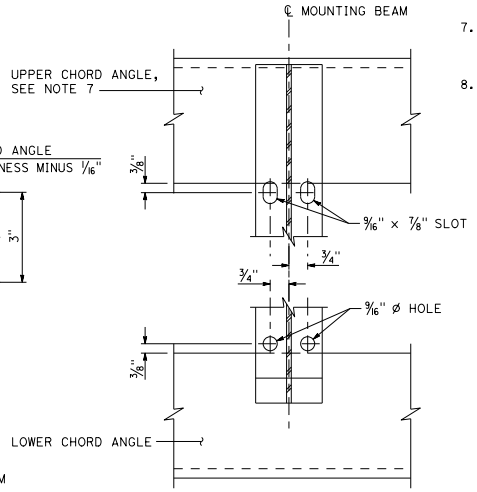

SECTION C-C

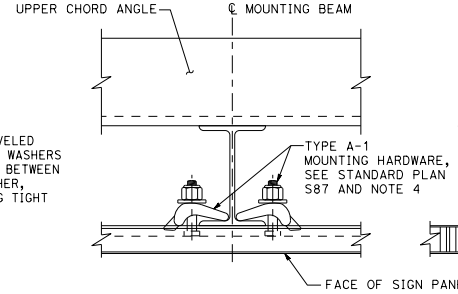

SECTION B-B

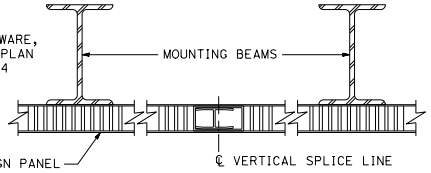

SECTION D-D

NOTES:

1. The location of the horizontal splice line is dependent on the Contractor for signs greater than 60" in depth.
2. Mounting bolts and clamps are required on each side of the horizontal splice lines at each support beam.
3. Dimension varies from panel to panel. Average value approximate 1¼".
4. Torque stainless steel sign panel mounting bolts to 100 inch-pounds.
5. Chord angle clamp to be galvanized after fabrication.
6. The Contractor shall verify all dependent dimensions in the field before ordering or fabricating any material.
7. 9'-2" and 10'-0" sign panel along with the mounting beams will project above the top chord truss member 10" and 1'-8" respectively. Attachment details shall be the same.
8. This sheet applies to truss, tubular, and bridge mounted, but not versatile truss.

MOUNTING BEAM SPACING TABLE

SIGN PANEL LENGTH *	NUMBER MOUNTING BEAMS	SIGN PANEL OVERHANG	MOUNTING BEAM SPACING	
"A"		"B"	"C"	"E"
5'-0"	2	0'-9"	3'-6"	
6'-0"	2	1'-0"	4'-0"	
7'-0"	2	1'-3"	4'-6"	
8'-0"	2	1'-6"	5'-0"	
9'-0"	2	1'-10"	5'-6"	
10'-0"	2	2'-0"	6'-0"	
11'-0"	2	2'-0"	7'-0"	
12'-0"	2	2'-6"	7'-0"	
13'-0"	2	2'-6"	8'-0"	
14'-0"	2	2'-6"	9'-0"	
15'-0"	2	3'-0"	9'-0"	
16'-0"	3	0'-6"	7'-6"	7'-6"
17'-0"	3	1'-0"	7'-6"	7'-6"
18'-0"	3	1'-0"	8'-0"	8'-0"
19'-0"	3	1'-0"	8'-6"	8'-6"
20'-0"	3	1'-6"	8'-6"	8'-6"
21'-0"	3	1'-6"	9'-0"	9'-0"
22'-0"	3	2'-0"	9'-0"	9'-0"
23'-0"	3	2'-6"	9'-0"	9'-0"
24'-0"	3	3'-0"	9'-0"	9'-0"

* Signs longer than 24'-0" are fabricated and mounted as adjoining single panels. The location of the vertical splice line will be determined by the Engineer.

STATE OF CALIFORNIA
DEPARTMENT OF TRANSPORTATION

OVERHEAD SIGNS-TRUSS SIGN MOUNTING DETAILS LAMINATED PANEL (TYPE A)

NO SCALE

S19

2026 STANDARD PLAN S19

7-1-26

Return to Table of Contents

Dist	COUNTY	ROUTE	POST MILES TOTAL PROJECT	SHEET No.	TOTAL SHEETS

REGISTERED CIVIL ENGINEER

September 18, 2026

PLANS APPROVAL DATE

REGISTERED PROFESSIONAL ENGINEER Mahesh Shrestha No. C80133 Exp. 9-30-26 CIVIL STATE OF CALIFORNIA

THE STATE OF CALIFORNIA OR ITS OFFICERS OR AGENTS SHALL NOT BE RESPONSIBLE FOR THE ACCURACY OR COMPLETENESS OF SCANNED COPIES OF THIS PLAN SHEET.

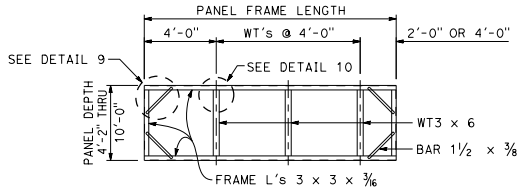

TYPICAL REMOVABLE FRAME

(4'-0" thru 20'-0")

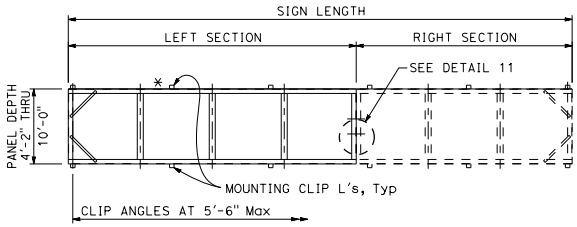

REMOVABLE FRAME GREATER THAN 20'-0"

* 9'-2" and 10'-0" sign panel frames will project above the top chord of the truss. In these cases the top clips shall be bolted to vertical frame members. See Standard Plan S22 for details.

SIGN LENGTH	LEFT SECTION	RIGHT SECTION
22'-0"	12'-0"	10'-0"
24'-0"	12'-0"	12'-0"
26'-0"	12'-0"	14'-0"
28'-0"	16'-0"	12'-0"
30'-0"	16'-0"	14'-0"
32'-0"	16'-0"	16'-0"
34'-0"	16'-0"	18'-0"
36'-0"	20'-0"	16'-0"
38'-0"	20'-0"	18'-0"
40'-0"	20'-0"	20'-0"

NOTES:

Frames for signs greater than 20'-0" in length shall be fabricated in two sections with left section a multiple of 4'-0" in length. See table above.

Sections shall be hoisted into place individually and bolted together as per Detail 11 prior to tightening of mounting clip bolts.

Bolting two sections together and hoisting simultaneously will not be permitted.

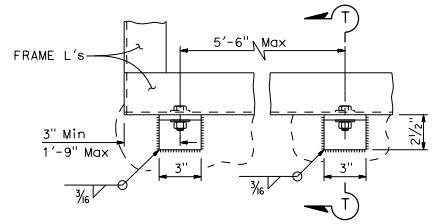

FRAME MOUNTING DETAILS

Details shown apply for sign panel frames ≤ 8'-4" deep. Mounting details for deeper panels shown on Standard Plan S22.

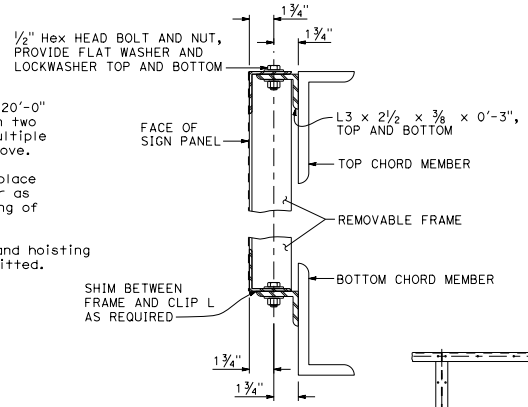

SECTION T-T

NOTES:

1. Frames shall be all-welded construction.
2. Panel mounting holes shall be drilled by template. Sign panel may be considered as a template.
3. Drilled and tapped holes ¼" may be used where interference due to welds or structural members is encountered.
4. WT3 x 6 shall be flush with faces of frame angles.
5. Mounting clip angles shall be located such as to allow the top and bottom frame angles of the removable sign panel to lie on a straight horizontal line.
6. Holes for mounting removable sign panel frame may be slotted 1" maximum parallel to the axis of the sign.
7. WT3 x 6 may be crimped at ends to join frame angles. Fillet weld all around.
8. This sheet applies to truss, tubular, and bridge mounted, but not versatile truss.

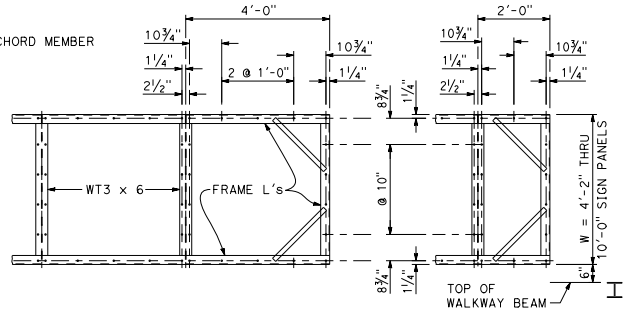

TYPICAL 4'-0" PANEL

TYPICAL 2'-0" PANEL

All holes ½" diameter maximum.

MOUNTING HOLE SPACING SIGN PANEL AND FRAME

Hole spacing is for single sheet sign panels. For Overhead Formed Panels, see Standard S21.

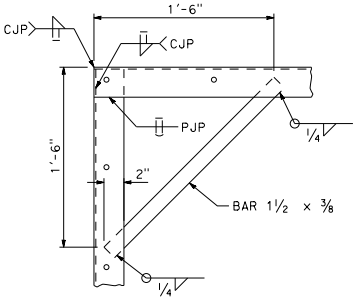

DETAIL 9

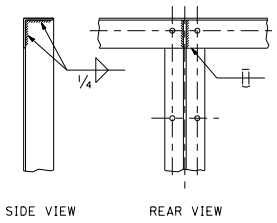

DETAIL 10

TYPICAL FRAME JOINT DETAILS

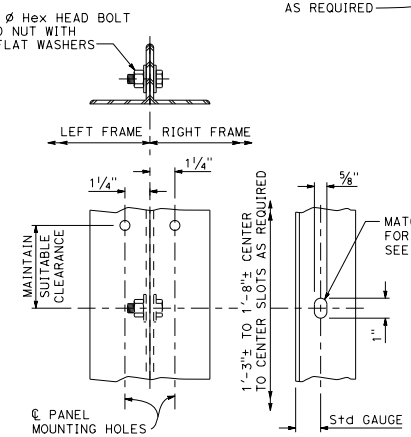

DETAIL 11

FRAME TO FRAME CONNECTION DETAILS

PANEL DEPTH	No. OF SLOTS
4'-2"	2
5'-10"	3
6'-8" AND 7'-6"	4
8'-4" AND 9'-2"	5
10'-0"	6

NOTE:

Panel mounting holes not shown. Panel lengths available in 2'-0" increments.

STATE OF CALIFORNIA
DEPARTMENT OF TRANSPORTATION

OVERHEAD SIGNS STEEL FRAMES REMOVABLE SIGN PANEL FRAME

NO SCALE

S20

2026 STANDARD PLAN S20

7-1-26

Return to Table of Contents

Dist	COUNTY	ROUTE	POST MILES TOTAL PROJECT	SHEET No.	TOTAL SHEETS

REGISTERED CIVIL ENGINEER

September 18, 2026

PLANS APPROVAL DATE

REGISTERED PROFESSIONAL ENGINEER Mahesh Shrestha No. C80133 Exp. 9-30-26 CIVIL STATE OF CALIFORNIA

THE STATE OF CALIFORNIA OR ITS OFFICERS OR AGENTS SHALL NOT BE RESPONSIBLE FOR THE ACCURACY OR COMPLETENESS OF SCANNED COPIES OF THIS PLAN SHEET.

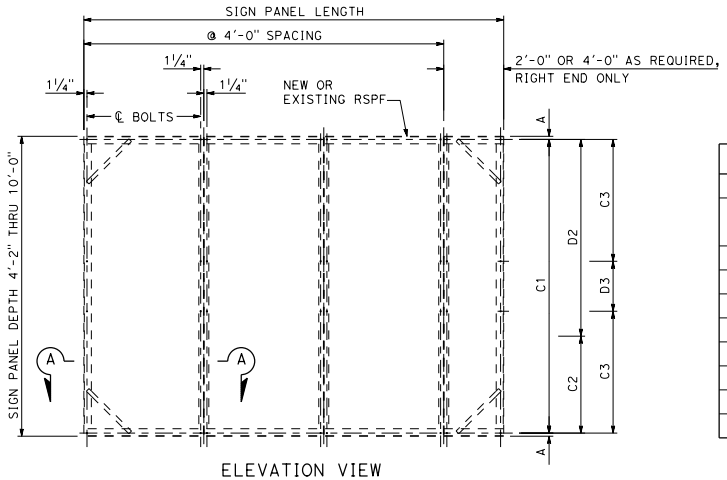

ELEVATION VIEW

NEW OR EXISTING REMOVABLE SIGN PANEL FRAME MOUNTING HOLE SPACING

NOTE:

Sign panel mounting holes ½" ø maximum for ⅜" ø bolts.

TABLE 1

MOUNTING BOLT SPACING

PANEL DEPTH	A	1 SPACE	2 SPACES		3 SPACES		
		C1	C2	D2	C3	D3	C3
50"	1¼"	3'-11½"					
60"	1¼"		2'-4¾"	2'-4¾"			
70"	1¼"		1'-6¾"	4'-¾"			
80"	1¼"		3'-2¾"	3'-2¾"			
90"	1¼"		3'-2¾"	4'-¾"			
100"	1¼"		4'-¾"	4'-¾"			
110"	1¼"				3'-2¾"	2'-6"	3'-2¾"
120"	1¼"				4'-¾"	1'-8"	4'-¾"

NOTES:

1. When constructing a new frame, refer to:
   a. Standard Plan S20 for structural details.
   b. Sign panels shall be considered as a template for drilling holes for mounting bolts.
2. This sheet applies to truss, tubular, and bridge mounted, but not versatile truss.

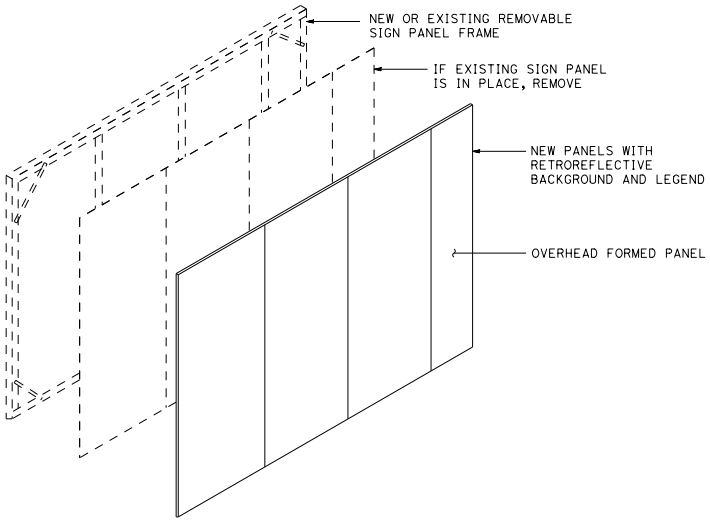

NOTE:

The Contractor shall verify all dependent dimensions in the field before ordering or fabricating any material.

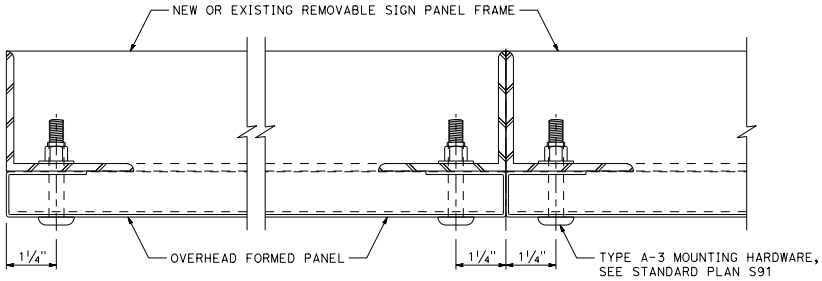

CORNER DETAIL

PANEL CONNECTION

SECTION A-A

STATE OF CALIFORNIA
DEPARTMENT OF TRANSPORTATION

OVERHEAD SIGNS
REMOVABLE SIGN PANEL FRAMES
MOUNTING DETAILS

NO SCALE

S21

2026 STANDARD PLAN S21

7-1-26

Return to Table of Contents

Dist	COUNTY	ROUTE	POST MILES TOTAL PROJECT	SHEET No.	TOTAL SHEETS

REGISTERED CIVIL ENGINEER

September 18, 2026
PLANS APPROVAL DATE

REGISTERED PROFESSIONAL ENGINEER
Mahesh Shrestha
No. C80133
Exp. 9-30-26
CIVIL
STATE OF CALIFORNIA

THE STATE OF CALIFORNIA OR ITS OFFICERS OR AGENTS SHALL NOT BE RESPONSIBLE FOR THE ACCURACY OR COMPLETENESS OF SCANNED COPIES OF THIS PLAN SHEET.

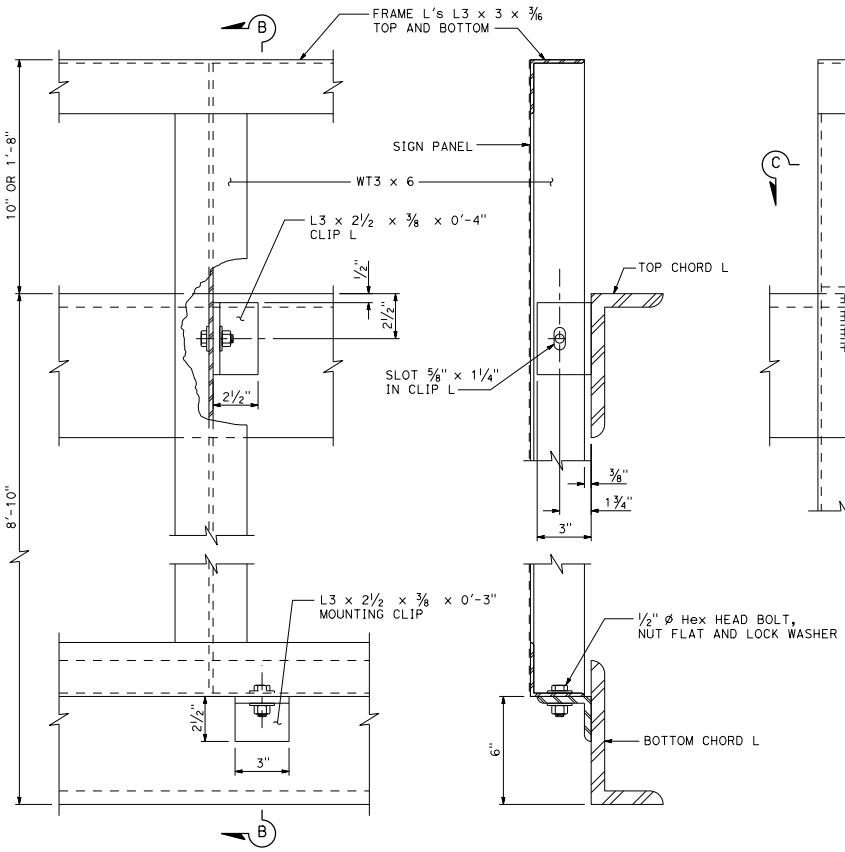

ELEVATION

SECTION B-B

STEEL REMOVABLE SIGN PANEL FRAME

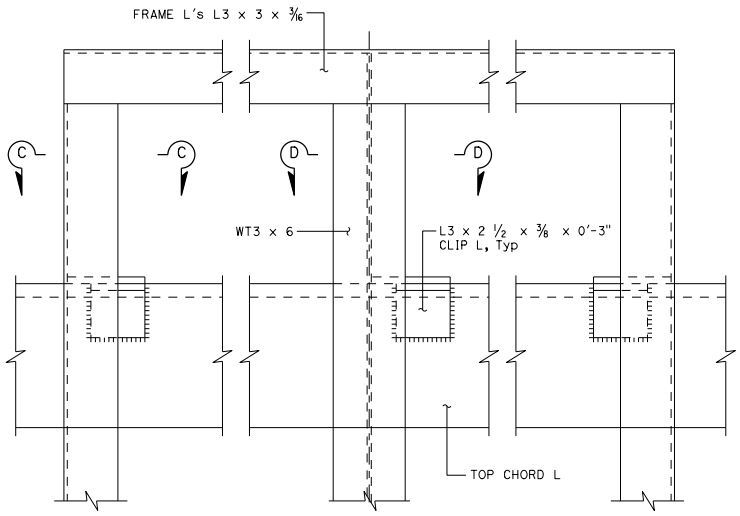

ELEVATION

NOTES:

1. For Steel Removable Sign Panel Frame details, see Standard Plan S20.
2. Minimum fillet weld is 1/4" for clip angles welded to chord member of truss.
3. Maximum spacing of bottom clip angle is 5'-6".
4. Top clips required for each vertical member of Removable Sign Panel Frame.
5. This sheet applies to truss, tubular, and bridge mounted, but not versatile truss.

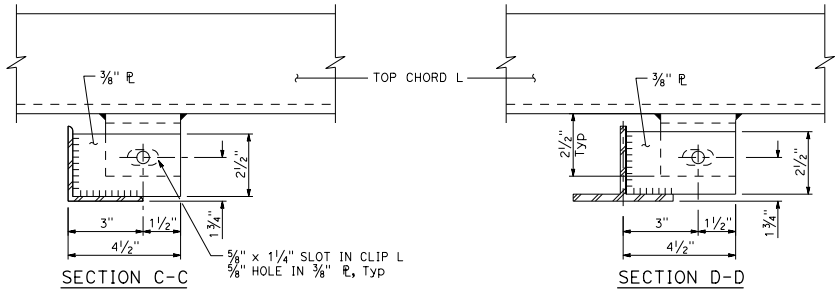

SECTION C-C

SECTION D-D

ALTERNATIVE CONNECTIONS AT TOP CHORD

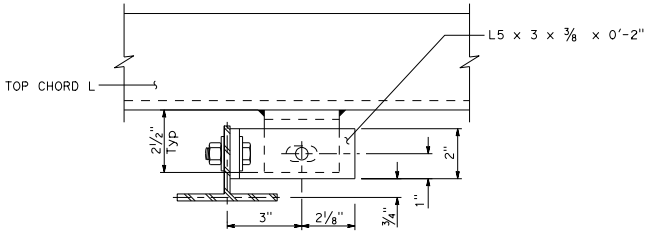

BOLTED ALTERNATIVE CONNECTION AT TOP CHORD

For details not shown, see Sections C-C and D-D.

STATE OF CALIFORNIA
DEPARTMENT OF TRANSPORTATION

OVERHEAD SIGNS-TRUSS
REMOVABLE SIGN PANEL FRAMES
110" AND 120" SIGN PANELS

NO SCALE

S22

2026 STANDARD PLAN S22

7-1-26

Return to Table of Contents

Dist	COUNTY	ROUTE	POST MILES TOTAL PROJECT	SHEET No.	TOTAL SHEETS

REGISTERED CIVIL ENGINEER

September 18, 2026
PLANS APPROVAL DATE

REGISTERED PROFESSIONAL ENGINEER
Mahesh Shrestha
No. C80133
Exp. 9-30-26
CIVIL
STATE OF CALIFORNIA

THE STATE OF CALIFORNIA OR ITS OFFICERS OR AGENTS SHALL NOT BE RESPONSIBLE FOR THE ACCURACY OR COMPLETENESS OF SCANNED COPIES OF THIS PLAN SHEET.

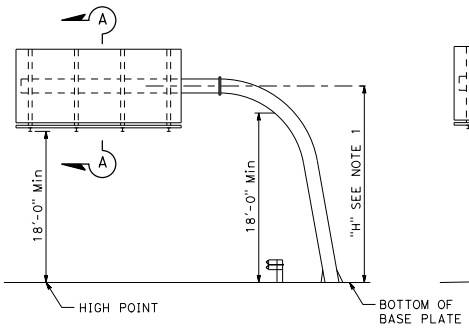

SLANTED SINGLE POST TYPE

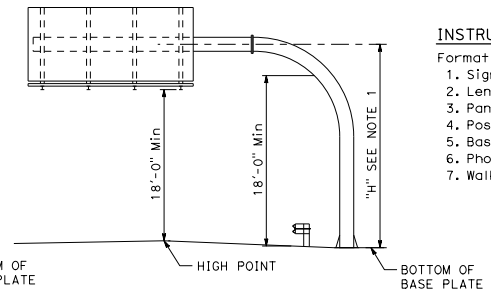

VERTICAL SINGLE POST TYPE

INSTRUCTIONS TO FABRICATOR

Format sheet shows:
1. Sign structure location.
2. Length of structure span.
3. Panel size and location on structure.
4. Post height to bottom of panel or mast arm elevation.
5. Base plate elevation.
6. Photoelectric unit location if required.
7. Walkway location.

NOTES:

1. Maximum post height = 24'-0" + sign panel depth/2.
2. For walkway details, see Standard Plan S16.
3. For safety railing and cable details, see Standard Plans S17 and S18.

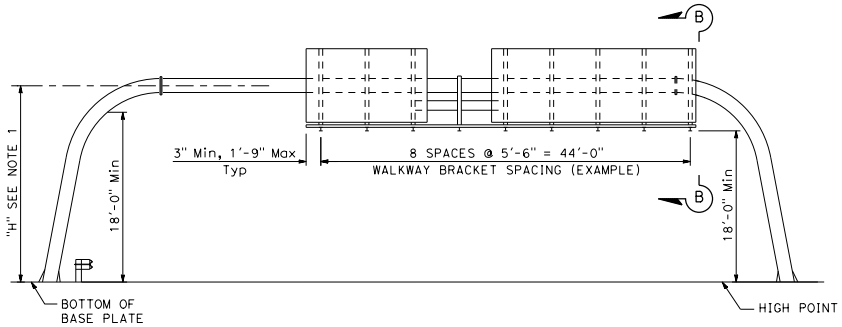

SLANTED TWO POST TYPE

WALKWAY BRACKETS:

Maintain uniform spacing where possible. Maximum spacing shall not exceed 5'-6". Minimum clear to field splice = 1'-0"±.

WALKWAY AND SAFETY RAILING:

Walkway to extend full length of sign area and be continuous between signs. Extend walkway to edge of pavement if required. Safety railing to protect entire walkway.

PHOTOELECTRIC UNIT:

Place behind sign panel nearest right shoulder unless otherwise shown on format sheet.

GENERAL NOTES:

LOADING:
WIND LOADING:
Normal to face of sign: 40.3 psf on 100% panel coverage.
Transverse to face of sign: 20% of normal force.
WALKWAY LOADING:
Dead load 500 LBS concentrated live load.

UNIT STRESSES:
STRUCTURAL STEEL: fy = 36,000 psi
REINFORCED CONCRETE: fy = 60,000 psi
f'c = 3600 psi
FOOTING SOIL PRESSURE: 2.5 ksf (spread footing)

MINIMUM CLEARANCE
Vertical roadway clearance 18'-0" above roadway and shoulders.

WELDING:
All welding continuous unless otherwise noted on the plans.

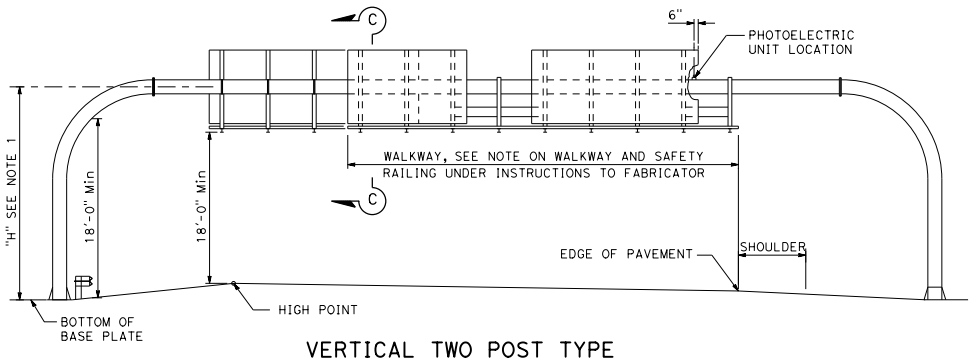

VERTICAL TWO POST TYPE

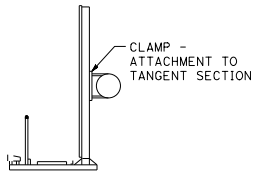

SECTION A-A

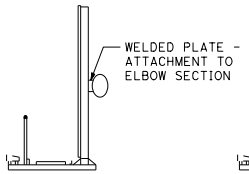

SECTION B-B

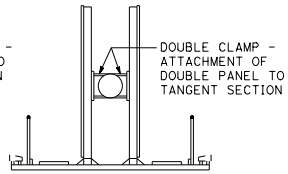

SECTION C-C

STATE OF CALIFORNIA
DEPARTMENT OF TRANSPORTATION

OVERHEAD SIGNS-TUBULAR INSTRUCTIONS AND EXAMPLES

NO SCALE

S30

2026 STANDARD PLAN S30

7-1-26

Return to Table of Contents

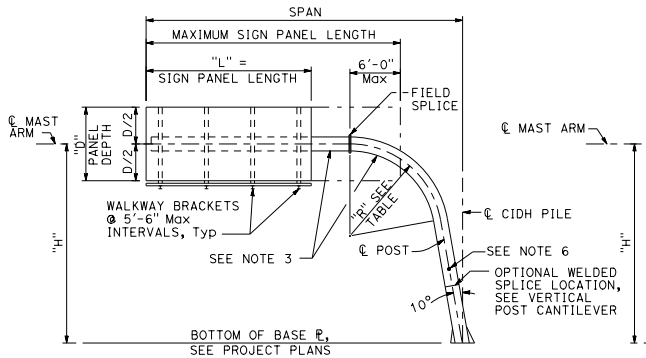

SLANTED POST CANTILEVER

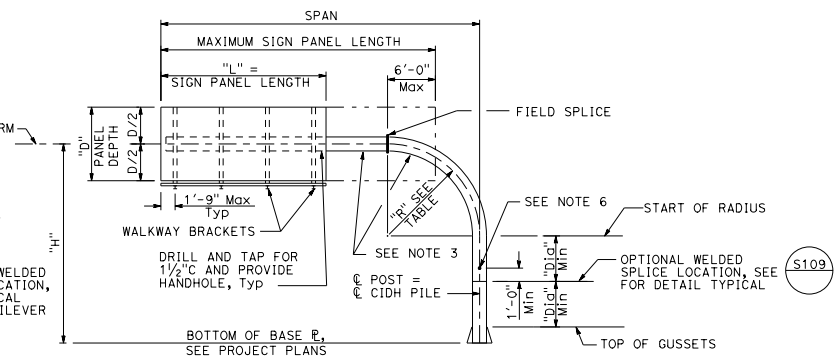

VERTICAL POST CANTILEVER

Dist	COUNTY	ROUTE	POST MILES TOTAL PROJECT	SHEET No.	TOTAL SHEETS

REGISTERED CIVIL ENGINEER

September 18, 2026

PLANS APPROVAL DATE

REGISTERED PROFESSIONAL ENGINEER
Mahesh Shrestha
No. C80133
Exp. 9-30-26
CIVIL
STATE OF CALIFORNIA

THE STATE OF CALIFORNIA OR ITS OFFICERS OR AGENTS SHALL NOT BE RESPONSIBLE FOR THE ACCURACY OR COMPLETENESS OF SCANNED COPIES OF THIS PLAN SHEET.

POST TYPE No. FOR SPANS OF CANTILEVER

"D" PANEL DEPTH	"H" POST HEIGHT	38'-0" SPAN Col #	37'-0" SPAN Col #	36'-0" SPAN Col #	35'-0" SPAN Col #	34'-0" SPAN Col #	33'-0" SPAN Col #	32'-0" SPAN Col #	31'-0" SPAN Col #	30'-0" SPAN Col #	29'-0" SPAN Col #	28'-0" SPAN Col #	27'-0" SPAN Col #	26'-0" SPAN Col #	25'-0" SPAN Col #	24'-0" SPAN Col #	23'-0" SPAN Col #	22'-0" SPAN Col #	21'-0" SPAN Col #	20'-0" SPAN Col #
120"	29'-0"	VI	V	V	V	V	V	V	V	IV	IV	IV	IV	IV	III	III	III	III	II	II
	27'-0"	V	V	V	V	V	IV	IV	IV	IV	IV	IV	IV	III	III	III	III	II	II	II
	25'-0"	V	V	V	V	IV	IV	IV	IV	IV	IV	IV	III	III	III	III	II	II	II	II
	23'-0"	V	V	V	IV	IV	IV	IV	IV	IV	IV	III	III	III	III	II	II	II	II	II
	21'-0"	V	V	IV	IV	IV	IV	IV	IV	III	III	III	III	III	II	II	II	II	II	II
110"	29'-0"	V	V	V	V	V	IV	IV	IV	IV	IV	IV	IV	III	III	III	III	II	II	II
	27'-0"	V	V	V	IV	IV	IV	IV	IV	IV	IV	IV	III	III	III	III	II	II	II	II
	25'-0"	V	V	IV	IV	IV	IV	IV	IV	IV	IV	III	III	III	III	II	II	II	II	II
	23'-0"	V	IV	IV	IV	IV	IV	IV	IV	III	III	III	III	III	II	II	II	II	II	II
	21'-0"	IV	IV	IV	IV	IV	IV	IV	III	III	III	III	II	II	II	II	II	II	II	I
100"	29'-0"	V	V	V	V	V	IV	IV	IV	IV	IV	III	III	III	III	II	II	II	II	II
	27'-0"	V	V	IV	IV	IV	IV	IV	IV	IV	III	III	III	III	II	II	II	II	II	II
	25'-0"	IV	IV	IV	IV	IV	IV	IV	IV	III	III	III	III	III	II	II	II	II	II	II
	23'-0"	IV	IV	IV	IV	IV	IV	IV	III	III	III	III	II	II	II	II	II	II	II	I
	21'-0"	IV	IV	IV	IV	IV	IV	III	III	III	III	II	II	II	II	II	II	II	I	I
90"	29'-0"	V	V	V	V	IV	IV	IV	IV	IV	III	III	III	III	II	II	II	II	II	II
	27'-0"	IV	IV	IV	IV	IV	IV	IV	IV	III	III	III	III	II	II	II	II	II	II	II
	25'-0"	IV	IV	IV	IV	IV	IV	IV	III	III	III	III	II	II	II	II	II	II	II	I
	23'-0"	IV	IV	IV	IV	IV	IV	III	III	III	III	II	II	II	II	II	II	II	I	I
	21'-0"	IV	IV	IV	IV	IV	III	III	III	III	II	II	II	II	II	II	I	I	I	I
80"	29'-0"	IV	IV	IV	IV	IV	IV	IV	III	III	III	III	III	II	II	II	II	II	II	I
	27'-0"	IV	IV	IV	IV	IV	IV	III	III	III	III	III	II	II	II	II	II	II	I	I
	25'-0"	IV	IV	IV	IV	IV	III	III	III	III	III	II	II	II	II	II	II	I	I	I
	23'-0"	IV	IV	IV	IV	III	III	III	III	III	II	II	II	II	II	II	II	I	I	I
	21'-0"	IV	IV	IV	IV	III	III	III	III	II	II	II	II	II	II	II	I	I	I	I
70"	29'-0"	IV	IV	IV	IV	IV	III	III	III	III	III	II	II	II	II	II	II	II	I	I
	27'-0"	IV	IV	IV	IV	IV	III	III	III	III	II	II	II	II	II	II	II	I	I	I
	25'-0"	IV	IV	IV	IV	III	III	III	III	III	II	II	II	II	II	II	I	I	I	I
	23'-0"	IV	IV	IV	III	III	III	III	II	II	II	II	II	II	II	I	I	I	I	I
	21'-0"	IV	IV	III	III	III	III	II	II	II	II	II	II	II	I	I	I	I	I	I
60"	29'-0"	IV	IV	IV	IV	III	III	III	III	II	II	II	II	II	II	II	I	I	I	I
	27'-0"	IV	IV	IV	IV	III	III	III	II	II	II	II	II	II	II	I	I	I	I	I
	25'-0"	IV	IV	III	III	III	III	II	II	II	II	II	II	II	I	I	I	I	I	I
	23'-0"	IV	III	III	III	III	III	II	II	II	II	II	II	II	I	I	I	I	I	I
	21'-0"	III	III	III	III	III	II	II	II	II	II	II	II	I	I	I	I	I	I	I
50"	29'-0"	IV	III	III	III	III	III	II	II	II	II	II	II	II	I	I	I	I	I	I
	27'-0"	IV	III	III	III	III	II	II	II	II	II	II	II	I	I	I	I	I	I	I
	25'-0"	III	III	III	III	III	II	II	II	II	II	II	II	I	I	I	I	I	I	I
	23'-0"	III	III	III	II	II	II	II	II	II	II	II	I	I	I	I	I	I	I	I
	21'-0"	III	III	II	II	II	II	II	II	II	II	I	I	I	I	I	I	I	I	I

NOTES:

1. The maximum sign panel overlap onto the post elbow shall not exceed 6'-0" from the field splice.
2. When several sign panels are to be installed with a space between the panels, the space shall be as small as possible and 2'-0" maximum.
3. All posts between base plate and field splice shall be as scheduled in table. All mast arms are standard pipe.
4. During sign erection the post shall be raked as necessary with the use of leveling nuts to level the sign panel.
5. At final position of post all top and bottom anchor bolt nuts shall be snug tighten against base plate.
6. Drill and tap for 1½"C chase nipple and plug with recessed pipe plugs. Place perpendicular to sign panel axis and away from approaching traffic. See Standard Plan ES-15C.

ABBREVIATION:

"Dia" = POST OUTSIDE DIAMETER

POST TYPE No.	PIPE		"R" RADIUS
	NPS	THICKNESS	
I	20	½"	12'-0"
II	24	½"	12'-0"
III	24	⅝"	12'-0"
IV	30	½"	12'-0"
V	30	⅝"	12'-0"
VI	30	¾"	12'-0"

STATE OF CALIFORNIA
DEPARTMENT OF TRANSPORTATION

OVERHEAD SIGNS-TUBULAR SINGLE POST TYPE LAYOUT AND PIPE SELECTION

NO SCALE

S31

2026 STANDARD PLAN S31

7-1-26

Return to Table of Contents

Dist	COUNTY	ROUTE	POST MILES TOTAL PROJECT	SHEET No.	TOTAL SHEETS

REGISTERED CIVIL ENGINEER

September 18, 2026

PLANS APPROVAL DATE

REGISTERED PROFESSIONAL ENGINEER Mahesh Shrestha No. C80133 Exp. 9-30-26 CIVIL STATE OF CALIFORNIA

THE STATE OF CALIFORNIA OR ITS OFFICERS OR AGENTS SHALL NOT BE RESPONSIBLE FOR THE ACCURACY OR COMPLETENESS OF SCANNED COPIES OF THIS PLAN SHEET.

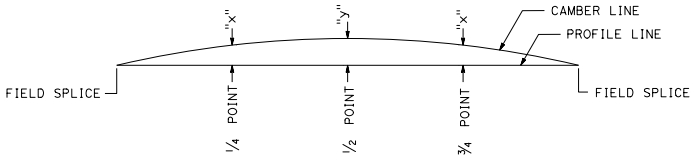

CAMBER DIAGRAM

ABBREVIATION:

R = Radius of 90° elbow

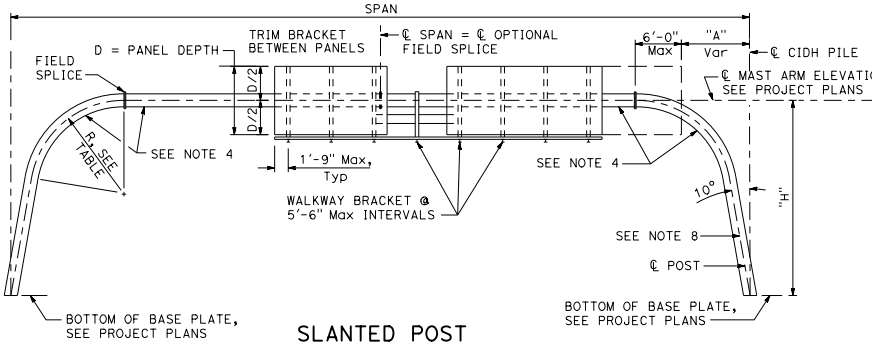

SLANTED POST

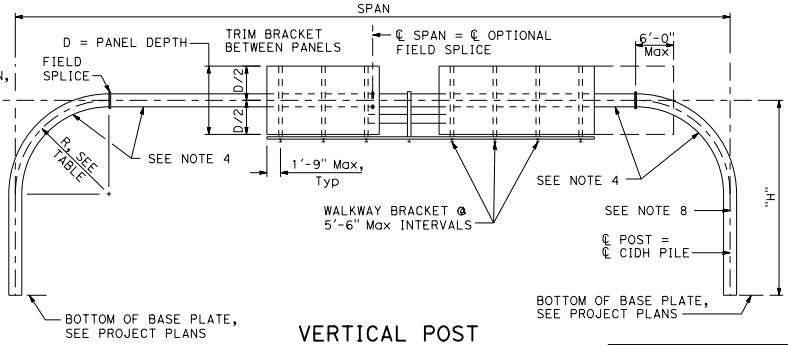

VERTICAL POST

TABLE A

"D" PANEL DEPTH	"H" POST HEIGHT	POST TYPE No. FOR SPAN LENGTH BELOW									
		140'-0" TO 145'-0"	130'-0" TO 139'-0"	120'-0" TO 129'-0"	110'-0" TO 119'-0"	100'-0" TO 109'-0"	90'-0" TO 99'-0"	80'-0" TO 89'-0"	70'-0" TO 79'-0"	60'-0" TO 69'-0"	50'-0" TO 59'-0"
120"	29'-0"	VI	VI	VI	VI	V	V	IV	III	III	II
	27'-0"	VI	VI	VI	V	V	IV	IV	III	II	II
	25'-0"	VI	VI	V	V	IV	IV	III	III	II	II
	23'-0"	VI	V	V	IV	IV	IV	III	II	II	I
	21'-0"	V	V	IV	IV	IV	III	III	II	II	I
110"	29'-0"	VI	VI	VI	V	V	IV	IV	III	II	II
	27'-0"	VI	VI	V	V	IV	IV	III	III	II	II
	25'-0"	V	V	V	IV	IV	IV	III	II	II	I
	23'-0"	V	V	IV	IV	IV	III	III	II	II	I
	21'-0"	V	V	IV	IV	III	III	II	II	II	I
100"	29'-0"	VI	V	V	V	IV	IV	III	III	II	II
	27'-0"	V	V	V	IV	IV	IV	III	II	II	I
	25'-0"	V	V	IV	IV	IV	III	III	II	II	I
	23'-0"	V	IV	IV	IV	III	III	II	II	II	I
	21'-0"	V	IV	IV	III	III	II	II	II	I	I
90"	29'-0"	V	V	V	IV	IV	III	III	II	II	I
	27'-0"	V	V	IV	IV	IV	III	II	II	II	I
	25'-0"	IV	IV	IV	IV	III	III	II	II	I	I
	23'-0"	IV	IV	IV	III	III	II	II	II	I	I
	21'-0"	IV	IV	III	III	II	II	II	I	I	I
80"	29'-0"	V	IV	IV	IV	III	III	II	II	II	I
	27'-0"	IV	IV	IV	III	III	II	II	II	I	I
	25'-0"	IV	IV	IV	III	III	II	II	II	I	I
	23'-0"	IV	IV	III	III	II	II	II	I	I	I
	21'-0"	IV	III	III	II	II	II	I	I	I	I
70"	29'-0"	IV	IV	IV	III	III	II	II	II	I	I
	27'-0"	IV	IV	III	III	II	II	II	I	I	I
	25'-0"	III	III	III	II	II	II	II	I	I	I
	23'-0"	III	III	II	II	II	II	I	I	I	I
	21'-0"	III	III	II	II	II	I	I	I	I	I

NOTES:

1. The maximum sign panel overlap onto elbow shall not exceed 6'-0" from the field splice.
2. When several sign panels are to be installed with spaces between panels, the total sign panel length is the sum of individual sign panel lengths only.
3. For spans ranging from 50'-0" to 145'-0", maximum sign panel coverage is as follows:
   a) For slanted post type: Span - "A" on both sides from ℄ of CIDH Pile.
   b) For vertical post type: Span - 6'-0" on both sides from ℄ of CIDH Pile.
4. All posts between base plate and field plate splice shall be as scheduled in table. All mast arms are standard pipe.
5. Before any portion of sign frame is assembled in its final position, the Contractor shall demonstrate to the Engineer by preassembly or other approved methods that the span length of the frame, with no load condition, is within ±1/2" of field measured span length between foundations.
6. If sign frames are erected as one unit, they shall be adequately suspended to avoid distortions or changes in span lengths between base plates.
7. At final position of post, all top and bottom anchor bolt nuts shall be snug tighten against base plate.
8. Drill and tap for 1 1/2"C chase nipple and plug with recessed pipe plugs. Place perpendicular to sign panel axis and away from approaching traffic. See Standard Plan ES-15C.
9. Maximum difference between post heights on an individual frame = 5'-0".
10. For standard pipe members (mast arms) with lengths greater than 78'-9", an optional field splice will be permitted at the centerline of span to facilitate hauling operations.
11. For location of optional welded splice in post, see Standard Plan S31.

TABLE B

POST TYPE No.	PIPE		R RADIUS
	NPS	THICKNESS	
I	20	1/2"	12'-0"
II	24	1/2"	12'-0"
III	24	5/8"	12'-0"
IV	30	1/2"	12'-0"
V	30	5/8"	12'-0"
VI	30	3/4"	12'-0"

TABLE C

CAMBER			
POST TYPE No.	SPAN LENGTH	X	Y
II	50'-0" TO 119'-0"	2 1/4"	3 1/2"
II	120'-0" TO 145'-0"	3 3/4"	5"
III	50'-0" TO 119'-0"	2 1/4"	3 1/2"
III	120'-0" TO 145'-0"	3 3/4"	5"
IV	50'-0" TO 119'-0"	2 1/4"	3 1/2"
IV	120'-0" TO 145'-0"	3 3/4"	5"
V	50'-0" TO 119'-0"	2 1/4"	3 1/2"
V	120'-0" TO 145'-0"	3 3/4"	5"
VI	50'-0" TO 119'-0"	2 1/4"	3 1/2"
VI	120'-0" TO 145'-0"	3 3/4"	5"

STATE OF CALIFORNIA
DEPARTMENT OF TRANSPORTATION

OVERHEAD SIGNS-TUBULAR TWO POST TYPE LAYOUT AND PIPE SELECTION

NO SCALE

S32

2026 STANDARD PLAN S32

7-1-26

Return to Table of Contents

Dist	COUNTY	ROUTE	POST MILES TOTAL PROJECT	SHEET No.	TOTAL SHEETS

REGISTERED CIVIL ENGINEER

September 18, 2026

PLANS APPROVAL DATE

Mahesh Shrestha No. C80133 Exp. 9-30-26 CIVIL STATE OF CALIFORNIA REGISTERED PROFESSIONAL ENGINEER

THE STATE OF CALIFORNIA OR ITS OFFICERS OR AGENTS SHALL NOT BE RESPONSIBLE FOR THE ACCURACY OR COMPLETENESS OF SCANNED COPIES OF THIS PLAN SHEET.

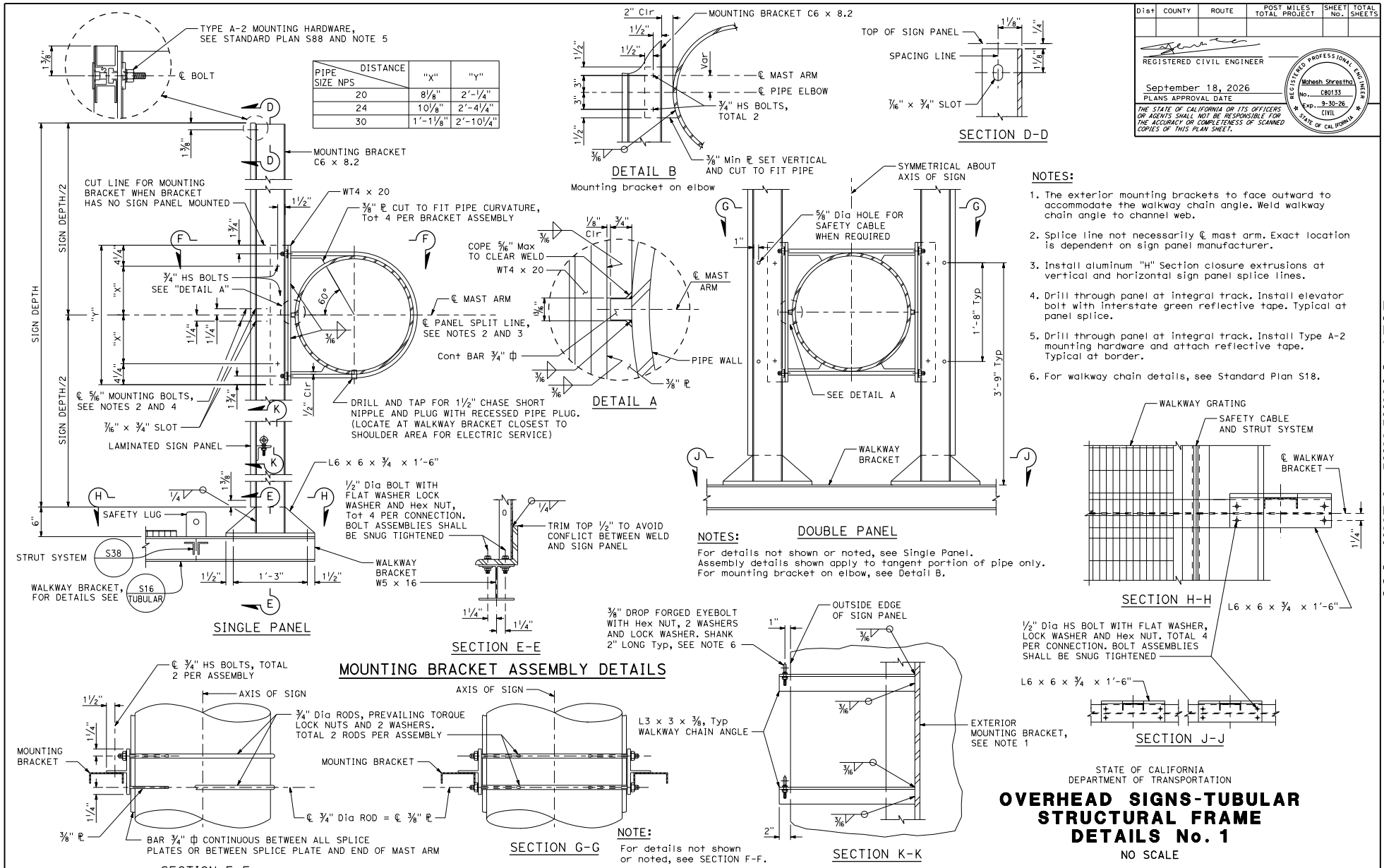

PIPE SIZE NPS \ DISTANCE	"X"	"Y"
20	8 1/8"	2'-1/4"
24	10 1/8"	2'-4 1/4"
30	1'-1 1/8"	2'-10 1/4"

NOTES:

1. The exterior mounting brackets to face outward to accommodate the walkway chain angle. Weld walkway chain angle to channel web.
2. Splice line not necessarily ℄ mast arm. Exact location is dependent on sign panel manufacturer.
3. Install aluminum "H" Section closure extrusions at vertical and horizontal sign panel splice lines.
4. Drill through panel at integral track. Install elevator bolt with interstate green reflective tape. Typical at panel splice.
5. Drill through panel at integral track. Install Type A-2 mounting hardware and attach reflective tape. Typical at border.
6. For walkway chain details, see Standard Plan S18.

NOTES:

For details not shown or noted, see Single Panel.
Assembly details shown apply to tangent portion of pipe only.
For mounting bracket on elbow, see Detail B.

NOTE:

For details not shown or noted, see SECTION F-F.

STATE OF CALIFORNIA
DEPARTMENT OF TRANSPORTATION

OVERHEAD SIGNS-TUBULAR STRUCTURAL FRAME DETAILS No. 1

NO SCALE

S33

7-1-26

Return to Table of Contents

Dist	COUNTY	ROUTE	POST MILES TOTAL PROJECT	SHEET No.	TOTAL SHEETS

REGISTERED CIVIL ENGINEER

September 18, 2026
PLANS APPROVAL DATE

REGISTERED PROFESSIONAL ENGINEER
Mahesh Shrestha
No. C80133
Exp. 9-30-26
CIVIL
STATE OF CALIFORNIA

THE STATE OF CALIFORNIA OR ITS OFFICERS OR AGENTS SHALL NOT BE RESPONSIBLE FOR THE ACCURACY OR COMPLETENESS OF SCANNED COPIES OF THIS PLAN SHEET.

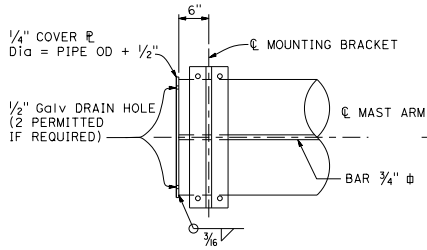

MAST ARM END DETAIL

For Single Post Type only.

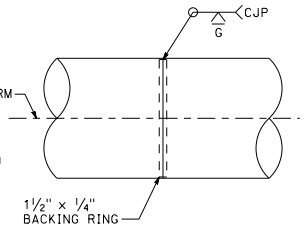

SHOP SPLICE

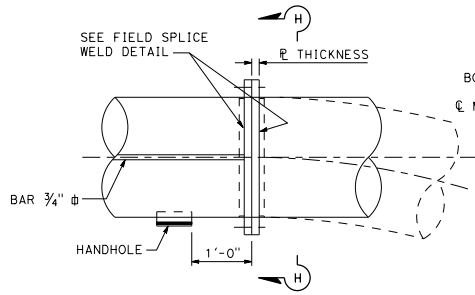

FIELD SPLICE

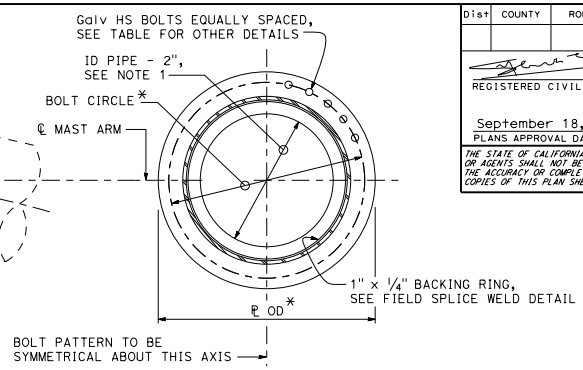

SECTION H-H

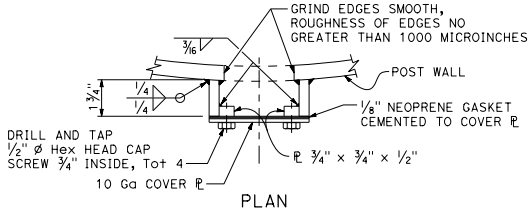

PLAN

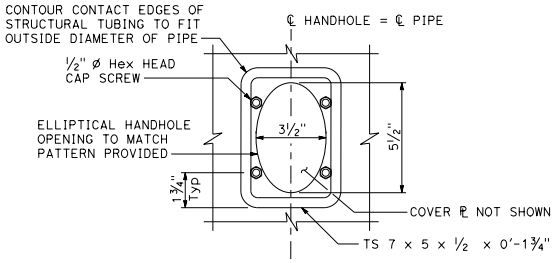

ELEVATION

DETAILS OF LOWER HANDHOLE AND COVER

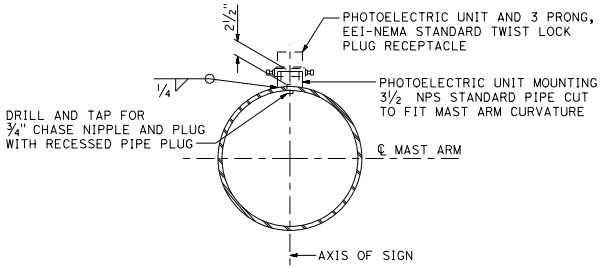

PHOTOELECTRIC UNIT DETAILS

See Layout sheet for location when required.

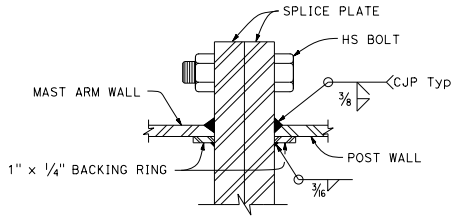

FIELD SPLICE WELD DETAIL

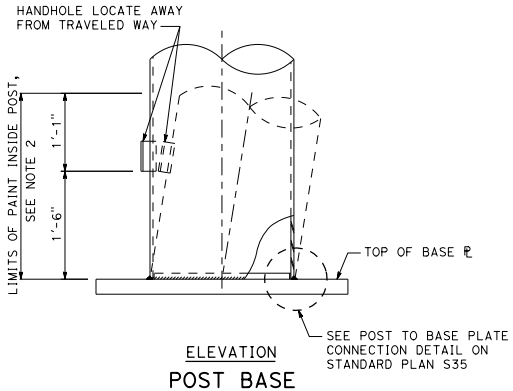

ELEVATION

POST BASE

For base ℙ details, see Standard Plan S35.

NOTES:

1. Place single thin bead of silicone caulking compound around hole before bolting. Caulking not to interfere with friction between plates in bolted area.
2. Prime and paint post interior from base ℙ to 6" above lower handhole unless post is galvanized.
3. Field splice diameters marked "*" may be increased 2" to facilitate bolting.

ABBREVIATION:

ID - Inside Diameter of Post Pipe

FIELD SPLICE TABLE

PIPE SIZE (NPS)	ℙ OD *	ℙ THICKNESS	BOLT CIRCLE Dia *	No. OF HS BOLTS AND BOLT Dia
20	2'-3"	1 3/8"	2'-0"	22 - 1"
24	2'-7"	1 1/2"	2'-4"	26 - 1"
30	3'-1"	1 5/8"	2'-10"	34 - 1"

NOTE:

Design based on capacity of standard pipe.

STATE OF CALIFORNIA
DEPARTMENT OF TRANSPORTATION

OVERHEAD SIGNS-TUBULAR STRUCTURAL FRAME DETAILS No. 2

NO SCALE

S34

2026 STANDARD PLAN S34

7-1-26

Return to Table of Contents

Dist	COUNTY	ROUTE	POST MILES TOTAL PROJECT	SHEET No.	TOTAL SHEETS

REGISTERED CIVIL ENGINEER

September 18, 2026
PLANS APPROVAL DATE

REGISTERED PROFESSIONAL ENGINEER
Mahesh Shrestha
No. C80133
Exp. 9-30-26
CIVIL
STATE OF CALIFORNIA

THE STATE OF CALIFORNIA OR ITS OFFICERS OR AGENTS SHALL NOT BE RESPONSIBLE FOR THE ACCURACY OR COMPLETENESS OF SCANNED COPIES OF THIS PLAN SHEET.

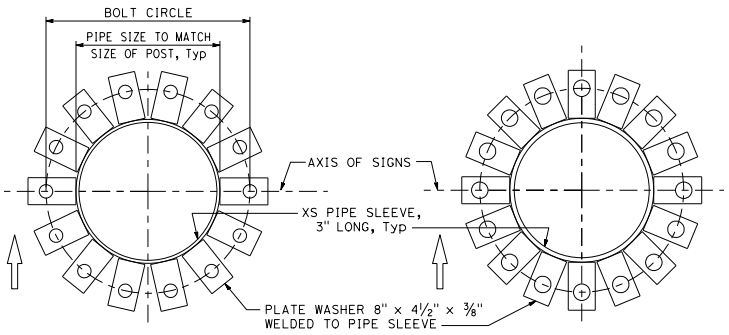

14 BOLTS 16 BOLTS

ANCHOR BOLT TEMPLATE

Template to match base plate anchor bolt pattern (Option: Template similar to ring plate type can be used in lieu of plate washer type).

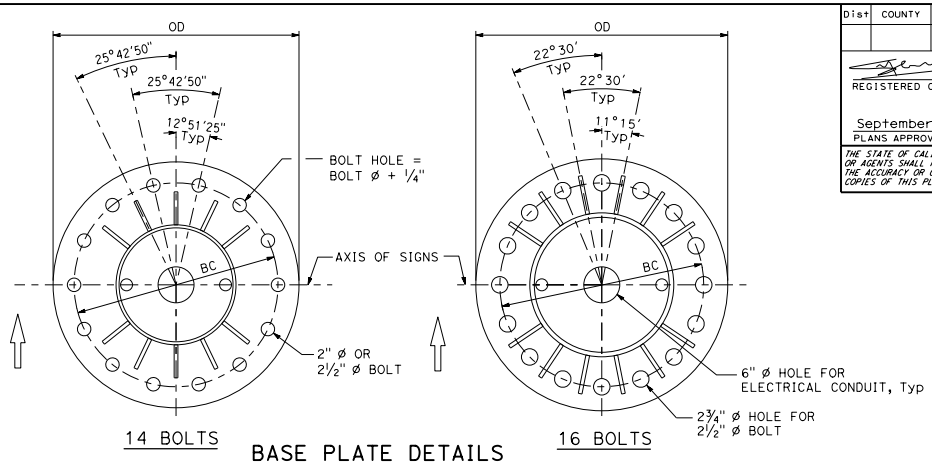

14 BOLTS 16 BOLTS

BASE PLATE DETAILS SINGLE AND TWO POST TYPE

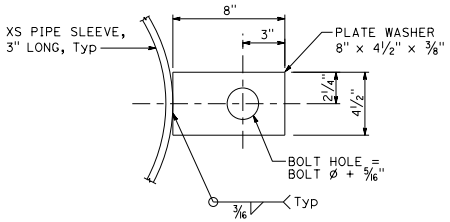

PLATE WASHER DETAIL FOR 14 AND 16 BOLT TEMPLATE PATTERN

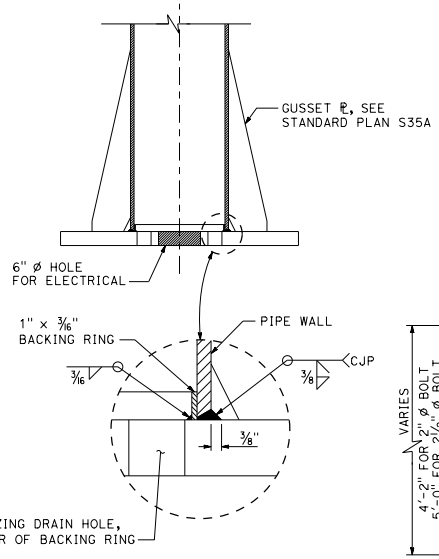

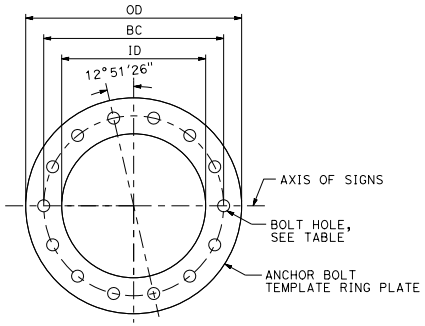

14 BOLT
Type I shown

SINGLE POST AND TWO POST TUBULAR					
POST TYPE	PIPE		BASE ℙ OD AND THICKNESS	ANCHOR BOLTS	
	NPS	THICKNESS		BOLT CIRCLE Dia	BOLT TOTALS AND BOLT Dia
I	20	½"	3'-1" x 2½"	2'-6"	14 - 2"
II	24	½"	3'-6" x 2½"	2'-10"	14 - 2½"
III	24	⅝"	3'-6" x 2½"	2'-10"	14 - 2½"
IV	30	½"	4'-0" x 2½"	3'-4"	16 - 2½"
V	30	⅝"	4'-0" x 2½"	3'-4"	16 - 2½"
VI	30	¾"	4'-0" x 3"	3'-4"	16 - 2½"

RING DIMENSIONS			
TYPE DIMENSIONS	POST TYPE No.		
	I	II TO III	IV TO VI
OD	2'-9"	3'-2"	3'-10"
ID	2'-3"	2'-6"	2'-10"
BC	2'-6"	2'-10"	3'-4"
HOLE Dia	2⅛" Max	2⅝" Max	2⅝" Max
PERMANENT TEMPLATE THICKNESS	⅝"	¾"	¾"
TEMPORARY TEMPLATE THICKNESS	½"	½"	½"

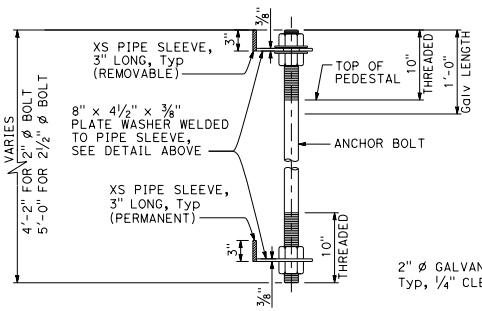

ANCHOR BOLT TEMPLATE ASSEMBLY PLATE WASHER TYPE

NOTE:
One bolt shown only. Other bolts same configuration around pipe sleeve.

POST TO BASE PLATE CONNECTION DETAIL

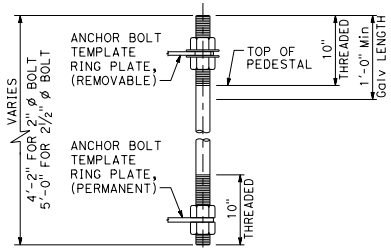

ANCHOR BOLT TEMPLATE RING PLATE TYPE

NOTE:
One bolt shown only. Other bolts same configuration around ring plate.

STATE OF CALIFORNIA
DEPARTMENT OF TRANSPORTATION

OVERHEAD SIGNS-TUBULAR SINGLE POST AND TWO POST TYPE BASE PLATE AND ANCHORAGE DETAILS

NO SCALE

S35

7-1-26

2026 STANDARD PLAN S35

Return to Table of Contents

Dist	COUNTY	ROUTE	POST MILES TOTAL PROJECT	SHEET No.	TOTAL SHEETS

REGISTERED CIVIL ENGINEER

September 18, 2026

PLANS APPROVAL DATE

REGISTERED PROFESSIONAL ENGINEER Mahesh Shrestha No. C80133 Exp. 9-30-26 CIVIL STATE OF CALIFORNIA

THE STATE OF CALIFORNIA OR ITS OFFICERS OR AGENTS SHALL NOT BE RESPONSIBLE FOR THE ACCURACY OR COMPLETENESS OF SCANNED COPIES OF THIS PLAN SHEET.

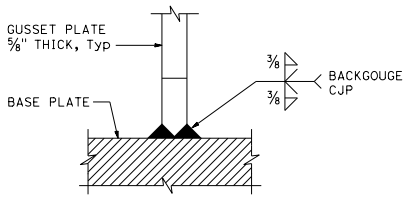

SECTION A-A

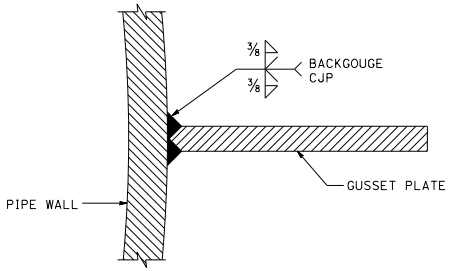

SECTION B-B

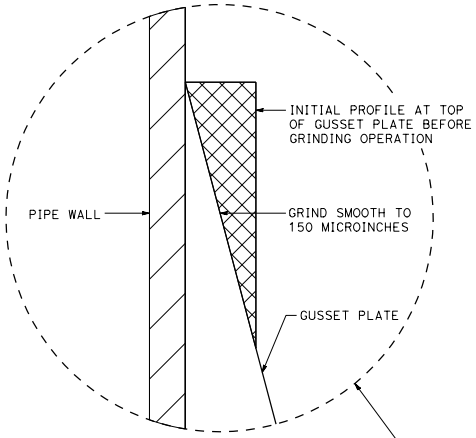

DETAIL G

NOTES:

1. All gussets to be same height.
2. Provide a smooth transition from gusset plate to tube.

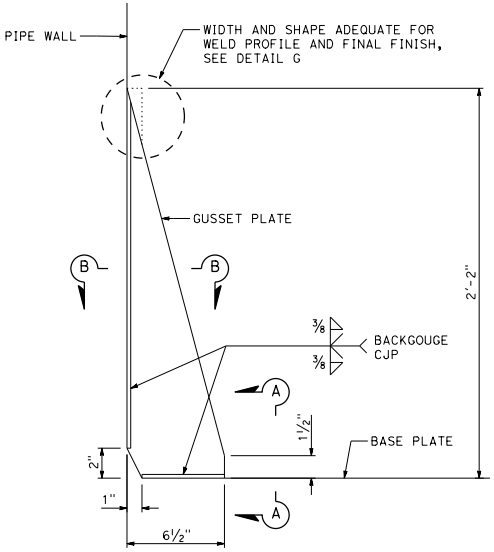

WEL DETAILS

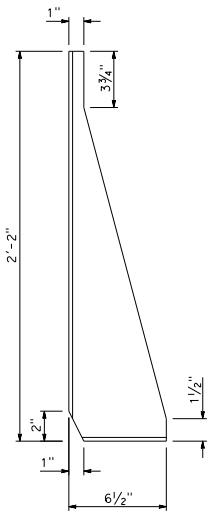

GUSSET PLATE

Initial Shape

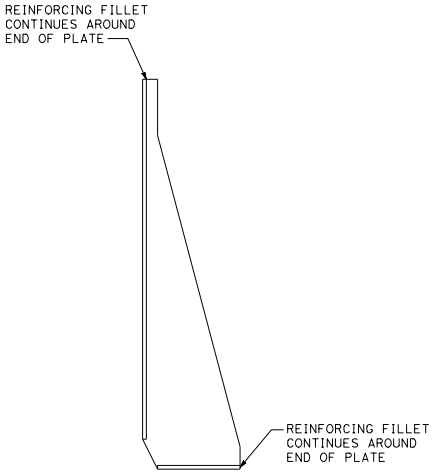

GUSSET PLATE WELDING

See Weld Details

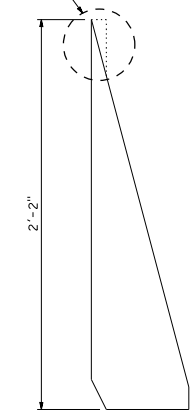

GUSSET PLATE GRINDING

See Detail G

STATE OF CALIFORNIA
DEPARTMENT OF TRANSPORTATION

OVERHEAD SIGNS-TUBULAR GUSSET PLATE DETAILS

NO SCALE

S35A

7-1-26

2026 STANDARD PLAN S35A

Return to Table of Contents

Dist	COUNTY	ROUTE	POST MILES TOTAL PROJECT	SHEET No.	TOTAL SHEETS

REGISTERED CIVIL ENGINEER

September 18, 2026

PLANS APPROVAL DATE

REGISTERED PROFESSIONAL ENGINEER Mahesh Shrestha No. C80133 Exp. 9-30-26 CIVIL STATE OF CALIFORNIA

THE STATE OF CALIFORNIA OR ITS OFFICERS OR AGENTS SHALL NOT BE RESPONSIBLE FOR THE ACCURACY OR COMPLETENESS OF SCANNED COPIES OF THIS PLAN SHEET.

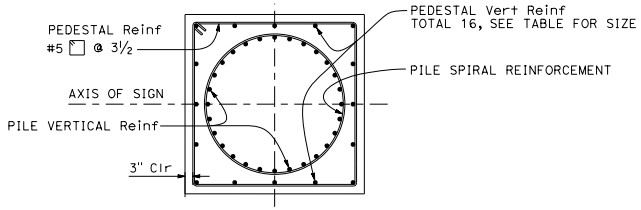

SECTION B-B

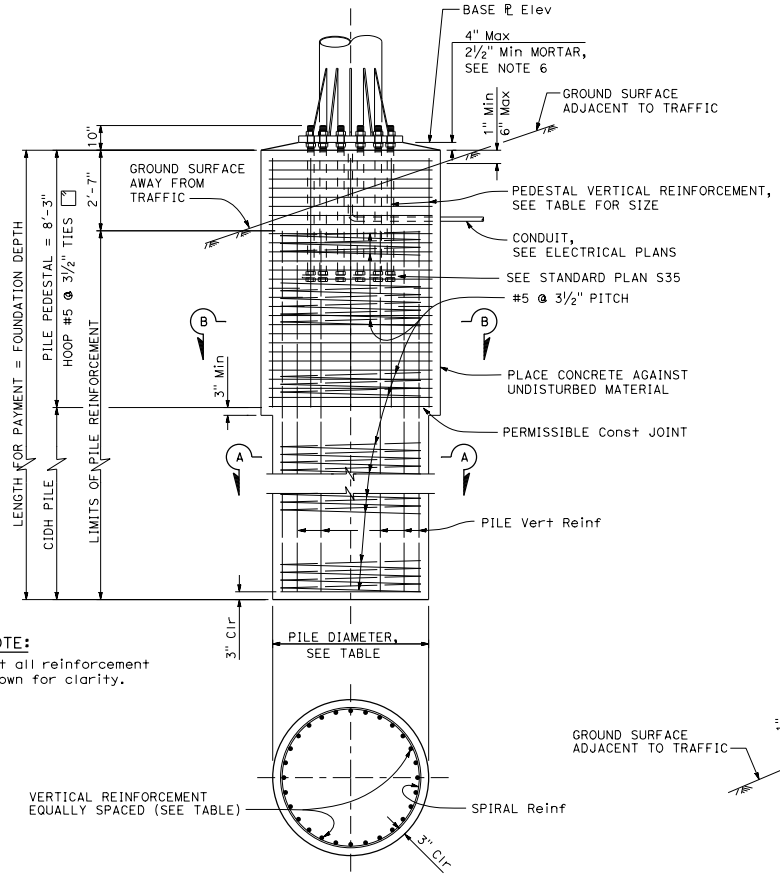

NOTE:
Not all reinforcement shown for clarity.

SECTION A-A

NOTES:

1. For anchor bolt layout, see Standard Plan S35.
2. For Base ℄ elevation, see Project Plans.
3. Before erection of the post, backfill which is equivalent to the surrounding material, shall be in place.
4. Pedestal shall be formed 6" minimum below ground surface. Remainder to be placed against undisturbed material.
5. Slope protection required when indicated on the Project Plans.
6. For drain holes and central void in mortar, see Standard Plan ES-6B Detail N.

POST TYPE No.	ANCHOR BOLTS			SQUARE PILE PEDESTAL						CIDH PILE					FOUNDATION DEPTH **
	BOLT CIRCLE Dia	BOLT TOTAL AND Dia	TOTAL LENGTH	PEDESTAL SQUARE ONE SIDE	VERTICAL REINFORCING			HOOP		PILE Dia	VERTICAL REINFORCING		SPIRAL		
					BAR SIZE	No. OF BARS EACH FACE	TOTAL	BAR SIZE	SPACING		BAR SIZE	TOTAL	BAR SIZE	PITCH	
I	2'-6"	14-2"	4'-2"	5'-6"	#11	5	16	#5	3½"	5'-0"	#11	28	#5	3½"	25'-0"
II	2'-10"	14-2½"	5'-0"	5'-6"	#11	5	16	#5	3½"	5'-0"	#11	28	#5	3½"	25'-0"
III	2'-10"	14-2½"	5'-0"	5'-6"	#11	5	16	#5	3½"	5'-0"	#11	28	#5	3½"	25'-0"
IV	3'-4"	16-2½"	5'-0"	5'-6"	#11	5	16	#5	3½"	5'-0"	#11	28	#5	3½"	33'-0"
V	3'-4"	16-2½"	5'-0"	5'-6"	#11	5	16	#5	3½"	5'-0"	#11	28	#5	3½"	33'-0"
VI	3'-4"	16-2½"	5'-0"	5'-6"	#11	5	16	#5	3½"	5'-0"	#11	28	#5	3½"	33'-0"

** Use Foundation Depth shown in table unless otherwise shown on the Project Plans.

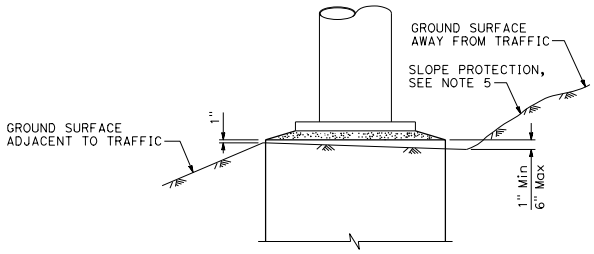

DETAIL C

STATE OF CALIFORNIA
DEPARTMENT OF TRANSPORTATION

OVERHEAD SIGNS-TUBULAR SINGLE POST AND TWO POST TYPE SQUARE PEDESTAL PILE FOUNDATION

NO SCALE

S36

7-1-26

2026 STANDARD PLAN S36

Return to Table of Contents

Dist	COUNTY	ROUTE	POST MILES TOTAL PROJECT	SHEET No.	TOTAL SHEETS

REGISTERED CIVIL ENGINEER

September 18, 2026

PLANS APPROVAL DATE

REGISTERED PROFESSIONAL ENGINEER Mahesh Shrestha No. C80133 Exp. 9-30-26 CIVIL STATE OF CALIFORNIA

THE STATE OF CALIFORNIA OR ITS OFFICERS OR AGENTS SHALL NOT BE RESPONSIBLE FOR THE ACCURACY OR COMPLETENESS OF SCANNED COPIES OF THIS PLAN SHEET.

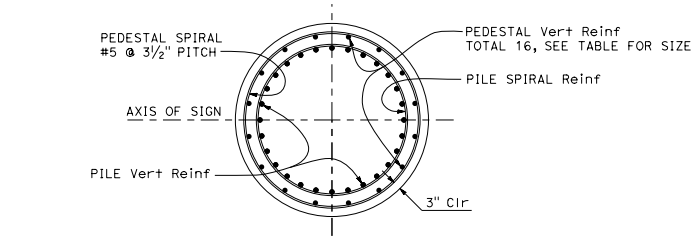

SECTION B-B

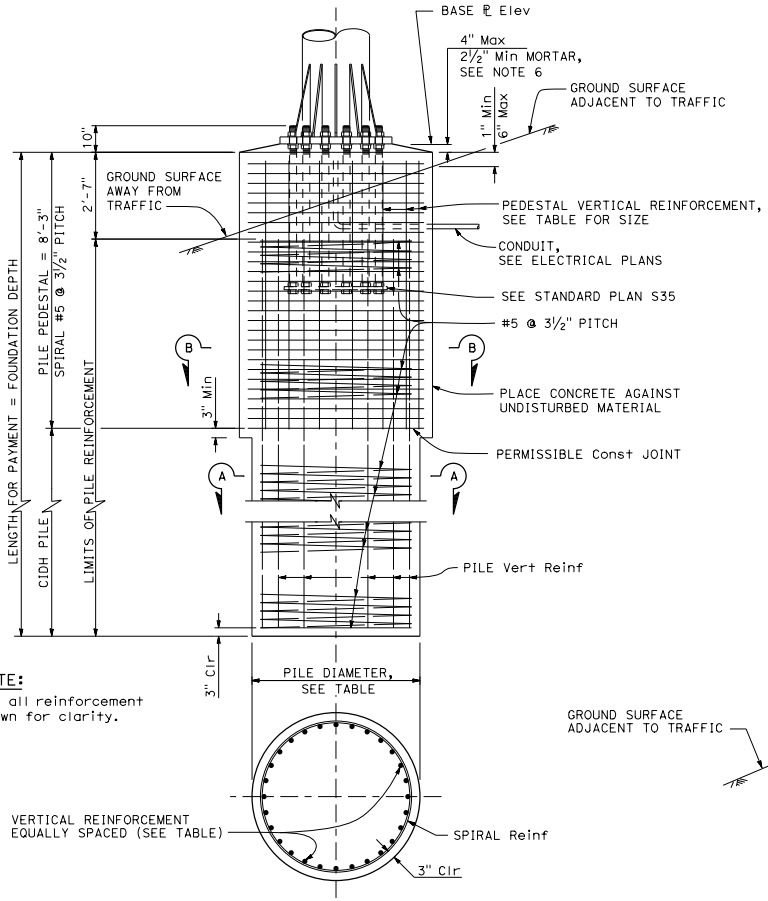

SECTION A-A

NOTE:

Not all reinforcement shown for clarity.

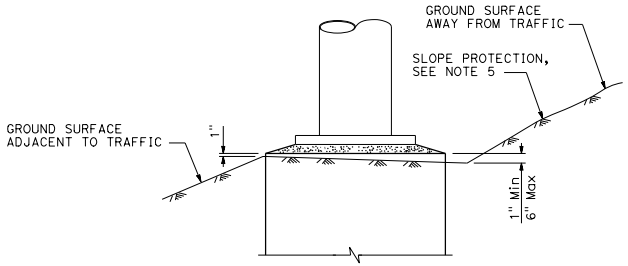

DETAIL C

NOTES:

1. For anchor bolt layout, see Standard Plan S35.
2. For Base ℄ elevation, see Project Plans.
3. Before erection of the post, backfill which is equivalent to the surrounding material, shall be in place.
4. Pedestal shall be formed 6" minimum below ground surface. Remainder to be placed against undisturbed material.
5. Slope protection required when indicated on the Project Plans.
6. For drain holes and central void in mortar, see Standard Plan ES-6B Detail N.

POST TYPE No.	ANCHOR BOLTS			ROUND PILE PEDESTAL					CIDH PILE					FOUNDATION DEPTH * *
	BOLT CIRCLE Dia	BOLT TOTAL AND Dia	TOTAL LENGTH	Dia	VERTICAL REINFORCING		SPIRAL		PILE Dia	VERTICAL REINFORCING		SPIRAL		
					BAR SIZE	TOTAL	BAR SIZE	PITCH		BAR SIZE	TOTAL	BAR SIZE	PITCH	
I	2'-6"	14-2"	4'-2"	5'-6"	#11	16	#5	3½"	5'-0"	#11	28	#5	3½"	25'-0"
II	2'-10"	14-2½"	5'-0"	5'-6"	#11	16	#5	3½"	5'-0"	#11	28	#5	3½"	25'-0"
III	2'-10"	14-2½"	5'-0"	5'-6"	#11	16	#5	3½"	5'-0"	#11	28	#5	3½"	25'-0"
IV	3'-4"	16-2½"	5'-0"	5'-6"	#11	16	#5	3½"	5'-0"	#11	28	#5	3½"	33'-0"
V	3'-4"	16-2½"	5'-0"	5'-6"	#11	16	#5	3½"	5'-0"	#11	28	#5	3½"	33'-0"
VI	3'-4"	16-2½"	5'-0"	5'-6"	#11	16	#5	3½"	5'-0"	#11	28	#5	3½"	33'-0"

* * Use Foundation Depth shown in table unless otherwise shown on the Project Plans.

STATE OF CALIFORNIA
DEPARTMENT OF TRANSPORTATION

OVERHEAD SIGNS-TUBULAR SINGLE POST AND TWO POST TYPE ROUND PEDESTAL PILE FOUNDATION

NO SCALE

S37

2026 STANDARD PLAN S37

7-1-26

Return to Table of Contents

Dist	COUNTY	ROUTE	POST MILES TOTAL PROJECT	SHEET No.	TOTAL SHEETS

REGISTERED CIVIL ENGINEER

September 18, 2026

PLANS APPROVAL DATE

REGISTERED PROFESSIONAL ENGINEER — Mahesh Shrestha — No. C80133 — Exp. 9-30-26 — CIVIL — STATE OF CALIFORNIA

THE STATE OF CALIFORNIA OR ITS OFFICERS OR AGENTS SHALL NOT BE RESPONSIBLE FOR THE ACCURACY OR COMPLETENESS OF SCANNED COPIES OF THIS PLAN SHEET.

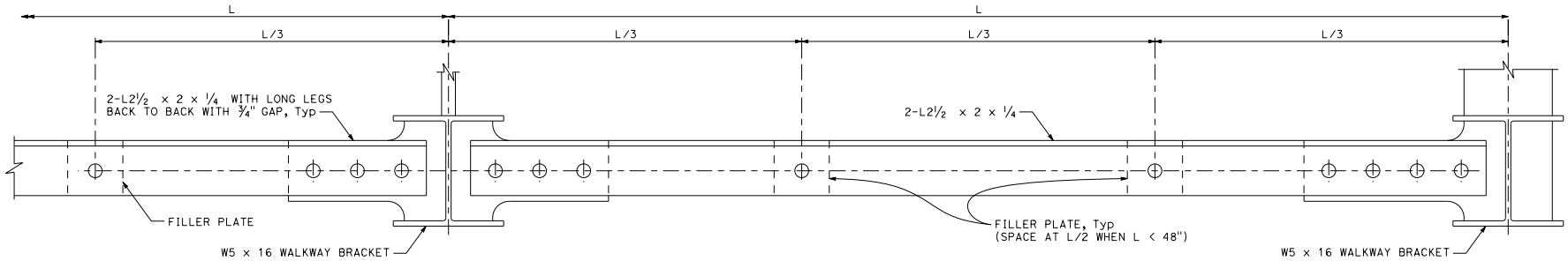

STRUT SYSTEM AT TUBULAR AND BRIDGE MOUNTED SIGNS

Continuous between end safety lug locations.

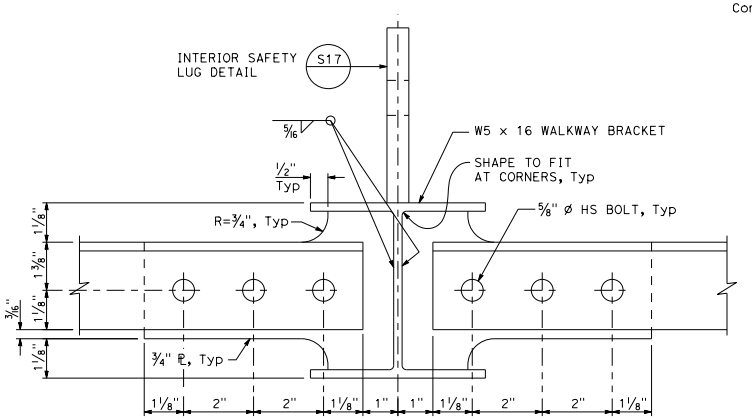

INTERIOR SAFETY LUG LOCATION

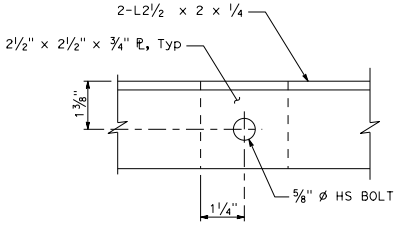

FILLER PLATE

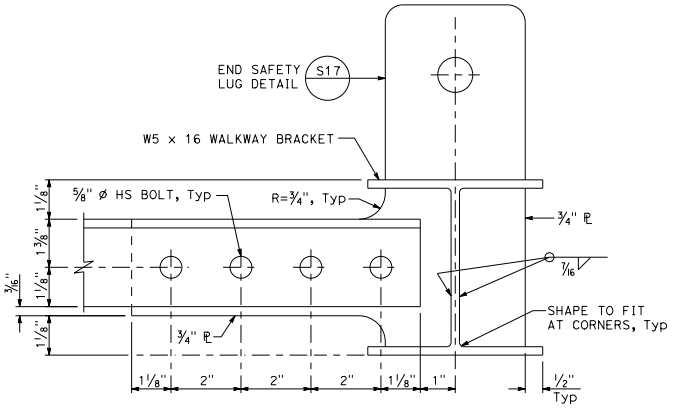

END SAFETY LUG LOCATION

STATE OF CALIFORNIA
DEPARTMENT OF TRANSPORTATION

OVERHEAD SIGNS-TUBULAR COMPRESSION STRUT DETAILS AT WALKWAY

NO SCALE

S38

7-1-26

2026 STANDARD PLAN S38

Return to Table of Contents

Dist	COUNTY	ROUTE	POST MILES TOTAL PROJECT	SHEET No.	TOTAL SHEETS

REGISTERED CIVIL ENGINEER

September 18, 2026
PLANS APPROVAL DATE

REGISTERED PROFESSIONAL ENGINEER
Mahesh Shrestha
No. C80133
Exp. 9-30-26
CIVIL
STATE OF CALIFORNIA

THE STATE OF CALIFORNIA OR ITS OFFICERS OR AGENTS SHALL NOT BE RESPONSIBLE FOR THE ACCURACY OR COMPLETENESS OF SCANNED COPIES OF THIS PLAN SHEET.

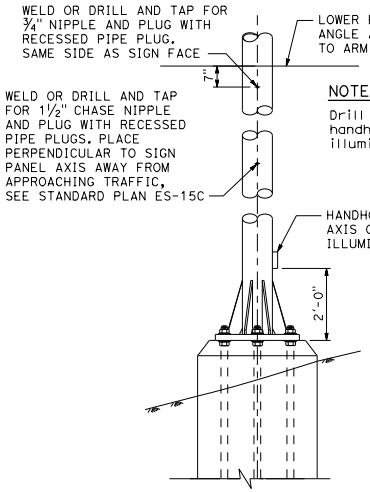

ELEVATION

NOTE:

Drill holes, plugs and handhole required on illuminated signs only.

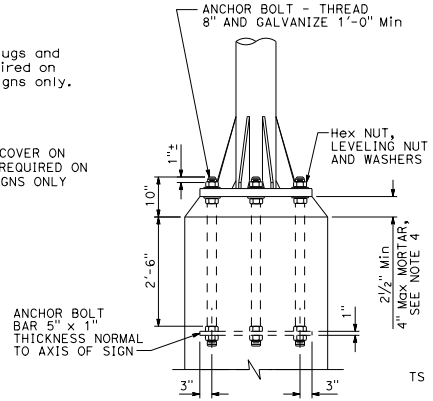

ANCHORAGE BOLT

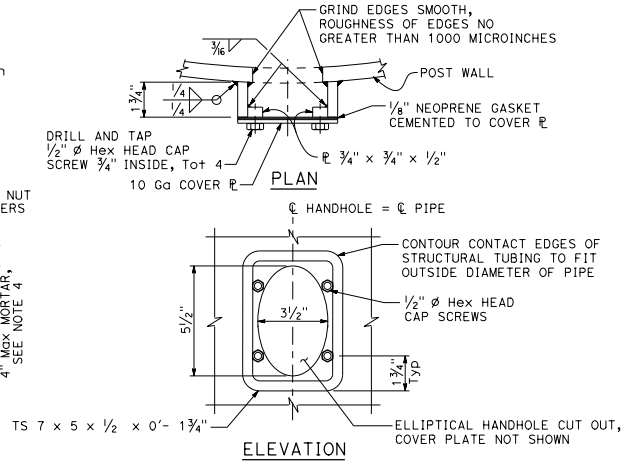

ELEVATION

TYPICAL DETAILS OF HANDHOLE AND COVER

GENERAL NOTES:

DESIGN: 70 mph (fastest mile)

WELDING: All welding continuous unless otherwise noted on the plans. All welding to be done in accordance with the Standard Specifications.

NOTES:

1. Footing shall be placed with long dimensions normal to axis of sign.
2. On single post signs the post shall be raked out of plumb with the use of leveling nuts to make the bottom of the sign panel level.
3. 2½" ø anchor bolts may be substituted for 2¼" ø bolts.
4. For drain holes and central void in mortar, see Standard Plan ES-6B Detail N.

POST		BASE PLATE	ANCHOR BOLTS
NPS	"t"		BOLT TOTALS AND Dia OF BOLT
6	9/32"	2" x 1'-9" x 1'-9"	8 - 2"
6	7/16"	2" x 1'-9" x 1'-9"	8 - 2"
8	5/16"	2" x 1'-9" x 1'-9"	8 - 2"
8	½"	2" x 1'-9" x 1'-9"	8 - 2"
10	½"	2" x 2'-4" x 2'-4"	8 - 2¼"
12	½"	2" x 2'-4" x 2'-4"	8 - 2¼"
14	½"	2" x 2'-4" x 2'-4"	8 - 2¼"
14	¾"	2" x 2'-4" x 2'-4"	8 - 2¼"

"t" = Wall Thickness

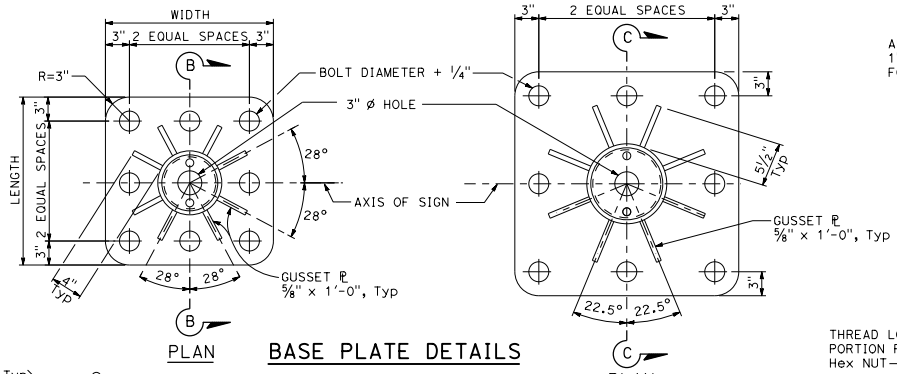

BASE PLATE DETAILS

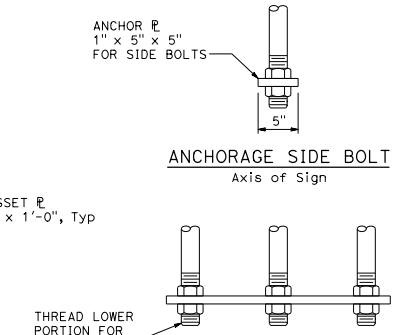

ANCHORAGE SIDE BOLT
Axis of Sign

ANCHOR BOLT BAR CONNECTIONS

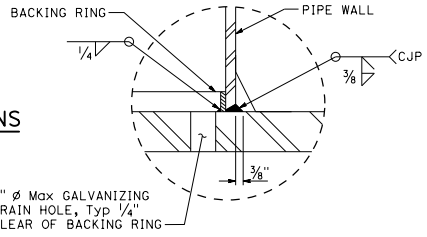

DETAIL A

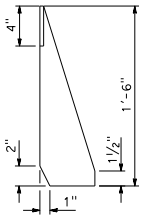

GUSSET PLATE

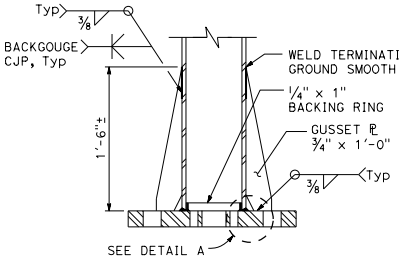

SECTION B-B
6 NPS THRU 8 NPS POSTS

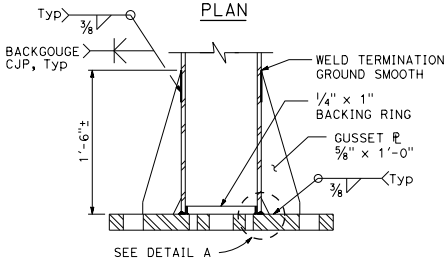

SECTION C-C
10 NPS THRU 14 NPS POSTS

POST TO BASE PLATE CONNECTION DETAILS

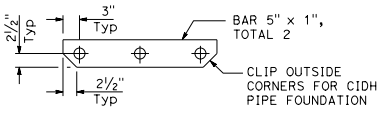

PLAN

ANCHOR BOLT BAR DETAIL

STATE OF CALIFORNIA
DEPARTMENT OF TRANSPORTATION

OVERHEAD SIGNS-LIGHTWEIGHT POST DETAILS

NO SCALE

S48

7-1-26

2026 STANDARD PLAN S48

Return to Table of Contents

Dist	COUNTY	ROUTE	POST MILES TOTAL PROJECT	SHEET No.	TOTAL SHEETS

REGISTERED CIVIL ENGINEER

September 18, 2026
PLANS APPROVAL DATE

REGISTERED PROFESSIONAL ENGINEER
Mahesh Shrestha
No. C80133
Exp. 9-30-26
CIVIL
STATE OF CALIFORNIA

THE STATE OF CALIFORNIA OR ITS OFFICERS OR AGENTS SHALL NOT BE RESPONSIBLE FOR THE ACCURACY OR COMPLETENESS OF SCANNED COPIES OF THIS PLAN SHEET.

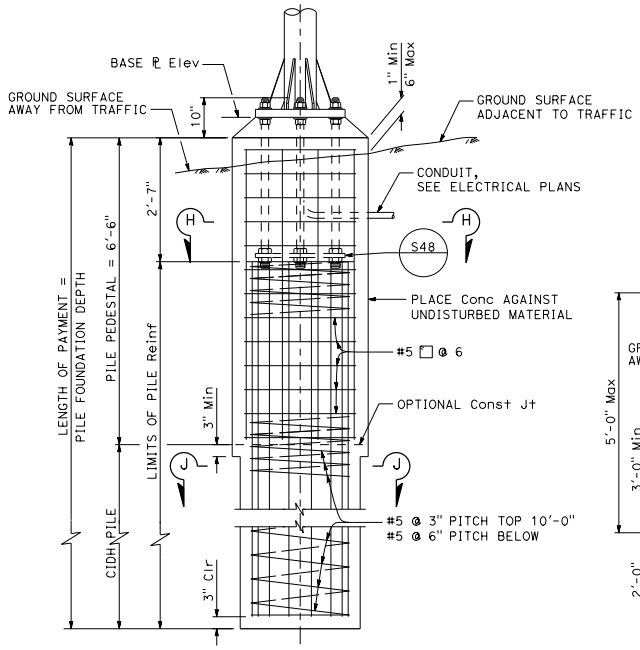

ELEVATION

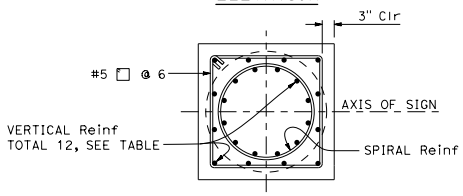

SECTION H-H

NOTE:
Not all reinforcement shown for clarity.

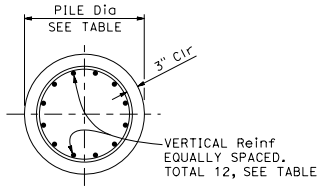

SECTION J-J

PILE FOUNDATION
6 NPS THRU 14 NPS POSTS

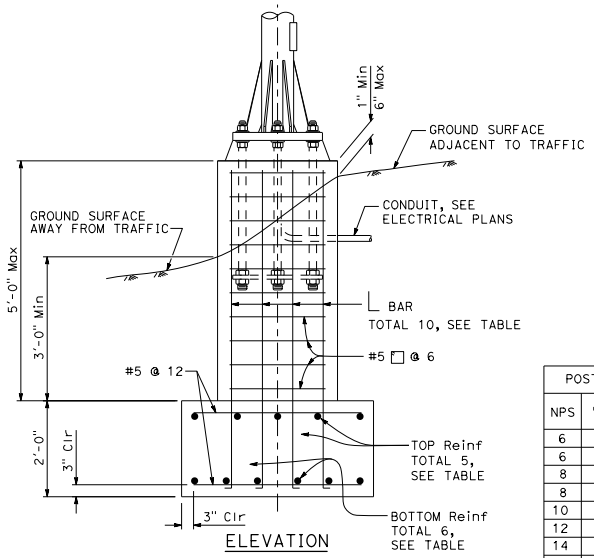

ELEVATION

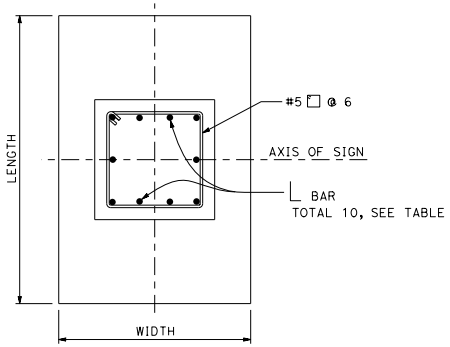

PLAN
SPREAD FOOTING

NOTES:

1. Backfill shall be in place before erection of post.
2. Slope protection required when indicated on the plans.
3. Pile pedestal shall be formed 6" minimum below ground surface. Remainder to be placed against undisturbed material.

POST		PILE FOUNDATION				SPREAD FOOTING				
NPS	"t"	PEDESTAL	PILE Dia	PILE DEPTH	VERTICAL Reinf	PEDESTAL	FOOTING WIDTH × LENGTH	REINFORCEMENT TOP	BOTTOM	L BAR
6	9/32"	2'-10" x 2'-10"	30"	10'-0"	#6	2'-6" x 2'-6"	4'-0" x 6'-0"	#5	#5	#5
6	7/16"	2'-10" x 2'-10"	30"	10'-0"	#6	2'-6" x 2'-6"	4'-0" x 7'-0"	#5	#5	#5
8	5/16"	2'-10" x 2'-10"	30"	10'-0"	#6	2'-6" x 2'-6"	5'-0" x 8'-0"	#5	#5	#5
8	1/2"	2'-10" x 2'-10"	30"	11'-0"	#7	2'-6" x 2'-6"	6'-0" x 9'-0"	#5	#5	#5
10	1/2"	3'-4" x 3'-4"	36"	13'-0"	#8	3'-0" x 3'-0"	7'-0" x 10'-0"	#5	#8	#8
12	1/2"	3'-4" x 3'-4"	36"	15'-0"	#10	3'-0" x 3'-0"	7'-0" x 12'-0"	#6	#8	#8
14	1/2"	3'-4" x 3'-4"	36"	15'-0"	#10	3'-0" x 3'-0"	7'-0" x 13'-0"	#8	#9	#8
14	3/4"	3'-4" x 3'-4"	36"	16'-0"	#10	3'-0" x 3'-0"	8'-0" x 14'-0"	#8	#9	#8

"t" = WALL THICKNESS

STATE OF CALIFORNIA
DEPARTMENT OF TRANSPORTATION

OVERHEAD SIGNS-LIGHTWEIGHT FOUNDATION DETAILS

NO SCALE

S49

2026 STANDARD PLAN S49

7-1-26

Return to Table of Contents

Dist	COUNTY	ROUTE	POST MILES TOTAL PROJECT	SHEET No.	TOTAL SHEETS

REGISTERED CIVIL ENGINEER

September 18, 2026
PLANS APPROVAL DATE

REGISTERED PROFESSIONAL ENGINEER
Mahesh Shrestha
No. C80133
Exp. 9-30-26
CIVIL
STATE OF CALIFORNIA

THE STATE OF CALIFORNIA OR ITS OFFICERS OR AGENTS SHALL NOT BE RESPONSIBLE FOR THE ACCURACY OR COMPLETENESS OF SCANNED COPIES OF THIS PLAN SHEET.

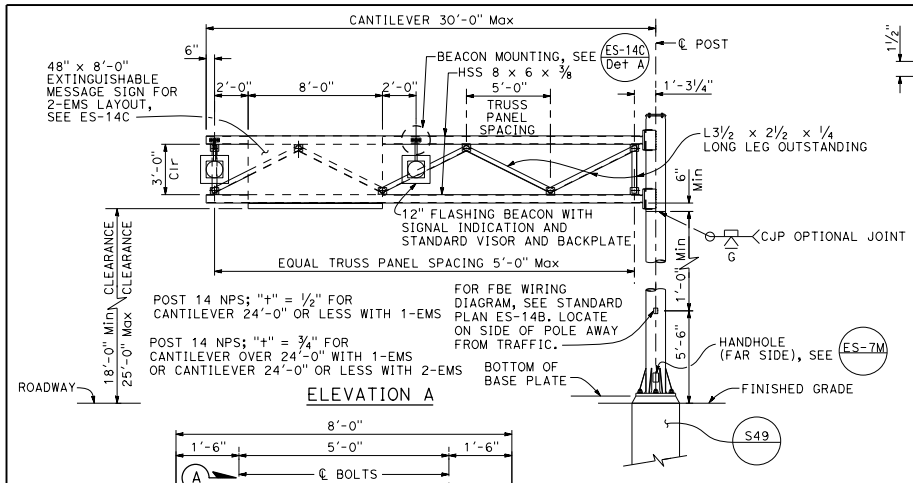

ELEVATION A

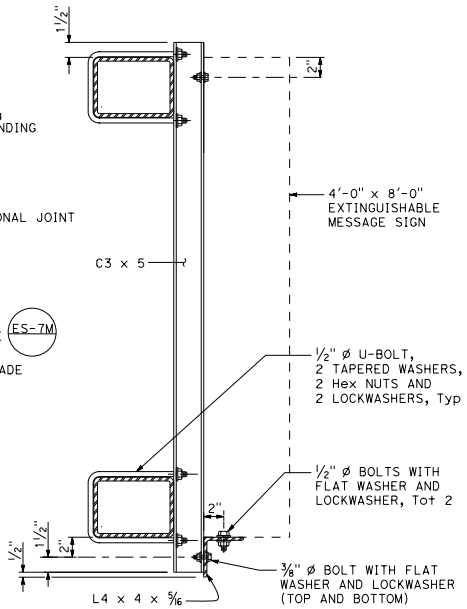

SECTION A-A

NOTES:

1. For sign structure dimensions, see Project Plans.
2. For bolt-access hole details, see Standard Plan S113.

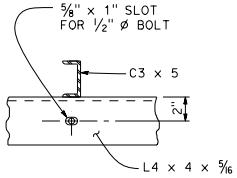

SECTION B-B

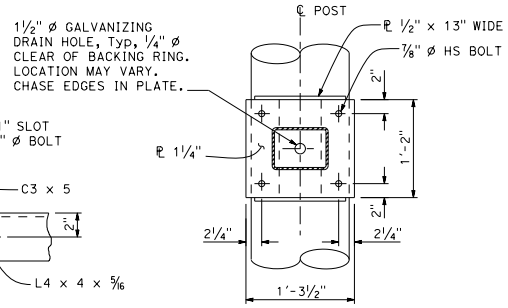

SECTION C-C

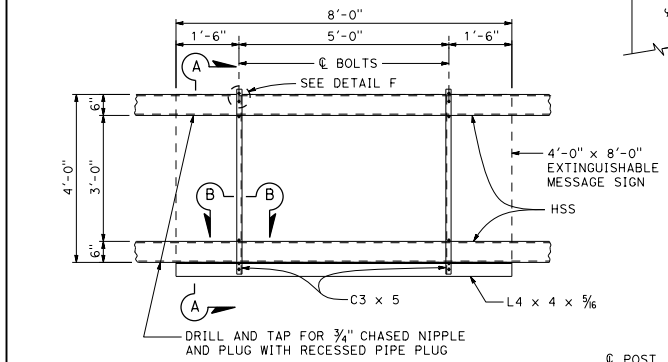

SIGN MOUNTING

DETAIL H

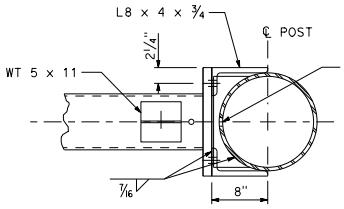

SECTION D-D

Other steel not shown for clarity

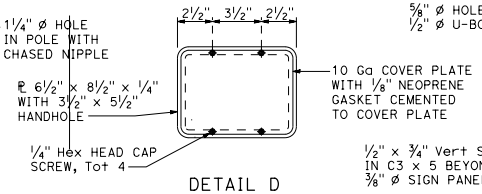

DETAIL D

END CAP

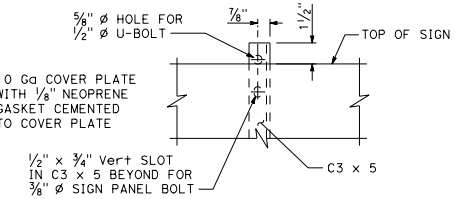

DETAIL F

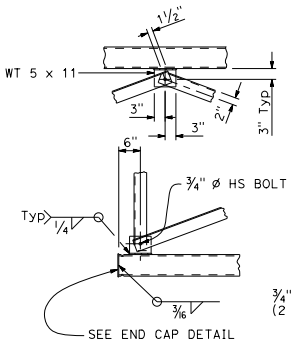

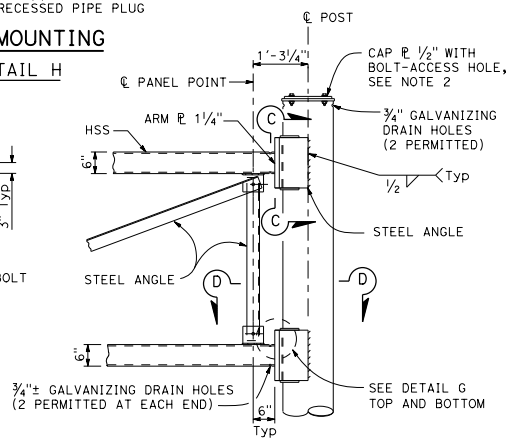

TRUSS FRAME CONNECTION

DETAIL I

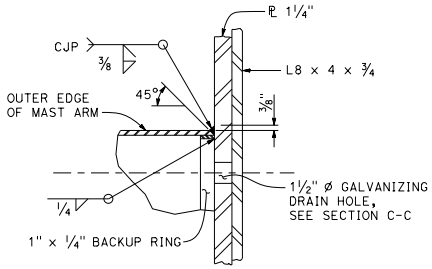

DETAIL G

STATE OF CALIFORNIA
DEPARTMENT OF TRANSPORTATION

OVERHEAD SIGNS-LIGHTWEIGHT EXTINGUISHABLE MESSAGE SIGN AND FLASHING BEACONS

NO SCALE

S50

7-1-26

Return to Table of Contents

Dist	COUNTY	ROUTE	POST MILES TOTAL PROJECT	SHEET No.	TOTAL SHEETS

Mario Lozano
REGISTERED CIVIL ENGINEER

September 18, 2026
PLANS APPROVAL DATE

REGISTERED PROFESSIONAL ENGINEER
Mario Lozano-Cisneros
No. C94626
Exp. 3-31-27
CIVIL
STATE OF CALIFORNIA

THE STATE OF CALIFORNIA OR ITS OFFICERS OR AGENTS SHALL NOT BE RESPONSIBLE FOR THE ACCURACY OR COMPLETENESS OF SCANNED COPIES OF THIS PLAN SHEET.

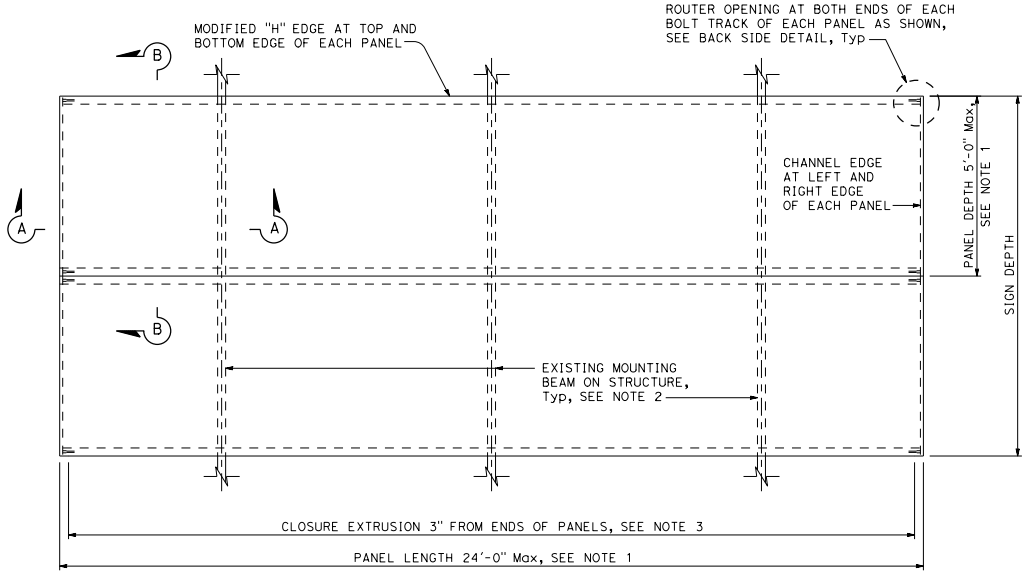

FACE VIEW OF LAMINATED PANEL

Two panels shown, see Note 7

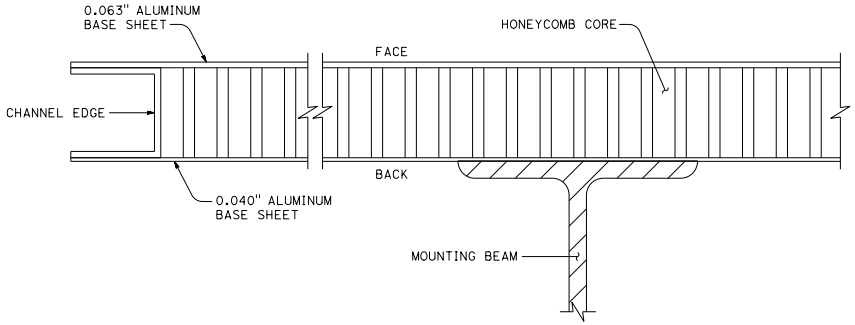

SECTION A-A

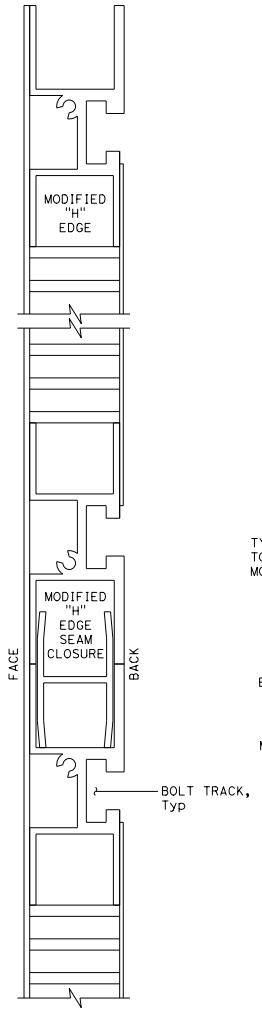

SECTION B-B

NOTES:

1. Panel length shall be graduated in increments of 1'-0". Panel depth shall be 1'-8" to 5'-0", graduated in increments of 10".
2. Unless otherwise shown on the plans, refer to applicable Standard Plan for location of structure supports and mounting details.
3. For multiple panel signs, see Standard Plan S85 for seam closure extrusion quantities.
4. See Standard Plan S86 for extrusion details.
5. See Standard Plan S87 for Type A-1 mounting hardware and Standard Plan S88 for Type A-2 mounting hardware.
6. All horizontal extrusions shall be continuous.
7. Place three 1/8" Ø weep holes in bottom of each panel. One hole in the center and one hole 3" from each end.

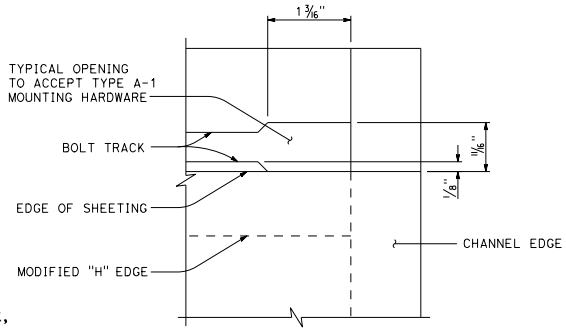

BACK SIDE DETAIL (TYPICAL)

STATE OF CALIFORNIA
DEPARTMENT OF TRANSPORTATION

OVERHEAD LAMINATED SIGN SINGLE OR MULTIPLE PANEL (TYPE A, 1" THICK)

NO SCALE

S81

2026 STANDARD PLAN S81

7-1-26

Return to Table of Contents

Dist	COUNTY	ROUTE	POST MILES TOTAL PROJECT	SHEET No.	TOTAL SHEETS

Mario Lozano
REGISTERED CIVIL ENGINEER

September 18, 2026
PLANS APPROVAL DATE

REGISTERED PROFESSIONAL ENGINEER Mario Lozano-Cisneros No. C94626 Exp. 3-31-27 CIVIL STATE OF CALIFORNIA

THE STATE OF CALIFORNIA OR ITS OFFICERS OR AGENTS SHALL NOT BE RESPONSIBLE FOR THE ACCURACY OR COMPLETENESS OF SCANNED COPIES OF THIS PLAN SHEET.

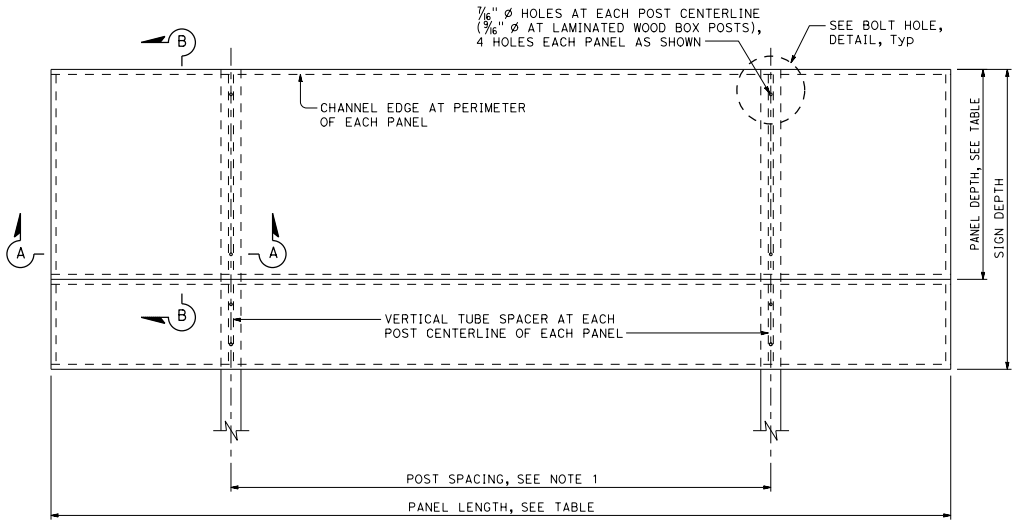

FACE VIEW OF LAMINATED PANEL

Two panels shown, see Note 6

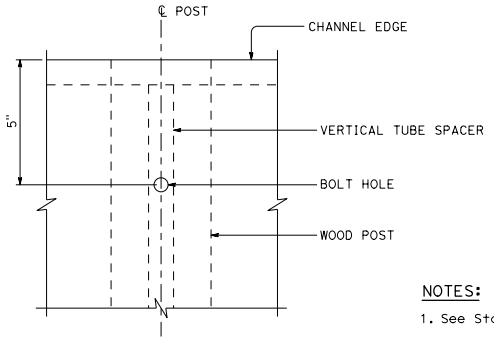

BOLT HOLE DETAIL

NOTES:

1. See Standard Plan S85 for post spacing table.
2. See Standard Plan S86 for extrusion details.
3. All horizontal extrusions shall be continuous.
4. Depth and length of panel shall be graduated in increments of 6".
5. For multiple panel signs, see Standard Plan S85 for seam closure extrusion quantities.
6. Place three 1/8" Ø weep holes in bottom of each panel. One hole in the center and one hole 3" from each end.

TABLE

TYPE B PANEL 1" THICK	
PANEL DEPTH	PANEL LENGTH
5'-0"	4'-6" TO 15'-0"
4'-6"	4'-6" TO 15'-0"
4'-0"	4'-6" TO 15'-0"
3'-6"	4'-6" TO 15'-0"
3'-0"	4'-6" TO 15'-0"
2'-6"	4'-6" TO 15'-0"
2'-0"	4'-6" TO 15'-0"
1'-6"	4'-6" TO 15'-0"

See Note 4

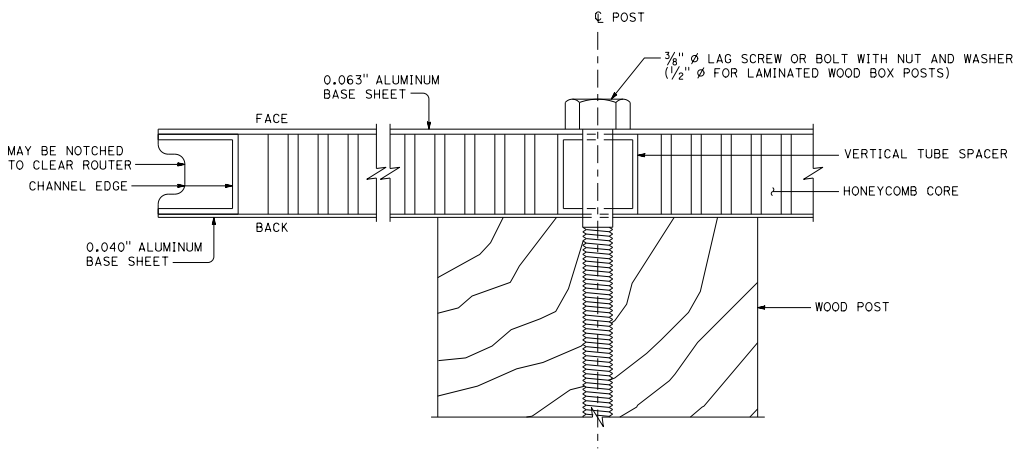

SECTION A-A

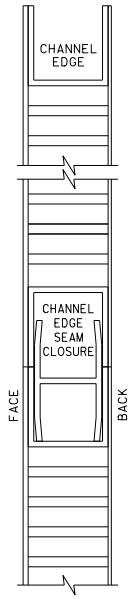

SECTION B-B

STATE OF CALIFORNIA
DEPARTMENT OF TRANSPORTATION

ROADSIDE LAMINATED SIGN SINGLE OR MULTIPLE PANEL (TYPE B, 1" THICK)

NO SCALE

2026 STANDARD PLAN S82

S82

7-1-26

500

Return to Table of Contents

Dist	COUNTY	ROUTE	POST MILES TOTAL PROJECT	SHEET No.	TOTAL SHEETS

Mario Lozano
REGISTERED CIVIL ENGINEER

September 18, 2026
PLANS APPROVAL DATE

REGISTERED PROFESSIONAL ENGINEER Mario Lozano-Cisneros No. C94626 Exp. 3-31-27 CIVIL STATE OF CALIFORNIA

THE STATE OF CALIFORNIA OR ITS OFFICERS OR AGENTS SHALL NOT BE RESPONSIBLE FOR THE ACCURACY OR COMPLETENESS OF SCANNED COPIES OF THIS PLAN SHEET.

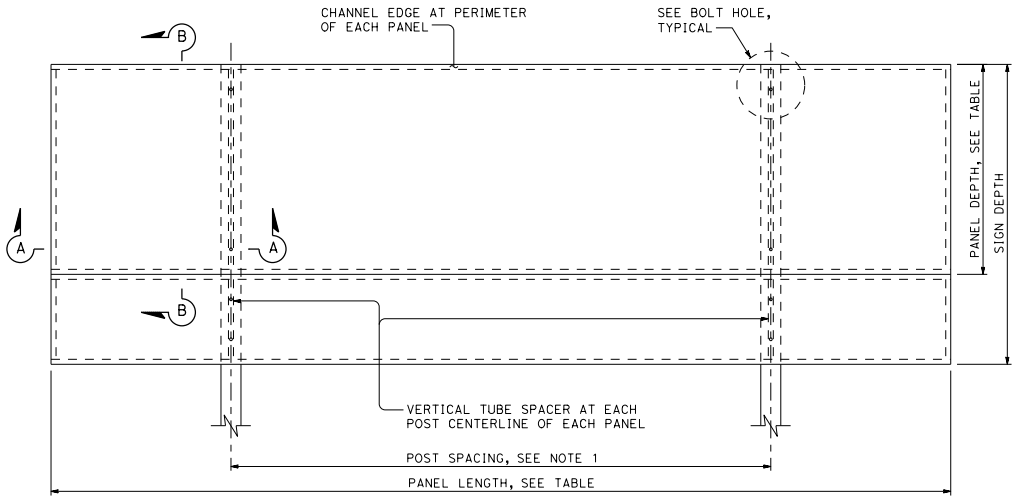

FACE VIEW OF LAMINATED PANEL

Two panels shown, see Note 6

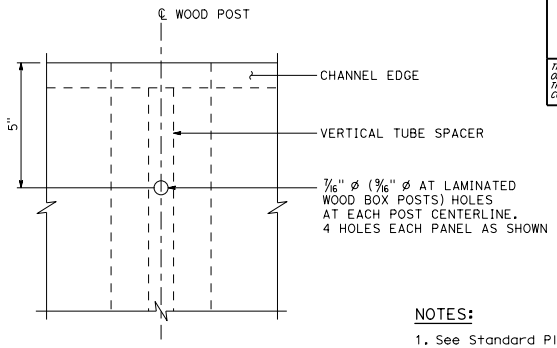

BOLT HOLE (TYPICAL)

NOTES:

1. See Standard Plan S85 for post spacing table.
2. See Standard Plan S86 for extrusion details.
3. All horizontal extrusions shall be continuous.
4. Depth and length of panel shall be graduated in increments of 6".
5. For multiple panel signs, see Standard Plan S85 for seam closure extrusion quantities.
6. Place three 1/8" ø weep holes in bottom of each panel. One hole in the center and one hole 3" from each end.

TABLE

TYPE B PANEL 2½" THICK	
PANEL DEPTH	PANEL LENGTH
5'-0"	15'-6" TO 16'-6"
4'-6"	15'-6" TO 18'-6"
4'-0"	15'-6" TO 20'-6"
3'-6"	15'-6" TO 23'-6"
3'-0"	15'-6" TO 24'-0"
2'-6"	15'-6" TO 24'-0"
2'-0"	15'-6" TO 24'-0"
1'-6"	15'-6" TO 24'-0"

See Note 4

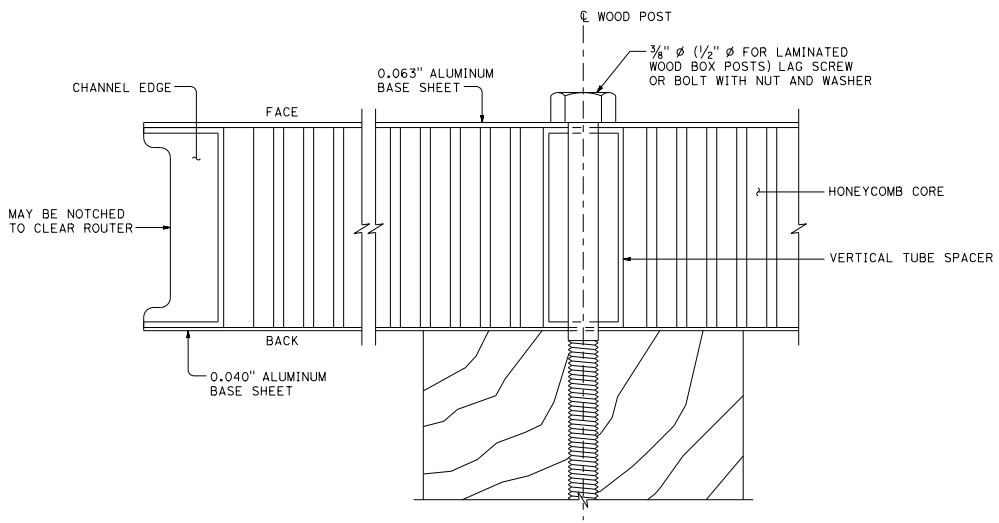

SECTION A-A

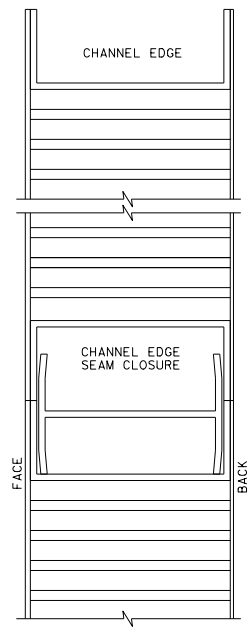

SECTION B-B

STATE OF CALIFORNIA
DEPARTMENT OF TRANSPORTATION

ROADSIDE LAMINATED SIGN SINGLE OR MULTIPLE PANEL (TYPE B, 2½" THICK)

NO SCALE

S83

2026 STANDARD PLAN S83

7-1-26

Return to Table of Contents

Dist	COUNTY	ROUTE	POST MILES TOTAL PROJECT	SHEET No.	TOTAL SHEETS

Mario Lozano
REGISTERED CIVIL ENGINEER

September 18, 2026
PLANS APPROVAL DATE

REGISTERED PROFESSIONAL ENGINEER Mario Lozano-Cisneros No. C94626 Exp. 3-31-27 CIVIL STATE OF CALIFORNIA

THE STATE OF CALIFORNIA OR ITS OFFICERS OR AGENTS SHALL NOT BE RESPONSIBLE FOR THE ACCURACY OR COMPLETENESS OF SCANNED COPIES OF THIS PLAN SHEET.

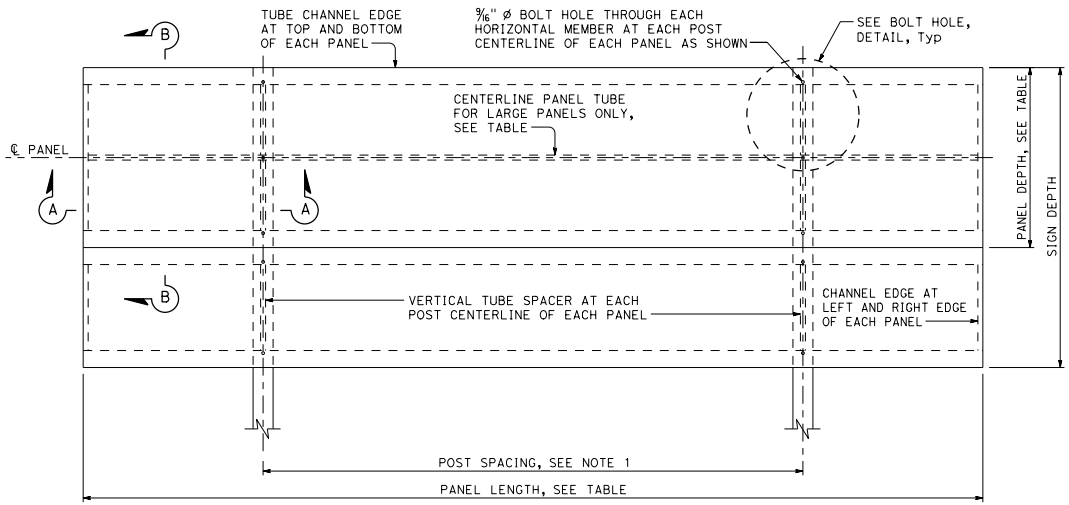

FACE VIEW OF LAMINATED PANEL

Two panels shown, see Note 7

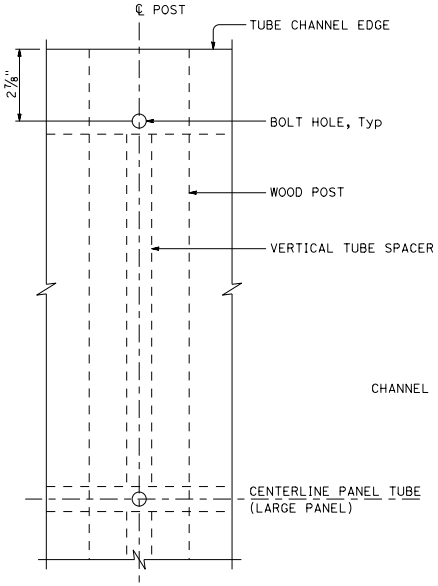

BOLT HOLE DETAIL

Large panel shown

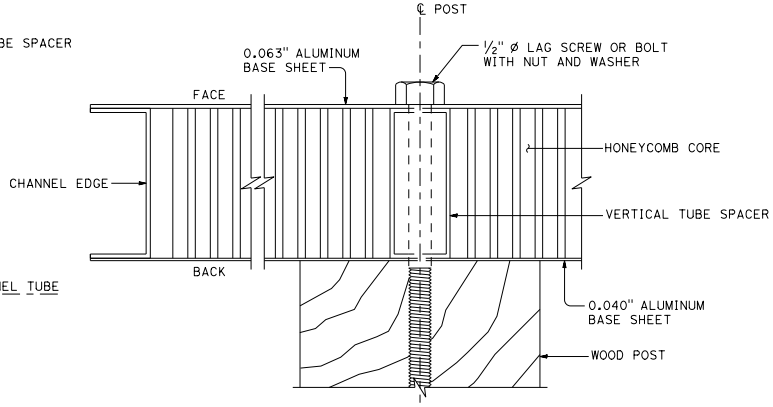

SECTION A-A

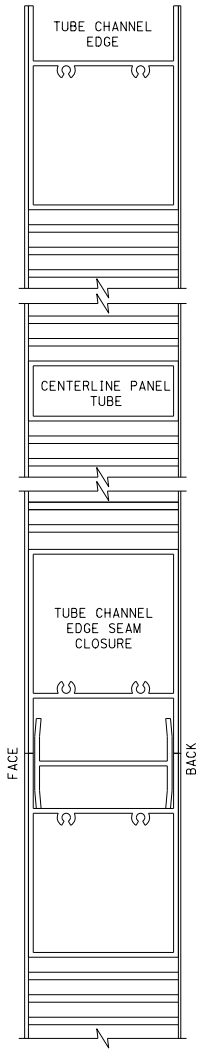

SECTION B-B

NOTES:

1. See Standard Plan S85 for post spacing table.
2. See Standard Plan S86 for extrusion details.
3. All horizontal extrusions shall be continuous.
4. Depth and length of panel shall be graduated in increments of 6".
5. For multiple panel signs, see Standard Plan S85 for seam closure extrusion quantities.
6. Panels with the dimensions shown in Table A are designated as large panels.
7. Place three 1/8" Ø weep holes in bottom of each panel. One hole in the center and one hole 3" from each end.

TABLE A

PANEL DEPTH	PANEL LENGTH
5'-0"	17'-0" TO 24'-0"
4'-6"	19'-0" TO 24'-0"
4'-0"	21'-0" TO 24'-0"
3'-6"	24'-0"

See Notes 4 and 6

STATE OF CALIFORNIA
DEPARTMENT OF TRANSPORTATION

ROADSIDE LAMINATED SIGN SINGLE OR MULTIPLE PANEL (TYPE H, 2½" THICK)

NO SCALE

2026 STANDARD PLAN S84

S84

7-1-26

Return to Table of Contents

Dist	COUNTY	ROUTE	POST MILES TOTAL PROJECT	SHEET No.	TOTAL SHEETS

Mario Lozano
REGISTERED CIVIL ENGINEER

September 18, 2026
PLANS APPROVAL DATE

REGISTERED PROFESSIONAL ENGINEER
Mario Lozano-Cisneros
No. C94626
Exp. 3-31-27
CIVIL
STATE OF CALIFORNIA

THE STATE OF CALIFORNIA OR ITS OFFICERS OR AGENTS SHALL NOT BE RESPONSIBLE FOR THE ACCURACY OR COMPLETENESS OF SCANNED COPIES OF THIS PLAN SHEET.

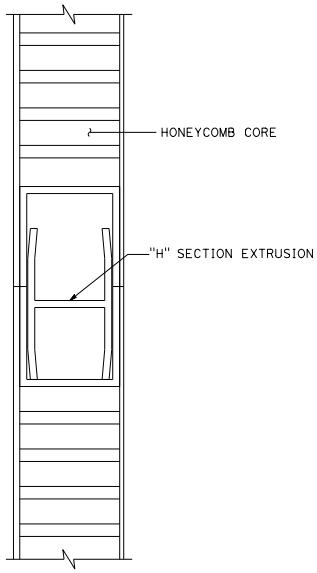

TYPICAL SEAM CLOSURE DETAIL

PANEL LENGTH	CLOSURE LENGTH	NUMBER OF PIECES AND LENGTH REQUIRED
3'-6" 4'-0"	3'-0" 3'-6"	ONE 3'-0" ONE 3'-6"
4'-6" 5'-0"	4'-0" 4'-6"	ONE 4'-0" ONE 4'-6"
5'-6" 6'-0"	5'-0" 5'-6"	ONE 5'-0" ONE 5'-6"
6'-6" 7'-0"	6'-0" 6'-6"	TWO 3'-0" ONE 3'-0", ONE 3'-6"
7'-6" 8'-0"	7'-0" 7'-6"	TWO 3'-6" ONE 3'-6", ONE 4'-0"
8'-6" 9'-0"	8'-0" 8'-6"	TWO 4'-0" ONE 4'-0", ONE 4'-6"
9'-6" 10'-0"	9'-0" 9'-6"	TWO 4'-6" ONE 4'-6", ONE 5'-0"
10'-6" 11'-0"	10'-0" 10'-6"	TWO 5'-0" ONE 5'-0", ONE 5'-6"
11'-6" 12'-0"	11'-0" 11'-6"	TWO 5'-6" TWO 4'-0", ONE 3'-6"
12'-6" 13'-0"	12'-0" 12'-6"	THREE 4'-0" TWO 4'-0", ONE 4'-6"
13'-6" 14'-0"	13'-0" 13'-6"	TWO 4'-6" THREE 4'-6", ONE 4'-0"
14'-6" 15'-0"	14'-0" 14'-6"	TWO 4'-6", ONE 5'-0" TWO 5'-0", ONE 4'-6"
15'-6" 16'-0"	15'-0" 15'-6"	THREE 5'-0" TWO 5'-6", ONE 4'-6"
16'-6" 17'-0"	16'-0" 16'-6"	TWO 5'-6" THREE 5'-6", ONE 5'-0"
18'-6" 18'-0"	17'-0" 17'-6"	THREE 4'-0", ONE 5'-0" THREE 4'-6", ONE 4'-0"
18'-6" 19'-0"	18'-0" 18'-6"	FOUR 4'-6" THREE 4'-6", ONE 5'-0"
19'-6" 20'-0"	19'-0" 19'-6"	THREE 5'-0", ONE 4'-0" THREE 5'-0", ONE 4'-6"
20'-6" 21'-0"	20'-0" 20'-6"	FOUR 5'-0" THREE 5'-6", ONE 4'-0"
21'-6" 22'-0"	21'-0" 21'-6"	THREE 5'-6", ONE 4'-6" THREE 5'-6", ONE 5'-0"
22'-6" 23'-0"	22'-0" 22'-6"	FOUR 5'-6" FIVE 4'-6"
23'-6" 24'-0"	23'-0" 23'-6"	FOUR 4'-6", ONE 5'-0" THREE 4'-6", TWO 5'-0"

"H" sections will be set in 3" from edge of panels to allow for rivet clearance in borders. Standard length in stock: 3'-0", 3'-6", 4'-0", 4'-6", 5'-0" and 5'-6".

SEAM CLOSURE
"H" SECTION EXTRUSION

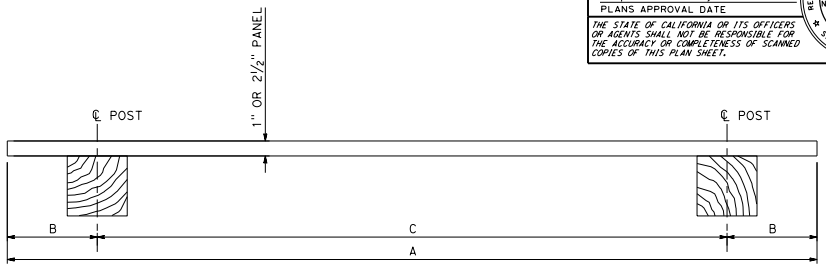

PLAN VIEW

1" PANEL			
LENGTH OF SIGN A	NUMBER OF POSTS	OVERHANG B	POST SPACING C
4'-6"	2	6"	3'-6"
5'-0"	2	9"	3'-6"
5'-6"	2	1'-0"	3'-6"
6'-0"	2	1'-0"	4'-0"
6'-6"	2	1'-3"	4'-0"
7'-0"	2	1'-3"	4'-6"
7'-6"	2	1'-6"	4'-6"
8'-0"	2	1'-6"	5'-0"
8'-6"	2	1'-8"	5'-2"
9'-0"	2	1'-10"	5'-4"
9'-6"	2	1'-11"	5'-8"
10'-0"	2	2'-0"	6'-0"
10'-6"	2	2'-0"	6'-6"
11'-0"	2	2'-0"	7'-0"
11'-6"	2	2'-3"	7'-0"
12'-0"	2	2'-6"	7'-0"
12'-6"	2	2'-6"	7'-6"
13'-0"	2	2'-6"	8'-0"
13'-6"	2	2'-6"	8'-6"
14'-0"	2	2'-6"	9'-0"
14'-6"	2	3'-0"	8'-6"
15'-0"	2	3'-0"	9'-0"

2½" PANEL			
LENGTH OF SIGN A	NUMBER OF POSTS	OVERHANG B	POST SPACING C
15'-6"	2	3'-0"	9'-6"
16'-0"	2	3'-3"	9'-6"
16'-6"	2	3'-3"	10'-0"
17'-0"	2	3'-3"	10'-6"
17'-6"	2	3'-6"	10'-6"
18'-0"	2	3'-6"	11'-0"
18'-6"	2	3'-9"	11'-0"
19'-0"	2	3'-9"	11'-6"
19'-6"	2	3'-9"	12'-0"
20'-0"	2	4'-0"	12'-0"
20'-6"	2	4'-0"	12'-6"
21'-0"	2	4'-3"	12'-6"
21'-6"	2	4'-3"	13'-0"
22'-0"	2	4'-3"	13'-6"
22'-6"	2	4'-6"	13'-6"
23'-0"	2	4'-6"	14'-0"
23'-6"	2	4'-6"	14'-6"
24'-0"	2	4'-9"	14'-6"

STANDARD POST SPACING

STATE OF CALIFORNIA
DEPARTMENT OF TRANSPORTATION

SEAM CLOSURE "H" SECTION EXTRUSION AND POST SPACING TABLES (MULTI-HORIZONTAL LAMINATED PANEL ALUMINUM SIGNS)

NO SCALE

S85

2026 STANDARD PLAN S85

7-1-26

Return to Table of Contents

Dist	COUNTY	ROUTE	POST MILES TOTAL PROJECT	SHEET No.	TOTAL SHEETS

Mario Lozano
REGISTERED CIVIL ENGINEER

September 18, 2026
PLANS APPROVAL DATE

REGISTERED PROFESSIONAL ENGINEER Mario Lozano-Cisneros No. C94626 Exp. 3-31-27 CIVIL STATE OF CALIFORNIA

THE STATE OF CALIFORNIA OR ITS OFFICERS OR AGENTS SHALL NOT BE RESPONSIBLE FOR THE ACCURACY OR COMPLETENESS OF SCANNED COPIES OF THIS PLAN SHEET.

TABLE

EXTRUSION TYPE	1" THICK PANEL		2½" THICK PANEL	
	TYPE A PANEL	TYPE B PANEL	TYPE B PANEL	TYPE H PANEL
CHANNEL EDGE	DETAIL No. 4	DETAIL No. 4	DETAIL No. 9	DETAIL No. 9
TUBE-CHANNEL EDGE	N/A	N/A	N/A	DETAIL No. 6
MODIFIED "H" EDGE	DETAIL No. 1	N/A	N/A	N/A
VERTICAL TUBE SPACER	N/A	DETAIL No. 3	DETAIL No. 8	N/A
VERTICAL TUBE SPACER (LARGE PANEL)	N/A	N/A	N/A	DETAIL No. 7
℄ PANEL TUBE (LARGE PANEL)	N/A	N/A	N/A	DETAIL No. 7
SEAM CLOSURE "H" SECTION	DETAIL No. 2	DETAIL No. 2	DETAIL No. 5	DETAIL No. 5

Note: All extrusions shall be aluminum alloy 6063-T6.

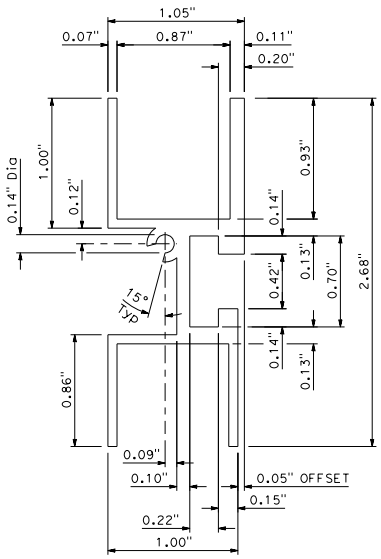

DETAIL No. 1

Unless noted, wall thickness is 0.07".

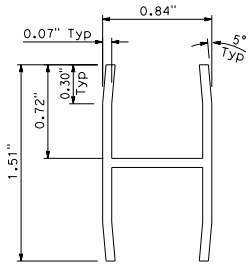

DETAIL No. 2

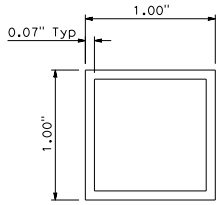

DETAIL No. 3

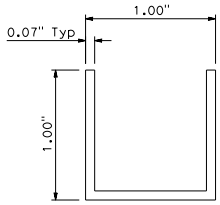

DETAIL No. 4

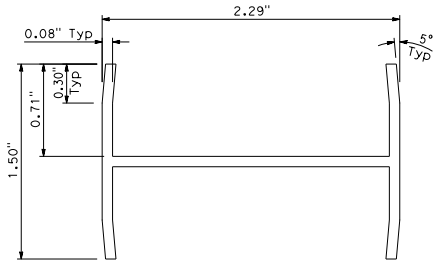

DETAIL No. 5

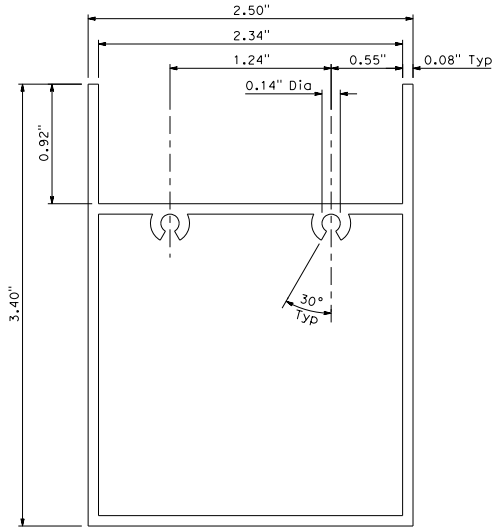

DETAIL No. 6

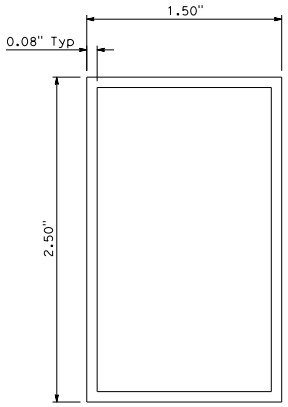

DETAIL No. 7

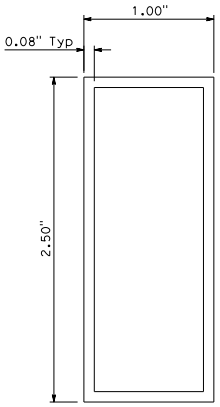

DETAIL No. 8

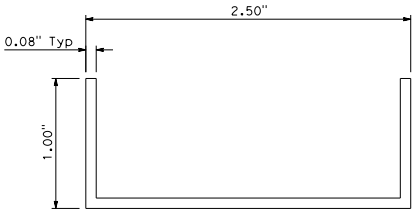

DETAIL No. 9

STATE OF CALIFORNIA
DEPARTMENT OF TRANSPORTATION

LAMINATED PANEL DETAILS (EXTRUSION FOR TYPES A, B, AND H PANELS)

NO SCALE

S86

2026 STANDARD PLAN S86

7-1-26

Return to Table of Contents

Dist	COUNTY	ROUTE	POST MILES TOTAL PROJECT	SHEET No.	TOTAL SHEETS

Mario Lozano
REGISTERED CIVIL ENGINEER

September 18, 2026
PLANS APPROVAL DATE

REGISTERED PROFESSIONAL ENGINEER
Mario Lozano-Cisneros
No. C94626
Exp. 3-31-27
CIVIL
STATE OF CALIFORNIA

THE STATE OF CALIFORNIA OR ITS OFFICERS OR AGENTS SHALL NOT BE RESPONSIBLE FOR THE ACCURACY OR COMPLETENESS OF SCANNED COPIES OF THIS PLAN SHEET.

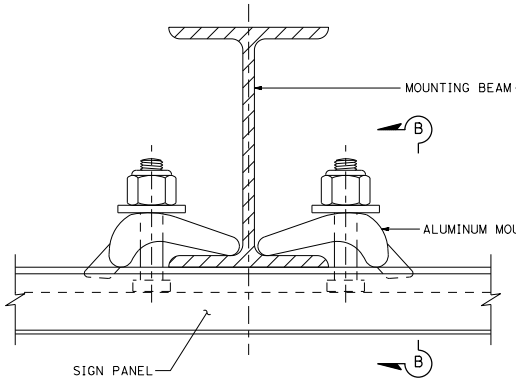

TYPICAL ALUMINUM CLAMP MOUNTING

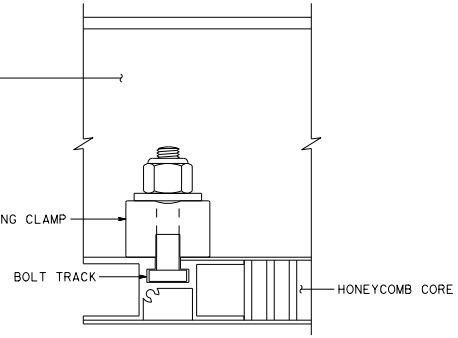

SECTION B-B

TYPICAL BOLTED CONNECTION TO STRUCTURE SUPPORT

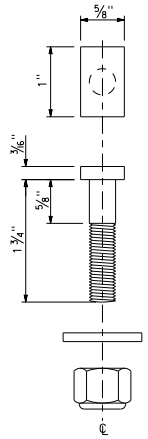

STAINLESS STEEL BOLT, WASHER AND NUT

NOTES:

1. Refer to applicable Standard Plan for additional mounting details.
2. Rectangular head bolt, hexagon stop nut, and flat washer shall be 3/8" diameter (18-8) stainless steel.
3. One unit of Type A-1 hardware shall consist of two sets of these components: clamp, bolt, nut and washer.
4. Signs 9'-2" and 10'-0" in depth may be fabricated in three panel sections to avoid legend from being placed on a horizontal seam. Increase number of units of mounting hardware accordingly.

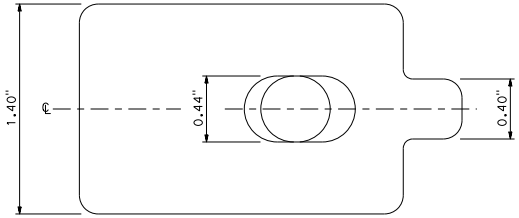

TOP VIEW

TYPE A-1 HARDWARE QUANTITY TABLE		
SIGN LENGTH	SIGN DEPTH SEE NOTE 4	UNITS REQUIRED SEE NOTE 3
15'-0" OR LESS	4'-2" TO 5'-0"	4
16'-0" TO 24'-0"	4'-2" TO 5'-0"	6
15'-0" OR LESS	5'-10" TO 10'-0"	8
16'-0" TO 24'-0"	5'-10" TO 10'-0"	12

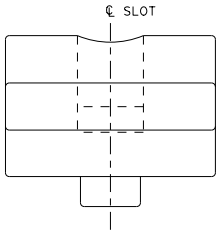

FRONT VIEW

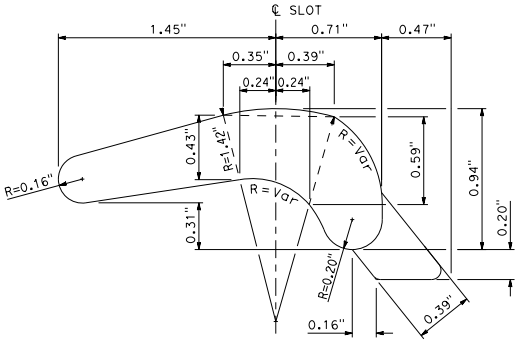

SIDE VIEW

STATE OF CALIFORNIA
DEPARTMENT OF TRANSPORTATION

TYPE A-1 MOUNTING HARDWARE FOR OVERHEAD LAMINATED TYPE A PANEL (TRUSS AND LIGHTWEIGHT SIGN STRUCTURES)

NO SCALE

S87

2026 STANDARD PLAN S87

505

7-1-26

Return to Table of Contents

Dist	COUNTY	ROUTE	POST MILES TOTAL PROJECT	SHEET No.	TOTAL SHEETS

Mario Lozano
REGISTERED CIVIL ENGINEER

September 18, 2026
PLANS APPROVAL DATE

REGISTERED PROFESSIONAL ENGINEER
Mario Lozano-Cisneros
No. C94626
Exp. 3-31-27
CIVIL
STATE OF CALIFORNIA

THE STATE OF CALIFORNIA OR ITS OFFICERS OR AGENTS SHALL NOT BE RESPONSIBLE FOR THE ACCURACY OR COMPLETENESS OF SCANNED COPIES OF THIS PLAN SHEET.

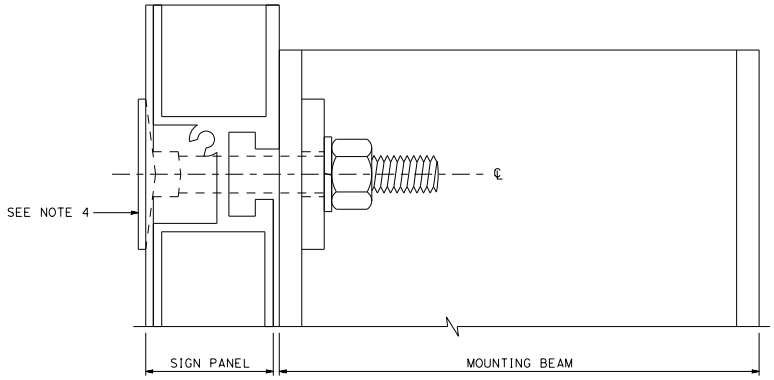

SIDE VIEW

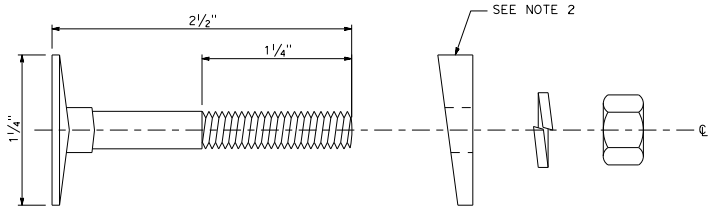

MOUNTING HARDWARE

NOTES:

1. Refer to applicable Standard Plan for additional mounting details.
2. Beveled washer for tapered flange only.
3. Elevator head bolt, hexagon nut, and lock washer shall be 5/16" diameter (18-8) stainless steel.
4. Furnish retroflective stick-ons for bolt head in same color as sign. Apply during installation.
5. One unit of Type A-2 hardware shall consist of one each; bolt, nut, lock washer and beveled washer. Quantity listed includes 1 spare unit. Quantity listed assumes panel overhangs of 1'-9" and maximum bracket spacing of 5'-6". For other layouts, more units may be required.
6. Signs 9'-2" and 10'-0" in depth may be fabricated in three panel sections to avoid legend from being placed on a horizontal seam. Increase number of units of mounting hardware accordingly.

TYPE A-2 HARDWARE QUANTITY TABLE (STANDARD TUBULAR)

SIGN LENGTH	SIGN DEPTH SEE NOTE 6	UNITS REQUIRED SEE NOTE 5
14'-0" OR LESS	4'-2" TO 5'-0"	7
15'-0" TO 20'-0"	4'-2" TO 5'-0"	9
21'-0" TO 24'-0"	4'-2" TO 5'-0"	11
14'-0" OR LESS	5'-10" TO 10'-0"	13
15'-0" TO 20'-0"	5'-10" TO 10'-0"	17
21'-0" TO 24'-0"	5'-10" TO 10'-0"	21

STATE OF CALIFORNIA
DEPARTMENT OF TRANSPORTATION

TYPE A-2 MOUNTING HARDWARE FOR OVERHEAD LAMINATED TYPE A PANEL (BRIDGE MOUNTED AND TUBULAR SIGN STRUCTURES)

NO SCALE

S88

7-1-26

2026 STANDARD PLAN S88

Return to Table of Contents

Dist	COUNTY	ROUTE	POST MILES TOTAL PROJECT	SHEET No.	TOTAL SHEETS

Mario Lozano
REGISTERED CIVIL ENGINEER

September 18, 2026
PLANS APPROVAL DATE

REGISTERED PROFESSIONAL ENGINEER Mario Lozano-Cisneros No. C94626 Exp. 3-31-27 CIVIL STATE OF CALIFORNIA

THE STATE OF CALIFORNIA OR ITS OFFICERS OR AGENTS SHALL NOT BE RESPONSIBLE FOR THE ACCURACY OR COMPLETENESS OF SCANNED COPIES OF THIS PLAN SHEET.

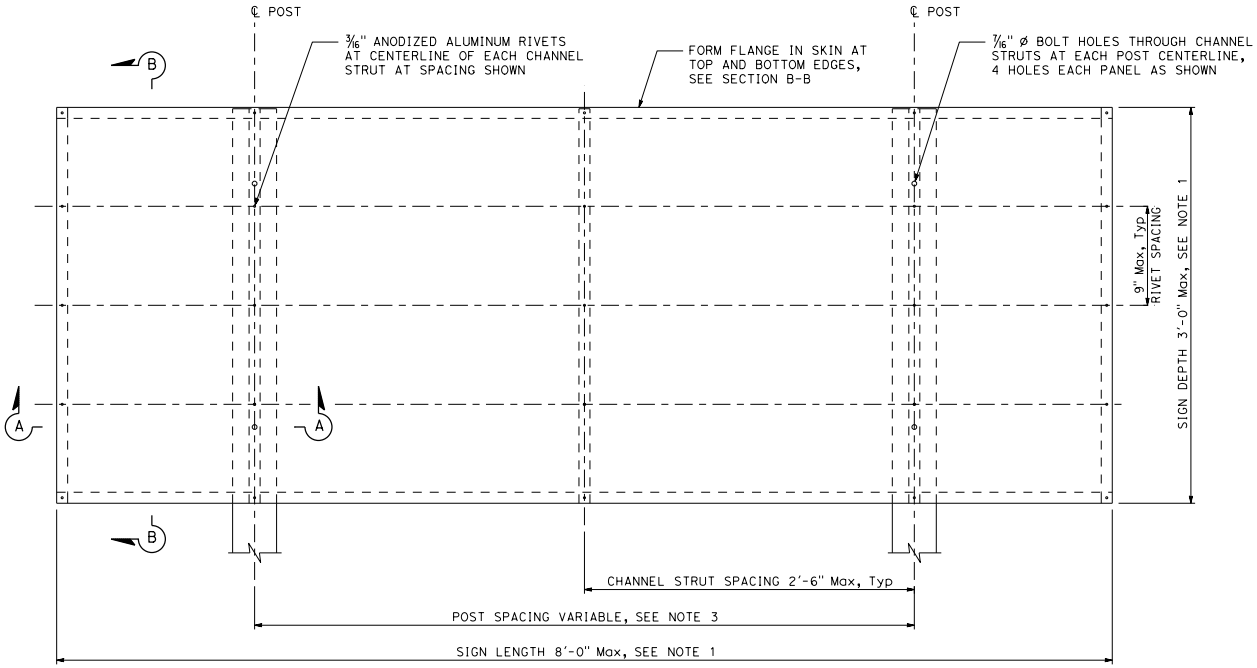

FACE VIEW OF FORMED PANEL

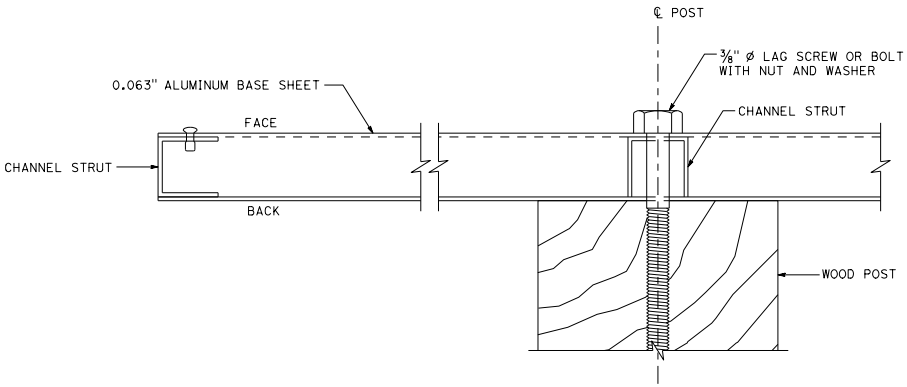

SECTION A-A

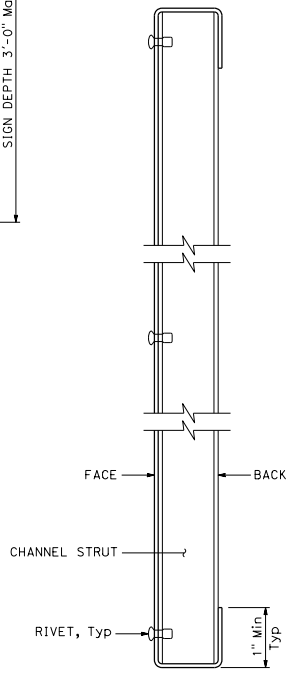

SECTION B-B

NOTES:

1. Sign size to be graduated in 6" increments, both vertically and horizontally. Area of sign not to exceed 20 square feet.
2. Channel strut extrusions shall be 1" x 1" x 1/16" aluminum alloy 6063-T6.
3. See Standard Plan RS2 for post spacing and mounting details.

STATE OF CALIFORNIA
DEPARTMENT OF TRANSPORTATION

ROADSIDE SIGN FORMED SINGLE SHEET ALUMINUM PANEL

NO SCALE

S89

2026 STANDARD PLAN S89

7-1-26

Return to Table of Contents

Dist	COUNTY	ROUTE	POST MILES TOTAL PROJECT	SHEET No.	TOTAL SHEETS

Mario Lozano
REGISTERED CIVIL ENGINEER

September 18, 2026
PLANS APPROVAL DATE

REGISTERED PROFESSIONAL ENGINEER
Mario Lozano-Cisneros
No. C94626
Exp. 3-31-27
CIVIL
STATE OF CALIFORNIA

THE STATE OF CALIFORNIA OR ITS OFFICERS OR AGENTS SHALL NOT BE RESPONSIBLE FOR THE ACCURACY OR COMPLETENESS OF SCANNED COPIES OF THIS PLAN SHEET.

PANEL DEPTH	DIMENSION A	DIMENSION B	DIMENSION D	TOTAL No. OF CHANNELS PER PANEL
4′-2″	1′-11¾″			3
5′-0″	2′-4¾″			3
5′-10″	1′-6¾″	2′-6″		4
6′-8″	1′-6¾″	1′-8″		5
7′-6″	1′-6¾″	2′-6″	1′-8″	5
8′-4″	1′-6¾″	2′-6″		5
9′-2″	1′-6¾″	1′-8″	2′-6″	6
10′-0″	1′-6¾″	2′-6″	1′-8″	6

LEGEND:

C - INDICATES LOCATION OF CHANNEL
BC - INDICATED LOCATION OF BOLT AND CHANNEL
* - THIS BOLT MAY BE OMITTED WHEN DEPTH IS 4′-2″

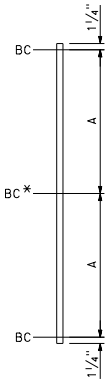

3 CHANNELS FOR
4′-2″ AND 5′-0″ DEPTH

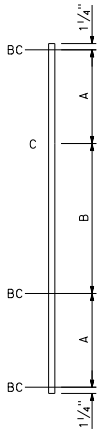

4 CHANNELS FOR
5′-10″ DEPTH

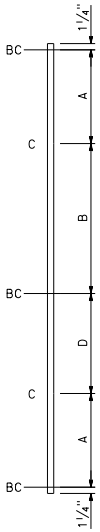

5 CHANNELS FOR
7′-6″ DEPTH

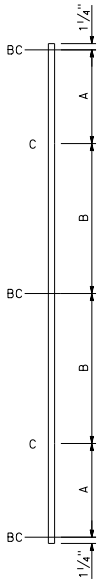

5 CHANNELS FOR
6′-8″ AND 8′-4″ DEPTH

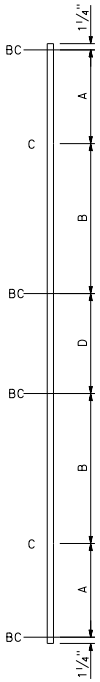

6 CHANNELS FOR
9′-2″ AND 10′-0″ DEPTH

STATE OF CALIFORNIA
DEPARTMENT OF TRANSPORTATION

CHANNEL AND BOLT HOLE LOCATION FOR OVERHEAD FORMED SIGN PANEL

NO SCALE

S90

7-1-26

2026 STANDARD PLAN S90

508

Return to Table of Contents

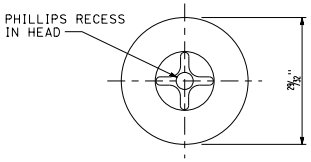

TRUSS HEAD BOLT

2024 Aluminum alloy per QQ-A-430 or ASTM B316
Anodize interstate green per MIL-A-8625

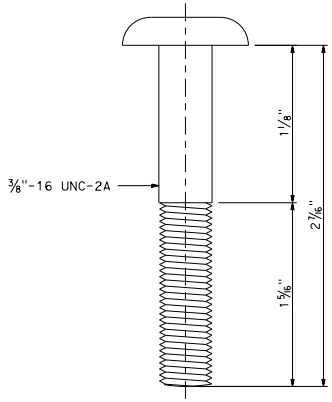

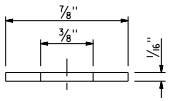

WASHER

Fiber/Nylon

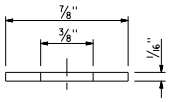

WASHER

2024 Aluminum alloy
Clear anodize per MIL-A-8625

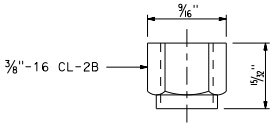

LOCKNUT WITH NYLON INSERT

6061-T6 or 2011-T3 Aluminum alloy or equivalent
Anodize per MIL-A-8625
Maximum torque - 60 in-lbs

MOUNTING HARDWARE QUANTITY CHART

SIGN LENGTH	SIGN DEPTH	NUMBER OF UNITS REQUIRED
8'-0"	4'-2"	8
10'-0" TO 12'-0"	4'-2"	12
14'-0" TO 16'-0"	4'-2"	16
18'-0" TO 20'-0"	4'-2"	20
22'-0" TO 24'-0"	4'-2"	24
26'-0" TO 28'-0"	4'-2"	28
30'-0" TO 32'-0"	4'-2"	32
34'-0" TO 36'-0"	4'-2"	36
38'-0" TO 40'-0"	4'-2"	40
42'-0" TO 44'-0"	4'-2"	44
46'-0" TO 48'-0"	4'-2"	48
8'-0"	5'-0" TO 8'-4"	12
10'-0" TO 12'-0"	5'-0" TO 8'-4"	18
14'-0" TO 16'-0"	5'-0" TO 8'-4"	24
18'-0" TO 20'-0"	5'-0" TO 8'-4"	30
22'-0" TO 24'-0"	5'-0" TO 8'-4"	36
26'-0" TO 28'-0"	5'-0" TO 8'-4"	42
30'-0" TO 32'-0"	5'-0" TO 8'-4"	48
34'-0" TO 36'-0"	5'-0" TO 8'-4"	54
38'-0" TO 40'-0"	5'-0" TO 8'-4"	60
42'-0" TO 44'-0"	5'-0" TO 8'-4"	66
46'-0" TO 48'-0"	5'-0" TO 8'-4"	72
8'-0"	9'-2" TO 10'-0"	16
10'-0" TO 12'-0"	9'-2" TO 10'-0"	24
14'-0" TO 16'-0"	9'-2" TO 10'-0"	32
18'-0" TO 20'-0"	9'-2" TO 10'-0"	40
22'-0" TO 24'-0"	9'-2" TO 10'-0"	48
26'-0" TO 28'-0"	9'-2" TO 10'-0"	56
30'-0" TO 32'-0"	9'-2" TO 10'-0"	64
34'-0" TO 36'-0"	9'-2" TO 10'-0"	72
38'-0" TO 40'-0"	9'-2" TO 10'-0"	80
42'-0" TO 44'-0"	9'-2" TO 10'-0"	88
46'-0" TO 48'-0"	9'-2" TO 10'-0"	96

Unit - 1 Truss head bolt, 1 Nylon insert locknut,
1 washer (Fiber/Nylon), 1 washer (Aluminum)

Dist	COUNTY	ROUTE	POST MILES TOTAL PROJECT	SHEET No.	TOTAL SHEETS

Mario Lozano
REGISTERED CIVIL ENGINEER

September 18, 2026
PLANS APPROVAL DATE

REGISTERED PROFESSIONAL ENGINEER
Mario Lozano-Cisneros
No. C94626
Exp. 3-31-27
CIVIL
STATE OF CALIFORNIA

THE STATE OF CALIFORNIA OR ITS OFFICERS OR AGENTS SHALL NOT BE RESPONSIBLE FOR THE ACCURACY OR COMPLETENESS OF SCANNED COPIES OF THIS PLAN SHEET.

STATE OF CALIFORNIA
DEPARTMENT OF TRANSPORTATION

OVERHEAD SIGN
FORMED SIGN PANEL
TYPE A-3 MOUNTING HARDWARE

NO SCALE

S91

2026 STANDARD PLAN S91

7-1-26

Return to Table of Contents

Dist	COUNTY	ROUTE	POST MILES TOTAL PROJECT	SHEET No.	TOTAL SHEETS

Mario Lozano
REGISTERED CIVIL ENGINEER

September 18, 2026
PLANS APPROVAL DATE

REGISTERED PROFESSIONAL ENGINEER Mario Lozano-Cisneros No. C94626 Exp. 3-31-27 CIVIL STATE OF CALIFORNIA

THE STATE OF CALIFORNIA OR ITS OFFICERS OR AGENTS SHALL NOT BE RESPONSIBLE FOR THE ACCURACY OR COMPLETENESS OF SCANNED COPIES OF THIS PLAN SHEET.

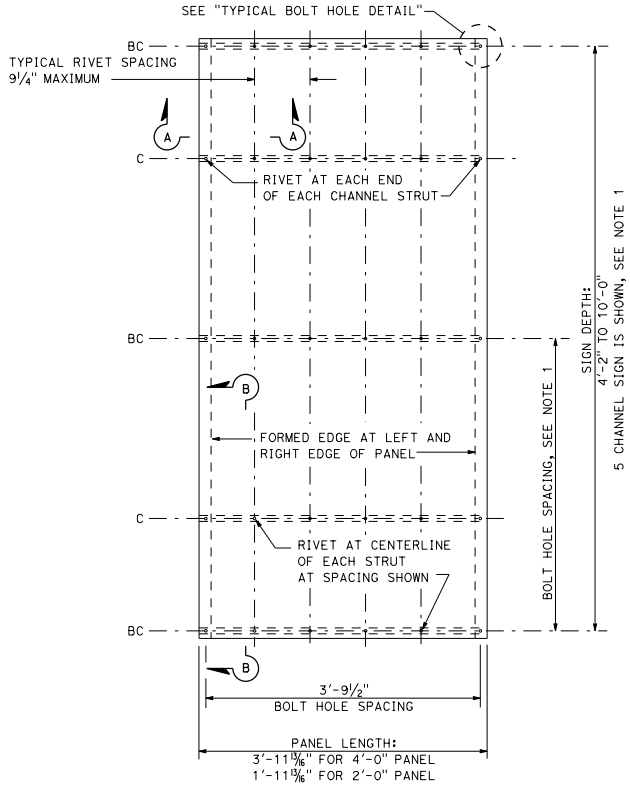

FACE VIEW OF FORMED PANEL

Single panel shown

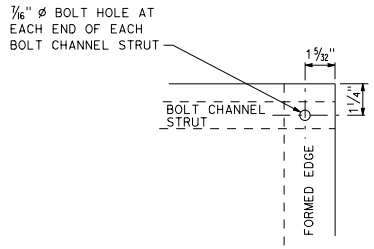

TYPICAL BOLT HOLE DETAIL

ABBREVIATIONS:

BC = Centerline of Bolt Channel Strut
C = Centerline of Channel Strut

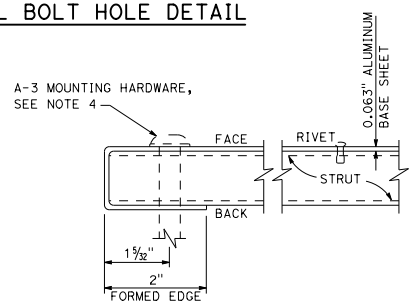

SECTION A-A

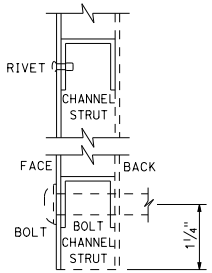

SECTION B-B

NOTES:

1. See Standard Plan S90 for location and configuration of struts.
2. Bolt channel and channel extrusions shall be 1" x 1" x 1/16" aluminum alloy 6063-T6.
3. See Standard Plan S21 for mounting details.
4. See Standard Plan S91 for A-3 mounting hardware.

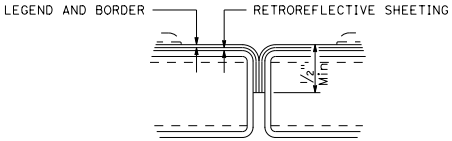

RETROREFLECTIVE SHEETING OVERLAP ON INTERIOR EDGES

Two panels shown

STATE OF CALIFORNIA
DEPARTMENT OF TRANSPORTATION

OVERHEAD SIGN FORMED SIGN PANEL

NO SCALE

S92

2026 STANDARD PLAN S92

7-1-26

Return to Table of Contents

Dist	COUNTY	ROUTE	POST MILES TOTAL PROJECT	SHEET No.	TOTAL SHEETS

Mario Lozano
REGISTERED CIVIL ENGINEER

September 18, 2026
PLANS APPROVAL DATE

REGISTERED PROFESSIONAL ENGINEER Mario Lozano-Cisneros No. C94626 Exp. 3-31-27 CIVIL STATE OF CALIFORNIA

THE STATE OF CALIFORNIA OR ITS OFFICERS OR AGENTS SHALL NOT BE RESPONSIBLE FOR THE ACCURACY OR COMPLETENESS OF SCANNED COPIES OF THIS PLAN SHEET.

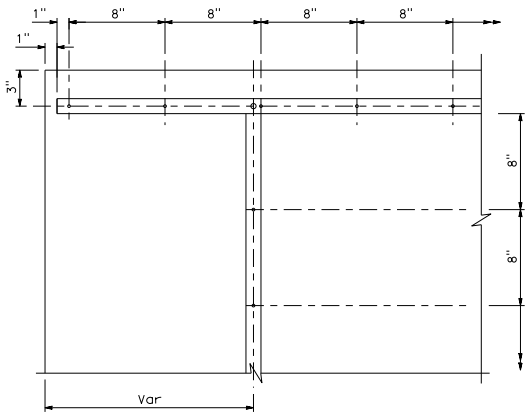

TYPICAL RIVET

DETAIL A

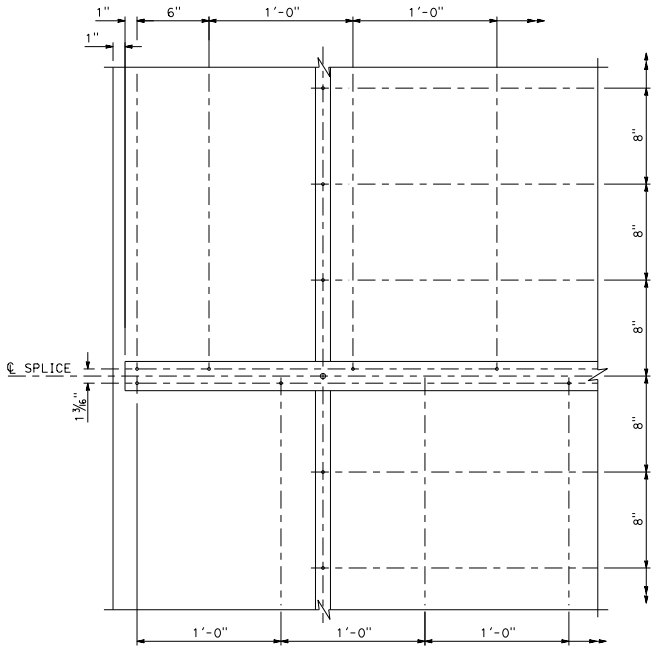

RIVET AT SPLICE

DETAIL B

CHANNEL SIZES

SIGN LENGTH	SIGN DEPTH	PANEL THICKNESS	No. OF HORIZONTAL MEMBERS	No. OF VERTICAL MEMBERS	Horiz MEMBER TYPE	Vert MEMBER TYPE
UP TO 3'-11"		0.063"	NO FRAME REQUIRED			
4'-0" TO 4'-7"		0.080"	NO FRAME REQUIRED			
4'-8" TO 5'-10"	1'-0" TO 2'-0"	0.063"	2		A	
	2'-1" TO 3'-0"	0.063"	2	2	A	A
	3'-1" TO 4'-0"	0.063"	2	3	A	A
	4'-1" TO 8'-0"	0.063"	3	3	B	A
6'-0" TO 6'-6"	1'-0" TO 2'-0"	0.063"	2		A	
	2'-1" TO 3'-0"	0.063"	2	2	A	A
	3'-1" TO 4'-0"	0.063"	2	3	A	A
	4'-1" TO 6'-0"	0.063"	3	3	B	B
	6'-1" TO 8'-0"	0.063"	3	3	C	C
6'-8" TO 7'-6"	1'-6" TO 4'-0"	0.080"	2	3	B	B
	4'-1" TO 6'-0"	0.080"	3	3	B	B
	6'-1" TO 8'-0"	0.080"	3	3	C	C
7'-8" TO 8'-6"	1'-6" TO 4'-0"	0.080"	2	3	B	B
	4'-1" TO 8'-0"	0.080"	3	3	C	C
8'-8" TO 9'-6"	1'-6" TO 4'-0"	0.080"	2	3	B	B
	4'-1" TO 8'-0"	0.080"	3	3	C	C
9'-8" TO 11'-0"	1'-6" TO 4'-0"	0.080"	2	3	C	C
	4'-1" TO 8'-0"	0.080"	3	3	C	C
	8'-1" TO 11'-0"	0.080"	4	3	C	C

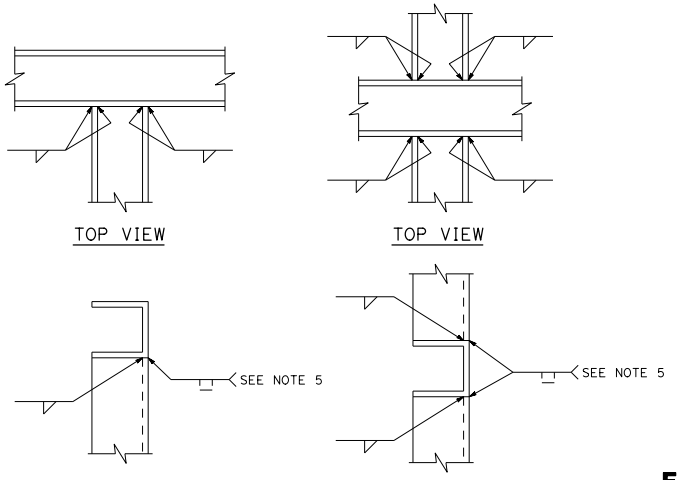

WELD DETAIL No. 1

WELD DETAIL No. 2

TYPICAL WELD DETAILS

NOTES:

1. Type A - 1¼" x 1¼" x ⅛" channel to be aluminum alloy 6063-T5.
2. Type B - 2⅜" x 1¼" x 3/16" channel to be aluminum alloy 6063-T6.
3. Type C - 2" x 2" x ¼" channel to be aluminum alloy 6063-T6.
4. 1¾" x 1½" x ⅛" rectangular tubing aluminum alloy 6063-T6 may be substituted for Types B and C, but more than one type of framing material used on one sign is unacceptable.
5. For rectangular tubing, weld all around and grind beads flush where weld contacts sign panel.

POST SPACING

SIGN LENGTH	CENTERLINE SPACING
4'-8" TO 5'-8"	3'-6"
5'-10" TO 6'-8"	4'-0"
6'-10" TO 7'-8"	4'-6"
7'-10" TO 8'-2"	5'-0"
8'-4" TO 8'-8"	5'-2"
8'-10" TO 9'-2"	5'-4"
9'-4" TO 9'-8"	5'-8"
9'-10" TO 10'-2"	6'-0"
10'-4" TO 10'-10"	6'-6"
10'-11" TO 11'-0"	7'-0"

STATE OF CALIFORNIA
DEPARTMENT OF TRANSPORTATION

FRAMING DETAILS FOR FRAMED SINGLE SHEET ALUMINUM SIGNS RECTANGULAR SHAPE

NO SCALE

2026 STANDARD PLAN S93

S93

7-1-26

Return to Table of Contents

Dist	COUNTY	ROUTE	POST MILES TOTAL PROJECT	SHEET No.	TOTAL SHEETS

Mario Lozano
REGISTERED CIVIL ENGINEER

September 18, 2026
PLANS APPROVAL DATE

REGISTERED PROFESSIONAL ENGINEER
Mario Lozano-Cisneros
No. C94626
Exp. 3-31-27
CIVIL
STATE OF CALIFORNIA

THE STATE OF CALIFORNIA OR ITS OFFICERS OR AGENTS SHALL NOT BE RESPONSIBLE FOR THE ACCURACY OR COMPLETENESS OF SCANNED COPIES OF THIS PLAN SHEET.

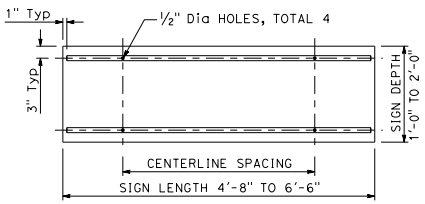

ROADSIDE SIGN DETAIL No. 1

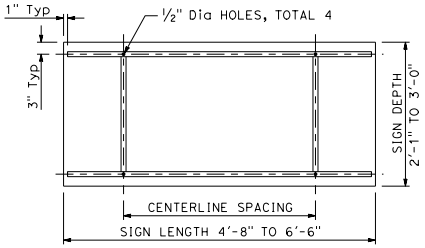

ROADSIDE SIGN DETAIL No. 2

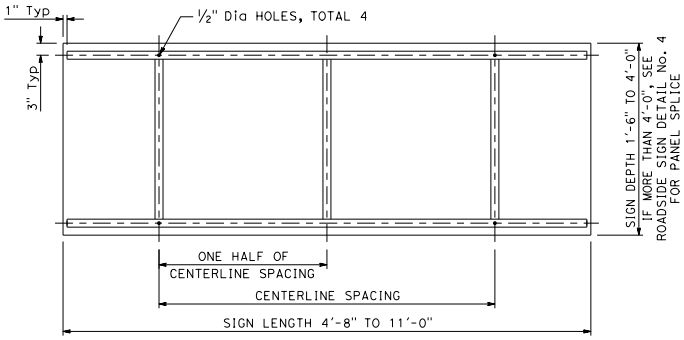

ROADSIDE SIGN DETAIL No. 3

NOTES:

1. See Standard Plan S93 for framing details.
2. All members welded at joints as shown on Standard Plan S93.

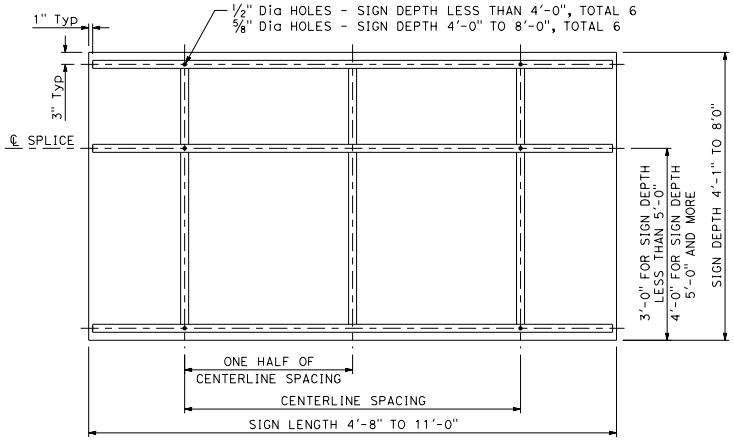

ROADSIDE SIGN DETAIL No. 4

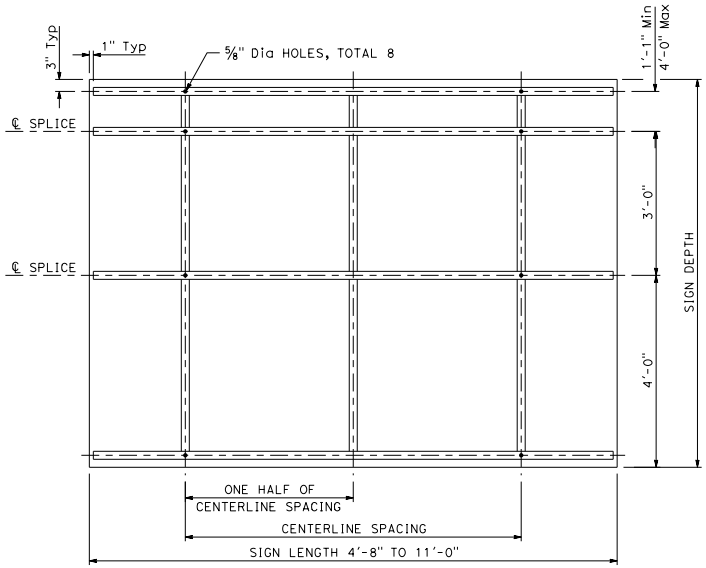

ROADSIDE SIGN DETAIL No. 5

STATE OF CALIFORNIA
DEPARTMENT OF TRANSPORTATION

ROADSIDE FRAMED SINGLE SHEET ALUMINUM SIGNS RECTANGULAR SHAPE

NO SCALE

S94

2026 STANDARD PLAN S94

7-1-26

Return to Table of Contents

Dist	COUNTY	ROUTE	POST MILES TOTAL PROJECT	SHEET No.	TOTAL SHEETS

Mario Lozano
REGISTERED CIVIL ENGINEER

September 18, 2026
PLANS APPROVAL DATE

REGISTERED PROFESSIONAL ENGINEER
Mario Lozano-Cisneros
No. C94626
Exp. 3-31-27
CIVIL
STATE OF CALIFORNIA

THE STATE OF CALIFORNIA OR ITS OFFICERS OR AGENTS SHALL NOT BE RESPONSIBLE FOR THE ACCURACY OR COMPLETENESS OF SCANNED COPIES OF THIS PLAN SHEET.

CHANNEL SIZES

SIGN SIZE	PANEL THICKNESS	FRAME TYPE
4'-0" x 4'-0"	0.063"	NO FRAME REQUIRED
4'-0" x 4'-0"	0.080"	NO FRAME REQUIRED
5'-0" x 5'-0"	0.080"	SEE ROADSIDE SIGN DETAIL No. 6
6'-0" x 6'-0"	0.080"	SEE ROADSIDE SIGN DETAIL No. 7
8'-0" x 8'-0"	0.080"	SEE ROADSIDE SIGN DETAIL No. 8

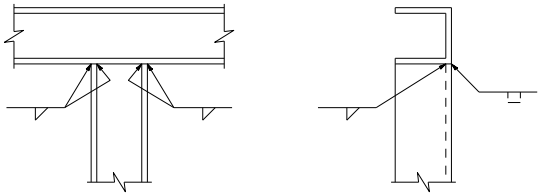

WELD DETAIL No. 3

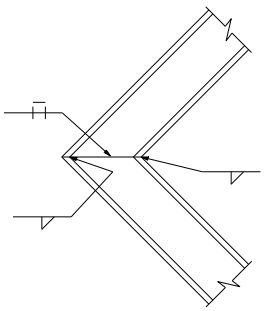

WELD DETAIL No. 4

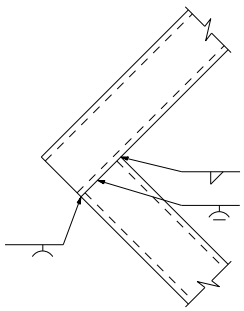

ALTERNATE WELD DETAIL No. 4A

Weld all around outside

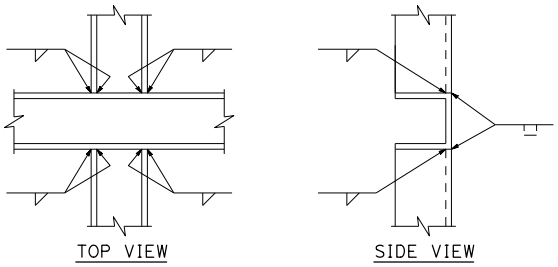

WELD DETAIL No. 5

TYPICAL WELD DETAILS

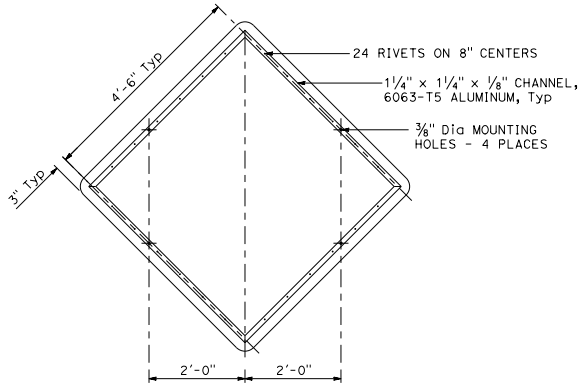

ROADSIDE SIGN DETAIL No. 6

Framing detail for 5'-0" x 5'-0" diamond.

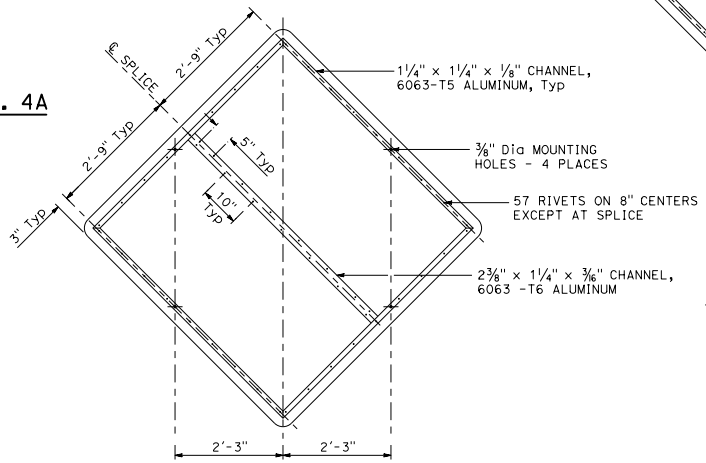

ROADSIDE SIGN DETAIL No. 7

Framing detail for 6'-0" x 6'-0" diamond.
Made from 2 - 3'-0" x 6'-0" panels,
spliced and braced by channels as shown.

NOTE:

1. All channel members welded at joints as shown on this plan.

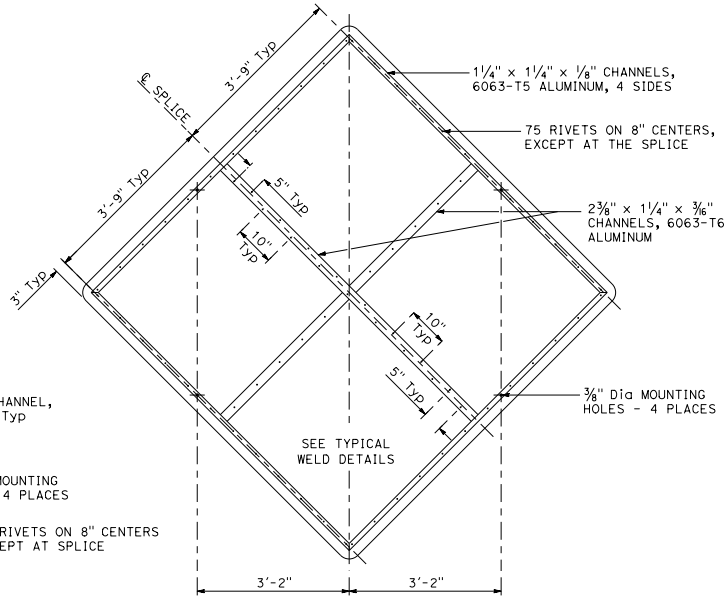

ROADSIDE SIGN DETAIL No. 8

Framing detail for 8'-0" x 8'-0" diamond.
Made from 2 - 4'-0" x 8'-0" panels,
spliced and braced by channels as shown.

STATE OF CALIFORNIA
DEPARTMENT OF TRANSPORTATION

ROADSIDE SINGLE SHEET ALUMINUM SIGNS DIAMOND SHAPE

NO SCALE

S95

7-1-26

2026 STANDARD PLAN S95

Return to Table of Contents

Dist	COUNTY	ROUTE	POST MILES TOTAL PROJECT	SHEET No.	TOTAL SHEETS

REGISTERED CIVIL ENGINEER

September 18, 2026
PLANS APPROVAL DATE

REGISTERED PROFESSIONAL ENGINEER
Mahesh Shrestha
No. C80133
Exp. 9-30-26
CIVIL
STATE OF CALIFORNIA

THE STATE OF CALIFORNIA OR ITS OFFICERS OR AGENTS SHALL NOT BE RESPONSIBLE FOR THE ACCURACY OR COMPLETENESS OF SCANNED COPIES OF THIS PLAN SHEET.

INSTRUCTIONS TO FABRICATOR

PROJECT PLANS SHOW:

1. Sign structure location.
2. Length of structure frame.
3. Panel size and locations on structure.
4. Walkway length for two post signs.
5. Post type and height to bottom of frame.
6. Base plate elevation.
7. Pedestal height and shape, if applicable.
8. Location of pile foundation.
9. Photoelectric unit location if required.

REFER TO THE FOLLOWING STANDARD PLANS FOR DETAILS NOT SHOWN ON PROJECT PLANS:

SHEET No.	SHEET NAME
S100	Overhead Signs-Versatile Truss, One and Two Post Type
ONE POST TYPE SHEETS	
S101	Overhead Signs-Versatile Truss, One Post Type, Truss Layout
S102	Overhead Signs-Versatile Truss, One Post Type, Steel Post Type and Truss Member Table
S103	Overhead Signs-Versatile Truss, One Post Type, Steel Post Base Plate and Anchorage Details
S104	Overhead Signs-Versatile Truss, One Post Type, CIDH Pile Foundation Details
S105	Overhead Signs-Versatile Truss, One Post Type, Concrete Pedestal with CIDH Pile Foundation Details
TWO POST TYPE SHEETS	
S106	Overhead Signs-Versatile Truss, Two Post Type, Truss Layout
S107	Overhead Signs-Versatile Truss, Two Post Type, Steel Post Type and Truss Member Table
S108	Overhead Signs-Versatile Truss, Two Post Type, Steel Post Base Plate and Anchorage Details
S109	Overhead Signs-Versatile Truss, Two Post Type, CIDH Pile Foundation Details
S110	Overhead Signs-Versatile Truss, Two Post Type, Concrete Pedestal with CIDH Pile Foundation Details
COMMOM ELEMENTS SHEETS	
S111	Overhead Signs-Versatile Truss, Truss Connection Details
S112	Overhead Signs-Versatile Truss, Chord Splice Details
S113	Overhead Signs-Versatile Truss, Truss To Steel Post Connection Details
S114	Overhead Signs-Versatile Truss, CIDH Pile Foundation with Inspection Pipes
S115	Overhead Signs-Versatile Truss, Walkway Details No. 1
S116	Overhead Signs-Versatile Truss, Walkway Details No. 2
S117	Overhead Signs-Versatile Truss, Walkway Details No. 3
S118	Overhead Signs-Versatile Truss, Walkway Safety Railing Details
S119	Overhead Signs-Versatile Truss, Sign Mounting Details Laminated Panel-Type A
S120	Overhead Signs-Versatile Truss, Removable Sign Panel Frames Details No. 1
S121	Overhead Signs-Versatile Truss, Removable Sign Panel Frames Details No. 2
S122	Overhead Signs-Versatile Truss, Exit Plaque Mounting Details
S123	Overhead Signs-Versatile Truss, CMS Mounting Details
S123B	Overhead Signs-Versatile Truss, Additional Details for CMS
S124	Overhead Signs-Versatile Truss, EMS and Flashing Beacon Details

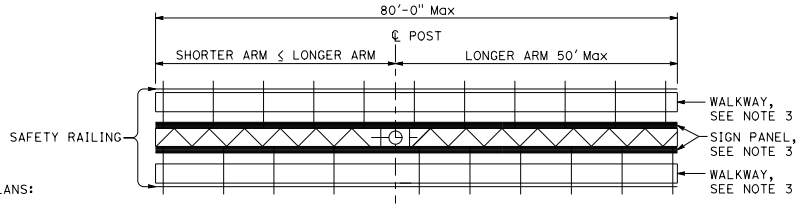

PLAN

UNBALANCED ONE POST TYPE MAXIMUM COVERAGE

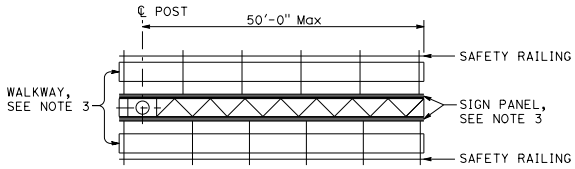

PLAN

CANTILEVER ONE POST TYPE MAXIMUM COVERAGE

NOTES:

1. Signs are shown and dimensioned looking in the direction of traffic. Double faced signs are shown and dimensioned looking ahead along stationing.
2. For Two Post Type, maximum cantilever length ≤ main span length/3.
3. For cantilever lengths ≤ 40'-0", sign panels and walkways may be placed on both sides of truss. For cantilever lengths > 40'-0" and ≤ 50'-0", sign panels and walkways may only be placed on one side of truss.
4. A single Changeable Message Sign may be placed anywhere on the truss. CMS and static sign panels may be placed on the same truss.
5. Refer to Standard Plan S123 for CMS mounting details.
6. Place walkway and safety railing on truss only when called out on the project plans. When required, walkway to be continuous for entire length of frame for one post signs. For two post signs, see Project Plans. Safety railing to run the entire length of walkway.
7. Thread locking nuts or locking washers shall be used for all connections, unless noted otherwise.
8. All high strength bolts are to be snug tightened unless otherwise noted on the plans.
9. All welds are continuous unless otherwise noted on the plans.

DESIGN NOTES:

WIND LOADING:
Wind loading per AASHTO Standard Specifications for Structural Supports for Highway Signs, Luminaries, and Traffic Signals, 6th Edition, 2013 with 2015 interim revisions.

Design wind speed (V) = 100 mph
Importance factor (Ir) = 1.0
Velocity conversion factor (Cv) = 1.0
Height and exposure factor (Kz) = 1.18
Gust effect factor (G) = 1.14

WALKWAY LOADING:
Dead load plus 500 lb concentrated live load.

CMS LOADING:

CMS Load Case	Max Size (W x H x D)	Max Weight (lb)	Max Ave Weight Per Unit Length
Case 1	310" x 90" x 18"	2400	100 lb/ft
Case 2	175" x 60" x 16"	2000	140 lb/ft

MATERIALS & UNIT STRESSES:

Structural Steel:	Fy = 50 ksi
Steel Posts:	Dia ≤ 24" Fy = 35 ksi
	Dia > 24" Fy = 50 ksi
Base Plates:	Fy = 50 ksi
Anchor Bolts:	Fy = 55 ksi
Reinforced Concrete:	fy = 60 ksi
	f'c = 4 ksi

SOIL PARAMETERS FOR CIDH FOUNDATION:
Minimum Soil Shear Strength: 1.5 ksf (cohesive soils)
Minimum Soil Friction Angle: 30° (non-cohesive soils)
Minimum Unit weight of soil: 120 pcf (non-cohesive soils)

MINIMUM CLEARANCE:
Vertical roadway clearance 18'-6" (bottom of frame/sign/CMS/walkway)

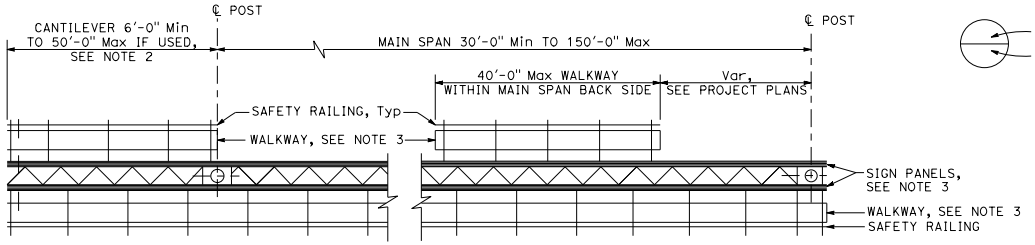

PLAN

TWO POST TYPE WITH CANTILEVER MAXIMUM COVERAGE

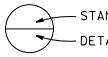

STATE OF CALIFORNIA
DEPARTMENT OF TRANSPORTATION

OVERHEAD SIGNS-VERSATILE TRUSS ONE AND TWO POST TYPE

NO SCALE

S100

2026 STANDARD PLAN S100

7-1-26

Return to Table of Contents

Dist	COUNTY	ROUTE	POST MILES TOTAL PROJECT	SHEET No.	TOTAL SHEETS

REGISTERED CIVIL ENGINEER

September 18, 2026
PLANS APPROVAL DATE

REGISTERED PROFESSIONAL ENGINEER
Mahesh Shrestha
No. C80133
Exp. 9-30-26
CIVIL
STATE OF CALIFORNIA

THE STATE OF CALIFORNIA OR ITS OFFICERS OR AGENTS SHALL NOT BE RESPONSIBLE FOR THE ACCURACY OR COMPLETENESS OF SCANNED COPIES OF THIS PLAN SHEET.

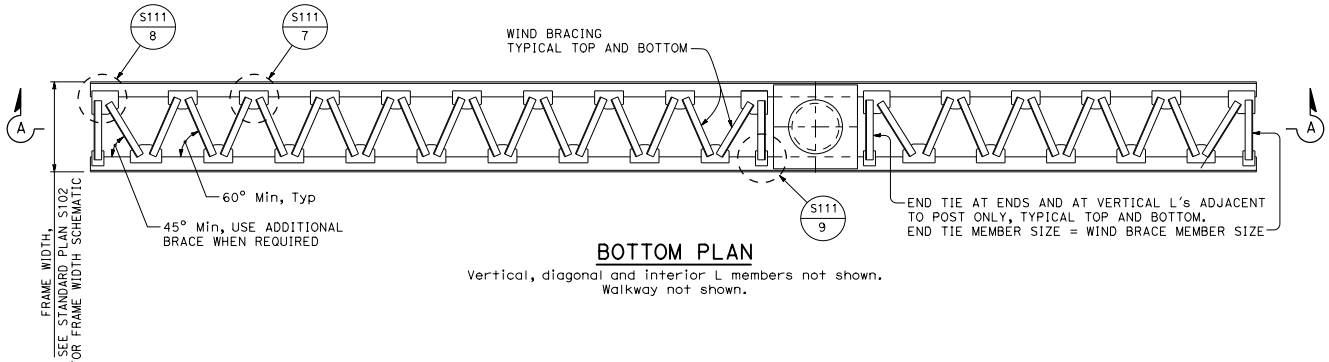

BOTTOM PLAN

Vertical, diagonal and interior L members not shown.
Walkway not shown.

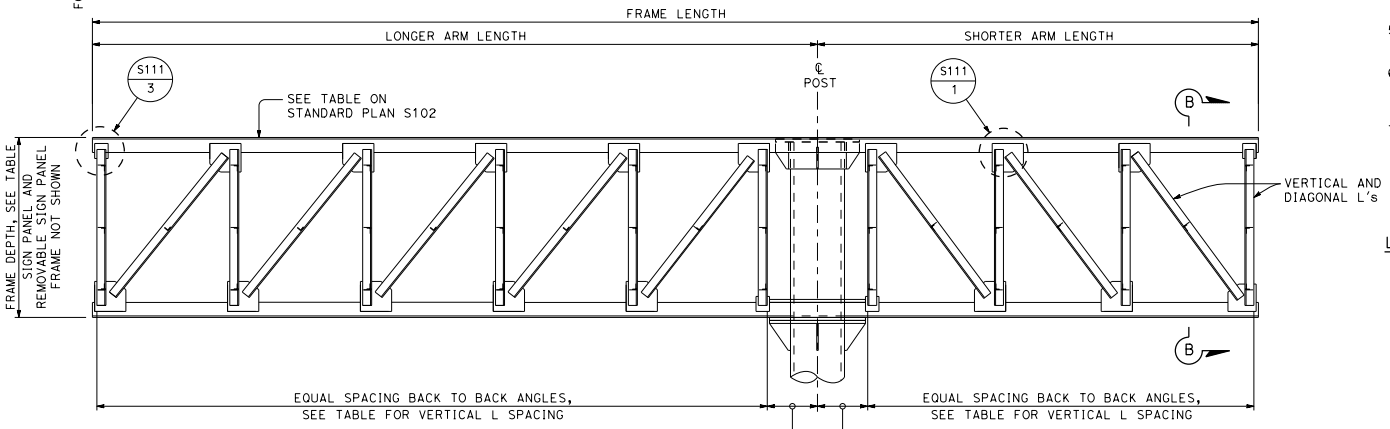

SECTION A-A

Walkway and wind bracing not shown

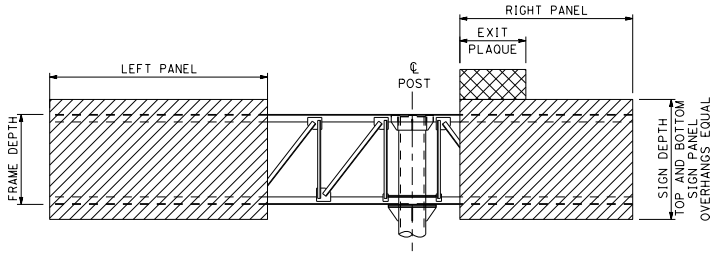

SIGN AND EXIT PLAQUE PLACEMENT

NOTE:
Equal sign panel overhangs apply to sign panels only. The exit plaque is mounted above sign panels and the walkway is mounted below the sign panels, when used.

NOTES:

1. For connection of frame to post, see Standard Plan S113.
2. For walkway details, see Standard Plans S115, S116, and S117.
3. For walkway length, see Standard Plan S100.
4. Minimum length of frame varies by frame depth, see Standard Plan S102.
5. For interior members, refer to Typical Section B-B on Standard Plan S111.
6. A single exit plaque may be placed above the sign, at any location on the truss. Maximum exit plaque length = 16'-0". Maximum exit plaque depth = 5'-0".
7. See Standard Plan S122 for Exit Plaque Mounting Details.

LEGEND:

SIGN PANEL

EXIT PLAQUE

TRUSS FRAME DEPTH AND VERTICAL ANGLE SPACING TABLE

MAXIMUM SIGN PANEL DEPTH	FRAME DEPTH	MAXIMUM VERTICAL L SPACING
80"	60"	45"
180"	72"	54"
240"	120"	90"

STATE OF CALIFORNIA
DEPARTMENT OF TRANSPORTATION

OVERHEAD SIGNS-VERSATILE TRUSS ONE POST TYPE TRUSS LAYOUT

NO SCALE

S101

2026 STANDARD PLAN S101

7-1-26

Return to Table of Contents

Dist	COUNTY	ROUTE	POST MILES TOTAL PROJECT	SHEET No.	TOTAL SHEETS

REGISTERED CIVIL ENGINEER

September 18, 2026

PLANS APPROVAL DATE

REGISTERED PROFESSIONAL ENGINEER Mahesh Shrestha No. C80133 Exp. 9-30-26 CIVIL STATE OF CALIFORNIA

THE STATE OF CALIFORNIA OR ITS OFFICERS OR AGENTS SHALL NOT BE RESPONSIBLE FOR THE ACCURACY OR COMPLETENESS OF SCANNED COPIES OF THIS PLAN SHEET.

TRUSS MEMBER TABLE

SIGN PANEL DEPTH ≤ 80"

LONGER ARM LENGTH L	FRAME DEPTH	ANGLE MEMBER SIZE AND MINIMUM OVERLAP LENGTH TO GUSSET PLATE								
		CHORD	VERTICAL	L_V	DIAGONAL	L_d	WIND BRACE	L_W	INTERIOR	L_i
10'-0" ≤ L ≤ 20'-0"	60"	L4 x 4 x 3/8	L3 x 2 x 3/8	3	L2 1/2 x 2 1/2 x 1/4	3	L2 1/2 x 2 1/2 x 1/4	3	L2 1/2 x 2 1/2 x 1/4	3
20'-0" < L ≤ 30'-0"	60"	L5 x 5 x 1/2	L3 x 2 x 1/2	3	L3 x 3 x 3/8	4	L2 1/2 x 2 1/2 x 1/4	3	L2 1/2 x 2 1/2 x 1/4	3
30'-0" < L ≤ 40'-0"	60"	L5 x 5 x 1/2	L5 x 3 1/2 x 1/2	3	L4 x 4 x 1/2	4	L2 1/2 x 2 1/2 x 1/4	4	L2 1/2 x 2 1/2 x 1/4	3
40'-0" < L ≤ 50'-0"	60"	L5 x 5 x 1/2	L5 x 5 x 1/2	4	L5 x 5 x 1/2	4	L3 x 3 x 5/16	4	L2 1/2 x 2 1/2 x 1/4	3

80" < SIGN PANEL DEPTH ≤ 180"

LONGER ARM LENGTH L	FRAME DEPTH	ANGLE MEMBER SIZE AND MINIMUM OVERLAP LENGTH TO GUSSET PLATE								
		CHORD	VERTICAL	L_V	DIAGONAL	L_d	WIND BRACE	L_W	INTERIOR	L_i
15'-0" ≤ L ≤ 20'-0"	72"	L5 x 5 x 1/2	L3 x 2 x 3/8	4	L3 x 3 x 3/8	4	L2 1/2 x 2 1/2 x 1/4	4	L2 1/2 x 2 1/2 x 1/4	3
20'-0" < L ≤ 30'-0"	72"	L5 x 5 x 1/2	L3 x 3 x 3/8	3	L4 x 4 x 1/2	4	L2 1/2 x 2 1/2 x 3/8	4	L2 1/2 x 2 1/2 x 1/4	3
30'-0" < L ≤ 40'-0"	72"	L6 x 6 x 5/8	L5 x 3 x 1/2	3	L4 x 4 x 1/2	5	L3 x 3 x 3/8	5	L3 x 3 x 5/16	3
40'-0" < L ≤ 50'-0"	72"	L6 x 6 x 3/4	L5 x 3 1/2 x 3/4	3	L5 x 5 x 1/2	5	L4 x 3 x 3/8	5	L3 x 3 x 5/16	3

180" < SIGN PANEL DEPTH ≤ 240"

LONGER ARM LENGTH L	FRAME DEPTH	ANGLE MEMBER SIZE AND MINIMUM OVERLAP LENGTH TO GUSSET PLATE								
		CHORD	VERTICAL	L_V	DIAGONAL	L_d	WIND BRACE	L_W	INTERIOR	L_i
20'-0"	120"	L6 x 6 x 5/8	L3 x 3 x 3/8	4	L5 x 5 x 1/2	3	L2 1/2 x 2 1/2 x 1/4	3	L2 1/2 x 2 1/2 x 1/4	3
20'-0" < L ≤ 30'-0"	120"	L6 x 6 x 5/8	L4 x 4 x 3/8	4	L5 x 5 x 1/2	4	L3 x 3 x 3/8	5	L3 x 3 x 5/16	3
30'-0" < L ≤ 40'-0"	120"	L6 x 6 x 1	L5 x 3 x 1/2	3	L5 x 5 x 1/2	4	L3 x 3 x 3/8	5	L3 x 3 x 5/16	3
40'-0" < L ≤ 50'-0"	120"	L6 x 6 x 1	L5 x 3 x 1/2	3	L5 x 5 x 1/2	5	L4 x 3 x 3/8	5	L3 x 3 x 5/16	3

NOTE: All table dimensions are given in inches, unless otherwise noted.

POST SELECTION TABLE

SIGN PANEL DEPTH D	LONGER ARM LENGTH L	POST TYPE BY POST CLEAR HEIGHT			
		≤ 16 ft	≤ 20 ft	≤ 24 ft	≤ 28 ft
D ≤ 80"	20'-0"	1A	1A	1A	1B
	20'-0" < L ≤ 30'-0"	1B	1B	1D	1D
	30'-0" < L ≤ 40'-0"	1C	1D	1D	1F
	40'-0" < L ≤ 50'-0"	1F	1F	1F	1F
80" < D ≤ 100"	20'-0"	1A	1A	1B	1C
	20'-0" < L ≤ 30'-0"	1B	1D	1D	1E
	30'-0" < L ≤ 40'-0"	1D	1D	1F	1F
	40'-0" < L ≤ 50'-0"	1F	1F	1F	1F
100" < D ≤ 120"	20'-0"	1A	1B	1C	1C
	20'-0" < L ≤ 30'-0"	1C	1D	1E	1F
	30'-0" < L ≤ 40'-0"	1D	1F	1F	1F
	40'-0" < L ≤ 50'-0"	1F	1F	1F	1F
120" < D ≤ 150"	20'-0"	1B	1C	1D	1D
	20'-0" < L ≤ 30'-0"	1D	1E	1F	1F
	30'-0" < L ≤ 40'-0"	1F	1F	1F	1G
	40'-0" < L ≤ 50'-0"	1F	1F	1G	1G
150" < D ≤ 180"	20'-0"	1B	1C	1D	1D
	20'-0" < L ≤ 30'-0"	1E	1F	1F	1F
	30'-0" < L ≤ 40'-0"	1F	1G	1G	1G
	40'-0" < L ≤ 50'-0"	1F	1G	1G	1G
180" < D ≤ 210"	20'-0"	1D	1D	1E	1F
	20'-0" < L ≤ 30'-0"	1F	1F	1G	1G
	30'-0" < L ≤ 40'-0"	1G	1G	1G	1G
	40'-0" < L ≤ 50'-0"	1G	1G	1G	1H
210" < D ≤ 240"	20'-0"	1D	1E	1F	1F
	20'-0" < L ≤ 30'-0"	1F	1G	1G	1G
	30'-0" < L ≤ 40'-0"	1G	1G	1G	1H
	40'-0" < L ≤ 50'-0"	1H	1H	1H	1H

POST TYPE TABLE

POST TYPE	DIAMETER	Min NOMINAL THICKNESS
1A	16"	1.218"
1B	18"	1.156"
1C	20"	1.031"
1D	22"	1.125"
1E	24"	0.969"
1F	30"	0.625"
1G	30"	1"
1H	36"	1"

NOTES:

1. Shorter arm member sizes shall match the member sizes selected for the longer arm.
2. Post clear height is measured to underside of bottom truss chord.
3. Refer to Standard Plan S111 for connection details.
4. Minimum overlap lengths to gusset plates (Lv, Ld, Lw, and Li) are in inches.

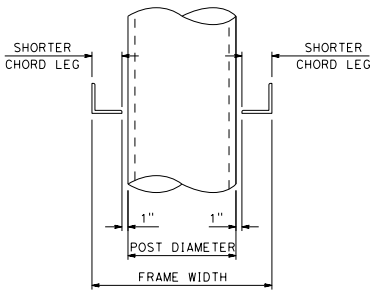

FRAME WIDTH SCHEMATIC

STATE OF CALIFORNIA
DEPARTMENT OF TRANSPORTATION

OVERHEAD SIGNS-VERSATILE TRUSS ONE POST TYPE STEEL POST TYPE AND TRUSS MEMBER TABLE

NO SCALE

S102

2026 STANDARD PLAN S102

7-1-26

Return to Table of Contents

Dist	COUNTY	ROUTE	POST MILES TOTAL PROJECT	SHEET No.	TOTAL SHEETS

REGISTERED CIVIL ENGINEER

September 18, 2026

PLANS APPROVAL DATE

REGISTERED PROFESSIONAL ENGINEER — Mahesh Shrestha — No. C80133 — Exp. 9-30-26 — CIVIL — STATE OF CALIFORNIA

THE STATE OF CALIFORNIA OR ITS OFFICERS OR AGENTS SHALL NOT BE RESPONSIBLE FOR THE ACCURACY OR COMPLETENESS OF SCANNED COPIES OF THIS PLAN SHEET.

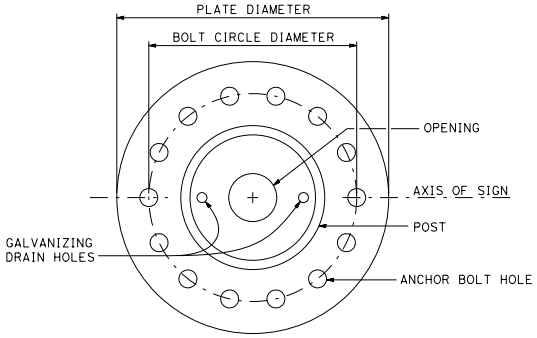

BASE PLATE DETAILS

SINGLE POST TYPE

14 bolt base plate depicted, others similar.

BASE PLATE AND ANCHOR BOLT DIMENSIONS

	BASE PLATE			ANCHOR BOLTS				
POST TYPE	PLATE THICKNESS	PLATE DIAMETER	OPENING DIAMETER	NUMBER OF BOLTS	BOLT DIAMETER	BOLT LENGTH	BOLT HOLE DIAMETER	BOLT CIRCLE DIAMETER
1A	3½"	2'-7"	5"	14	1¾"	5'-0"	2"	2'-0"
1B	3½"	2'-10"	6"	14	2"	5'-0"	2¼"	2'-2"
1C	3"	3'-0"	6"	16	2"	5'-0"	2¼"	2'-4"
1D	3½"	3'-2"	7"	16	2"	5'-0"	2¼"	2'-6"
1E	3"	3'-6"	7½"	18	2"	5'-0"	2¼"	2'-10"
1F	3"	4'-0"	9"	20	2"	5'-0"	2¼"	3'-4"
1G	3½"	4'-2"	9"	20	2½"	5'-0"	2¾"	3'-4"
1H	3½"	4'-8"	11"	24	2½"	5'-0"	2¾"	3'-10"

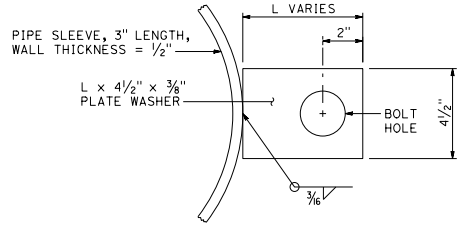

PLATE WASHER DETAIL

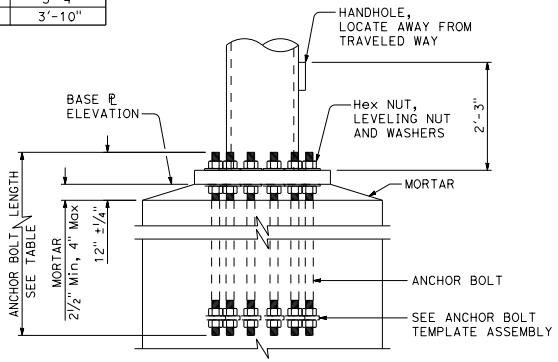

POST AND ANCHORAGE DETAIL

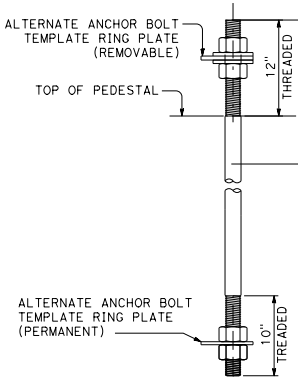

ALTERNATE ANCHOR BOLT TEMPLATE ASSEMBLY

NOTE: One bolt shown only. Other bolts same configuration around ring plate.

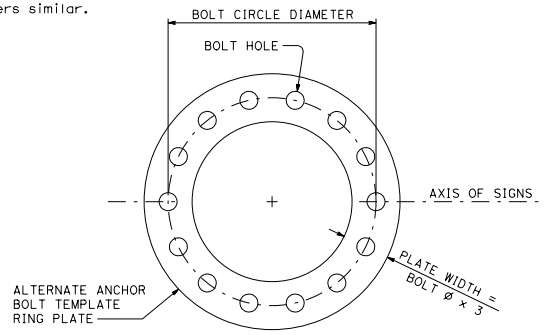

ALTERNATE ANCHOR BOLT TEMPLATE

14 bolt template depicted. Others similar.

NOTE: Permanent plate thickness = ¾", Removable plate thickness = ½"

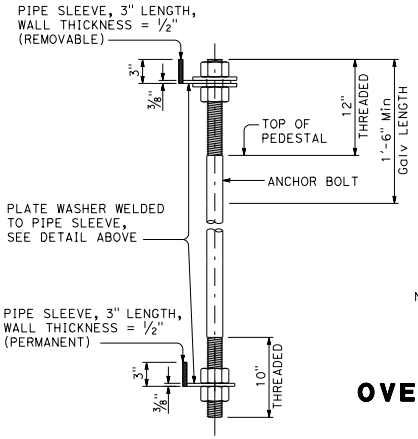

ANCHOR BOLT TEMPLATE ASSEMBLY

NOTE: One bolt shown only. Other bolts same configuration around pipe sleeve.

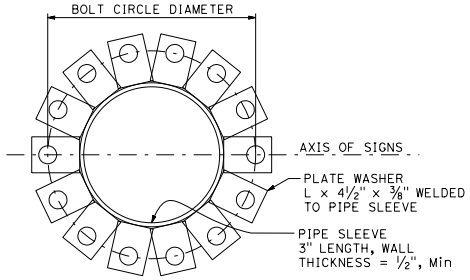

ANCHOR BOLT TEMPLATE

14 bolt template depicted, others similar.

NOTE: Template to match base plate anchor bolt pattern. Pipe sleeve diameter same as post type diameter.

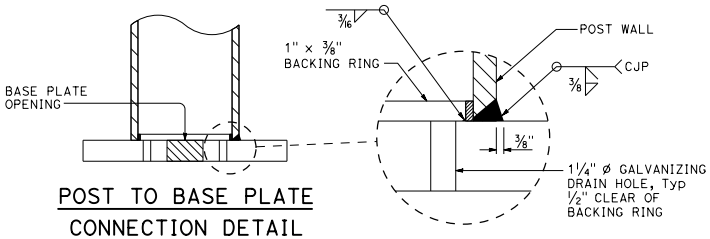

POST TO BASE PLATE CONNECTION DETAIL

STATE OF CALIFORNIA
DEPARTMENT OF TRANSPORTATION

OVERHEAD SIGNS-VERSATILE TRUSS ONE POST TYPE STEEL POST BASE PLATE AND ANCHORAGE DETAILS

NO SCALE

S103

2026 STANDARD PLAN S103

7-1-26

Return to Table of Contents

Dist	COUNTY	ROUTE	POST MILES TOTAL PROJECT	SHEET No.	TOTAL SHEETS

REGISTERED CIVIL ENGINEER

September 18, 2026
PLANS APPROVAL DATE

REGISTERED PROFESSIONAL ENGINEER
Mahesh Shrestha
No. C80133
Exp. 9-30-26
CIVIL
STATE OF CALIFORNIA

THE STATE OF CALIFORNIA OR ITS OFFICERS OR AGENTS SHALL NOT BE RESPONSIBLE FOR THE ACCURACY OR COMPLETENESS OF SCANNED COPIES OF THIS PLAN SHEET.

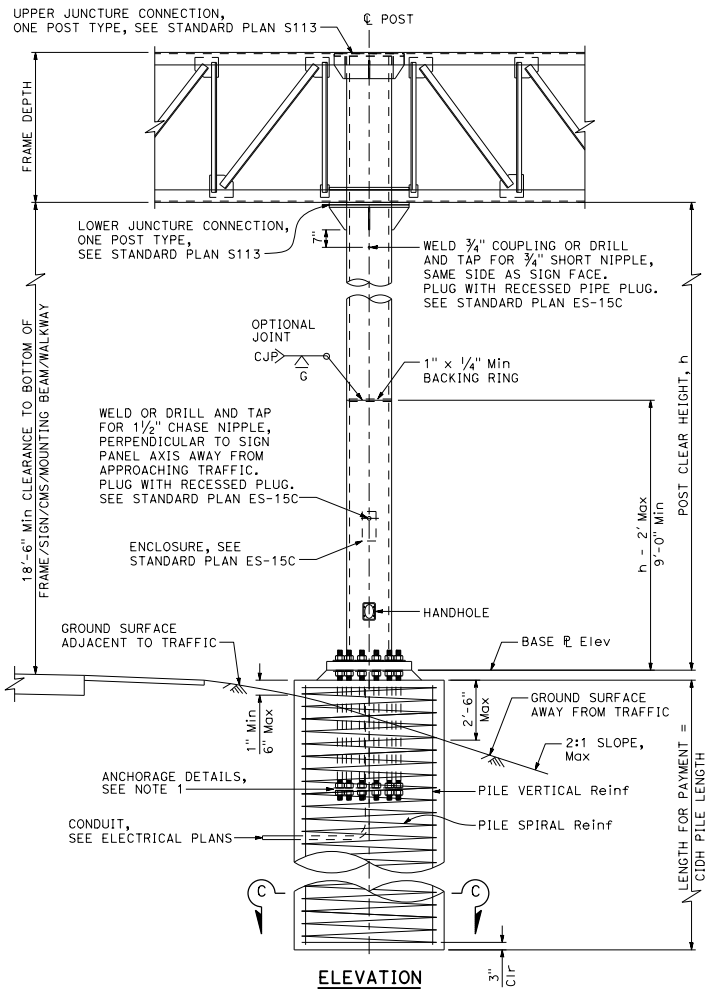

ELEVATION

CIDH in fill-slope depicted

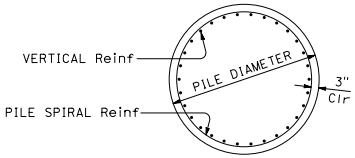

SECTION C-C

See Note 10

CIDH CONCRETE PILE TABLE

POST TYPE	DIAMETER	VERTICAL BAR SIZE	TOTAL NUMBER OF BARS	SPIRAL BAR SIZE	SPIRAL PITCH	MINIMUM CIDH PILE LENGTH
1A	5'-0"	#10	30	#6	5"	22'-0"
1B	5'-0"	#10	30	#6	5"	22'-0"
1C	5'-0"	#10	30	#6	5"	22'-0"
1D	5'-0"	#10	30	#6	5"	22'-0"
1E	5'-0"	#10	32	#6	5"	24'-0"
1F	5'-0"	#10	36	#6	5"	27'-0"
1G	5'-0"	#10	36	#6	4"	30'-0"
1H	5'-6"	#10	40	#6	4"	32'-0"

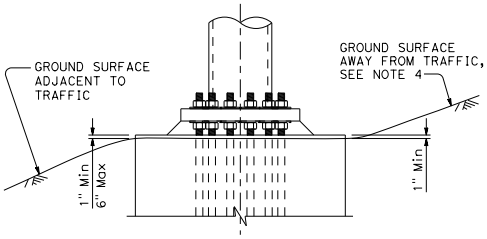

CIDH IN CUT-SLOPE

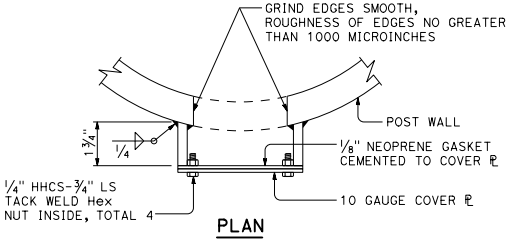

PLAN

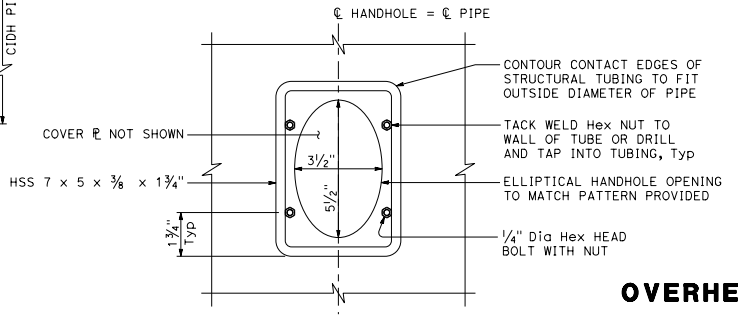

ELEVATION

TYPICAL DETAILS OF HANDHOLE AND COVER

NOTES:

1. For anchorage details, see Standard Plan S103.
2. For base ℙ elevation, see Project Plans.
3. Prior to erection of the post, backfill which is equivalent to the surrounding material shall be in place.
4. Slope stabilization required when indicated on the Project Plans.
5. For drain holes and central void in mortar, see Standard Plan ES-6B Detail N.
6. Refer to Standard Plan S102 for post type table.
7. Use pedestal with CIDH pile foundation when shown on the Project Plans. See Standard Plan S105.
8. On single post sign structures, the post shall be raked out of plumb, with the use of the leveling nuts to make the bottom of the sign frame level.
9. At final position of post all top and bottom nuts shall be tightened against base plate.
10. For CIDH pile foundation with inspection pipes, see Standard Plan S114.
11. Maximum electrical conduit diameter is 3".

STATE OF CALIFORNIA
DEPARTMENT OF TRANSPORTATION

OVERHEAD SIGNS-VERSATILE TRUSS ONE POST TYPE CIDH PILE FOUNDATION DETAILS

NO SCALE

S104

7-1-26

Return to Table of Contents

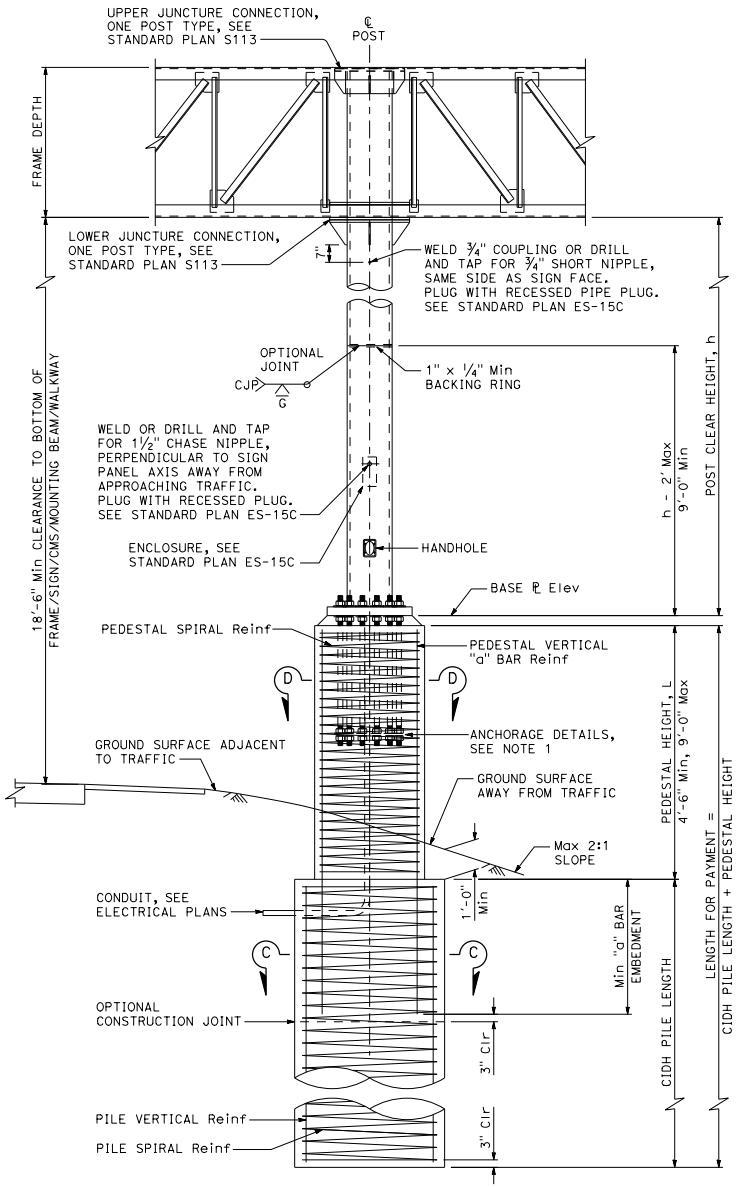

ELEVATION

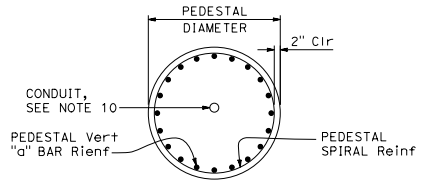

SECTION D-D
ROUND PEDESTAL

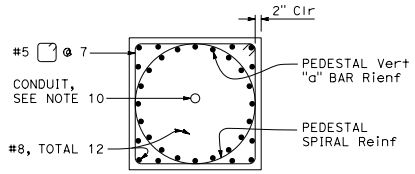

SECTION D-D
SQUARE PEDESTAL

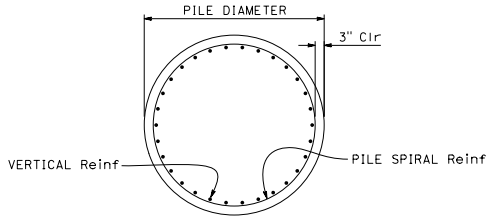

SECTION C-C
See Note 9

NOTES:

1. For anchorage details, see Standard Plan S103.
2. For base ℄ elevation, see Project Plans.
3. Prior to erection of the post, backfill which is equivalent to the surrounding material shall be in place.
4. For pedestal height and pedestal shape, see Project Plans.
5. Refer to Standard Plan S104 for CIDH pile foundation details when a pedestal is not indicated in the Project Plans.
6. Refer to Standard Plan S104 for additional details and notes not shown on this sheet.
7. For drain holes and central void in mortar, see Standard Plan ES-6B Detail N.
8. Refer to Standard Plan S102 for post type table.
9. For CIDH pile foundation with inspection pipes, see Standard Plan S114.
10. Maximum electrical conduit diameter is 3".

CONCRETE PEDESTAL AND CIDH CONCRETE PILE TABLE

POST TYPE	CONCRETE PEDESTAL							CIDH CONCRETE PILE					
	ROUND PEDESTAL DIAMETER	SQUARE PEDESTAL SIDES LENGTH	VERTICAL "a" BAR SIZE	NUMBER OF VERTICAL "a" BARS	SPIRAL BAR SIZE	SPIRAL PITCH	Min "a" BAR EMBEDMENT	DIAMETER	VERTICAL BAR SIZE	TOTAL NUMBER OF VERTICAL BARS	SPIRAL BAR SIZE	SPIRAL PITCH	MINIMUM CIDH PILE LENGTH
1A	3'-6"	3'-6"	#8	18	#5	3½"	54"	5'-0"	#10	30	#6	5"	20'-0"
1B	3'-8"	3'-8"	#8	20	#5	3½"	54"	5'-0"	#10	30	#6	5"	20'-0"
1C	3'-10"	3'-10"	#9	18	#5	3½"	72"	5'-0"	#10	30	#6	5"	20'-0"
1D	4'-0"	4'-0"	#9	22	#5	3½"	72"	5'-0"	#10	30	#6	5"	20'-0"
1E	4'-4"	4'-4"	#9	24	#5	3½"	72"	5'-0"	#10	32	#6	5"	22'-0"

Dist	COUNTY	ROUTE	POST MILES TOTAL PROJECT	SHEET No.	TOTAL SHEETS

REGISTERED CIVIL ENGINEER

September 18, 2026
PLANS APPROVAL DATE

REGISTERED PROFESSIONAL ENGINEER
Mahesh Shrestha
No. C80133
Exp. 9-30-26
CIVIL
STATE OF CALIFORNIA

THE STATE OF CALIFORNIA OR ITS OFFICERS OR AGENTS SHALL NOT BE RESPONSIBLE FOR THE ACCURACY OR COMPLETENESS OF SCANNED COPIES OF THIS PLAN SHEET.

STATE OF CALIFORNIA
DEPARTMENT OF TRANSPORTATION

OVERHEAD SIGNS-VERSATILE TRUSS ONE POST TYPE CONCRETE PEDESTAL WITH CIDH PILE FOUNDATION DETAILS

NO SCALE

S105

2026 STANDARD PLAN S105

7-1-26

Return to Table of Contents

Dist	COUNTY	ROUTE	POST MILES TOTAL PROJECT	SHEET No.	TOTAL SHEETS

REGISTERED CIVIL ENGINEER

September 18, 2026
PLANS APPROVAL DATE

REGISTERED PROFESSIONAL ENGINEER
Mahesh Shrestha
No. C80133
Exp. 9-30-26
CIVIL
STATE OF CALIFORNIA

THE STATE OF CALIFORNIA OR ITS OFFICERS OR AGENTS SHALL NOT BE RESPONSIBLE FOR THE ACCURACY OR COMPLETENESS OF SCANNED COPIES OF THIS PLAN SHEET.

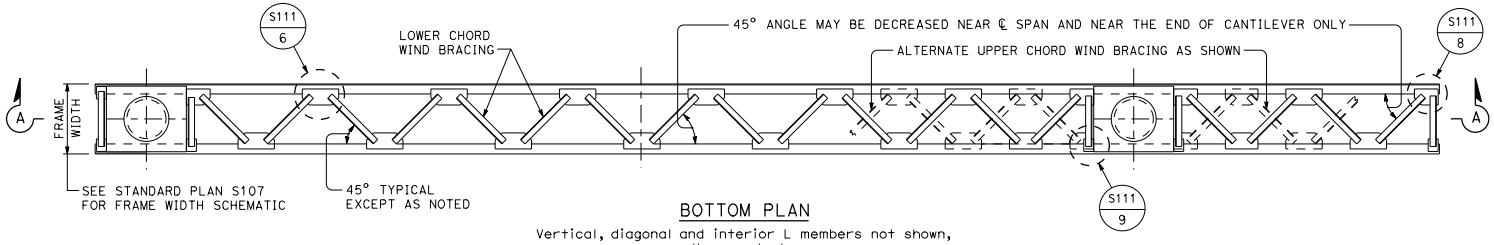

BOTTOM PLAN

Vertical, diagonal and interior L members not shown, walkway not shown

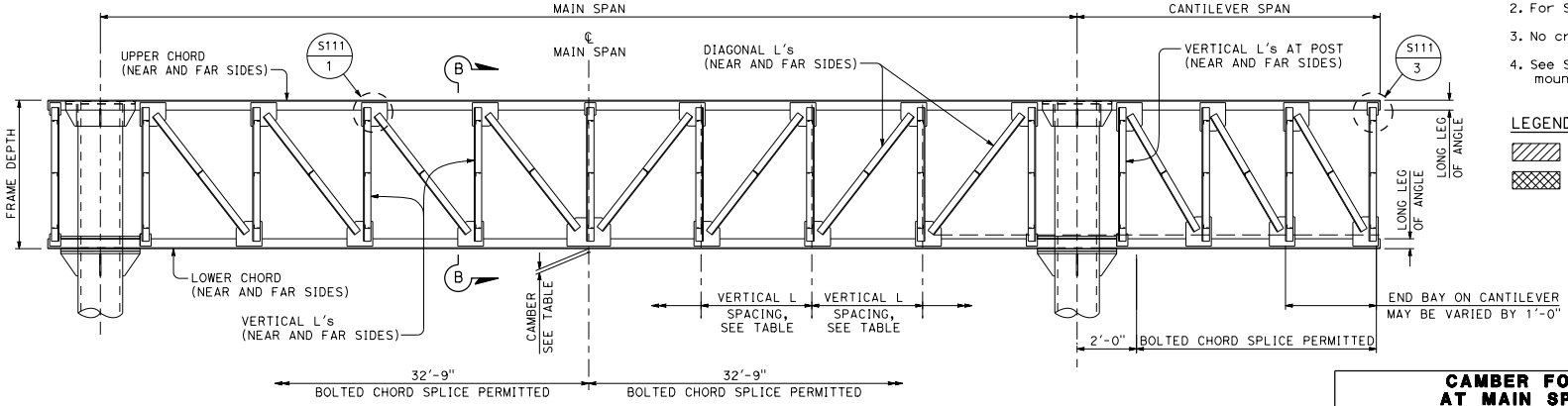

SECTION A-A

Walkway and wind bracing not shown

NOTES:

1. Frame widths shown are nominal. These widths may be varied by 1/4" to standardize fabrication methods.
2. For Section B-B, see Standard Plan S111.
3. No crossties on diagonals.
4. See Standard Plan S122 for exit plaque mounting details.

LEGEND:

SIGN PANEL

EXIT PLAQUE

CAMBER FOR FABRICATION AT MAIN SPAN CENTERLINE						
SPAN	FRAME DEPTH	CAMBER	FRAME DEPTH	CAMBER	FRAME DEPTH	CAMBER
30'-0" TO 60'-0"	60"	1½"	72"	1¼"	120"	1"
61'-0" TO 105'-0"	60"	3½"	72"	3"	120"	2"
106'-0" TO 150'-0"	60"	8"	72"	6¼"	120"	3½"

Camber to approximate parabola.
Camber of cantilever arm = ½" for arms greater than 10'-0".

TRUSS FRAME DEPTH AND VERTICAL ANGLE SPACING TABLE		
MAXIMUM SIGN PANEL DEPTH	FRAME DEPTH	MAXIMUM VERTICAL L SPACING
80"	60"	45"
180"	72"	54"
240"	120"	90"

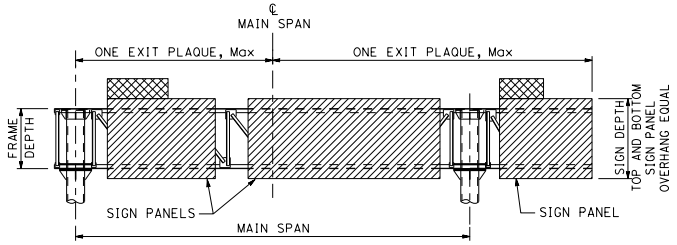

Right cantilever shown.
Cantilever may be left or right.

SIGN AND EXIT PLAQUE PLACEMENT

NOTE:
Equal sign panel overhangs apply to sign panels only. The exit plaque is mounted above the sign panels and the walkway is mounted below the sign panels, when used.

STATE OF CALIFORNIA
DEPARTMENT OF TRANSPORTATION

OVERHEAD SIGNS-VERSATILE TRUSS TWO POST TYPE TRUSS LAYOUT

NO SCALE

S106

2026 STANDARD PLAN S106

7-1-26

Return to Table of Contents

Dist	COUNTY	ROUTE	POST MILES TOTAL PROJECT	SHEET No.	TOTAL SHEETS

REGISTERED CIVIL ENGINEER

September 18, 2026

PLANS APPROVAL DATE

REGISTERED PROFESSIONAL ENGINEER Mahesh Shrestha No. C80133 Exp. 9-30-26 CIVIL STATE OF CALIFORNIA

THE STATE OF CALIFORNIA OR ITS OFFICERS OR AGENTS SHALL NOT BE RESPONSIBLE FOR THE ACCURACY OR COMPLETENESS OF SCANNED COPIES OF THIS PLAN SHEET.

POST SELECTION TABLE

SIGN PANEL DEPTH D	MAIN SPAN LENGTH L	POST TYPE BY POST CLEAR HEIGHT ≤ 16 ft	≤ 20 ft	≤ 24 ft	≤ 28 ft
D ≤ 80"	30'-0"	2A	2A	2A	2B
	30'-0" < L ≤ 45'-0"	2A	2B	2C	2D
	45'-0" < L ≤ 60'-0"	2C	2C	2E	2E
	60'-0" < L ≤ 75'-0"	2D	2E	2E	2E
	75'-0" < L ≤ 90'-0"	2E	2E	2E	2E
	90'-0" < L ≤ 105'-0"	2E	2E	2E	2F
	105'-0" < L ≤ 120'-0"	2E	2E	2F	2F
	120'-0" < L ≤ 135'-0"	2E	2F	2F	2G
	135'-0" < L ≤ 150'-0"	2F	2F	2G	2G
80" < D ≤ 100"	30'-0"	2A	2A	2B	2C
	30'-0" < L ≤ 45'-0"	2B	2C	2D	2E
	45'-0" < L ≤ 60'-0"	2C	2E	2E	2E
	60'-0" < L ≤ 75'-0"	2E	2E	2E	2E
	75'-0" < L ≤ 90'-0"	2E	2E	2F	2F
	90'-0" < L ≤ 105'-0"	2E	2F	2F	2G
	105'-0" < L ≤ 120'-0"	2E	2F	2G	2G
	120'-0" < L ≤ 135'-0"	2F	2F	2G	2G
	135'-0" < L ≤ 150'-0"	2F	2G	2G	2H
100" < D ≤ 120"	30'-0"	2A	2B	2C	2D
	30'-0" < L ≤ 45'-0"	2C	2D	2E	2E
	45'-0" < L ≤ 60'-0"	2E	2E	2E	2E
	60'-0" < L ≤ 75'-0"	2E	2E	2E	2F
	75'-0" < L ≤ 90'-0"	2E	2E	2F	2F
	90'-0" < L ≤ 105'-0"	2E	2F	2G	2G
	105'-0" < L ≤ 120'-0"	2F	2F	2G	2G
	120'-0" < L ≤ 135'-0"	2F	2G	2G	2H
	135'-0" < L ≤ 150'-0"	2G	2G	2H	2H
120" < D ≤ 150"	30'-0"	2B	2C	2D	2E
	30'-0" < L ≤ 45'-0"	2D	2E	2E	2E
	45'-0" < L ≤ 60'-0"	2E	2E	2E	2F
	60'-0" < L ≤ 75'-0"	2E	2F	2F	2G
	75'-0" < L ≤ 90'-0"	2F	2F	2G	2G
	90'-0" < L ≤ 105'-0"	2F	2G	2G	2H
	105'-0" < L ≤ 120'-0"	2F	2G	2H	2H
	120'-0" < L ≤ 135'-0"	2G	2H	2H	2H
	135'-0" < L ≤ 150'-0"	2G	2H	2H	2H
150" < D ≤ 180"	30'-0"	2C	2D	2E	2E
	30'-0" < L ≤ 45'-0"	2E	2E	2E	2E
	45'-0" < L ≤ 60'-0"	2E	2E	2F	2F
	60'-0" < L ≤ 75'-0"	2E	2F	2G	2G
	75'-0" < L ≤ 90'-0"	2F	2G	2G	2H
	90'-0" < L ≤ 105'-0"	2G	2G	2H	2H
	105'-0" < L ≤ 120'-0"	2G	2H	2H	2H
	120'-0" < L ≤ 135'-0"	2H	2H	2H	2H
	135'-0" < L ≤ 150'-0"	2H	2H	2H	2H
180" < D ≤ 210"	30'-0"	2D	2E	2E	2E
	30'-0" < L ≤ 45'-0"	2E	2E	2F	2F
	45'-0" < L ≤ 60'-0"	2F	2F	2G	2G
	60'-0" < L ≤ 75'-0"	2F	2G	2G	2H
	75'-0" < L ≤ 90'-0"	2G	2G	2H	2H
	90'-0" < L ≤ 105'-0"	2H	2H	2H	2H
	105'-0" < L ≤ 120'-0"	2H	2H	2H	2H
	120'-0" < L ≤ 135'-0"	2H	2H	2H	2H
	135'-0" < L ≤ 150'-0"	2H	2H	2H	2H
210" < D ≤ 240"	30'-0"	2E	2E	2E	2E
	30'-0" < L ≤ 45'-0"	2E	2F	2F	2G
	45'-0" < L ≤ 60'-0"	2F	2F	2G	2G
	60'-0" < L ≤ 75'-0"	2G	2G	2H	2H
	75'-0" < L ≤ 90'-0"	2G	2H	2H	2H
	90'-0" < L ≤ 105'-0"	2H	2H	2H	2H
	105'-0" < L ≤ 120'-0"	2H	2H	2H	2H
	120'-0" < L ≤ 135'-0"	2H	2H	2H	2H
	135'-0" < L ≤ 150'-0"	2H	2H	2H	-

TRUSS MEMBER TABLE

SIGN PANEL DEPTH ≤ 80"

MAIN SPAN LENGTH L	FRAME DEPTH	ANGLE MEMBER SIZE AND MINIMUM OVERLAP LENGTH TO GUSSET PLATE: CHORD	VERTICAL	L_V	DIAGONAL	L_d	WIND BRACE	L_W	INTERIOR	L_i
30'-0"	60"	L4 x 4 x 3/8	L3 x 3 x 3/8	3	L3 x 3 x 5/16	3	L2 1/2 x 2 1/2 x 1/4	3	L2 1/2 x 2 1/2 x 1/4	3
30'-0" < L ≤ 45'-0"	60"	L4 x 4 x 3/8	L3 x 3 x 3/8	3	L3 x 3 x 5/16	4	L2 1/2 x 2 1/2 x 1/4	3	L2 1/2 x 2 1/2 x 1/4	3
45'-0" < L ≤ 60'-0"	60"	L4 x 4 x 1/2	L3 x 2 x 3/8	3	L3 x 3 x 3/8	4	L2 1/2 x 2 1/2 x 1/4	3	L2 1/2 x 2 1/2 x 1/4	3
60'-0" < L ≤ 75'-0"	60"	L4 x 4 x 1/2	L3 x 2 x 3/8	3	L4 x 3 x 3/8	4	L2 1/2 x 2 1/2 x 1/4	4	L2 1/2 x 2 1/2 x 1/4	3
75'-0" < L ≤ 90'-0"	60"	L5 x 5 x 1/2	L4 x 4 x 1/2	3	L4 x 4 x 1/2	4	L3 x 3 x 5/16	4	L2 1/2 x 2 1/2 x 1/4	3
90'-0" < L ≤ 105'-0"	60"	L5 x 5 x 5/8	L5 x 3 x 1/2	3	L5 x 3 x 1/2	4	L3 x 3 x 3/8	4	L2 1/2 x 2 1/2 x 1/4	3
105'-0" < L ≤ 120'-0"	60"	L6 x 6 x 5/8	L5 x 3 1/2 x 1/2	3	L5 x 3 x 1/2	4	L3 x 3 x 3/8	4	L2 1/2 x 2 1/2 x 1/4	3
120'-0" < L ≤ 135'-0"	60"	L6 x 6 x 3/4	L5 x 3 1/2 x 3/4	3	L5 x 5 x 1/2	5	L3 x 3 x 3/8	4	L2 1/2 x 2 1/2 x 1/4	3
135'-0" < L ≤ 150'-0"	60"	L8 x 6 x 7/8	L5 x 5 x 5/8	4	L5 x 5 x 1/2	6	L3 1/2 x 3 1/2 x 3/8	5	L2 1/2 x 2 1/2 x 1/4	3

80" < SIGN PANEL DEPTH ≤ 180"

MAIN SPAN LENGTH L	FRAME DEPTH	ANGLE MEMBER SIZE AND MINIMUM OVERLAP LENGTH TO GUSSET PLATE: CHORD	VERTICAL	L_V	DIAGONAL	L_d	WIND BRACE	L_W	INTERIOR	L_i
30'-0"	72"	L4 x 4 x 3/4	L3 x 3 x 5/16	3	L3 x 3 x 5/16	3	L2 1/2 x 2 1/2 x 1/4	3	L2 1/2 x 2 1/2 x 1/4	3
30'-0" < L ≤ 45'-0"	72"	L4 x 4 x 3/4	L3 x 3 x 3/8	3	L4 x 4 x 3/8	4	L2 1/2 x 2 1/2 x 3/8	3	L2 1/2 x 2 1/2 x 1/4	3
45'-0" < L ≤ 60'-0"	72"	L5 x 5 x 5/8	L3 x 3 x 3/8	3	L4 x 4 x 3/8	4	L3 x 3 x 5/16	5	L2 1/2 x 2 1/2 x 1/4	3
60'-0" < L ≤ 75'-0"	72"	L5 x 5 x 3/4	L3 x 3 x 3/8	3	L4 x 4 x 3/8	5	L3 x 2 1/2 x 3/8	5	L2 1/2 x 2 1/2 x 1/4	3
75'-0" < L ≤ 90'-0"	72"	L6 x 6 x 5/8	L4 x 4 x 1/2	3	L4 x 4 x 1/2	5	L4 x 3 x 3/8	5	L2 1/2 x 2 1/2 x 1/4	3
90'-0" < L ≤ 105'-0"	72"	L6 x 6 x 3/4	L5 x 3 x 1/2	3	L5 x 5 x 1/2	5	L4 x 4 x 3/8	6	L3 x 3 x 5/16	3
105'-0" < L ≤ 120'-0"	72"	L6 x 6 x 1	L5 x 3 x 1/2	3	L5 x 5 x 1/2	5	L4 x 4 x 3/8	6	L3 x 3 x 5/16	3
120'-0" < L ≤ 135'-0"	72"	L8 x 6 x 1	L6 x 6 x 5/8	4	L5 x 5 x 5/8	5	L4 x 4 x 1/2	6	L3 x 3 x 5/16	3
135'-0" < L ≤ 150'-0"	72"	L8 x 8 x 1	L6 x 6 x 5/8	4	L6 x 6 x 5/8	5	L4 x 4 x 1/2	6	L3 x 3 x 5/16	3

180" < SIGN PANEL DEPTH ≤ 240"

MAIN SPAN LENGTH L	FRAME DEPTH	ANGLE MEMBER SIZE AND MINIMUM OVERLAP LENGTH TO GUSSET PLATE: CHORD	VERTICAL	L_V	DIAGONAL	L_d	WIND BRACE	L_W	INTERIOR	L_i
30'-0"	120"	L5 x 5 x 5/8	L3 x 3 x 3/8	3	L5 x 5 x 1/2	3	L2 1/2 x 2 1/2 x 1/4	3	L3 x 3 x 5/16	3
30'-0" < L ≤ 45'-0"	120"	L6 x 6 x 5/8	L3 x 3 x 3/8	3	L5 x 5 x 1/2	3	L2 1/2 x 2 1/2 x 3/8	3	L3 x 3 x 5/16	3
45'-0" < L ≤ 60'-0"	120"	L6 x 6 x 5/8	L3 x 3 x 3/8	3	L5 x 5 x 1/2	3	L3 x 2 1/2 x 3/8	4	L3 x 3 x 5/16	3
60'-0" < L ≤ 75'-0"	120"	L6 x 6 x 5/8	L3 x 3 x 3/8	3	L5 x 5 x 1/2	4	L3 x 3 x 1/2	4	L3 x 3 x 5/16	3
75'-0" < L ≤ 90'-0"	120"	L6 x 6 x 5/8	L4 x 4 x 1/2	3	L5 x 5 x 1/2	5	L4 x 4 x 3/8	6	L3 x 3 x 5/16	3
90'-0" < L ≤ 105'-0"	120"	L6 x 6 x 1	L5 x 3 x 1/2	3	L5 x 5 x 1/2	5	L4 x 4 x 1/2	6	L3 x 3 x 5/16	3
105'-0" < L ≤ 120'-0"	120"	L6 x 6 x 1	L5 x 3 x 1/2	3	L5 x 5 x 1/2	5	L4 x 4 x 1/2	6	L3 x 3 x 5/16	3
120'-0" < L ≤ 135'-0"	120"	L8 x 8 x 3/4	L5 x 3 x 1/2	3	L5 x 5 x 5/8	5	L5 x 5 x 1/2	6	L3 x 3 x 5/16	3
135'-0" < L ≤ 150'-0"	120"	L8 x 8 x 7/8	L5 x 3 1/2 x 3/4	3	L5 x 5 x 5/8	5	L5 x 5 x 1/2	6	L3 x 3 x 5/16	3

POST TYPE TABLE

POST TYPE	DIAMETER	Min NOMINAL THICKNESS	SPLIT
2A	16"	1.218"	N/A
2B	18"	1.156"	N/A
2C	20"	1.031"	N/A
2D	22"	1.125"	N/A
2E	24"	0.969"	N/A
2F	30"	0.625"	12"
2G	30"	1"	12"
2H	36"	1"	12"

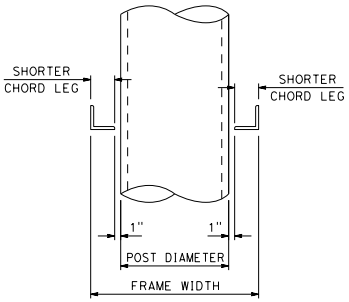

FRAME WIDTH SCHEMATIC

NOTES:

1. If a cantilever span is added, the same member sizes and weld lengths shall be used on the main and cantilever spans. Refer to Standard Plan S100 for rules on span lengths.
2. Post clear height is measured to underside of bottom truss chord.
3. Refer to Standard Plan S111 for connection details.
4. Minimum overlap lengths to Gusset Plates (Lv, Ld, Lw, and Li) are in inches.

STATE OF CALIFORNIA
DEPARTMENT OF TRANSPORTATION

OVERHEAD SIGNS-VERSATILE TRUSS TWO POST TYPE STEEL POST TYPE AND TRUSS MEMBER TABLE

NO SCALE

S107

2026 STANDARD PLAN S107

7-1-26

Return to Table of Contents

Dist	COUNTY	ROUTE	POST MILES TOTAL PROJECT	SHEET No.	TOTAL SHEETS

REGISTERED CIVIL ENGINEER

September 18, 2026

PLANS APPROVAL DATE

REGISTERED PROFESSIONAL ENGINEER Mahesh Shrestha No. C80133 Exp. 9-30-26 CIVIL STATE OF CALIFORNIA

THE STATE OF CALIFORNIA OR ITS OFFICERS OR AGENTS SHALL NOT BE RESPONSIBLE FOR THE ACCURACY OR COMPLETENESS OF SCANNED COPIES OF THIS PLAN SHEET.

BASE PLATE AND ANCHOR BOLT DIMENSIONS

	BASE PLATE				ANCHOR BOLTS				
POST TYPE	PLATE THICKNESS	PLATE RADIUS	SPLIT	OPENING RADIUS	NUMBER OF BOLTS	BOLT DIAMETER	BOLT LENGTH	BOLT HOLE DIAMETER	BOLT CIRCLE RADIUS
2A	3½"	1'-3"	N/A	2½"	14	1½"	5'-0"	1¾"	1'-0"
2B	3½"	1'-4½"	N/A	3"	14	1¾"	5'-0"	2"	1'-1"
2C	3"	1'-5½"	N/A	3"	16	1¾"	5'-0"	2"	1'-2"
2D	3½"	1'-6½"	N/A	3½"	16	1¾"	5'-0"	2"	1'-3"
2E	3"	1'-9"	N/A	3¾"	18	2"	5'-0"	2¼"	1'-5"
2F	3"	2'-0"	12"	4½"	22	2"	5'-0"	2¼"	1'-8"
2G	3½"	2'-0"	12"	4½"	22	2"	5'-0"	2¼"	1'-8"
2H	3½"	2'-4"	12"	5½"	24	2½"	5'-0"	2¾"	1'-11"

NOTE:
Thread locking nuts not required for anchor bolts.

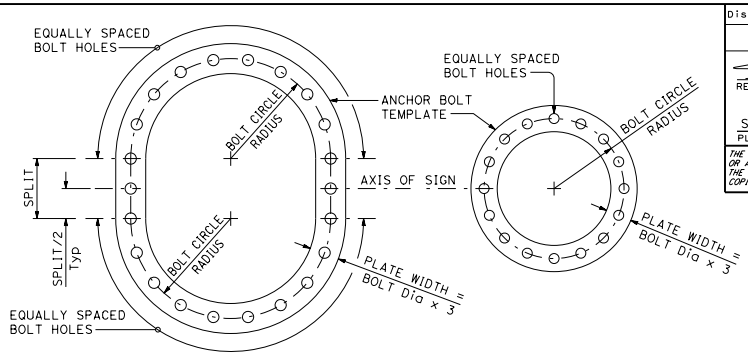

TEMPLATE WITH SPLIT
22 Bolt base plate depicted, others similar

TEMPLATE WITHOUT SPLIT
16 Bolt base plate depicted, others similar

ANCHOR BOLT TEMPLATE
Note: Permanent plate thickness = ¾", Removable plate thickness = ½"

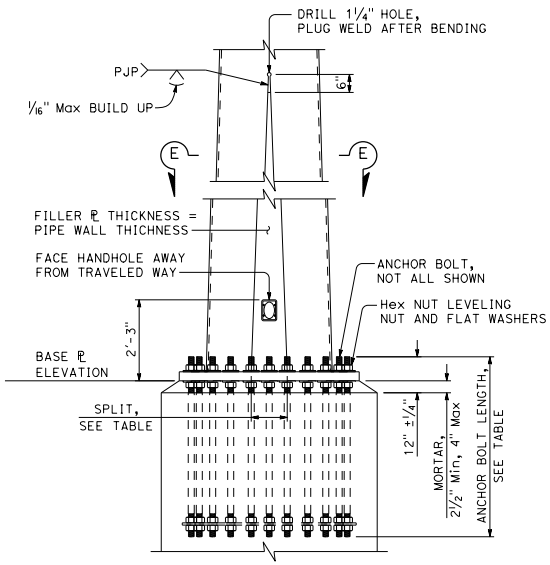

POST AND ANCHORAGE DETAIL

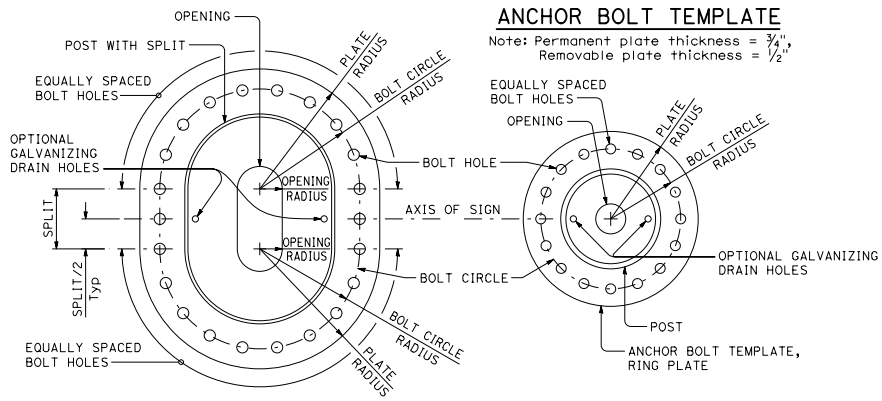

BASE PLATE WITH SPLIT
22 Bolt base plate depicted, others similar

BASE PLATE WITHOUT SPLIT
16 Bolt base plate depicted, others similar

BASE PLATE DETAILS

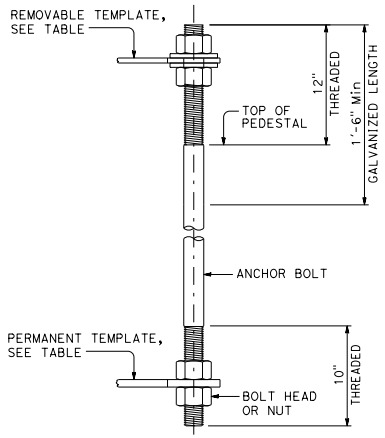

ANCHOR BOLT TEMPLATE ASSEMBLY

NOTE:
One bolt shown only. Other bolts same configuration around pipe sleeve. Template to match base plate anchor bolt pattern.

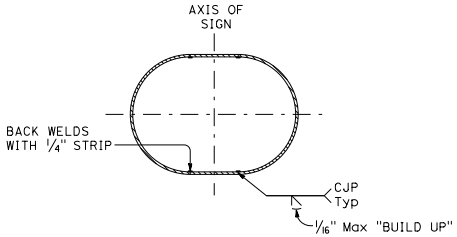

SECTION E-E

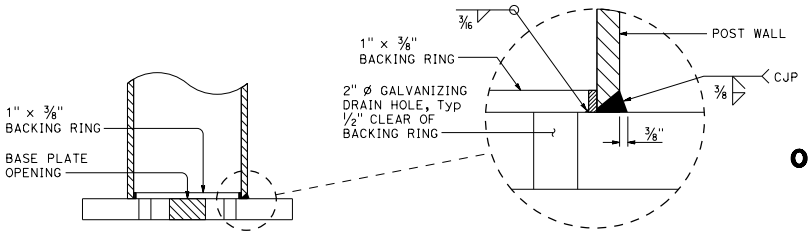

POST TO BASE PLATE CONNECTION DETAIL

STATE OF CALIFORNIA
DEPARTMENT OF TRANSPORTATION

OVERHEAD SIGNS-VERSATILE TRUSS TWO POST TYPE STEEL POST BASE PLATE AND ANCHORAGE DETAILS

NO SCALE

S108

2026 STANDARD PLAN S108

7-1-26

Return to Table of Contents

Dist	COUNTY	ROUTE	POST MILES TOTAL PROJECT	SHEET No.	TOTAL SHEETS

REGISTERED CIVIL ENGINEER

September 18, 2026
PLANS APPROVAL DATE

REGISTERED PROFESSIONAL ENGINEER
Mahesh Shrestha
No. C80133
Exp. 9-30-26
CIVIL
STATE OF CALIFORNIA

THE STATE OF CALIFORNIA OR ITS OFFICERS OR AGENTS SHALL NOT BE RESPONSIBLE FOR THE ACCURACY OR COMPLETENESS OF SCANNED COPIES OF THIS PLAN SHEET.

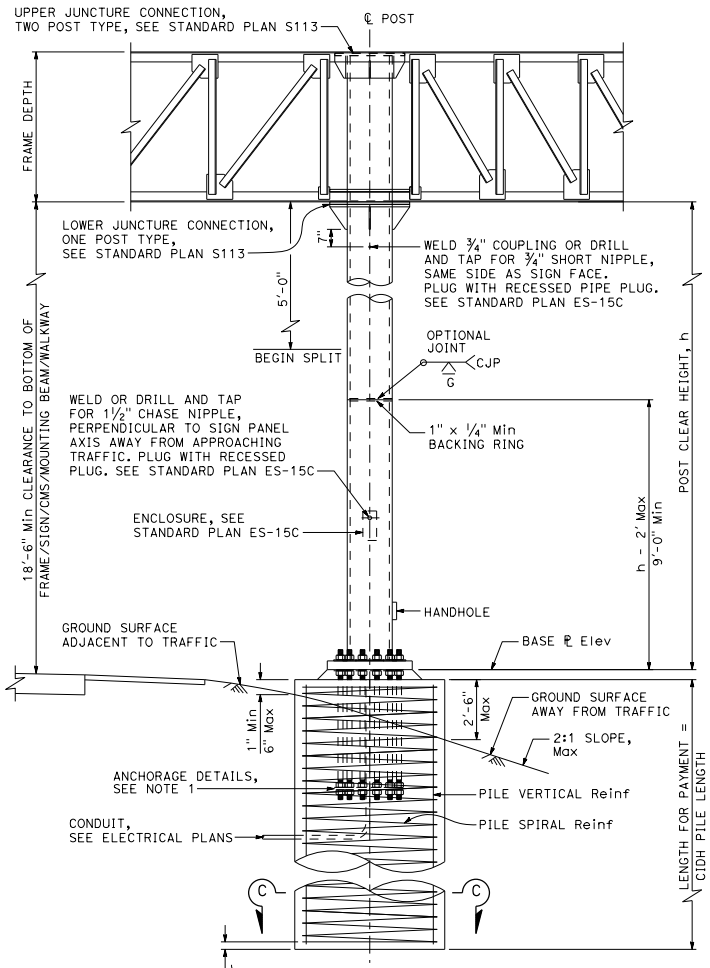

ELEVATION

CIDH in fill-slope depicted

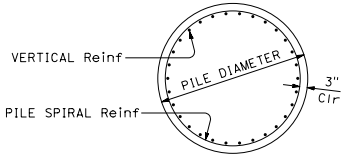

SECTION C-C

See Note 10

CIDH CONCRETE PILE TABLE

POST TYPE	DIAMETER	VERTICAL BAR SIZE	TOTAL NUMBER OF BARS	SPIRAL BAR SIZE	SPIRAL PITCH	MINIMUM CIDH PILE LENGTH
2A	5'-0"	#10	30	#6	5"	22'-0"
2B	5'-0"	#10	30	#6	5"	22'-0"
2C	5'-0"	#10	30	#6	5"	22'-0"
2D	5'-0"	#10	30	#6	5"	22'-0"
2E	5'-0"	#10	32	#6	5"	24'-0"
2F	6'-0"	#10	36	#6	5"	25'-0"
2G	6'-0"	#10	36	#6	4"	29'-0"
2H	6'-6"	#10	40	#6	4"	36'-0"

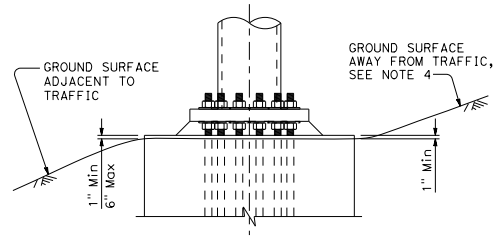

CIDH IN CUT-SLOPE

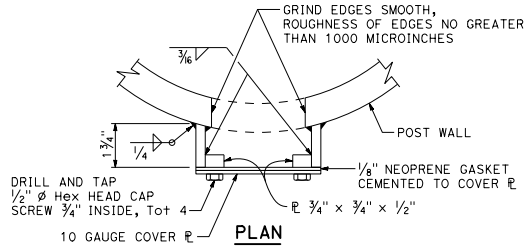

PLAN

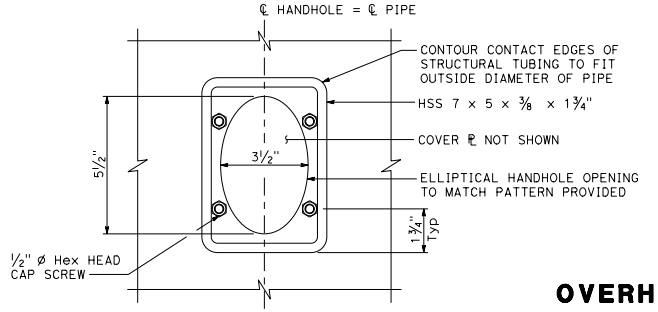

ELEVATION

TYPICAL DETAILS OF HANDHOLE AND COVER

NOTES:

1. For anchorage details, see Standard Plan S108.
2. For base ℄ elevation, see Project Plans.
3. Prior to erection of the post, backfill which is equivalent to the surrounding material shall be in place.
4. Slope stabilization required when indicated on the Project Plans.
5. For drain holes and central void in mortar, see Standard Plan ES-6B Detail N.
6. Refer to Standard Plan S107 for post type table.
7. Use pedestal with CIDH pile foundation when shown on the Project Plans. See Standard Plan S110.
8. On single post sign structures, the post shall be raked out of plumb, with the use of the leveling nuts to make the bottom of the sign frame level.
9. At final position of post all top and bottom nuts shall be tightened against base plate.
10. For CIDH pile foundation with inspection pipes, see Standard Plan S114.
11. Maximum electrical conduit diameter is 3".

STATE OF CALIFORNIA
DEPARTMENT OF TRANSPORTATION

OVERHEAD SIGNS-VERSATILE TRUSS TWO POST TYPE CIDH PILE FOUNDATION DETAILS

NO SCALE

S109

7-1-26

Return to Table of Contents

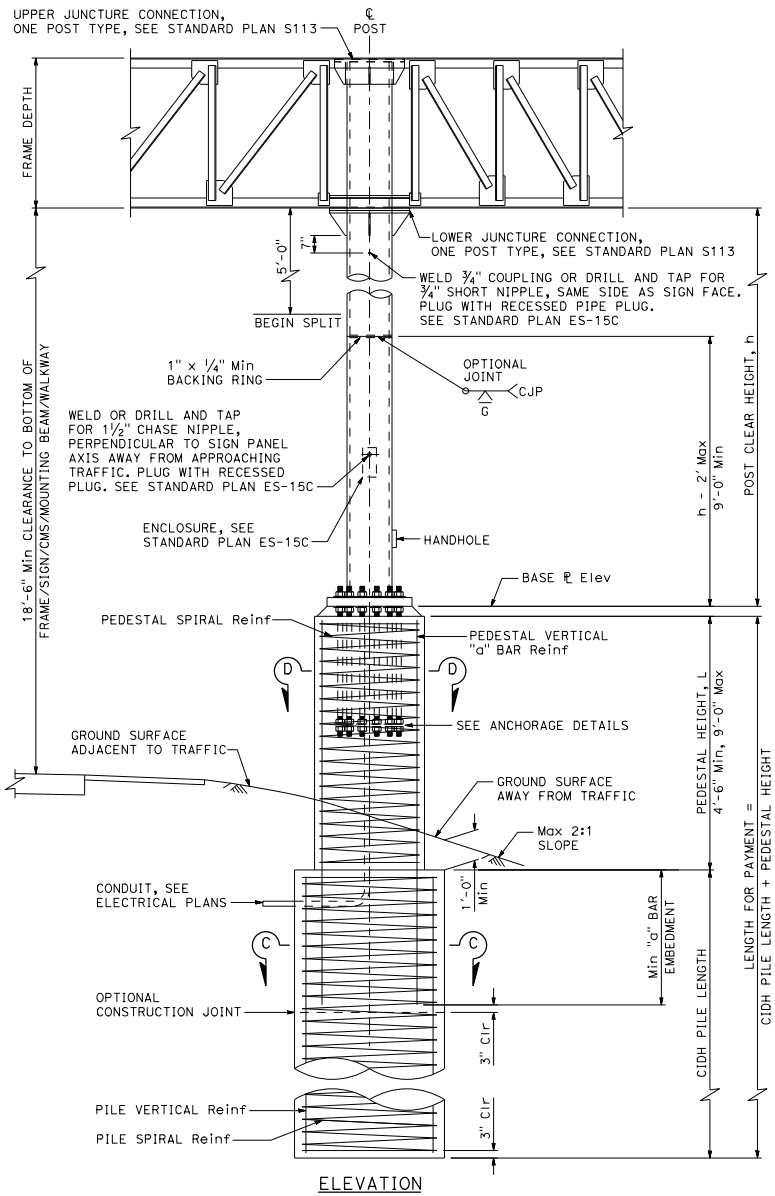

ELEVATION

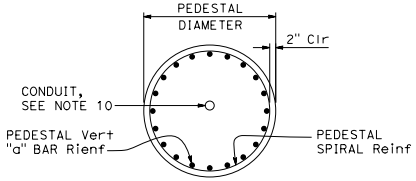

SECTION D-D
ROUND PEDESTAL

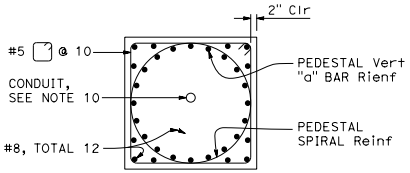

SECTION D-D
SQUARE PEDESTAL

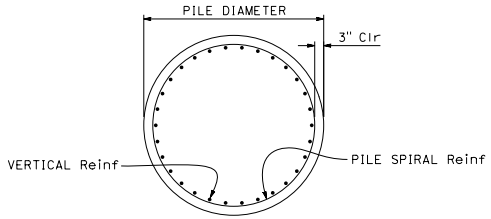

SECTION C-C
See Note 9

NOTES:

1. For anchorage details, see Standard Plan S108.
2. For base ℄ elevation, see Project Plans.
3. Prior to erection of the post, backfill which is equivalent to the surrounding material shall be in place.
4. For pedestal height and pedestal shape, see Project Plans.
5. Refer to Standard Plan S109 for CIDH pile foundation details when a pedestal is not indicated in the Project Plans.
6. Refer to Standard Plan S109 for additional details and notes not shown on this sheet.
7. For drain holes and central void in mortar, see Standard Plan ES-6B Detail N.
8. Refer to Standard Plan S107 for post type table.
9. For CIDH pile foundation with inspection pipes, see Standard Plan S114.
10. Maximum electrical conduit diameter is 3".

CONCRETE PEDESTAL AND CIDH CONCRETE PILE TABLE

POST TYPE	CONCRETE PEDESTAL							CIDH CONCRETE PILE					
	ROUND PEDESTAL DIAMETER	SQUARE PEDESTAL SIDES LENGTH	VERTICAL "a" BAR SIZE	NUMBER OF VERTICAL "a" BARS	SPIRAL BAR SIZE	SPIRAL PITCH	Min "a" BAR EMBEDMENT	DIAMETER	VERTICAL BAR SIZE	TOTAL NUMBER OF VERTICAL BARS	SPIRAL BAR SIZE	SPIRAL PITCH	MINIMUM CIDH PILE LENGTH
2A	3'-6"	3'-6"	#8	18	#5	5"	54"	5'-0"	#10	30	#6	5"	20'-0"
2B	3'-8"	3'-8"	#8	20	#5	5"	54"	5'-0"	#10	30	#6	5"	20'-0"
2C	3'-10"	3'-10"	#9	22	#5	5"	72"	5'-0"	#10	30	#6	5"	20'-0"
2D	4'-0"	4'-0"	#9	24	#5	5"	72"	5'-0"	#10	30	#6	5"	20'-0"
2E	4'-4"	4'-4"	#9	22	#5	5"	72"	5'-0"	#10	32	#6	5"	22'-0"

Dist	COUNTY	ROUTE	POST MILES TOTAL PROJECT	SHEET No.	TOTAL SHEETS

REGISTERED CIVIL ENGINEER

September 18, 2026
PLANS APPROVAL DATE

Mahesh Shrestha
No. C80133
Exp. 9-30-26
CIVIL
STATE OF CALIFORNIA
REGISTERED PROFESSIONAL ENGINEER

THE STATE OF CALIFORNIA OR ITS OFFICERS OR AGENTS SHALL NOT BE RESPONSIBLE FOR THE ACCURACY OR COMPLETENESS OF SCANNED COPIES OF THIS PLAN SHEET.

STATE OF CALIFORNIA
DEPARTMENT OF TRANSPORTATION

OVERHEAD SIGNS-VERSATILE TRUSS TWO POST TYPE CONCRETE PEDESTAL WITH CIDH PILE FOUNDATION DETAILS

NO SCALE

S110

2026 STANDARD PLAN S110

7-1-26

Return to Table of Contents

Dist	COUNTY	ROUTE	POST MILES TOTAL PROJECT	SHEET No.	TOTAL SHEETS

REGISTERED CIVIL ENGINEER

September 18, 2026

PLANS APPROVAL DATE

REGISTERED PROFESSIONAL ENGINEER Mahesh Shrestha No. C80133 Exp. 9-30-26 CIVIL STATE OF CALIFORNIA

THE STATE OF CALIFORNIA OR ITS OFFICERS OR AGENTS SHALL NOT BE RESPONSIBLE FOR THE ACCURACY OR COMPLETENESS OF SCANNED COPIES OF THIS PLAN SHEET.

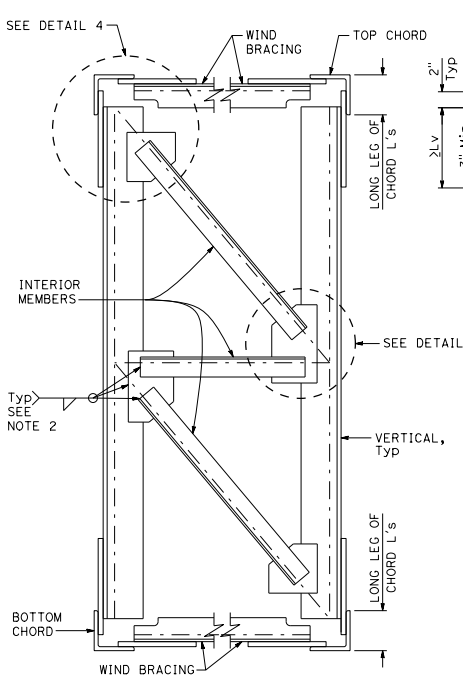

TYPICAL SECTION B-B

Diagonal members not shown, see Standard Plans S101 and S106

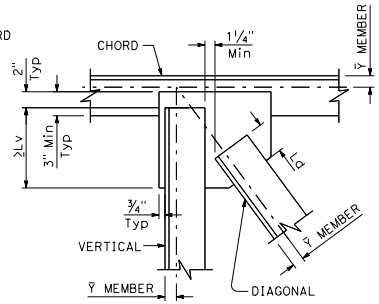

DETAIL 1

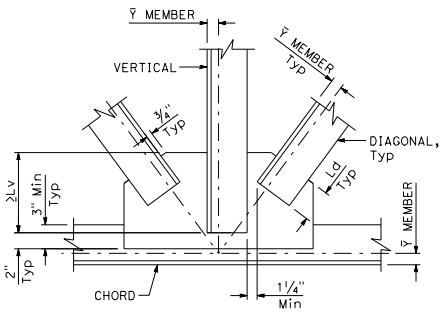

DETAIL 2

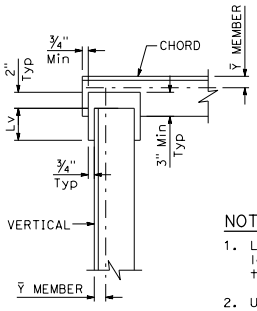

DETAIL 3

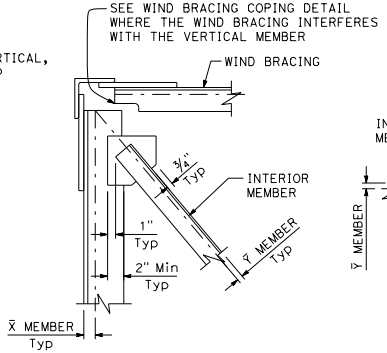

DETAIL 4

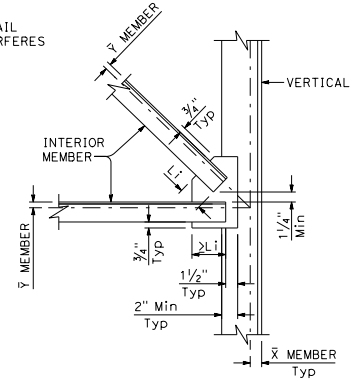

DETAIL 5

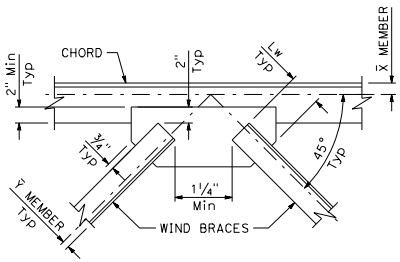

DETAIL 6

NOTES:

1. Lv, Ld, Lw and Li indicate minimum overlap lengths for member to gusset plates. Refer to Standard Plans S102 and S107 for values.
2. Unless otherwise noted, connections between members and gusset plates are fillet welds around all edges. See "Weld Table" for fillet weld size.
3. Gusset plate thickness = ⅝".
4. Gusset plate dimensions vary based on connecting member sizes and the orientation of their centroids.
5. All connection details are typical and may be mirrored depending on the connection location.

ABBREVIATIONS:

X̄ = Distance to centroid of L along the short leg.
Ȳ = Distance to centroid of L along the long leg.

WELD TABLE

THICKNESS OF ANGLE	WELD SIZE
¼"	3/16"
5/16"	3/16"
3/8"	¼"
½"	3/8"
5/8"	½"
≥ ¾"	9/16"

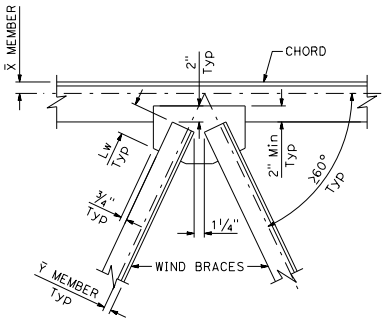

DETAIL 7

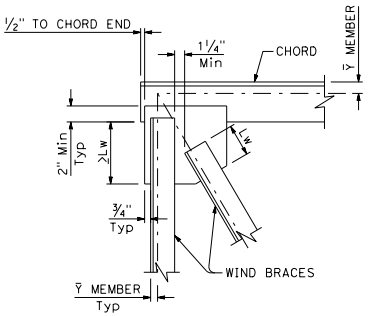

DETAIL 8

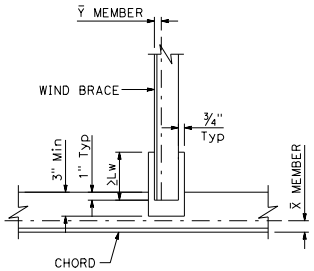

DETAIL 9

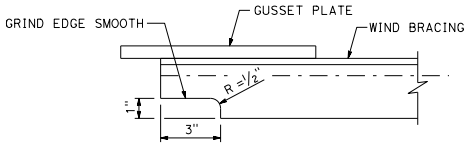

WIND BRACING COPING DETAIL

STATE OF CALIFORNIA
DEPARTMENT OF TRANSPORTATION

OVERHEAD SIGNS-VERSATILE TRUSS TRUSS CONNECTION DETAILS

NO SCALE

S111

7-1-26

Return to Table of Contents

Dist	COUNTY	ROUTE	POST MILES TOTAL PROJECT	SHEET No.	TOTAL SHEETS

REGISTERED CIVIL ENGINEER

September 18, 2026

PLANS APPROVAL DATE

REGISTERED PROFESSIONAL ENGINEER Mahesh Shrestha No. C80133 Exp. 9-30-26 CIVIL STATE OF CALIFORNIA

THE STATE OF CALIFORNIA OR ITS OFFICERS OR AGENTS SHALL NOT BE RESPONSIBLE FOR THE ACCURACY OR COMPLETENESS OF SCANNED COPIES OF THIS PLAN SHEET.

TABLE 1
BOLTED CHORD SPLICE

CHORD THICKNESS	NOMINAL BOLT DIAMETER	"a" Pref	"a" Min	"b" Min
3/8"	3/4"	2 1/4"	2"	1"
1/2"	7/8"	2 5/8"	2 3/8"	1 1/8"
5/8"	1"	3"	2 11/16"	1 1/4"
3/4"	1 1/4"	3 3/4"	3 3/8"	1 5/8"
7/8"	1 1/2"	4 1/2"	4"	1 7/8"
1"	1 1/2"	4 1/2"	4"	1 7/8"

Use Pref values of "a", unless lack of room requires use of Min values.

TABLE 2
BOLTED WIND BRACE AT CHORD SPLICE

CHORD THICKNESS	BOLTED WIND BRACE	
	BOLTED LEG Min WIDTH	Min THICKNESS
3/8"	2 1/2"	5/16"
1/2"	3"	5/16"
5/8"	3"	3/8"
3/4"	3"	1/2"
7/8"	3 1/2"	1/2"
1"	3 1/2"	1/2"

TABLE 3
BOLTED MEMBER TO GUSSET PLATE

MEMBER THICKNESS	NOMINAL BOLT DIAMETER	"c" Min	"d" Min
5/16"	5/8"	1 7/8"	7/8"
3/8"	3/4"	2 1/4"	1"
1/2"	7/8"	2 5/8"	1 1/8"
5/8"	1"	3"	1 1/4"
3/4"	1 1/4"	3 3/4"	1 5/8"

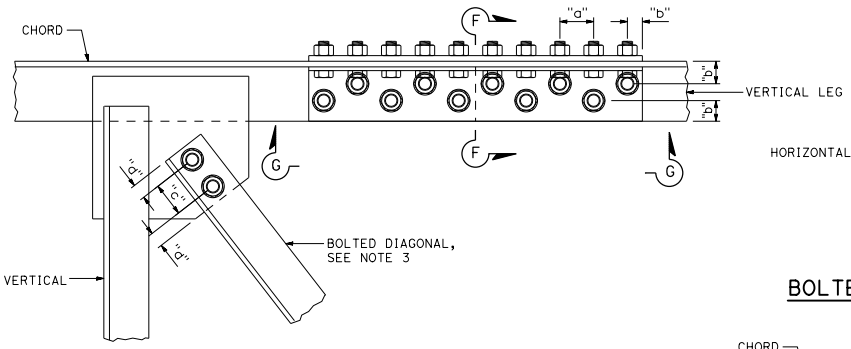

BOLTED CHORD SPLICE

Wind bracing not shown

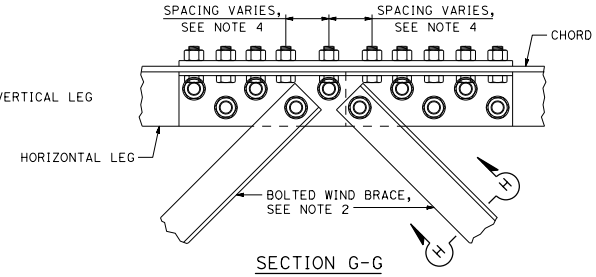

SECTION G-G

BOLTED WIND BRACE AT BOLTED CHORD SPLICE

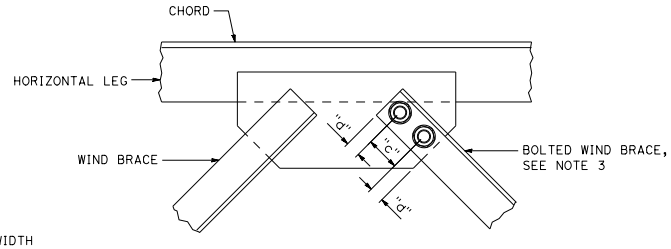

BOLTED WIND BRACE AT GUSSET PLATES

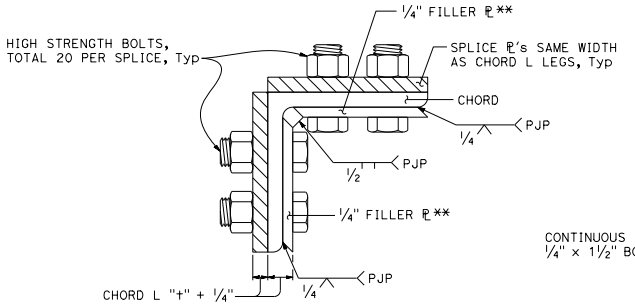

SECTION F-F

** 5/16" Filler ℞ at 3/4" thick chord angle
** 3/8" Filler ℞ at 7/8" and 1" thick chord angle

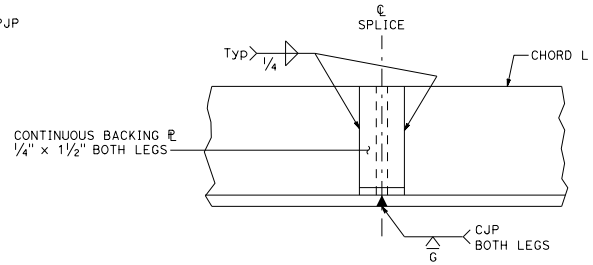

WELDED CHORD SPLICE

NOTES:

1. All bolted connections for the chord splice and gusset plate connections are fully tensioned.
2. See "Truss Member Table" on Standard Plans S102 and S107 for the size of bolted wind brace angle. The bolted wind brace leg width and thickness shall be increased if necessary in order to meet the minimum dimensions on Table 2.
3. See Table 3 for nominal bolt diameter and spacing for bolted members to gusset plate.
4. The bolt spacing for the bolted chord splice may be increased up to 1" in order to accomodate the bolted wind brace. The unbolted leg of the wind brace may be trimmed in order to avoid conflicts with the chord splice bolts, see Wind Bracing Coping Detail on Standard Plan S111.
5. See Standard Plan S111 for details not shown.

SPLICE NOTES:

Location of Splices:
The splice shall be located so as not to interfere with the gusset plate connections for the vertical and diagonal L's. For two post type, see also Standard Plan S106.

Filler ℞:
The filler plates welded to the angle legs on the inside shall be welded before drilling the bolt holes. The filler plates shall be the same length as the splice plates. The filler plates are not necessary on the single post signs if the splice is located over 1/3 of the cantilever length from the post. Alternative splice details may be used if approved by the Engineer.

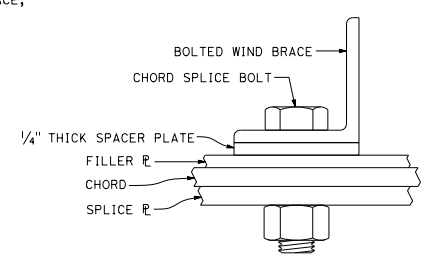

SECTION H-H

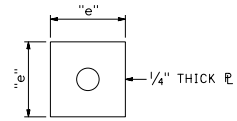

SPACER PLATE

"e" = WIND BRACE LEG WIDTH

STATE OF CALIFORNIA
DEPARTMENT OF TRANSPORTATION

OVERHEAD SIGNS-VERSATILE TRUSS CHORD SPLICE DETAILS

NO SCALE

S112

7-1-26

2026 STANDARD PLAN S112

Return to Table of Contents

Dist	COUNTY	ROUTE	POST MILES TOTAL PROJECT	SHEET No.	TOTAL SHEETS

REGISTERED CIVIL ENGINEER

September 18, 2026
PLANS APPROVAL DATE

Mahesh Shrestha
No. C80133
Exp. 9-30-26
CIVIL
STATE OF CALIFORNIA

THE STATE OF CALIFORNIA OR ITS OFFICERS OR AGENTS SHALL NOT BE RESPONSIBLE FOR THE ACCURACY OR COMPLETENESS OF SCANNED COPIES OF THIS PLAN SHEET.

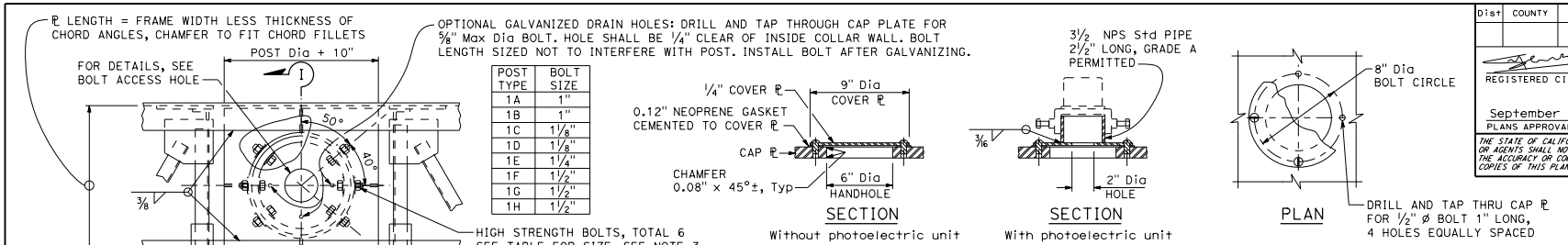

POST TYPE	BOLT SIZE
1A	1"
1B	1"
1C	1 1/8"
1D	1 1/8"
1E	1 1/4"
1F	1 1/2"
1G	1 1/2"
1H	1 1/2"

BOLT-ACCESS HOLE ONE POST TYPE

NOTES: (SINGLE POST TYPE)

1. In all cases, truss shall be supported at lower juncture connection. Bearing surface shall be finished true.
2. Post to truss connections shall be fitted in shop.
3. High strength bolts shall be snug tighten. Torque requirments are waived.

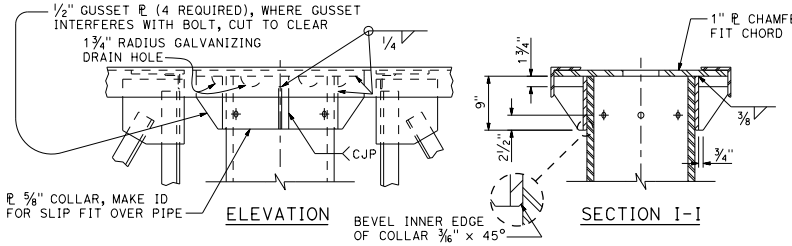

UPPER JUNCTURE CONNECTION ONE POST TYPE

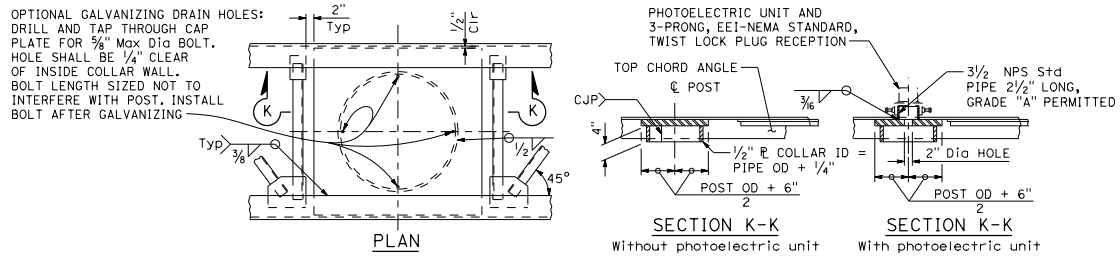

UPPER JUNCTURE CONNECTION TWO POST TYPE

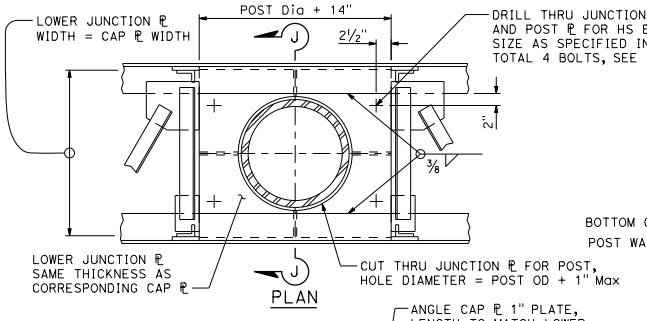

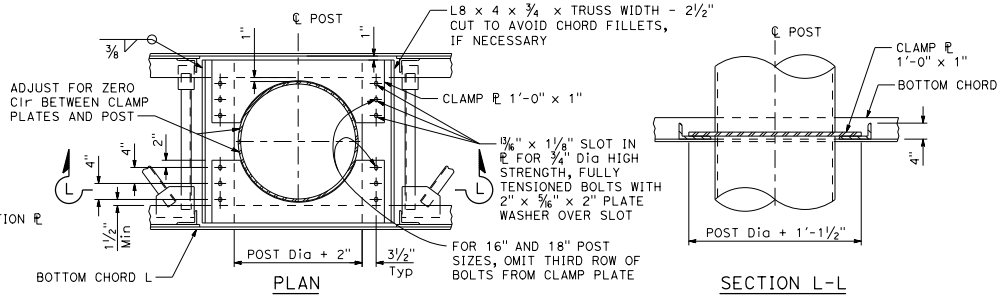

LOWER JUNCTURE CONNECTION TWO POST TYPE

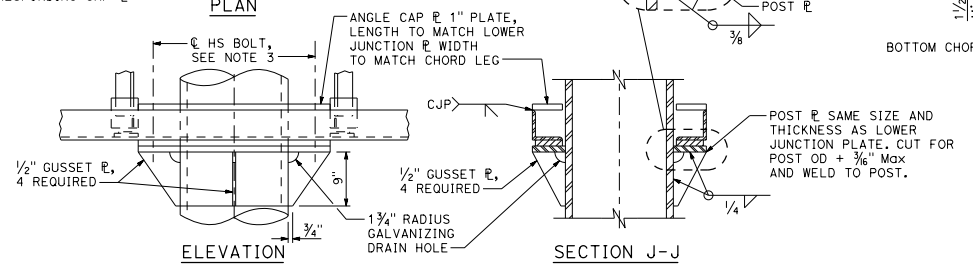

LOWER JUNCTURE CONNECTION ONE POST TYPE

STATE OF CALIFORNIA
DEPARTMENT OF TRANSPORTATION

OVERHEAD SIGNS-VERSATILE TRUSS TRUSS TO STEEL POST CONNECTION DETAILS

NO SCALE

S113

2026 STANDARD PLAN S113

7-1-26

Return to Table of Contents

Dist	COUNTY	ROUTE	POST MILES TOTAL PROJECT	SHEET No.	TOTAL SHEETS

REGISTERED CIVIL ENGINEER

September 18, 2026

PLANS APPROVAL DATE

REGISTERED PROFESSIONAL ENGINEER Mahesh Shrestha No. C80133 Exp. 9-30-26 CIVIL STATE OF CALIFORNIA

THE STATE OF CALIFORNIA OR ITS OFFICERS OR AGENTS SHALL NOT BE RESPONSIBLE FOR THE ACCURACY OR COMPLETENESS OF SCANNED COPIES OF THIS PLAN SHEET.

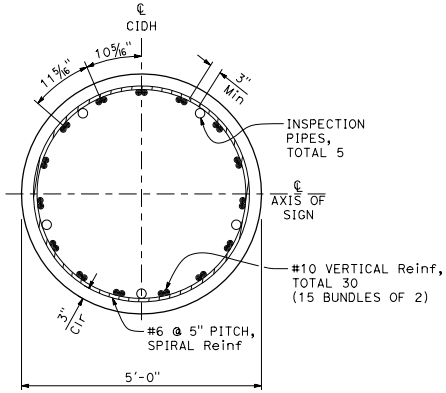

POST TYPES 1A, 1B, 1C, 1D, 2A, 2B, 2C AND 2D

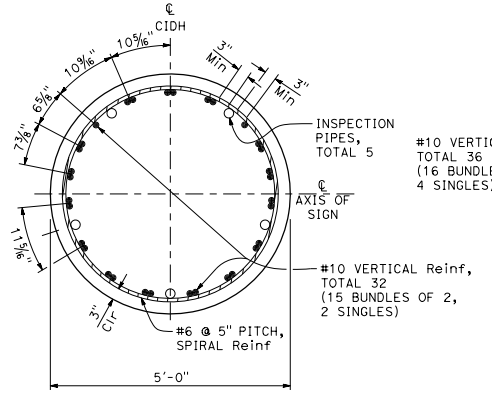

POST TYPES 1E AND 2E

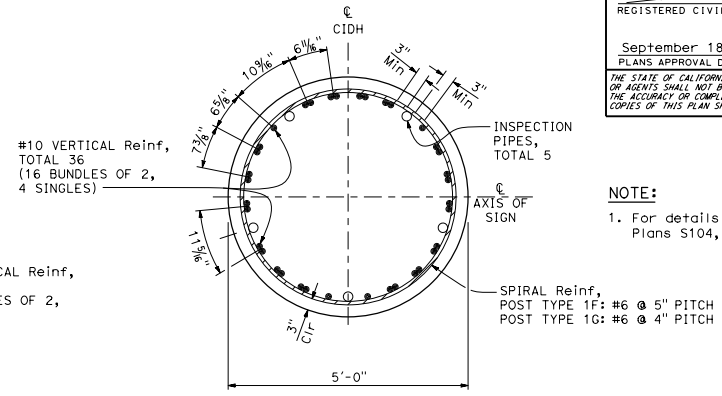

POST TYPES 1F AND 1G

NOTE:

1. For details not shown, see Standard Plans S104, S105, S109 and S110.

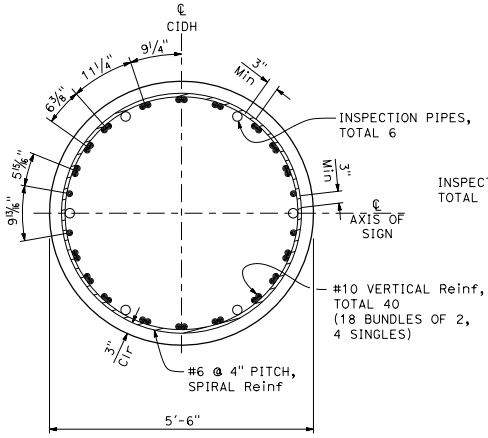

POST TYPE 1H

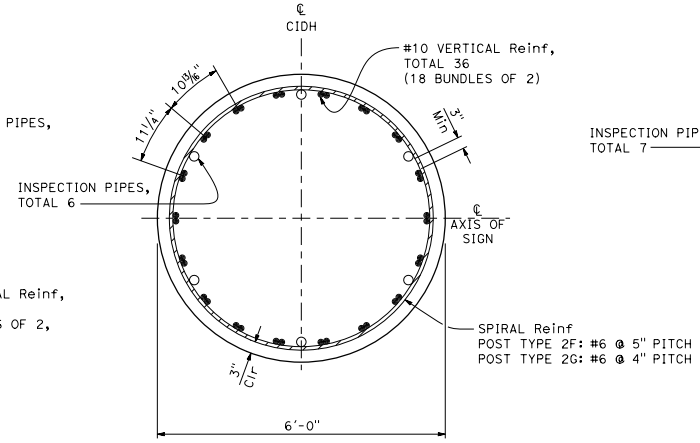

POST TYPES 2F AND 2G

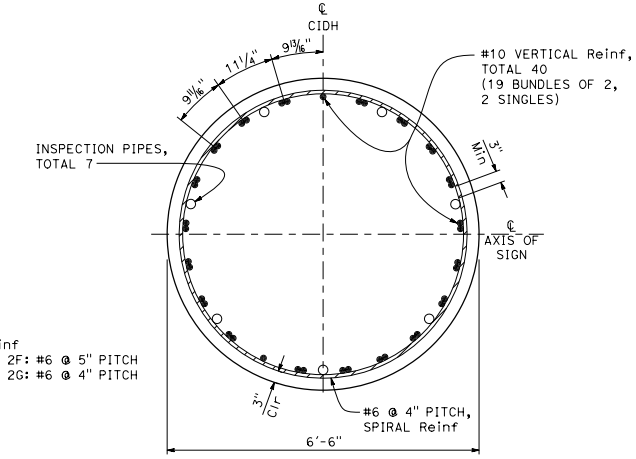

POST TYPE 2H

STATE OF CALIFORNIA
DEPARTMENT OF TRANSPORTATION

OVERHEAD SIGNS-VERSATILE TRUSS CIDH PILE FOUNDATION WITH INSPECTION PIPES

NO SCALE

S114

2026 STANDARD PLAN S114

7-1-26

Return to Table of Contents

Dist	COUNTY	ROUTE	POST MILES TOTAL PROJECT	SHEET No.	TOTAL SHEETS

REGISTERED CIVIL ENGINEER

September 18, 2026
PLANS APPROVAL DATE

REGISTERED PROFESSIONAL ENGINEER
Mahesh Shrestha
No. C80133
Exp. 9-30-26
CIVIL
STATE OF CALIFORNIA

THE STATE OF CALIFORNIA OR ITS OFFICERS OR AGENTS SHALL NOT BE RESPONSIBLE FOR THE ACCURACY OR COMPLETENESS OF SCANNED COPIES OF THIS PLAN SHEET.

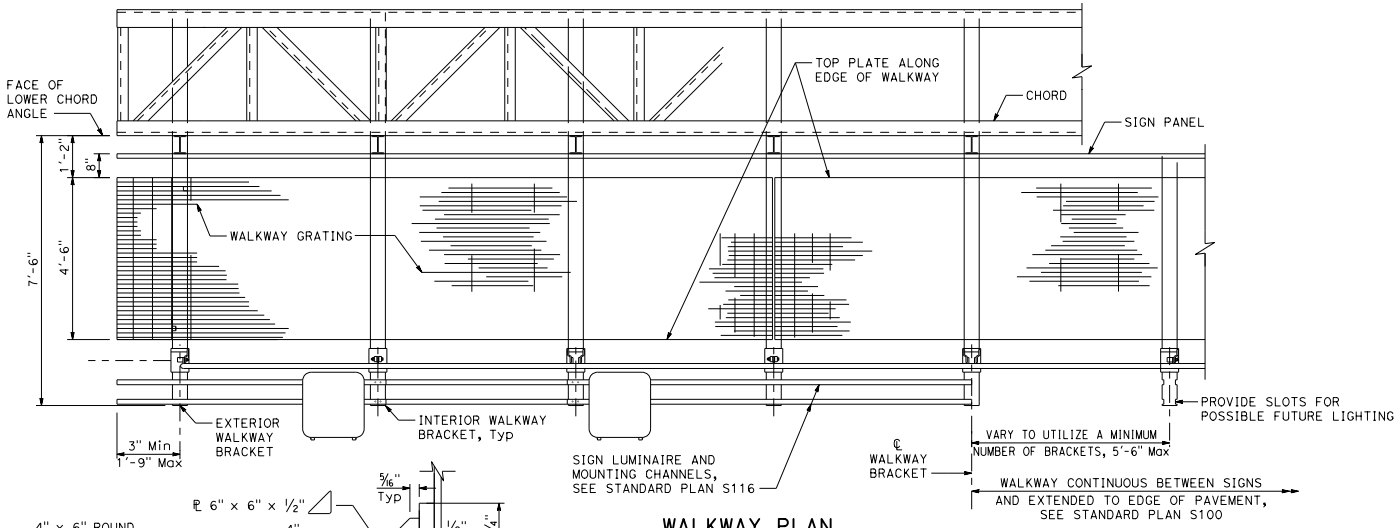

WALKWAY PLAN

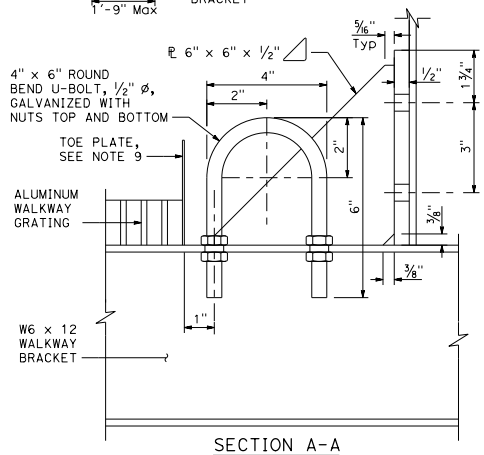

SECTION A-A

(At every walkway bracket)
NOTE: 1/2" ø Steel Ring not shown

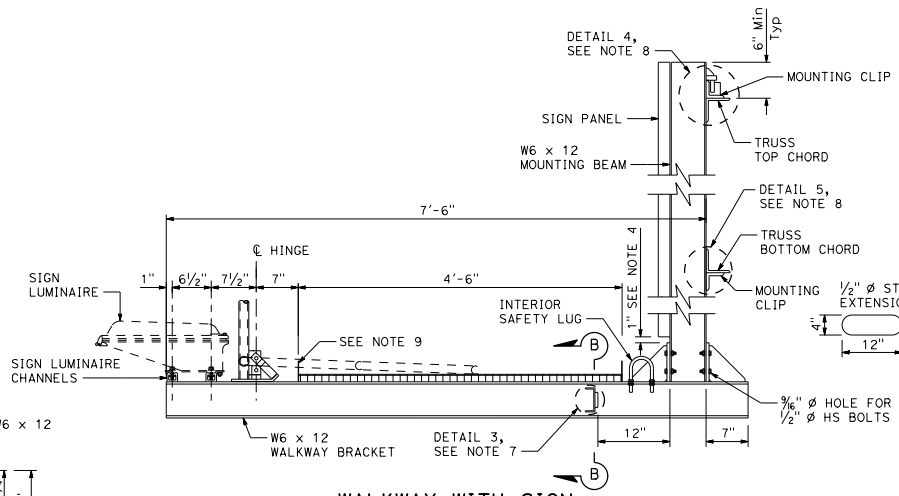

WALKWAY WITH SIGN

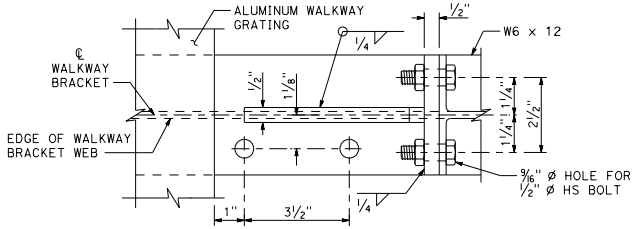

INTERIOR SAFETY LUG DETAIL

U-Bolt not shown

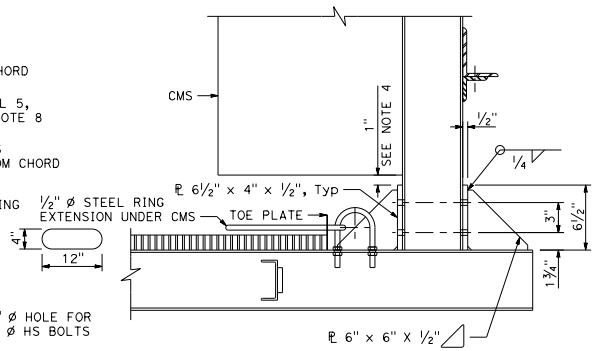

WALKWAY WITH CMS

NOTES:

1. Mounting beam spacing to be determined by sign requirements. Refer to Standard Plans S119 to S124 for details.
2. For signs without walkways, mounting beam to be cut short at bottom. Refer to Standard Plans S119 to S122 and S124 for details.
3. Walkway brackets shall be bolted to mounting beams when walkways are provided. Maximum spacing = 5'-6".
4. For sign panels and CMS that don't project below the truss, maintain 1" clearance between the mounting clip and walkway bracket gusset plate assembly.
5. For sign luminaire mounting channel details, see Standard Plan S116.
6. For aluminum walkway grating details, see Standard Plan S116.
7. For Section B-B and Detail 3, see Standard Plan S116.
8. For Detail 4 and Detail 5, see Standard Plan S117.
9. For Toe Plate Cut-Out Detail and Cover Plate Detail, see Standard Plan S117.

STATE OF CALIFORNIA
DEPARTMENT OF TRANSPORTATION

OVERHEAD SIGNS-VERSATILE TRUSS WALKWAY DETAILS No. 1

NO SCALE

S115

2026 STANDARD PLAN S115

7-1-26

Return to Table of Contents

Dist	COUNTY	ROUTE	POST MILES TOTAL PROJECT	SHEET No.	TOTAL SHEETS

REGISTERED CIVIL ENGINEER

September 18, 2026

PLANS APPROVAL DATE

REGISTERED PROFESSIONAL ENGINEER Mahesh Shrestha No. C80133 EXP. 9-30-26 CIVIL STATE OF CALIFORNIA

THE STATE OF CALIFORNIA OR ITS OFFICERS OR AGENTS SHALL NOT BE RESPONSIBLE FOR THE ACCURACY OR COMPLETENESS OF SCANNED COPIES OF THIS PLAN SHEET.

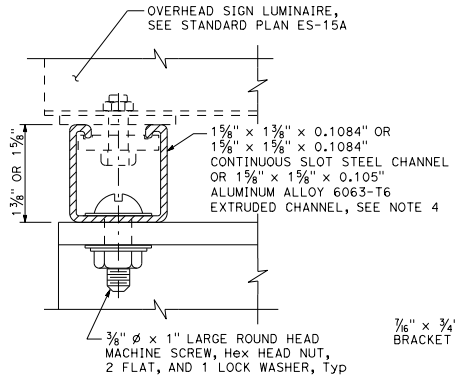

DETAIL 1

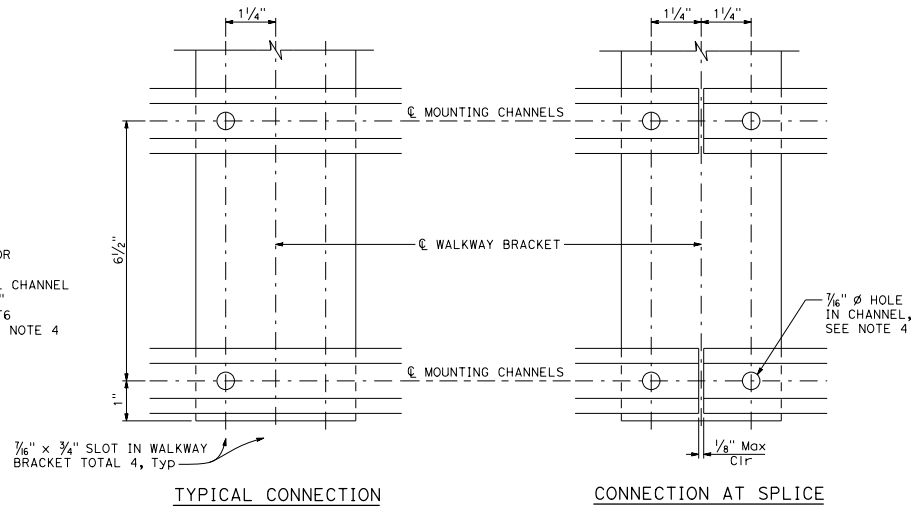

TYPICAL CONNECTION

DETAIL 2

CONNECTION AT SPLICE

SIGN LUMINAIRE MOUNTING CHANNEL

NOTES:

1. Maximum unsupported span shall be 5'-6". Bearing bar minimum height shall be 1½", maximum height shall be 2½", and bearing bar thickness shall be 3/16". Grating shall be capable of carrying a 500 lb concentrated load and a 40 psf uniform load, applied non-concurrently. Maximum allowable deflection under 40 psf uniform load shall be 1.75". The maximumallowable grating self-weight shall be 9.0 psf.

2. Aluminum walkway grating and light fixture mounting channels to be continuous (no splices) over as many walkway brackets as practical and consistent with fabrication, ease of handling, and assembly.

3. Hold down saddle anchors shall be installed at every walkway bracket (not just spliced locations). At non-splice locations, saddle anchors may be installed on one side of girder web only. All hold-down hardware shall be galvanized, the hold-down saddle clip shall be aluminum, and a nylon washer shall be installed on the underside of the nut.

4. Contractor may substitute 1⅝" x 1⅝" x 0.1084" continuous slot steel channel with pre-punched slots not larger than 11/32" x 3" slots shall be at bottom of channel and shall be parallel to channel. Slots shall be spaced not closer than 4" center to center.

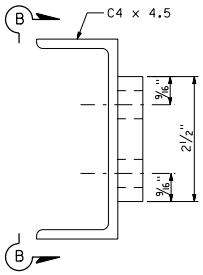

DETAIL 3

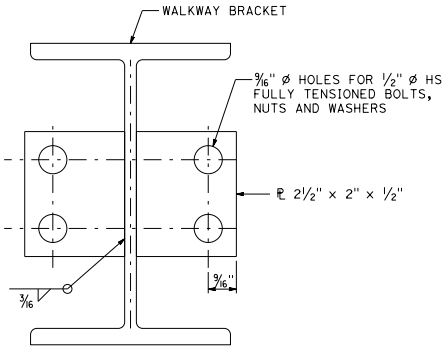

SECTION B-B

Walkway and C-shape not shown

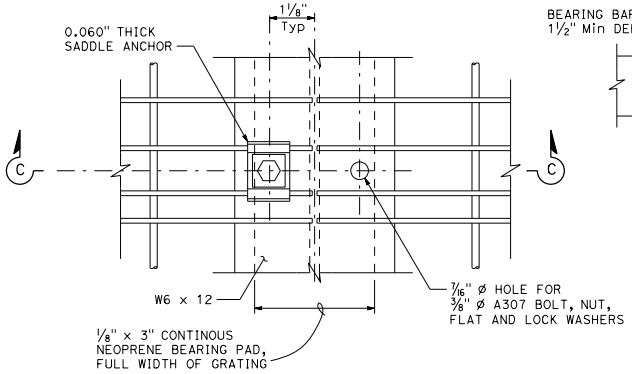

PLAN

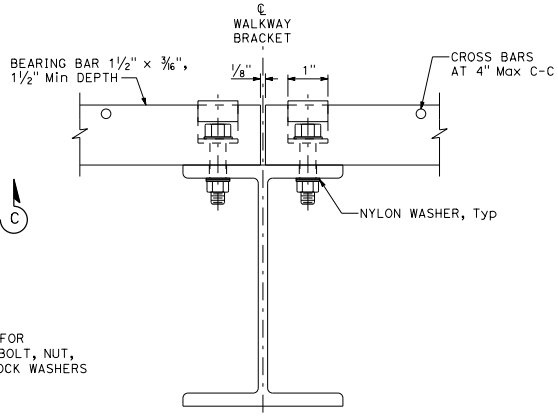

SECTION C-C

ALUMINUM WALKWAY GRATING DETAILS

Shown at splice

STATE OF CALIFORNIA
DEPARTMENT OF TRANSPORTATION

OVERHEAD SIGNS-VERSATILE TRUSS WALKWAY DETAILS No. 2

NO SCALE

S116

2026 STANDARD PLAN S116

7-1-26

Return to Table of Contents

Dist	COUNTY	ROUTE	POST MILES TOTAL PROJECT	SHEET No.	TOTAL SHEETS

REGISTERED CIVIL ENGINEER

September 18, 2026

PLANS APPROVAL DATE

REGISTERED PROFESSIONAL ENGINEER Mahesh Shrestha No. C80133 Exp. 9-30-26 CIVIL STATE OF CALIFORNIA

THE STATE OF CALIFORNIA OR ITS OFFICERS OR AGENTS SHALL NOT BE RESPONSIBLE FOR THE ACCURACY OR COMPLETENESS OF SCANNED COPIES OF THIS PLAN SHEET.

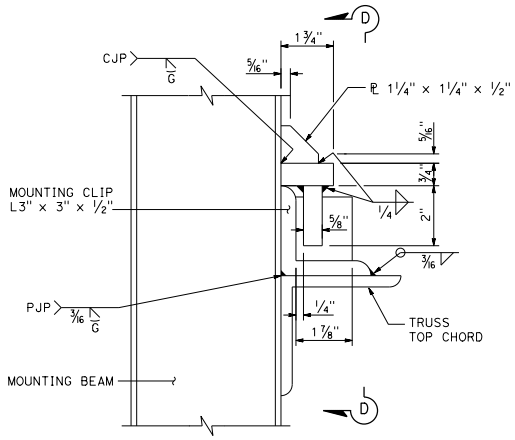

DETAIL 4

Bolt holes not shown

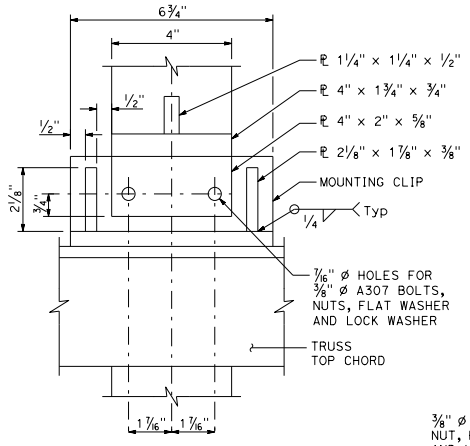

SECTION D-D

NOTE:

L3" x 3" x 1/2" mounting beam supports may be installed over full length of truss if greater sign placement flexibility is desired.

NOTES:

1. Cover plates placed on the walkway grating side of toe plate.
2. Cover plate is 1/16" thick aluminum sheet 5052-H-32.

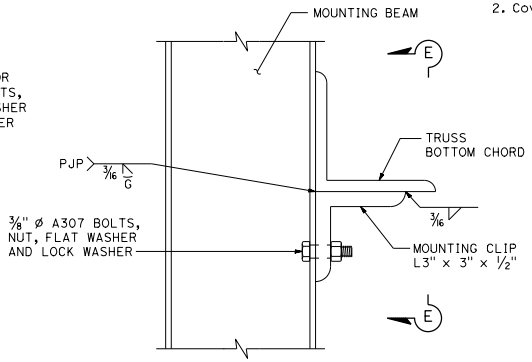

DETAIL 5

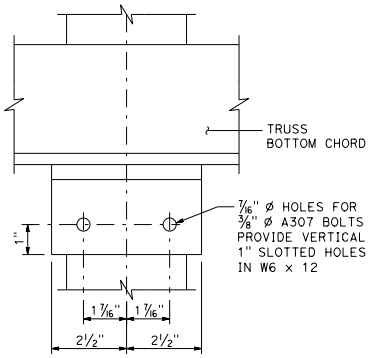

SECTION E-E

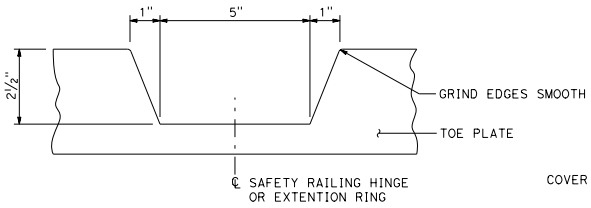

TOE PLATE CUT-OUT DETAIL

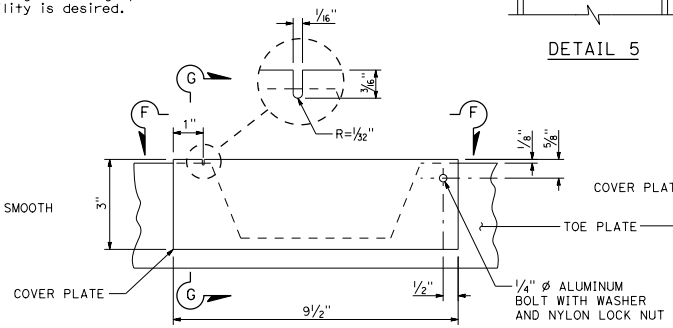

AT SAFETY RAILING HINGE

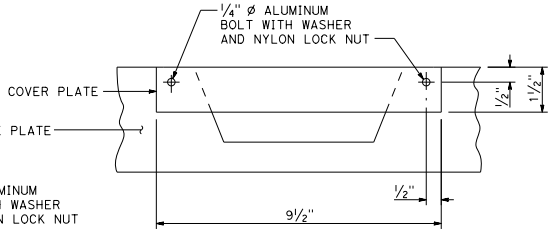

AT RING EXTENTION UNDER CMS

COVER PLATE DETAIL

See Notes 1 and 2

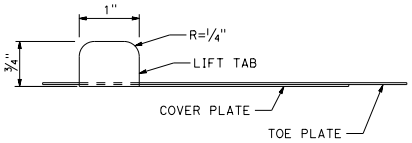

SECTION F-F

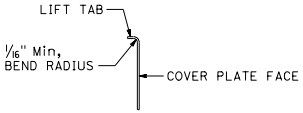

SECTION G-G

STATE OF CALIFORNIA
DEPARTMENT OF TRANSPORTATION

OVERHEAD SIGNS-VERSATILE TRUSS WALKWAY DETAILS No. 3

NO SCALE

S117

7-1-26

2026 STANDARD PLAN S117

Return to Table of Contents

Dist	COUNTY	ROUTE	POST MILES TOTAL PROJECT	SHEET No.	TOTAL SHEETS

REGISTERED CIVIL ENGINEER

September 18, 2026
PLANS APPROVAL DATE

REGISTERED PROFESSIONAL ENGINEER
Mahesh Shrestha
No. C80133
Exp. 9-30-26
CIVIL
STATE OF CALIFORNIA

THE STATE OF CALIFORNIA OR ITS OFFICERS OR AGENTS SHALL NOT BE RESPONSIBLE FOR THE ACCURACY OR COMPLETENESS OF SCANNED COPIES OF THIS PLAN SHEET.

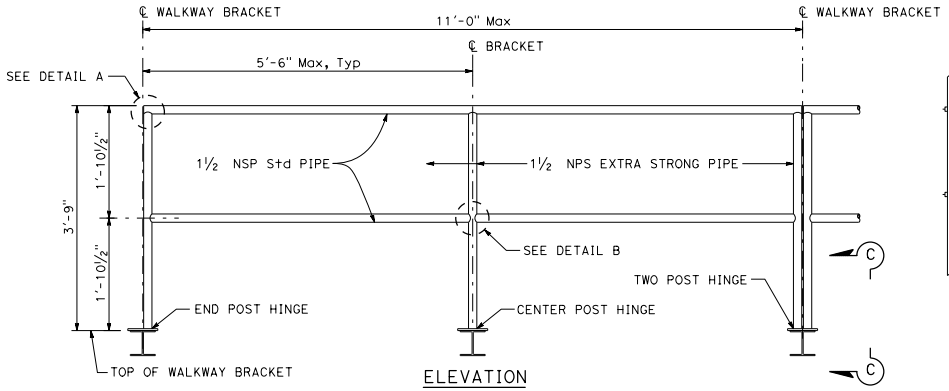

ELEVATION
SAFETY RAILING

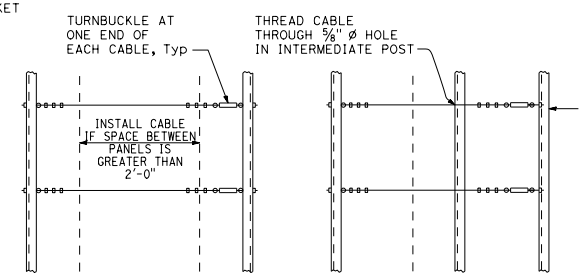

BETWEEN PANELS BEYOND PANELS

UPPER SAFETY CABLE ELEVATION

NOTE: Thread cable through ⅝" ø hole in diagonal members, diagonal members not shown.

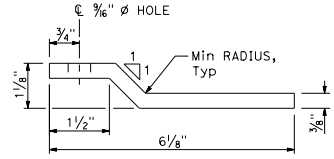

PLAN
KICKER BAR

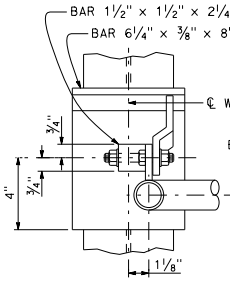

END POST

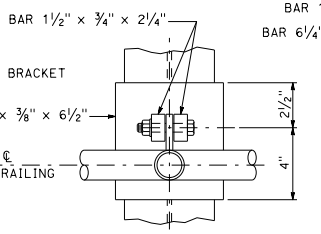

CENTER POST
PLAN

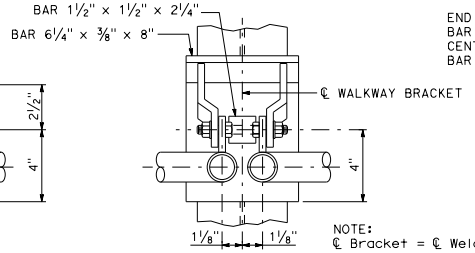

TWO POST

NOTE:
℄ Bracket = ℄ Welded Hinge

WELDED HINGE

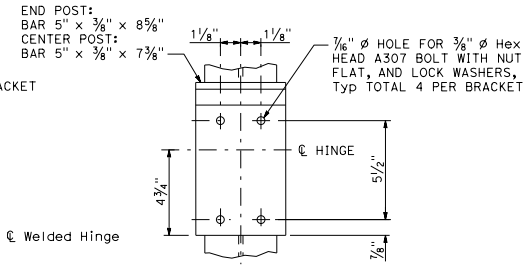

TYPICAL BOLTED (ALTERNATIVE) HINGED CONNECTION

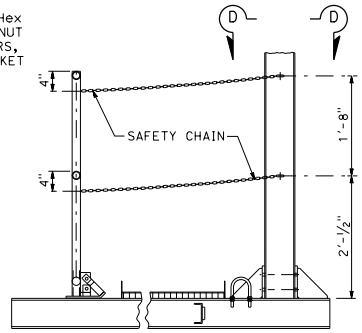

CHAIN ASSEMBLY

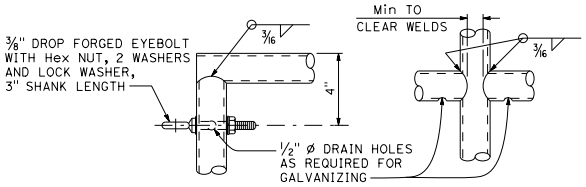

DETAIL A DETAIL B

NOTE: Alternative venting methods may be used if approved by the Engineer.

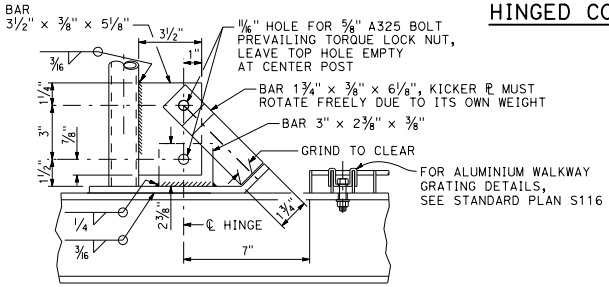

SECTION C-C

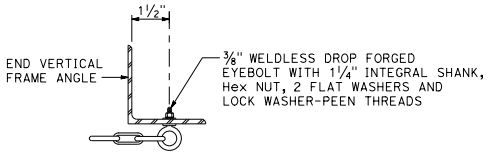

VIEW D-D

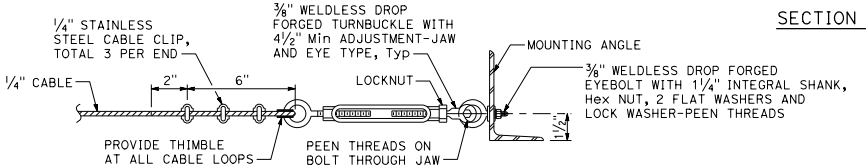

TURNBUCKLE DETAILS

STATE OF CALIFORNIA
DEPARTMENT OF TRANSPORTATION

OVERHEAD SIGNS-VERSATILE TRUSS WALKWAY SAFETY RAILING DETAILS

NO SCALE

S118

7-1-26

Return to Table of Contents

Dist	COUNTY	ROUTE	POST MILES TOTAL PROJECT	SHEET No.	TOTAL SHEETS

REGISTERED CIVIL ENGINEER

September 18, 2026

PLANS APPROVAL DATE

REGISTERED PROFESSIONAL ENGINEER Mahesh Shrestha No. C80133 Exp. 9-30-26 CIVIL STATE OF CALIFORNIA

THE STATE OF CALIFORNIA OR ITS OFFICERS OR AGENTS SHALL NOT BE RESPONSIBLE FOR THE ACCURACY OR COMPLETENESS OF SCANNED COPIES OF THIS PLAN SHEET.

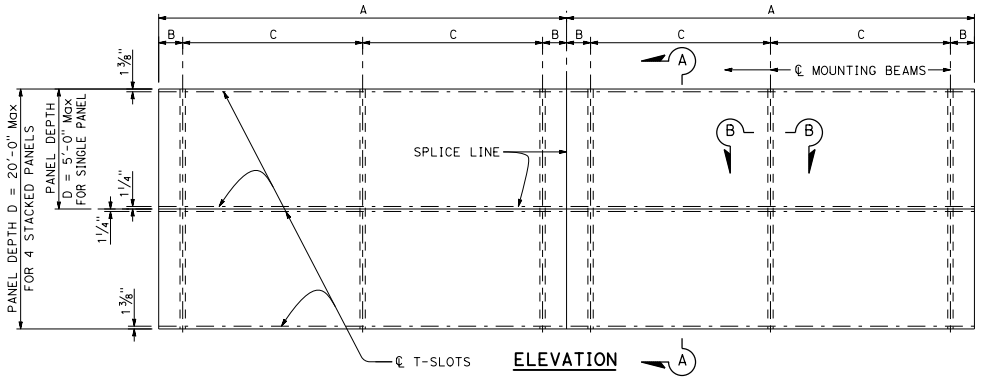

ELEVATION
SIGN

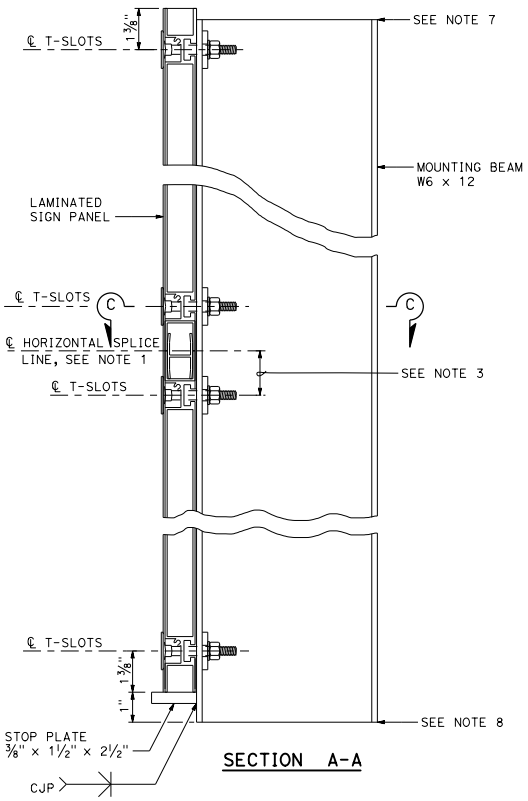

SECTION A-A

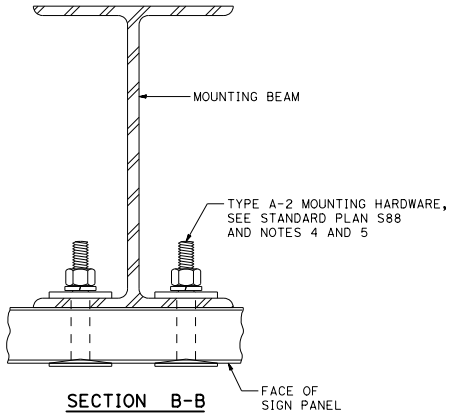

SECTION B-B

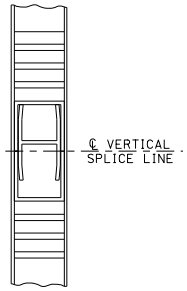

SECTION C-C
Mounting beam not shown

MOUNTING BEAM SPACING TABLE

SIGN PANEL LENGTH *	NUMBER MOUNTING BEAMS	SIGN PANEL OVERHANG	MOUNTING BEAM SPACING
A		B	C
5'-0"	2	9"	3'-6"
6'-0"	2	1'-0"	4'-0"
7'-0"	2	1'-3"	4'-6"
8'-0"	2	1'-6"	5'-0"
9'-0"	2	1'-10"	5'-6"
10'-0"	2	2'-0"	6'-0"
11'-0"	2	2'-0"	7'-0"
12'-0"	2	2'-6"	7'-0"
13'-0"	2	2'-6"	8'-0"
14'-0"	3	1'-0"	6'-0"
15'-0"	3	1'-0"	6'-6"
16'-0"	3	6"	7'-6"
17'-0"	3	1'-0"	7'-6"
18'-0"	3	1'-0"	8'-0"
19'-0"	3	1'-6"	8'-0"
20'-0"	3	2'-0"	8'-0"
21'-0"	4	1'-6"	6'-0"
22'-0"	4	2'-0"	6'-0"
23'-0"	4	1'-0"	7'-0"
24'-0"	4	1'-6"	7'-0"

* Signs longer than 24'-0" are fabricated and mounted as adjoining single panels. The location of the vertical splice line will be determined by the Engineer.

NOTES:

1. The location of the horizontal splice line is dependent on the Contractor for signs greater than 60" in depth.
2. Mounting bolts and clamps are required on each side of the horizontal splice lines at each support beam.
3. Dimension varies from panel to panel. Average value approximate 1".
4. Torque stainless steel sign panel mounting bolts to 100 inch-pounds.
5. Drill through panel at integral track. Install Type A-2 mounting hardware and attach reflective tape.
6. Refer to Standard Plan S115 for mounting beam to truss connection details.
7. For sign panel depths of 70" or less the top of the mounting beam extends beyond the limits of the sign panel. Refer to Standard Plan S115.
8. For sign panel depths of 60" or less, or where a walkway is installed, the bottom of the mounting beam extends further than 1" from the bottom of the sign panel. Refer to Standard Plan S115.
9. The Contractor must verify all dependent dimensions in the field before ordering or fabricating any material.

STATE OF CALIFORNIA
DEPARTMENT OF TRANSPORTATION

OVERHEAD SIGNS-VERSATILE TRUSS SIGN MOUNTING DETAILS LAMINATED PANEL (TYPE A)

NO SCALE

S119

2026 STANDARD PLAN S119

7-1-26

Return to Table of Contents

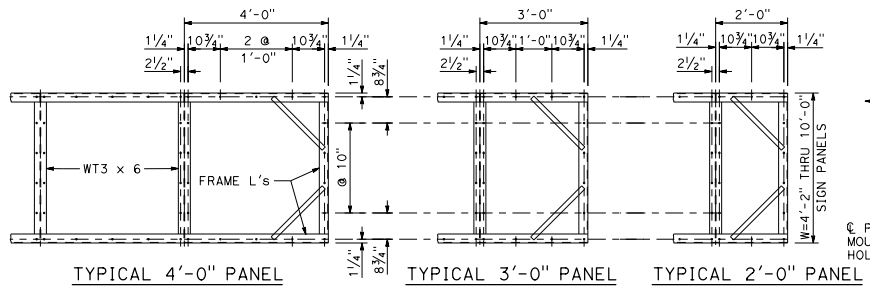

TYPICAL 4'-0" PANEL TYPICAL 3'-0" PANEL TYPICAL 2'-0" PANEL

MOUNTING HOLE SPACING SIGN PANEL AND FRAME

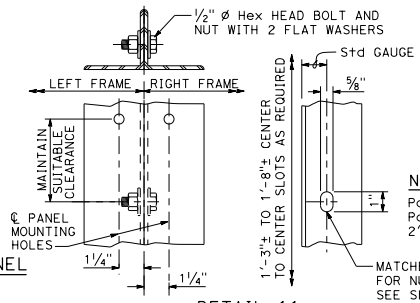

DETAIL 11

FRAME TO FRAME CONNECTION DETAILS

SLOT TABLE	
PANEL DEPTH	No. OF SLOTS
4'-2"	2
5'-0"	3
5'-10"	3
6'-8" AND 7'-6"	4
8'-4" AND 9'-2"	5
10'-0"	6

NOTE:

Panel mounting holes not shown. Panel lengths available in 2'-0" increments.

Dist	COUNTY	ROUTE	POST MILES TOTAL PROJECT	SHEET No.	TOTAL SHEETS

REGISTERED CIVIL ENGINEER

September 18, 2026

PLANS APPROVAL DATE

REGISTERED PROFESSIONAL ENGINEER Mahesh Shrestha No. C80133 Exp. 9-30-26 CIVIL STATE OF CALIFORNIA

THE STATE OF CALIFORNIA OR ITS OFFICERS OR AGENTS SHALL NOT BE RESPONSIBLE FOR THE ACCURACY OR COMPLETENESS OF SCANNED COPIES OF THIS PLAN SHEET.

NOTES:

1. Frames shall be all-welded construction.
2. Panel mounting holes shall be drilled by template. Sign panel may be considered as a template.
3. Drilled and tapped holes ¼" may be used where interference due to welds or structural members is encountered.
4. WT3 x 6 shall be flush with faces of frame angles.
5. Mounting clip angles shall be located such as to allow the top and bottom frame angles of the removable sign panel to lie on a straight horizontal line.
6. Hole for mounting removable sign panel frame may be slotted 1" maximum parallel to the axis of the sign.
7. WT3 x 6 may be crimped at ends to join frame angles. Fillet weld all around.
8. For Table 2, see Standard Plan S121.
9. For sign panel depth of 70" or less the top of the mounting beam extends beyond the limits of the sign panel. Refer to Standard Plan S115.
10. For sign panel depth of 60" or less, or where a walkway is installed, the bottom of the mounting beam extends further than 1" below the clip L.

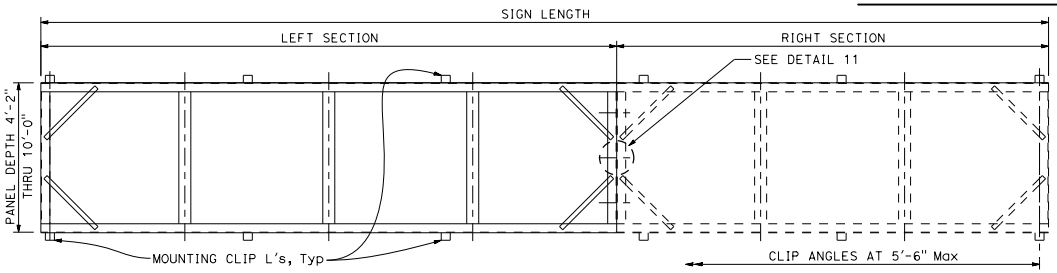

REMOVABLE FRAME GREATER THAN 20'-0"

NOTES:

Frames for signs greater than 20'-0" in length shall be fabricated in two sections with left section a multiple of 4'-0" in length. See Section Length Table.

Sections shall be hoisted into place individually and bolted together as per detail 11 prior to tightening of mounting clip bolts. Bolting two sections together and hoisting simultaneously will not be permitted. For signs up to 20'-0" in height, 2 panels shall be stacked verically. Refer to Section T-T for connection details.

SECTION LENGTH TABLE		
SIGN LENGTH	LEFT SECTION	RIGHT SECTION
22'-0"	12'-0"	10'-0"
23'-0"	12'-0"	11'-0"
24'-0"	12'-0"	12'-0"
25'-0"	12'-0"	13'-0"
26'-0"	12'-0"	14'-0"
27'-0"	12'-0"	15'-0"
28'-0"	16'-0"	12'-0"
29'-0"	16'-0"	13'-0"
30'-0"	16'-0"	14'-0"
31'-0"	16'-0"	15'-0"
32'-0"	16'-0"	16'-0"
33'-0"	16'-0"	17'-0"
34'-0"	16'-0"	18'-0"
35'-0"	16'-0"	19'-0"
36'-0"	20'-0"	16'-0"
37'-0"	20'-0"	17'-0"
38'-0"	20'-0"	18'-0"
39'-0"	20'-0"	19'-0"
40'-0"	20'-0"	20'-0"

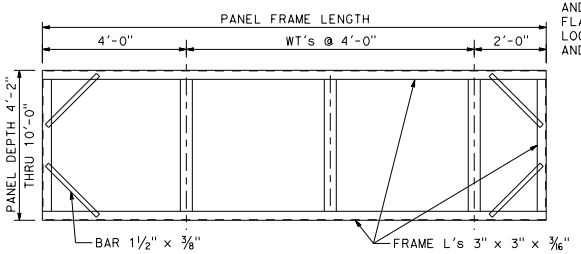

TYPICAL REMOVABLE FRAME

(4'-0" thru 20'-0")

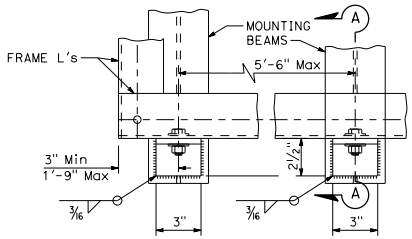

FRAME MOUNTING DETAILS

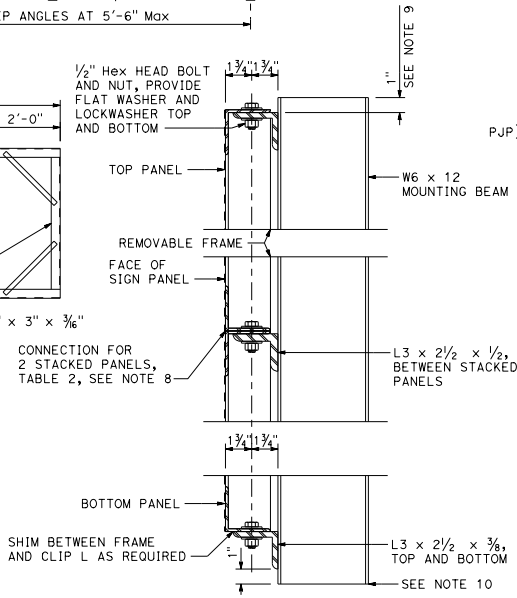

SECTION A-A

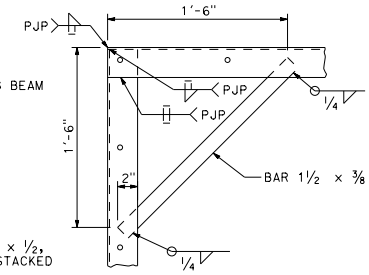

DETAIL 9

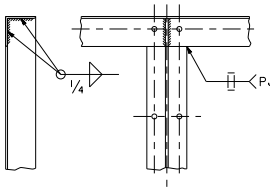

REAR VIEW

DETAIL 10

TYPICAL FRAME JOINT DETAILS

STATE OF CALIFORNIA
DEPARTMENT OF TRANSPORTATION

OVERHEAD SIGNS-VERSATILE TRUSS REMOVABLE SIGN PANEL FRAMES DETAILS No. 1

NO SCALE

S120

7-1-26

Return to Table of Contents

Dist	COUNTY	ROUTE	POST MILES TOTAL PROJECT	SHEET No.	TOTAL SHEETS

REGISTERED CIVIL ENGINEER

September 18, 2026

PLANS APPROVAL DATE

REGISTERED PROFESSIONAL ENGINEER Mahesh Shrestha No. C80133 Exp. 9-30-26 CIVIL STATE OF CALIFORNIA

THE STATE OF CALIFORNIA OR ITS OFFICERS OR AGENTS SHALL NOT BE RESPONSIBLE FOR THE ACCURACY OR COMPLETENESS OF SCANNED COPIES OF THIS PLAN SHEET.

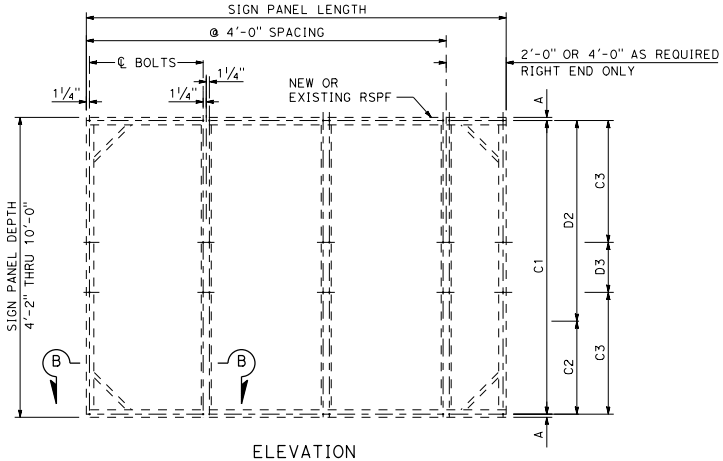

ELEVATION

NEW OR EXISTING REMOVABLE SIGN PANEL FRAME MOUNTING HOLE SPACING

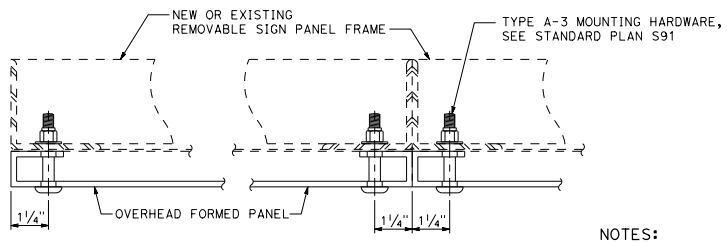

CORNER DETAIL

PANEL CONNECTION

SECTION B-B

NOTES:

1. When constructing a new frame:
   a. Refer to Standard Plan S120 for structural details.
   b. Sign panels shall be considered as a template for drilling holes for mounting bolts.
2. Sign panel mounting holes ½" ø maximum for ⅜" ø bolts.
3. The Contractor shall verify all dependent dimensions in the field before ordering or fabricating any material.

TABLE 1
MOUNTING BOLT SPACING

PANEL DEPTH	A	1 SPACE	2 SPACES		3 SPACES		
		C1	C2	D2	C3	D3	C3
50"	1¼"	3'-11½"					
60"	1¼"		2'-4¾"	2'-4¾"			
70"	1¼"		1'-6¾"	4'-¾"			
80"	1¼"		3'-2¾"	3'-2¾"			
90"	1¼"		3'-2¾"	4'-¾"			
100"	1¼"		4'-¾"	4'-¾"			
110"	1¼"				3'-2¾"	2'-6"	3'-2¾"
120"	1¼"				4'-¾"	1'-8"	4'-¾"

TABLE 2
PANEL DEPTH GREATER THAN 120"

TOTAL PANEL DEPTH	TOP PANEL	BOTTOM PANEL
130"	70"	60"
140"	70"	70"
150"	80"	70"
160"	80"	80"
170"	90"	80"
180"	90"	90"
190"	100"	90"
200"	100"	100"
210"	110"	100"
220"	110"	110"
230"	120"	110"
240"	120"	120"

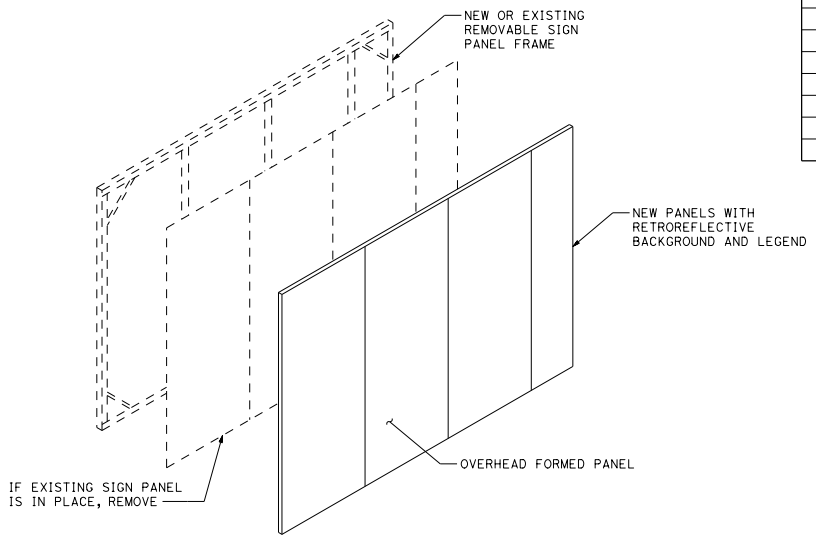

STATE OF CALIFORNIA
DEPARTMENT OF TRANSPORTATION

OVERHEAD SIGNS-VERSATILE TRUSS REMOVABLE SIGN PANEL FRAMES DETAILS No. 2

NO SCALE

S121

7-1-26

2026 STANDARD PLAN S121

Return to Table of Contents

Dist	COUNTY	ROUTE	POST MILES TOTAL PROJECT	SHEET No.	TOTAL SHEETS

REGISTERED CIVIL ENGINEER

September 18, 2026

PLANS APPROVAL DATE

REGISTERED PROFESSIONAL ENGINEER Mahesh Shrestha No. C80133 Exp. 9-30-26 CIVIL STATE OF CALIFORNIA

THE STATE OF CALIFORNIA OR ITS OFFICERS OR AGENTS SHALL NOT BE RESPONSIBLE FOR THE ACCURACY OR COMPLETENESS OF SCANNED COPIES OF THIS PLAN SHEET.

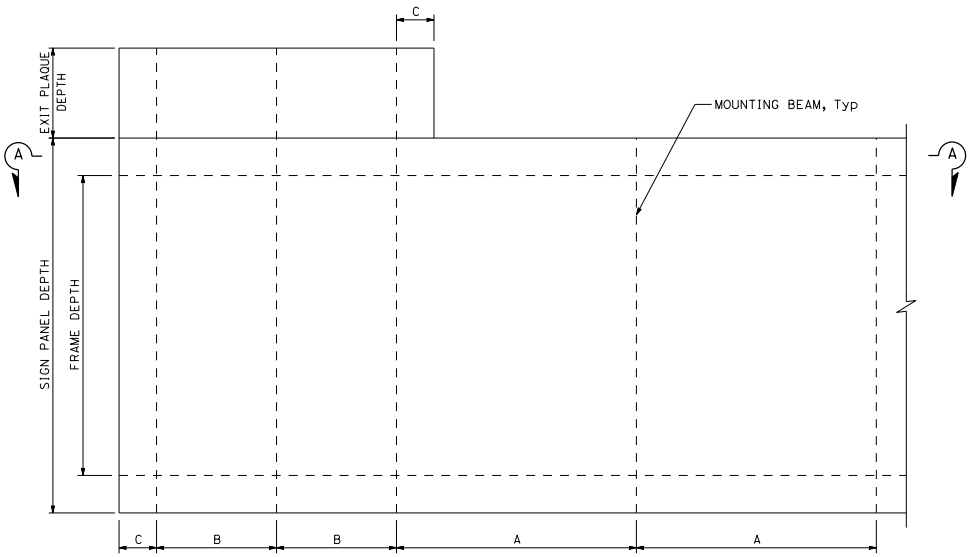

SIGN PANEL ELEVATION

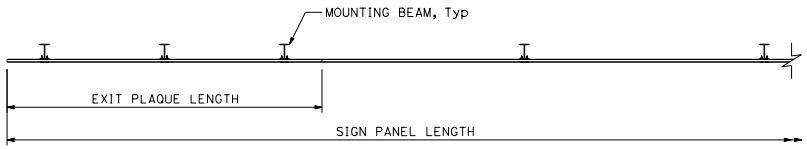

SECTION A-A

MOUNTING BEAM SPACING NOTES AND ABBREVIATIONS:

A: Maximum mounting beam spacing for sign support = 8'-0".

B: Maximum mounting beam spacing for exit plaque support. A minimum of 2 mounting beams are required per exit plaque. Refer to "EXIT PLAQUE MOUNTING BEAM TABLE" for "B" values.

C: Maximum sign panel/exit plaque overhang length. Refer to Standard Plans S119 and S120 for permissible overhang values.

NOTES: Additional mounting beams will be required when walkways are installed. Maximum mounting beam spacing at walkways = 5'-6". Refer to Standard Plan S115 for walkway mounting beam details. When mounting beams are added for walkway or exit plaque support, they are not required to be attached to the sign panels.

EXIT PLAQUE MOUNTING BEAM TABLE

SIGN PANEL DEPTH D	B
D ≤ 80"	8'-0"
80" < D ≤ 100"	8'-0"
100" < D ≤ 120"	8'-0"
120" < D ≤ 150"	7'-0"
150" < D ≤ 180"	6'-0"
180" < D ≤ 210"	7'-0"
210" < D ≤ 240"	4'-0"

STATE OF CALIFORNIA
DEPARTMENT OF TRANSPORTATION

OVERHEAD SIGNS-VERSATILE TRUSS EXIT PLAQUE MOUNTING DETAILS

NO SCALE

S122

2026 STANDARD PLAN S122

7-1-26

Return to Table of Contents

Dist	COUNTY	ROUTE	POST MILES TOTAL PROJECT	SHEET No.	TOTAL SHEETS

REGISTERED CIVIL ENGINEER

September 18, 2026

PLANS APPROVAL DATE

REGISTERED PROFESSIONAL ENGINEER Mahesh Shrestha No. C80133 Exp. 9-30-26 CIVIL STATE OF CALIFORNIA

THE STATE OF CALIFORNIA OR ITS OFFICERS OR AGENTS SHALL NOT BE RESPONSIBLE FOR THE ACCURACY OR COMPLETENESS OF SCANNED COPIES OF THIS PLAN SHEET.

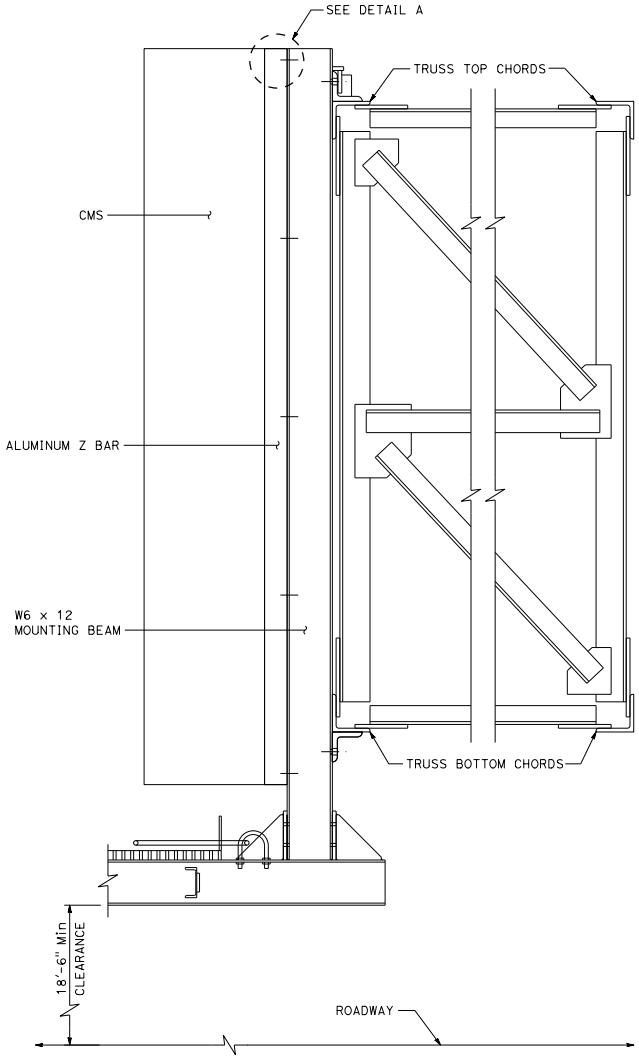

ELEVATION

(Diagonal and wind brace members not shown)

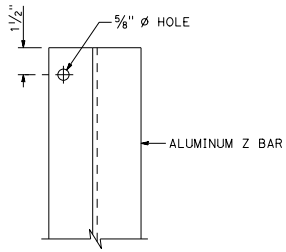

DETAIL A

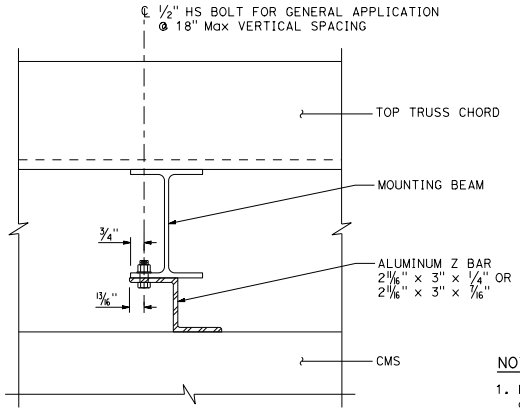

DETAIL B

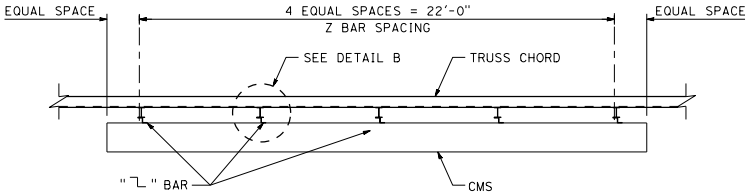

ALUMINUM Z BAR SPACING CMS LOAD CASE 1

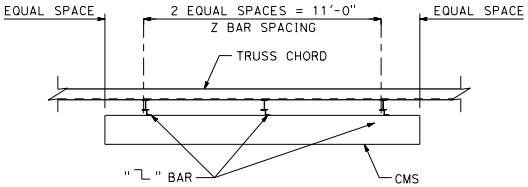

ALUMINUM Z BAR SPACING CMS LOAD CASE 2

NOTES:

1. For mounting beam to truss chord connection details, see Standard Plan S115.
2. For horizontal and vertical position of CMS, see Project Plans.
3. Contractor shall verify Z bar spacing prior to drilling holes in mounting channels.
4. If walkway is required per Project Plans, refer to Standard Plan S115 for details. Minimum vertical clearance shall be measured to underside of walkway.

STATE OF CALIFORNIA
DEPARTMENT OF TRANSPORTATION

OVERHEAD SIGNS-VERSATILE TRUSS CMS MOUNTING DETAILS

NO SCALE

S123

2026 STANDARD PLAN S123

7-1-26

Return to Table of Contents

Dist	COUNTY	ROUTE	POST MILES TOTAL PROJECT	SHEET No.	TOTAL SHEETS

REGISTERED CIVIL ENGINEER

September 18, 2026
PLANS APPROVAL DATE

REGISTERED PROFESSIONAL ENGINEER
Mahesh Shrestha
No. C80133
Exp. 9-30-26
CIVIL
STATE OF CALIFORNIA

THE STATE OF CALIFORNIA OR ITS OFFICERS OR AGENTS SHALL NOT BE RESPONSIBLE FOR THE ACCURACY OR COMPLETENESS OF SCANNED COPIES OF THIS PLAN SHEET.

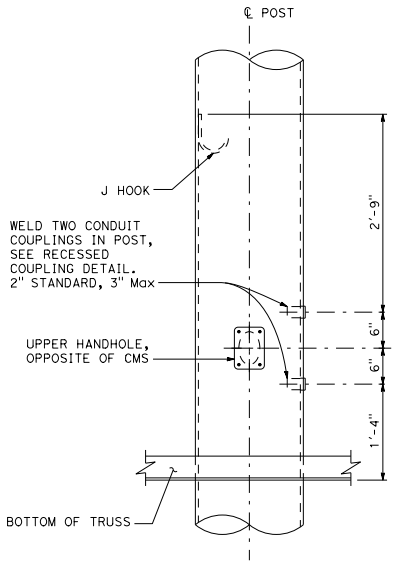

ELEVATION AT POST

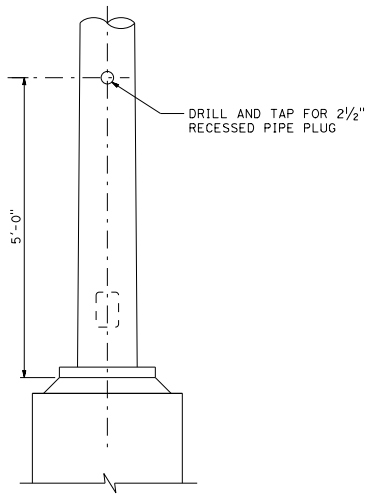

PIPE PLUG DETAIL

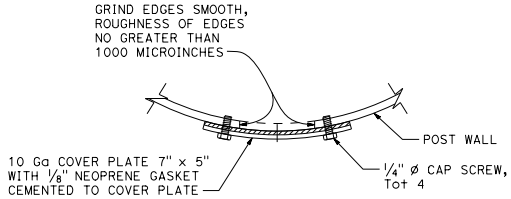

PLAN

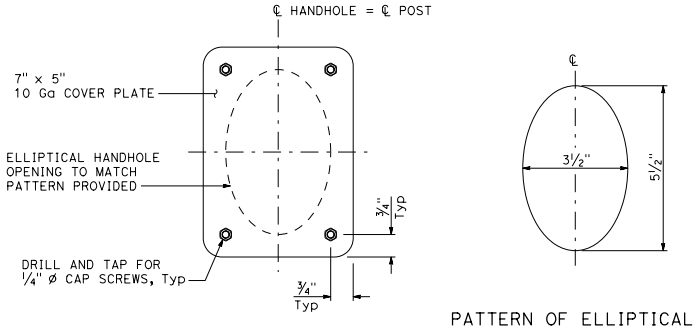

ELEVATION

PATTERN OF ELLIPTICAL HANDHOLE CUT OUT

UPPER HANDHOLE AND COVER DETAILS

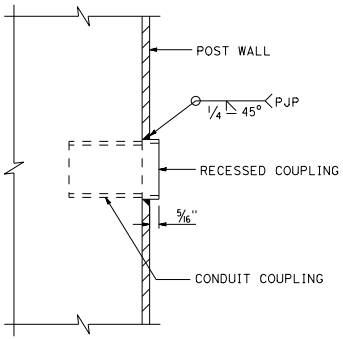

RECESSED COUPLING DETAIL

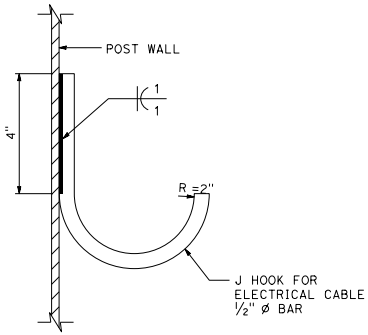

J HOOK DETAIL

STATE OF CALIFORNIA
DEPARTMENT OF TRANSPORTATION

OVERHEAD SIGNS-VERSATILE TRUSS ADDITIONAL DETAILS FOR CMS

NO SCALE

S123B

2026 STANDARD PLAN S123B

7-1-26

Return to Table of Contents

Dist	COUNTY	ROUTE	POST MILES TOTAL PROJECT	SHEET No.	TOTAL SHEETS

REGISTERED CIVIL ENGINEER

September 18, 2026

PLANS APPROVAL DATE

REGISTERED PROFESSIONAL ENGINEER Mahesh Shrestha No. C80133 Exp. 9-30-26 CIVIL STATE OF CALIFORNIA

THE STATE OF CALIFORNIA OR ITS OFFICERS OR AGENTS SHALL NOT BE RESPONSIBLE FOR THE ACCURACY OR COMPLETENESS OF SCANNED COPIES OF THIS PLAN SHEET.

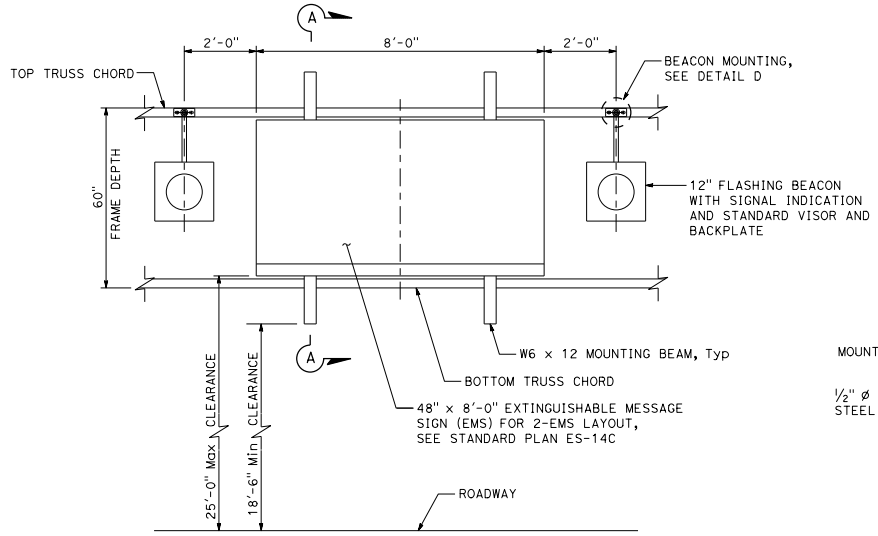

ELEVATION

Vertical and diagonal truss members not shown

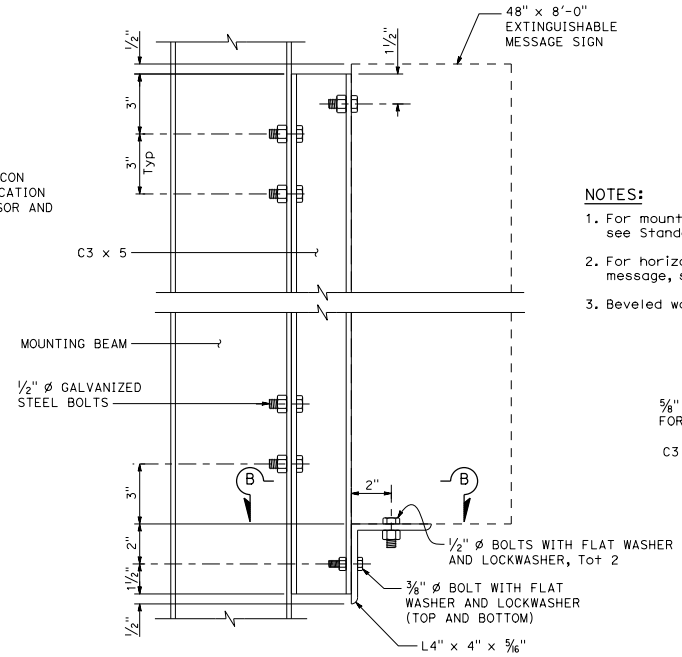

SECTION A-A

NOTES:

1. For mounting beam to truss chord connection details, see Standard Plan S115.
2. For horizontal and vertical position of extinguishable message, see Project Plans.
3. Beveled washers must be used at the channel member flanges.

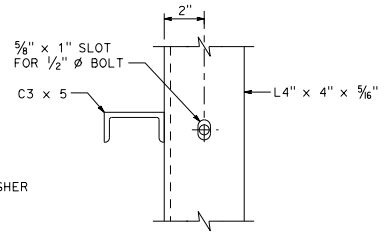

SECTION B-B

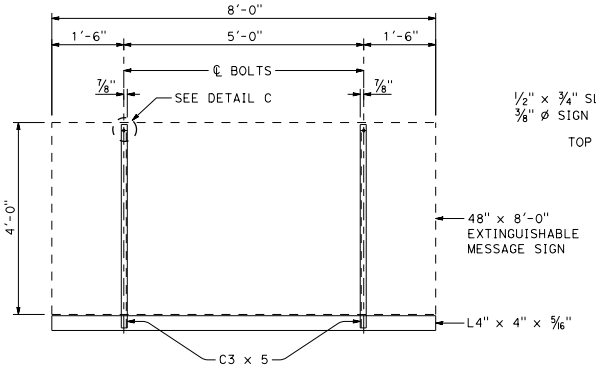

DETAIL H

SIGN MOUNTING

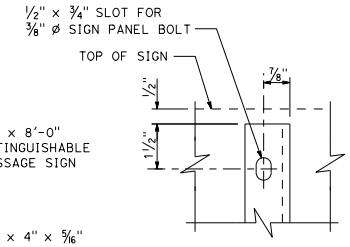

DETAIL C

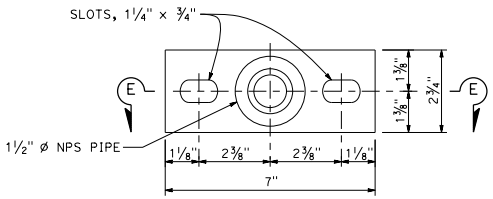

DETAIL D

Top truss chord not shown

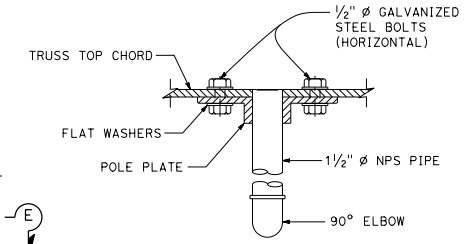

SECTION E-E

Refer to Standard Plan ES-14C for additional details

STATE OF CALIFORNIA
DEPARTMENT OF TRANSPORTATION

OVERHEAD SIGNS-VERSATILE TRUSS EMS AND FLASHING BEACON DETAILS

NO SCALE

S124

7-1-26

2026 STANDARD PLAN S124

Return to Table of Contents

Dist	COUNTY	ROUTE	POST MILES TOTAL PROJECT	SHEET No.	TOTAL SHEETS

REGISTERED ELECTRICAL ENGINEER

September 18, 2026
PLANS APPROVAL DATE

REGISTERED PROFESSIONAL ENGINEER Bhanupriya Sharma No. E23752 Exp. 12-31-27 ELECTRICAL STATE OF CALIFORNIA

THE STATE OF CALIFORNIA OR ITS OFFICERS OR AGENTS SHALL NOT BE RESPONSIBLE FOR THE ACCURACY OR COMPLETENESS OF SCANNED COPIES OF THIS PLAN SHEET.

ANNOTATION

SYMBOL	DESCRIPTION
AB	ABANDON. IF APPLIED TO CONDUIT, REMOVE CONDUCTORS
BC	INSTALL PULL BOX IN EXISTING CONDUIT RUN
BP	PEDESTRIAN BARRICADE, TYPE AS INDICATED ON PLAN
CB	INSTALL CONDUIT INTO EXISTING PULL BOX
CC	CONNECT NEW AND EXISTING CONDUIT. REMOVE EXISTING CONDUCTORS AND INSTALL CONDUCTORS AS INDICATED
CF	CONDUIT TO REMAIN FOR FUTURE USE. REMOVE CONDUCTORS. INSTALL PULL TAPE
DH	DETECTOR HANDHOLE
FA	FOUNDATION TO BE ABANDONED
IS	INSTALL SIGN ON SIGNAL MAST ARM
NS	NO SLIP BASE ON STANDARD
PEC	PHOTOELECTRIC CONTROL
PEU	PHOTOELECTRIC UNIT
RC	EQUIPMENT OR MATERIAL TO BE REMOVED AND BECOME THE PROPERTY OF THE CONTRACTOR
RL	RELOCATE EQUIPMENT
RR	REMOVE AND REUSE EQUIPMENT
RS	REMOVE AND SALVAGE EQUIPMENT
SC	SPLICE NEW TO EXISTING CONDUCTORS
SD	SERVICE DISCONNECT
TSP	TELEPHONE SERVICE POINT

STANDARD

NEW	EXISTING	TYPE
		15
		15D
		15 STRUCTURE
		15D STRUCTURE
		21
		21D
		21 STRUCTURE
		21D STRUCTURE
		30
		31
		32

SOFFIT AND WALL-MOUNTED LUMINAIRES

SYMBOL	DESCRIPTION
	PENDANT SOFFIT LUMINAIRE
	FLUSH-MOUNTED SOFFIT LUMINAIRE
	WALL-MOUNTED LUMINAIRE
	EXISTING SOFFIT OR WALL-MOUNTED LUMINAIRE TO REMAIN UNMODIFIED
M	EXISTING SOFFIT OR WALL-MOUNTED LUMINAIRE TO BE MODIFIED AS SPECIFIED

NOTE:
Arrow indicates "street side" of luminaire.

MISCELLANEOUS ELECTROLIERS

NEW	EXISTING	DESCRIPTION
		LUMINAIRE ON WOOD POLE
		NON-STANDARD ELECTROLIER (SEE PROJECT LEGEND)
		CITY ELECTROLIER
		ELECTROLIER FOUNDATION (FUTURE INSTALLATION)

STATE OF CALIFORNIA
DEPARTMENT OF TRANSPORTATION

ELECTRICAL SYSTEMS (LEGEND)

NO SCALE

ES-1A

2026 STANDARD PLAN ES-1A

7-1-26

Return to Table of Contents

Dist	COUNTY	ROUTE	POST MILES TOTAL PROJECT	SHEET No.	TOTAL SHEETS

REGISTERED ELECTRICAL ENGINEER

September 18, 2026
PLANS APPROVAL DATE

REGISTERED PROFESSIONAL ENGINEER Bhanupriya Sharma No. E23752 Exp. 12-31-27 ELECTRICAL STATE OF CALIFORNIA

THE STATE OF CALIFORNIA OR ITS OFFICERS OR AGENTS SHALL NOT BE RESPONSIBLE FOR THE ACCURACY OR COMPLETENESS OF SCANNED COPIES OF THIS PLAN SHEET.

CONDUIT

NEW	EXISTING	DESCRIPTION
C	c	COMMUNICATION CONDUIT
		CONDUIT TERMINATION
FO	fo	FIBER OPTIC CONDUIT
F	f	FIRE ALARM CONDUIT
		LIGHTING CONDUIT, UNLESS OTHERWISE INDICATED OR NOTED
T	t	TELEPHONE CONDUIT
		TRAFFIC SIGNAL CONDUIT
R	r	CONDUIT RISER ATTACHED TO THE STRUCTURE OR SERVICE POLE

SERVICE EQUIPMENT

NEW	EXISTING	DESCRIPTION
OH	oh	OVERHEAD LINES
		POLE GUY WITH ANCHOR
III	III	SERVICE EQUIPMENT ENCLOSURE TYPE. DOOR INDICATES FRONT OF ENCLOSURE
T	T	TELEPHONE DEMARCATION CABINET
		UTILITY TRANSFORMER - GROUND MOUNTED
U	U	WOOD POLE, "U" INDICATES UTILITY OWNED

POLE-MOUNTED SERVICE DESIGNATION

SYMBOL	DESCRIPTION
TYPE H SERVICE, 28'-10"	TYPE OF INSTALLATION AND POLE HEIGHT ABOVE GRADE

FLASHING BEACON

NEW	EXISTING	DESCRIPTION
R	R	FLASHING BEACON (ONE VEHICLE SIGNAL HEAD WITH BACKPLATE AND VISOR) "R" INDICATES RED INDICATION "Y" INDICATES YELLOW INDICATION
Y Y	Y Y	FLASHING BEACON WITH TYPE 15-FBS STANDARD AND A SIGN.
R R	R R	FLASHING BEACON WITH TYPES 9, 9A OR 9B SIGN UNLESS OTHERWISE SPECIFIED OR INDICATED

SIGNAL EQUIPMENT

NEW	EXISTING	DESCRIPTION
		CONTROLLER ASSEMBLY, DOOR INDICATES FRONT OF CABINET
		GUARD POST
PV	PV	MODIFICATIONS OF BASIC SYMBOL: "L" INDICATES ALL NON-ARROW SECTIONS LOUVERED "LG" INDICATES LOUVERED GREEN SECTION ONLY "PV" INDICATES ALL 12" SECTIONS PROGRAMMED VISIBILITY "8" INDICATES ALL 8" SECTIONS (ONLY WHEN SPECIFIED) "PHBF" INDICATES PEDESTRIAN HYBRID BEACON FACE
		OPTICAL DETECTOR FOR THE EMERGENCY VEHICLE DETECTION
		PEDESTRIAN BARRICADE
		PEDESTRIAN SIGNAL HEAD
		POST WITH PUSH BUTTON
		STANDARD WITH A SIGNAL MAST ARM, ATTACHED VEHICLE SIGNAL HEADS AND STREET NAME SIGN
		STANDARD WITH LUMINAIRE AND SIGNAL MAST ARMS AND ATTACHED VEHICLE SIGNAL HEADS
		TYPE 1 STANDARD WITH ATTACHED VEHICLE SIGNAL HEADS
		TYPE 15TS STANDARD WITH VEHICLE SIGNAL HEAD, PEDESTRIAN SIGNAL HEAD, AND LUMINAIRE
		TYPE 21TS STANDARD WITH VEHICLE SIGNAL HEAD, PEDESTRIAN SIGNAL HEAD, AND LUMINAIRE
		VEHICLE SIGNAL HEAD CONSISTING OF RED, YELLOW, AND GREEN SECTIONS
		VEHICLE SIGNAL HEAD CONSISTING OF RED, YELLOW, AND GREEN LEFT ARROW SECTIONS (TYPICAL)
		VEHICLE SIGNAL HEAD CONSISTING OF RED AND YELLOW SECTIONS WITH AN UP GREEN ARROW SECTION
		VEHICLE SIGNAL HEAD (5 SECTION) CONSISTING OF RED, YELLOW, AND GREEN SECTIONS WITH YELLOW AND GREEN RIGHT ARROW SECTIONS
		VEHICLE SIGNAL HEAD WITH ANGLE VISOR

NOTES:

1. All signal sections shall be 12" unless shown otherwise.
2. Signal heads shall be provided with backplates unless shown otherwise.

OVERHEAD SIGN

NEW	EXISTING	DESCRIPTION
		DOUBLE POST, SINGLE SIGN
		DOUBLE POST, SINGLE SIGN WITH ELECTROLIER
		SINGLE POST, DOUBLE SIGN, BALANCED BUTTERFLY
		SINGLE POST, SINGLE SIGN, BALANCED BUTTERFLY
		SINGLE POST, SINGLE SIGN, FULL CANTILEVER
		SINGLE POST, SINGLE SIGN, FULL CANTILEVER WITH ELECTROLIER
		SINGLE SIGN MOUNTED ON STRUCTURE

STATE OF CALIFORNIA
DEPARTMENT OF TRANSPORTATION

ELECTRICAL SYSTEMS (LEGEND)

NO SCALE

ES-1B

7-1-26

2026 STANDARD PLAN ES-1B

Return to Table of Contents

Dist	COUNTY	ROUTE	POST MILES TOTAL PROJECT	SHEET No.	TOTAL SHEETS

REGISTERED ELECTRICAL ENGINEER

September 18, 2026
PLANS APPROVAL DATE

REGISTERED PROFESSIONAL ENGINEER Bhanupriya Sharma No. E23752 Exp. 12-31-27 ELECTRICAL STATE OF CALIFORNIA

THE STATE OF CALIFORNIA OR ITS OFFICERS OR AGENTS SHALL NOT BE RESPONSIBLE FOR THE ACCURACY OR COMPLETENESS OF SCANNED COPIES OF THIS PLAN SHEET.

EQUIPMENT DESIGNATION

SIGN:

SIGN No. 12345 — EQUIPMENT IDENTIFICATION CHARACTERS

10 OSL SCL 1.0

- 1.0 — TRANSFORMER RATING (kVA)
- SCL — LIGHTING CONTROL TYPE
- 10 — NUMBER OF OVERHEAD SIGN LUMINAIRES

LIGHTING STANDARD, SIGNAL AND LIGHTING STANDARD:

L2745 - 15'-0"

- 15'-0" — MAST ARM LENGTH
- L2745 — EQUIPMENT IDENTIFICATION CHARACTERS

SOFFIT:

L98765 — EQUIPMENT IDENTIFICATION CHARACTERS

NOTE:
EXISTING EQUIPMENT IDENTIFICATION CHARACTERS ARE SHOWN IN PARENTHESIS

NEW	EXISTING	DESCRIPTION
B	(b)	POLE, POST OR STANDARD DESIGNATION

MISCELLANEOUS EQUIPMENT

NEW	EXISTING	DESCRIPTION
CMS	cms	CHANGEABLE MESSAGE SIGN
		CAMERA
		HIGHWAY ADVISORY RADIO POLE AND ANTENNA
EMS	ems	EXTINGUISHABLE MESSAGE SIGN
M V	m v	DETECTION DEVICE M = MICROWAVE SENSOR V = VIDEO DETECTION SENSOR
		RADAR SPEED FEEDBACK SIGN

CONDUIT AND CONDUCTORS

NEW CONDUIT RUN NUMBER — PAIR

7 — 3½"C, 2#10 (Ltg), 2 DLC, 12P#18, 1-CATEGORY 6 CABLE (CAMERA), 3-3CSC.

- 2#10 (Ltg), 2 DLC, 12P#18, 1-CATEGORY 6 CABLE (CAMERA), 3-3CSC. — NUMBER AND SIZE OF CONDUCTORS AND CABLES
- 3½"C — SIZE OF CONDUIT IN INCHES

EXISTING CONDUIT RUN NUMBER

7 — Exist 3½"C, 2#10 (Ltg)

WIRING COMPONENTS

SYMBOL	DESCRIPTION
	EXTERNAL CONDUCTOR
	CONDUCTOR OR BUS
	TIE POINT
	CONTACTOR COIL
	CONTACTOR, NO CONTACT
	TERMINAL BLOCKS
	CONTACTOR, NC CONTACT
	ENCLOSURE BOND
	GROUNDING ELECTRODE
	CIRCUIT BREAKER
	RECEPTACLE

HANDHOLES, PULL BOXES, AND VAULTS

NEW	EXISTING	DESCRIPTION
DH	dh	DETECTOR HANDHOLE
		PULL BOX, No. 5 UNLESS OTHERWISE INDICATED
V	v	VAULT

DESIGNATION — 6(E) — TYPE

DESIGNATIONS:

- 3 No. 3½ PULL BOX
- 5 No. 5 PULL BOX
- 6 No. 6 PULL BOX
- 7 No. 7 PULL BOX (CEILING)
- 8 No. 8 PULL BOX
- 9 No. 9 PULL BOX (STRUCTURE)
- 9A No. 9A PULL BOX (STRUCTURE)

TYPE:

- (E) EXTENDED PULL BOX
- (T) TRAFFIC PULL BOX
- (TR) TAMPER-RESISTANT PULL BOX

DETAILS

- STANDARD PLAN SHEET NUMBER
- DETAIL, NUMBER, SECTION, TYPE, OR ELEVATION

PHASE

PEDESTRIAN — ø1, ø2, ø2P, etc. — PHASE

TRAFFIC PHASE IDENTIFICATION FOR SIGNALS, DETECTORS, AND PHASE DIAGRAMS

VEHICLE DETECTOR DESIGNATION

5 J 9 U

- U — INPUT FILE (U = UPPER, L = LOWER)
- 9 — SLOT NUMBER IN INPUT FILE (1 TO 9)
- J — INPUT FILE (I OR J)
- 5 — PHASE (1 TO 8)

DETECTORS

NEW	EXISTING	DESCRIPTION
		TYPE A LOOP DETECTOR. OUTLINE OF SAW CUT SHOWN
		TYPE B LOOP DETECTOR. OUTLINE OF SAW CUT SHOWN
		TYPE C LOOP DETECTOR. OUTLINE OF SAW CUT SHOWN
		TYPE D LOOP DETECTOR. OUTLINE OF SAW CUT SHOWN
		TYPE E LOOP DETECTOR. OUTLINE OF SAW CUT SHOWN
		TYPE F LOOP DETECTOR. OUTLINE OF SAW CUT SHOWN
		TYPE Q LOOP DETECTOR. OUTLINE OF SAW CUT SHOWN
		MICROWAVE OR VIDEO DETECTION ZONE
		ROADWAY SENSOR, PIEZOELECTRIC AXLE SENSOR UNLESS OTHERWISE INDICATED

STATE OF CALIFORNIA
DEPARTMENT OF TRANSPORTATION

ELECTRICAL SYSTEMS (LEGEND)

NO SCALE

ES-1C

2026 STANDARD PLAN ES-1C

7-1-26

Return to Table of Contents

Dist	COUNTY	ROUTE	POST MILES TOTAL PROJECT	SHEET No.	TOTAL SHEETS

REGISTERED ELECTRICAL ENGINEER

September 18, 2026
PLANS APPROVAL DATE

REGISTERED PROFESSIONAL ENGINEER Bhanupriya Sharma No. E23752 Exp. 12-31-27 ELECTRICAL STATE OF CALIFORNIA

THE STATE OF CALIFORNIA OR ITS OFFICERS OR AGENTS SHALL NOT BE RESPONSIBLE FOR THE ACCURACY OR COMPLETENESS OF SCANNED COPIES OF THIS PLAN SHEET.

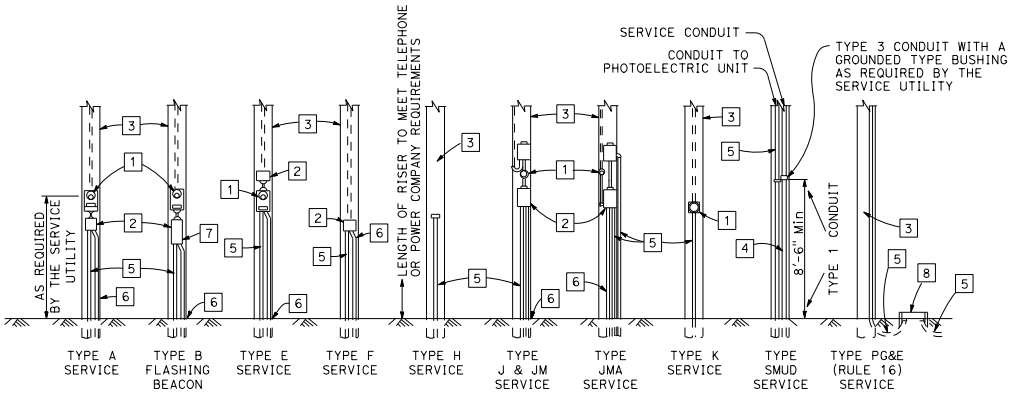

POLE MOUNTED SERVICE INSTALLATIONS

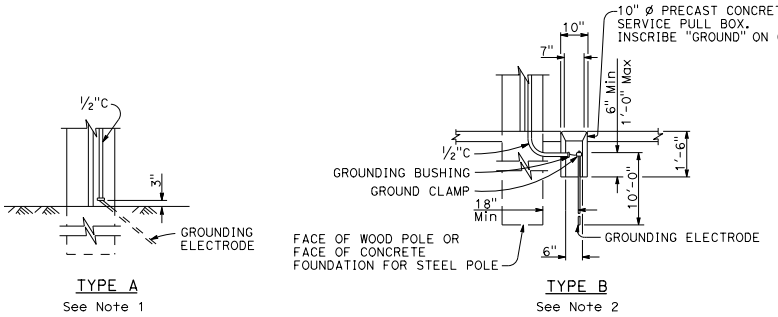

SERVICE GROUNDING

LEGEND:

1. METER SOCKET.
2. SERVICE ENCLOSURE WITH A MINIMUM 60 A RATED MAIN CIRCUIT BREAKER, UNLESS OTHERWISE SHOWN.
3. A. UTILITY OWNED POLE. THE SERVICE UTILITY WILL FURNISH AND INSTALL REQUIRED SERVICE RISER, PEU WITH CONDUCTORS AND OTHER EQUIPMENT AS NEEDED.
   B. STATE OWNED POLE. THE CONTRACTOR SHALL FURNISH AND INSTALL REQUIRED SERVICE RISER AND EQUIPMENT.
4. 2"C, SERVICE CONDUIT MUST HAVE A GROUNDED TYPE BUSHING INSTALLED AT UPPER END OF THE METALLIC POLE RISER CONDUIT. A GROUNDING CONDUCTOR MUST BE ATTACHED TO THE BUSHING, CARRIED THROUGH THE CONDUIT RUN AND ATTACHED TO THE SERVICE EQUIPMENT ENCLOSURE'S GROUNDING ELECTRODE.
5. CONDUIT, LENGTH AND SIZE AS REQUIRED.
6. ½"C, 1#6. SEE SERVICE GROUNDING.
7. FLASHING BEACON ENCLOSURE.
8. SERVICE PULL BOX, No. 5 UNLESS OTHERWISE NOTED, FURNISHED AND INSTALLED BY THE CONTRACTOR. SERVICE UTILITY SHALL DETERMINE THE EXACT LOCATION.

NOTES:

1. Ground clamp and required fittings must be accessible. Conduit must extend to protect grounding electrode conductor from mechanical damage.
2. Use where service utility requires 18" clearance between grounding electrode and the pole or service equipment enclosure. Installation shown is for sidewalk or paved areas. In unpaved areas, omit special service pull box and locate ground clamp above ground or locate ground clamp in nearest pull box.

STATE OF CALIFORNIA
DEPARTMENT OF TRANSPORTATION

ELECTRICAL SYSTEMS (SERVICE EQUIPMENT)

NO SCALE

ES-2A

2026 STANDARD PLAN ES-2A

7-1-26

Return to Table of Contents

Dist	COUNTY	ROUTE	POST MILES TOTAL PROJECT	SHEET No.	TOTAL SHEETS

REGISTERED ELECTRICAL ENGINEER

September 18, 2026
PLANS APPROVAL DATE

REGISTERED PROFESSIONAL ENGINEER Bhanupriya Sharma No. E23752 Exp. 12-31-27 ELECTRICAL STATE OF CALIFORNIA

THE STATE OF CALIFORNIA OR ITS OFFICERS OR AGENTS SHALL NOT BE RESPONSIBLE FOR THE ACCURACY OR COMPLETENESS OF SCANNED COPIES OF THIS PLAN SHEET.

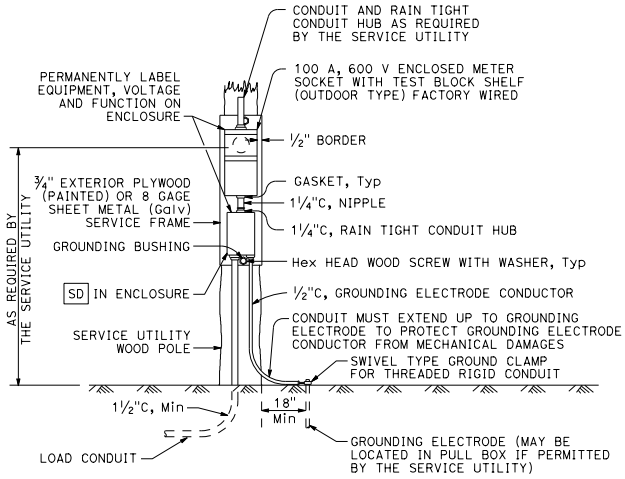

TYPE SCE-1

DETAIL A

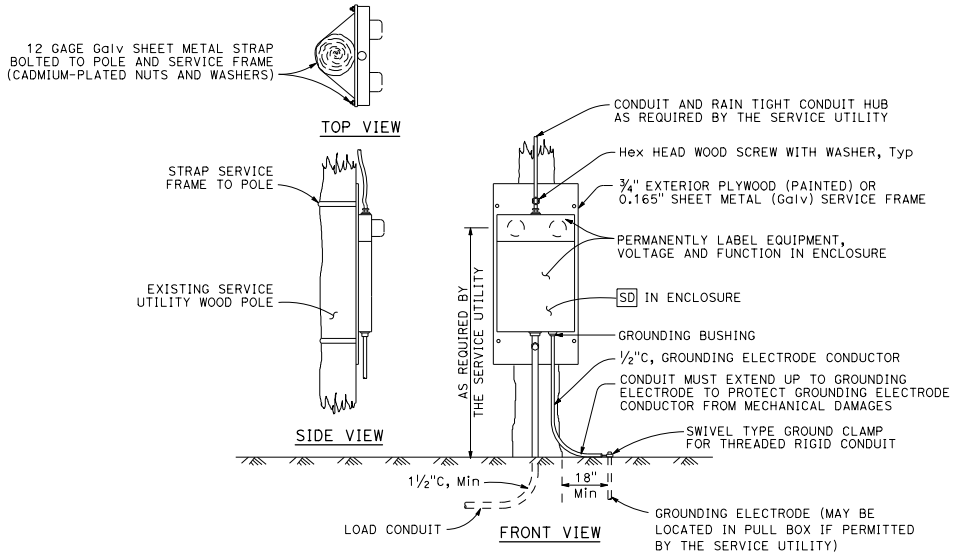

TYPE SCE-2

DETAIL B

STATE OF CALIFORNIA
DEPARTMENT OF TRANSPORTATION

ELECTRICAL SYSTEMS (SERVICE EQUIPMENT)

NO SCALE

ES-2B

2026 STANDARD PLAN ES-2B

7-1-26

Return to Table of Contents

Dist	COUNTY	ROUTE	POST MILES TOTAL PROJECT	SHEET No.	TOTAL SHEETS

REGISTERED ELECTRICAL ENGINEER

September 18, 2026
PLANS APPROVAL DATE

REGISTERED PROFESSIONAL ENGINEER Bhanupriya Sharma No. E23752 Exp. 12-31-27 ELECTRICAL STATE OF CALIFORNIA

THE STATE OF CALIFORNIA OR ITS OFFICERS OR AGENTS SHALL NOT BE RESPONSIBLE FOR THE ACCURACY OR COMPLETENESS OF SCANNED COPIES OF THIS PLAN SHEET.

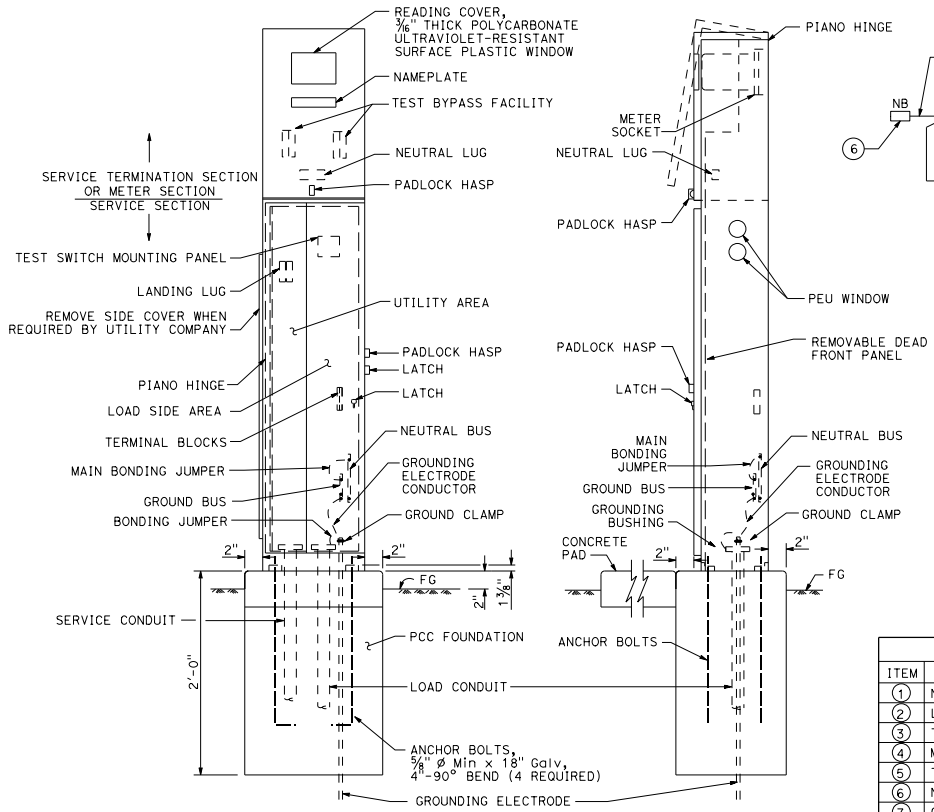

TYPE III-AF SERVICE EQUIPMENT ENCLOSURE (TYPICAL)

DETAIL A

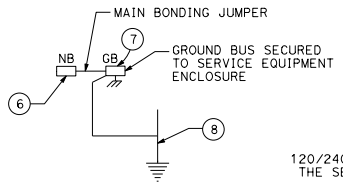

DETAIL D

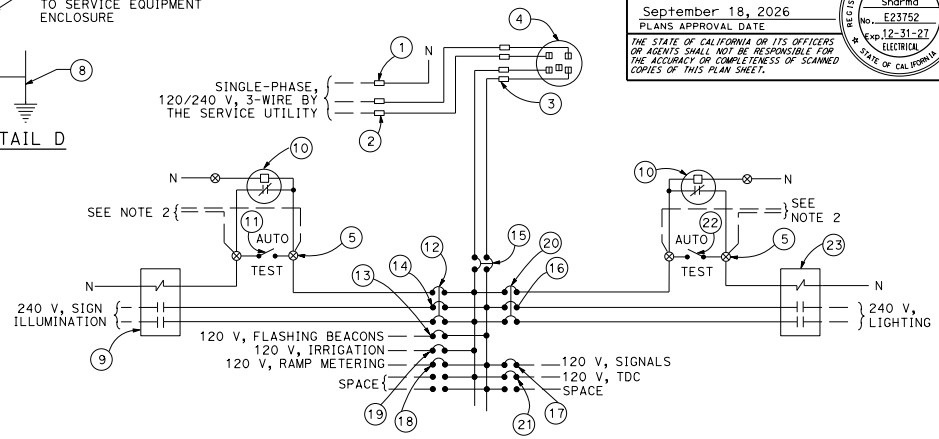

120/240 V SERVICE WIRING DIAGRAM (TYPICAL)

DETAIL C

TYPE III-A SERVICE EQUIPMENT ENCLOSURE LEGEND (120/240 V)					
ITEM	COMPONENT	NAMEPLATE DESCRIPTION	ITEM	COMPONENT	NAMEPLATE DESCRIPTION
1	NEUTRAL LUG		13	15 A, 120 V, 1P, CB	FLASHING BEACON
2	LANDING LUG		14	30 A, 240 V, 2P, CB	SIGN ILLUMINATION
3	TEST BYPASS FACILITY		15	100 A, 240 V, 2P, CB	MAIN BREAKER
4	METER SOCKET AND SUPPORT		16	30 A, 240 V, 2P, CB	LIGHTING
5	TERMINAL BLOCKS		17	50 A, 120 V, 1P, CB	SIGNALS
6	NEUTRAL BUS		18	30 A, 120 V, 1P, CB	RAMP METERING
7	GROUND BUS		19	20 A, 120 V, 1P, CB	IRRIGATION
8	GROUNDING ELECTRODE		20	15 A, 120 V, 1P, CB	LIGHTING CONTROL
9	30 A, 2P, NO CONTACTOR	SIGN ILLUMINATION	21	20 A, 120 V, 1P, CB	TELEPHONE DEMARCATION CABINET
10	PHOTOELECTRIC UNIT (NOTE 4)	PEU	22	15 A, 1P, TEST SWITCH	LIGHTING TEST SWITCH
11	15 A, 1P, TEST SWITCH	SIGN ILLUMINATION TEST SWITCH	23	60 A, 2P, NO CONTACTOR	LIGHTING
12	15 A, 120 V, 1P, CB	SIGN ILLUMINATION CONTROL			

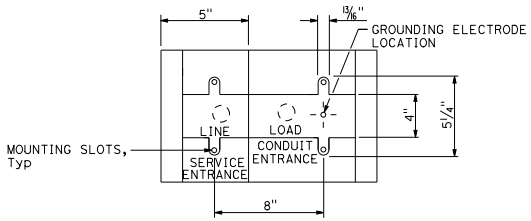

BASE FOR TYPE III-A SERVICE EQUIPMENT ENCLOSURE

DETAIL B

NOTES:

1. Unless otherwise indicated on the plans, service equipment items shall be provided for each service equipment enclosure as shown.
2. Connect to remote test switch mounted on lighting standards, sign post, or structure when required.
3. Items 1 and 6 shall be isolated from the service equipment enclosure.
4. Type V photoelectric control shall be used unless otherwise indicated on the plans.
5. Item 12 and 20 shall be ganged operated CB.
6. The plan shows the approximate location of devices within the enclosure. Components may be rearranged, however, the "working" clearances within the service equipment enclosure shall be maintained.

STATE OF CALIFORNIA
DEPARTMENT OF TRANSPORTATION

ELECTRICAL SYSTEMS (SERVICE EQUIPMENT ENCLOSURE AND TYPICAL WIRING DIAGRAM, TYPE III-A SERIES)

NO SCALE

ES-2D

7-1-26

Return to Table of Contents

Dist	COUNTY	ROUTE	POST MILES TOTAL PROJECT	SHEET No.	TOTAL SHEETS

REGISTERED ELECTRICAL ENGINEER

September 18, 2026
PLANS APPROVAL DATE

REGISTERED PROFESSIONAL ENGINEER Bhanupriya Sharma No. E23752 Exp. 12-31-27 ELECTRICAL STATE OF CALIFORNIA

THE STATE OF CALIFORNIA OR ITS OFFICERS OR AGENTS SHALL NOT BE RESPONSIBLE FOR THE ACCURACY OR COMPLETENESS OF SCANNED COPIES OF THIS PLAN SHEET.

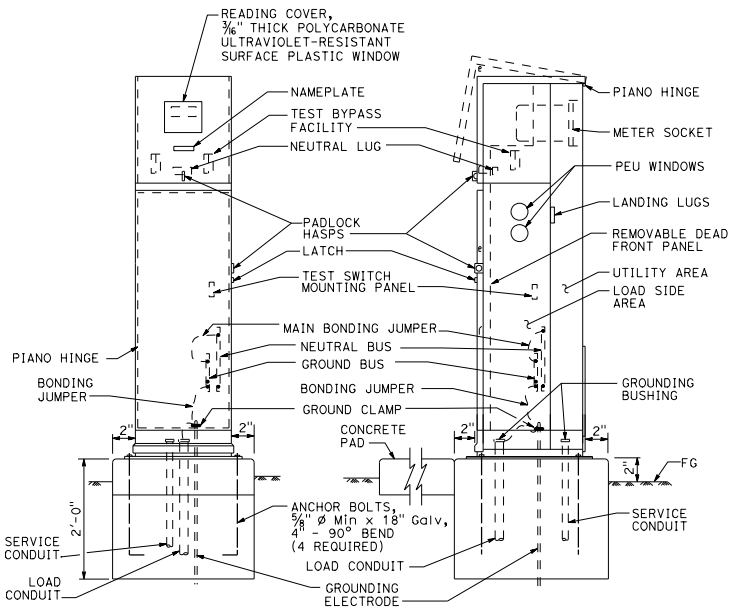

TYPE III-BF SERVICE EQUIPMENT ENCLOSURE (TYPICAL)

DETAIL A

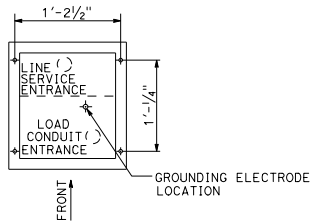

BASE FOR TYPE III-B SERVICE EQUIPMENT ENCLOSURE

DETAIL B

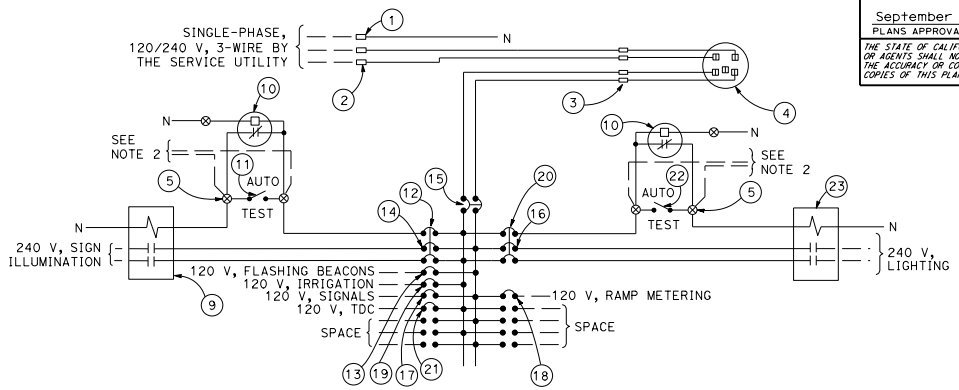

120/240 V SERVICE WIRING DIAGRAM (TYPICAL)

DETAIL C

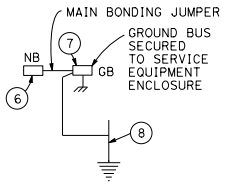

DETAIL D

TYPE III-B SERVICE EQUIPMENT ENCLOSURE LEGEND (120/240 V)					
ITEM	COMPONENT	NAMEPLATE DESCRIPTION	ITEM	COMPONENT	NAMEPLATE DESCRIPTION
1	NEUTRAL LUG		13	15 A, 120 V, 1P, CB	FLASHING BEACON
2	LANDING LUG		14	30 A, 240 V, 2P, CB	SIGN ILLUMINATION
3	TEST BYPASS FACILITY		15	100 A, 240 V, 2P, CB	MAIN BREAKER
4	METER SOCKET AND SUPPORT		16	30 A, 240 V, 2P, CB	LIGHTING
5	TERMINAL BLOCKS		17	50 A, 120 V, 1P, CB	SIGNALS
6	NEUTRAL BUS		18	30 A, 120 V, 1P, CB	RAMP METERING
7	GROUND BUS		19	20 A, 120 V, 1P, CB	IRRIGATION
8	GROUNDING ELECTRODE		20	15 A, 120 V, 1P, CB	LIGHTING CONTROL
9	30 A, 2P, NO CONTACTOR	SIGN ILLUMINATION	21	20 A, 120 V, IP, CB	TELEPHONE DEMARCATION CABINET
10	PHOTOELECTRIC UNIT (NOTE 4)	PEU	22	15 A, 1P, TEST SWITCH	LIGHTING TEST SWITCH
11	15 A, 1P, TEST SWITCH	SIGN ILLUMINATION TEST SWITCH	23	60 A, 2P, NO CONTACTOR	LIGHTING
12	15 A, 120 V, 1P, CB	SIGN ILLUMINATION CONTROL			

NOTES:

1. Unless otherwise indicated on the plans, service equipment items shall be provided for each service equipment enclosure as shown.
2. Connect to remote test switch mounted on lighting standards, sign post, or structure when required.
3. Items 1 and 6 shall be isolated from the service equipment enclosure.
4. Type V photoelectric control shall be used unless otherwise indicated on the plans.
5. Item 12 and 20 shall be ganged operated CB.
6. The plan shows the approximate location of devices within the enclosure. Components may be rearranged, however, the "working" clearances within the service equipment enclosure shall be maintained.

STATE OF CALIFORNIA
DEPARTMENT OF TRANSPORTATION

ELECTRICAL SYSTEMS (SERVICE EQUIPMENT ENCLOSURE AND TYPICAL WIRING DIAGRAM, TYPE III-B SERIES)

NO SCALE

ES-2E

2026 STANDARD PLAN ES-2E

7-1-26

Return to Table of Contents

Dist	COUNTY	ROUTE	POST MILES TOTAL PROJECT	SHEET No.	TOTAL SHEETS

REGISTERED ELECTRICAL ENGINEER

September 18, 2026
PLANS APPROVAL DATE

REGISTERED PROFESSIONAL ENGINEER Bhanupriya Sharma No. E23752 Exp. 12-31-27 ELECTRICAL STATE OF CALIFORNIA

THE STATE OF CALIFORNIA OR ITS OFFICERS OR AGENTS SHALL NOT BE RESPONSIBLE FOR THE ACCURACY OR COMPLETENESS OF SCANNED COPIES OF THIS PLAN SHEET.

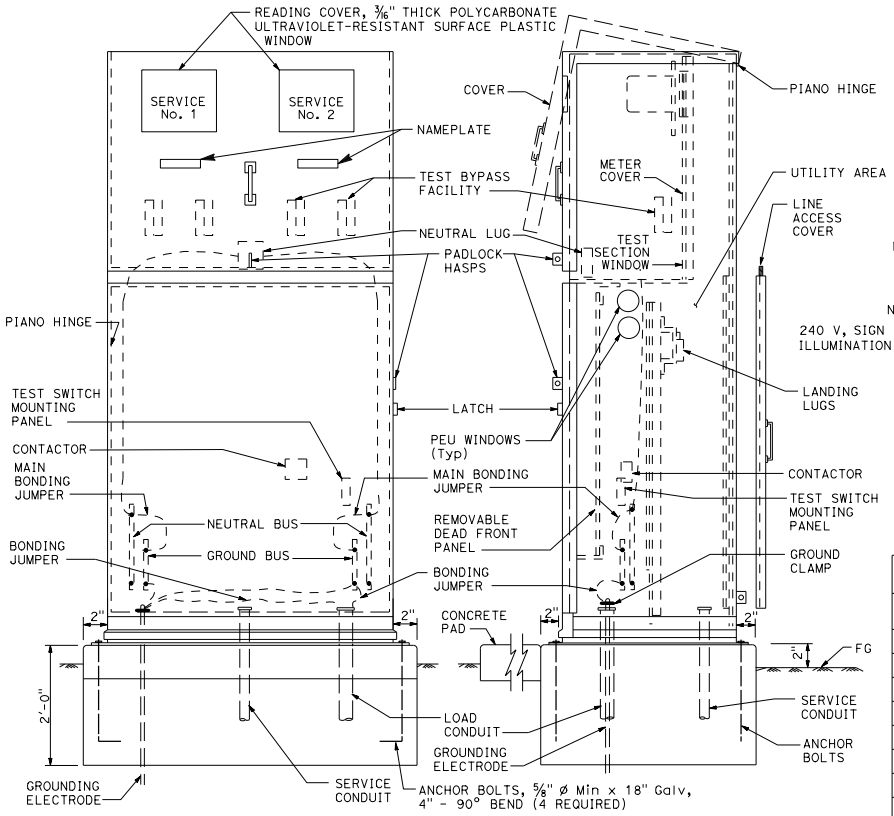

FRONT VIEW

SIDE VIEW

TYPE III-CF SERVICE EQUIPMENT ENCLOSURE (TYPICAL)

DETAIL A

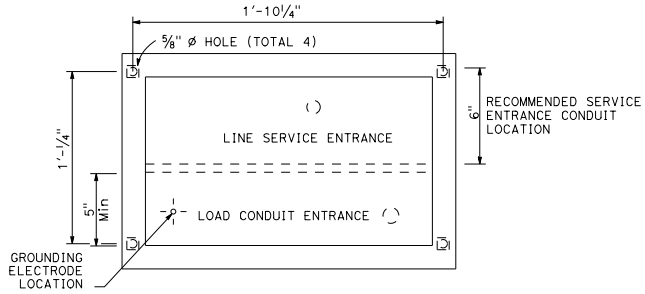

BASE FOR TYPE III-C SERVICE EQUIPMENT ENCLOSURE

DETAIL B

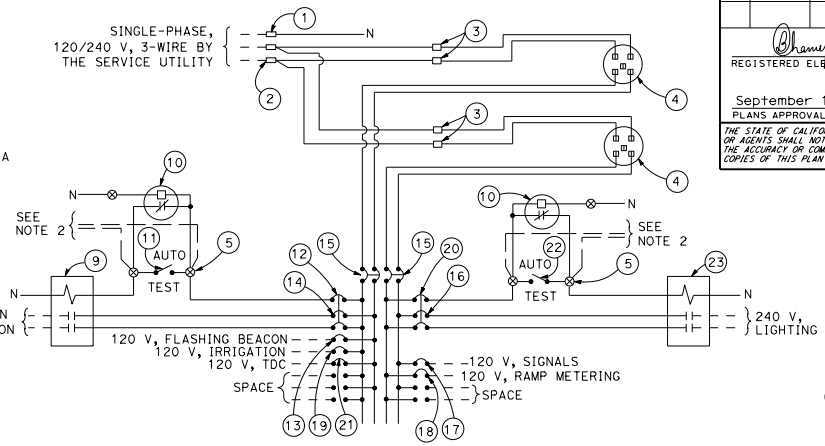

120/240 V SERVICE WIRING DIAGRAM (TYPICAL)

DETAIL C

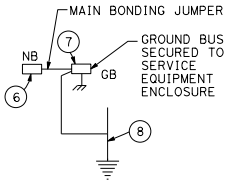

DETAIL D

TYPE III-C SERVICE EQUIPMENT ENCLOSURE LEGEND (120/240 V)

ITEM	COMPONENT	NAMEPLATE DESCRIPTION	ITEM	COMPONENT	NAMEPLATE DESCRIPTION
1	NEUTRAL LUG		13	15 A, 120 V, 1P, CB	FLASHING BEACON
2	LANDING LUG		14	30 A, 240 V, 2P, CB	SIGN ILLUMINATION
3	TEST BYPASS FACILITY		15	100 A, 240 V, 2P, CB	MAIN BREAKER
4	METER SOCKET AND SUPPORT		16	30 A, 240 V, 2P, CB	LIGHTING
5	TERMINAL BLOCKS		17	50 A, 120 V, 1P, CB	SIGNALS
6	NEUTRAL BUS		18	30 A, 120 V, 1P, CB	RAMP METERING
7	GROUND BUS		19	20 A, 120 V, 1P, CB	IRRIGATION
8	GROUNDING ELECTRODE		20	15 A, 120 V, 1P, CB	LIGHTING CONTROL
9	30 A, 2P, NO CONTACTOR	SIGN ILLUMINATION	21	20 A, 120 V, 1P, CB	TELEPHONE DEMARCATION CABINET
10	PHOTOELECTRIC UNIT (NOTE 4)	PEU	22	15 A, 1P, TEST SWITCH	LIGHTING TEST SWITCH
11	15 A, 1P, TEST SWITCH	SIGN ILLUMINATION TEST SWITCH	23	60 A, 2P, NO CONTACTOR	LIGHTING
12	15 A, 120 V, 1P, CB	SIGN ILLUMINATION CONTROL			

NOTES:

1. Unless otherwise indicated on the plans, service equipment items shall be provided for each service equipment enclosure as shown.
2. Connect to remote test switch mounted on lighting standards, sign post, or structure when required.
3. Items 1 and 6 shall be isolated from the service equipment enclosure.
4. Type V photoelectric control shall be used unless otherwise indicated on the plans.
5. Item 12 and 20 shall be ganged operated CB.
6. The plan shows the approximate location of devices within the enclosure. Components may be rearranged, however, the "working" clearances within the service equipment enclosure shall be maintained.

STATE OF CALIFORNIA
DEPARTMENT OF TRANSPORTATION

ELECTRICAL SYSTEMS (SERVICE EQUIPMENT ENCLOSURE AND TYPICAL WIRING DIAGRAM, TYPE III-C SERIES)

NO SCALE

ES-2F

7-1-26

Return to Table of Contents

Dist	COUNTY	ROUTE	POST MILES TOTAL PROJECT	SHEET No.	TOTAL SHEETS

REGISTERED ELECTRICAL ENGINEER

September 18, 2026

PLANS APPROVAL DATE

Bhanupriya Sharma No. E23752 Exp. 12-31-27 ELECTRICAL — REGISTERED PROFESSIONAL ENGINEER — STATE OF CALIFORNIA

THE STATE OF CALIFORNIA OR ITS OFFICERS OR AGENTS SHALL NOT BE RESPONSIBLE FOR THE ACCURACY OR COMPLETENESS OF SCANNED COPIES OF THIS PLAN SHEET.

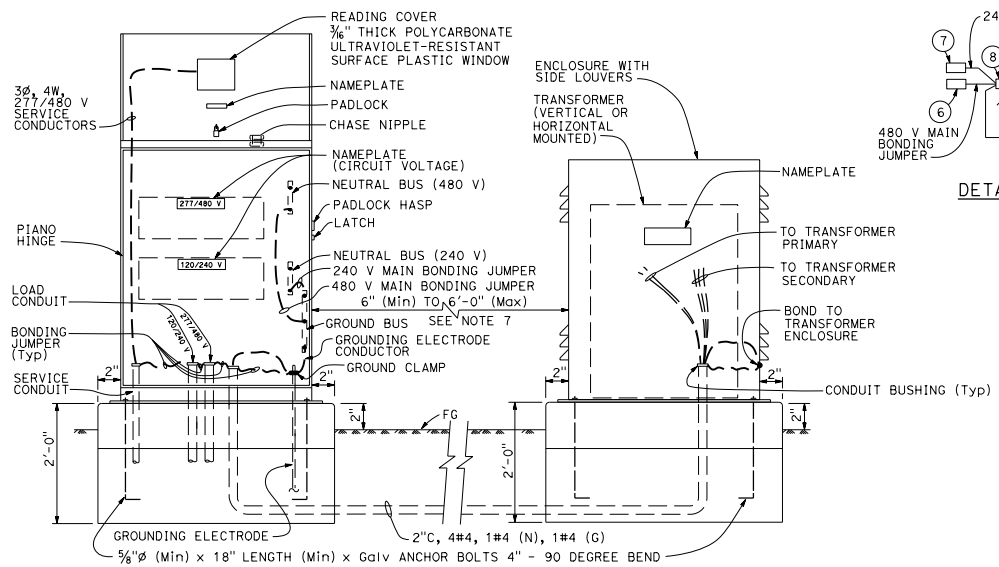

SIDE INSTALLATION OF TRANSFORMER

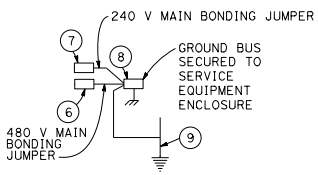

DETAIL B

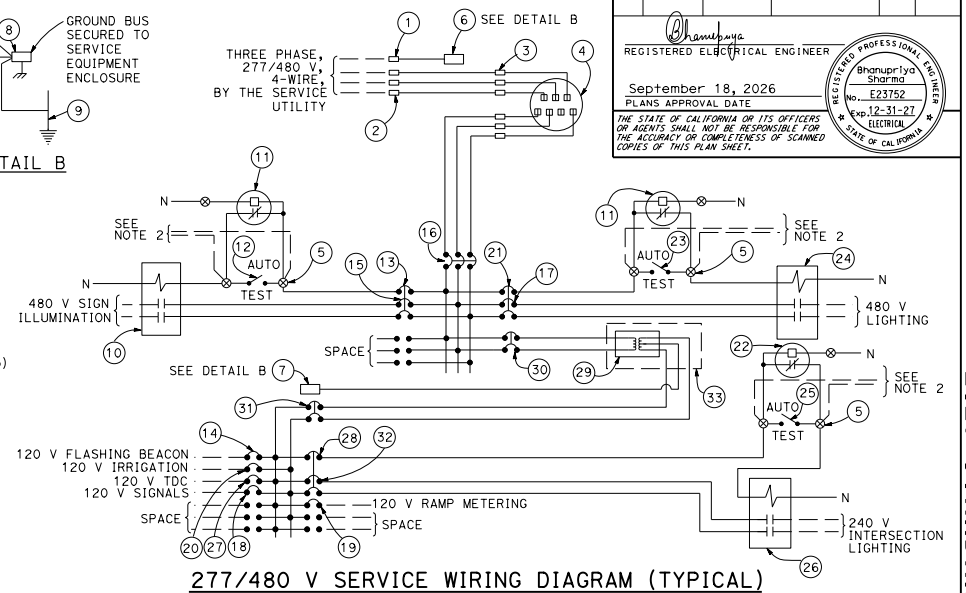

277/480 V SERVICE WIRING DIAGRAM (TYPICAL)

DETAIL C

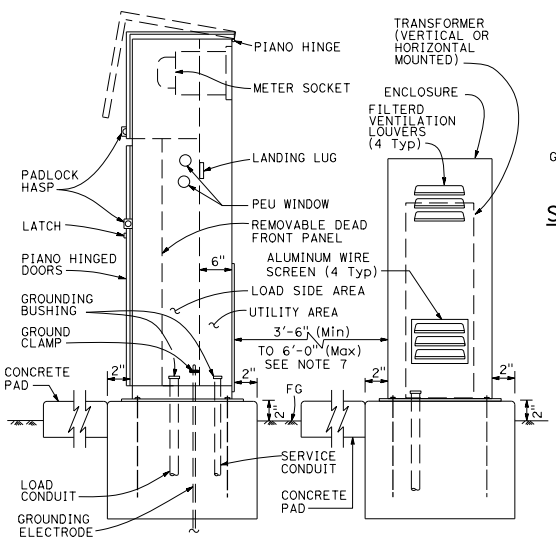

REAR INSTALLATION OF TRANSFORMER

TYPE III-DF SERVICE EQUIPMENT ENCLOSURE TYPICAL

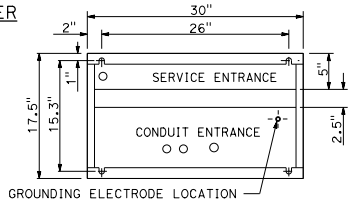

BASE FOR TYPE III-D SERVICE EQUIPMENT ENCLOSURE

DETAIL A

NOTES:

1. Unless otherwise indicated on the plans, service equipment items shall be provided for each service equipment enclosure as shown.
2. Connect to remote test switch mounted on lighting standards, sign post, or structure when required.
3. Items No. 1, 6, and 7 shall be isolated from the service equipment enclosure.
4. Type V photoelectric control shall be used unless otherwise indicated on the plans.
5. Color of insulation of the neutral shall be gray for the 277/480 V system and shall be white for the 120/240 V system.
6. Items 13, 21, and 28 shall be ganged operated CB.
7. The enclosure shall be located to the side of the service equipment enclosure unless otherwise indicated on the plans.

TYPE III-D SERVICE (277/480 V) EQUIPMENT LEGEND

ITEM	COMPONENT	NAMEPLATE DESCRIPTION	ITEM	COMPONENT	NAMEPLATE DESCRIPTION
1	NEUTRAL LUG		18	50 A, 120 V, 1P, CB	SIGNAL (120 V)
2	LANDING LUG		19	30 A, 120 V, 1P, CB	RAMP METERING (120 V)
3	TEST BYPASS FACILITY		20	20 A, 120 V, 1P, CB	IRRIGATION (120 V)
4	METER SOCKET AND SUPPORT		21	10 A, 277 V, 1P, CB	LIGHTING CONTROL (277 V)
5	TERMINAL BLOCKS		22	PHOTOELECTRIC UNIT (NOTE 4)	PEU (120/240 V)
6	NEUTRAL BUS	NEUTRAL BUS (480 V)	23	15 A, 1P, TEST SWITCH	LIGHTING TEST SWITCH (277 V)
7	NEUTRAL BUS	NEUTRAL BUS (240 V)	24	30 A, 2P, NO CONTACTOR	LIGHTING (480 V)
8	GROUND BUS		25	15 A, 1P, TEST SWITCH	INTERSECTION LIGHTING TEST SWITCH (120 V)
9	GROUNDING ELECTRODE		26	30 A, 2P, NO CONTACTOR	INTERSECTION LIGHTING (120 V)
10	30 A, 2P, NO CONTACTOR	SIGN ILLUMINATION (480 V)	27	20 A, 120 V, 1P, CB	TELEPHONE DEMARCATION CABINET (120 V)
11	PHOTOELECTRIC UNIT (NOTE 4)	PEU (277/480 V PEU)	28	10 A, 120 V, 1P, CB	INTERSECTION LIGHTING CONTROL (120 V)
12	15 A, 1P, TEST SWITCH	SIGN ILLUMINATION TEST SWITCH (277 V)	29	15 kVA, 480-120/240 V TRANSFORMER	TRANSFORMER, 15 kVA, 480-240 V
13	10 A, 277 V, 1P, CB	SIGN ILLUMINATION CONTROL (277 V)	30	40 A, 480 V, 2P, CB	TRANSFORMER PRIMARY (480 V)
14	15 A, 120 V, 1P, CB	FLASHING BEACON (120 V)	31	80 A, 240 V, 2P, CB	TRANSFORMER SECONDARY (240 V)
15	15 A, 480 V, 2P, CB	SIGN ILLUMINATION (480 V)	32	30 A, 240 V, 2P, CB	INTERSECTION LIGHTING (240 V)
16	100 A, 480 V, 3P, CB	MAIN BREAKER (480 V)	33	ENCLOSURE	TRANSFORMER, 15 kVA, 480-240 V
17	15 A, 480 V, 2P, CB	LIGHTING (480 V)			

STATE OF CALIFORNIA
DEPARTMENT OF TRANSPORTATION

ELECTRICAL SYSTEMS (SERVICE EQUIPMENT ENCLOSURE AND TYPICAL WIRING DIAGRAM, TYPE III-D SERIES)

NO SCALE

ES-2G

7-1-26

Return to Table of Contents

Dist	COUNTY	ROUTE	POST MILES TOTAL PROJECT	SHEET No.	TOTAL SHEETS

REGISTERED ELECTRICAL ENGINEER

September 18, 2026
PLANS APPROVAL DATE

REGISTERED PROFESSIONAL ENGINEER
Bhanupriya Sharma
No. E23752
Exp. 12-31-27
ELECTRICAL
STATE OF CALIFORNIA

THE STATE OF CALIFORNIA OR ITS OFFICERS OR AGENTS SHALL NOT BE RESPONSIBLE FOR THE ACCURACY OR COMPLETENESS OF SCANNED COPIES OF THIS PLAN SHEET.

NOTES:

1. Cabinet shall be installed with the back toward the nearest lane of traffic.
2. In unpaved areas, a raised portland cement concrete pad shall be constructed in front of each controller cabinet. The pad shall be 3'-0" x 4" thick x width of foundation.
3. A 1" drain shall be provided through the foundation of a cabinet. Drain pipe shall be screened.
4. Cabinet shelves shall be adjustable for vertical spacing and shall be removable.
5. Controller units, plug-mounted equipment, shelf-mounted equipment and wall-mounted equipment shall be located to permit safe and easy removal or replacement without removing any other piece of equipment.
6. Where telephone interconnect is required, a minimum of 5" clear vertical space shall be provided inside the cabinet for the equipment.
7. Telephone interconnect conductors shall be enclosed in a ¾"C or larger conduit through the foundation. Type 4 conduit shall be used to separate telephone and power conductors in cabinets or pedestals.
8. Anchor bolts for cabinet shall be ¾" ø x 1'-6" with a 2" - 90° bend.

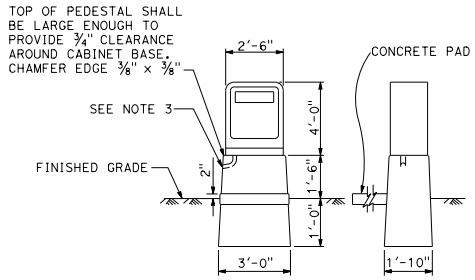

FRONT VIEW SIDE VIEW

PEDESTAL FOUNDATION
FOR MODEL 336LS CABINET

DETAIL A

STATE OF CALIFORNIA
DEPARTMENT OF TRANSPORTATION

ELECTRICAL SYSTEMS (CONTROLLER CABINET ADAPTER, FOUNDATIONS, AND PAD DETAILS)

NO SCALE

ES-3B

2026 STANDARD PLAN ES-3B

7-1-26

Return to Table of Contents

Dist	COUNTY	ROUTE	POST MILES TOTAL PROJECT	SHEET No.	TOTAL SHEETS

REGISTERED ELECTRICAL ENGINEER

September 18, 2026
PLANS APPROVAL DATE

REGISTERED PROFESSIONAL ENGINEER Bhanupriya Sharma No. E23752 Exp. 12-31-27 ELECTRICAL STATE OF CALIFORNIA

THE STATE OF CALIFORNIA OR ITS OFFICERS OR AGENTS SHALL NOT BE RESPONSIBLE FOR THE ACCURACY OR COMPLETENESS OF SCANNED COPIES OF THIS PLAN SHEET.

NOTES:

1. Where telephone interconnect is required, a minimum of 5" clear vertical space shall be provided inside the cabinet for the equipment.
2. Telephone interconnect conductors shall be enclosed in a ¾"C or larger conduit through the foundation. Type 4 conduit shall be used to separate telephone and power conductors in cabinets.

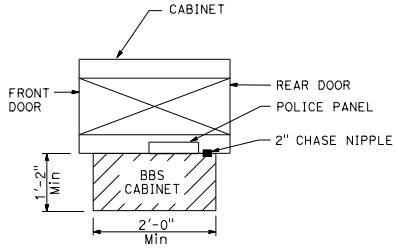

TOP VIEW

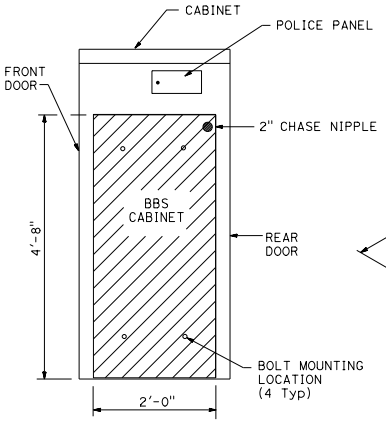

SIDE VIEW

LX-BBS CABINET MOUNTED TO THE MODEL 332LS CABINET

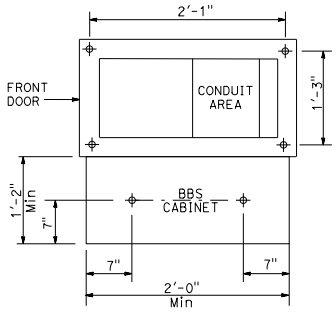

BASE PLAN FOR LX-BBS CABINET MOUNTED TO THE MODEL 332LS CABINET

(FOR DIMENSIONS AND DETAILS NOT SHOWN, SEE CABINET HOUSING DETAILS OF THE TRANSPORTATION ELECTRICAL EQUIPMENT SPECIFICATION (TEES))

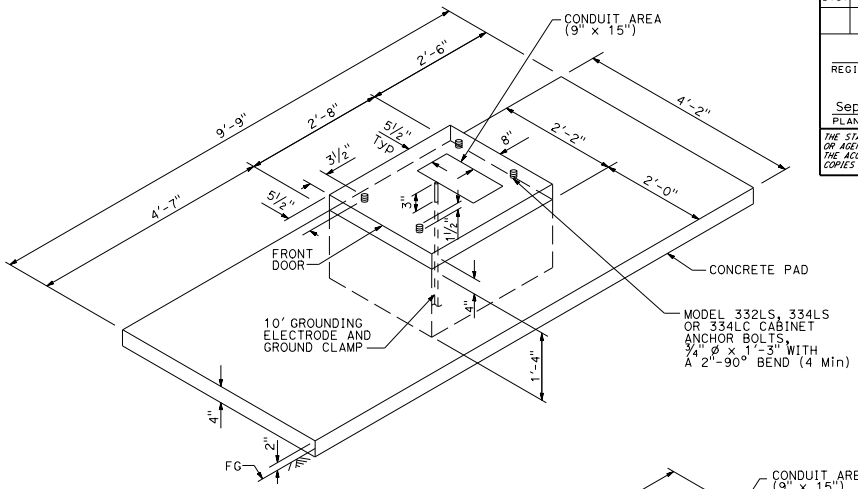

FOUNDATION AND PAD DETAIL

Model 332LS, 334LS, and 334LC

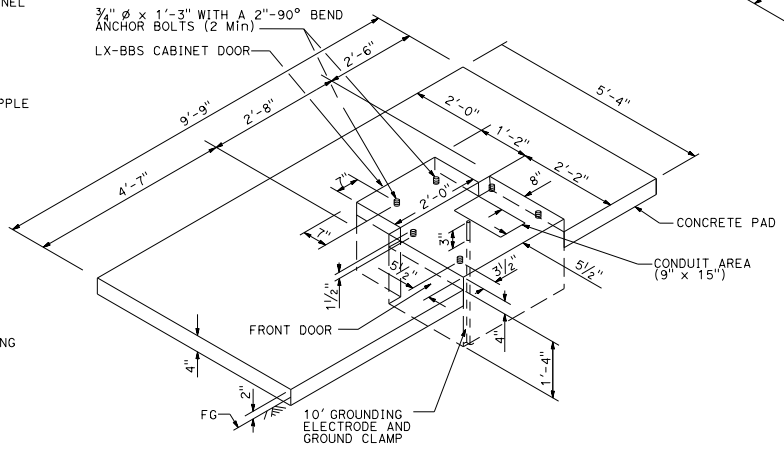

LEFT SIDE INSTALLATION

DETAIL A

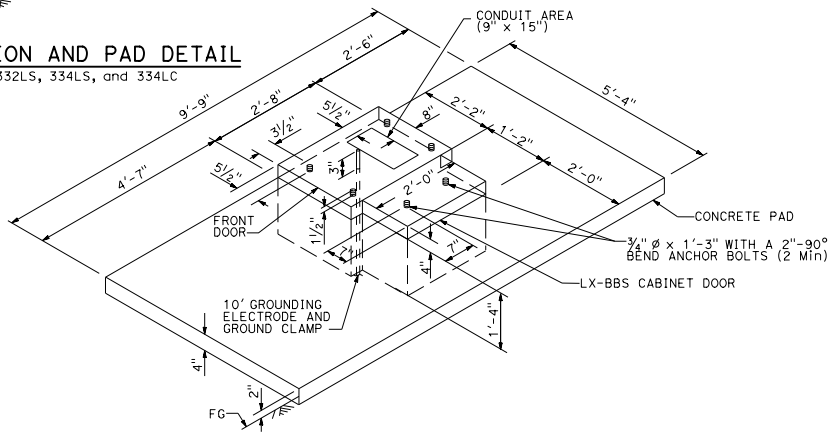

RIGHT SIDE INSTALLATION

DETAIL B

MODEL 332LS CABINET

FOUNDATION DETAIL WITH LX-BATTERY BACKUP SYSTEM

STATE OF CALIFORNIA
DEPARTMENT OF TRANSPORTATION

ELECTRICAL SYSTEMS (CONTROLLER CABINET FOUNDATION AND PAD DETAILS)

NO SCALE

ES-3C

7-1-26

Return to Table of Contents

Dist	COUNTY	ROUTE	POST MILES TOTAL PROJECT	SHEET No.	TOTAL SHEETS

REGISTERED ELECTRICAL ENGINEER

September 18, 2026
PLANS APPROVAL DATE

REGISTERED PROFESSIONAL ENGINEER Bhanupriya Sharma No. E23752 Exp. 12-31-27 ELECTRICAL STATE OF CALIFORNIA

THE STATE OF CALIFORNIA OR ITS OFFICERS OR AGENTS SHALL NOT BE RESPONSIBLE FOR THE ACCURACY OR COMPLETENESS OF SCANNED COPIES OF THIS PLAN SHEET.

NOTES:

1. Where telephone interconnect is required, a minimum of 5" clear vertical space shall be provided inside the cabinet for the equipment.
2. Telephone interconnect conductors shall be enclosed in a ¾"C or larger conduit through the foundation. Type 4 conduit shall be used to separate telephone and power conductors in cabinets.
3. Dimensions are nominal.
4. For Model 342LX, 344LX, and 346LX cabinets details, see "Transportation Electrical Equipment Specifications".
5. Grounding electrode shall be placed 3 inches in front of the service conduit area.
6. Conduit area, to 120 V Service.
7. Conduit area for the controller side of cabinet.

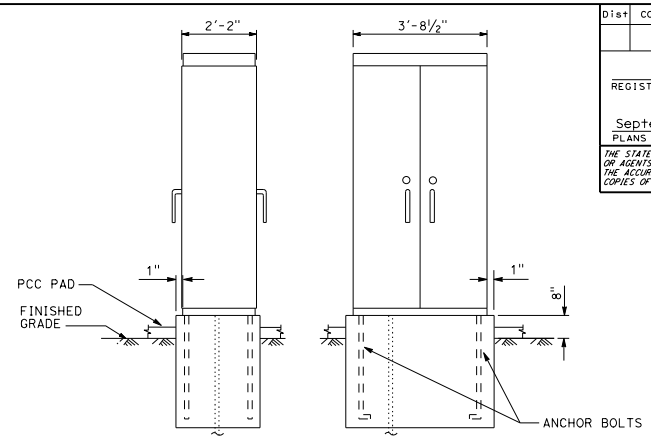

SIDE VIEW FRONT VIEW

FOUNDATION FOR TYPE LX CABINET
DETAIL A

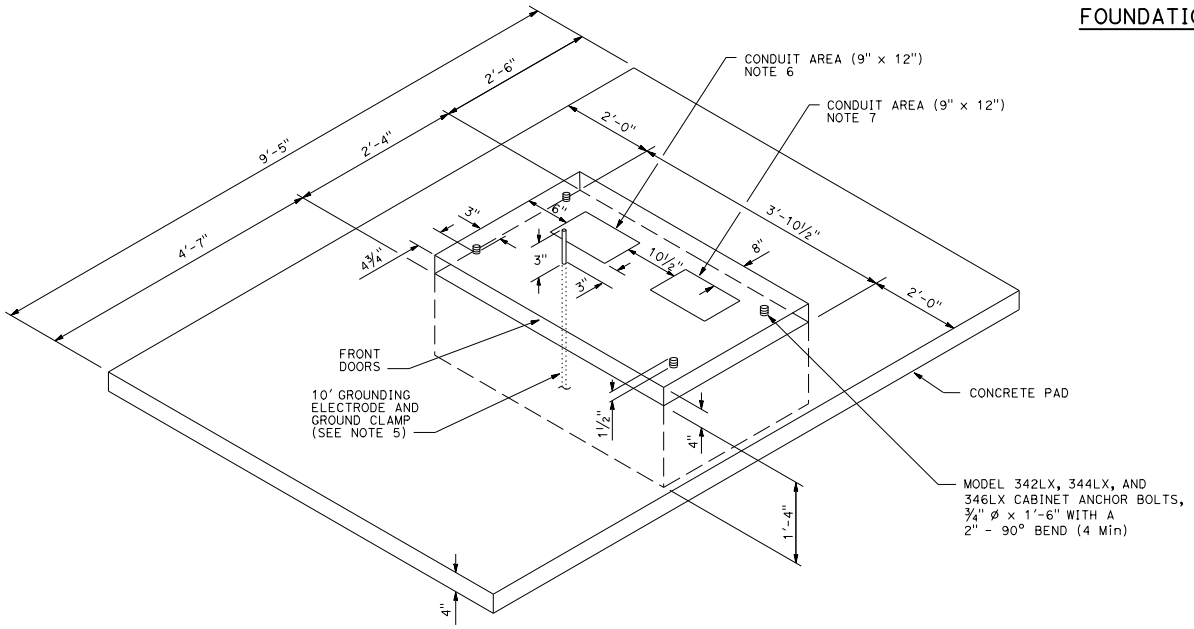

FOUNDATION AND PAD DETAIL
Model 342LX, 344LX, and 346LX
DETAIL B

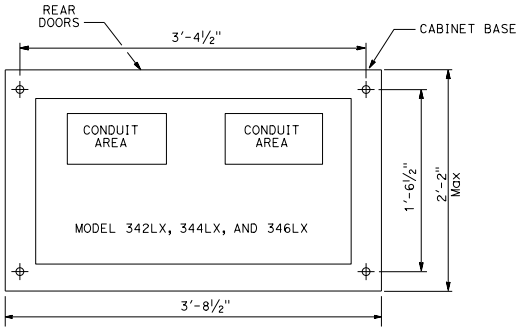

BASE PLAN FOR THE MODEL
342LX, 344LX, AND 346LX CABINET

STATE OF CALIFORNIA
DEPARTMENT OF TRANSPORTATION

ELECTRICAL SYSTEMS (CONTROLLER CABINET FOUNDATION AND PAD DETAILS)

NO SCALE

ES-3C1

2026 STANDARD PLAN ES-3C1

7-1-26

Return to Table of Contents

Dist	COUNTY	ROUTE	POST MILES TOTAL PROJECT	SHEET No.	TOTAL SHEETS

REGISTERED ELECTRICAL ENGINEER

September 18, 2026

PLANS APPROVAL DATE

REGISTERED PROFESSIONAL ENGINEER Bhanupriya Sharma No. E23752 Exp. 12-31-27 ELECTRICAL STATE OF CALIFORNIA

THE STATE OF CALIFORNIA OR ITS OFFICERS OR AGENTS SHALL NOT BE RESPONSIBLE FOR THE ACCURACY OR COMPLETENESS OF SCANNED COPIES OF THIS PLAN SHEET.

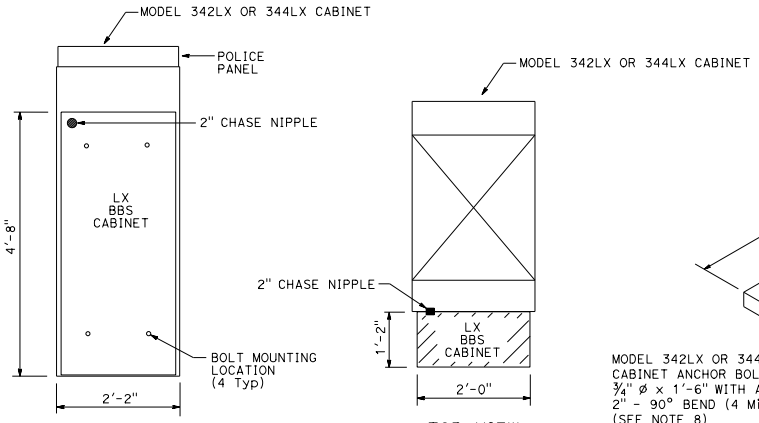

LX BBS CABINET MOUNTED TO THE MODEL 342LX OR 344LX CABINETS

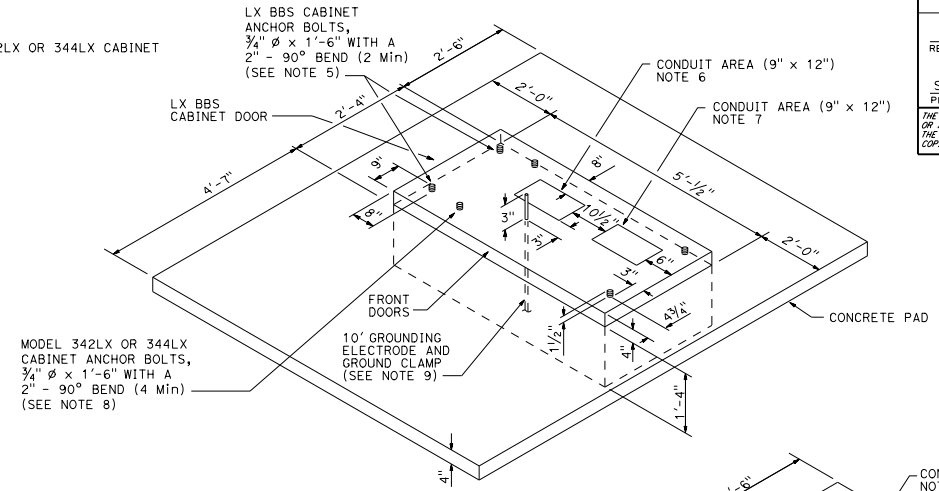

LEFT-HAND INSTALLATION DETAIL A

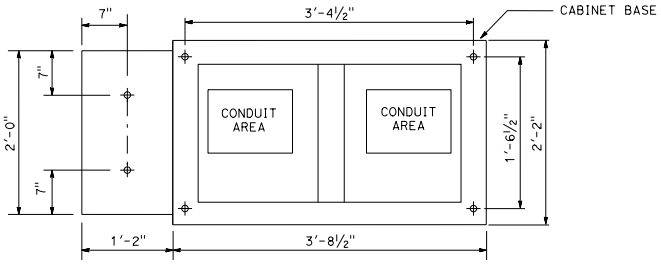

BASE PLAN FOR MODEL 342LX OR 344LX CABINETS

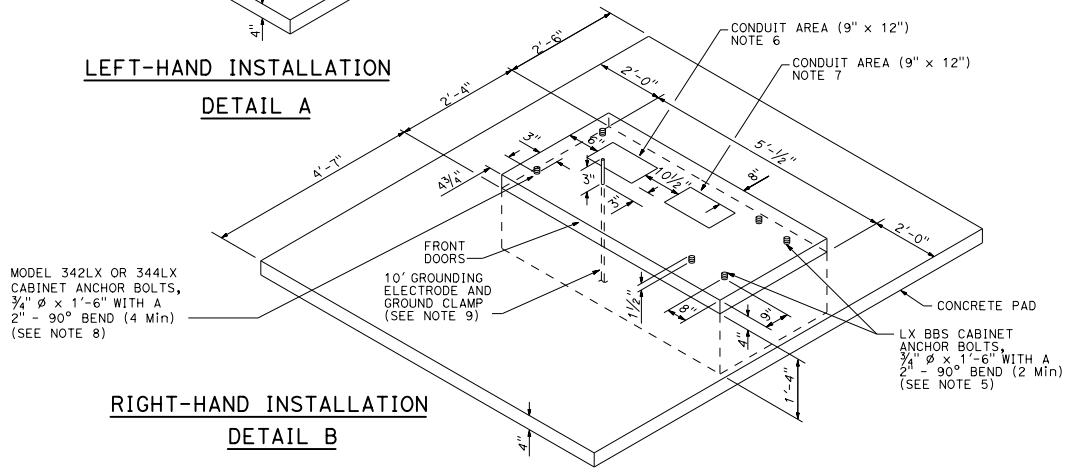

RIGHT-HAND INSTALLATION DETAIL B

NOTES:

1. Where telephone interconnect is required, a minimum of 5" clear vertical space shall be provided inside the cabinet for the equipment.
2. Telephone interconnect conductors shall be enclosed in a ¾"C or larger conduit through the foundation. Type 4 conduit shall be used to separate telephone and power conductors in cabinets.
3. The LX BBS cabinet shall be mounted to the Model 342LX or 344LX cabinet with four 18-8 stainless steel hex head, fully-threaded, ⅝"-16 x 1" bolts; two washers per bolt, designed for ⅜" bolts and are 18-8 stainless steel, 1" outside diameter, round, and flat; and one K-Lock nut per bolt that is 18-8 stainless steel and a hex-nut.
4. All dimensions are nominal.
5. The dimensions of the BBS cabinet shall be verified prior to constructing the foundation of the Model 342LX or 344LX cabinet foundation.
6. Conduit area, to 120 V Service.
7. Conduit area for the controller side of cabinet.
8. For Type LX cabinets details, see "Transportation Electrical Equipment Specifications".
9. Grounding electrode shall be placed 3 inches in front of the service conduit area.

MODEL 342LX OR 344LX CABINET FOUNDATION DETAIL WITH BATTERY BACKUP SYSTEM

STATE OF CALIFORNIA
DEPARTMENT OF TRANSPORTATION

ELECTRICAL SYSTEMS (CONTROLLER CABINET FOUNDATION DETAILS)

NO SCALE

ES-3C2

7-1-26

2026 STANDARD PLAN ES-3C2

Return to Table of Contents

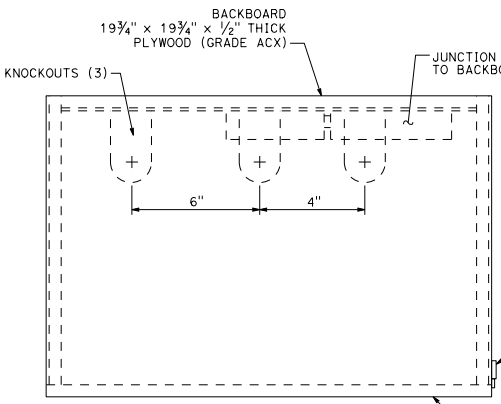

TOP
DETAIL C

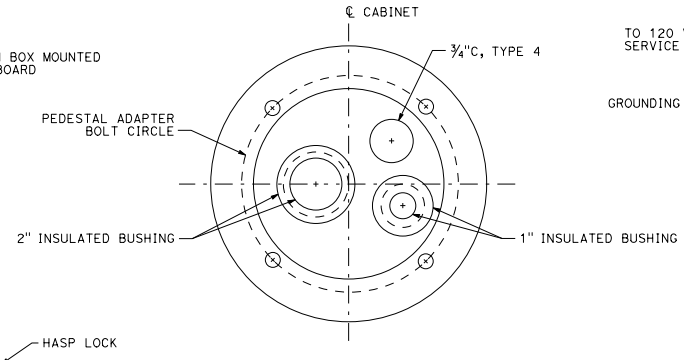

SECTION A-A

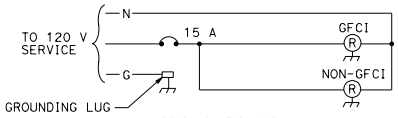

WIRING DIAGRAM
DETAIL D

Dist	COUNTY	ROUTE	POST MILES TOTAL PROJECT	SHEET No.	TOTAL SHEETS

REGISTERED ELECTRICAL ENGINEER

September 18, 2026
PLANS APPROVAL DATE

REGISTERED PROFESSIONAL ENGINEER
Bhanupriya Sharma
No. E23752
Exp. 12-31-27
ELECTRICAL
STATE OF CALIFORNIA

THE STATE OF CALIFORNIA OR ITS OFFICERS OR AGENTS SHALL NOT BE RESPONSIBLE FOR THE ACCURACY OR COMPLETENESS OF SCANNED COPIES OF THIS PLAN SHEET.

NOTES:

1. Dimensions are nominal.
2. The steel pedestal, base plate, and bolt circle for the telephone demarcation cabinet shall be the same as that shown for a Type 1-C Standard. The steel pedestal shall be 2'-1" to 2'-6" in length. Anchor bolts shall be ¾" ø x 1'-6" with a 2" - 90° bend. Four bolts required per cabinet.
3. Telephone interconnect conductors shall be enclosed in a ¾"C or larger conduit through the foundation. Type 4 conduit shall be used to separate telephone and power conductors in the cabinet and pedestal.
4. Mount cabinet on Type G cabinet pedestal and foundation, see Standard Plan ES-3B.

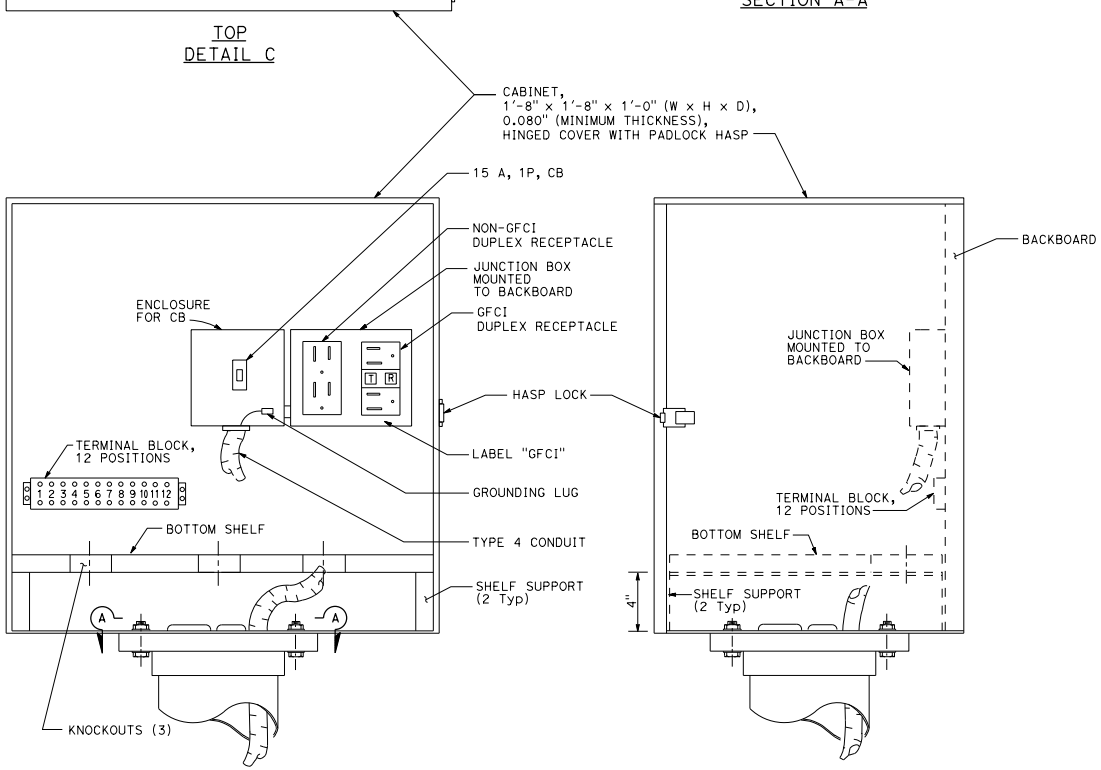

FRONT
DETAIL A

RIGHT SIDE
DETAIL B

FASTENER SCHEDULE

BACKBOARD	4 - ¾" (LENGTH) WOOD SCREWS
2 SHELF SUPPORTS	4 - ¾" (LENGTH) WOOD SCREWS
JUNCTION BOX	4 - ½" (LENGTH) WOOD SCREWS
TERMINAL BLOCK	4 - ¾" (LENGTH) WOOD SCREWS

STATE OF CALIFORNIA
DEPARTMENT OF TRANSPORTATION

ELECTRICAL SYSTEMS (TELEPHONE DEMARCATION CABINET, TYPE A)

NO SCALE

ES-3D

7-1-26

Return to Table of Contents

Dist	COUNTY	ROUTE	POST MILES TOTAL PROJECT	SHEET No.	TOTAL SHEETS

REGISTERED ELECTRICAL ENGINEER

September 18, 2026
PLANS APPROVAL DATE

REGISTERED PROFESSIONAL ENGINEER Bhanupriya Sharma No. E23752 Exp. 12-31-27 ELECTRICAL STATE OF CALIFORNIA

THE STATE OF CALIFORNIA OR ITS OFFICERS OR AGENTS SHALL NOT BE RESPONSIBLE FOR THE ACCURACY OR COMPLETENESS OF SCANNED COPIES OF THIS PLAN SHEET.

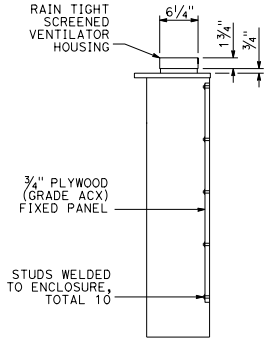

SECTION A-A

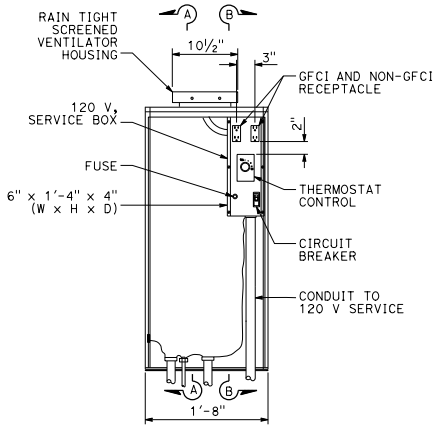

FRONT VIEW

INTERIOR DETAIL A

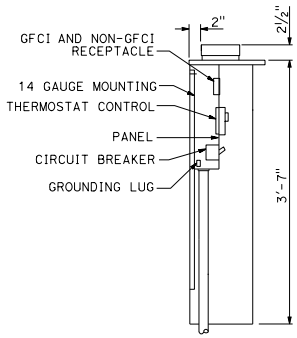

SECTION B-B

NOTE:

1. Dimensions are nominal.

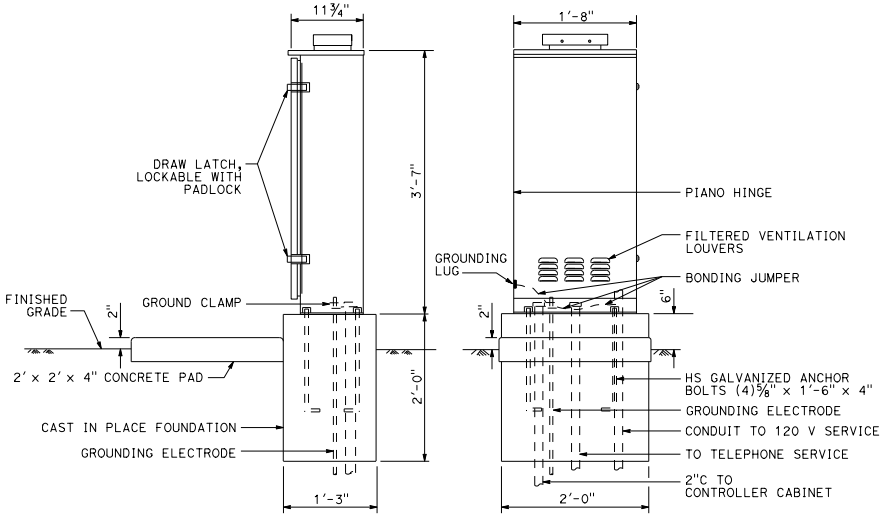

SIDE VIEW FRONT VIEW

EXTERIOR DETAIL B

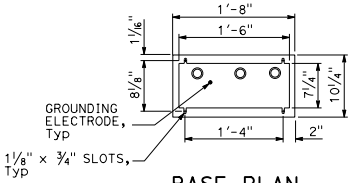

BASE PLAN

DETAIL C

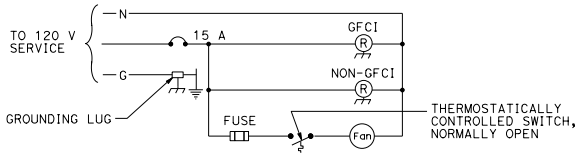

WIRING DIAGRAM

DETAIL D

STATE OF CALIFORNIA
DEPARTMENT OF TRANSPORTATION

ELECTRICAL SYSTEMS (TELEPHONE DEMARCATION CABINET, TYPE B)

NO SCALE

ES-3E

2026 STANDARD PLAN ES-3E

7-1-26

Return to Table of Contents

Dist	COUNTY	ROUTE	POST MILES TOTAL PROJECT	SHEET No.	TOTAL SHEETS

REGISTERED ELECTRICAL ENGINEER

September 18, 2026
PLANS APPROVAL DATE

Bhanupriya Sharma
No. E23752
Exp. 12-31-27
ELECTRICAL
REGISTERED PROFESSIONAL ENGINEER
STATE OF CALIFORNIA

THE STATE OF CALIFORNIA OR ITS OFFICERS OR AGENTS SHALL NOT BE RESPONSIBLE FOR THE ACCURACY OR COMPLETENESS OF SCANNED COPIES OF THIS PLAN SHEET.

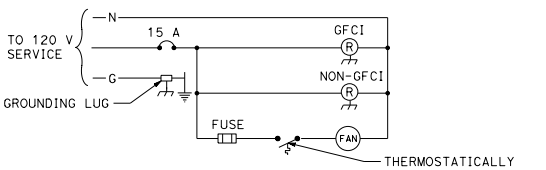

WIRING DIAGRAM
DETAIL F

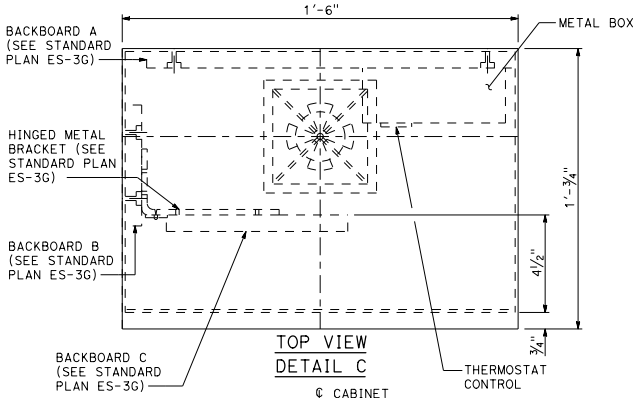

TOP VIEW
DETAIL C

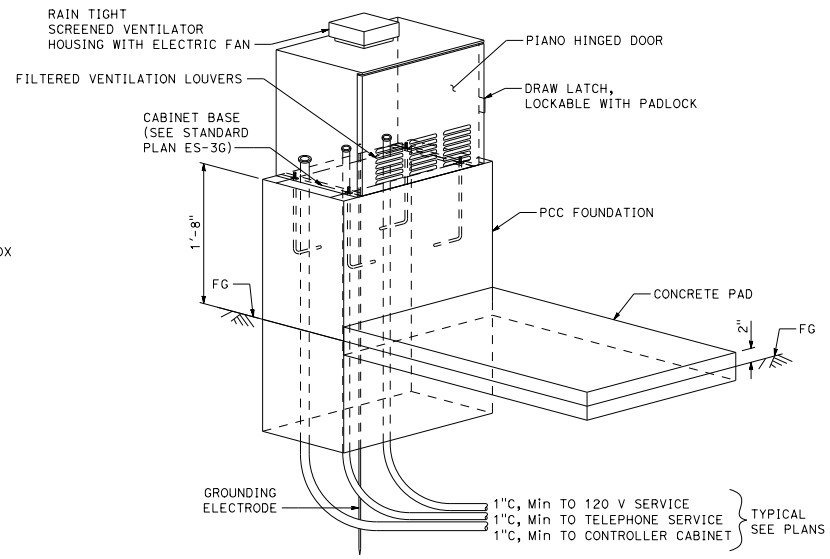

DETAIL D

NOTES:

1. Dimensions are nominal.
2. Hardware for fastening of mounting boards:
   a. Fasten backboard A and backboard B to telephone demarcation cabinet with 3/16" ø x 3/4" stainless steel carriage bolts (8 required).
   b. Fasten hinged metal bracket to backboard B and backboard C to hinged metal bracket with No. 10 x 3/4" wood screws (9 required).

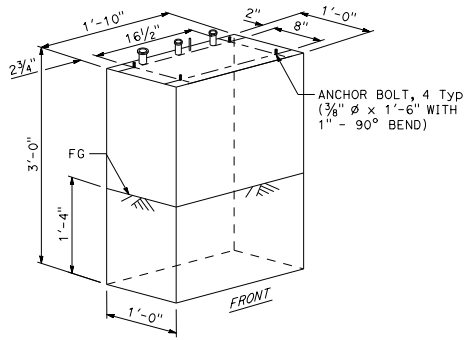

FOUNDATION

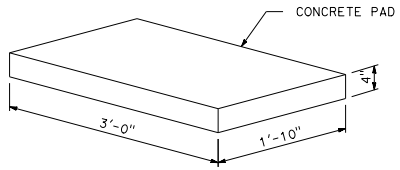

CONCRETE PAD

FOUNDATION AND PAD DETAILS
DETAIL E

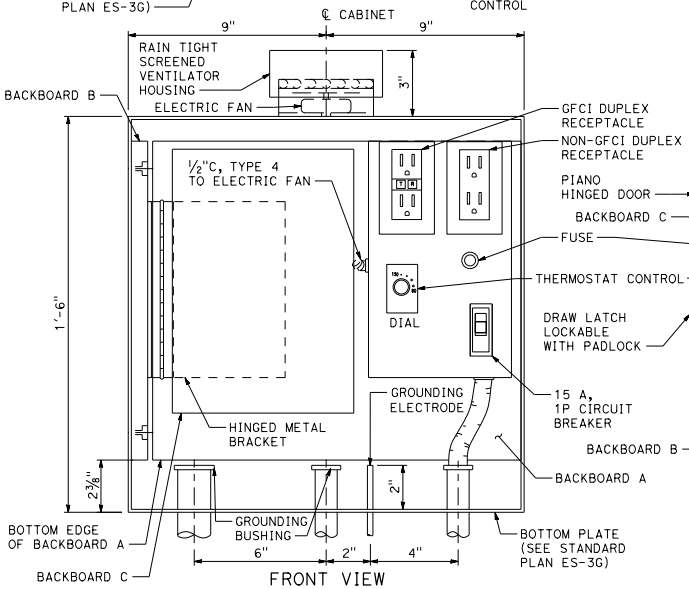

FRONT VIEW
DETAIL A
Outer door removed for clarity

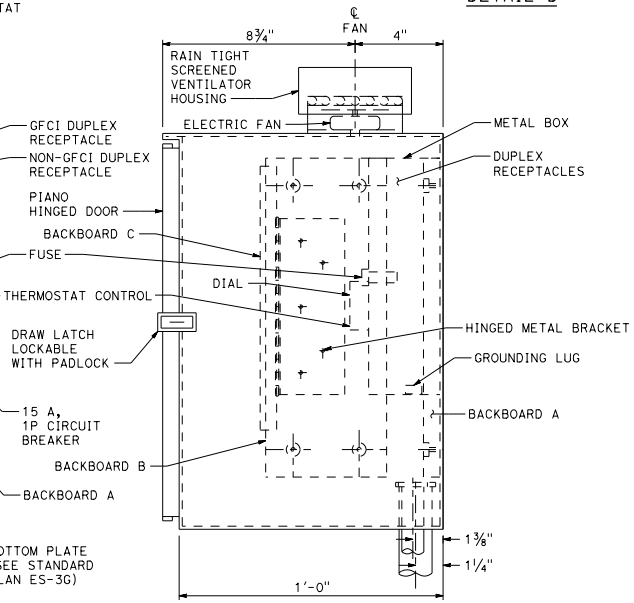

SIDE VIEW
DETAIL B

STATE OF CALIFORNIA
DEPARTMENT OF TRANSPORTATION

ELECTRICAL SYSTEMS (TELEPHONE DEMARCATION CABINET, TYPE C)

NO SCALE

ES-3F

7-1-26

Return to Table of Contents

Dist	COUNTY	ROUTE	POST MILES TOTAL PROJECT	SHEET No.	TOTAL SHEETS

REGISTERED ELECTRICAL ENGINEER

September 18, 2026

PLANS APPROVAL DATE

REGISTERED PROFESSIONAL ENGINEER Bhanupriya Sharma No. E23752 Exp. 12-31-27 ELECTRICAL STATE OF CALIFORNIA

THE STATE OF CALIFORNIA OR ITS OFFICERS OR AGENTS SHALL NOT BE RESPONSIBLE FOR THE ACCURACY OR COMPLETENESS OF SCANNED COPIES OF THIS PLAN SHEET.

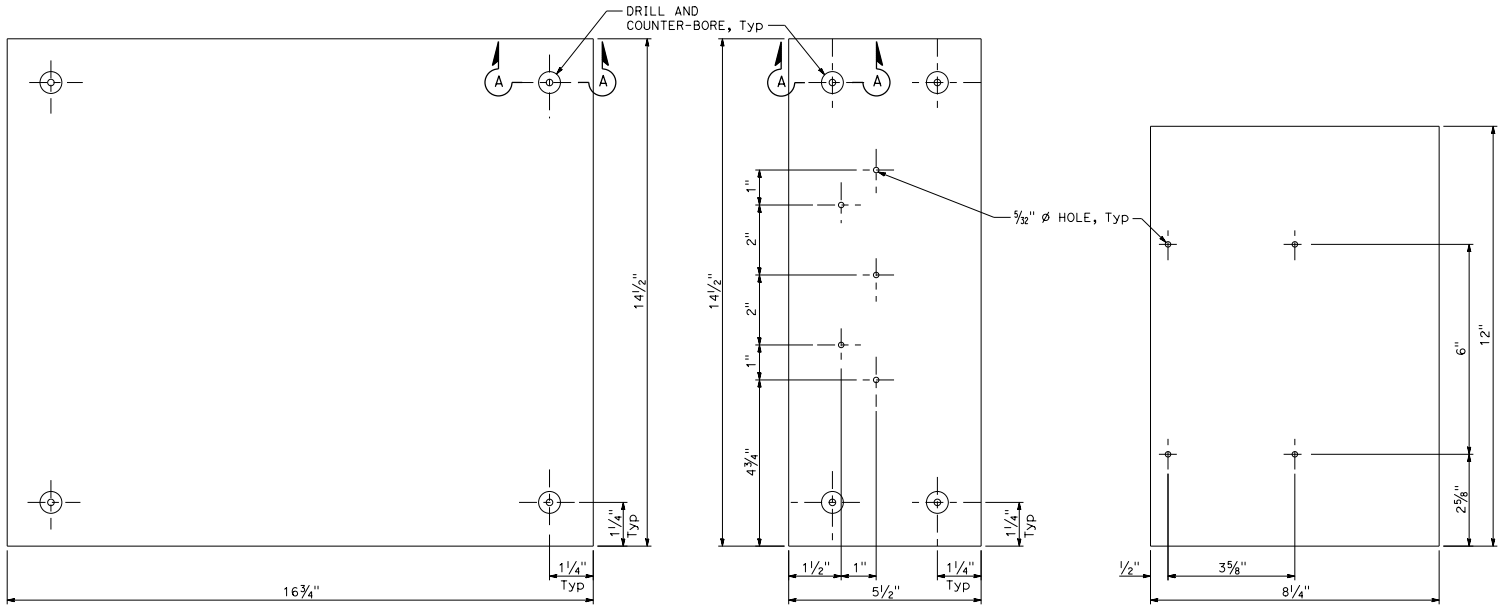

BACKBOARD A
DETAIL A

BACKBOARD B
DETAIL B

BACKBOARD C
DETAIL C

NOTE:

1. Base mounting frame shall be constructed with 0.134" galvanized steel.

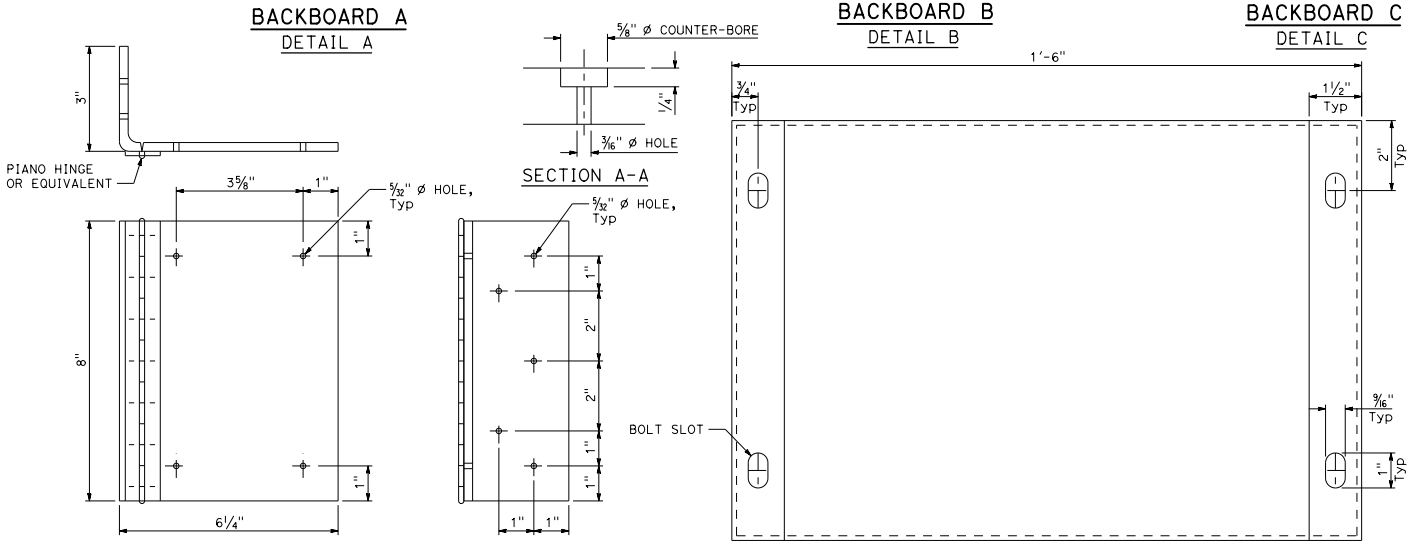

HINGED METAL BRACKET
DETAIL D

CABINET BASE
DETAIL E

STATE OF CALIFORNIA
DEPARTMENT OF TRANSPORTATION

ELECTRICAL SYSTEMS (TELEPHONE DEMARCATION CABINET, TYPE C DETAILS)

NO SCALE

ES-3G

2026 STANDARD PLAN ES-3G

7-1-26

Return to Table of Contents

Dist	COUNTY	ROUTE	POST MILES TOTAL PROJECT	SHEET No.	TOTAL SHEETS

REGISTERED ELECTRICAL ENGINEER

September 18, 2026

PLANS APPROVAL DATE

REGISTERED PROFESSIONAL ENGINEER Bhanupriya Sharma No. E23752 Exp. 12-31-27 ELECTRICAL STATE OF CALIFORNIA

THE STATE OF CALIFORNIA OR ITS OFFICERS OR AGENTS SHALL NOT BE RESPONSIBLE FOR THE ACCURACY OR COMPLETENESS OF SCANNED COPIES OF THIS PLAN SHEET.

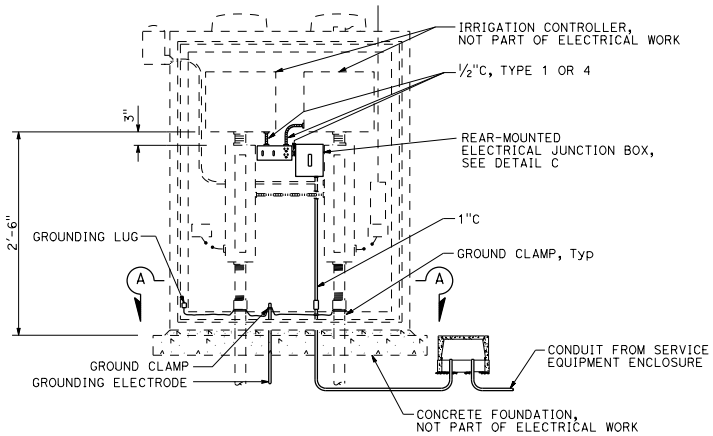

ELEVATION

DETAIL A

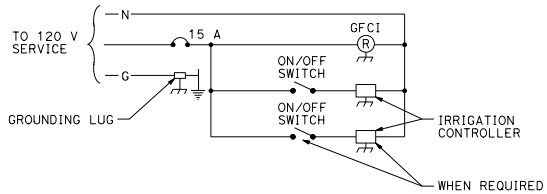

IRRIGATION CONTROLLER ENCLOSURE CABINET WIRING DIAGRAM, Typ

DETAIL B

NOTES:

1. See Standard Plan H10 for other details.
2. Underground electrical work done prior to foundation installation.

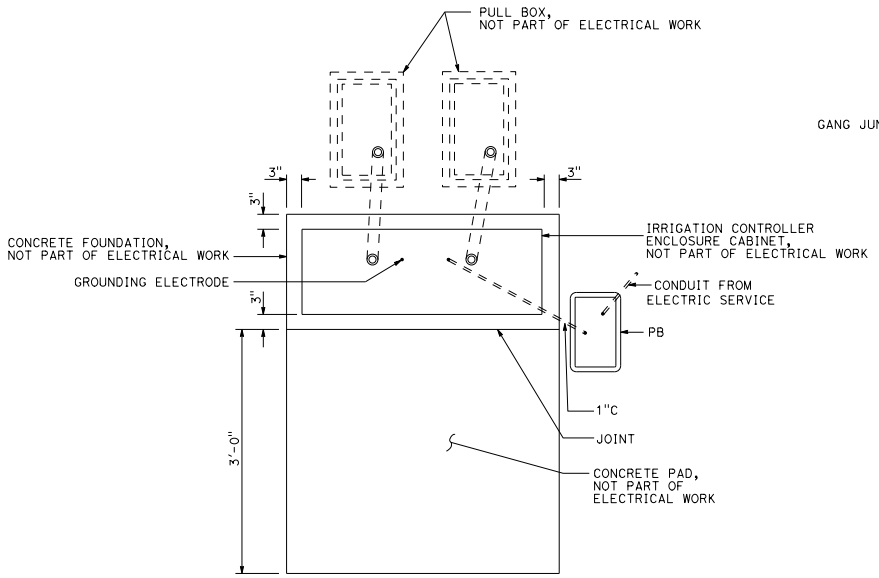

SECTION A-A

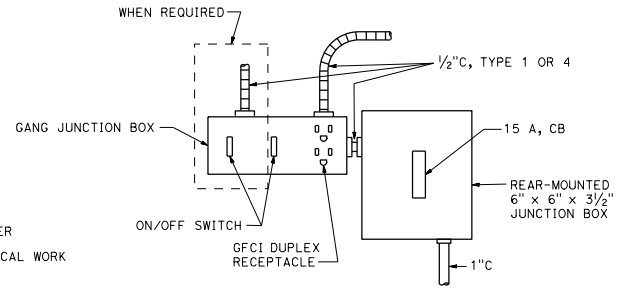

ELECTRICAL JUNCTION BOX LAYOUT

DETAIL C

STATE OF CALIFORNIA
DEPARTMENT OF TRANSPORTATION

ELECTRICAL SYSTEMS (IRRIGATION CONTROLLER ENCLOSURE CABINET)

NO SCALE

ES-3H

2026 STANDARD PLAN ES-3H

7-1-26

Return to Table of Contents

Dist	COUNTY	ROUTE	POST MILES TOTAL PROJECT	SHEET No.	TOTAL SHEETS

REGISTERED ELECTRICAL ENGINEER

September 18, 2026

PLANS APPROVAL DATE

REGISTERED PROFESSIONAL ENGINEER Bhanupriya Sharma No. E23752 Exp. 12-31-27 ELECTRICAL STATE OF CALIFORNIA

THE STATE OF CALIFORNIA OR ITS OFFICERS OR AGENTS SHALL NOT BE RESPONSIBLE FOR THE ACCURACY OR COMPLETENESS OF SCANNED COPIES OF THIS PLAN SHEET.

NOTES:

1. Install connections when BBS is equipped with this option.
2. Install and connect harness for BBS or GT-BBS.

ABBREVIATIONS:

TBS - TERMINAL BLOCK SERVICE
UBS - UTILITY TO BBS
EQP - EQUIPMENT CIRCUIT
GT - GREEN TECHNOLOGY

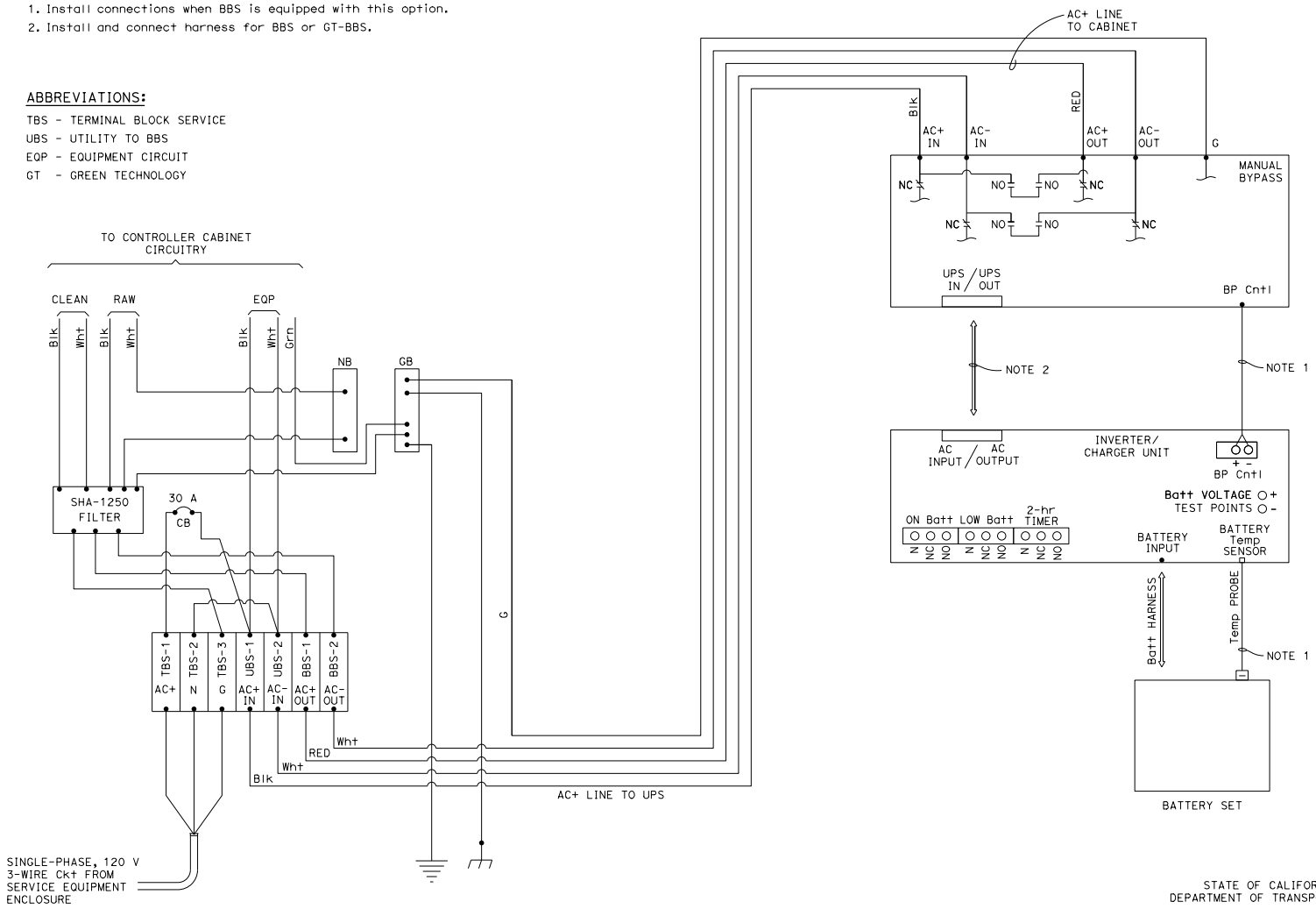

STATE OF CALIFORNIA
DEPARTMENT OF TRANSPORTATION

ELECTRICAL SYSTEMS (ELECTRONICS ASSEMBLY CONNECTION DIAGRAM) (BATTERY BACKUP SYSTEM)

NO SCALE

ES-3K

2026 STANDARD PLAN ES-3K

7-1-26

Return to Table of Contents

Dist	COUNTY	ROUTE	POST MILES TOTAL PROJECT	SHEET No.	TOTAL SHEETS

REGISTERED ELECTRICAL ENGINEER

September 18, 2026
PLANS APPROVAL DATE

REGISTERED PROFESSIONAL ENGINEER Bhanupriya Sharma No. E23752 Exp. 12-31-27 ELECTRICAL STATE OF CALIFORNIA

THE STATE OF CALIFORNIA OR ITS OFFICERS OR AGENTS SHALL NOT BE RESPONSIBLE FOR THE ACCURACY OR COMPLETENESS OF SCANNED COPIES OF THIS PLAN SHEET.

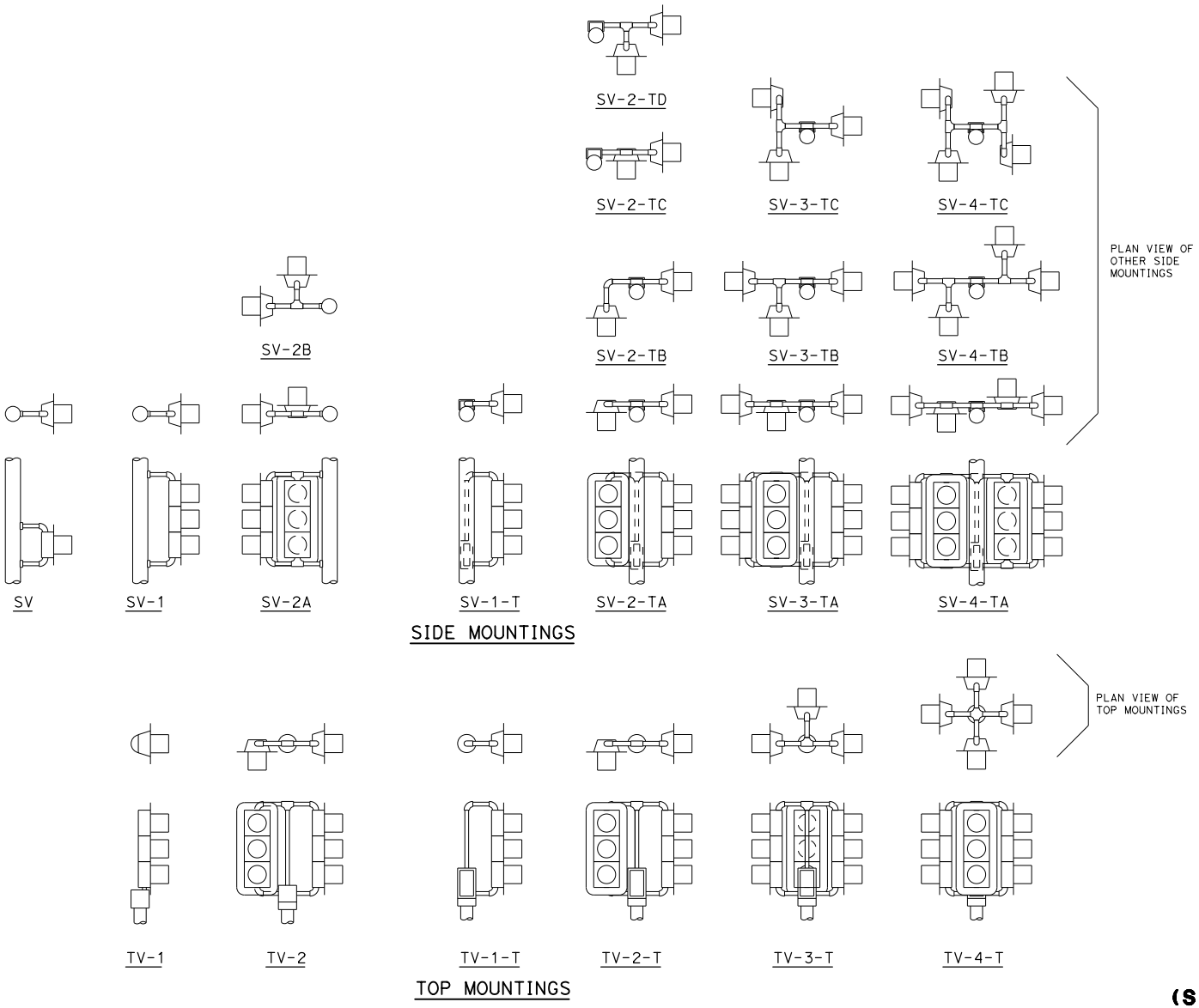

NOTES:

1. Mountings shall be oriented to provide maximum horizontal clearance to adjacent roadway.
2. See Standard Plans ES-4D and ES-4E for attachment fitting details.

ABBREVIATIONS:

SV	- SIDE MOUNTED SIGNAL HEADS
T	- TERMINAL COMPARTMENT
TV	- TOP MOUNTED SIGNAL HEADS
1, 2, 3, 4	- NUMBER OF SIGNAL FACES
A, B, C, D	- CONFIGURATION OF SIGNALS

STATE OF CALIFORNIA
DEPARTMENT OF TRANSPORTATION

ELECTRICAL SYSTEMS (SIGNAL HEAD MOUNTING)

NO SCALE

ES-4A

2026 STANDARD PLAN ES-4A

7-1-26

Return to Table of Contents

Dist	COUNTY	ROUTE	POST MILES TOTAL PROJECT	SHEET No.	TOTAL SHEETS

REGISTERED ELECTRICAL ENGINEER

September 18, 2026
PLANS APPROVAL DATE

REGISTERED PROFESSIONAL ENGINEER Bhanupriya Sharma No. E23752 Exp. 12-31-27 ELECTRICAL STATE OF CALIFORNIA

THE STATE OF CALIFORNIA OR ITS OFFICERS OR AGENTS SHALL NOT BE RESPONSIBLE FOR THE ACCURACY OR COMPLETENESS OF SCANNED COPIES OF THIS PLAN SHEET.

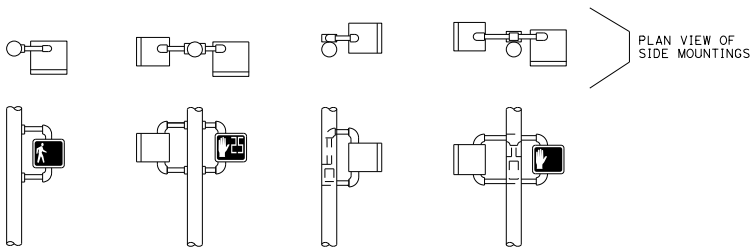

SP-1 SP-2 SP-1-T SP-2-T

SIDE MOUNTINGS

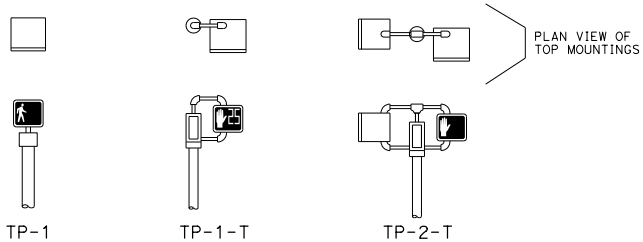

TP-1 TP-1-T TP-2-T

TOP MOUNTINGS

PEDESTRIAN SIGNAL HEAD MOUNTINGS

DETAIL A

PERSON WALKING INTERVAL

FLASHING UPRAISED HAND INTERVAL

STEADY UPRAISED HAND INTERVAL

LED COUNTDOWN PEDESTRIAN SIGNAL FACE MODULE

DETAIL B

NOTES:

1. Mounting shall be oriented to provide maximum horizontal clearance to adjacent roadway.
2. See Standard Plan ES-4D for attachment fittings details.

ABBREVIATIONS:

1, 2 - NUMBER OF SIGNAL FACES
SP - SIDE MOUNTED PEDESTRIAN SIGNAL
T - TERMINAL COMPARTMENT
TP - TOP MOUNTED PEDESTRIAN SIGNAL

STATE OF CALIFORNIA
DEPARTMENT OF TRANSPORTATION

ELECTRICAL SYSTEMS (PEDESTRIAN SIGNAL HEADS)

NO SCALE

ES-4B

7-1-26

2026 STANDARD PLAN ES-4B

Return to Table of Contents

Dist	COUNTY	ROUTE	POST MILES TOTAL PROJECT	SHEET No.	TOTAL SHEETS

REGISTERED ELECTRICAL ENGINEER

September 18, 2026
PLANS APPROVAL DATE

REGISTERED PROFESSIONAL ENGINEER Bhanupriya Sharma No. E23752 Exp. 12-31-27 ELECTRICAL STATE OF CALIFORNIA

THE STATE OF CALIFORNIA OR ITS OFFICERS OR AGENTS SHALL NOT BE RESPONSIBLE FOR THE ACCURACY OR COMPLETENESS OF SCANNED COPIES OF THIS PLAN SHEET.

VISORS

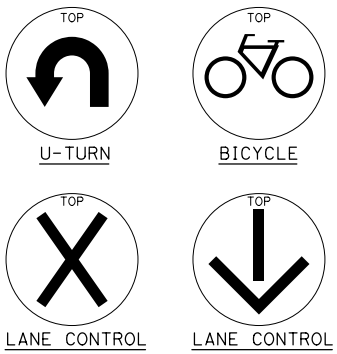

SIGNAL FACES

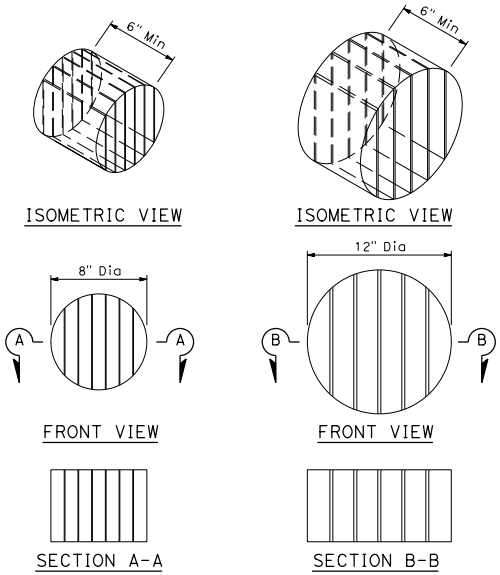

DIRECTIONAL LOUVERS

Directional louvers shall be oriented and secured in place with one plated brass machine screw and nut.

NOTES:

1. Typical signal pole placement unless dimensioned on the plans.
2. For A and B dimensions, see Pole Schedule.

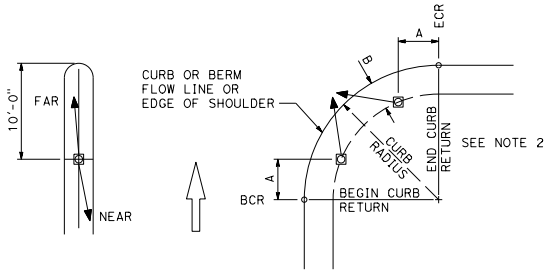

SIGNAL STANDARD PLACEMENT DIMENSIONS AND EQUIPMENT LOCATIONS

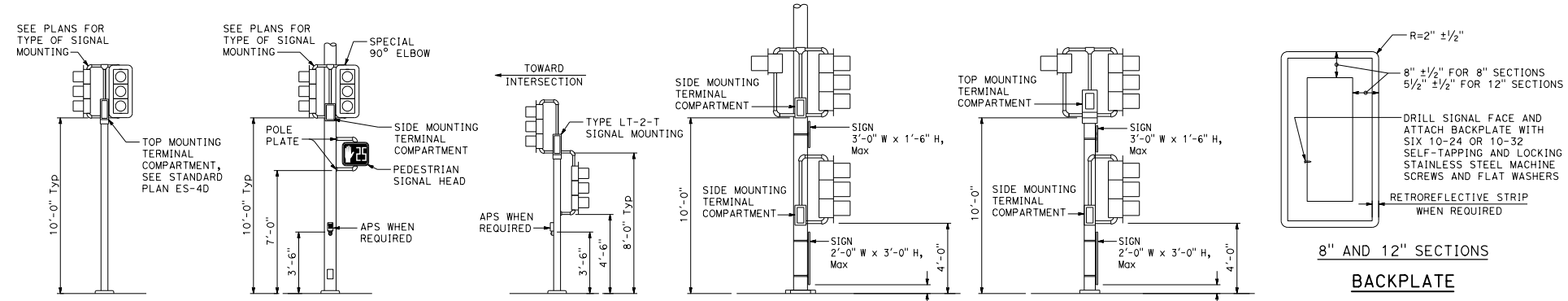

TOP MOUNTED SIGNALS (TV)

Type 1-A, 1-B, 1-C and 1-D standard as indicated on the plans.

SIDE MOUNTED SIGNALS (SV AND SP)

Normally used on standards with luminaire or signal mast arm.

LEFT TURN LANE SIGNAL

Type 1-A, 1-B, 1-C and 1-D standard as indicated on the plans.

RAMP METERING TYPE TS STANDARD

Normally used on standards with luminaire or signal mast arm.

RAMP METERING TYPE 1 STANDARD

Type 1-A, 1-B, 1-C and 1-D standard as indicated on the plans.

8" AND 12" SECTIONS BACKPLATE

TYPICAL SIGNAL HEAD INSTALLATIONS

STATE OF CALIFORNIA
DEPARTMENT OF TRANSPORTATION

ELECTRICAL SYSTEMS (SIGNAL HEADS AND MOUNTINGS)

NO SCALE

ES-4C

7-1-26

2026 STANDARD PLAN ES-4C

Return to Table of Contents

Dist	COUNTY	ROUTE	POST MILES TOTAL PROJECT	SHEET No.	TOTAL SHEETS

REGISTERED ELECTRICAL ENGINEER

September 18, 2026

PLANS APPROVAL DATE

REGISTERED PROFESSIONAL ENGINEER Bhanupriya Sharma No. E23752 Exp. 12-31-27 ELECTRICAL STATE OF CALIFORNIA

THE STATE OF CALIFORNIA OR ITS OFFICERS OR AGENTS SHALL NOT BE RESPONSIBLE FOR THE ACCURACY OR COMPLETENESS OF SCANNED COPIES OF THIS PLAN SHEET.

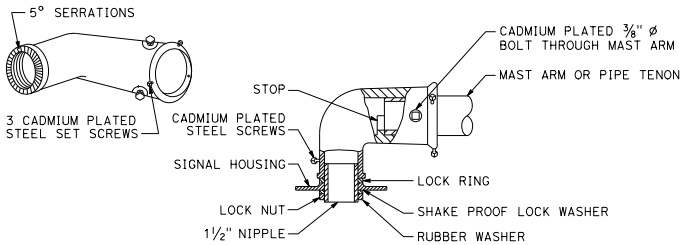

TYPE MAT
MAST ARM MOUNTING
For 2 NPS pipe, see Note 1.

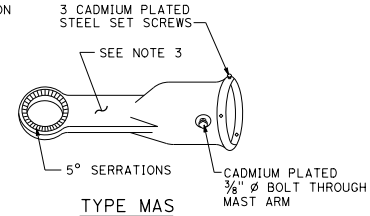

TYPE MAS
MAST ARM MOUNTING
For 2 NPS pipe, see Note 1.

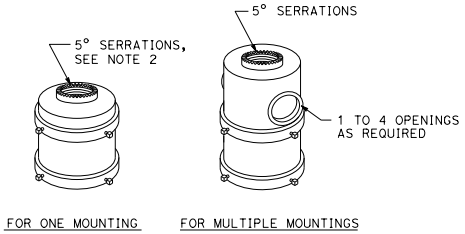

TOP MOUNTINGS
For 4 NPS pipe, see Note 2.

SIGNAL SLIP FITTERS

NOTES:

1. After mast arm signal has been plumbed and secured, drill 7/16" hole through mast arm tenon in line with slip fitter hole. Place a cadmium plated ⅜" ø galvanized bolt with washer under bolt head through hole and secure with washer, nut, and locknut. Seal openings between mast arm mountings and mast arm with mastic.
2. Threaded top mounted slip fitter openings shall be 1½ NPS. Serrations in fittings shall match those on bottom of signal heads or in lock ring. Top opening shall be offset when backplate is used.
3. Wireway shall have a cross section area of 0.95 square inch minimum. Minimum width of ½".

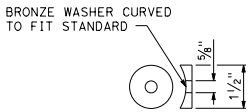

DETAIL C

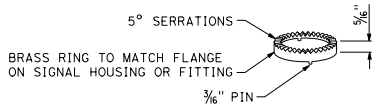

LOCK RING
Use where locking ring is not integral With signal housing or fitting.

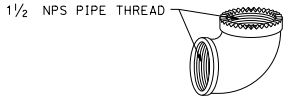

SPECIAL 90° ELBOW
One for each signal head, except those With special slip fitter mounting

MISCELLANEOUS MOUNTING HARDWARE

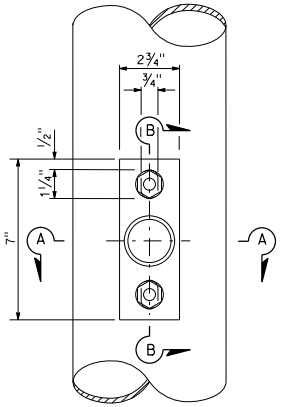

TOP VIEW

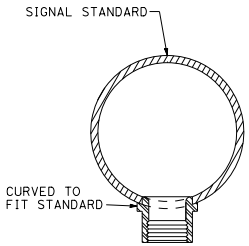

SECTION A-A

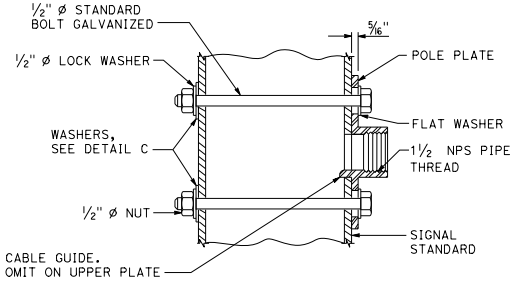

SECTION B-B

POLE PLATE FOR SIDE MOUNTED SIGNAL HEAD WITHOUT TERMINAL COMPARTMENT

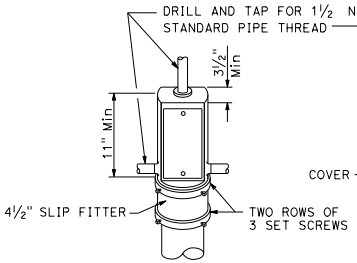

TOP MOUNTING

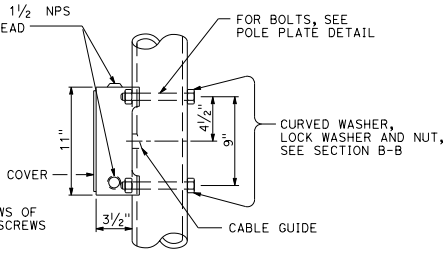

SIDE MOUNTING

TERMINAL COMPARTMENT

STATE OF CALIFORNIA
DEPARTMENT OF TRANSPORTATION

ELECTRICAL SYSTEMS (SIGNAL HEAD MOUNTING)

NO SCALE

ES-4D

2026 STANDARD PLAN ES-4D

7-1-26

Return to Table of Contents

Dist	COUNTY	ROUTE	POST MILES TOTAL PROJECT	SHEET No.	TOTAL SHEETS

REGISTERED ELECTRICAL ENGINEER

September 18, 2026
PLANS APPROVAL DATE

REGISTERED PROFESSIONAL ENGINEER Bhanupriya Sharma No. E23752 Exp. 12-31-27 ELECTRICAL STATE OF CALIFORNIA

THE STATE OF CALIFORNIA OR ITS OFFICERS OR AGENTS SHALL NOT BE RESPONSIBLE FOR THE ACCURACY OR COMPLETENESS OF SCANNED COPIES OF THIS PLAN SHEET.

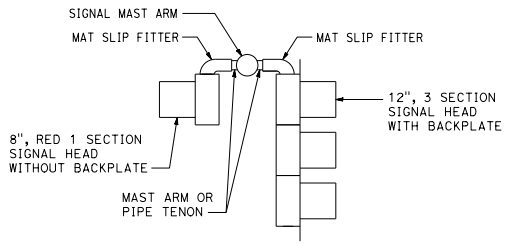

TYPE MAT-RM

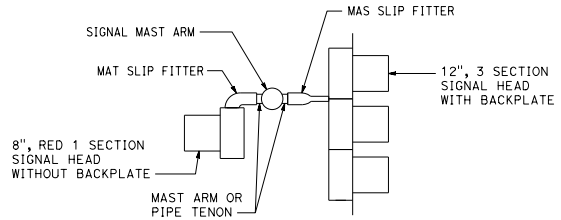

TYPE MAS-RM

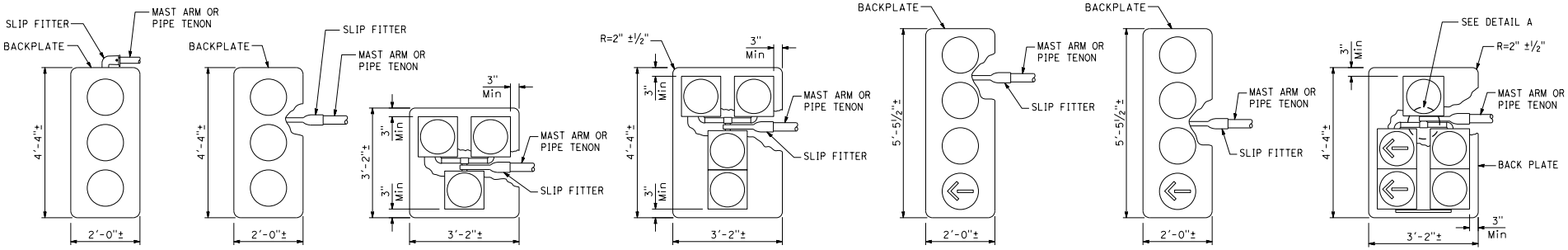

TYPE MAT TYPE MAS TYPE MAS-3A TYPE MAS-4A TYPE MAS-4B TYPE MAS-4C TYPE MAS-5A

MAST ARM MOUNTINGS

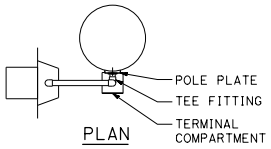

PLAN

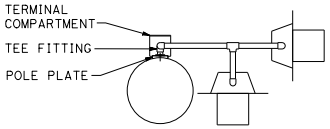

PLAN

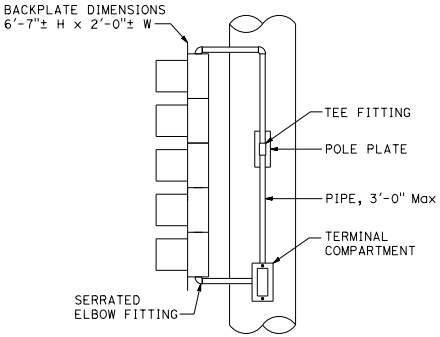

SIDE VIEW

SV-1-T WITH 5 SIGNAL SECTIONS

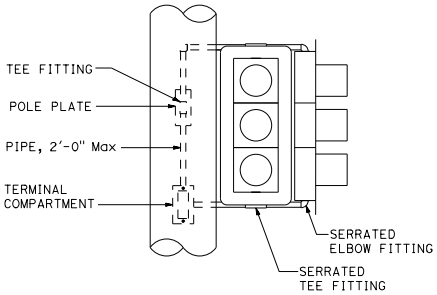

SIDE VIEW

SV-2-TD

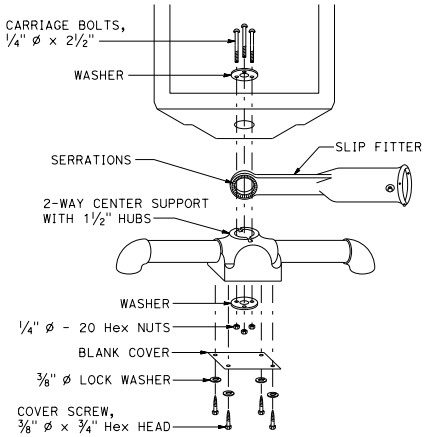

DETAIL A

STATE OF CALIFORNIA
DEPARTMENT OF TRANSPORTATION

ELECTRICAL SYSTEM (SIGNAL HEADS)

NO SCALE

ES-4E

2026 STANDARD PLAN ES-4E

7-1-26

Return to Table of Contents

Dist	COUNTY	ROUTE	POST MILES TOTAL PROJECT	SHEET No.	TOTAL SHEETS

REGISTERED ELECTRICAL ENGINEER

September 18, 2026
PLANS APPROVAL DATE

REGISTERED PROFESSIONAL ENGINEER Bhanupriya Sharma No. E23752 Exp. 12-31-27 ELECTRICAL STATE OF CALIFORNIA

THE STATE OF CALIFORNIA OR ITS OFFICERS OR AGENTS SHALL NOT BE RESPONSIBLE FOR THE ACCURACY OR COMPLETENESS OF SCANNED COPIES OF THIS PLAN SHEET.

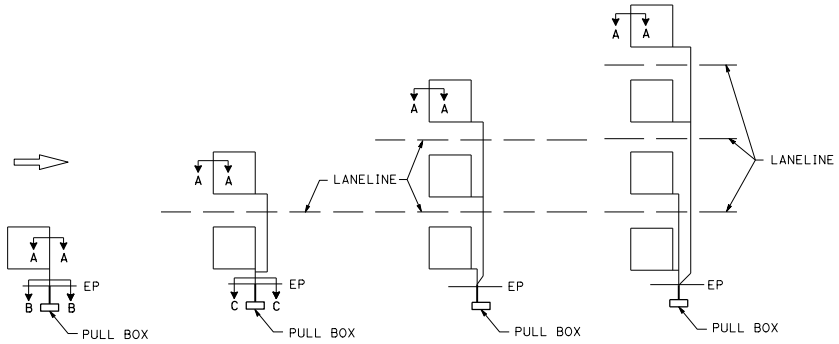

SAW CUT DETAILS

Type A loop detector configurations illustrated

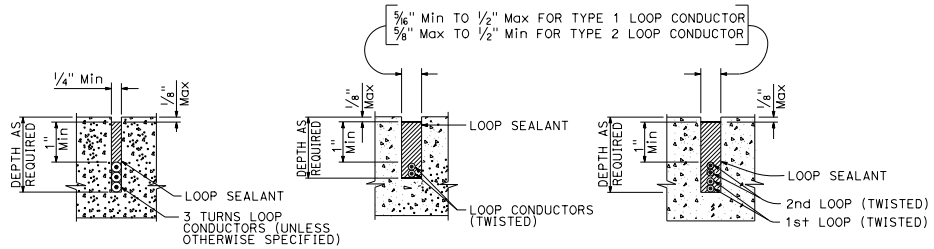

SECTION A-A SECTION B-B SECTION C-C

SLOT DETAILS - TYPE 1 AND TYPE 2 LOOP CONDUCTOR

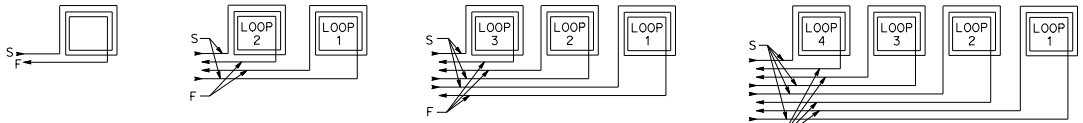

WINDING DETAILS

ABBREVIATIONS:

S - START
F - FINISH

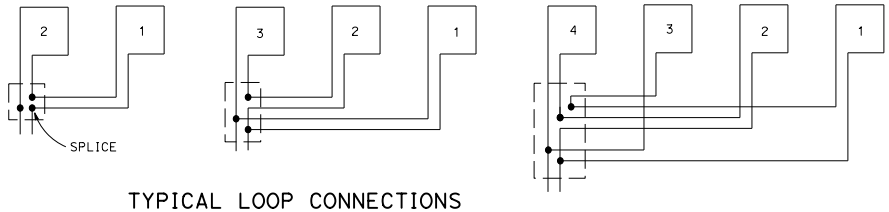

TYPICAL LOOP CONNECTIONS

Dashed lines represent the pull box

STATE OF CALIFORNIA
DEPARTMENT OF TRANSPORTATION

ELECTRICAL SYSTEMS (LOOP DETECTORS)

NO SCALE

ES-5A

2026 STANDARD PLAN ES-5A

7-1-26

Return to Table of Contents

Dist	COUNTY	ROUTE	POST MILES TOTAL PROJECT	SHEET No.	TOTAL SHEETS

REGISTERED ELECTRICAL ENGINEER

September 18, 2026
PLANS APPROVAL DATE

REGISTERED PROFESSIONAL ENGINEER Bhanupriya Sharma No. E23752 Exp. 12-31-27 ELECTRICAL STATE OF CALIFORNIA

THE STATE OF CALIFORNIA OR ITS OFFICERS OR AGENTS SHALL NOT BE RESPONSIBLE FOR THE ACCURACY OR COMPLETENESS OF SCANNED COPIES OF THIS PLAN SHEET.

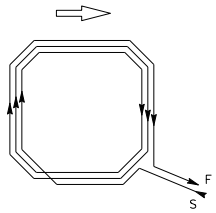

WINDING DETAIL

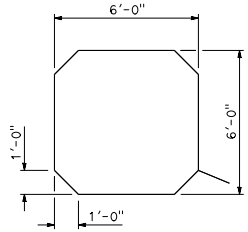

SAW CUT DETAIL

TYPE A LOOP DETECTOR CONFIGURATION

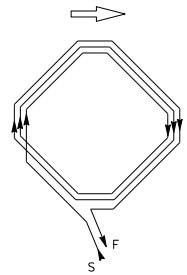

WINDING DETAIL

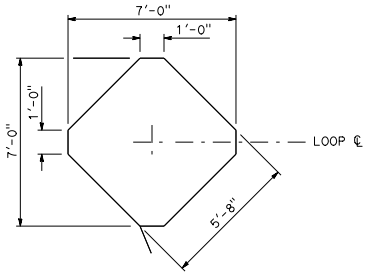

SAW CUT DETAIL

TYPE B LOOP DETECTOR CONFIGURATION

NOTES:

1. Round corners of acute angle saw cuts to prevent damage to conductors.
2. Typical distance separating loops from edge to edge is 10' for Type A, B, D, E, and F installation in single lane.
3. Use Type D and F loops for limit line detection and bicycle lanes.

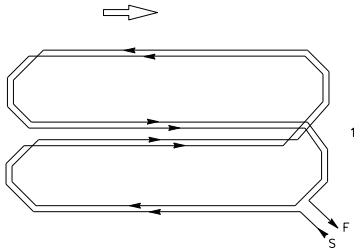

WINDING DETAIL

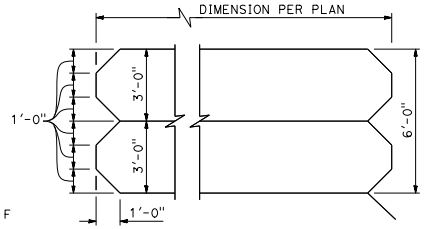

SAW CUT DETAIL

TYPE C LOOP DETECTOR CONFIGURATION

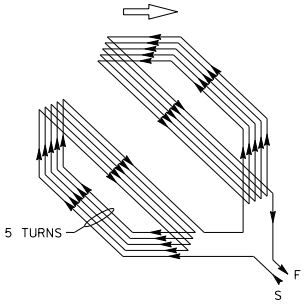

WINDING DETAIL

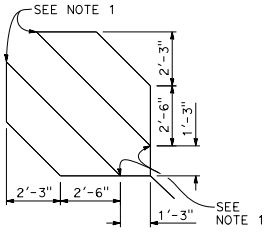

SAW CUT DETAIL

TYPE D LOOP DETECTOR CONFIGURATION

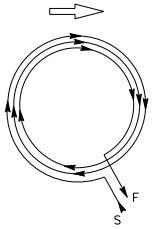

WINDING DETAIL

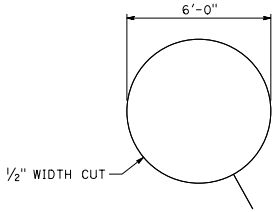

SAW CUT DETAIL

TYPE E LOOP DETECTOR CONFIGURATION

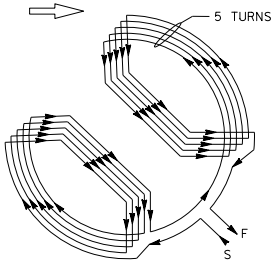

WINDING DETAIL

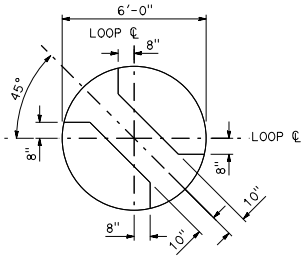

SAW CUT DETAIL

TYPE F LOOP DETECTOR CONFIGURATION

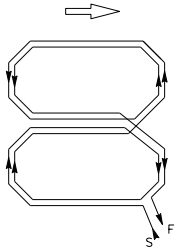

WINDING DETAIL

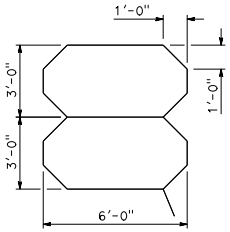

SAW CUT DETAIL

TYPE Q LOOP DETECTOR CONFIGURATION

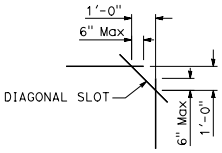

PLAN VIEW OF DIAGONAL SLOT AT CORNERS

STATE OF CALIFORNIA
DEPARTMENT OF TRANSPORTATION

ELECTRICAL SYSTEMS (DETECTORS)

NO SCALE

ES-5B

2026 STANDARD PLAN ES-5B

7-1-26

Return to Table of Contents

Dist	COUNTY	ROUTE	POST MILES TOTAL PROJECT	SHEET No.	TOTAL SHEETS

REGISTERED ELECTRICAL ENGINEER

September 18, 2026

PLANS APPROVAL DATE

REGISTERED PROFESSIONAL ENGINEER Bhanupriya Sharma No. E23752 Exp. 12-31-27 ELECTRICAL STATE OF CALIFORNIA

THE STATE OF CALIFORNIA OR ITS OFFICERS OR AGENTS SHALL NOT BE RESPONSIBLE FOR THE ACCURACY OR COMPLETENESS OF SCANNED COPIES OF THIS PLAN SHEET.

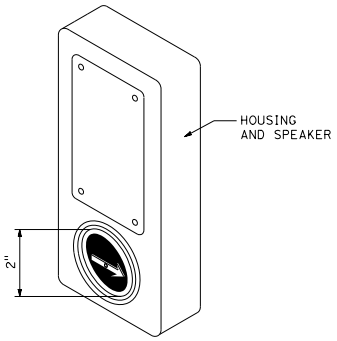

ACCESSIBLE PEDESTRIAN SIGNAL

DETAIL A

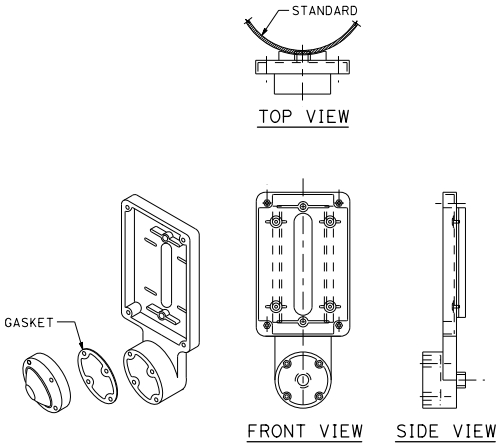

TYPE B PUSH BUTTON ASSEMBLY

DETAIL B

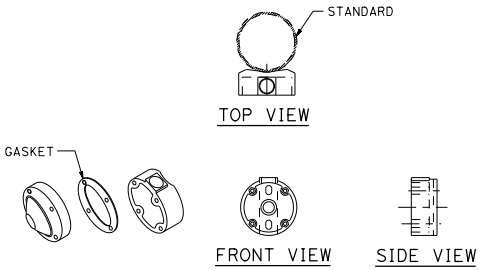

TYPE C PUSH BUTTON ASSEMBLY

DETAIL C

STATE OF CALIFORNIA
DEPARTMENT OF TRANSPORTATION

ELECTRICAL SYSTEMS (ACCESSIBLE PEDESTRIAN SIGNAL AND PUSH BUTTON ASSEMBLIES)

NO SCALE

ES-5C

2026 STANDARD PLAN ES-5C

7-1-26

Return to Table of Contents

Dist	COUNTY	ROUTE	POST MILES TOTAL PROJECT	SHEET No.	TOTAL SHEETS

REGISTERED ELECTRICAL ENGINEER

September 18, 2026
PLANS APPROVAL DATE

REGISTERED PROFESSIONAL ENGINEER Bhanupriya Sharma No. E23752 Exp. 12-31-27 ELECTRICAL STATE OF CALIFORNIA

THE STATE OF CALIFORNIA OR ITS OFFICERS OR AGENTS SHALL NOT BE RESPONSIBLE FOR THE ACCURACY OR COMPLETENESS OF SCANNED COPIES OF THIS PLAN SHEET.

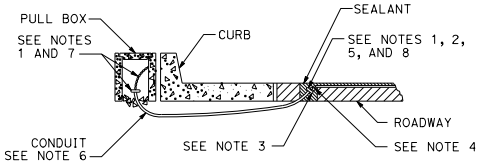

TYPE A
CURB TERMINATION DETAIL

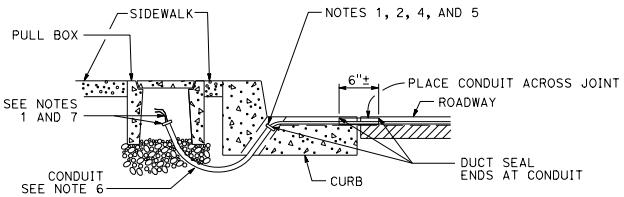

CROSS SECTION

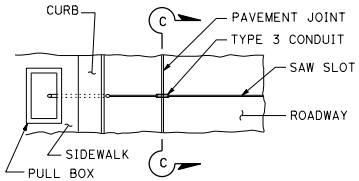

PLAN VIEW

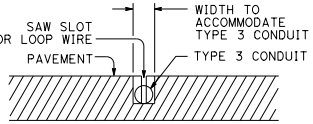

SECTION C-C

TYPE B
CURB TERMINATION DETAIL

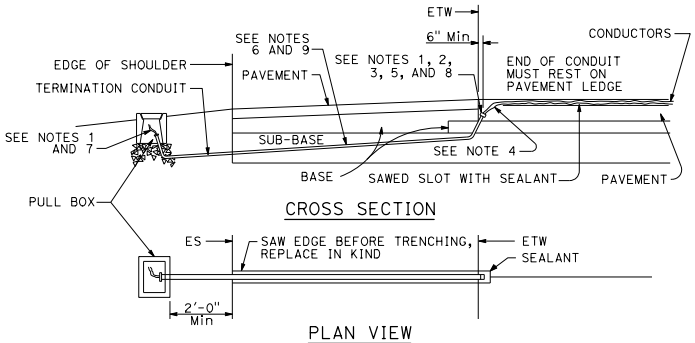

CROSS SECTION

PLAN VIEW
SHOULDER TERMINATION DETAILS

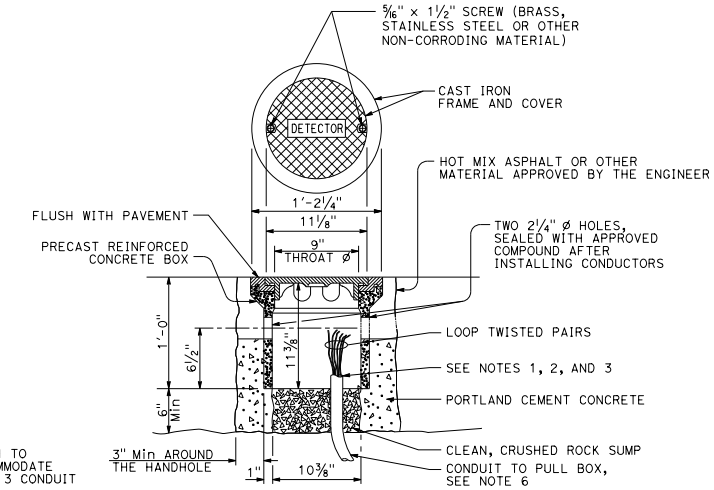

DETECTOR HANDHOLE DETAIL

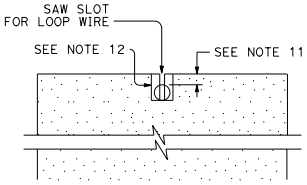

SECTION A-A

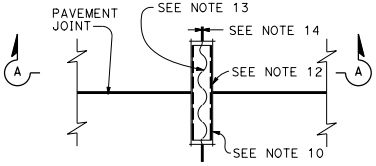

PLAN VIEW
TYPICAL LOOP LEAD-IN DETAIL AT PAVEMENT JOINT

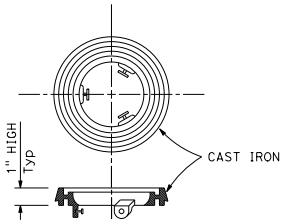

LOCKING GRADE RING

NOTES:

1. Bushing shall be used at end of conduit.
2. Tape detector conductors 3" each side of bushings.
3. Install duct seal compound to each end of termination conduit before installing sealant.
4. Round all sharp edges where detector conductors have to pass.
5. End of conduit shall be 3 1/8" below roadway surface.
6.

Conduit size	Loop conductors
1"C minimum	1 to 2 pairs
1 1/2"C minimum	3 to 4 pairs
2"C minimum	5 or more pairs

7. Splice detector conductors to detector lead-in-cable.
8. Location of detector handhole when shown on plans.
9. When the shoulder and traveled way are paved with the same material and there is no joint between them, the conduit shall extend only 2'-0" into the shoulder pavement.
10. 3/4"C, Type 3 conduit 6" long minimum, plug both ends with duct compound to keep out sealant.
11. 1/2" Minimum between top of conduit and pavement surface.
12. Sawcut shall not exceed 1" in width and 1/8" longer than conduit to be installed.
13. Conductors with 1/2" minimum slack inside conduit.
14. Inductive loop detector saw slot.

STATE OF CALIFORNIA
DEPARTMENT OF TRANSPORTATION

ELECTRICAL SYSTEMS (CURB AND SHOULDER TERMINATION, TRENCH, AND HANDHOLE DETAILS)

NO SCALE

ES-5D

2026 STANDARD PLAN ES-5D

7-1-26

Return to Table of Contents

Dist	COUNTY	ROUTE	POST MILES TOTAL PROJECT	SHEET No.	TOTAL SHEETS

REGISTERED ELECTRICAL ENGINEER

September 18, 2026
PLANS APPROVAL DATE

REGISTERED PROFESSIONAL ENGINEER Bhanupriya Sharma No. E23752 Exp. 12-31-27 ELECTRICAL STATE OF CALIFORNIA

THE STATE OF CALIFORNIA OR ITS OFFICERS OR AGENTS SHALL NOT BE RESPONSIBLE FOR THE ACCURACY OR COMPLETENESS OF SCANNED COPIES OF THIS PLAN SHEET.

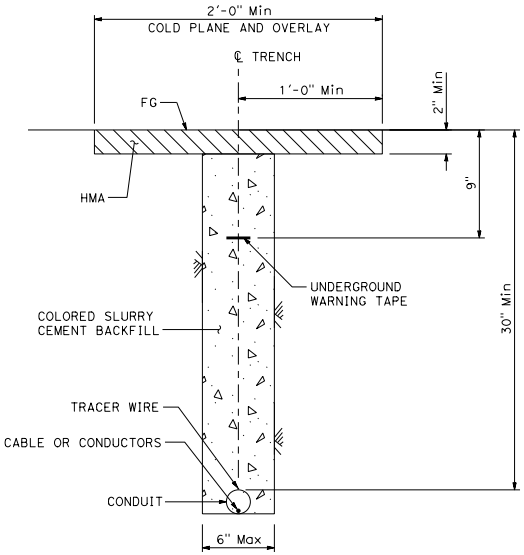

TRENCH IN PAVEMENT

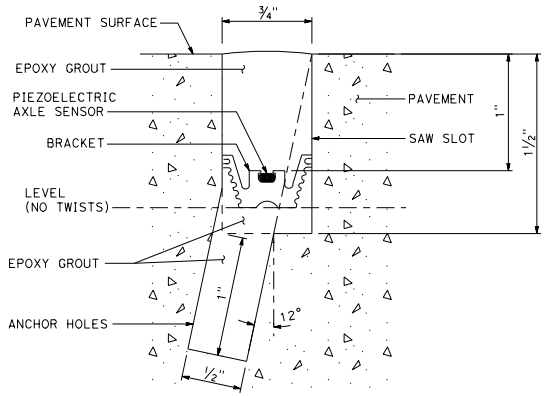

SECTION A-A

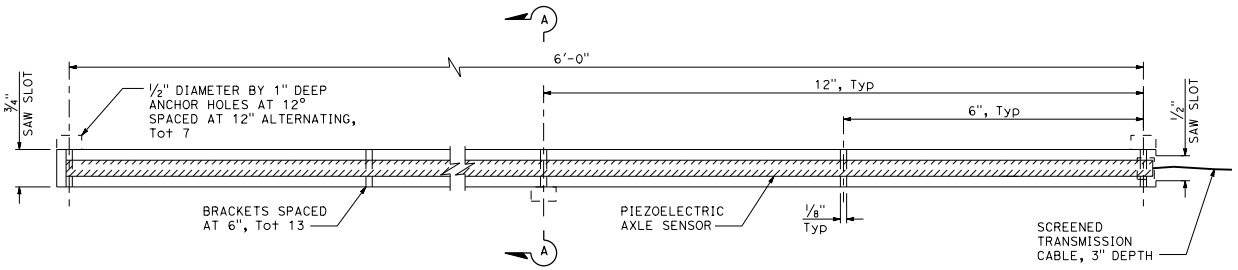

PLAN

PIEZOELECTRIC AXLE SENSOR

STATE OF CALIFORNIA
DEPARTMENT OF TRANSPORTATION

ELECTRICAL SYSTEMS (TRENCH IN PAVEMENT AND PIEZOELECTRIC AXLE SENSOR DETAILS)

NO SCALE

ES-5E

7-1-26

2026 STANDARD PLAN ES-5E

Return to Table of Contents

Dist	COUNTY	ROUTE	POST MILES TOTAL PROJECT	SHEET No.	TOTAL SHEETS

REGISTERED CIVIL ENGINEER

September 18, 2026

PLANS APPROVAL DATE

REGISTERED PROFESSIONAL ENGINEER Mahesh Shrestha No. C80133 Exp. 9-30-26 CIVIL STATE OF CALIFORNIA

THE STATE OF CALIFORNIA OR ITS OFFICERS OR AGENTS SHALL NOT BE RESPONSIBLE FOR THE ACCURACY OR COMPLETENESS OF SCANNED COPIES OF THIS PLAN SHEET.

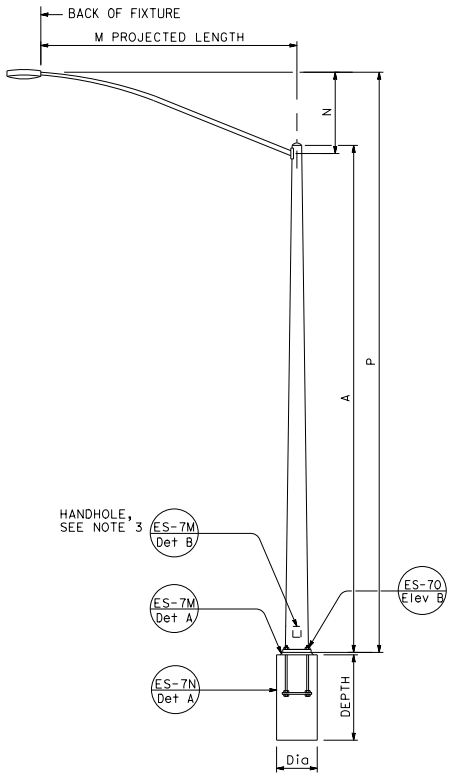

TYPE 15 AND TYPE 21

ELEVATION A

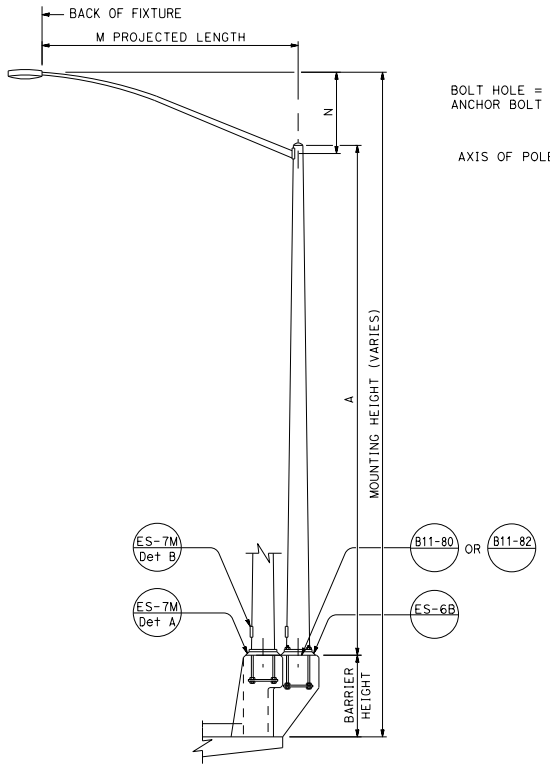

TYPE 15 AND TYPE 21 BARRIER RAIL MOUNTED

ELEVATION B

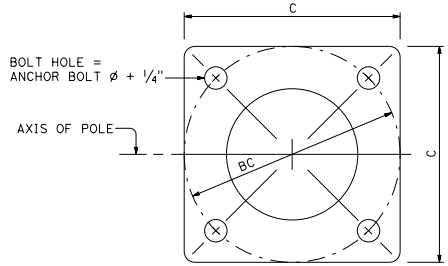

BASE PLATE

DETAIL A

NOTES:

1. [ ] Indicates mast arm length to be used unless otherwise noted on the plans.
2. For Type 15-SB, use Type 15 Standard with Type 30 slip base plate details, see Standard Plan ES-6F.
3. Handhole shall be located on the downstream side of traffic.
4. For additional notes and details, see Standard Plans ES-7M and ES-7N.

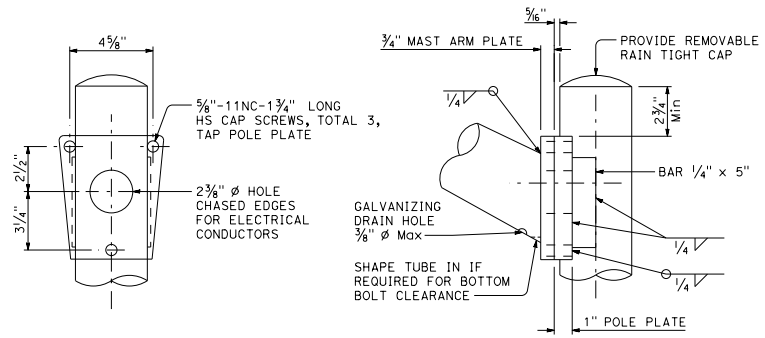

FRONT VIEW

SIDE VIEW

LUMINAIRE MAST ARM CONNECTION

DETAIL R

LUMINAIRE MAST ARM DATA					
M PROJECTED LENGTH	N RISE	Min OD AT POLE	NOMINAL THICKNESS	P	
				TYPE 15	TYPE 21
6'-0"	2'-0"±	3 1/4"	0.1196"	31'-6"±	36'-6"±
8'-0"	2'-6"±	3 1/2"		32'-0"±	37'-0"±
10'-0"	3'-3"±	3 7/8"		32'-9"±	37'-9"±
[12'-0"]	4'-3"±			33'-9"±	38'-9"±
15'-0"	4'-9"±	4 1/4"		34'-3"±	39'-3"±

POLE DATA					BASE PLATE DATA				CIDH PILE FOUNDATION	
POLE TYPE	A HEIGHT	Min OD		WALL THICKNESS	C	BC	THICKNESS	ANCHOR BOLT SIZE	Dia	DEPTH
		BASE	TOP							
15	30'-0"	8"	3 11/16"	0.1196"	1'-0"	1'-0"	1 1/2"	1" ø x 36" *	2'-6"	6'-0"
21	35'-0"	8 5/8"	3 9/16"	0.1793"			2"	1 1/4" ø x 36" *		7'-0"

* FOR BARRIER RAIL BOLTS, SEE STANDARD PLAN ES-6B.

STATE OF CALIFORNIA
DEPARTMENT OF TRANSPORTATION

ELECTRICAL SYSTEMS (LIGHTING STANDARD, TYPES 15 AND 21)

NO SCALE

ES-6A

2026 STANDARD PLAN ES-6A

7-1-26

Return to Table of Contents

Dist	COUNTY	ROUTE	POST MILES TOTAL PROJECT	SHEET No.	TOTAL SHEETS

REGISTERED CIVIL ENGINEER

September 18, 2026

PLANS APPROVAL DATE

REGISTERED PROFESSIONAL ENGINEER Mahesh Shrestha No. C80133 Exp. 9-30-26 CIVIL STATE OF CALIFORNIA

THE STATE OF CALIFORNIA OR ITS OFFICERS OR AGENTS SHALL NOT BE RESPONSIBLE FOR THE ACCURACY OR COMPLETENESS OF SCANNED COPIES OF THIS PLAN SHEET.

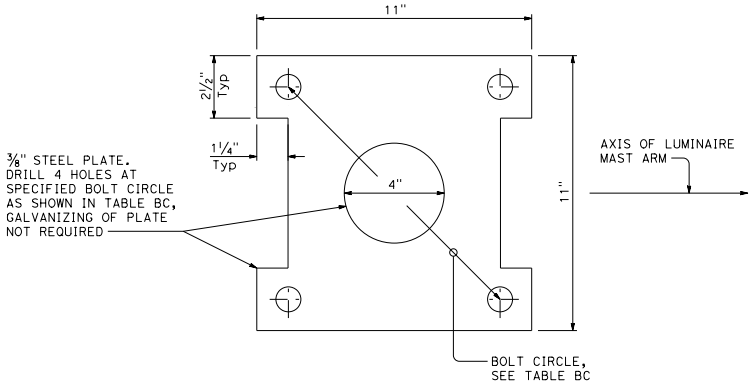

ANCHOR PLATE

DETAIL A

TABLE BC

TYPE	BC = BOLT CIRCLE	ANCHOR BOLT DIAMETER	COUPLING NUT BASIC LENGTH	SET SCREW LENGTH DETAIL B-2
15	1'-0"	1"	3"	1½"
21		1¼"	3¾"	1⅞"

NOTES:

1. Anchor bolt or stud length shall be such that thread extends ½" maximum above nut on level base plate after grouting, see Detail N.
2. Electrolier anchor bolts shall be held in position for pouring by means of anchor plates and suitable templates. Deviation from the true position, vertical and height shall not exceed 1/16".
3. See railing sheets for reinforcement and structural details at electroliers and pull boxes.

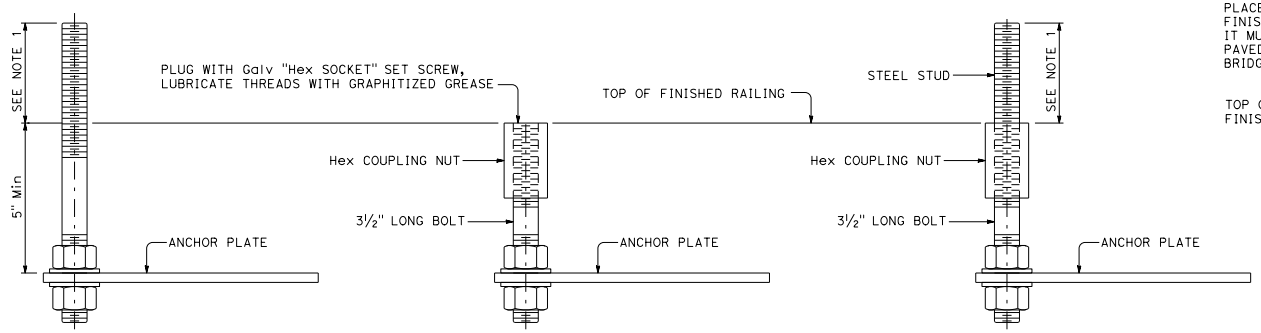

FOR IMMEDIATE INSTALLATION

DETAIL B-1

FOR FUTURE INSTALLATION WITH PLUG

DETAIL B-2

FOR INSTALLATION ON FUTURE ANCHORAGE WITH STUD

DETAIL B-3

ELECTROLIER ANCHORAGES

DETAIL B

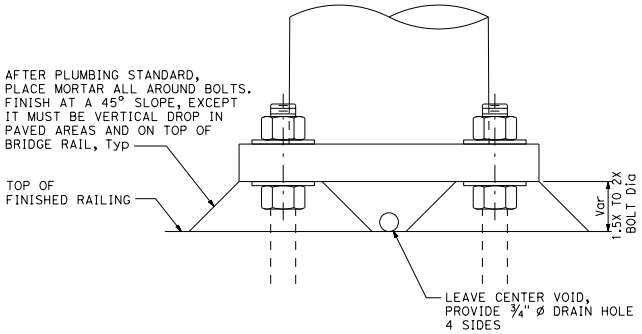

GROUTING AT ELECTROLIER

DETAIL N

STATE OF CALIFORNIA
DEPARTMENT OF TRANSPORTATION

ELECTRICAL SYSTEMS (ELECTROLIER ANCHORAGE AND GROUTING FOR TYPES 15 AND 21, BARRIER RAIL MOUNTED)

NO SCALE

ES-6B

2026 STANDARD PLAN ES-6B

7-1-26

Return to Table of Contents

Dist	COUNTY	ROUTE	POST MILES TOTAL PROJECT	SHEET No.	TOTAL SHEETS

REGISTERED CIVIL ENGINEER

September 18, 2026
PLANS APPROVAL DATE

REGISTERED PROFESSIONAL ENGINEER
Mahesh Shrestha
No. C80133
Exp. 9-30-26
CIVIL
STATE OF CALIFORNIA

THE STATE OF CALIFORNIA OR ITS OFFICERS OR AGENTS SHALL NOT BE RESPONSIBLE FOR THE ACCURACY OR COMPLETENESS OF SCANNED COPIES OF THIS PLAN SHEET.

LUMINAIRE MAST ARM DATA

M PROJECTED LENGTH	N RISE	Min OD AT POLE	NOMINAL THICKNESS
15'-0"	4'-9"±	4½"	0.1196"
20'-0"	2'-6"±	5"	0.1793"

POLE DATA

POLE EXTENSION TYPE	HEIGHT "H"	Min OD		THICKNESS
		BASE	TOP	
5	5'-0"	6½"	5 11/16"	0.1793"
10	10'-0"	7¼"		

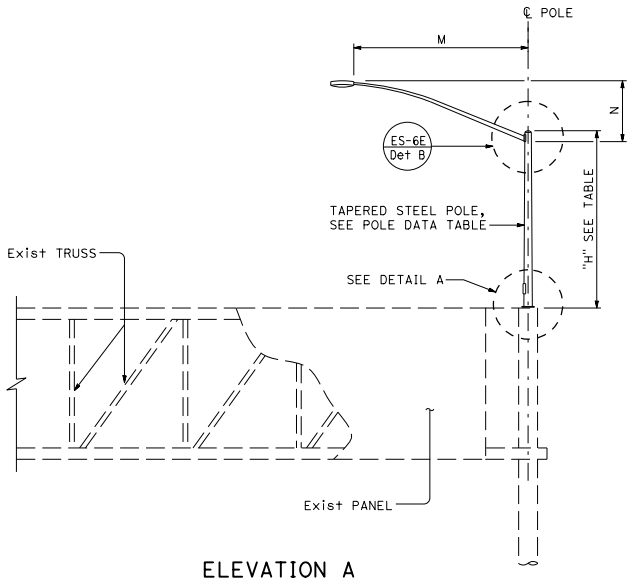

ELEVATION A

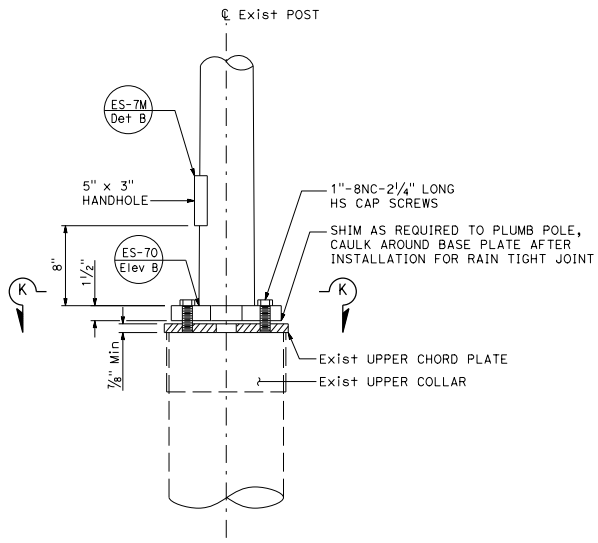

DETAIL A

NOTES:

1. The Contractor shall verify all controlling field dimensions before ordering or fabricating any material.
2. Bolt hole locations may vary at the discretion of the Engineer.
3. For Wind Loading, see Standard Plan ES-7M.
4. See Standard Plan S113 for Versatile Truss (similar for Overhead Truss).
5. Materials (Structural Steel):
   a. fy = 55,000 psi tapered steel tube (pole)
   b. fy = 50,000 psi unless otherwise noted

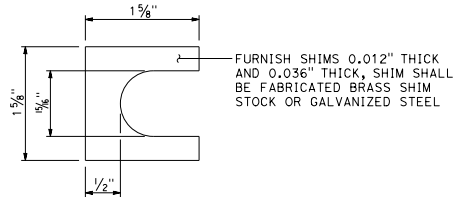

SHIM DETAIL

DETAIL B

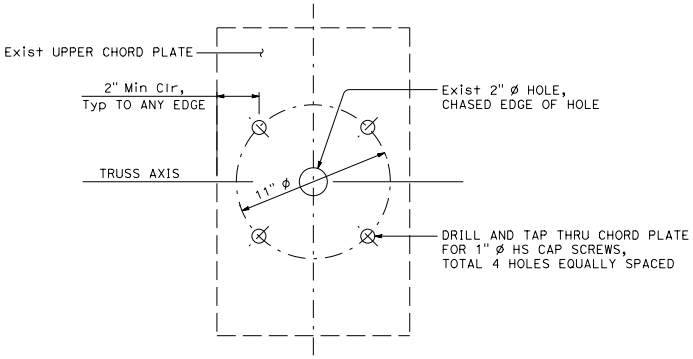

UPPER CHORD PLATE

DETAIL C

See Note 4

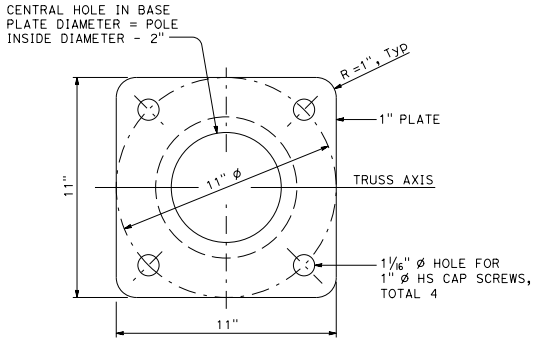

SECTION K-K

STATE OF CALIFORNIA
DEPARTMENT OF TRANSPORTATION

ELECTRICAL SYSTEMS (LIGHTING STANDARD, TYPES 5 AND 10, OVERHEAD SIGN MOUNTED)

NO SCALE

ES-6C

2026 STANDARD PLAN ES-6C

7-1-26

Return to Table of Contents

Dist	COUNTY	ROUTE	POST MILES TOTAL PROJECT	SHEET No.	TOTAL SHEETS

REGISTERED CIVIL ENGINEER

September 18, 2026

PLANS APPROVAL DATE

REGISTERED PROFESSIONAL ENGINEER Mahesh Shrestha No. C80133 Exp. 9-30-26 CIVIL STATE OF CALIFORNIA

THE STATE OF CALIFORNIA OR ITS OFFICERS OR AGENTS SHALL NOT BE RESPONSIBLE FOR THE ACCURACY OR COMPLETENESS OF SCANNED COPIES OF THIS PLAN SHEET.

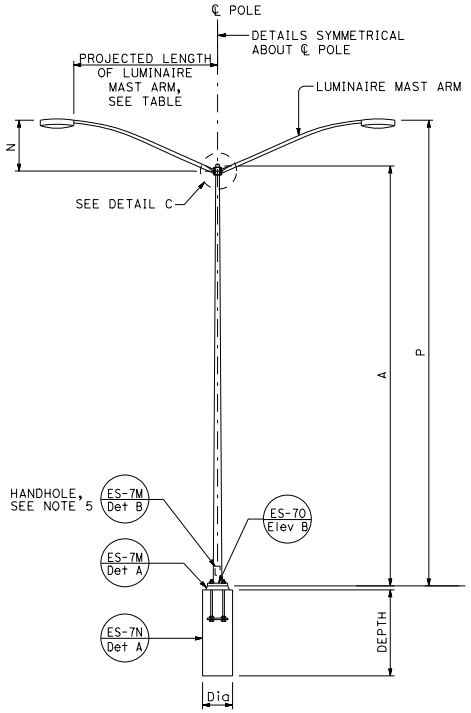

TYPE 15D AND TYPE 21D

ELEVATION A

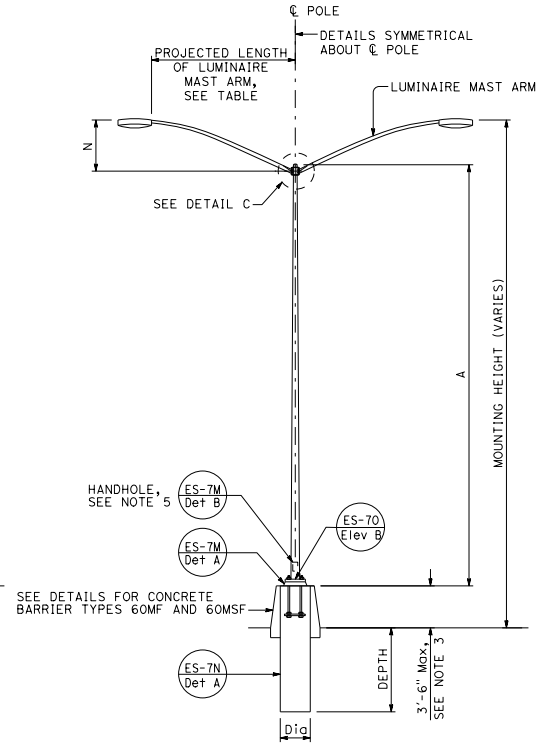

TYPE 15D AND TYPE 21D

MEDIAN BARRIER MOUNTED

ELEVATION B

LUMINAIRE MAST ARM DATA					
PROJECTED LENGTH	N RISE	Min OD AT POLE	NOMINAL THICKNESS	P	
				TYPE 15D	TYPE 21D
6'-0"	2'-0"±	3¼"	0.1196"	31'-6"±	36'-6"±
8'-0"	2'-6"±	3½"		32'-0"±	37'-0"±
10'-0"	3'-3"±	3⅞"		32'-9"±	37'-9"±
12'-0"	4'-3"±			33'-9"±	38'-9"±

POLE DATA					BASE PLATE DATA				CIDH PILE FOUNDATION	
POLE TYPE	A HEIGHT	Min OD BASE	Min OD TOP	Min THICKNESS	C	BC	THICKNESS	ANCHOR BOLT SIZE	Dia	DEPTH
15D	30'-0"	8"	3 11/16"	0.1793"	1'-0"	1'-0"	1½"	1¼" ø x 42"	2'-6"	7'-0"
21D	35'-0"	8⅝"								

NOTES:

1. ▭ Indicates mast arm length to be used unless otherwise noted on the plans.
2. For additional notes and details, see Standard Plans ES-7M and ES-7N.
3. CIDH footing shown. For trench footing at barrier, see Standard Plans A76BM, A76BN, A76BO, A76BP, A76BQ, and A76BR.
4. For locations with one arm, plug unused cap screw holes and chased outlet with galvanized cap screws and knockout plug.
5. Handhole shall be located perpendicular to the luminaire mast arm and as directed by the Engineer.

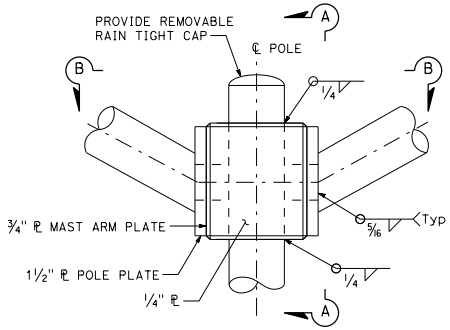

DETAIL C

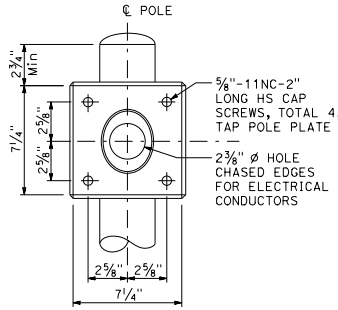

SECTION A-A

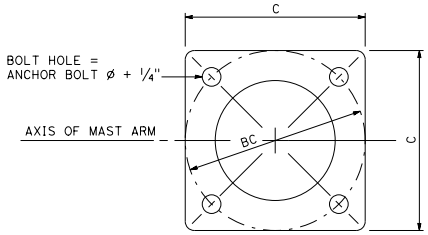

BASE PLATE

DETAIL B

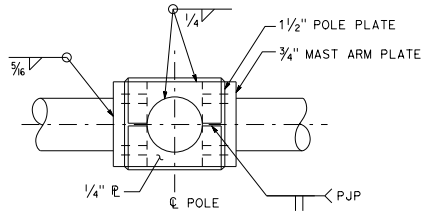

SECTION B-B

STATE OF CALIFORNIA
DEPARTMENT OF TRANSPORTATION

ELECTRICAL SYSTEMS (LIGHTING STANDARD, TYPES 15D AND 21D, DOUBLE LUMINAIRE MAST ARM)

NO SCALE

ES-6D

2026 STANDARD PLAN ES-6D

7-1-26

Return to Table of Contents

Dist	COUNTY	ROUTE	POST MILES TOTAL PROJECT	SHEET No.	TOTAL SHEETS

REGISTERED CIVIL ENGINEER

September 18, 2026

PLANS APPROVAL DATE

REGISTERED PROFESSIONAL ENGINEER Mahesh Shrestha No. C80133 Exp. 9-30-26 CIVIL STATE OF CALIFORNIA

THE STATE OF CALIFORNIA OR ITS OFFICERS OR AGENTS SHALL NOT BE RESPONSIBLE FOR THE ACCURACY OR COMPLETENESS OF SCANNED COPIES OF THIS PLAN SHEET.

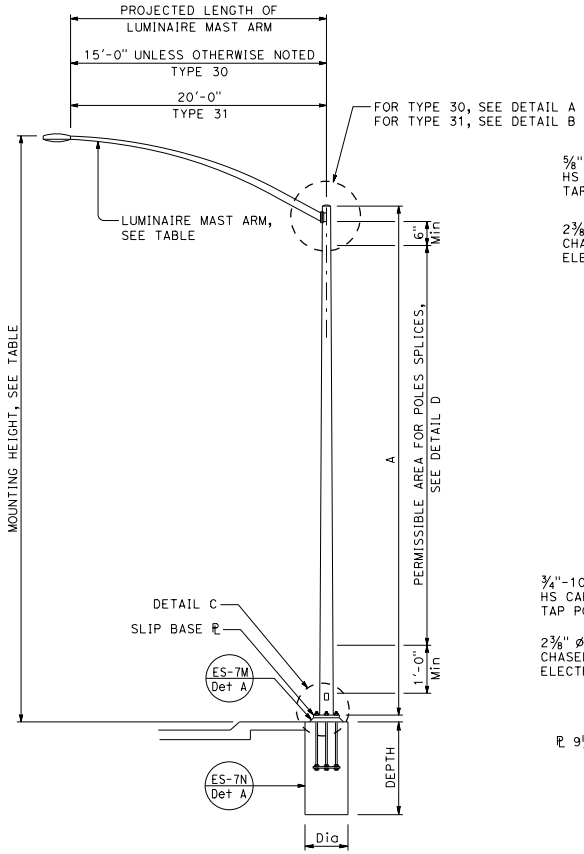

ELEVATION A

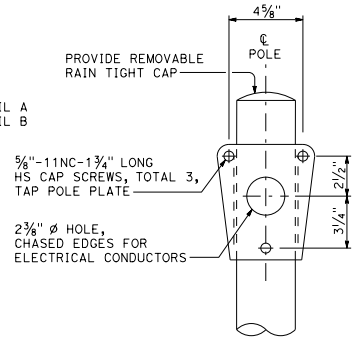

FRONT VIEW

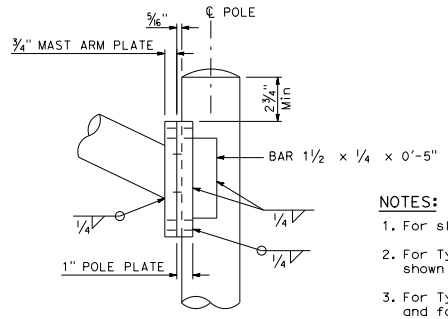

SIDE VIEW

TYPE 30

DETAIL A

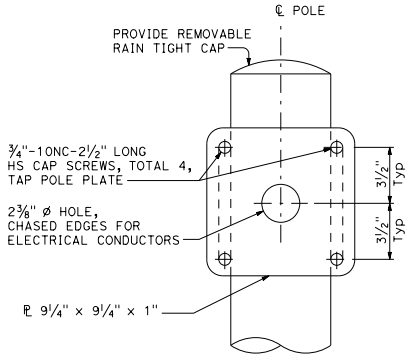

FRONT VIEW

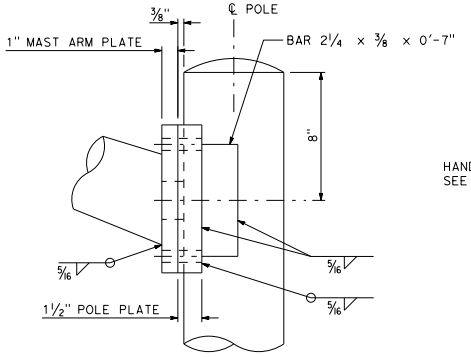

SIDE VIEW

TYPE 31

DETAIL B

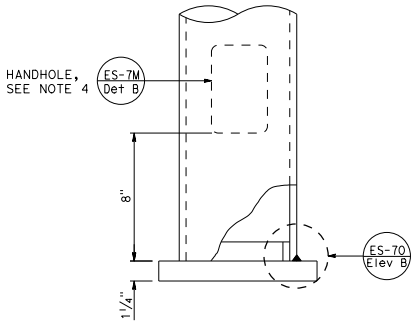

DETAIL C

NOTES:

1. For slip base plate details, see Standard Plan ES-6F.
2. For Type 30 fixed base, use Type 15 base plate and foundation shown on Standard Plan ES-6A. Use 1¼" ø x 3'-6" anchor bolts.
3. For Type 31 fixed base, use Type 32 base plate, anchor bolts and foundation on Standard Plan ES-6G.
4. Handhole shall be located on the downstream side of traffic.
5. For additional notes and details, see Standard Plans ES-7M and ES-7N.

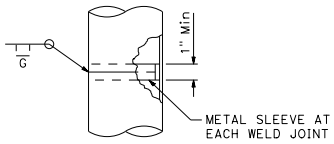

POLE SPLICE

DETAIL D

LUMINAIRE MAST ARM DATA			
PROJECTED LENGTH	THICKNESS	MINIMUM OD AT POLE	MOUNTING HEIGHT
* 6'-0"	0.1196"	3¼"	36'-9"±
* 8'-0"		3½"	37'-3"±
* 10'-0"		3⅜"	38'-0"±
* 12'-0"			39'-0"±
* 15'-0"		4¼"	39'-6"±
** 20'-0"	0.1793"	5"	37'-0"±

* TYPE 30
** TYPE 31

POLE DATA					CIDH PILE FOUNDATION	
POLE TYPE	A HEIGHT	Min OD BASE	Min OD TOP	Min THICKNESS	Dia	DEPTH
30	35'-0"	8¾"	3 11/16"	0.1196"	2'-6"	7'-0"
31		10¾"	5 11/16"	0.1793"	3'-0"	8'-0"

STATE OF CALIFORNIA
DEPARTMENT OF TRANSPORTATION

ELECTRICAL SYSTEMS (LIGHTING STANDARD, TYPES 30 AND 31)

NO SCALE

ES-6E

2026 STANDARD PLAN ES-6E

7-1-26

Return to Table of Contents

Dist	COUNTY	ROUTE	POST MILES TOTAL PROJECT	SHEET No.	TOTAL SHEETS

REGISTERED CIVIL ENGINEER

September 18, 2026

PLANS APPROVAL DATE

REGISTERED PROFESSIONAL ENGINEER — Mahesh Shrestha — No. C80133 — Exp. 9-30-26 — CIVIL — STATE OF CALIFORNIA

THE STATE OF CALIFORNIA OR ITS OFFICERS OR AGENTS SHALL NOT BE RESPONSIBLE FOR THE ACCURACY OR COMPLETENESS OF SCANNED COPIES OF THIS PLAN SHEET.

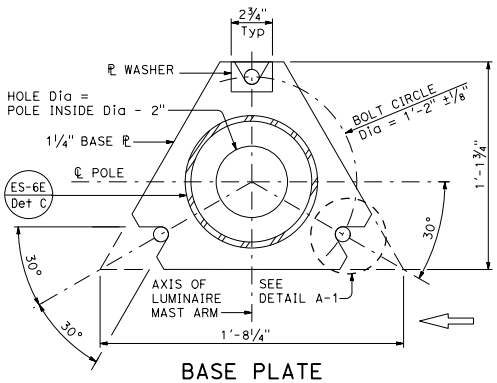

BASE PLATE
DETAIL A

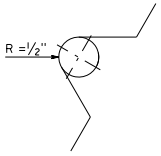

DETAIL A-1

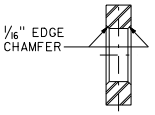

SECTION A-A

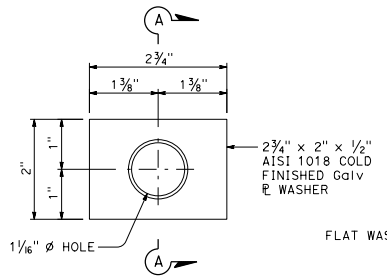

PLATE WASHER
DETAIL D

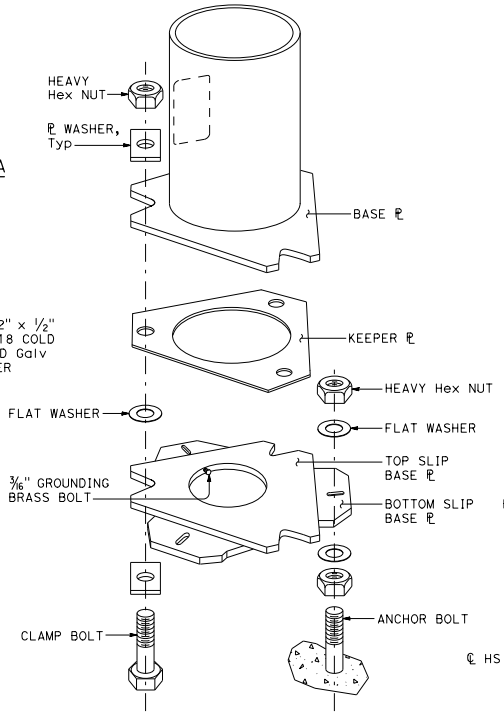

SLIP BASE DETAIL
DETAIL F

NOTES:

1. 1" Ø HS anchor bolts. For clamp bolts, see specifications.
2. Conduit shall not protrude more than 2" above top of foundation.
3. Handhole shall be located on the downstream side of traffic.
4. For Type 30 and Type 31 fixed base, see Notes 2 and 3 on Standard Plan ES-6E.

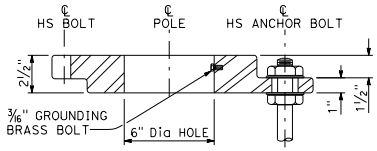

CAST OPTION

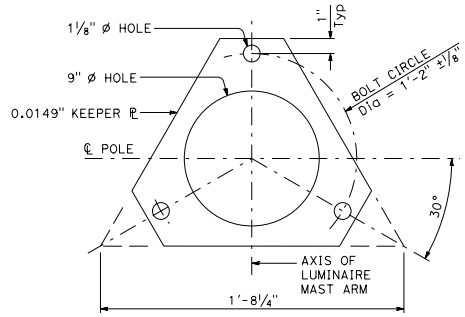

KEEPER PLATE
DETAIL B

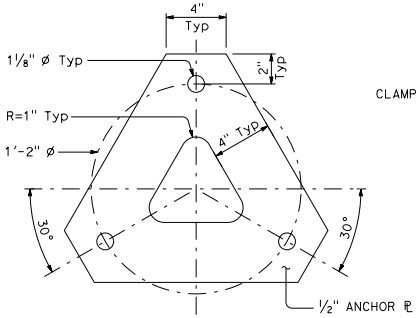

ANCHOR PLATE
DETAIL E

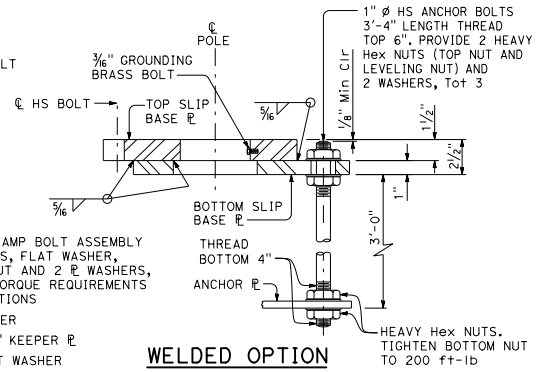

WELDED OPTION
SECTION B-B

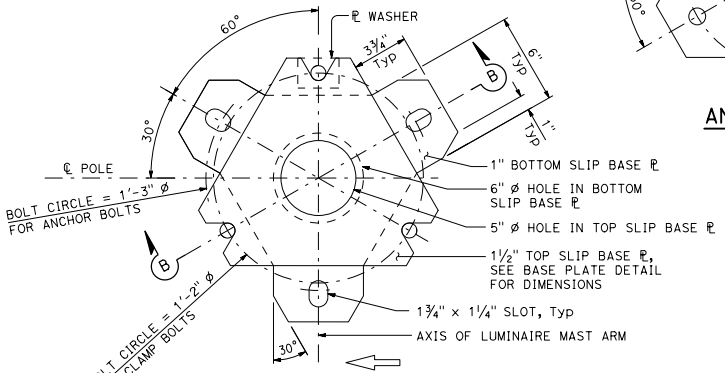

BOTTOM PLATE
DETAIL C

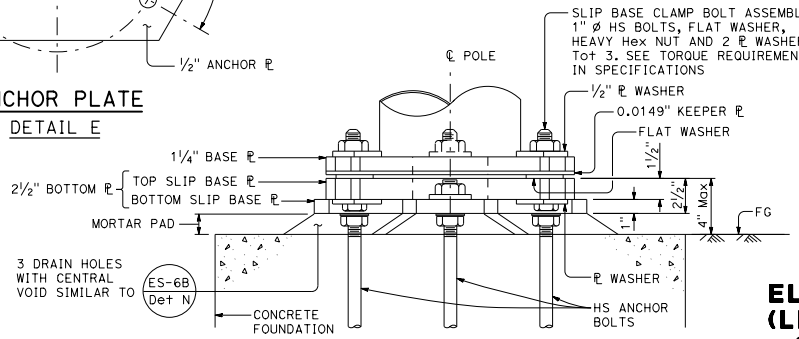

SLIP BASE
ELEVATION A

STATE OF CALIFORNIA
DEPARTMENT OF TRANSPORTATION

ELECTRICAL SYSTEMS (LIGHTING STANDARD, SLIP BASE PLATE)

NO SCALE

ES-6F

7-1-26

Return to Table of Contents

Dist	COUNTY	ROUTE	POST MILES TOTAL PROJECT	SHEET No.	TOTAL SHEETS

REGISTERED CIVIL ENGINEER

September 18, 2026

PLANS APPROVAL DATE

REGISTERED PROFESSIONAL ENGINEER Mahesh Shrestha No. C80133 Exp. 9-30-26 CIVIL STATE OF CALIFORNIA

THE STATE OF CALIFORNIA OR ITS OFFICERS OR AGENTS SHALL NOT BE RESPONSIBLE FOR THE ACCURACY OR COMPLETENESS OF SCANNED COPIES OF THIS PLAN SHEET.

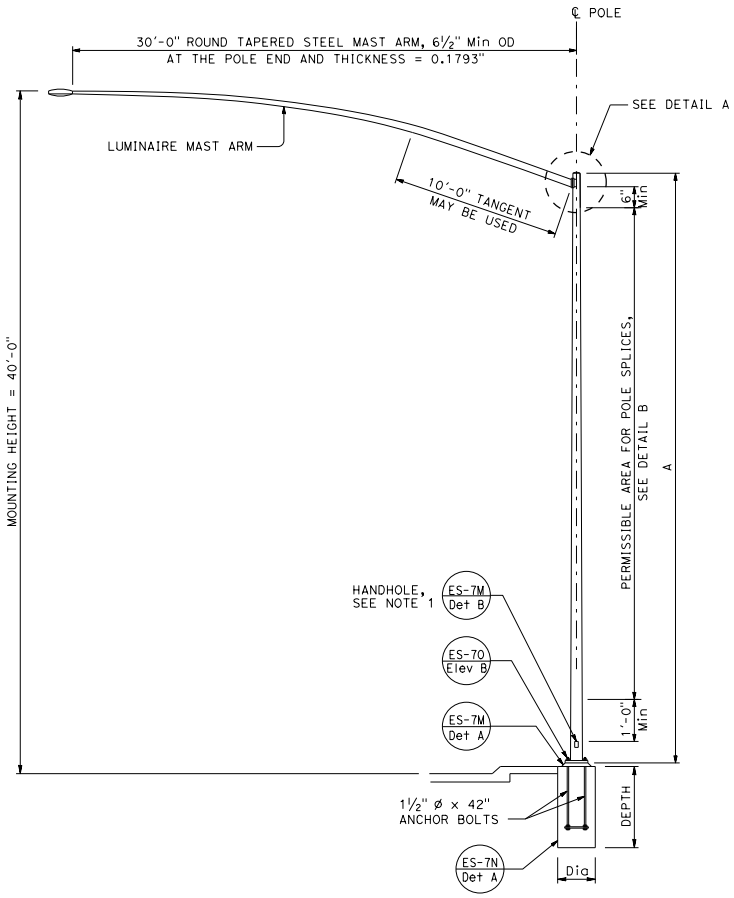

ELEVATION A

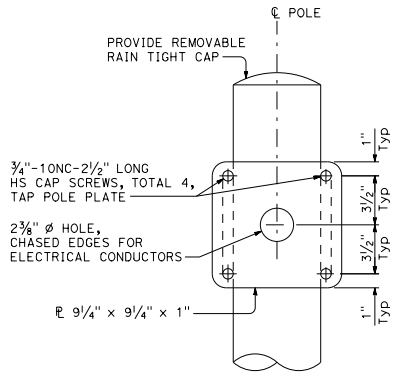

FRONT VIEW

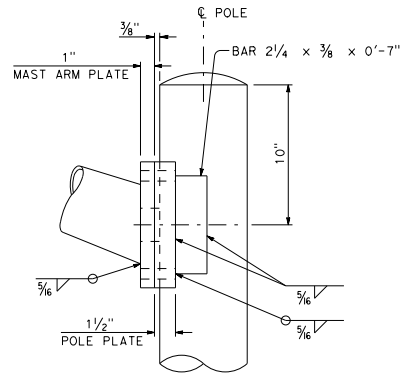

SIDE VIEW

DETAIL A

NOTES:

1. Handhole shall be located on the downstream side of traffic.
2. For additional notes and details, see Standard Plans ES-7M and ES-7N.

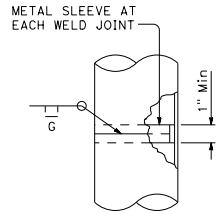

POLE SPLICE

DETAIL B

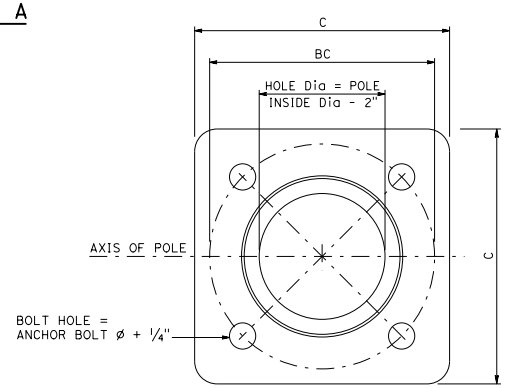

BASE PLATE DETAIL

DETAIL C

POLE DATA					BASE PLATE DATA				CIDH PILE FOUNDATION	
POLE TYPE	A HEIGHT	Min OD BASE	Min OD TOP	Min THICKNESS	C	BC	THICKNESS	ANCHOR BOLT SIZE	Dia	DEPTH
32	35'-0"	10¾"	5 11/16"	0.1793"	1'-5"	1'-3"	2"	1½" ø x 42"	3'-0"	8'-0"

STATE OF CALIFORNIA
DEPARTMENT OF TRANSPORTATION

ELECTRICAL SYSTEMS (LIGHTING STANDARD, TYPE 32)

NO SCALE

ES-6G

2026 STANDARD PLAN ES-6G

7-1-26

Return to Table of Contents

Dist	COUNTY	ROUTE	POST MILES TOTAL PROJECT	SHEET No.	TOTAL SHEETS

REGISTERED CIVIL ENGINEER

September 18, 2026

PLANS APPROVAL DATE

REGISTERED PROFESSIONAL ENGINEER Mahesh Shrestha No. C80133 Exp. 9-30-26 CIVIL STATE OF CALIFORNIA

THE STATE OF CALIFORNIA OR ITS OFFICERS OR AGENTS SHALL NOT BE RESPONSIBLE FOR THE ACCURACY OR COMPLETENESS OF SCANNED COPIES OF THIS PLAN SHEET.

POLE DATA					BASE PLATE DATA				CIDH
POLE TYPE	A HEIGHT	Min OD BASE	Min OD TOP	WALL THICKNESS	C	BC	THICKNESS	ANCHOR BOLT SIZE	DEPTH
15TS	30'-0"	8"	3 11/16"	0.1793"	1'-1 1/2"	1'-0"	2"	1 1/2" ø x 42"	7'-6"
21TS	35'-0"	9 3/8"	4 5/16"		1'-3"	1'-2"			8'-6"

NOTES:

1. For additional notes, details and data for Types 15TS and 21TS Standards, see Standard Plan ES-6A.
2. Handhole shall be located on the downstream side of traffic.

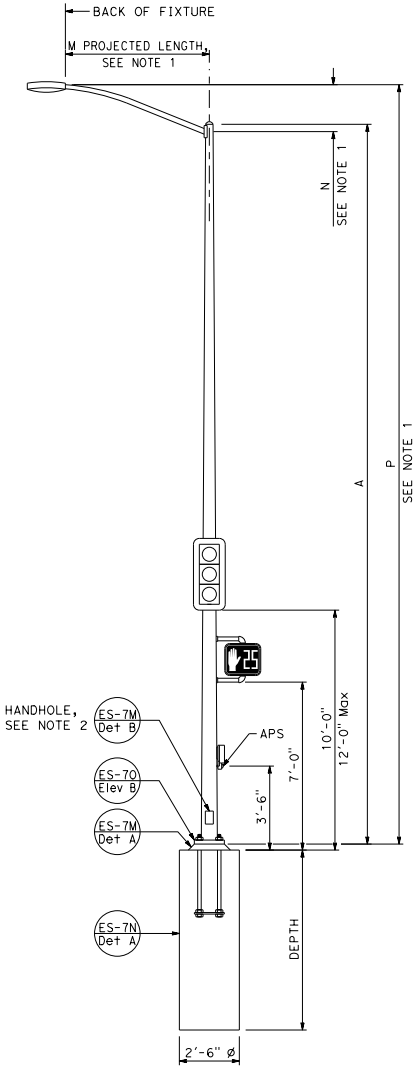

ELEVATION A

TYPES 15TS AND 21TS STANDARD

See Note 1

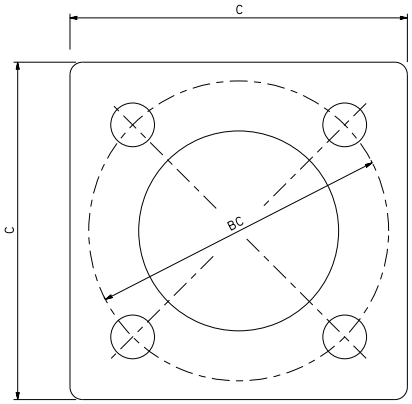

BASE PLATE

TYPE 15TS AND 21TS

DETAIL A

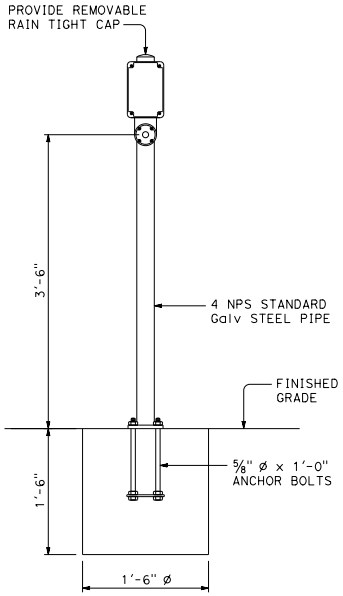

ELEVATION

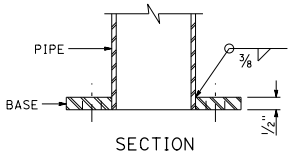

SECTION

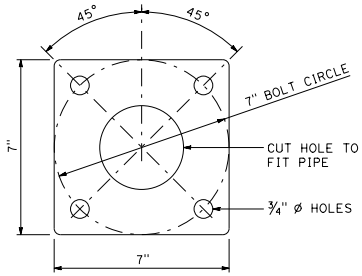

BASE PLATE

TYPE 2 POST

DETAIL B

STATE OF CALIFORNIA
DEPARTMENT OF TRANSPORTATION

ELECTRICAL SYSTEMS (SIGNAL AND LIGHTING STANDARD, TYPE TS, AND TYPE 2 POST)

NO SCALE

ES-7A

2026 STANDARD PLAN ES-7A

7-1-26

Return to Table of Contents

Dist	COUNTY	ROUTE	POST MILES TOTAL PROJECT	SHEET No.	TOTAL SHEETS

REGISTERED CIVIL ENGINEER

September 18, 2026
PLANS APPROVAL DATE

REGISTERED PROFESSIONAL ENGINEER — Mahesh Shrestha — No. C80133 — Exp. 9-30-26 — CIVIL — STATE OF CALIFORNIA

THE STATE OF CALIFORNIA OR ITS OFFICERS OR AGENTS SHALL NOT BE RESPONSIBLE FOR THE ACCURACY OR COMPLETENESS OF SCANNED COPIES OF THIS PLAN SHEET.

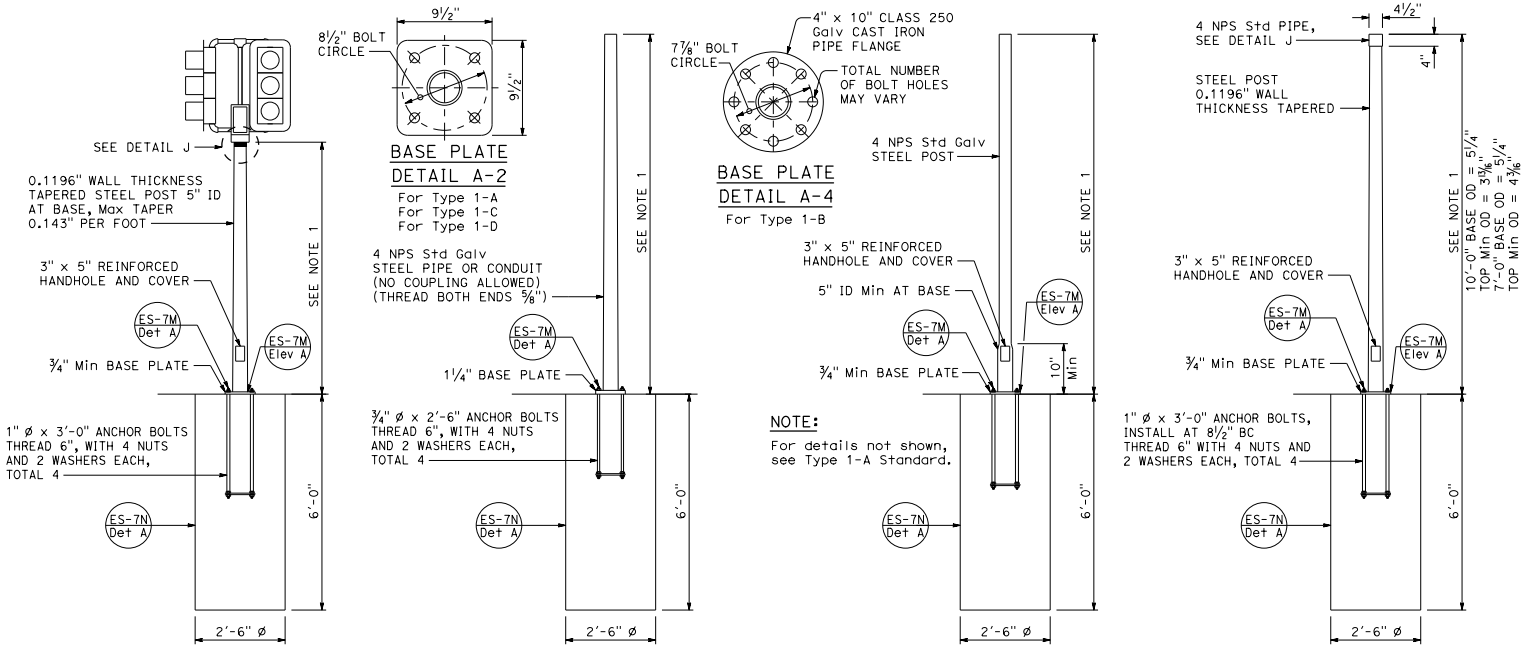

TYPE 1 SIGNAL STANDARDS
DETAIL A

NOTES:

1. Standards shall be 12'-0" ±2" for flashing beacons, 10'-0" ±2" for vehicle signals, and 7'-0" ±2" for pedestrian signals unless shorter pole is noted on project plans.
2. Top of standards shall be 4½" OD.
3. Conduits shall extend 2" maximum above finished surface of foundation and for Types 1-A, 1-C, and 1-D shall be sloped toward handhole.
4. Coupling nuts to be used only when shown or specified on project plans.
5. Handholes shall be located on the downstream side of traffic.

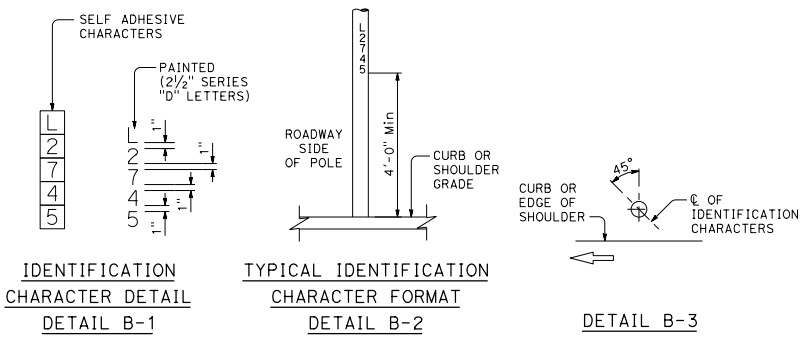

LOCATION OF EQUIPMENT IDENTIFICATION CHARACTERS ON STANDARDS AND POSTS
DETAIL B

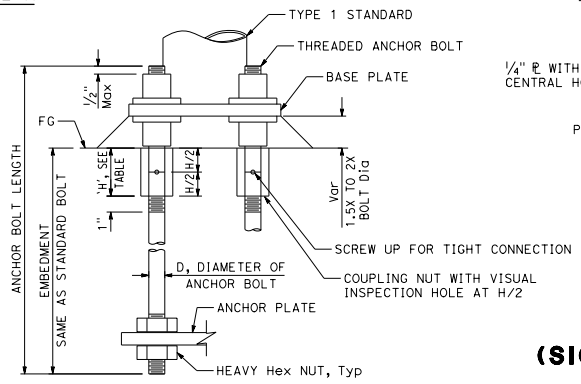

ANCHOR BOLTS WITH COUPLING NUTS
DETAIL C
See Note 4

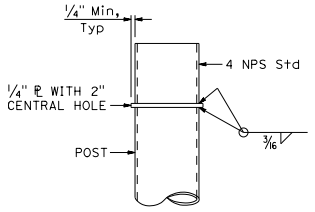

DETAIL J

COUPLING NUT TABLE	
BOLT DIAMETER	NUT TABLE THICKNESS 'H'
¾"	2¼"
1"	3"

STATE OF CALIFORNIA
DEPARTMENT OF TRANSPORTATION

ELECTRICAL SYSTEMS (SIGNAL AND LIGHTING STANDARD, TYPE 1 AND EQUIPMENT IDENTIFICATION CHARACTERS)

NO SCALE

ES-7B

2026 STANDARD PLAN ES-7B

7-1-26

Return to Table of Contents

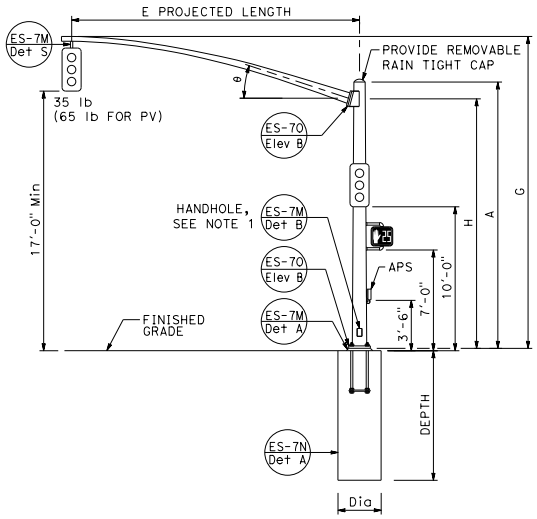

TYPE 16-1-100, 18-1-100

ELEVATION A

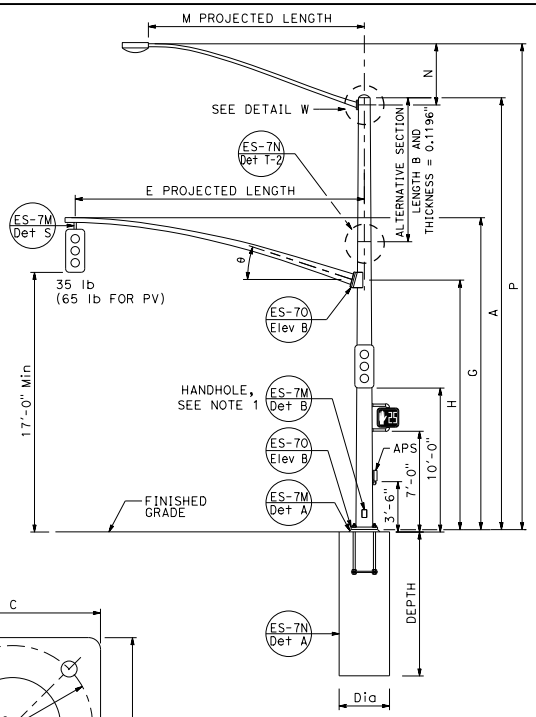

TYPE 19-1-100, 19A-1-100

ELEVATION B

NOTES:

1. Handhole shall be located on the downstream side of traffic.
2. Δ = Luminaire mast arm skew -90° or +90°, default 0°.

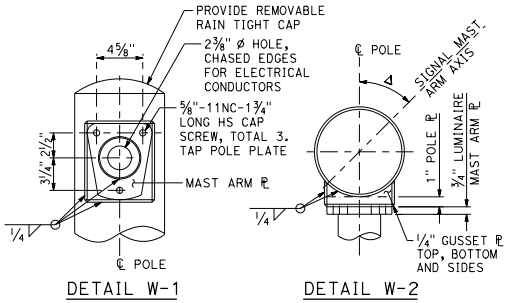

DETAIL W-1 DETAIL W-2

LUMINAIRE MAST ARM CONNECTION

DETAIL W

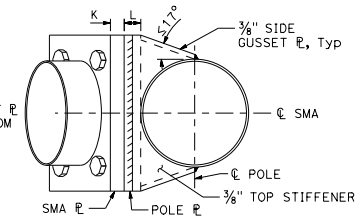

SECTION B-B

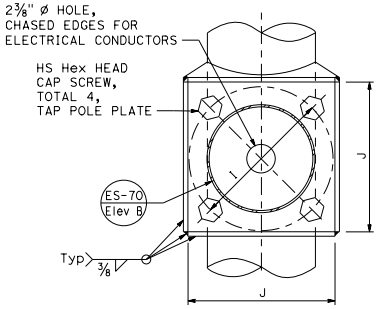

SECTION A-A

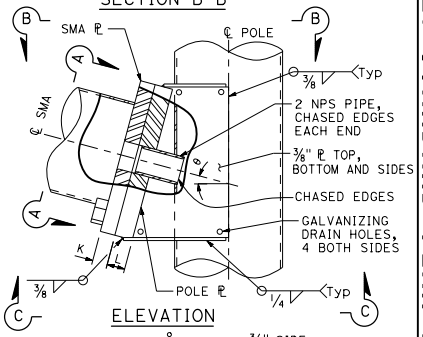

ELEVATION

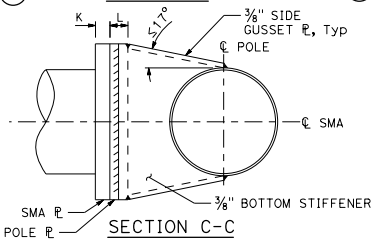

SECTION C-C

SIGNAL MAST ARM CONNECTION

DETAIL A

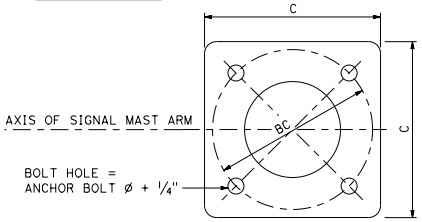

BASE PLATE

DETAIL D

SIGNAL MAST ARM DATA										
E PROJECTED LENGTH	G MOUNTING HEIGHT	H	Min OD AT POLE	THICKNESS	I BOLT CIRCLE	HS CAP SCREWS	J PLATE SIZE	K MAST ARM ℄ THICKNESS	L POLE ℄ THICKNESS	θ
15'-0"	21'-8"±	17'-6"	7⅜"	0.1793"	12"	1¼"-7NC-3"	1'-0"	1¼"	1½"	23°
20'-0"			8"				1'-1"			
25'-0"	22'-8"±	16'-0"	9"							
30'-0"	23'-0"±		10"							

LUMINAIRE MAST ARM DATA					
M PROJECTED LENGTH	N RISE	Min OD AT POLE	THICKNESS	P MOUNTING HEIGHT 30'-0" POLE	P MOUNTING HEIGHT 35'-0" POLE
6'-0"	2'-0"±	3¼"	0.1196"	31'-6"±	36'-6"±
8'-0"	2'-6"±	3½"		32'-0"±	37'-0"±
10'-0"	3'-3"±	3⅞"		32'-9"±	37'-9"±
12'-0"	4'-3"±			33'-9"±	38'-9"±
15'-0"	4'-9"±	4¼"		34'-3"±	39'-3"±

POLE TYPE	LOAD CASE	WIND VELOCITY (mph)	POLE DATA: A HEIGHT	Min OD BASE	Min OD TOP	THICKNESS	ALTERNATIVE SECTION B LENGTH	ALTERNATIVE SECTION BOTTOM	ALTERNATIVE SECTION TOP	BASE PLATE DATA: C	BC	THICKNESS	ANCHOR BOLT SIZE	LUMINAIRE MAST ARM	SIGNAL MAST ARM	CIDH PILE FOUNDATION Dia	CIDH PILE FOUNDATION DEPTH
16-1-100	1	100	18'-6"	12"	9⅜"	0.2391" OR 0.25"	None			1'-6"	1'-4"	2"	1¾"ø × 42"	NONE	15'-0", [20'-0"]	3'-0"	9'-0"
18-1-100			17'-0"				None							NONE			
19-1-100			30'-0"	14"	9¾"		10'-0"	11⅛"	9¾"	1'-10"	1'-8"	2½"	2"ø × 42"	6'-15' [12'-0"]	25'-0", [30'-0"]	3'-6"	10'-0"
19A-1-100			35'-0"		9"		15'-0"		9"					6'-15' [15'-0"]			

[ ] INDICATES MAST ARM LENGTH TO BE USED UNLESS OTHERWISE NOTED ON PLANS.

STATE OF CALIFORNIA
DEPARTMENT OF TRANSPORTATION

ELECTRICAL SYSTEMS (SIGNAL AND LIGHTING STANDARD, CASE 1 SIGNAL MAST ARM LOADING, WIND VELOCITY = 100 MPH AND SIGNAL MAST ARM LENGTHS 15' TO 30')

NO SCALE

Dist	COUNTY	ROUTE	POST MILES TOTAL PROJECT	SHEET No.	TOTAL SHEETS

REGISTERED CIVIL ENGINEER

September 18, 2026

PLANS APPROVAL DATE

Mahesh Shrestha No. C80133 Exp. 9-30-26 CIVIL STATE OF CALIFORNIA REGISTERED PROFESSIONAL ENGINEER

THE STATE OF CALIFORNIA OR ITS OFFICERS OR AGENTS SHALL NOT BE RESPONSIBLE FOR THE ACCURACY OR COMPLETENESS OF SCANNED COPIES OF THIS PLAN SHEET.

ES-7C

7-1-26

Return to Table of Contents

Dist	COUNTY	ROUTE	POST MILES TOTAL PROJECT	SHEET No.	TOTAL SHEETS

REGISTERED CIVIL ENGINEER

September 18, 2026

PLANS APPROVAL DATE

REGISTERED PROFESSIONAL ENGINEER Mahesh Shrestha No. C80133 Exp. 9-30-26 CIVIL STATE OF CALIFORNIA

THE STATE OF CALIFORNIA OR ITS OFFICERS OR AGENTS SHALL NOT BE RESPONSIBLE FOR THE ACCURACY OR COMPLETENESS OF SCANNED COPIES OF THIS PLAN SHEET.

NOTE:

1. Handhole shall be located on the downstream side of traffic.

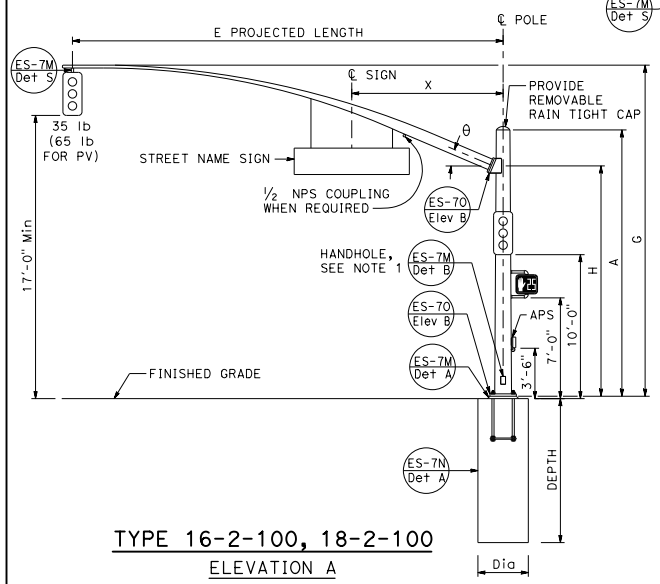

TYPE 16-2-100, 18-2-100

ELEVATION A

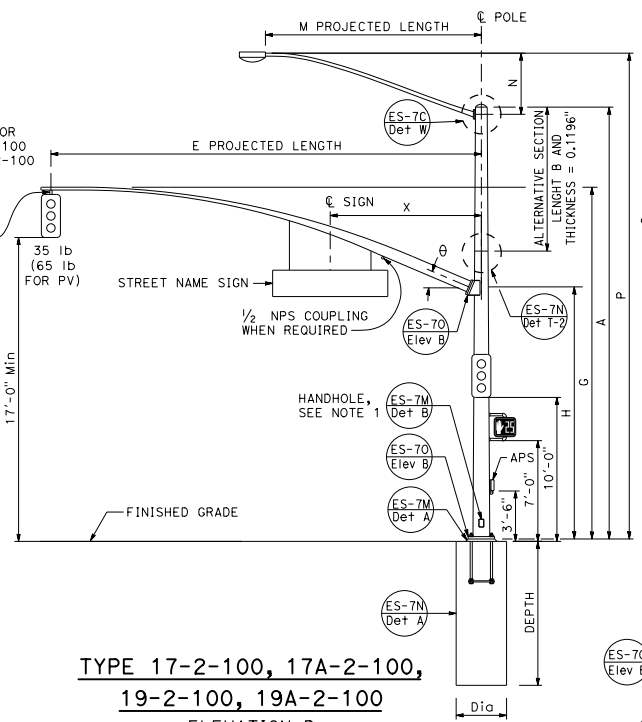

TYPE 17-2-100, 17A-2-100, 19-2-100, 19A-2-100

ELEVATION B

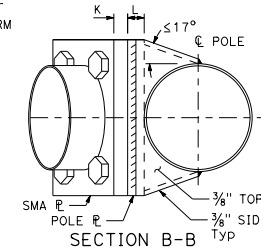

BASE PLATE

DETAIL B

SECTION B-B

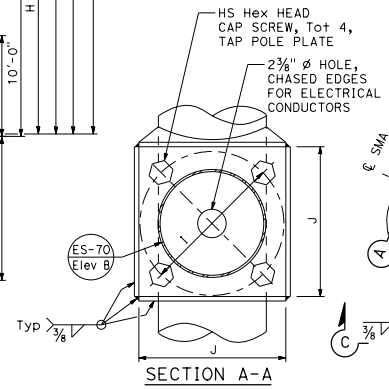

SECTION A-A

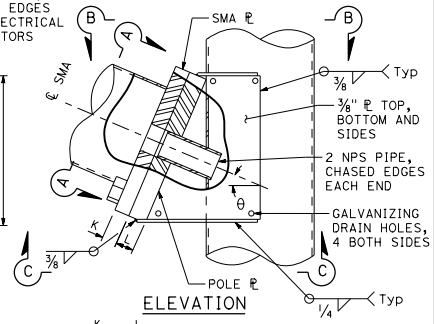

ELEVATION

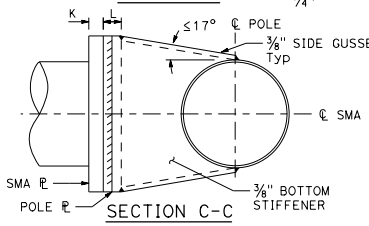

SECTION C-C

SIGNAL MAST ARM CONNECTION

DETAIL A

STATE OF CALIFORNIA
DEPARTMENT OF TRANSPORTATION

ELECTRICAL SYSTEMS (SIGNAL AND LIGHTING STANDARD, CASE 2 SIGNAL MAST ARM LOADING, WIND VELOCITY = 100 MPH AND SIGNAL MAST ARM LENGTHS 15' TO 30')

NO SCALE

SIGNAL MAST ARM DATA

E PROJECTED LENGTH	G MOUNTING HEIGHT	H	Min OD AT POLE	THICKNESS	I BOLT CIRCLE	HS CAP SCREWS	J PLATE SIZE	K MAST ARM ℙ THICKNESS	L POLE ℙ THICKNESS	θ	X Max
15'-0"	21'-8"±	17'-6"	7⅜"	0.1793"	12"	1¼"-7NC-3"	1'-1"	1¼"	1½"	23°	10'-6"
20'-0"			8"								
25'-0"	22'-8"±	16'-0"	9"				1'-3"				
30'-0"	23'-0"±		10"	0.2391"							

LUMINAIRE MAST ARM DATA

M PROJECTED LENGTH	N RISE	Min OD AT POLE	THICKNESS	P MOUNTING HEIGHT 30'-0" POLE	P MOUNTING HEIGHT 35'-0" POLE
6'-0"	2'-0"±	3¼"	0.1196"	31'-6"±	36'-6"±
8'-0"	2'-6"±	3½"		32'-0"±	37'-0"±
10'-0"	3'-3"±	3⅞"		32'-9"±	37'-9"±
12'-0"	4'-3"±			33'-9"±	38'-9"±
15'-0"	4'-9"±	4¼"		34'-3"±	39'-3"±

POLE DATA / BASE PLATE DATA / CIDH PILE FOUNDATION

POLE TYPE	LOAD CASE	WIND VELOCITY (mph)	A HEIGHT	Min OD BASE	Min OD TOP	THICKNESS	ALTERNATIVE SECTION B LENGTH	ALTERNATIVE SECTION BOTTOM	ALTERNATIVE SECTION TOP	C	BC	THICKNESS	ANCHOR BOLT SIZE	LUMINAIRE MAST ARM	SIGNAL MAST ARM	CIDH PILE FOUNDATION Dia	CIDH PILE FOUNDATION DEPTH
16-2-100	2	100	18'-6"	14"	11⅜"	0.2391" OR 0.25"				1'-10"	1'-8"	2½"	2" ø x 42"	NONE	15'-0", [20'-0"]	3'-6"	10'-0"
17-2-100			30'-0"		9¾"		10'-0"	11⅛"	9¾"					6'-15' [12'-0"]			
17A-2-100			35'-0"		9"		15'-0"		9"					6'-15' [15'-0"]			
18-2-100			17'-0"		11⅝"									NONE	25'-0", [30'-0"]		12'-0"
19-2-100			30'-0"		9¾"		10'-0"	11⅛"	9¾"					6'-15' [12'-0"]			
19A-2-100			35'-0"	16"	11"		15'-0"	13⅛"	11"	1'-11"	1'-9"	3"	2¼" ø x 42"	6'-15' [15'-0"]			

[ ] INDICATES MAST ARM LENGTH TO BE USED UNLESS OTHERWISE NOTED ON PLANS.

ES-7D

7-1-26

2026 STANDARD PLAN ES-7D

Return to Table of Contents

Dist	COUNTY	ROUTE	POST MILES TOTAL PROJECT	SHEET No.	TOTAL SHEETS

REGISTERED CIVIL ENGINEER

September 18, 2026

PLANS APPROVAL DATE

REGISTERED PROFESSIONAL ENGINEER — Mahesh Shrestha — No. C80133 — Exp. 9-30-26 — CIVIL — STATE OF CALIFORNIA

THE STATE OF CALIFORNIA OR ITS OFFICERS OR AGENTS SHALL NOT BE RESPONSIBLE FOR THE ACCURACY OR COMPLETENESS OF SCANNED COPIES OF THIS PLAN SHEET.

NOTE:

1. Handhole shall be located on the downstream side of traffic.

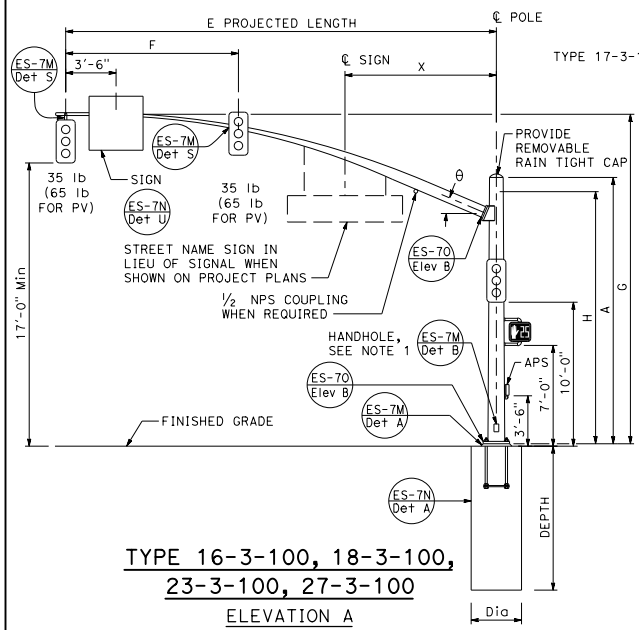

TYPE 16-3-100, 18-3-100, 23-3-100, 27-3-100

ELEVATION A

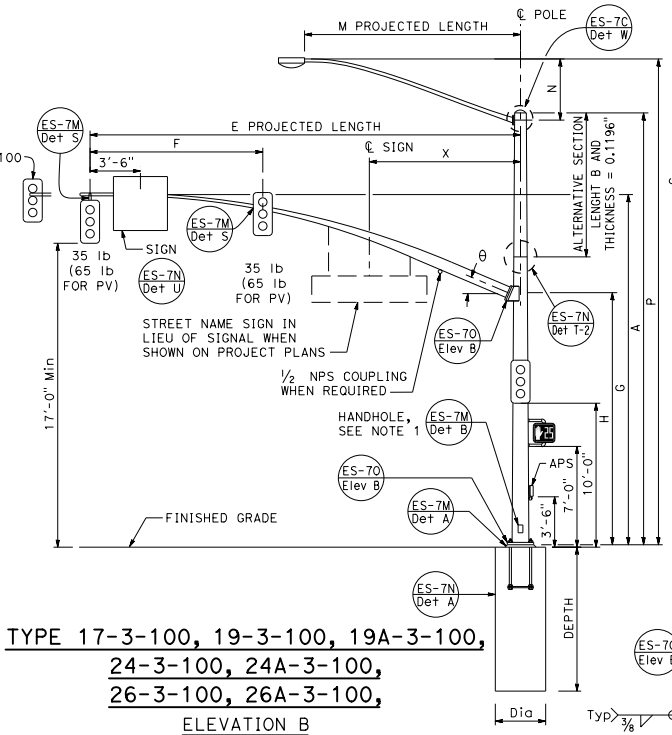

TYPE 17-3-100, 19-3-100, 19A-3-100, 24-3-100, 24A-3-100, 26-3-100, 26A-3-100,

ELEVATION B

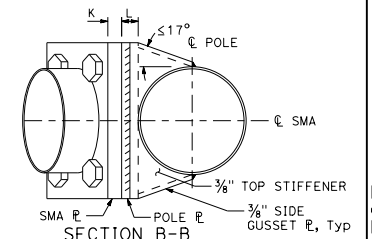

BASE PLATE

DETAIL B

SECTION B-B

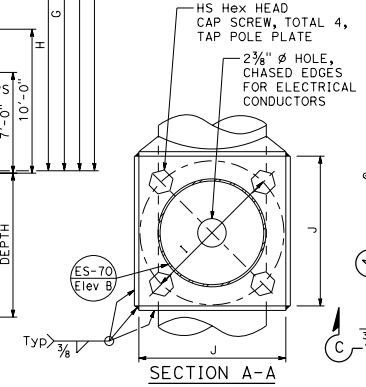

SECTION A-A

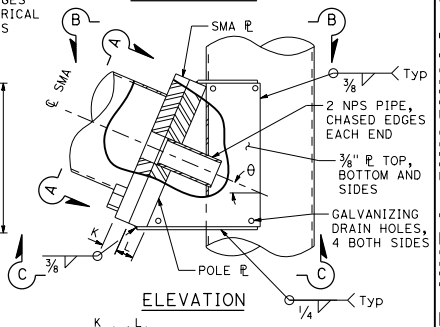

ELEVATION

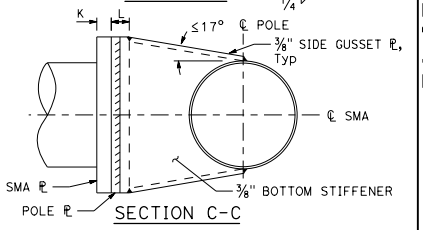

SECTION C-C

SIGNAL MAST ARM CONNECTION

DETAIL A

STATE OF CALIFORNIA
DEPARTMENT OF TRANSPORTATION

ELECTRICAL SYSTEMS (SIGNAL AND LIGHTING STANDARD, CASE 3 SIGNAL MAST ARM LOADING, WIND VELOCITY = 100 MPH AND SIGNAL MAST ARM LENGTHS 15' TO 45')

NO SCALE

ES-7E

SIGNAL MAST ARM DATA

E PROJECTED LENGTH	F Min SPACING	G MOUNTING HEIGHT	H	Min OD AT POLE	THICKNESS	I BOLT CIRCLE	HS CAP SCREWS	J PLATE SIZE	K MAST ARM ℙ THICKNESS	L POLE ℙ THICKNESS	θ	X Max
15'-0"	8'-0"	21'-8"±	17'-6"	7⅜"	0.1793"	12"	1¼"-7NC-3"	1'-3"	1¼"	1½"	23°	-
20'-0"		21'-8"±		7⅜"								10'-6"
25'-0"	12'-0"	22'-8"±	16'-0"	7⅜"	0.2391"							
30'-0"				8"								
35'-0"	14'-0"	23'-0"±		8¾"		13"			1½"	1¾"	21°	
40'-0"	15'-0"			9⅜"							15°	13'-0"
45'-0"		23'-8"±		10 1/16"				1'-5"				

LUMINAIRE MAST ARM DATA

M PROJECTED LENGTH	N RISE	Min OD AT POLE	THICKNESS	P MOUNTING HEIGHT 30'-0" POLE	P MOUNTING HEIGHT 35'-0" POLE
6'-0"	2'-0"±	3¼"	0.1196"	31'-6"±	36'-6"±
8'-0"	2'-6"±	3½"		32'-0"±	37'-0"±
10'-0"	3'-3"±	3⅞"		32'-9"±	37'-9"±
12'-0"	4'-3"±			33'-9"±	38'-9"±
15'-0"	4'-9"±	4¼"		34'-3"±	39'-3"±

POLE DATA / BASE PLATE DATA / CIDH PILE FOUNDATION

POLE TYPE	LOAD CASE	WIND VELOCITY (mph)	A HEIGHT	Min OD BASE	Min OD TOP	THICKNESS	ALTERNATIVE SECTION B LENGTH	ALTERNATIVE SECTION BOTTOM	ALTERNATIVE SECTION TOP	C	BC	THICKNESS	ANCHOR BOLT SIZE	LUMINAIRE MAST ARM	SIGNAL MAST ARM	CIDH PILE FOUNDATION Dia	CIDH PILE FOUNDATION DEPTH
16-3-100	3	100	18'-6"	16"	13⅜"	0.2391" OR 0.25"				1'-11"	1'-9"	3"	2¼" ø x 42"	NONE	15'-0", 20'-0"	3'-6"	12'-0"
17-3-100			30'-0"		11¾"		10'-0"	13⅛"	11¾"					6'-15' 12'-0"			
18-3-100			17'-0"		13⅝"									NONE	25'-0", 30'-0"		
19-3-100			30'-0"		11¾"		10'-0"	13⅛"	11¾"					6'-15' 12'-0"			
19A-3-100			35'-0"		11"	0.3125"	15'-0"		11"					6'-15' 15'-0"			
23-3-100			17'-0"		13⅝"	0.2391" OR 0.25"								NONE	35'-0"		
24-3-100			30'-0"		11¾"		10'-0"	13⅛"	11¾"					6'-15' 12'-0"			
24A-3-100			35'-0"		11"	0.3125"	15'-0"		11"					6'-15' 15'-0"			
26-3-100			30'-0"	18"	13¾"		10'-0"	15⅛"	13¾"	2'-1"	1'-11"			6'-15' 12'-0"	40'-0", 45'-0"		13'-0"
26A-3-100			35'-0"		13"		15'-0"		13"					6'-15' 15'-0"			
27-3-100			17'-0"		15⅝"									NONE			

☐ INDICATES MAST ARM LENGTH TO BE USED UNLESS OTHERWISE NOTED ON PLANS.

7-1-26

Return to Table of Contents

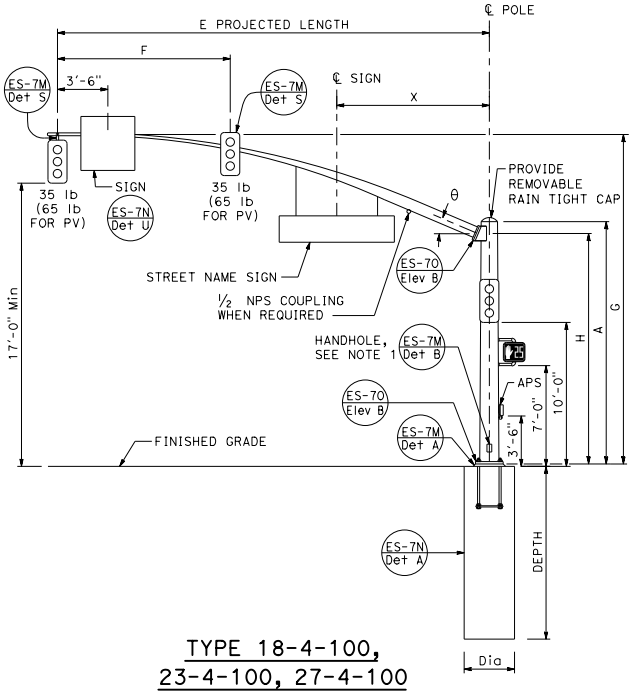

TYPE 18-4-100, 23-4-100, 27-4-100

ELEVATION A

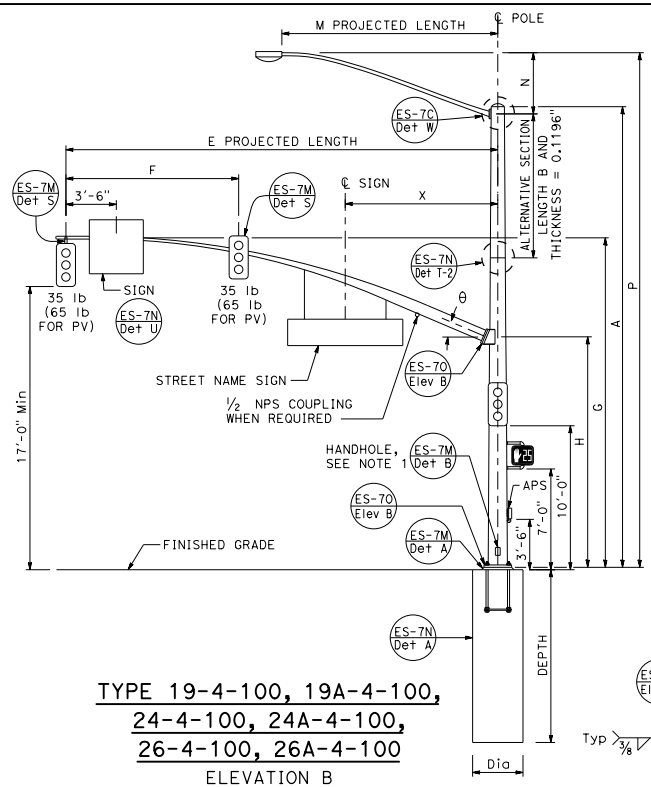

TYPE 19-4-100, 19A-4-100, 24-4-100, 24A-4-100, 26-4-100, 26A-4-100

ELEVATION B

NOTE:

1. Handhole shall be located on the downstream side of traffic.

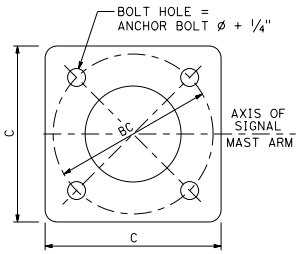

BASE PLATE

DETAIL B

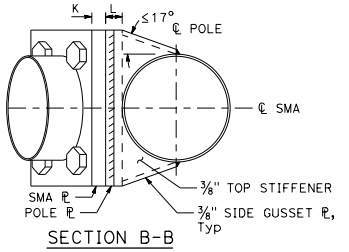

SECTION B-B

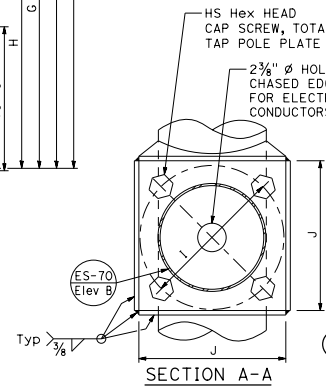

SECTION A-A

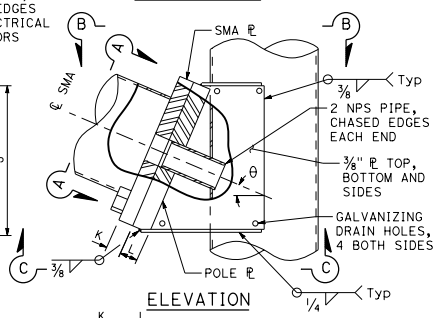

ELEVATION

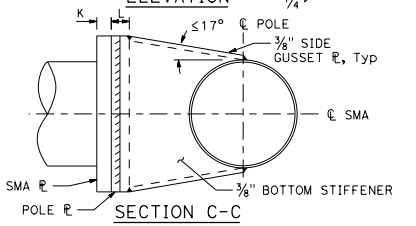

SECTION C-C

SIGNAL MAST ARM CONNECTION

DETAIL A

SIGNAL MAST ARM DATA												
E PROJECTED LENGTH	F Min SPACING	G MOUNTING HEIGHT	H	Min OD AT POLE	THICKNESS	I BOLT CIRCLE	HS CAP SCREWS	J PLATE SIZE	K MAST ARM ℙ THICKNESS	L POLE ℙ THICKNESS	θ	X Max
25'-0"	10'-0"	22'-8"±	16'-0"	7⅜"	0.2391"	12"	1¼"-7NC-3"	1'-3"	1¼"	1½"	23°	10'-6"
30'-0"	12'-0"	23'-0"±		8"								
35'-0"	14'-0"			8 11/16"		13½"			1½"	1¾"	21°	
40'-0"	15'-0"			9⅜"							15°	13'-0"
45'-0"		23'-8"±		10¼"				1'-5"				

LUMINAIRE MAST ARM DATA					
M PROJECTED LENGTH	N RISE	Min OD AT POLE	THICKNESS	P MOUNTING HEIGHT 30'-0" POLE	P MOUNTING HEIGHT 35'-0" POLE
6'-0"	2'-0"±	3¼"	0.1196"	31'-6"±	36'-6"±
8'-0"	2'-6"±	3½"		32'-0"±	37'-0"±
10'-0"	3'-3"±	3⅞"		32'-9"±	37'-9"±
12'-0"	4'-3"±			33'-9"±	38'-9"±
15'-0"	4'-9"±	4¼"		34'-3"±	39'-3"±

POLE TYPE	LOAD CASE	WIND VELOCITY (mph)	POLE DATA: A HEIGHT	Min OD BASE	Min OD TOP	THICKNESS	ALTERNATIVE SECTION B LENGTH	ALTERNATIVE SECTION BOTTOM	ALTERNATIVE SECTION TOP	BASE PLATE DATA: C	BC	THICKNESS	ANCHOR BOLT SIZE	LUMINAIRE MAST ARM	SIGNAL MAST ARM	CIDH PILE FOUNDATION Dia	CIDH PILE FOUNDATION DEPTH
18-4-100	4	100	17'-0"	16"	13⅝"	0.2391" OR 0.25"				1'-11"	1'-9"	3"	2¼" ø x 42"	NONE	25'-0", 30'-0"	3'-6"	12'-0"
19-4-100			30'-0"		11¾"		10'-0"	13⅛"	11¾"					6'-15' 12'-0"			
19A-4-100			35'-0"		11"		15'-0'	13⅛"	11"					6'-15' 15'-0"			
23-4-100			17'-0"		13⅝"	0.3125"								NONE	35'-0"		
24-4-100			30'-0"		11¾"		10'-0"	15⅛"	13¾"					6'-15' 12'-0"			
24A-4-100			35'-0"		11"		15'-0"	13⅛"	11"					6'-15' 15'-0"			
26-4-100			30'-0"	18"	13¾"		10'-0"	15⅛"	13¾"	2'-1"	1'-11"			6'-15' 12'-0"	40'-0", 45'-0"		13'-0"
26A-4-100			35'-0"		13"		15'-0"	15⅛"	13"					6'-15' 15'-0"			
27-4-100			17'-0"		15⅝"									NONE			

INDICATES MAST ARM LENGTH TO BE USED UNLESS OTHERWISE NOTED ON PLANS.

Dist	COUNTY	ROUTE	POST MILES TOTAL PROJECT	SHEET No.	TOTAL SHEETS

REGISTERED CIVIL ENGINEER

September 18, 2026

PLANS APPROVAL DATE

REGISTERED PROFESSIONAL ENGINEER Mahesh Shrestha No. C80133 Exp. 9-30-26 CIVIL STATE OF CALIFORNIA

THE STATE OF CALIFORNIA OR ITS OFFICERS OR AGENTS SHALL NOT BE RESPONSIBLE FOR THE ACCURACY OR COMPLETENESS OF SCANNED COPIES OF THIS PLAN SHEET.

STATE OF CALIFORNIA
DEPARTMENT OF TRANSPORTATION

ELECTRICAL SYSTEMS (SIGNAL AND LIGHTING STANDARD, CASE 4 SIGNAL MAST ARM LOADING, WIND VELOCITY = 100 MPH AND SIGNAL MAST ARM LENGTHS 25' TO 45')

NO SCALE

ES-7F

7-1-26

Return to Table of Contents

Dist	COUNTY	ROUTE	POST MILES TOTAL PROJECT	SHEET No.	TOTAL SHEETS

REGISTERED CIVIL ENGINEER

September 18, 2026

PLANS APPROVAL DATE

REGISTERED PROFESSIONAL ENGINEER — Mahesh Shrestha — No. C80133 — Exp. 9-30-26 — CIVIL — STATE OF CALIFORNIA

THE STATE OF CALIFORNIA OR ITS OFFICERS OR AGENTS SHALL NOT BE RESPONSIBLE FOR THE ACCURACY OR COMPLETENESS OF SCANNED COPIES OF THIS PLAN SHEET.

NOTE:

1. Handhole shall be located on the downstream side of traffic.

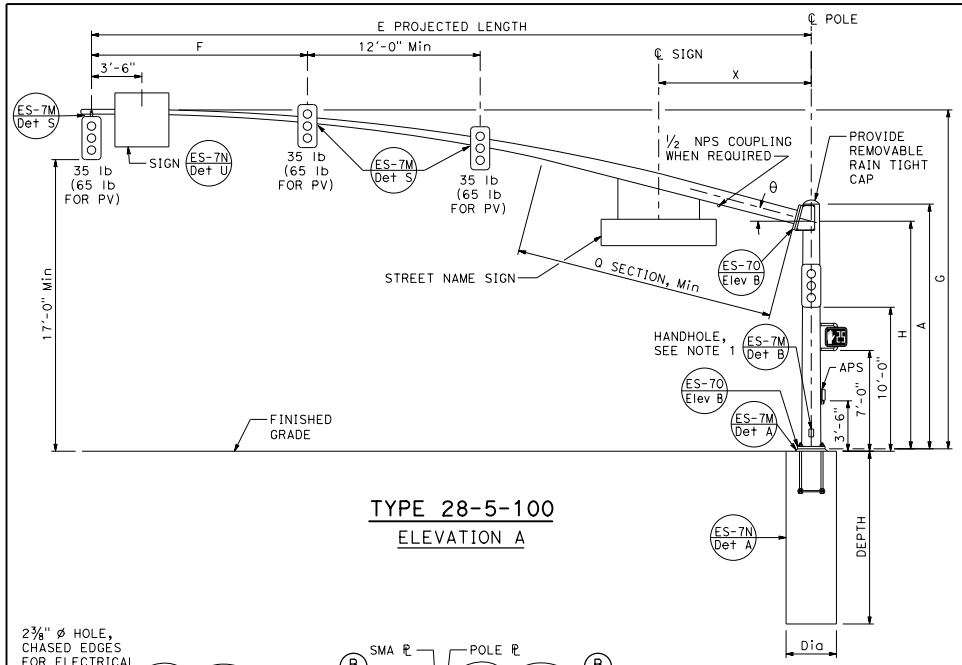

TYPE 28-5-100

ELEVATION A

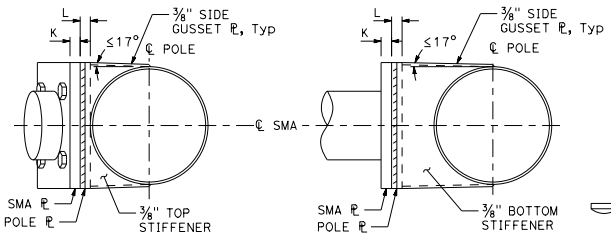

SECTION B-B

SECTION C-C

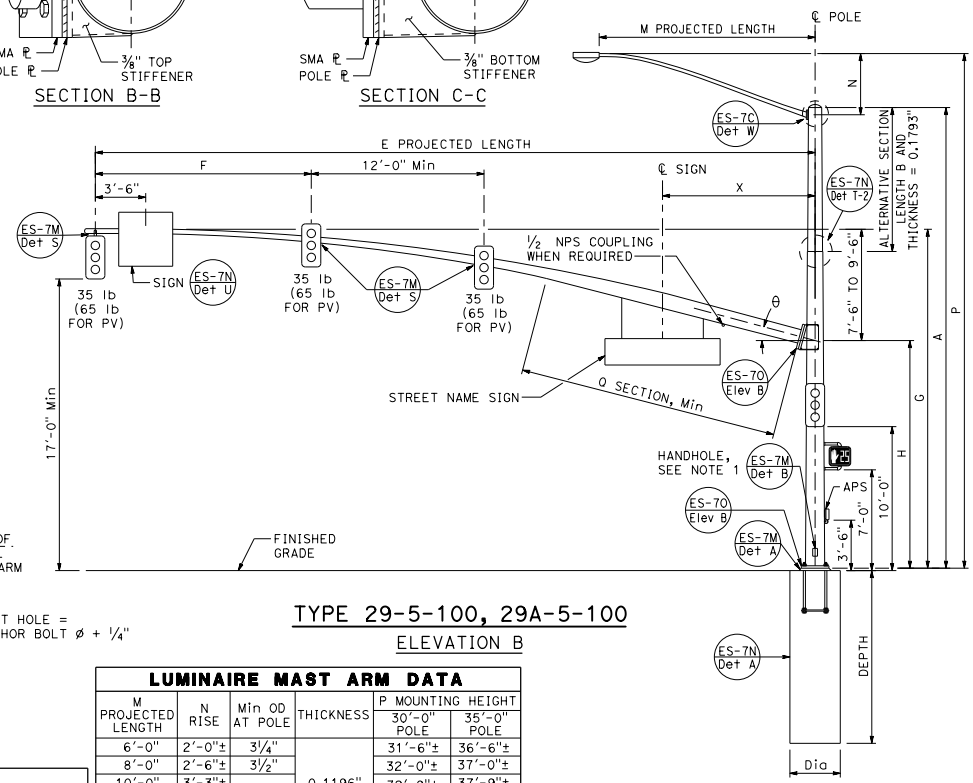

TYPE 29-5-100, 29A-5-100

ELEVATION B

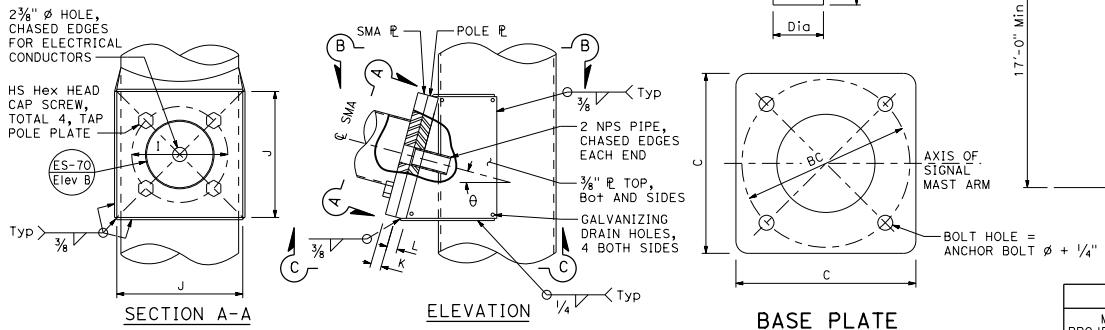

SECTION A-A

ELEVATION

SIGNAL MAST ARM CONNECTION

DETAIL A

BASE PLATE

DETAIL B

SIGNAL MAST ARM DATA

E PROJECTED LENGTH	F Min SPACING	G MOUNTING HEIGHT	H	Min OD AT POLE	THICKNESS	I BOLT CIRCLE	HS CAP SCREWS	J PLATE SIZE	K MAST ARM ℙ THICKNESS	L POLE ℙ THICKNESS	θ	Q SECTION LENGTH	Q SECTION THICKNESS	X Max
50'-0"	15'-0"	23'-7"± TO 25'-7"±	16'-0"	11 7/16"	0.1793"	16"	1½"-6NC-3¼"	1'-9"	1¾"	1¾"	15°	18'-0"	0.2391"	14'-0"
55'-0"				1'-1¼"								23'-0"		

LUMINAIRE MAST ARM DATA

M PROJECTED LENGTH	N RISE	Min OD AT POLE	THICKNESS	P MOUNTING HEIGHT 30'-0" POLE	P MOUNTING HEIGHT 35'-0" POLE
6'-0"	2'-0"±	3¼"	0.1196"	31'-6"±	36'-6"±
8'-0"	2'-6"±	3½"		32'-0"±	37'-0"±
10'-0"	3'-3"±	3⅞"		32'-9"±	37'-9"±
12'-0"	4'-3"±			33'-9"±	38'-9"±
15'-0"	4'-9"±	4¼"		34'-3"±	39'-3"±

POLE TYPE	LOAD CASE	WIND VELOCITY (mph)	POLE DATA A HEIGHT	Min OD BASE	Min OD TOP	THICKNESS	ALTERNATIVE SECTION B LENGTH	ALTERNATIVE SECTION BOTTOM	ALTERNATIVE SECTION TOP	BASE PLATE DATA C	BC	THICKNESS	ANCHOR BOLT SIZE	LUMINAIRE MAST ARM	SIGNAL MAST ARM	CIDH PILE FOUNDATION Dia	DEPTH
28-5-100	5	100	17'-0"	22"	19 5/8"	0.375"		19⅛"	17¾"	2'-6"	2'-4"	3"	2¼" ø x 42"	NONE	50'-0", 55'-0"	4'-0"	14'-0"
29-5-100			30'-0"		17¾"		10'-0"							6'-15' 15'-0"			
29A-5-100			35'-0"		17"		15'-0"		17"								

INDICATES MAST ARM LENGTH TO BE USED UNLESS OTHERWISE NOTED ON PLANS.

STATE OF CALIFORNIA
DEPARTMENT OF TRANSPORTATION

ELECTRICAL SYSTEMS (SIGNAL AND LIGHTING STANDARD, CASE 5 SIGNAL MAST ARM LOADING, WIND VELOCITY = 100 MPH AND SIGNAL MAST ARM LENGTHS 50' TO 55')

NO SCALE

ES-7G

7-1-26

Return to Table of Contents

Dist	COUNTY	ROUTE	POST MILES TOTAL PROJECT	SHEET No.	TOTAL SHEETS

REGISTERED CIVIL ENGINEER

September 18, 2026

PLANS APPROVAL DATE

REGISTERED PROFESSIONAL ENGINEER — Mahesh Shrestha — No. C80133 — Exp. 9-30-26 — CIVIL — STATE OF CALIFORNIA

THE STATE OF CALIFORNIA OR ITS OFFICERS OR AGENTS SHALL NOT BE RESPONSIBLE FOR THE ACCURACY OR COMPLETENESS OF SCANNED COPIES OF THIS PLAN SHEET.

NOTES:

1. The radial separation between the face of the pole and the adjacent insides of the top and bottom gusset plates shall not exceed 3/16". Fillet weld size to be increased by amount of gap.
2. Handhole shall be located on the downstream side of traffic.

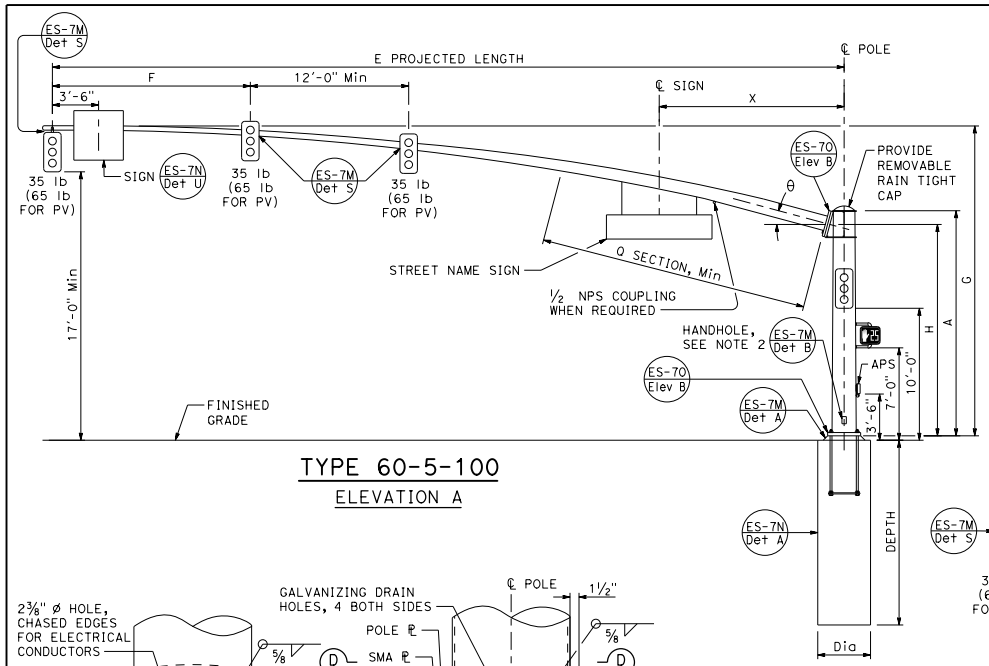

TYPE 60-5-100

ELEVATION A

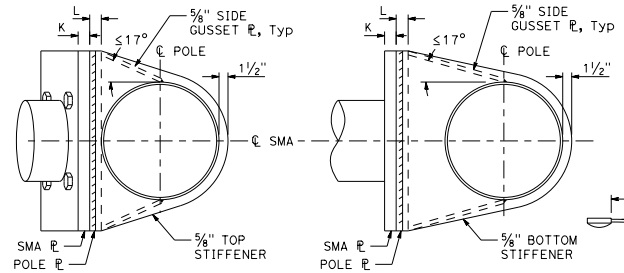

SECTION D-D

SECTION E-E

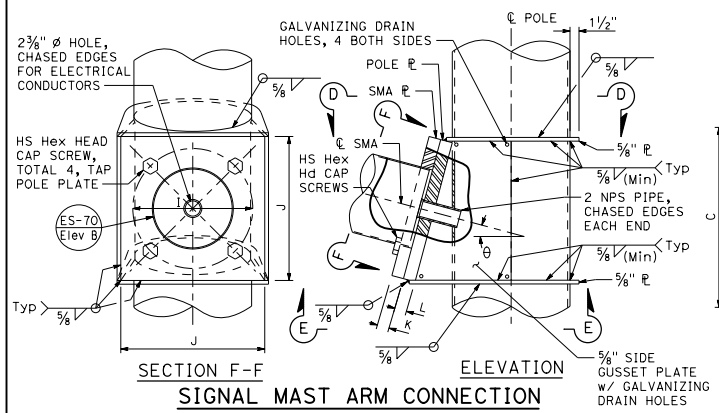

SECTION F-F

ELEVATION

SIGNAL MAST ARM CONNECTION

DETAIL A

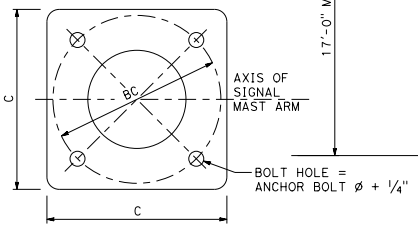

BASE PLATE

DETAIL B

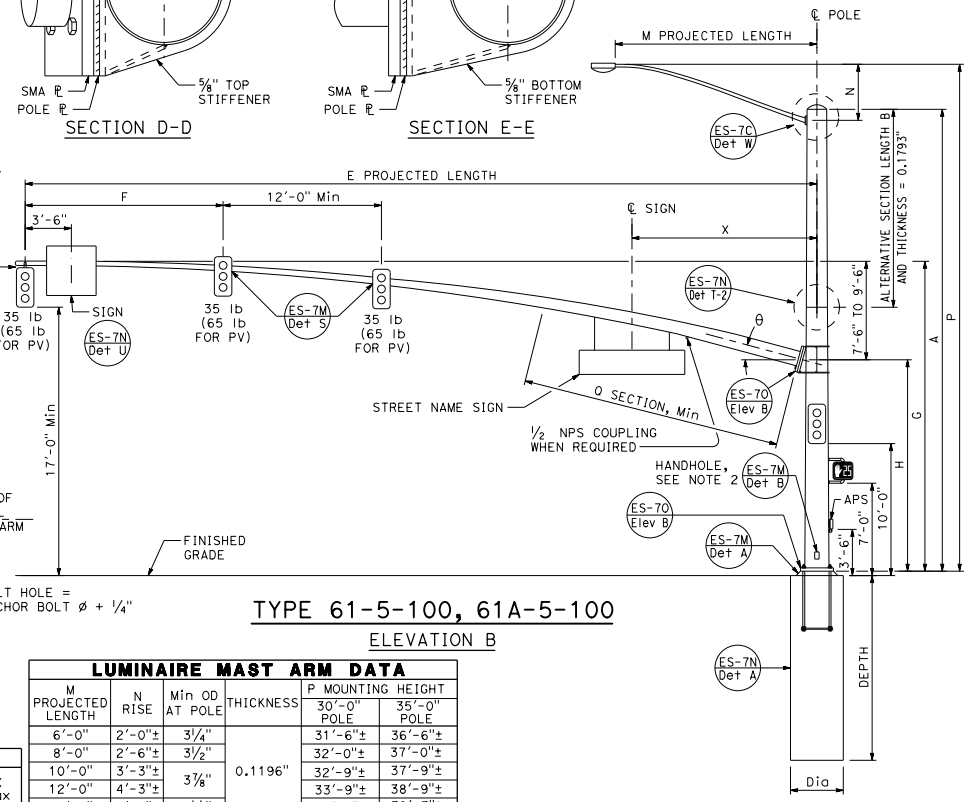

TYPE 61-5-100, 61A-5-100

ELEVATION B

LUMINAIRE MAST ARM DATA

M PROJECTED LENGTH	N RISE	Min OD AT POLE	THICKNESS	P MOUNTING HEIGHT 30'-0" POLE	P MOUNTING HEIGHT 35'-0" POLE
6'-0"	2'-0"±	3¼"	0.1196"	31'-6"±	36'-6"±
8'-0"	2'-6"±	3½"		32'-0"±	37'-0"±
10'-0"	3'-3"±	3⅞"		32'-9"±	37'-9"±
12'-0"	4'-3"±			33'-9"±	38'-9"±
15'-0"	4'-9"±	4¼"		34'-3"±	39'-3"±

SIGNAL MAST ARM DATA

E PROJECTED LENGTH	F Min SPACING	G MOUNTING HEIGHT	H	Min OD AT POLE	THICKNESS	I BOLT CIRCLE	HS CAP SCREWS	J PLATE SIZE	K MAST ARM ℙ THICKNESS	L POLE ℙ THICKNESS	θ	Q SECTION LENGTH	Q SECTION THICKNESS	X Max
60'-0"	15'-0"	23'-7" TO 25'-7"	16'-0"	1'-1½"	0.1793"	20"	1½"-6NC-4"	2'-0"	2"	2"	15°	24'-0"	0.2391"	14'-0"
65'-0"					0.2391"							29'-0"	0.3125"	

POLE TYPE	LOAD CASE	WIND VELOCITY (mph)	POLE DATA A HEIGHT	Min OD BASE	Min OD TOP	THICKNESS	ALTERNATIVE SECTION B LENGTH	BOTTOM	TOP	BASE PLATE DATA C	BC	THICKNESS	ANCHOR BOLT SIZE	LUMINAIRE MAST ARM	SIGNAL MAST ARM	CIDH PILE FOUNDATION Dia	DEPTH
60-5-100	5	100	17'-0"	22"	19⅝"	0.375"				2'-6"	2'-4"	3"	2¼" ø x 42"	NONE	60'-0", [65'-0"]	4'-0"	14'-0"
61-5-100			30'-0"	25"	20¾"		10'-0"	22⅛"	20¾"	2'-11"	2'-9"		3" ø x 60"	6'-15' [15'-0"]		4'-6"	15'-0"
61A-5-100			35'-0"		20"		15'-0"		20"								

[ ] INDICATES MAST ARM LENGTH TO BE USED UNLESS OTHERWISE NOTED ON PLANS.

STATE OF CALIFORNIA
DEPARTMENT OF TRANSPORTATION

ELECTRICAL SYSTEMS (SIGNAL AND LIGHTING STANDARD, CASE 5 SIGNAL MAST ARM LOADING, WIND VELOCITY = 100 MPH AND SIGNAL MAST ARM LENGTHS 60' TO 65')

NO SCALE

ES-7H

7-1-26

Return to Table of Contents

Dist	COUNTY	ROUTE	POST MILES TOTAL PROJECT	SHEET No.	TOTAL SHEETS

REGISTERED CIVIL ENGINEER

September 18, 2026
PLANS APPROVAL DATE

REGISTERED PROFESSIONAL ENGINEER
Mahesh Shrestha
No. C80133
Exp. 9-30-26
CIVIL
STATE OF CALIFORNIA

THE STATE OF CALIFORNIA OR ITS OFFICERS OR AGENTS SHALL NOT BE RESPONSIBLE FOR THE ACCURACY OR COMPLETENESS OF SCANNED COPIES OF THIS PLAN SHEET.

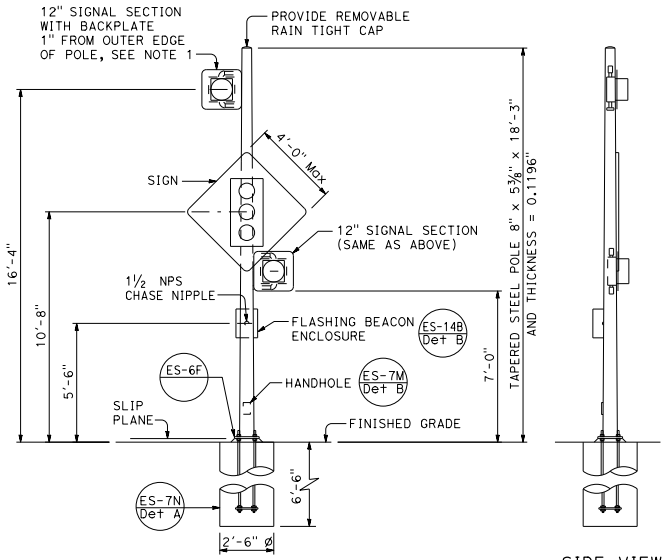

FRONT VIEW

SIDE VIEW

TYPE 15-FBS
FLASHING BEACON WITH SLIP BASE INSTALLATION
DETAIL A

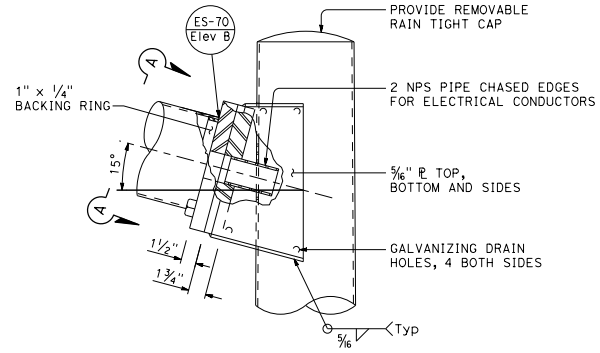

ELEVATION B

NOTES:

1. See Standard Plans ES-4A and ES-4D for attachment fitting details.
2. For Type 15-FBS fixed base, use Type 15 base plate and foundation shown on Standard Plan ES-6A.
3. Handholes shall be located on the downstream side of traffic.

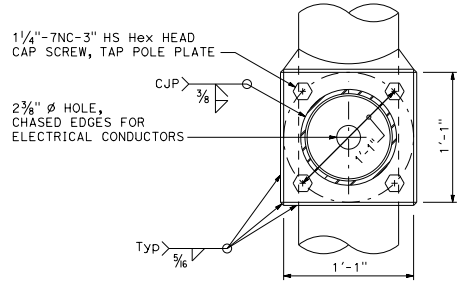

VIEW A-A

FLASHING BEACON MAST ARM CONNECTION DETAIL
DETAIL B

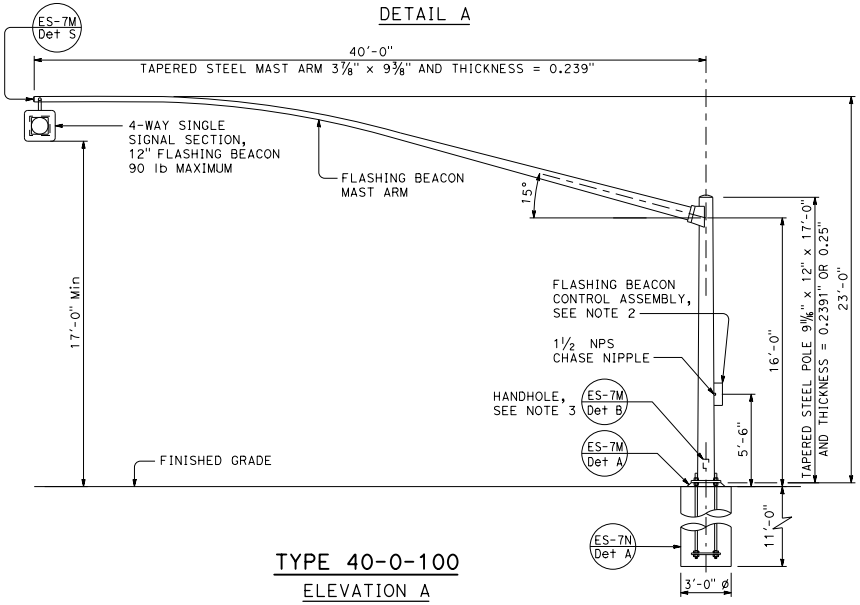

TYPE 40-0-100
ELEVATION A

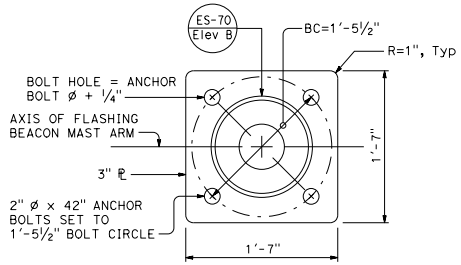

BASE PLATE
DETAIL C

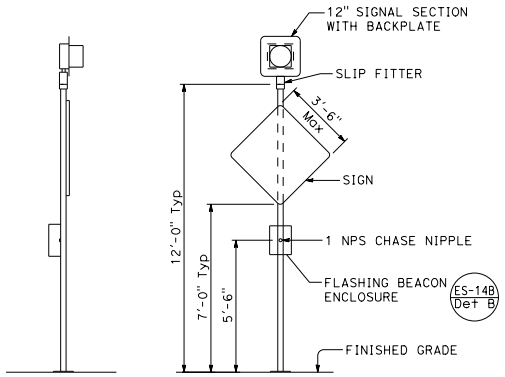

SIDE VIEW

FRONT VIEW

TYPE 1
FLASHING BEACON INSTALLATION
DETAIL D

STATE OF CALIFORNIA
DEPARTMENT OF TRANSPORTATION

ELECTRICAL SYSTEMS (FLASHING BEACON ON A TYPE 1, TYPE 15-FBS, AND TYPE 40 STANDARD)

NO SCALE

ES-7J

7-1-26

2026 STANDARD PLAN ES-7J

Return to Table of Contents

Dist	COUNTY	ROUTE	POST MILES TOTAL PROJECT	SHEET No.	TOTAL SHEETS

REGISTERED CIVIL ENGINEER

September 18, 2026

PLANS APPROVAL DATE

REGISTERED PROFESSIONAL ENGINEER Mahesh Shrestha No. C80133 Exp. 9-30-26 CIVIL STATE OF CALIFORNIA

THE STATE OF CALIFORNIA OR ITS OFFICERS OR AGENTS SHALL NOT BE RESPONSIBLE FOR THE ACCURACY OR COMPLETENESS OF SCANNED COPIES OF THIS PLAN SHEET.

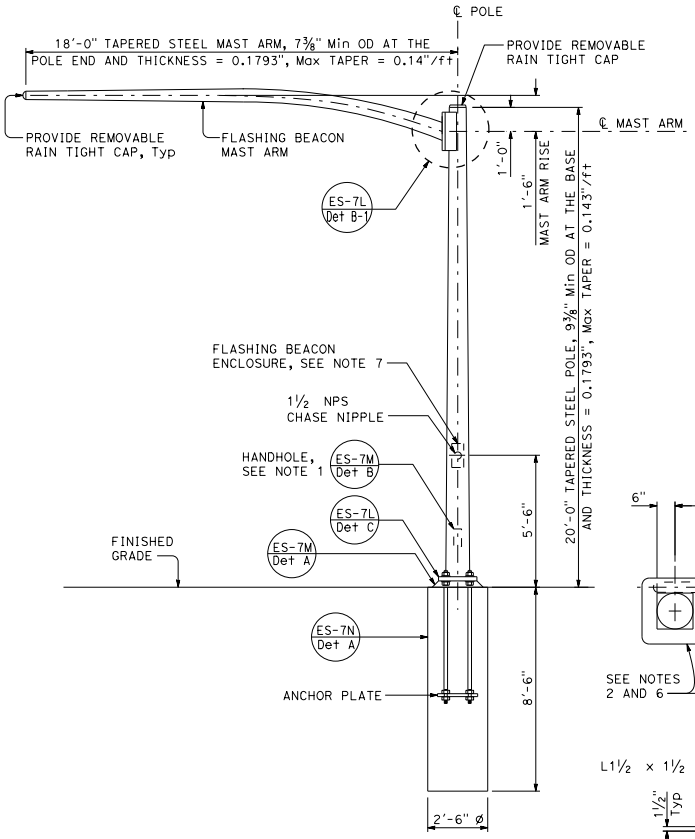

ELEVATION A

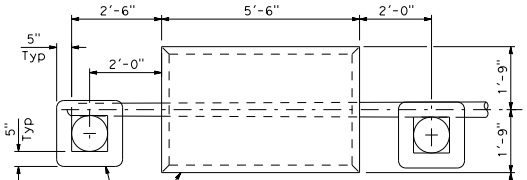

TYPE 9

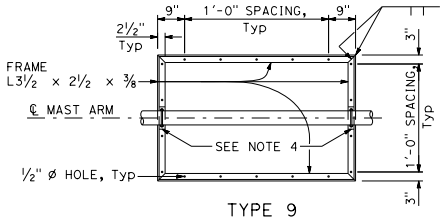

TYPE 9

NOTES:

1. Handhole shall be located on the downstream side of traffic.
2. Install flashing beacons and sign frame. Flashing beacons shall be MAT mounted on pipe tenon, see Standard Plan ES-7M, Detail S.
3. Vertical clearance shall be 17'-0" minimum between roadway and bottom of signal panel.
4. See Standard Plan ES-7L, Detail B, for sign frame mounting details.
5. For additional notes and details, see Standard Plan ES-7L, Detail B-3.
6. 12" flashing beacon with signal indication, standard visor and 5" x 5" backplate, total 2.
7. Locate flashing beacon enclosure on the side of the pole away from traffic. For wiring diagram, see Standard Plan ES-14B.

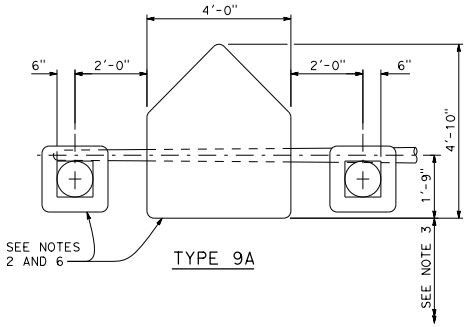

TYPE 9A

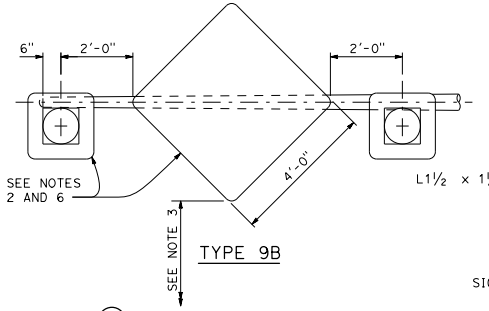

TYPE 9B

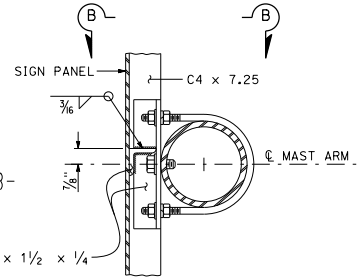

SECTION A-A

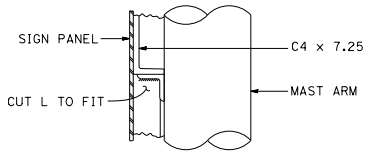

SECTION B-B

TYPE 9B

DETAIL B

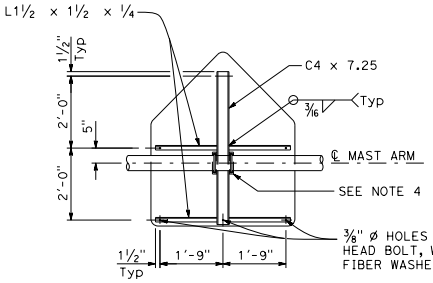

TYPE 9A

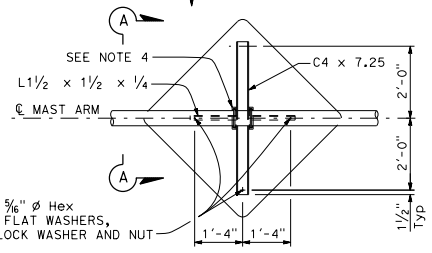

TYPE 9B

FRAME DETAILS

DETAIL A

STATE OF CALIFORNIA
DEPARTMENT OF TRANSPORTATION

ELECTRICAL SYSTEMS (FLASHING BEACON WITH TYPE 9, 9A, AND 9B SIGN)

NO SCALE

ES-7K

2026 STANDARD PLAN ES-7K

7-1-26

Return to Table of Contents

Dist	COUNTY	ROUTE	POST MILES TOTAL PROJECT	SHEET No.	TOTAL SHEETS

REGISTERED CIVIL ENGINEER

September 18, 2026

PLANS APPROVAL DATE

REGISTERED PROFESSIONAL ENGINEER Mahesh Shrestha No. C80133 Exp. 9-30-26 CIVIL STATE OF CALIFORNIA

THE STATE OF CALIFORNIA OR ITS OFFICERS OR AGENTS SHALL NOT BE RESPONSIBLE FOR THE ACCURACY OR COMPLETENESS OF SCANNED COPIES OF THIS PLAN SHEET.

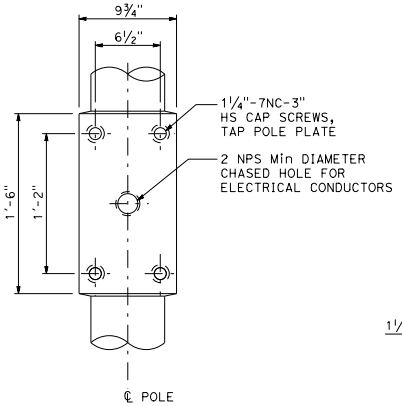

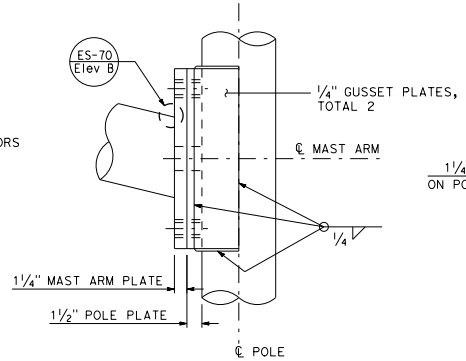

FLASHING BEACON MAST ARM CONNECTION DETAILS

DETAIL B-1

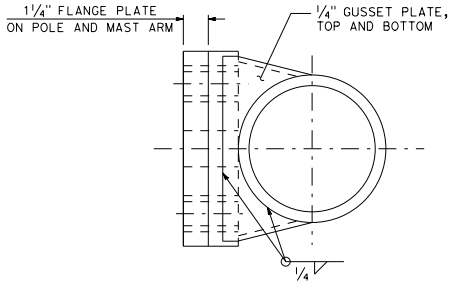

DETAIL B-2

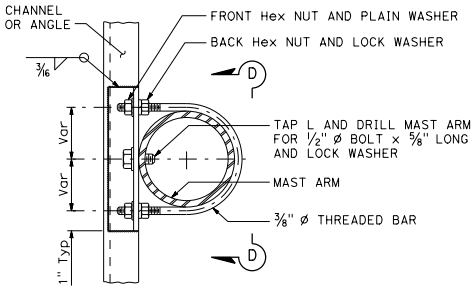

DETAIL B-3

NOTE:

Tighten front Hex nuts first, then tighten back Hex nuts.

SIGN FRAME MOUNTING DETAILS

All types

DETAIL B

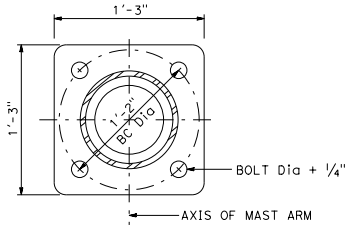

PLAN

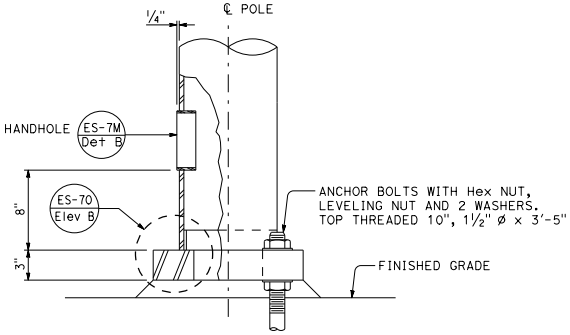

ELEVATION

BASE PLATE AND ANCHORAGE DETAIL

DETAIL C

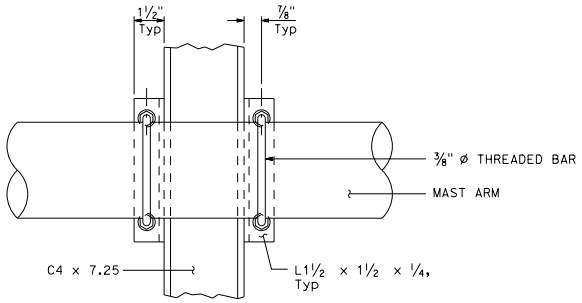

VIEW D-D

STATE OF CALIFORNIA
DEPARTMENT OF TRANSPORTATION

ELECTRICAL SYSTEMS (FLASHING BEACON WITH TYPE 9, 9A, AND 9B SIGN)

NO SCALE

ES-7L

2026 STANDARD PLAN ES-7L

7-1-26

Return to Table of Contents

Dist	COUNTY	ROUTE	POST MILES TOTAL PROJECT	SHEET No.	TOTAL SHEETS

REGISTERED CIVIL ENGINEER

September 18, 2026

PLANS APPROVAL DATE

Mahesh Shrestha No. C80133 Exp. 9-30-26 CIVIL STATE OF CALIFORNIA REGISTERED PROFESSIONAL ENGINEER

THE STATE OF CALIFORNIA OR ITS OFFICERS OR AGENTS SHALL NOT BE RESPONSIBLE FOR THE ACCURACY OR COMPLETENESS OF SCANNED COPIES OF THIS PLAN SHEET.

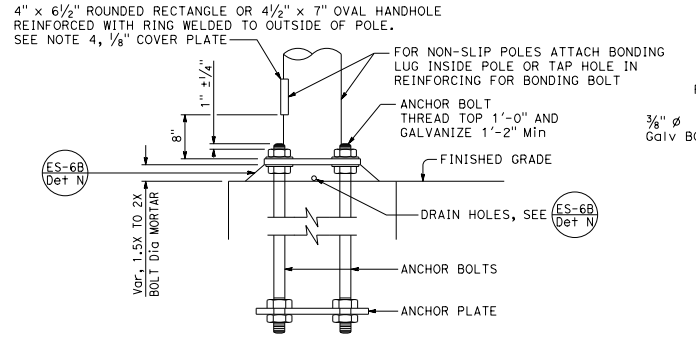

HANDHOLE AND ANCHORAGE

DETAIL A

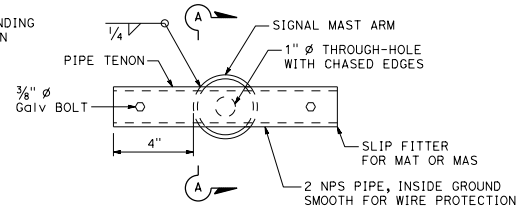

DOUBLE SIDE TENON

DETAIL S-2

Second side limited to 15 lb and 1.3 square feet effective pressure area

Type — Load case (Use SL for special load case) — Design wind velocity (mph) — Signal mast arm length (ft) — Near handhole: Maximum signal mast arm length for pole type / Near pole plate: Installed signal mast arm length — Standard plan year — Only for poles or mast arms using Detail F — Only for poles or mast arms using Standard Plan ES-7O

26A - 3 - 100 - 45 - 10 - F or FB

SAMPLE IDENTIFICATION NUMBER

IDENTIFICATION NUMBER

1. Attach a stamped metal tag with pole's identification number above the handhole. ¼" high number, minimum.
2. Attach a stamped metal tag with mast arm's identification number to the bottom of the signal mast arm near the pole plate. ¼" high number, minimum.

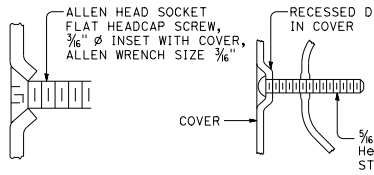

TYPICAL DETAIL

DETAIL B-1

ALTERNATIVE DETAIL

DETAIL B-2

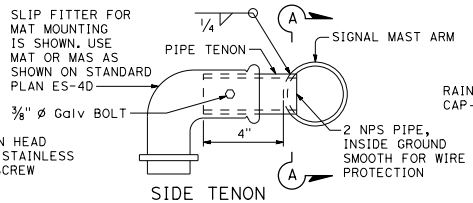

SIDE TENON

DETAIL S-1

PIPE TENONS

DETAIL S

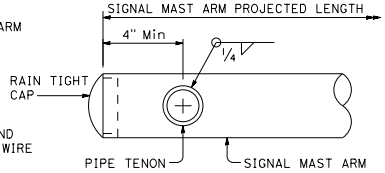

SECTION A-A

NOTES:

1. Provide a Hex nut, leveling nut and 2 washers for each bolt.
2. Luminaire mast arms shall be round, tapered steel tubes, taper of 0.1375" to 0.143 inch per foot with an end section 2⅜" OD for mounting hardware. Extensions of 2 NPS Standard pipe and 7" long may be used at the option of the manufacturer. When low pressure sodium luminaires are required, the extension shall be 1'-3".
3. Signal mast arms shall be round, tapered steel tubes, maximum taper 0.143 inch per foot.
4. Handhole reinforcement ring shall be ¼" x 2" for 0.1196" to 0.2391" thick poles, ⅜" x 2" for 0.3125" to 0.375" thick poles.
5. Detail F, fatigue resistant weld, is required at socket welded signal mast arm plate and pole base plate.
6. Cap screws shall be tightened by the turn-of-nut method ⅓ turn from a snug tight condition. No washer will be required.
7. Outside diameter, wall thickness, and corresponding section properties of poles and mast arms as shown in the Standard Plans are minimums. Unless otherwise specified, alternative sections shall require approval by the Engineer.
8. Design: AASHTO Standard Specifications for Structural Support for Highway Signs, Luminaires, and Traffic Signals, 6th Edition. Basic Wind Speed = 100 mph (3 seconds gust). Yearly Mean Wind Velocity = 15.6 mph.
9. Materials (Structural steel):
   fy = 55,000 psi (tapered steel tube and anchor bolts)
   fy = 50,000 psi (unless otherwise noted)
10. Materials (Reinforced concrete):
    f'c = 3,625 psi
    fy = 60,000 psi
11. End of luminaire arm may be swaged down to 2⅜" outside diameter.

WELD SIZE	WALL THICKNESS
3/16"	0.1196"
¼"	0.1793"
5/16"	0.2391"
⅜"	0.3125"
7/16"	0.375"

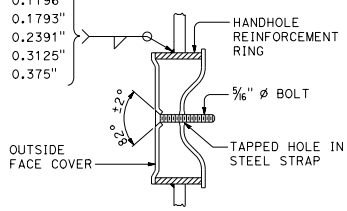

TAMPER RESISTANT HANDHOLE COVER

DETAIL B

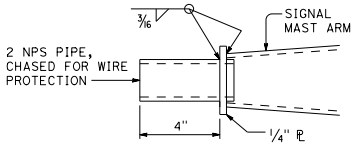

TIP TENON

DETAIL TL

This detail supersedes Detail S when so designated

WELD SIZE	WALL THICKNESS
⅛"	0.1196"
3/16"	0.1793"
¼"	0.2391"

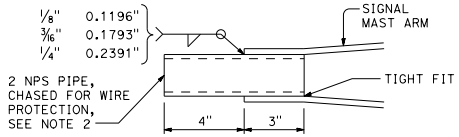

TIP TENON

DETAIL TS

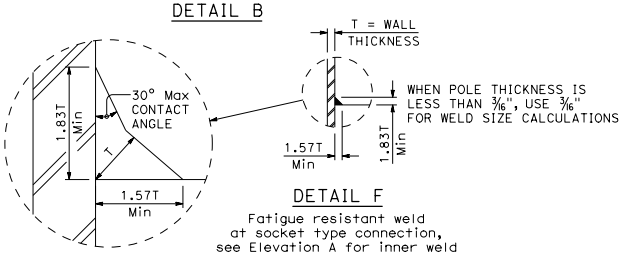

DETAIL F

Fatigue resistant weld at socket type connection, see Elevation A for inner weld

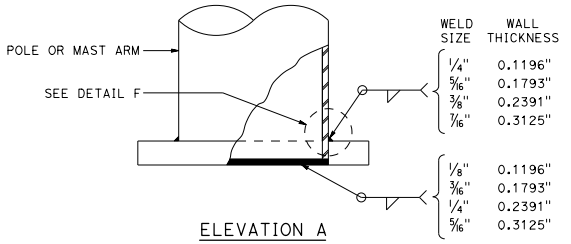

WELD SIZE	WALL THICKNESS
¼"	0.1196"
5/16"	0.1793"
⅜"	0.2391"
7/16"	0.3125"

WELD SIZE	WALL THICKNESS
⅛"	0.1196"
3/16"	0.1793"
¼"	0.2391"
5/16"	0.3125"

ELEVATION A

STATE OF CALIFORNIA
DEPARTMENT OF TRANSPORTATION

ELECTRICAL SYSTEMS (SIGNAL AND LIGHTING STANDARD, DETAILS No. 1)

NO SCALE

ES-7M

7-1-26

Return to Table of Contents

Dist	COUNTY	ROUTE	POST MILES TOTAL PROJECT	SHEET No.	TOTAL SHEETS

REGISTERED CIVIL ENGINEER

September 18, 2026
PLANS APPROVAL DATE

REGISTERED PROFESSIONAL ENGINEER — Mahesh Shrestha — No. C80133 — Exp. 9-30-26 — CIVIL — STATE OF CALIFORNIA

THE STATE OF CALIFORNIA OR ITS OFFICERS OR AGENTS SHALL NOT BE RESPONSIBLE FOR THE ACCURACY OR COMPLETENESS OF SCANNED COPIES OF THIS PLAN SHEET.

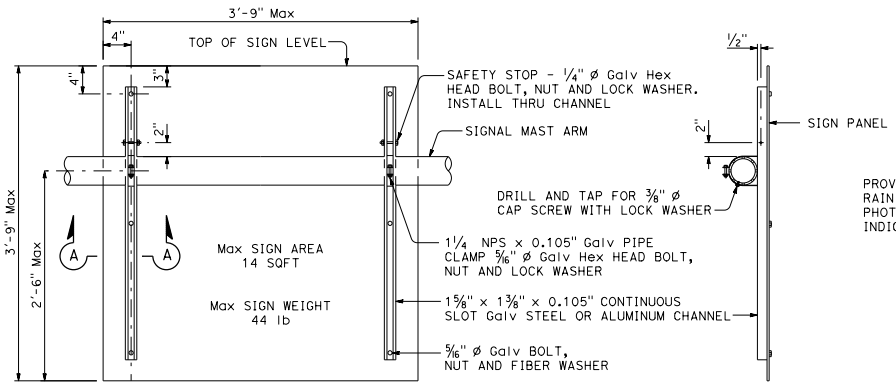

REAR VIEW

SIDE VIEW

SIGN MOUNTING DETAILS
DETAIL U

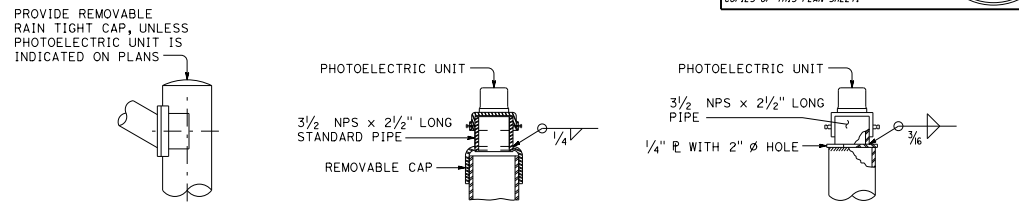

STANDARD TOP
DETAIL B-1

MOUNTING ADAPTER FOR PHOTOELECTRIC UNIT
DETAIL B-2

ALTERNATIVE MOUNTING ADAPTER
DETAIL B-3

POLE TOP DETAILS
DETAIL B

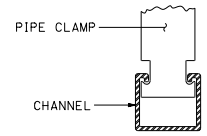

SECTION A-A

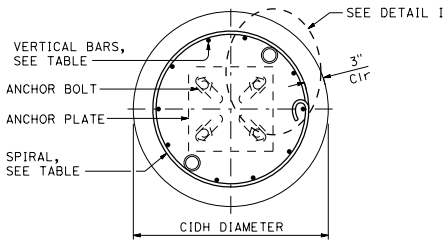

SECTION B-B

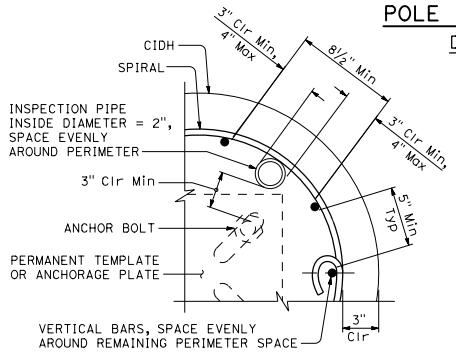

INSPECTION PIPE PLACEMENT
DETAIL I

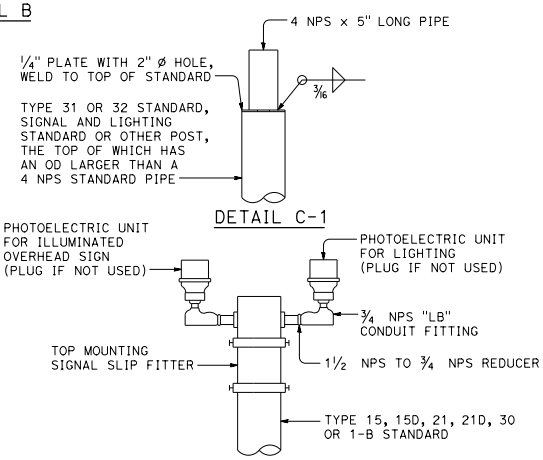

DETAIL C-1

DETAIL C-2

DUAL PHOTOELECTRIC UNIT MOUNTING DETAIL
DETAIL C

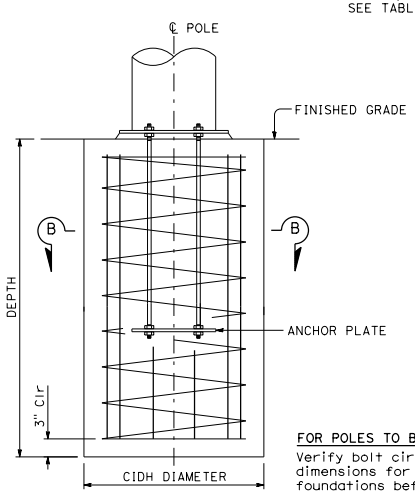

ELEVATION

CAST-IN-DRILLED-HOLE PILE FOUNDATION, REINFORCED PILE
DETAIL A

CIDH REINFORCING AND INSPECTION PIPE SCHEDULE

CIDH DIAMETER	VERTICAL BARS	SPIRAL	INSPECTION PIPE
2'-0"	8-#5	#4 @ 6"	2
2'-6"	10-#6	#4 @ 6"	4 *
3'-0"	12-#7	#5 @ 6"	4 *
3'-6"	14-#8	#5 @ 6"	4
4'-0"	18-#9	2-#4 @ 7"	5
4'-6"	18-#9	2-#5 @ 7"	5
5'-0"	22-#10	2-#5 @ 7"	6
6'-0"	26-#11	2-#6 @ 7"	7

* FOR SLIP BASE VERSIONS WITH 3 ANCHOR BOLTS, USE 3 INSPECTION PIPES.

FOR POLES TO BE INSTALLED ON EXISTING FOUNDATION:
Verify bolt circles, anchor bolt sizes and dependent dimensions for poles to be installed on existing foundations before fabricating the poles.

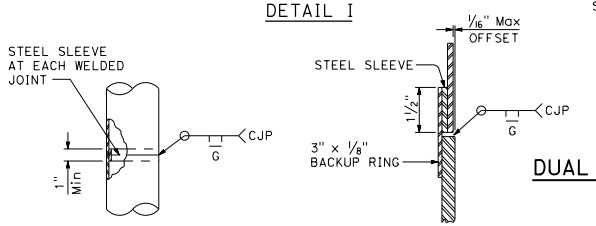

FOR UNIFORM PIPE THICKNESS
DETAIL T-1

AT PIPE THICKNESS CHANGE
DETAIL T-2

POLE SPLICES
DETAIL T

STATE OF CALIFORNIA
DEPARTMENT OF TRANSPORTATION

ELECTRICAL SYSTEMS (SIGNAL AND LIGHTING STANDARD, DETAILS No. 2)

NO SCALE

ES-7N

2026 STANDARD PLAN ES-7N

7-1-26

Return to Table of Contents

Dist	COUNTY	ROUTE	POST MILES TOTAL PROJECT	SHEET No.	TOTAL SHEETS

REGISTERED CIVIL ENGINEER

September 18, 2026
PLANS APPROVAL DATE

REGISTERED PROFESSIONAL ENGINEER
Mahesh Shrestha
No. C80133
Exp. 9-30-26
CIVIL
STATE OF CALIFORNIA

THE STATE OF CALIFORNIA OR ITS OFFICERS OR AGENTS SHALL NOT BE RESPONSIBLE FOR THE ACCURACY OR COMPLETENESS OF SCANNED COPIES OF THIS PLAN SHEET.

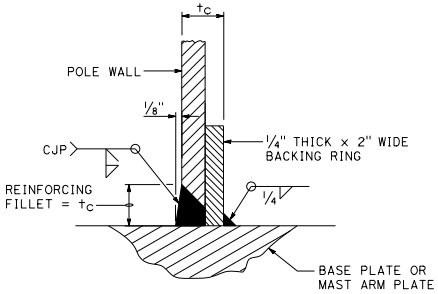

DETAIL B

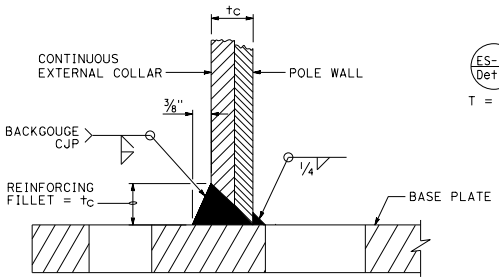

DETAIL C1

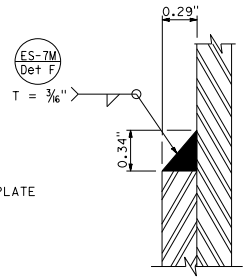

DETAIL C2

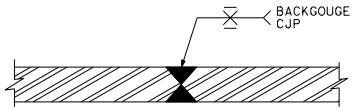

DETAIL C3

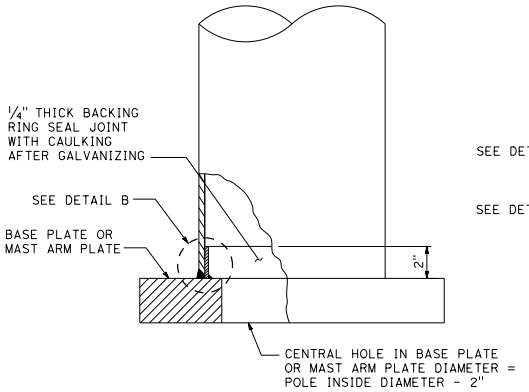

ELEVATION B

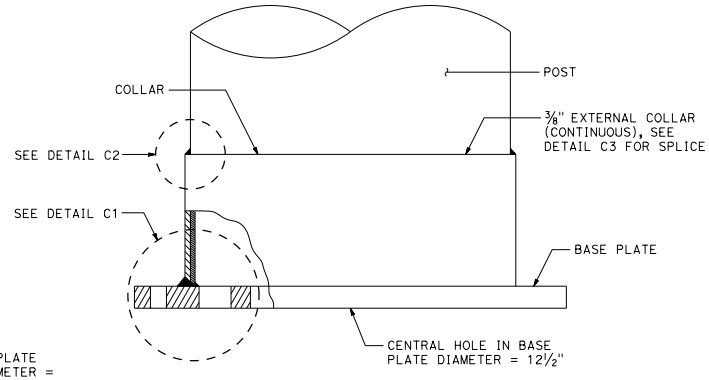

ELEVATION C

For alternative base, see Detail C4.

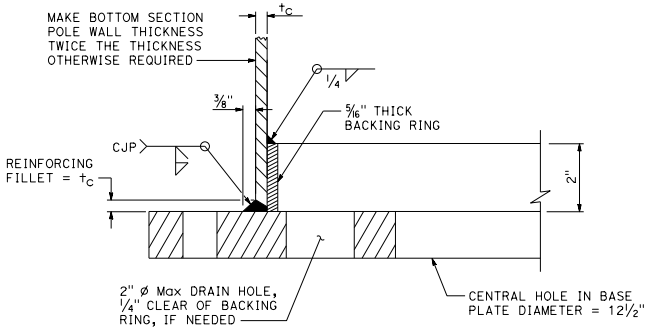

DETAIL C4

STATE OF CALIFORNIA
DEPARTMENT OF TRANSPORTATION

ELECTRICAL SYSTEMS (SIGNAL AND LIGHTING STANDARD, DETAILS No. 3)

NO SCALE

ES-70

7-1-26

2026 STANDARD PLAN ES-70

Return to Table of Contents

Dist	COUNTY	ROUTE	POST MILES TOTAL PROJECT	SHEET No.	TOTAL SHEETS

REGISTERED CIVIL ENGINEER

September 18, 2026

PLANS APPROVAL DATE

REGISTERED PROFESSIONAL ENGINEER Mahesh Shrestha No. C80133 Exp. 9-30-26 CIVIL STATE OF CALIFORNIA

THE STATE OF CALIFORNIA OR ITS OFFICERS OR AGENTS SHALL NOT BE RESPONSIBLE FOR THE ACCURACY OR COMPLETENESS OF SCANNED COPIES OF THIS PLAN SHEET.

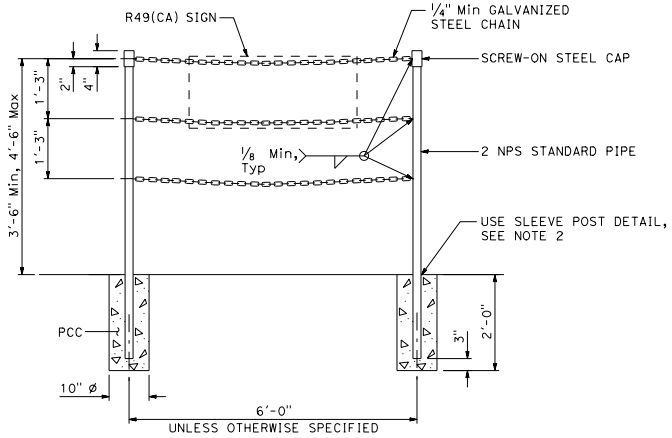

TYPE II

DETAIL A

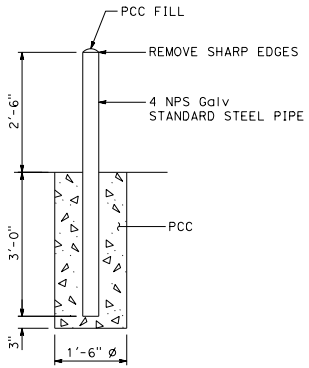

GUARD POST

DETAIL B

NOTES:

1. Pipe post to be set 1'-6" back from face of curb unless otherwise specified.
2. Where barricade posts are installed in existing concrete sidewalk, the post may be anchored to the sidewalk as shown in the Post Anchorage Detail. Bolt circle diameter shall be 4" minimum for Type I barricade and 5" minimum for Type II barricade.
3. Steel sleeve shall be constructed with an inside diameter 1/10" larger than the post's outside diameter. Wall thickness of sleeve shall be same as post or larger.
4. Alternative details may be submitted for approval by the Engineer.

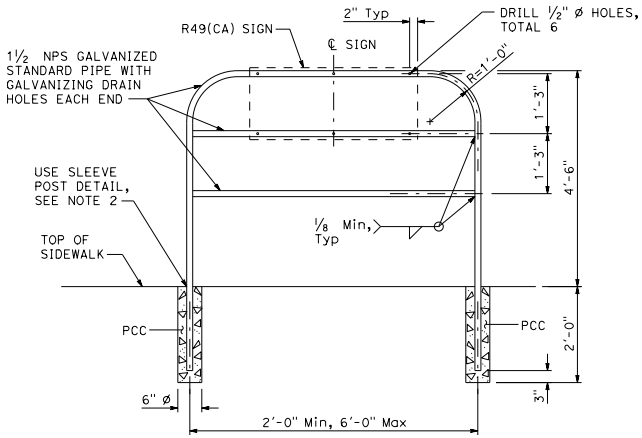

TYPE I

DETAIL C

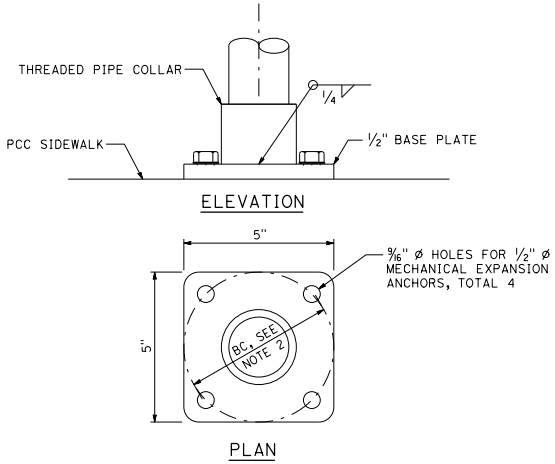

POST ANCHORAGE DETAIL

DETAIL D

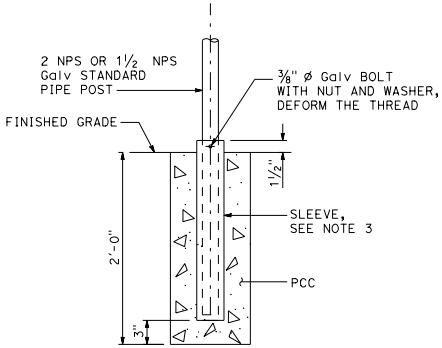

SLEEVE POST DETAIL

Use unless otherwise specified or shown on plans

DETAIL E

STATE OF CALIFORNIA
DEPARTMENT OF TRANSPORTATION

ELECTRICAL SYSTEMS (PEDESTRIAN BARRICADES)

NO SCALE

ES-7Q

2026 STANDARD PLAN ES-7Q

7-1-26

Return to Table of Contents

Dist	COUNTY	ROUTE	POST MILES TOTAL PROJECT	SHEET No.	TOTAL SHEETS

REGISTERED CIVIL ENGINEER

September 18, 2026

PLANS APPROVAL DATE

REGISTERED PROFESSIONAL ENGINEER
Mahesh Shrestha
No. C80133
Exp. 9-30-26
CIVIL
STATE OF CALIFORNIA

THE STATE OF CALIFORNIA OR ITS OFFICERS OR AGENTS SHALL NOT BE RESPONSIBLE FOR THE ACCURACY OR COMPLETENESS OF SCANNED COPIES OF THIS PLAN SHEET.

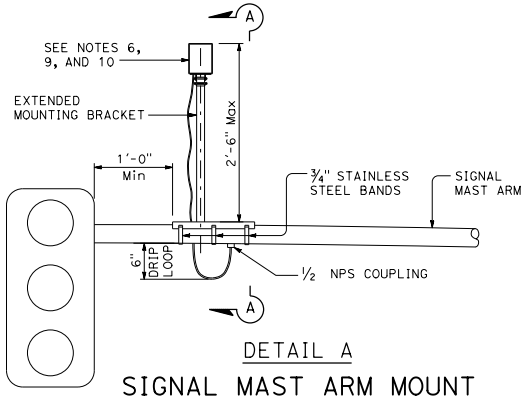

DETAIL A

SIGNAL MAST ARM MOUNT

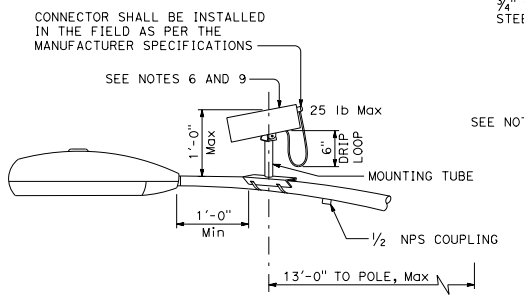

DETAIL B

LUMINAIRE MAST ARM MOUNT

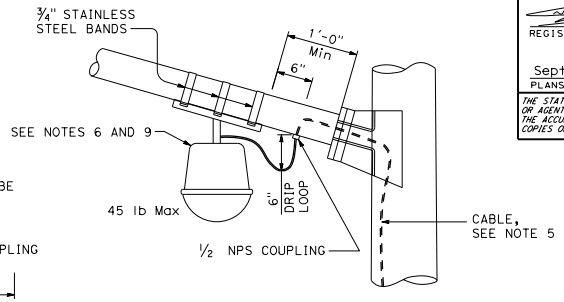

DETAIL C

LUMINAIRE MAST ARM MOUNT

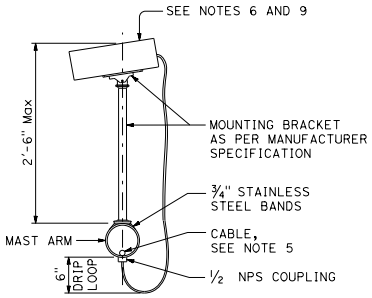

SECTION A-A

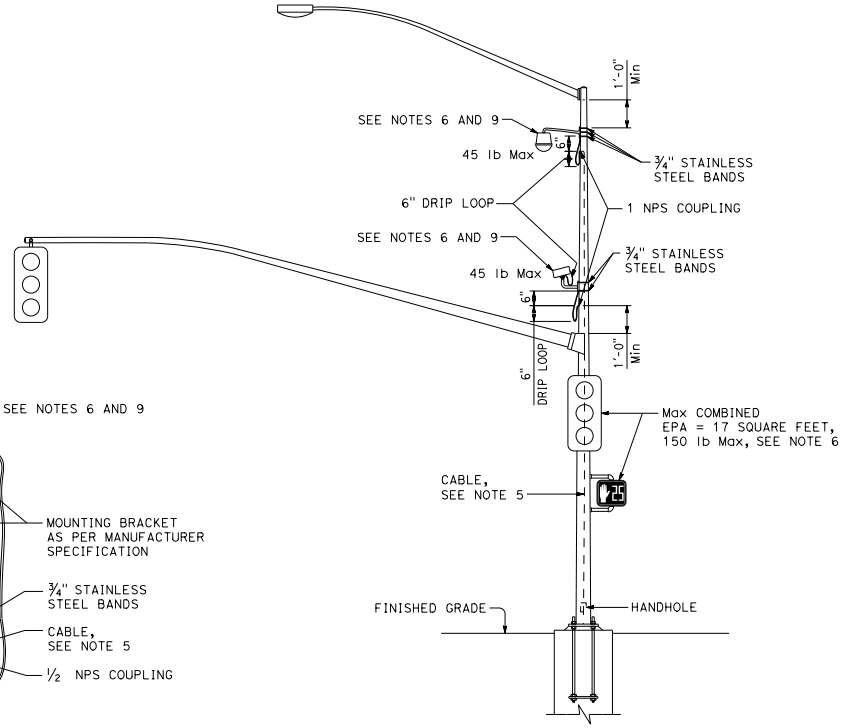

DETAIL D

SIGNAL POLE MOUNT

NOTES:

1. Exact mounting location of attachment and bracket shall be approved by the Engineer per manufacturer's recommendation.
2. Location of cable entrances on signal pole shall be a minimum of 1'-0" from any flange or base plate.
3. Cable entrances on signal pole shall be drilled for weathertight coupling as required.
4. Cable shall have a drip loop at the entrance into signal pole, luminaire mast arm and signal mast arm.
5. A single cable shall run continuous and shall not be twisted from the attachment to the controller cabinet. No splices shall be allowed.
6. Use the manufacturer's Effective Projected Area (EPA) for attachment. The maximum EPA for each attachment shall be 1.6 square feet. The maximum weight for all attachments is shown.
7. Maximum of two attachments per traffic signal standard.
8. Maximum of one attachment per mast arm.
9. Attachment shall be mounted using clamping devices.
10. Up to 45 lb allow on standards built to Standard Plans or Revised Standard Plans dated January 20, 2017 or later. Otherwise, 25 lb maximum.
11. This sheet for use with standards built to Standard Plans dated May 20, 2011 or later.

STATE OF CALIFORNIA
DEPARTMENT OF TRANSPORTATION

ELECTRICAL SYSTEMS (SIGNAL AND LIGHTING ATTACHMENTS)

NO SCALE

ES-7R

2026 STANDARD PLAN ES-7R

7-1-26

Return to Table of Contents

Dist	COUNTY	ROUTE	POST MILES TOTAL PROJECT	SHEET No.	TOTAL SHEETS

REGISTERED ELECTRICAL ENGINEER

September 18, 2026
PLANS APPROVAL DATE

REGISTERED PROFESSIONAL ENGINEER Bhanupriya Sharma No. E23752 Exp. 12-31-27 ELECTRICAL STATE OF CALIFORNIA

THE STATE OF CALIFORNIA OR ITS OFFICERS OR AGENTS SHALL NOT BE RESPONSIBLE FOR THE ACCURACY OR COMPLETENESS OF SCANNED COPIES OF THIS PLAN SHEET.

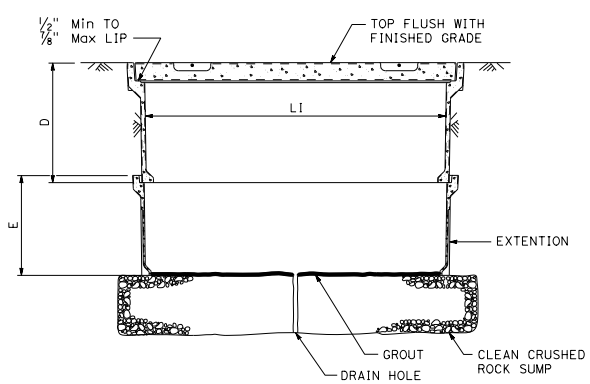

SECTION A-A

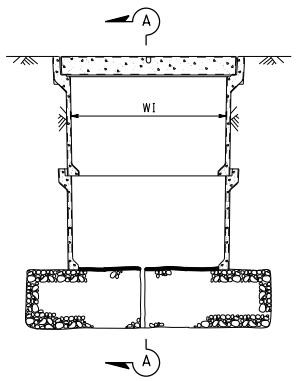

SIDE VIEW

NON-TRAFFIC PULL BOX

DETAIL A

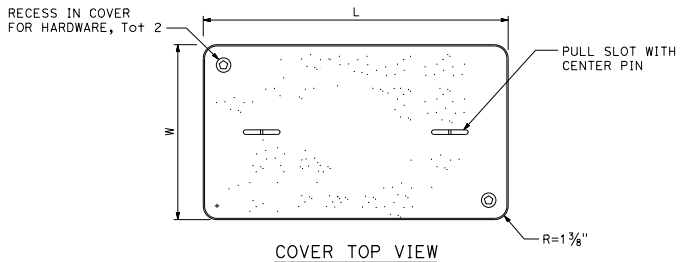

COVER TOP VIEW

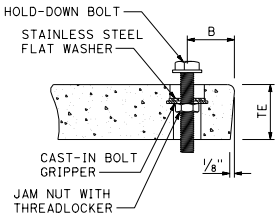

TYPICAL COVER CAPTIVE BOLT

OR SIMILAR

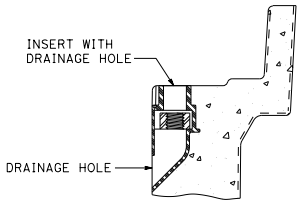

TYPICAL THREADED INSERT

OR SIMILAR

NOMINAL DIMENSIONS TABLE

PULL BOX						COVER				
PULL BOX TYPE	MINIMUM DEPTH BOX (D)	MINIMUM DEPTH EXTENSION (E)	MAXIMUM WEIGHT	LI Min	WI Min	TE	B	L	W	MAXIMUM WEIGHT
No. 3 1/2	12"	N/A	40 lb	1'-2 3/8"	9"	1 5/8"-1 3/4"	1 3/4"	1'-3 1/4" - 1'-3 3/8"	10" - 10 1/8"	30 lb
No. 5	12"	10"	65 lb	1' - 8"	11"	2"	1 3/4"	1'-11 1/4"	1'-1 3/4"	60 lb
No. 6	12"	10"	70 lb	2' - 4 1/4"	1' - 3 1/4"	2"	2"	2'-6 1/2"	1'-5 1/2"	95 lb

STATE OF CALIFORNIA
DEPARTMENT OF TRANSPORTATION

ELECTRICAL SYSTEMS (NON-TRAFFIC PULL BOX)

NO SCALE

ES-8A

2026 STANDARD PLAN ES-8A

7-1-26

Return to Table of Contents

Dist	COUNTY	ROUTE	POST MILES TOTAL PROJECT	SHEET No.	TOTAL SHEETS

REGISTERED ELECTRICAL ENGINEER

September 18, 2026

PLANS APPROVAL DATE

REGISTERED PROFESSIONAL ENGINEER Bhanupriya Sharma No. E23752 Exp. 12-31-27 ELECTRICAL STATE OF CALIFORNIA

THE STATE OF CALIFORNIA OR ITS OFFICERS OR AGENTS SHALL NOT BE RESPONSIBLE FOR THE ACCURACY OR COMPLETENESS OF SCANNED COPIES OF THIS PLAN SHEET.

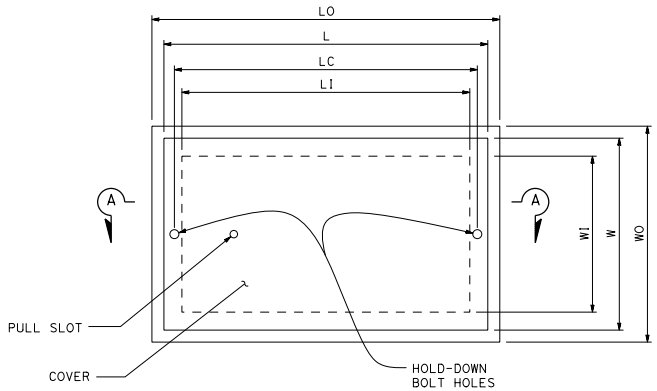

TOP VIEW

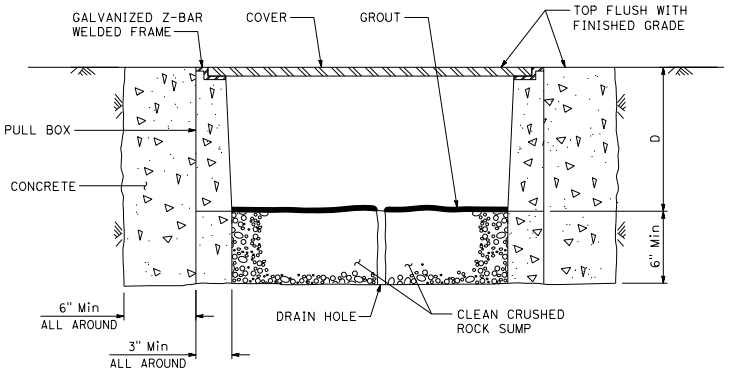

SECTION A-A

No. 3½(T), No. 5(T), AND No. 6(T) TRAFFIC PULL BOX

NOMINAL DIMENSIONS TABLE

PULL BOX							COVER		
PULL BOX TYPE	MINIMUM THICKNESS	MINIMUM DEPTH BOX D	LO	LI	WO	WI	L	W	LC
No. 3½(T)	1½"	1'-0"	1'-10" - 1'-11"	1'-5" - 1'-6½"	1'-3" - 1'-4"	10" - 1'-0"	1'-8" - 1'-8½"	1'-1" - 1'-2"	-
No. 5(T)	1¾"	1'-0"	2'-5" - 2'-6"	2'-0" - 2'-1"	1'-6" - 1'-7"	1'-1" - 1'-2"	2'-3" - 2'-3½"	1'-4" - 1'-4½"	2'-1¼"
No. 6(T)	2"	1'-0"	2'-11" - 3'-1"	2'-6" - 2'-7"	1'-10" - 2'-0"	1'-5" - 1'-6"	2'-9" - 2'-9½"	1'-8" - 1'-8½"	2'-7¼"

STATE OF CALIFORNIA
DEPARTMENT OF TRANSPORTATION

ELECTRICAL SYSTEMS (TRAFFIC PULL BOX)

NO SCALE

ES-8B

7-1-26

2026 STANDARD PLAN ES-8B

Return to Table of Contents

Dist	COUNTY	ROUTE	POST MILES TOTAL PROJECT	SHEET No.	TOTAL SHEETS

REGISTERED ELECTRICAL ENGINEER

September 18, 2026
PLANS APPROVAL DATE

REGISTERED PROFESSIONAL ENGINEER
Bhanupriya Sharma
No. E23752
Exp. 12-31-27
ELECTRICAL
STATE OF CALIFORNIA

THE STATE OF CALIFORNIA OR ITS OFFICERS OR AGENTS SHALL NOT BE RESPONSIBLE FOR THE ACCURACY OR COMPLETENESS OF SCANNED COPIES OF THIS PLAN SHEET.

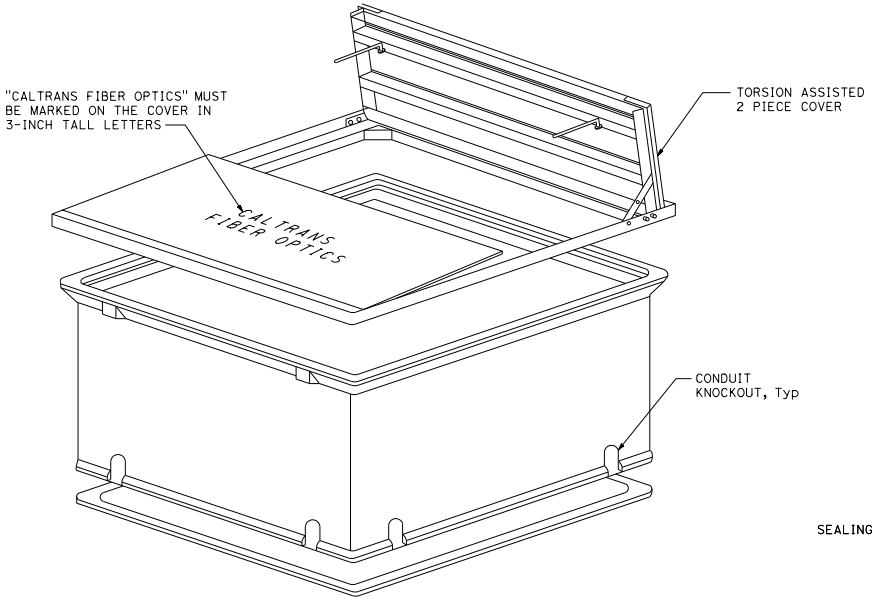

VAULT-ISOMETRIC VIEW

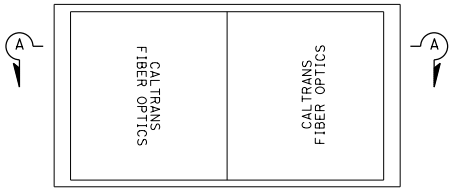

TOP VIEW

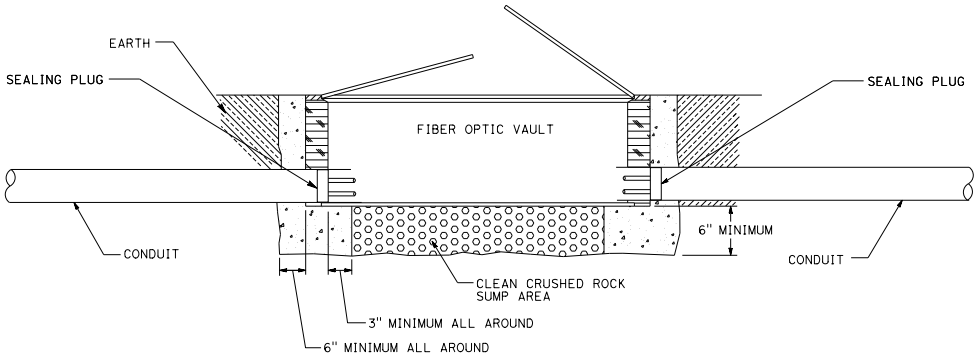

SECTION A-A

STATE OF CALIFORNIA
DEPARTMENT OF TRANSPORTATION

ELECTRICAL SYSTEMS (VAULTS)

NO SCALE

ES-8C

2026 STANDARD PLAN ES-8C

7-1-26

Return to Table of Contents

Dist	COUNTY	ROUTE	POST MILES TOTAL PROJECT	SHEET No.	TOTAL SHEETS

REGISTERED ELECTRICAL ENGINEER

September 18, 2026

PLANS APPROVAL DATE

REGISTERED PROFESSIONAL ENGINEER Bhanupriya Sharma No. E23752 Exp. 12-31-27 ELECTRICAL STATE OF CALIFORNIA

THE STATE OF CALIFORNIA OR ITS OFFICERS OR AGENTS SHALL NOT BE RESPONSIBLE FOR THE ACCURACY OR COMPLETENESS OF SCANNED COPIES OF THIS PLAN SHEET.

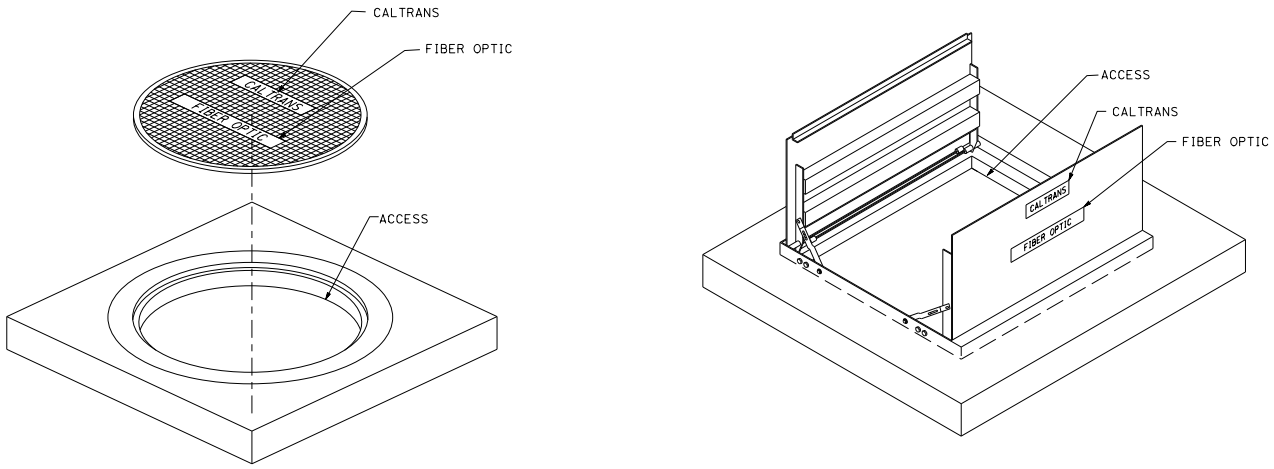

VAULT COVER AND ACCESS

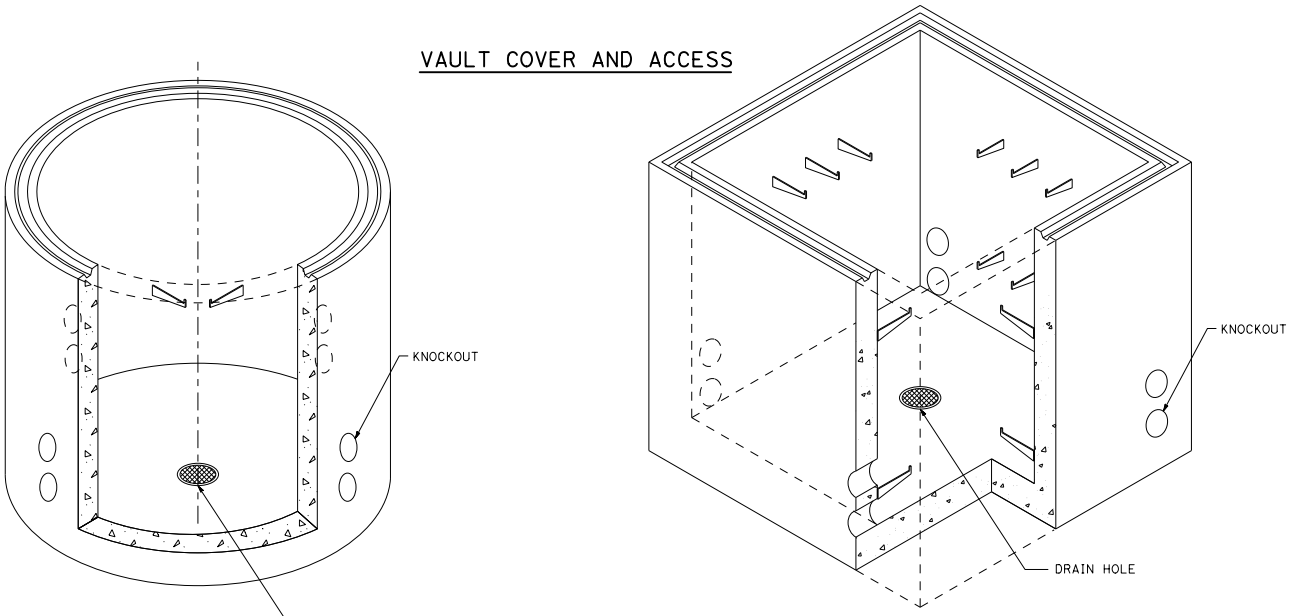

ROUND VAULT

BOX VAULT

VAULT BODY

STATE OF CALIFORNIA
DEPARTMENT OF TRANSPORTATION

ELECTRICAL SYSTEMS (VAULTS)

NO SCALE

ES-8D

2026 STANDARD PLAN ES-8D

7-1-26

Return to Table of Contents

Dist	COUNTY	ROUTE	POST MILES TOTAL PROJECT	SHEET No.	TOTAL SHEETS

REGISTERED ELECTRICAL ENGINEER

September 18, 2026
PLANS APPROVAL DATE

REGISTERED PROFESSIONAL ENGINEER Bhanupriya Sharma No. E23752 Exp. 12-31-27 ELECTRICAL STATE OF CALIFORNIA

THE STATE OF CALIFORNIA OR ITS OFFICERS OR AGENTS SHALL NOT BE RESPONSIBLE FOR THE ACCURACY OR COMPLETENESS OF SCANNED COPIES OF THIS PLAN SHEET.

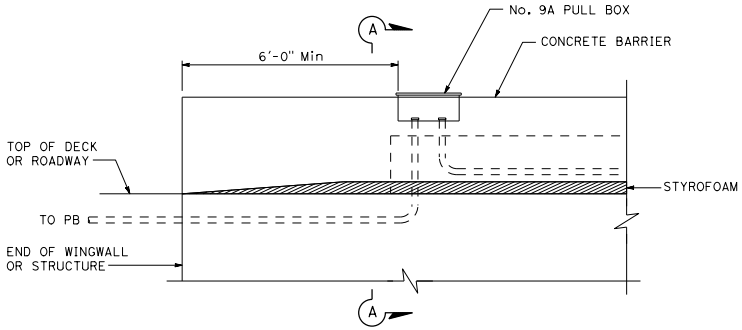

SIDE VIEW

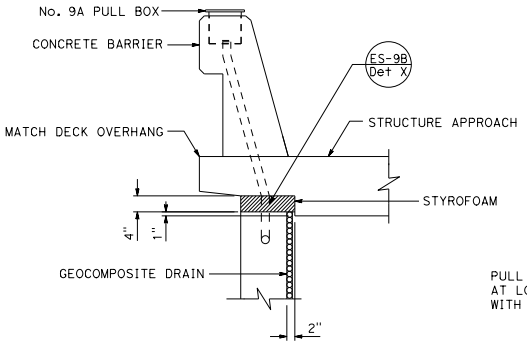

SECTION A-A

CONDUIT TERMINATION

DETAIL A

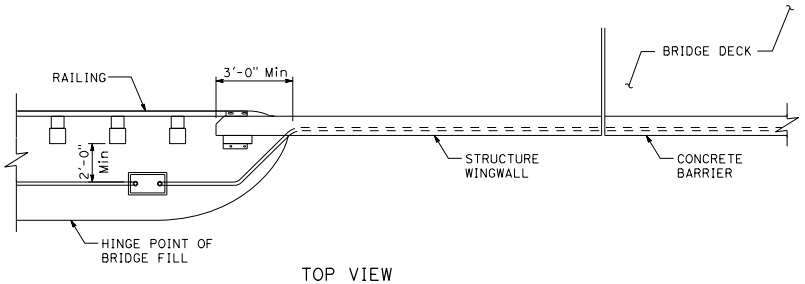

TOP VIEW

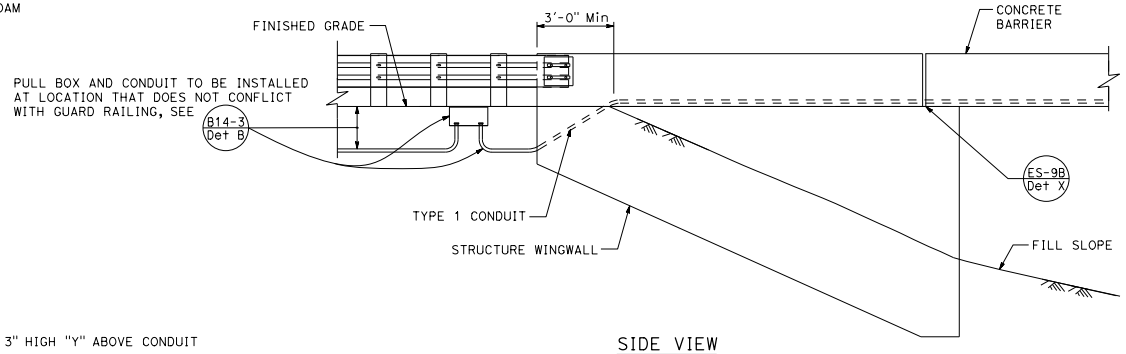

SIDE VIEW

CONDUIT TERMINATION

DETAIL I

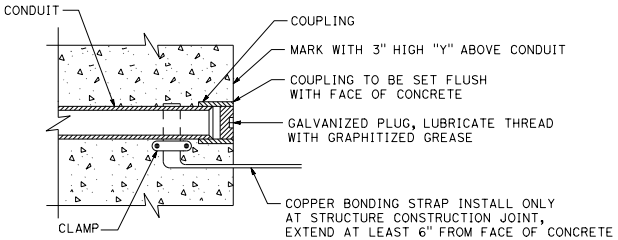

CONDUIT TERMINATION

DETAIL C

STATE OF CALIFORNIA
DEPARTMENT OF TRANSPORTATION

ELECTRICAL SYSTEMS (STRUCTURE PULL BOX INSTALLATIONS)

NO SCALE

ES-9A

2026 STANDARD PLAN ES-9A

7-1-26

Return to Table of Contents

Dist	COUNTY	ROUTE	POST MILES TOTAL PROJECT	SHEET No.	TOTAL SHEETS

M. Hosseini
REGISTERED ELECTRICAL ENGINEER

September 18, 2026
PLANS APPROVAL DATE

REGISTERED PROFESSIONAL ENGINEER
Majid Hosseini
No. E21503
Exp. 6-30-28
ELECTRICAL
STATE OF CALIFORNIA

THE STATE OF CALIFORNIA OR ITS OFFICERS OR AGENTS SHALL NOT BE RESPONSIBLE FOR THE ACCURACY OR COMPLETENESS OF SCANNED COPIES OF THIS PLAN SHEET.

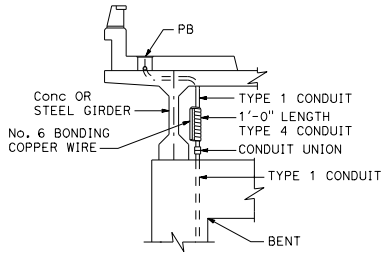

CONDUIT RISER CONNECTION

DETAIL R

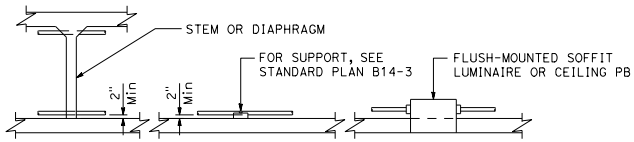

CONDUIT INSTALLATION WITHIN
BOX GIRDER SECTIONS

DETAIL S

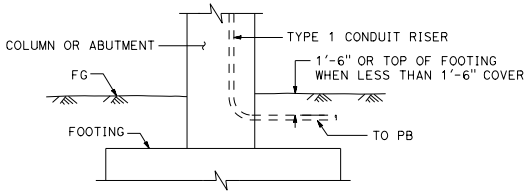

LOWER END OF CONDUIT RISER
AT COLUMN OR ABUTMENT

DETAIL T

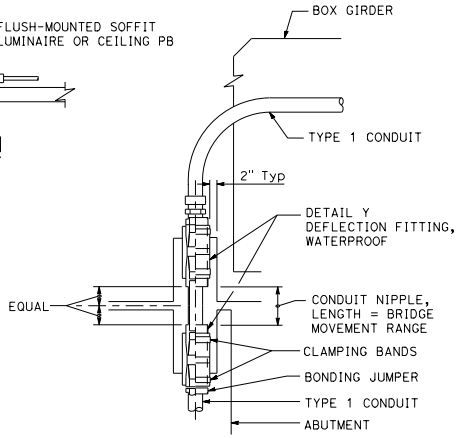

CONDUIT RISER CONNECTION
AT COLUMN, ABUTMENT OR STRUCTURE WING WALL

DETAIL U

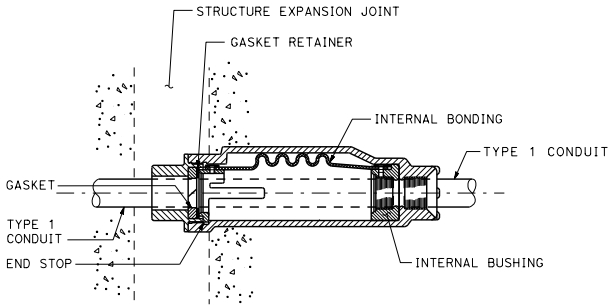

CONDUIT EXPANSION FITTING

DETAIL X

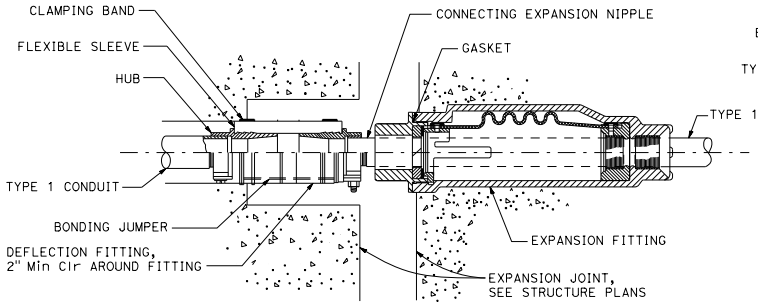

COMBINATION EXPANSION-DEFLECTION FITTINGS
METALLIC CONDUIT INSTALLATION

DETAIL XY

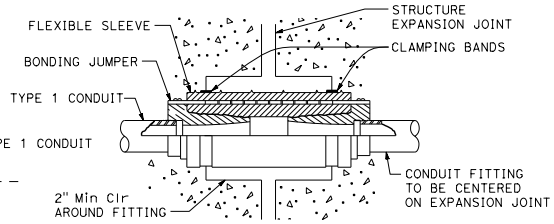

CONDUIT DEFLECTION FITTING

DETAIL Y

STATE OF CALIFORNIA
DEPARTMENT OF TRANSPORTATION

ELECTRICAL SYSTEMS (CONDUIT RISER EXPANSION AND DEFLECTION FITTINGS, STRUCTURE INSTALLATIONS)

NO SCALE

ES-9B

2026 STANDARD PLAN ES-9B

7-1-26

Return to Table of Contents

Dist	COUNTY	ROUTE	POST MILES TOTAL PROJECT	SHEET No.	TOTAL SHEETS

REGISTERED ELECTRICAL ENGINEER

September 18, 2026

PLANS APPROVAL DATE

REGISTERED PROFESSIONAL ENGINEER Bhanupriya Sharma No. E23752 Exp. 12-31-27 ELECTRICAL STATE OF CALIFORNIA

THE STATE OF CALIFORNIA OR ITS OFFICERS OR AGENTS SHALL NOT BE RESPONSIBLE FOR THE ACCURACY OR COMPLETENESS OF SCANNED COPIES OF THIS PLAN SHEET.

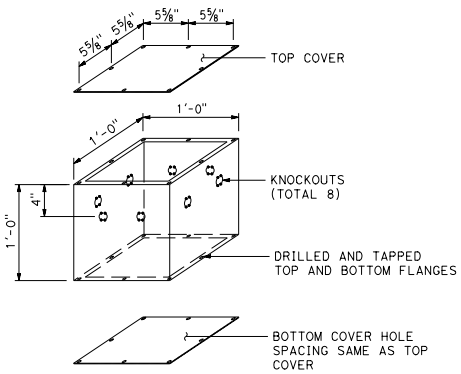

No. 7 PULL BOX

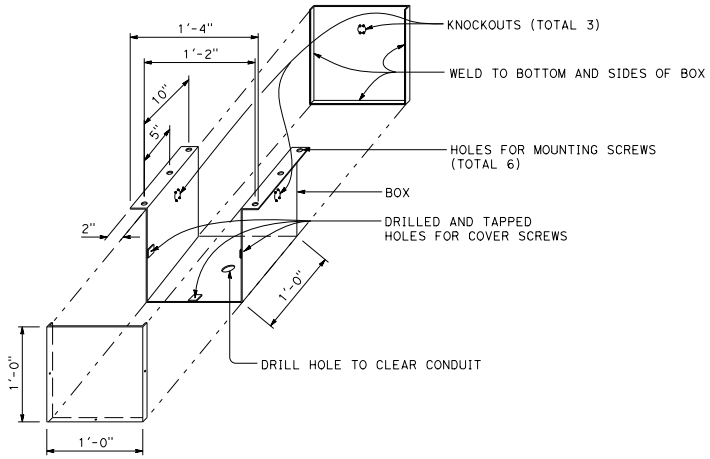

No. 8 PULL BOX

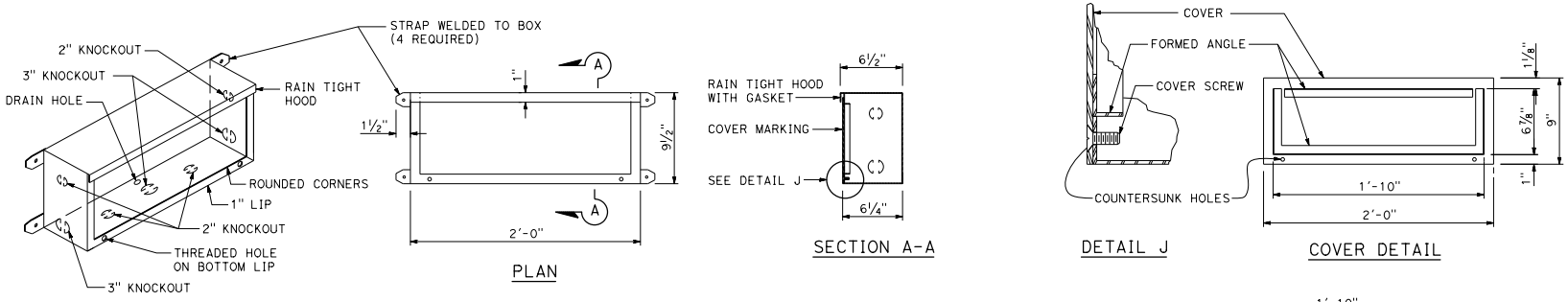

No. 9 PULL BOX

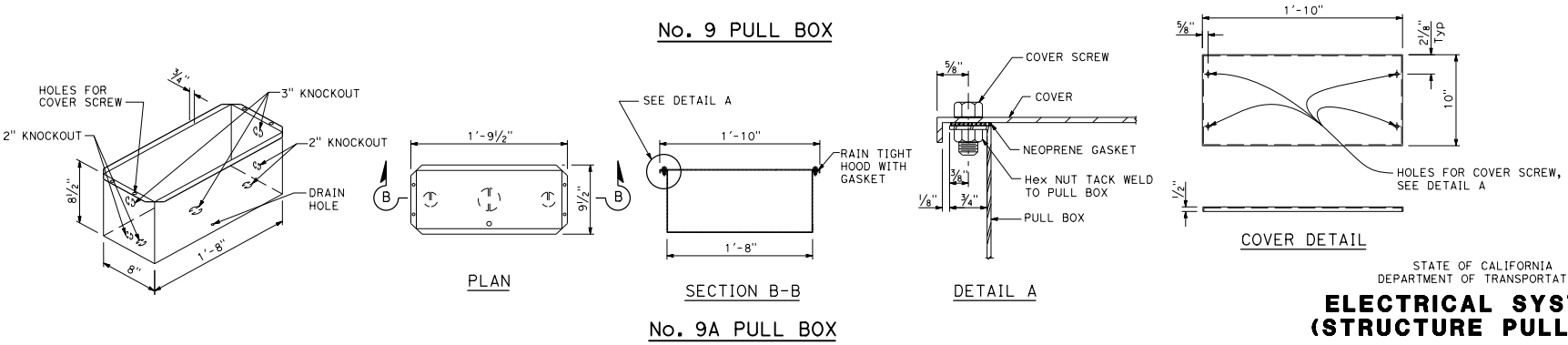

No. 9A PULL BOX

STATE OF CALIFORNIA
DEPARTMENT OF TRANSPORTATION

ELECTRICAL SYSTEMS (STRUCTURE PULL BOX)

NO SCALE

ES-9C

2026 STANDARD PLAN ES-9C

7-1-26

Return to Table of Contents

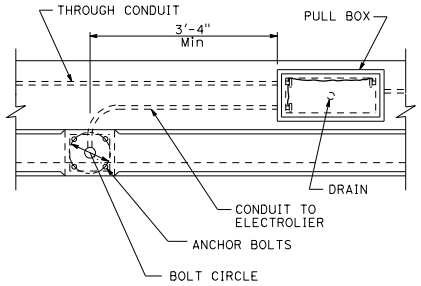

TOP VIEW

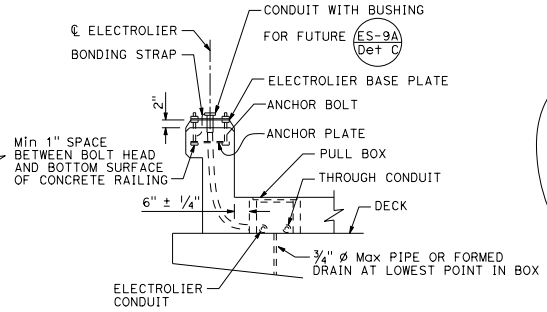

END VIEW

No. 3½, 5, OR 6 PULL BOX INSTALLATION

DETAIL A

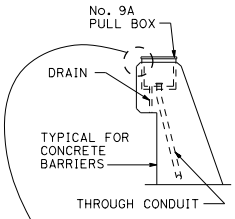

END VIEW

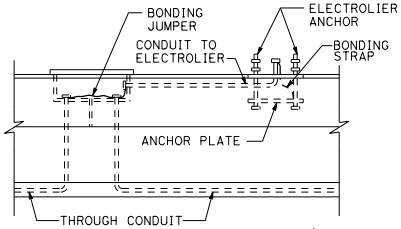

SIDE VIEW

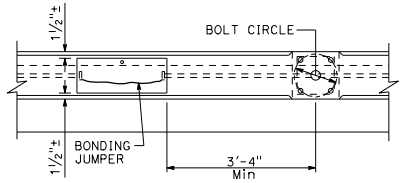

TOP VIEW

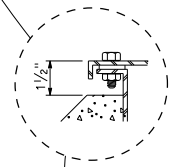

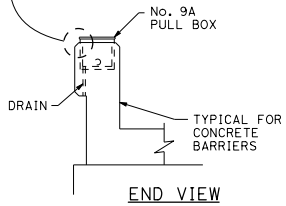

END VIEW

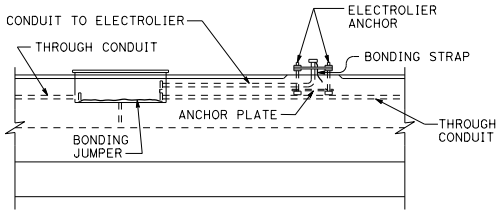

SIDE VIEW

No. 9A PULL BOX INSTALLATION

DETAIL C

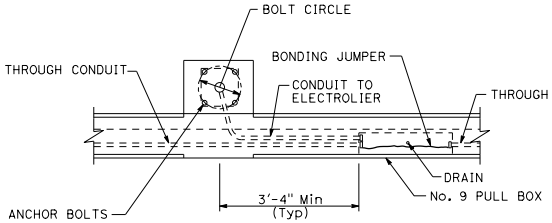

TOP VIEW

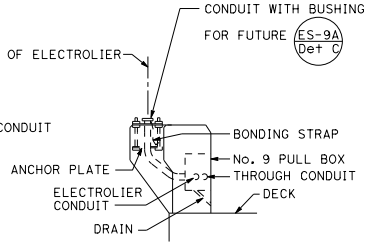

END VIEW

No. 9 PULL BOX INSTALLATION

DETAIL B

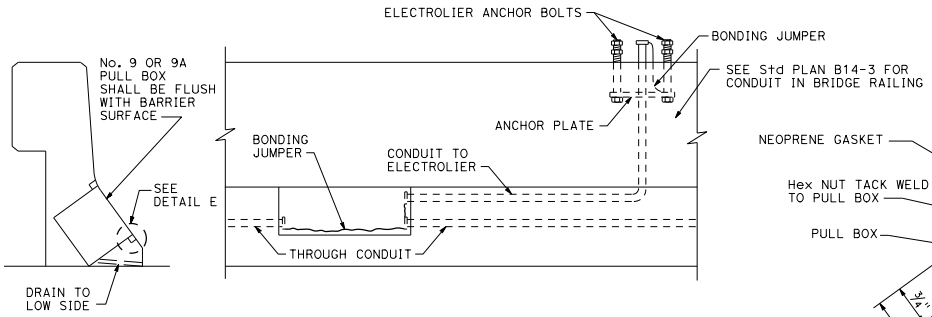

INSTALLATION IN SLOPING PARAPETS

DETAIL D

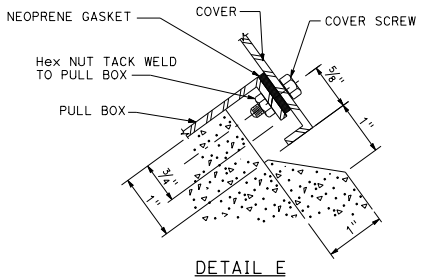

DETAIL E

Dist	COUNTY	ROUTE	POST MILES TOTAL PROJECT	SHEET No.	TOTAL SHEETS

REGISTERED ELECTRICAL ENGINEER

September 18, 2026
PLANS APPROVAL DATE

REGISTERED PROFESSIONAL ENGINEER Bhanupriya Sharma No. E23752 Exp. 12-31-27 ELECTRICAL STATE OF CALIFORNIA

THE STATE OF CALIFORNIA OR ITS OFFICERS OR AGENTS SHALL NOT BE RESPONSIBLE FOR THE ACCURACY OR COMPLETENESS OF SCANNED COPIES OF THIS PLAN SHEET.

STATE OF CALIFORNIA
DEPARTMENT OF TRANSPORTATION

ELECTRICAL SYSTEMS (STRUCTURE PULL BOX INSTALLATIONS)

NO SCALE

ES-9D

7-1-26

Return to Table of Contents

Dist	COUNTY	ROUTE	POST MILES TOTAL PROJECT	SHEET No.	TOTAL SHEETS

REGISTERED ELECTRICAL ENGINEER

September 18, 2026

PLANS APPROVAL DATE

REGISTERED PROFESSIONAL ENGINEER Bhanupriya Sharma No. E23752 Exp. 12-31-27 ELECTRICAL STATE OF CALIFORNIA

THE STATE OF CALIFORNIA OR ITS OFFICERS OR AGENTS SHALL NOT BE RESPONSIBLE FOR THE ACCURACY OR COMPLETENESS OF SCANNED COPIES OF THIS PLAN SHEET.

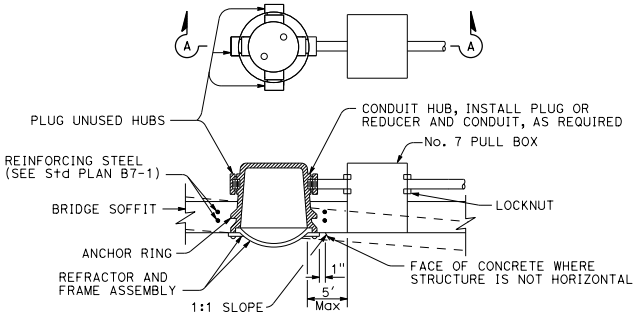

SECTION A-A

FLUSH-MOUNTED SOFFIT LUMINAIRE INSTALLATION

DETAIL F

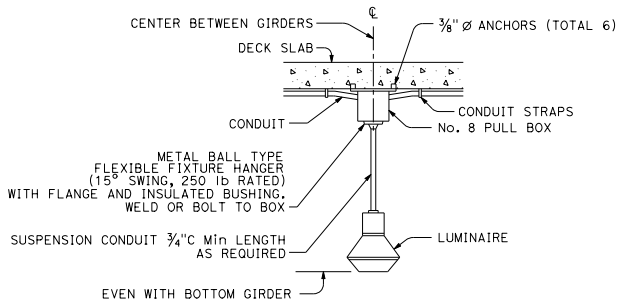

PENDANT SOFFIT LUMINAIRE INSTALLATION

DETAIL P

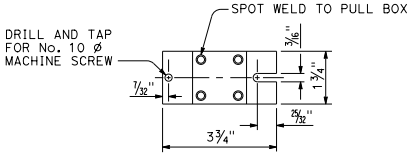

TOP VIEW

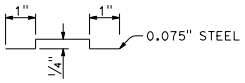

SIDE VIEW

TERMINAL BLOCK MOUNTING BRACKET

DETAIL T

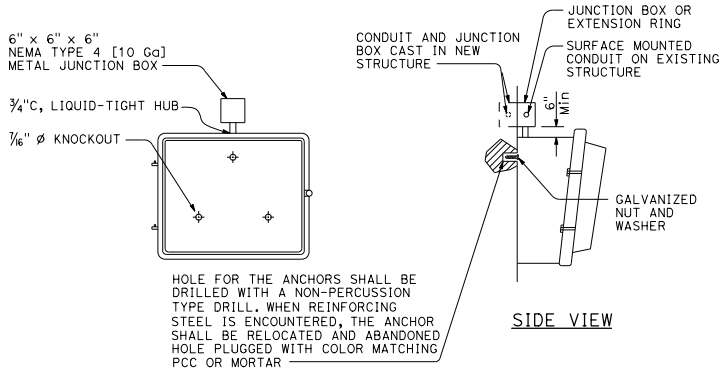

SIDE VIEW

WALL-MOUNTED LUMINAIRE INSTALLATION

DETAIL W

STATE OF CALIFORNIA
DEPARTMENT OF TRANSPORTATION

ELECTRICAL SYSTEMS (FLUSH-MOUNTED SOFFIT, PENDANT SOFFIT AND WALL-MOUNTED LUMINAIRE STRUCTURE INSTALLATIONS)

NO SCALE

ES-9E

2026 STANDARD PLAN ES-9E

600

7-1-26

Return to Table of Contents

Dist	COUNTY	ROUTE	POST MILES TOTAL PROJECT	SHEET No.	TOTAL SHEETS

REGISTERED ELECTRICAL ENGINEER

September 18, 2026
PLANS APPROVAL DATE

REGISTERED PROFESSIONAL ENGINEER Bhanupriya Sharma No. E23752 Exp. 12-31-27 ELECTRICAL STATE OF CALIFORNIA

THE STATE OF CALIFORNIA OR ITS OFFICERS OR AGENTS SHALL NOT BE RESPONSIBLE FOR THE ACCURACY OR COMPLETENESS OF SCANNED COPIES OF THIS PLAN SHEET.

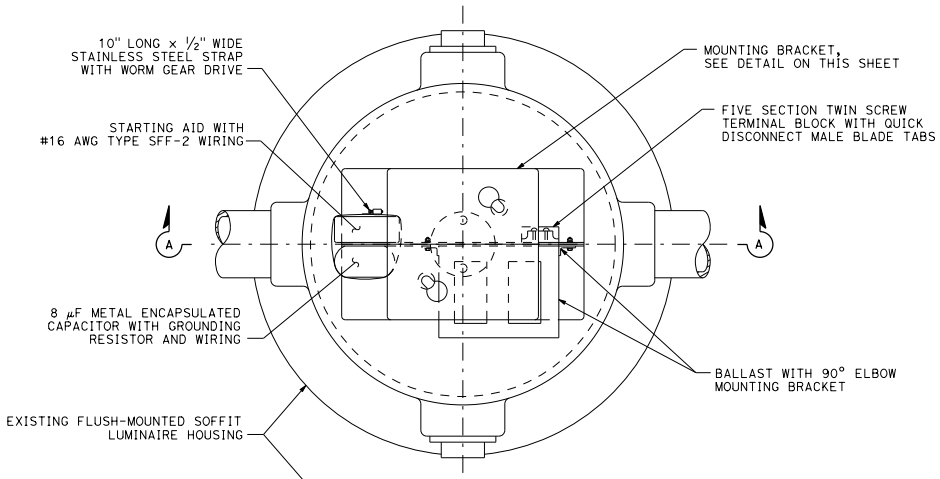

PLAN

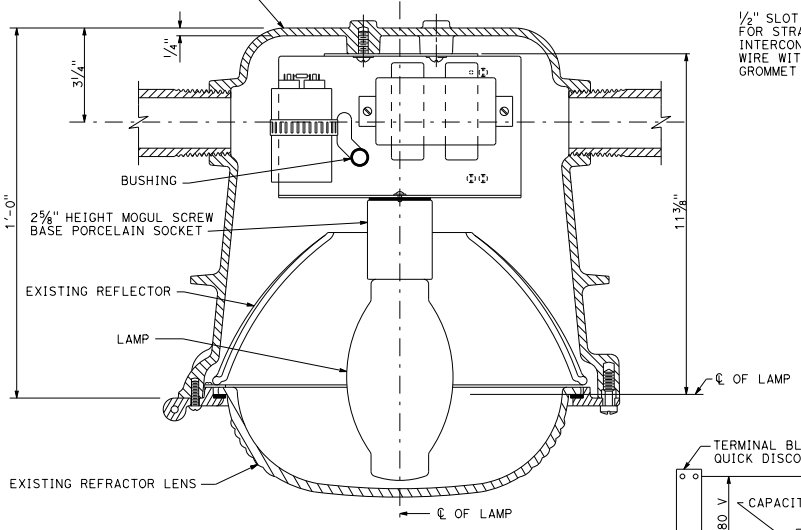

SECTION A-A

FLUSH-MOUNTED SOFFIT LUMINAIRE ASSEMBLY

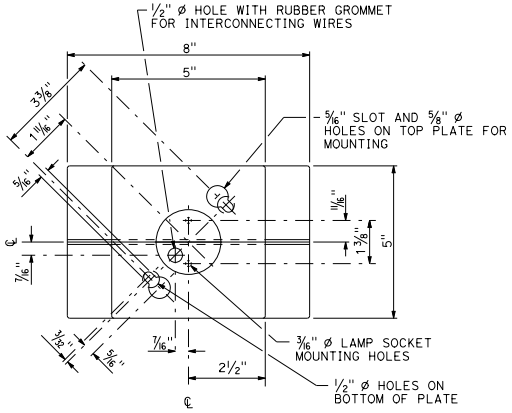

TOP VIEW

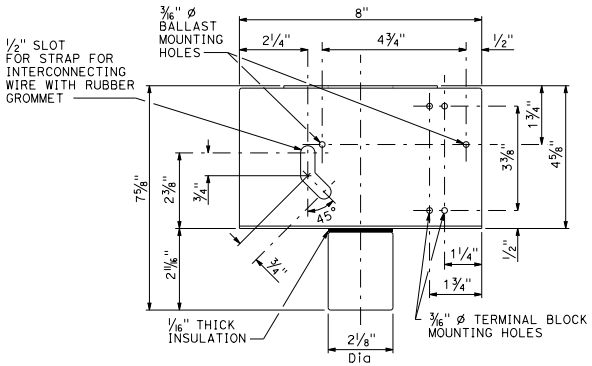

FRONT VIEW

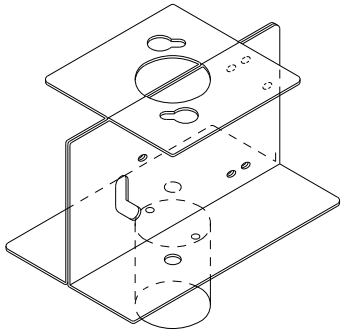

PREFORM TWO SHEETS 1/16" MILD STEEL AS SHOWN, SPOTWELD TOGETHER IN EACH CORNER WITH FOUR SPOTWELDS.

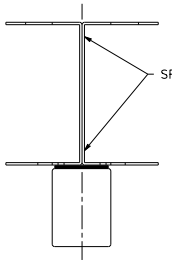

SIDE VIEW

MOUNTING BRACKET DETAILS

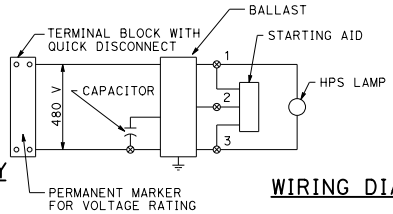

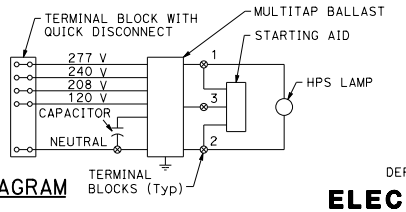

WIRING DIAGRAM

NOTE:

1. Use No. 8 ø machine screws, lockwashers and nuts for mounting ballast and terminal strips.

STATE OF CALIFORNIA
DEPARTMENT OF TRANSPORTATION

ELECTRICAL SYSTEMS (FLUSH-MOUNTED SOFFIT LUMINAIRE DETAILS)

NO SCALE

ES-9F

2026 STANDARD PLAN ES-9F

7-1-26

Return to Table of Contents

Dist	COUNTY	ROUTE	POST MILES TOTAL PROJECT	SHEET No.	TOTAL SHEETS

REGISTERED ELECTRICAL ENGINEER

September 18, 2026
PLANS APPROVAL DATE

REGISTERED PROFESSIONAL ENGINEER
Bhanupriya Sharma
No. E23752
Exp. 12-31-27
ELECTRICAL
STATE OF CALIFORNIA

THE STATE OF CALIFORNIA OR ITS OFFICERS OR AGENTS SHALL NOT BE RESPONSIBLE FOR THE ACCURACY OR COMPLETENESS OF SCANNED COPIES OF THIS PLAN SHEET.

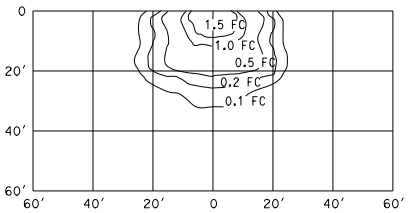

WALL-MOUNTED
15′ Mounting Height
ANSI Designation S62
Lamp operated at 5,800 lm
70 W (Max)

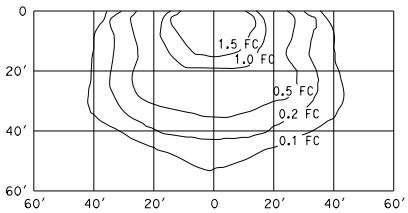

WALL-MOUNTED
15′ Mounting Height
ANSI Designation S54
Lamp operated at 9,500 lm
100 W (Max)

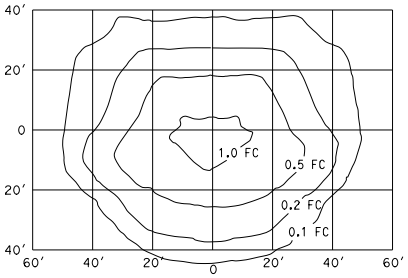

FLUSH-MOUNTED SOFFIT
17′ Mounting Height
ANSI Designation S62
Lamp operated at 5,800 lm
70 W (Max)

NOTE:
Curves represent the minimum maintained illuminance (FC).

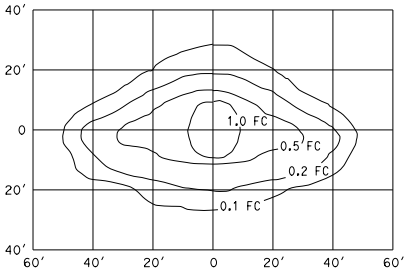

PENDANT SOFFIT
TYPE III SHORT
17′ Mounting Height
ANSI Designation S62
Lamp operated at 5,800 lm
70 W (Max)

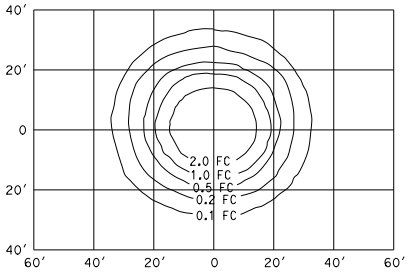

PENDANT SOFFIT
17′ Mounting Height
ANSI Designation S62
Lamp operated at 5,800 lm
70 W (Max)

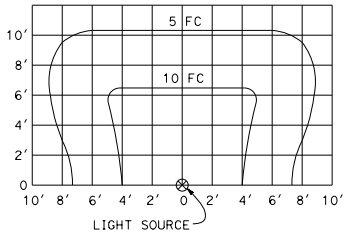

OVERHEAD SIGN LUMINAIRE
60 W (Max)

STATE OF CALIFORNIA
DEPARTMENT OF TRANSPORTATION

ELECTRICAL SYSTEMS (ISOFOOTCANDLE CURVES)

NO SCALE

ES-10B

2026 STANDARD PLAN ES-10B

7-1-26

Return to Table of Contents

Dist	COUNTY	ROUTE	POST MILES TOTAL PROJECT	SHEET No.	TOTAL SHEETS

REGISTERED CIVIL ENGINEER

September 18, 2026

PLANS APPROVAL DATE

REGISTERED PROFESSIONAL ENGINEER Mahesh Shrestha No. C80133 Exp. 9-30-26 CIVIL STATE OF CALIFORNIA

THE STATE OF CALIFORNIA OR ITS OFFICERS OR AGENTS SHALL NOT BE RESPONSIBLE FOR THE ACCURACY OR COMPLETENESS OF SCANNED COPIES OF THIS PLAN SHEET.

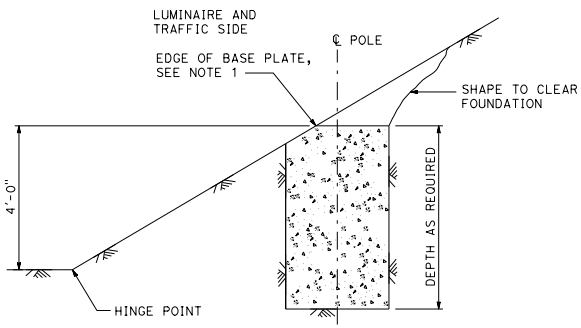

CUT SLOPES
STEEPER THAN 4:1, LESS THAN 2:1
DETAIL A-1
See Notes 2 and 3

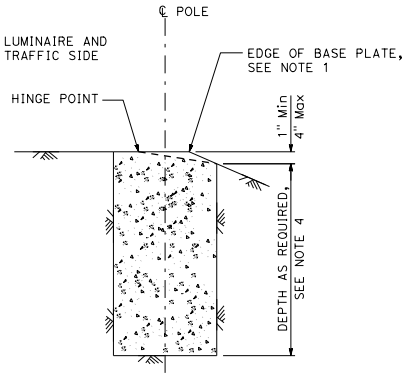

FILL SLOPES
STEEPER THAN 4:1, LESS THAN 2:1
DETAIL A-2
See Notes 2 and 3

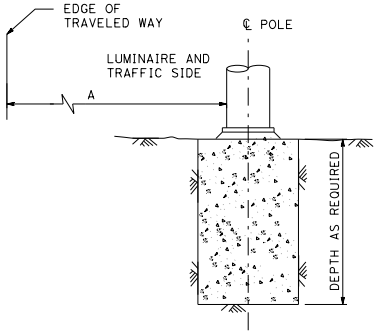

FLAT SECTIONS
CUT OR FILL SLOPES 4:1 OR FLATTER
DETAIL A-3
See Note 2

FOUNDATIONS ADJACENT TO ALL ROADWAYS EXCEPT IN SIDEWALK, MEDIAN AND ISLAND AREAS

DETAIL A

NOTES:

1. Where a portion of the foundation is above grade, the top edges shall have a 1" chamfer.
2. Slopes shall be horizontal to vertical ratio (Horizontal:Vertical).
3. Horizontal setbacks on cut and fill slopes steeper than 4:1 shall not exceed the distance shown for flat sections.
4. CIDH embedment depth shall be increased beyond standard depths by the diameter of the CIDH.

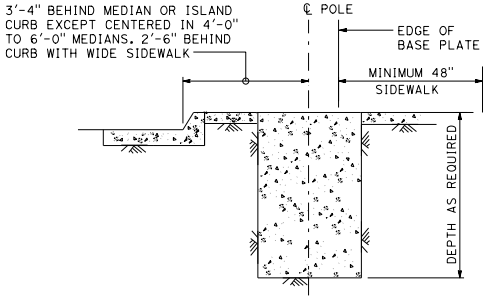

MEDIAN, ISLAND OR FRONT OF SIDEWALK
DETAIL B-1

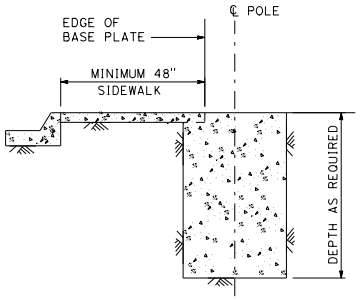

BACK OF SIDEWALK
DETAIL B-2

FOUNDATIONS IN SIDEWALK, MEDIAN AND ISLAND AREAS

DETAIL B

STANDARD TYPE	SETBACK (DIMENSION A)
32	30'-0" (Min)
31	20'-0" (Min)
15, 15D, 15-SB, 21, 21D, 30	ARM LENGTH (Min)

STATE OF CALIFORNIA
DEPARTMENT OF TRANSPORTATION

ELECTRICAL SYSTEMS (FOUNDATION INSTALLATIONS)

NO SCALE

ES-11

7-1-26

2026 STANDARD PLAN ES-11

Return to Table of Contents

Dist	COUNTY	ROUTE	POST MILES TOTAL PROJECT	SHEET No.	TOTAL SHEETS

REGISTERED ELECTRICAL ENGINEER

September 18, 2026
PLANS APPROVAL DATE

REGISTERED PROFESSIONAL ENGINEER Bhanupriya Sharma No. E23752 Exp. 12-31-27 ELECTRICAL STATE OF CALIFORNIA

THE STATE OF CALIFORNIA OR ITS OFFICERS OR AGENTS SHALL NOT BE RESPONSIBLE FOR THE ACCURACY OR COMPLETENESS OF SCANNED COPIES OF THIS PLAN SHEET.

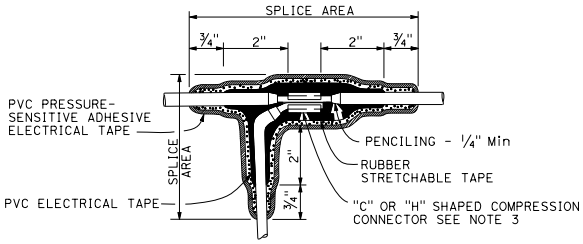

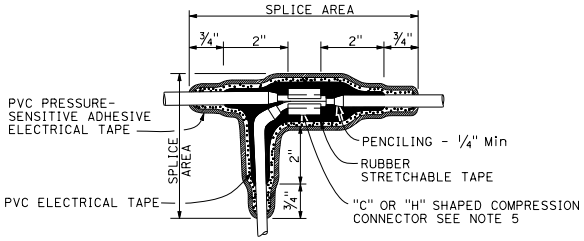

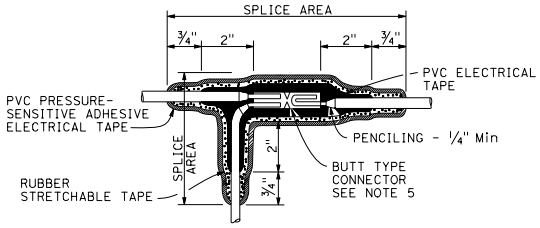

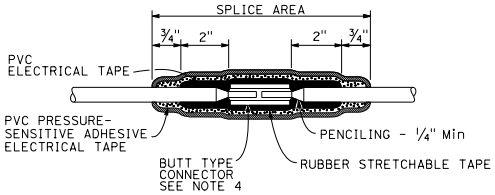

NOTES:

1. Dimensions are minimum.
2. Rubber tapes shall be rolled after application.
3. Between 1 free-end and 1 through conductor.
4. Between 2 free-end conductors.
5. Between 3 free-end conductors.

TYPICAL SPLICE INSULATION METHOD B

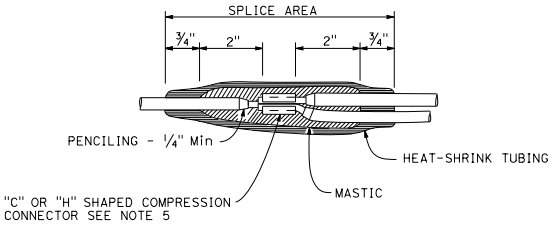

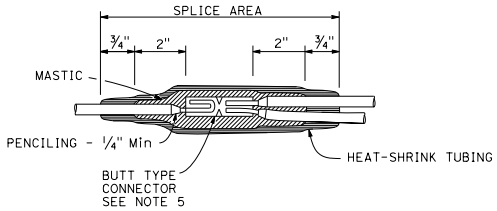

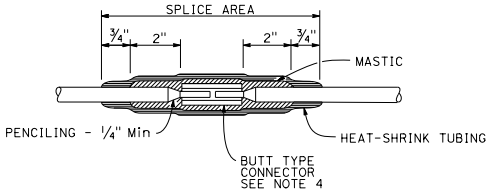

TYPICAL SPLICE INSULATION HEAT-SHRINK TUBING

STATE OF CALIFORNIA
DEPARTMENT OF TRANSPORTATION

ELCTRICAL SYSTEMS
(SPLICE INSULATION METHODS DETAILS)

NO SCALE

ES-13A

2026 STANDARD PLAN ES-13A

7-1-26

Return to Table of Contents

Dist	COUNTY	ROUTE	POST MILES TOTAL PROJECT	SHEET No.	TOTAL SHEETS

REGISTERED ELECTRICAL ENGINEER

September 18, 2026

PLANS APPROVAL DATE

REGISTERED PROFESSIONAL ENGINEER Bhanupriya Sharma No. E23752 Exp. 12-31-27 ELECTRICAL STATE OF CALIFORNIA

THE STATE OF CALIFORNIA OR ITS OFFICERS OR AGENTS SHALL NOT BE RESPONSIBLE FOR THE ACCURACY OR COMPLETENESS OF SCANNED COPIES OF THIS PLAN SHEET.

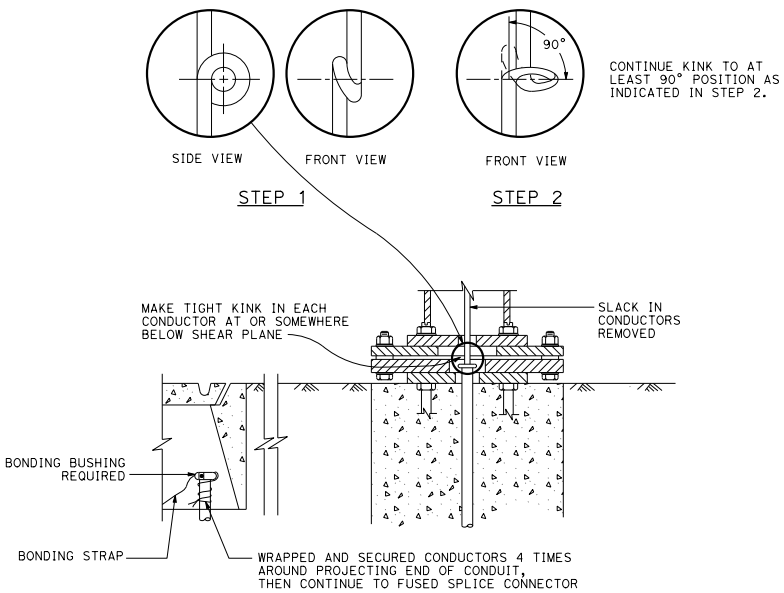

KINKING DETAIL FOR SLIP BASE STANDARDS

DETAIL A

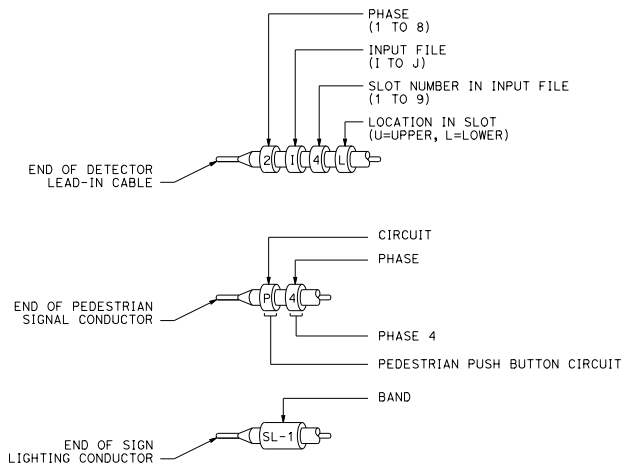

TYPICAL BANDING DETAILS

DETAIL B

STATE OF CALIFORNIA
DEPARTMENT OF TRANSPORTATION

ELECTRICAL SYSTEMS (KINKING AND BANDING DETAIL)

NO SCALE

ES-13B

2026 STANDARD PLAN ES-13B

7-1-26

Return to Table of Contents

Dist	COUNTY	ROUTE	POST MILES TOTAL PROJECT	SHEET No.	TOTAL SHEETS

REGISTERED ELECTRICAL ENGINEER

September 18, 2026
PLANS APPROVAL DATE

REGISTERED PROFESSIONAL ENGINEER Bhanupriya Sharma No. E23752 Exp. 12-31-27 ELECTRICAL STATE OF CALIFORNIA

THE STATE OF CALIFORNIA OR ITS OFFICERS OR AGENTS SHALL NOT BE RESPONSIBLE FOR THE ACCURACY OR COMPLETENESS OF SCANNED COPIES OF THIS PLAN SHEET.

NOTES:

1. Sheet metal shall be 1/8".
2. Welds shall be continuous.
3. Powder coat all internal and external surfaces black.
4. The door frame shall utilize two gas spring lift arms and two latching devices to maintain an open position.
5. See Wiring Notes and Symbols on Standard Plan ES-14B, Detail A.

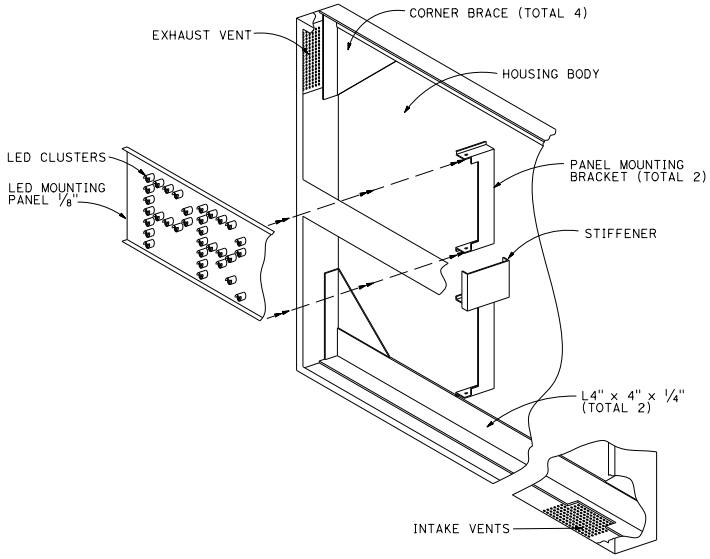

ISOMETRIC VIEW

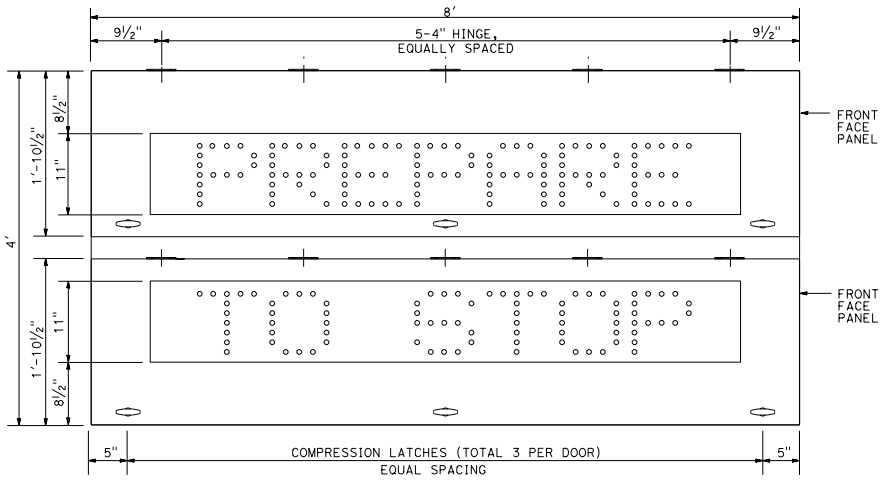

TYPICAL FRONT VIEW OF SIGN UNIT

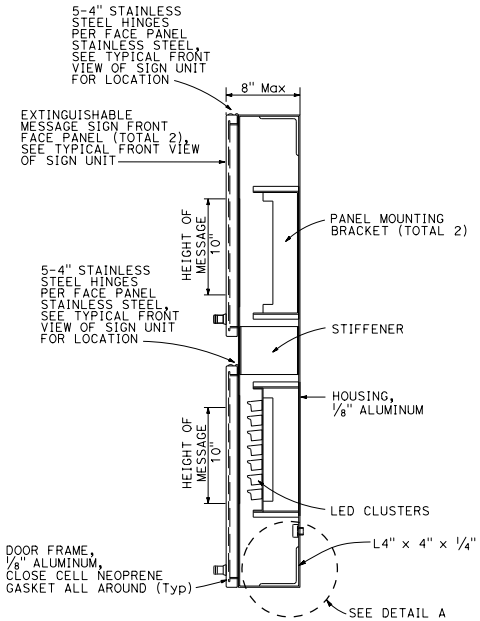

CROSS-SECTION OF SIGN

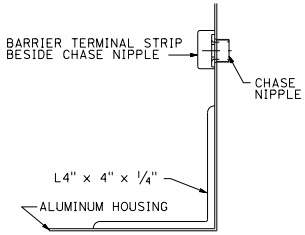

DETAIL A

STATE OF CALIFORNIA
DEPARTMENT OF TRANSPORTATION

ELECTRICAL SYSTEMS (EXTINGUISHABLE MESSAGE SIGN 10" LETTERS)

NO SCALE

ES-14A

2026 STANDARD PLAN ES-14A

7-1-26

Return to Table of Contents

Dist	COUNTY	ROUTE	POST MILES TOTAL PROJECT	SHEET No.	TOTAL SHEETS

REGISTERED ELECTRICAL ENGINEER

September 18, 2026

PLANS APPROVAL DATE

REGISTERED PROFESSIONAL ENGINEER Bhanupriya Sharma No. E23752 Exp. 12-31-27 ELECTRICAL STATE OF CALIFORNIA

THE STATE OF CALIFORNIA OR ITS OFFICERS OR AGENTS SHALL NOT BE RESPONSIBLE FOR THE ACCURACY OR COMPLETENESS OF SCANNED COPIES OF THIS PLAN SHEET.

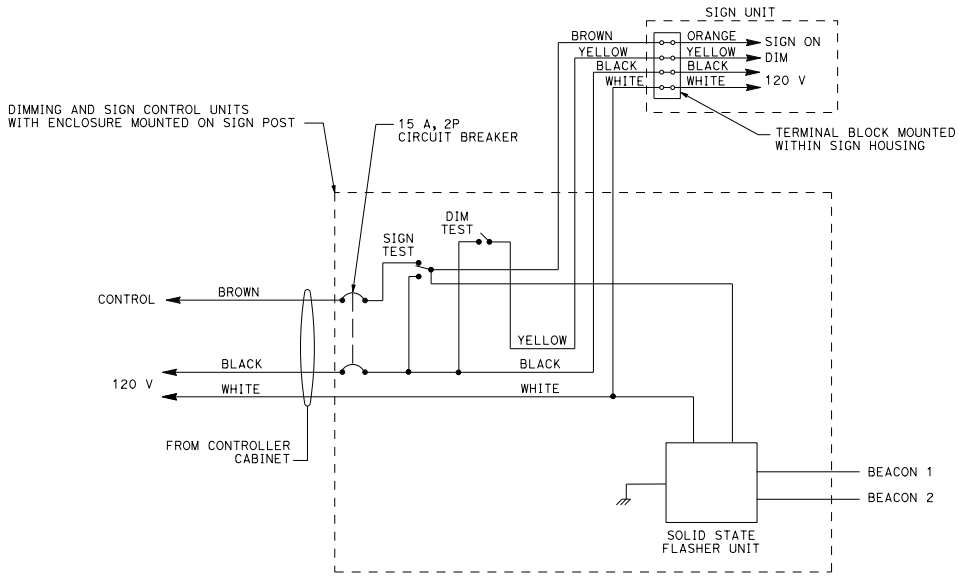

WIRING DIAGRAM
EXTINGUISHABLE MESSAGE SIGN
DETAIL A

THE FLASHER SHALL MATE WITH A CINCH-JONES SOCKET S-406-SB OR EQUAL AND CONNECTED AS FOLLOWS:

PIN	CIRCUIT	PIN	CIRCUIT
7	LOAD	10	NEUTRAL
8	LOAD	11	LINE
9	CHASSIS GROUND	12	NOT USED

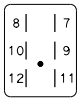

CONNECTOR SOCKET
SOLID STATE FLASHER UNIT

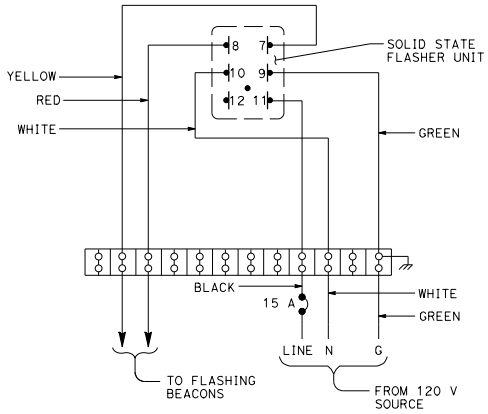

WIRING DIAGRAM
FLASHING BEACON ENCLOSURE
DETAIL B

STATE OF CALIFORNIA
DEPARTMENT OF TRANSPORTATION

ELECTRICAL SYSTEMS
(EMS AND FBE WIRING DIAGRAMS)

NO SCALE

ES-14B

2026 STANDARD PLAN ES-14B

7-1-26

Return to Table of Contents

Dist	COUNTY	ROUTE	POST MILES TOTAL PROJECT	SHEET No.	TOTAL SHEETS

REGISTERED CIVIL ENGINEER

September 18, 2026
PLANS APPROVAL DATE

REGISTERED PROFESSIONAL ENGINEER
Mahesh Shrestha
No. C80133
Exp. 9-30-26
CIVIL
STATE OF CALIFORNIA

THE STATE OF CALIFORNIA OR ITS OFFICERS OR AGENTS SHALL NOT BE RESPONSIBLE FOR THE ACCURACY OR COMPLETENESS OF SCANNED COPIES OF THIS PLAN SHEET.

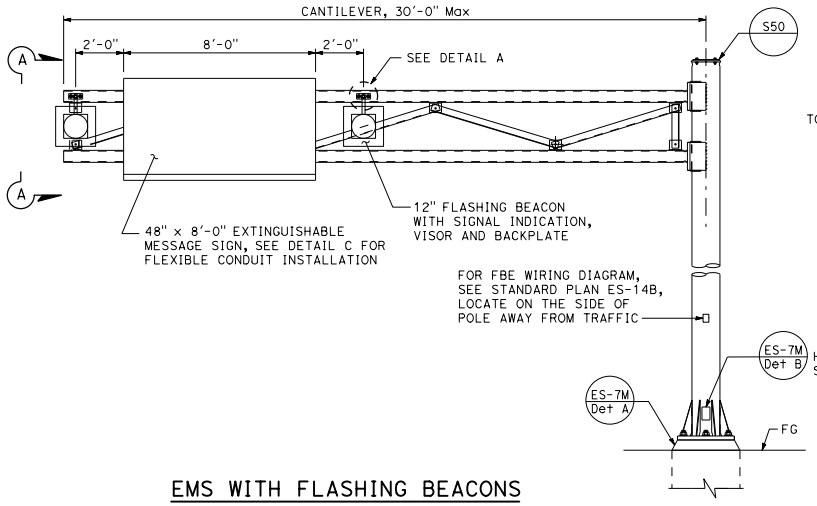

EMS WITH FLASHING BEACONS

ELEVATION A

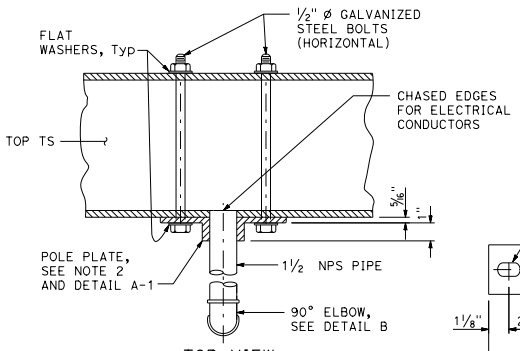

TOP VIEW

SECTION B-B

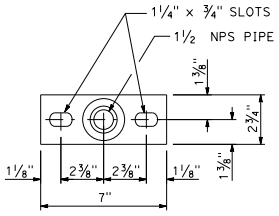

DETAIL A-1

POLE PLATE

DETAIL A

NOTES:

1. Pole plate shall be bronze or galvanized ductile iron.
2. For structure information, see Standard Plan S50.
3. Wind loading (3-second gust): 100 mph.
4. Handhole shall be located on the downstream side of traffic.

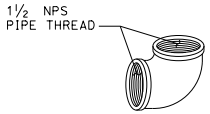

90° ELBOW

DETAIL B

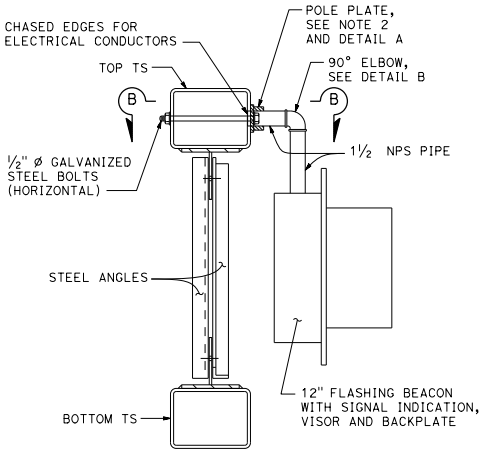

SECTION A-A

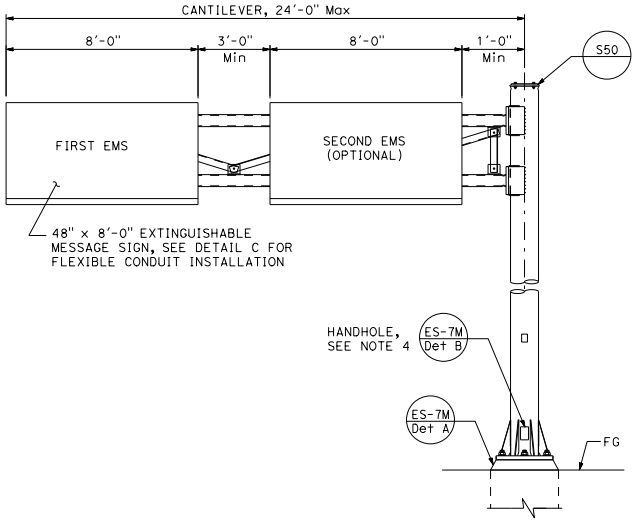

EMS WITHOUT FLASHING BEACONS

ELEVATION B

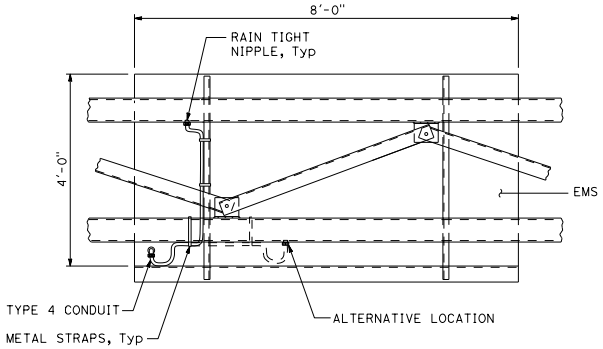

FLEXIBLE CONDUIT INSTALLATION

DETAIL C

Back view of sign

STATE OF CALIFORNIA
DEPARTMENT OF TRANSPORTATION

ELECTRICAL SYSTEMS (EXTINGUISHABLE MESSAGE SIGN ON A FULL CANTILEVER)

NO SCALE

ES-14C

2026 STANDARD PLAN ES-14C

7-1-26

Return to Table of Contents

LENGTH OF SIGN PANEL	NUMBER OF OVERHEAD SIGN LUMINAIRE (EACH)	OVERHEAD SIGN LUMINAIRE SPACING SEE NOTES
5'-0"	1	2'-6"
6'-0"		3'-0"
7'-0"		3'-6"
8'-0"		4'-0"
9'-0"		4'-6"
10'-0"		5'-0"
11'-0"		5'-6"
12'-0"		6'-0"
13'-0"		6'-6"
14'-0"		7'-0"
15'-0"		7'-6"
16'-0"		8'-0"
17'-0"	2	4'-3":8'-6"
18'-0"		4'-6":9'-0"
19'-0"		4'-9':9'-6"
20'-0"		5'-0":10'-0"
21'-0"		5'-3":10'-6"
22'-0"		5'-6":11'-0"
23'-0"		5'-9':11'-6"
24'-0"		6'-0":12'-0"
25'-0"		6'-3":12'-6"
26'-0"		6'-6":13'-0"
27'-0"		6'-9':13'-6"
28'-0"		7'-0":14'-0"
29'-0"		7'-3":14'-6"
30'-0"		7'-6":15'-0"
31'-0"		7'-9":15'-6"
32'-0"		8'-0":16'-0"
33'-0"	3	5'-6":11'-0"
34'-0"		5'-8":11'-4"
35'-0"		5'-10":11'-8"
36'-0"		6'-0":12'-0"
37'-0"		6'-2":12'-4"
38'-0"		6'-4":12'-8"
39'-0"		6'-6":13'-0"
40'-0"		6'-8":13'-4"
41'-0"		6'-10":13'-8"
42'-0"		7'-0":14'-0"
43'-0"		7'-2":14'-4"
44'-0"		7'-4":14'-8"
45'-0"		7'-6":15'-0"
46'-0"		7'-8":15'-4"
47'-0"		7'-10":15'-8"
48'-0"		8'-0"-16'-0"
49'-0"	4	6'-1½":12'-3"
50'-0"		6'-3":12'-6"
51'-0"		6'-4½":12'-9"
52'-0"		6'-6":13'-0"
53'-0"		6'-7½":13'-3"
54'-0"		6'-9":13'-6"
55'-0"		6'-10½":13'-9"
56'-0"		7'-0":14'-0"
57'-0"		7'-1½":14'-3"
58'-0"		7'-3":14'-6"
59'-0"		7'-4½":14'-9"
60'-0"		7'-6":15'-0"
61'-0"		7'-7½":15'-3"
62'-0"		7'-9":15'-6"
63'-0"		7'-10½":15'-9"
64'-0"		8'-0":16'-0"

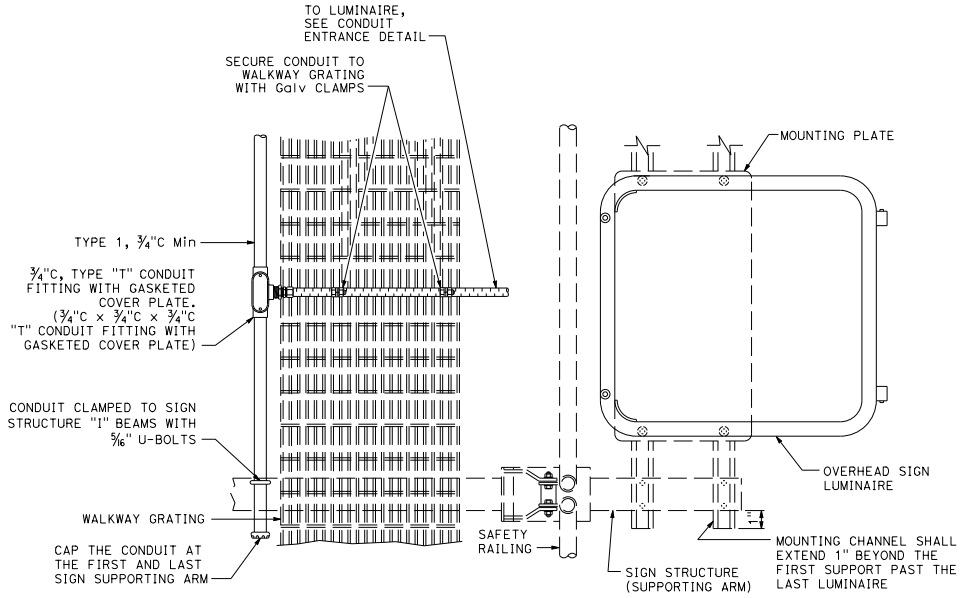

TOP VIEW

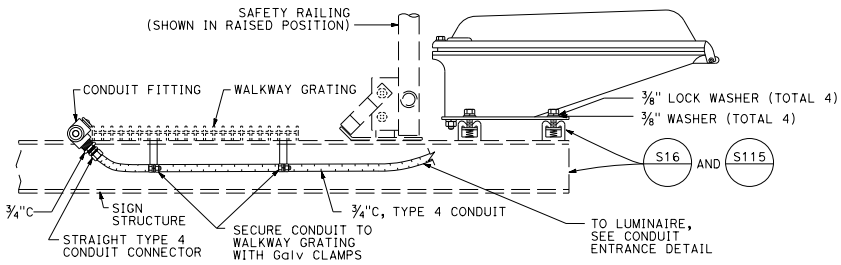

ALL BOLTS, NUTS, WASHERS AND OTHER HARDWARE SHALL BE SAE GRADE 5 AND CADMIUM-PLATED.

SIDE VIEW

OVERHEAD SIGN LUMINAIRE MOUNTING DETAIL (TYPICAL)

NOTES:

1. The first number listed is the dimension from the edge of the sign panel to the center of the end-most sign luminaire. The second number listed is the dimension between centers of successive sign luminaire.
2. Where adjacent sign panels are spaced 1'-0" or less the combination of these panels (and spaces) shall be considered a single panel.
3. Physical configuration and mounting details may vary from what is shown.

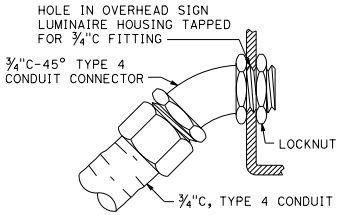

CONDUIT ENTRANCE DETAIL

Dist	COUNTY	ROUTE	POST MILES TOTAL PROJECT	SHEET No.	TOTAL SHEETS

REGISTERED ELECTRICAL ENGINEER

September 18, 2026
PLANS APPROVAL DATE

REGISTERED PROFESSIONAL ENGINEER Bhanupriya Sharma No. E23752 Exp. 12-31-27 ELECTRICAL STATE OF CALIFORNIA

THE STATE OF CALIFORNIA OR ITS OFFICERS OR AGENTS SHALL NOT BE RESPONSIBLE FOR THE ACCURACY OR COMPLETENESS OF SCANNED COPIES OF THIS PLAN SHEET.

STATE OF CALIFORNIA
DEPARTMENT OF TRANSPORTATION

ELECTRICAL SYSTEMS (SIGN ILLUMINATION EQUIPMENT)

NO SCALE

ES-15A

2026 STANDARD PLAN ES-15A

7-1-26

Return to Table of Contents

Dist	COUNTY	ROUTE	POST MILES TOTAL PROJECT	SHEET No.	TOTAL SHEETS

REGISTERED ELECTRICAL ENGINEER

September 18, 2026

PLANS APPROVAL DATE

REGISTERED PROFESSIONAL ENGINEER Bhanupriya Sharma No. E23752 Exp. 12-31-27 ELECTRICAL STATE OF CALIFORNIA

THE STATE OF CALIFORNIA OR ITS OFFICERS OR AGENTS SHALL NOT BE RESPONSIBLE FOR THE ACCURACY OR COMPLETENESS OF SCANNED COPIES OF THIS PLAN SHEET.

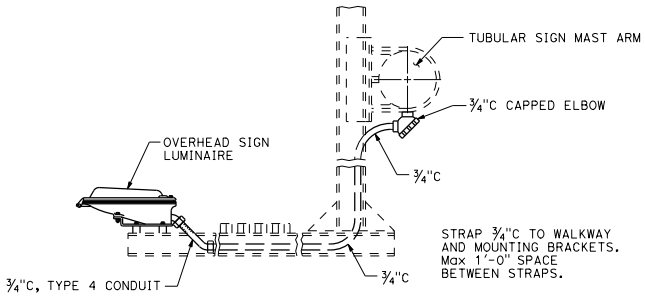

TYPICAL SIGN ILLUMINATION EQUIPMENT
INSTALLATION FOR OVERHEAD SIGNS TUBULAR

DETAIL A

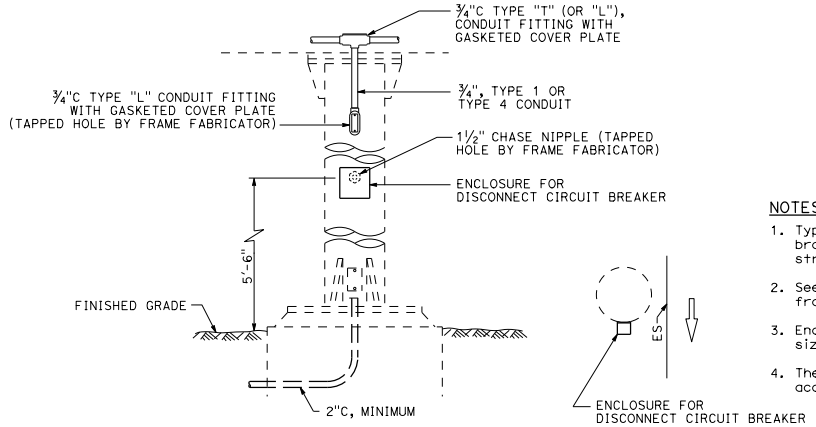

TYPICAL SIGN ILLUMINATION EQUIPMENT
INSTALLATION FOR OVERHEAD SIGNS ROUND POST

DETAIL B

NOTES:

1. Type 4 conduit shall be secured to the nearest walkway bracket using one-hole galvanized malleable iron or steel straps and brass machine screws tapped into the bracket.
2. See Overhead Signs Standard Plans for overhead signs and frame juncture details for photoelectric unit installation.
3. Enclosures and straps shall be secured by ⅜" maximum size screws.
4. The contactor and test switch enclosures shall be readily accessible from the sign walkway.

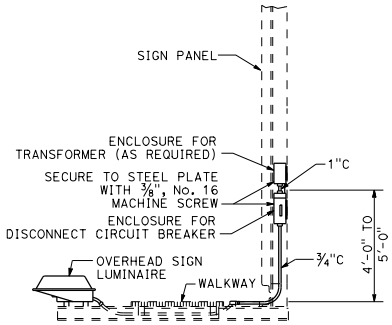

SIDE VIEW

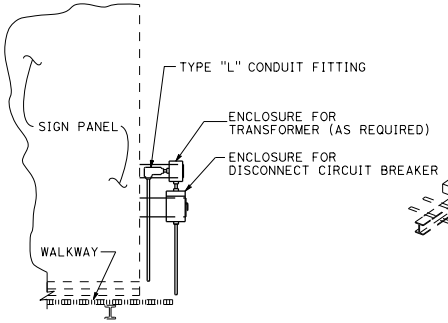

FRONT VIEW

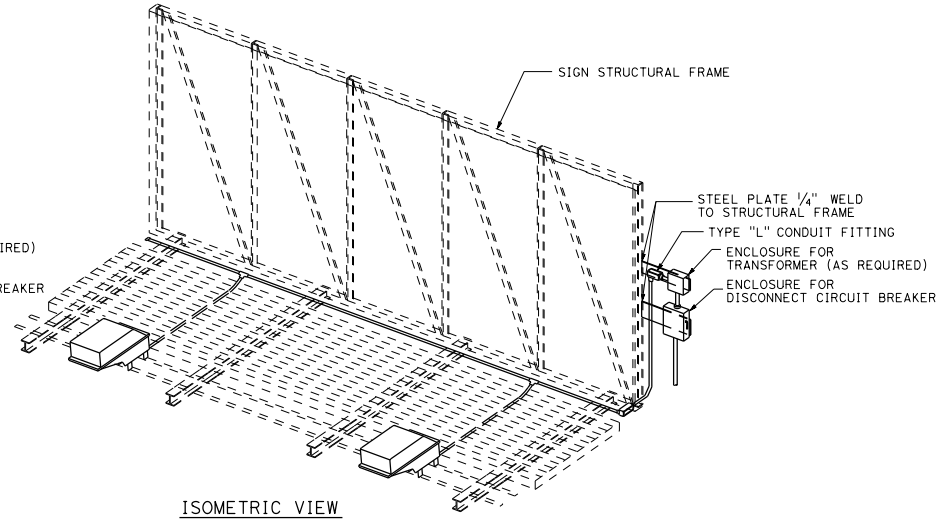

ISOMETRIC VIEW

TYPICAL SIGN ILLUMINATION EQUIPMENT
INSTALLATION FOR OVERHEAD SIGNS
BRIDGE MOUNTED

DETAIL C
See Note 4

STATE OF CALIFORNIA
DEPARTMENT OF TRANSPORTATION

ELECTRICAL SYSTEMS
(SIGN ILLUMINATION EQUIPMENT)

NO SCALE

ES-15C

7-1-26

2026 STANDARD PLAN ES-15C

Return to Table of Contents

Dist	COUNTY	ROUTE	POST MILES TOTAL PROJECT	SHEET No.	TOTAL SHEETS

REGISTERED ELECTRICAL ENGINEER

September 18, 2026
PLANS APPROVAL DATE

REGISTERED PROFESSIONAL ENGINEER Bhanupriya Sharma No. E23752 Exp. 12-31-27 ELECTRICAL STATE OF CALIFORNIA

THE STATE OF CALIFORNIA OR ITS OFFICERS OR AGENTS SHALL NOT BE RESPONSIBLE FOR THE ACCURACY OR COMPLETENESS OF SCANNED COPIES OF THIS PLAN SHEET.

NOTE:

1. Type SC1A, SC2A, SC3A controls are similar to Types SC1, SC2 and SC controls respectively except test switch and wiring are not required.

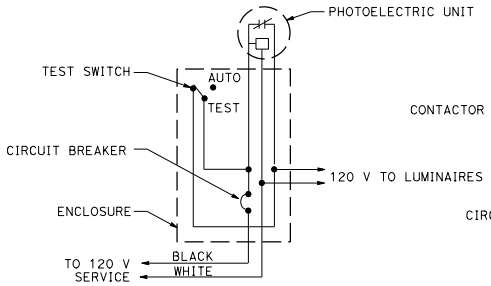

TYPE LC1 CONTROL

For 120 V unswitched circuit with no more than 1000 W load.

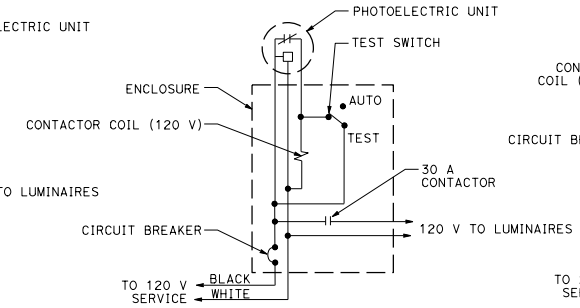

TYPE LC2 CONTROL

For 120 V unswitched circuit

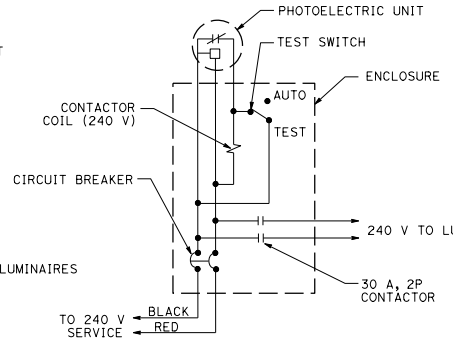

TYPE LC3 CONTROL

For 240 V unswitched circuits

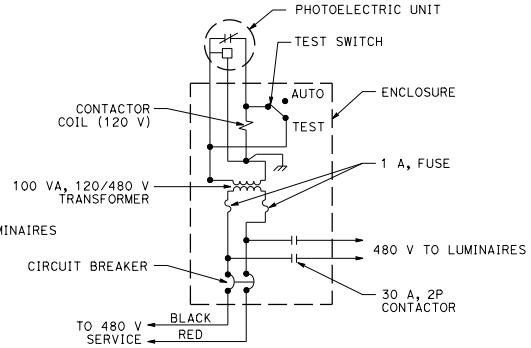

TYPE LC4 CONTROL

For 480 V unswitched circuits

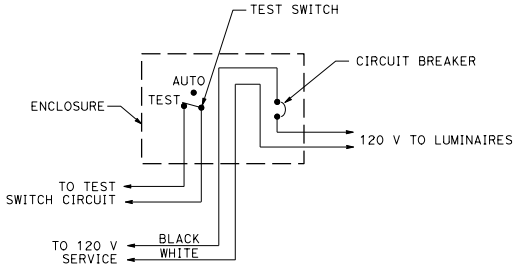

TYPE SC1 CONTROL

For 120 V switched circuit, see Note 1 for Type SC1A

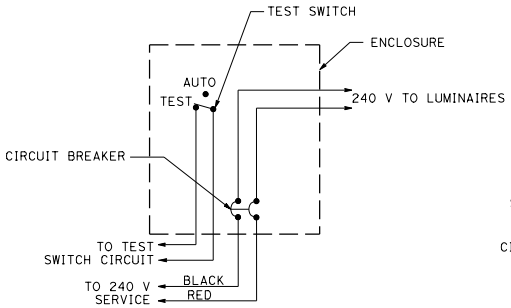

TYPE SC2 CONTROL

For 240 V switched circuit, see Note 1 for Type SC2A

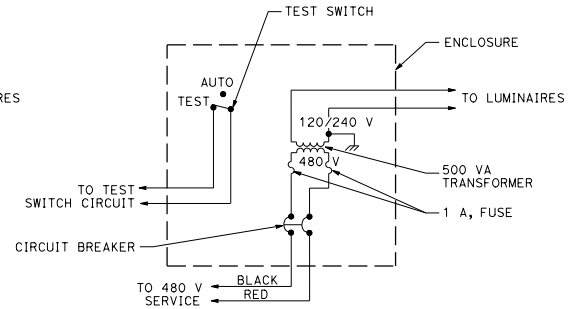

TYPE SC3 CONTROL

For 480 V switched sign circuit, see Note 1 for Type SC3A

STATE OF CALIFORNIA
DEPARTMENT OF TRANSPORTATION

ELECTRICAL SYSTEMS (LIGHTING AND SIGN ILLUMINATION CONTROL)

NO SCALE

ES-15D

2026 STANDARD PLAN ES-15D

7-1-26

Return to Table of Contents

Dist	COUNTY	ROUTE	POST MILES TOTAL PROJECT	SHEET No.	TOTAL SHEETS

REGISTERED CIVIL ENGINEER

September 18, 2026

PLANS APPROVAL DATE

REGISTERED PROFESSIONAL ENGINEER Mahesh Shrestha No. C80133 Exp. 9-30-26 CIVIL STATE OF CALIFORNIA

THE STATE OF CALIFORNIA OR ITS OFFICERS OR AGENTS SHALL NOT BE RESPONSIBLE FOR THE ACCURACY OR COMPLETENESS OF SCANNED COPIES OF THIS PLAN SHEET.

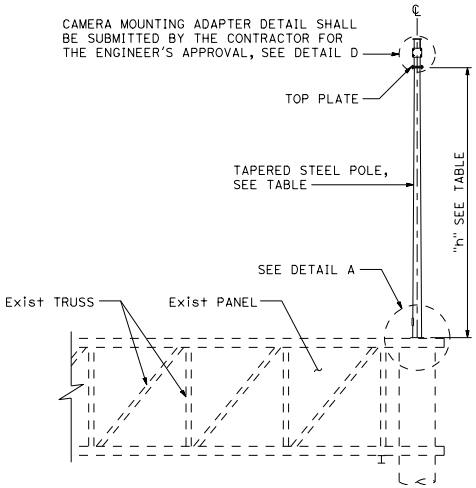

ELEVATION A

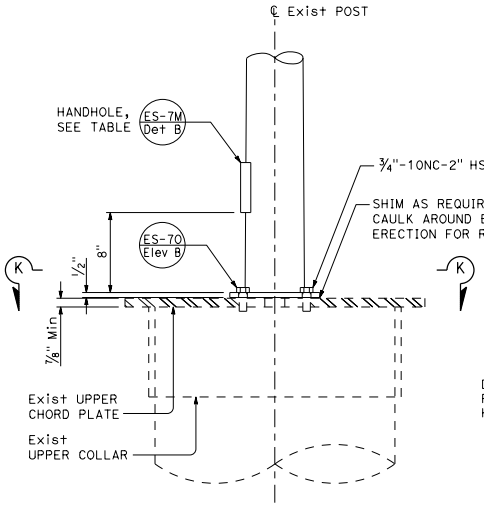

DETAIL A

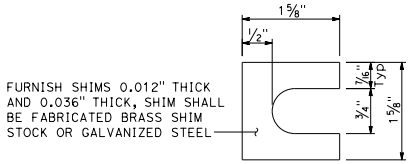

SHIM

DETAIL B

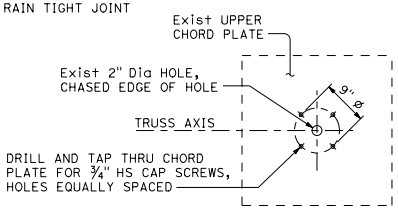

UPPER CHORD PLATE

DETAIL C

See Note 3

NOTES:

1. Verify controlling field dimensions before ordering or fabricating any material.
2. Bolt hole locations may vary at the discretion of the Engineer.
3. For additional information, see Standard Plan S113.
4. For wind loading, see Standard Plan ES-7M.
5. Materials (Structural Steel):
   a. fy = 55,000 psi (tapered steel tube)
   b. fy = 50,000 psi (unless otherwise noted)

POLE EXTENSION TYPE	POLE DATA				HANDHOLE SIZE
	HEIGHT "h"	Min OD		THICKNESS	
		BASE	TOP		
CAMERA POLE 5	5′	4 9/16"	3¾"	0.1793"	3" x 5"
CAMERA POLE 10	10′	5¼"			
CAMERA POLE 15	15′	5 15/16"			

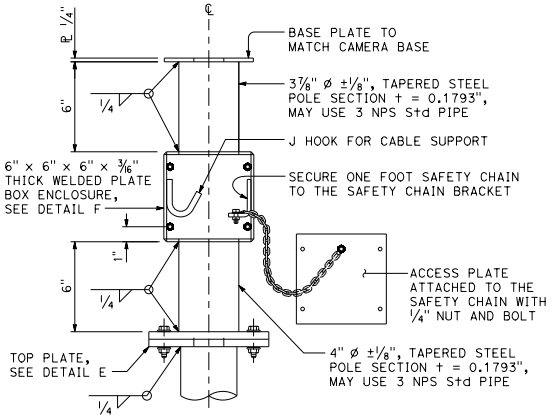

CAMERA MOUNTING ADAPTER

DETAIL D

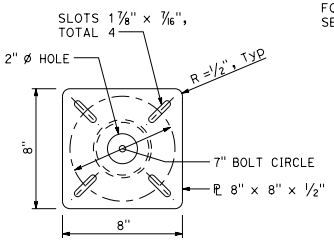

TOP PLATE

DETAIL E

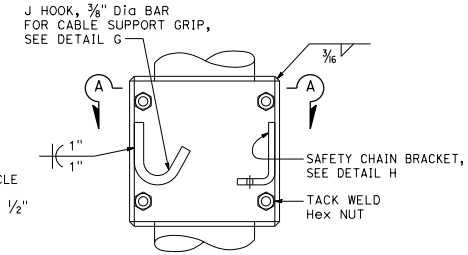

BOX ENCLOSURE

DETAIL F

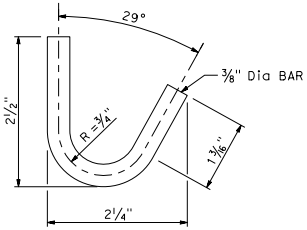

J HOOK

DETAIL G

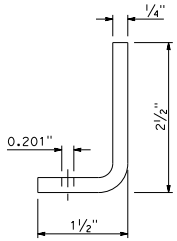

SAFETY CHAIN BRACKET

DETAIL H

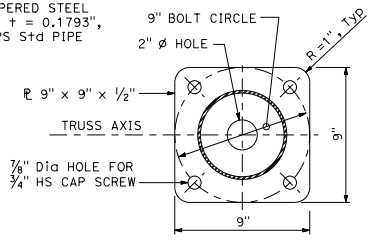

SECTION K-K

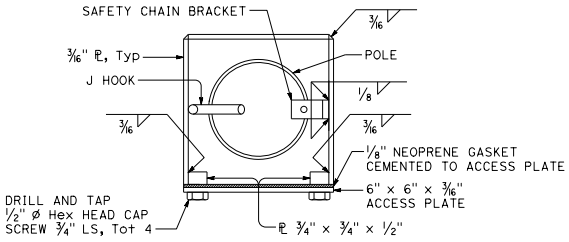

SECTION A-A

STATE OF CALIFORNIA
DEPARTMENT OF TRANSPORTATION

ELECTRICAL SYSTEMS (CAMERA POLE 5' TO 15' OVERHEAD SIGN MOUNTED)

NO SCALE

ES-16A

2026 STANDARD PLAN ES-16A

7-1-26

Return to Table of Contents

POLE TYPE	POLE DATA				BASE PLATE DATA				CIDH	
	HEIGHT "h"	Min OD BASE	Min OD TOP	THICKNESS	"C"	THICKNESS	ANCHOR BOLT SIZE	BC	Dia	"d"
CAMERA POLE 25	25′	7⅜"	3¾"	0.1793"	1′-1"	1"	1½" ø x 36"	11½"	2′-6"	7′-0"
CAMERA POLE 30	30′	8"			1′-1½"			1′-0"		7′-6"
CAMERA POLE 35	35′	8⅝"			1′-2"			1′-1"		8′-0"
CAMERA POLE 40	40′	9⅜"			1′-3"			1′-1½"		8′-6"
CAMERA POLE 45	45′	10"						1′-2"		

Dist	COUNTY	ROUTE	POST MILES TOTAL PROJECT	SHEET No.	TOTAL SHEETS

REGISTERED CIVIL ENGINEER

September 18, 2026

PLANS APPROVAL DATE

REGISTERED PROFESSIONAL ENGINEER Mahesh Shrestha No. C80133 Exp. 9-30-26 CIVIL STATE OF CALIFORNIA

THE STATE OF CALIFORNIA OR ITS OFFICERS OR AGENTS SHALL NOT BE RESPONSIBLE FOR THE ACCURACY OR COMPLETENESS OF SCANNED COPIES OF THIS PLAN SHEET.

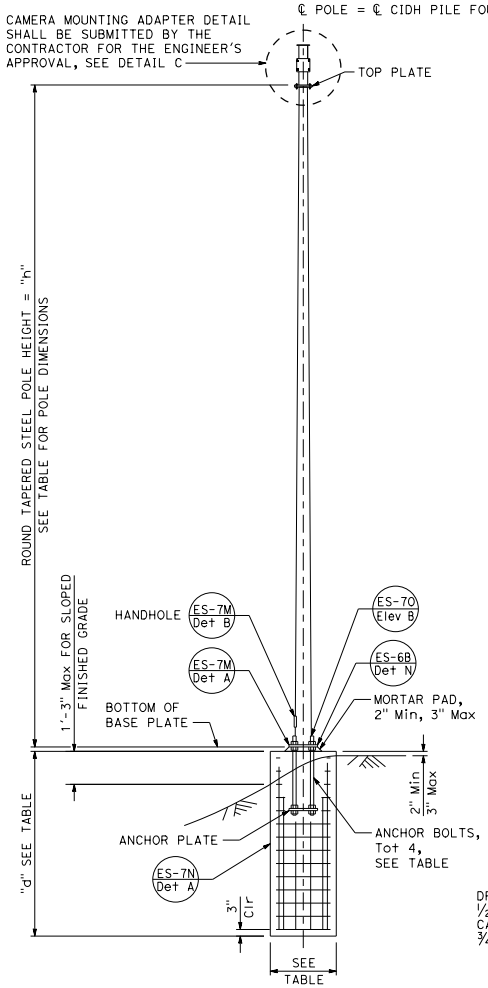

ELEVATION A

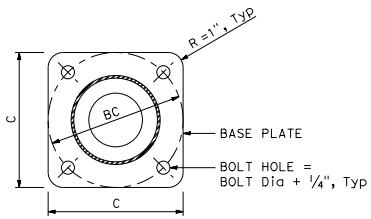

BASE PLATE

DETAIL A

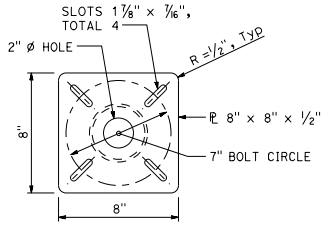

TOP PLATE

DETAIL B

NOTES:

1. Verify controlling field dimensions before ordering or fabricating any material.
2. During pole installation, the post shall be raked as necessary with the use of leveling nuts to provide a plumb pole axis.
3. For wind loading, see Standard Plan ES-7M.
4. Materials (Structural Steel):
   a. fy = 55,000 psi (tapered steel tube and anchor bolts)
   b. fy = 50,000 psi (unless otherwise noted)
5. Materials (Reinforced Concrete):
   a. f′c = 3,625 psi
   b. fy = 60,000 psi

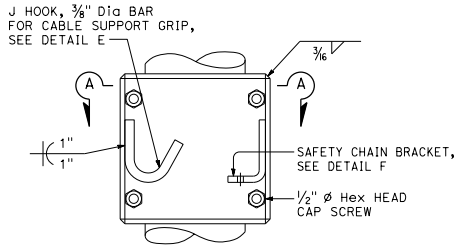

BOX ENCLOSURE

DETAIL D

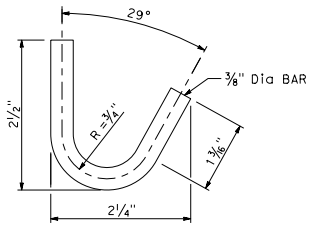

J HOOK

DETAIL E

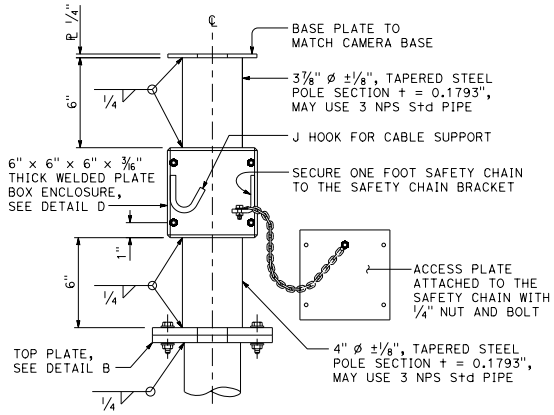

DETAIL C

CAMERA MOUNTING ADAPTER

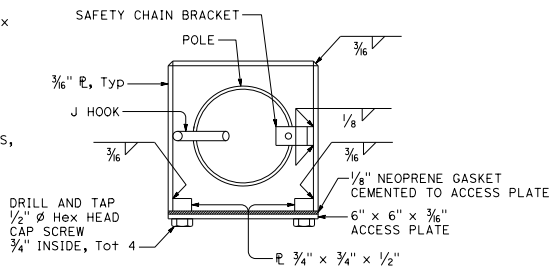

SECTION A-A

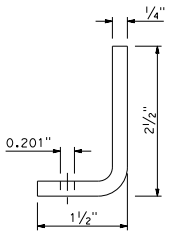

DETAIL F

SAFETY CHAIN BRACKET

STATE OF CALIFORNIA
DEPARTMENT OF TRANSPORTATION

ELECTRICAL SYSTEMS (CAMERA POLE 25' TO 45')

NO SCALE

ES-16B

2026 STANDARD PLAN ES-16B

7-1-26

Return to Table of Contents

POLE TYPE	POLE DATA					BASE PLATE DATA					CIDH PILE DATA	
	HEIGHT "h"	Min OD		THICKNESS BOTTOM SEGMENT (Min 25' LONG)	Min THICKNESS UPPER SEGMENT(S)	Dia	THICKNESS	ANCHOR BOLT SIZE		BC	"D"	"L"
		BASE	TOP					TOTAL	"d"			
HM CAMERA POLE 50	50'	18"	10⅞"	0.3125"	0.1875"	32"	2"	12	2¼"	25"	3'-6"	13'-0"
HM CAMERA POLE 60	60'		9½"									
HM CAMERA POLE 70	70'	22"	12"			36"	3"		3"	29"	4'-0"	14'-0"
HM CAMERA POLE 80	80'	22"	11⅝"	0.375"	0.25"	39"				30"	4'-6"	
HM CAMERA POLE 90	90'	25"	17⅛"			46"				37"	6'-0"	15'-0"

Dist	COUNTY	ROUTE	POST MILES TOTAL PROJECT	SHEET No.	TOTAL SHEETS

REGISTERED CIVIL ENGINEER

September 18, 2026
PLANS APPROVAL DATE

REGISTERED PROFESSIONAL ENGINEER
Mahesh Shrestha
No. C80133
Exp. 9-30-26
CIVIL
STATE OF CALIFORNIA

THE STATE OF CALIFORNIA OR ITS OFFICERS OR AGENTS SHALL NOT BE RESPONSIBLE FOR THE ACCURACY OR COMPLETENESS OF SCANNED COPIES OF THIS PLAN SHEET.

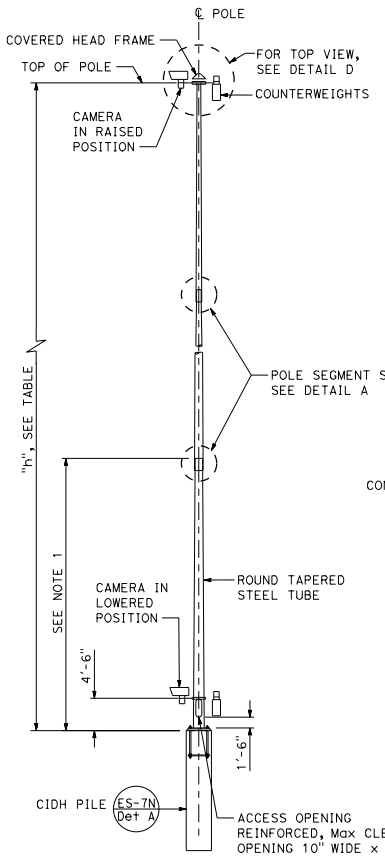

POLE
ELEVATION A

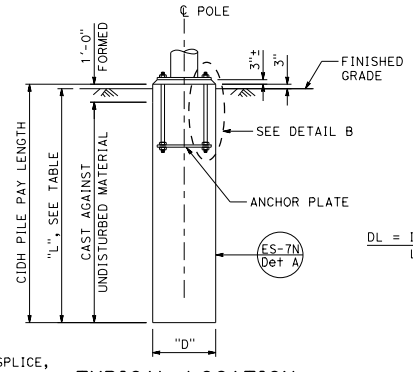

TYPICAL LOCATION
ELEVATION B

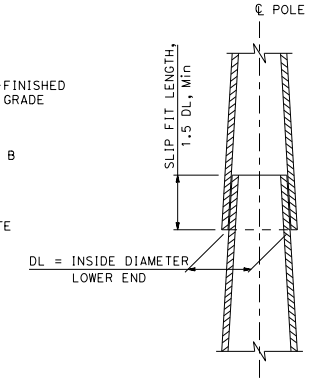

POLE SPLICE SEGMENT
DETAIL A

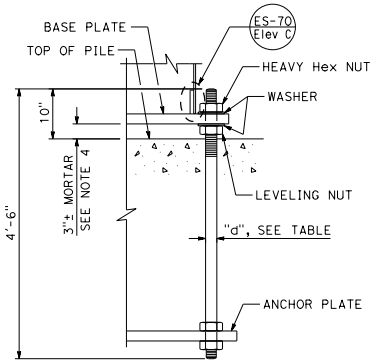

ANCHOR BOLT
DETAIL B

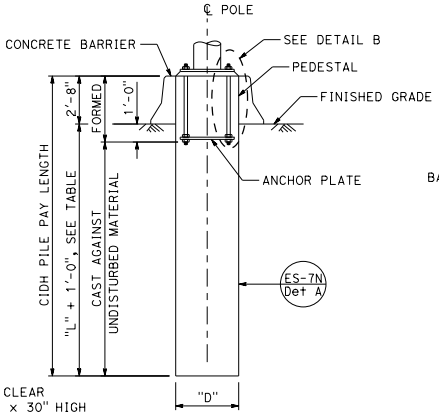

MEDIAN LOCATION
ELEVATION C

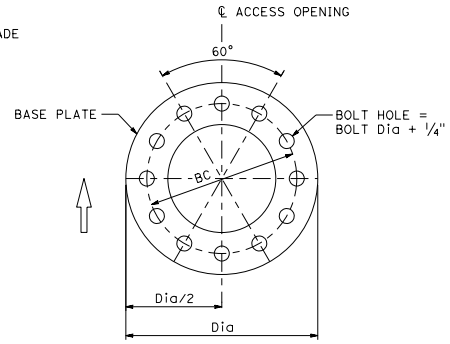

BASE PLATE
DETAIL C

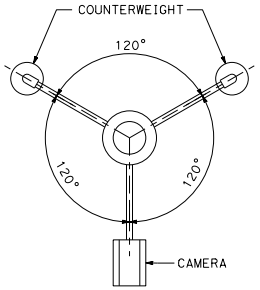

TOP VIEW
DETAIL D

NOTES:

1. Pole details shall suit the lowering device and this foundation plan. Pole details shall be submitted to the Engineer for approval.
2. Access opening shall be located on the downstream side of traffic unless otherwise determined by the Engineer.
3. Foundation design is based on a 3-second wind gust of 100 mph.
4. For central void and drain holes in mortar, see Standard Plan ES-6B Detail N.
5. For wind loading, see Standard Plan ES-7M.
6. Materials (Structural Steel):
   fy = 55,000 psi (tapered steel tube)
   fy = 50,000 psi (unless otherwise noted)

STATE OF CALIFORNIA
DEPARTMENT OF TRANSPORTATION

ELECTRICAL SYSTEMS (HIGH MAST CAMERA POLE 50' TO 90')

NO SCALE

ES-16C

2026 STANDARD PLAN ES-16C

7-1-26

Return to Table of Contents

Dist	COUNTY	ROUTE	POST MILES TOTAL PROJECT	SHEET No.	TOTAL SHEETS

REGISTERED CIVIL ENGINEER

September 18, 2026

PLANS APPROVAL DATE

REGISTERED PROFESSIONAL ENGINEER — Mahesh Shrestha — No. C80133 — Exp. 9-30-26 — CIVIL — STATE OF CALIFORNIA

THE STATE OF CALIFORNIA OR ITS OFFICERS OR AGENTS SHALL NOT BE RESPONSIBLE FOR THE ACCURACY OR COMPLETENESS OF SCANNED COPIES OF THIS PLAN SHEET.

TABLE A

POLE TYPE	POLE DATA				BASE PLATE DATA				CIDH PILE DATA		
	HEIGHT H	Min OD		THICKNESS	C	THICKNESS	ANCHOR BOLTS SIZE	BC = BOLT CIRCLE	D	L	
		BASE	TOP							LEVEL GROUND	UP TO 2:1
VDS 30	30′	8"	3⅞"	0.1793"	1′-1½"	1½"	1½" ø x 3′-0"	1′-0"	2′-6"	6′-0"	8′-0"
VDS 35	35′	8¾"	3 11/16"		1′-1½"	2"		1′-0"	2′-6"	7′-0"	9′-0"
VDS 40	40′	12"	5⅝"		1′-6"	2"		1′-4"	3′-0"	9′-0"	11′-0"

TABLE B

POLE TYPE	COUPLING	
	E1 (Max)	E2 (Max)
VDS 30	3′-6"	4′-9"
VDS 35		
VDS 40		

TABLE C

SPREAD FOOTING		
GROUND	FOOTING SIZE (LENGTH x WIDTH x DEPTH)	REINFORCEMENT TOP AND BOTTOM
LEVEL	8′-6" x 8′-6" x 2′-0"	12 - #5 EW
UP TO 2:1	10′-0" x 10′-0" x 2′-0"	15 - #5 EW

TABLE D - LIMITATION ON ATTACHMENTS *

LOCATION	MAXIMUM TOTAL EPA PER LEVEL (SQUARE FEET)	MAXIMUM TOTAL WEIGHT (lb)
LEVEL #1	14	200
LEVEL #2	14	
LEVEL #3	10 ***	
LEVEL #4 (VDS 35 AND VDS 40 ONLY)	2.5	50
LEVEL #5 (VDS 40 ONLY)		
NEXT TO TOP LEVEL		
TOP LEVEL		
ON TOP PLATE LEVEL **		

* Maximum horizontal extent beyond pole face is 4′-0".
** Maximum extent above top plate is 3′-0".
*** 14 if level #1 is zero.

NOTES:

1. All steel shall be galvanized after fabrication.
2. The foundation shall be treated as level ground condition if the slope inclination is flatter than 4:1 (Horizontal:Vertical).
3. For devices mounted and mounting heights, see Table B.
4. For wind loading, see Standard Plan ES-7M.
5. Materials (Structural Steel):
   a. fy = 55,000 psi (tapered steel tube)
   b. fy = 50,000 psi (unless otherwise noted)
6. Anchor bolts: fy = 55,000 psi
7. Materials (Reinforced Concrete):
   a. f′c = 3,600 psi
   b. fy = 60,000 psi
8. Verify all controlling field dimension before ordering of fabricating any material.
9. When no barriers are used, the enclosure shall be located on the downstream side and perpendicular to the roadway.
10. 1′-3" maximum for sloped finished grade.
11. Top plate.
    Install a blank flange on the top plate when camera is not used.
12. Use the manufacturer's Effective Projected Area (EPA) for attachments. Assign attachments to nearest level and sum each level, see Table D for limitations.

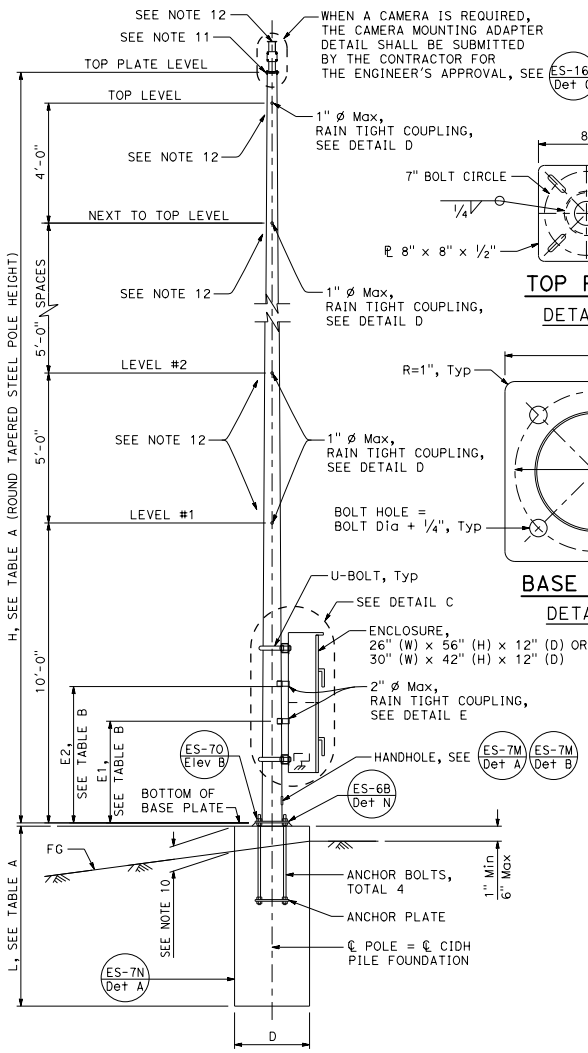

ELEVATION A

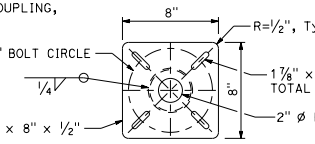

TOP PLATE

DETAIL A

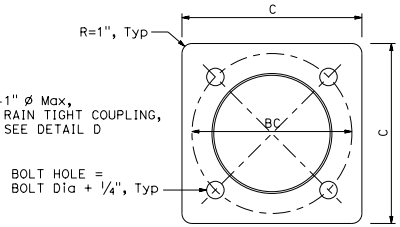

BASE PLATE

DETAIL B

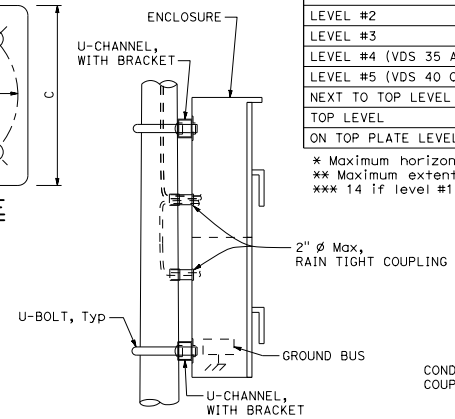

DETAIL C

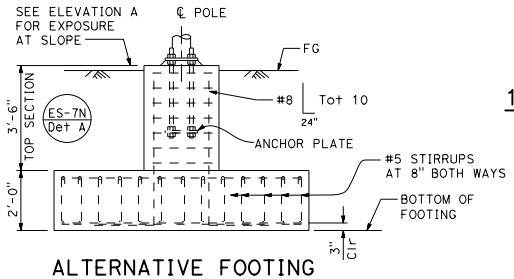

ALTERNATIVE FOOTING

ELEVATION B

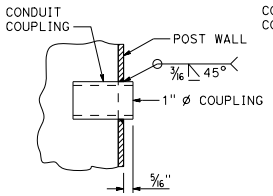

1" ø COUPLING

DETAIL D

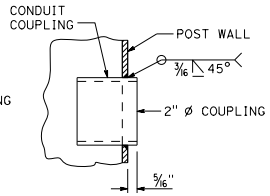

2" ø COUPLING

DETAIL E

STATE OF CALIFORNIA
DEPARTMENT OF TRANSPORTATION

ELECTRICAL SYSTEMS (VEHICLE DETECTION SYSTEM, POLE 30' TO 40')

NO SCALE

ES-16D

2026 STANDARD PLAN ES-16D

7-1-26

Return to Table of Contents

Dist	COUNTY	ROUTE	POST MILES TOTAL PROJECT	SHEET No.	TOTAL SHEETS

REGISTERED ELECTRICAL ENGINEER

September 18, 2026
PLANS APPROVAL DATE

REGISTERED PROFESSIONAL ENGINEER Bhanupriya Sharma No. E23752 Exp. 12-31-27 ELECTRICAL STATE OF CALIFORNIA

THE STATE OF CALIFORNIA OR ITS OFFICERS OR AGENTS SHALL NOT BE RESPONSIBLE FOR THE ACCURACY OR COMPLETENESS OF SCANNED COPIES OF THIS PLAN SHEET.

NOTES:

1. "PB" for Pull Box or "VT" for Vault.
2. Telephone number as specified.
3. 1" black text.
4. ½" black text.

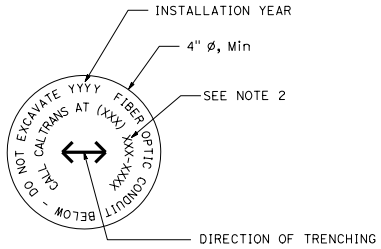

DISK MARKER ETCHING

DETAIL A

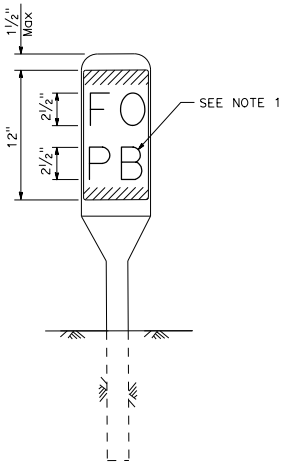

FIBER OPTIC MARKER
FOR VAULTS AND PULL BOXES

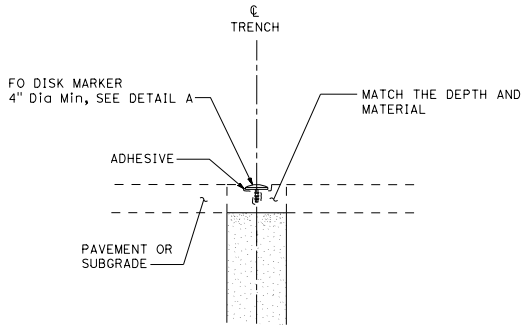

FIBER OPTIC MARKER
FOR PAVED AREAS

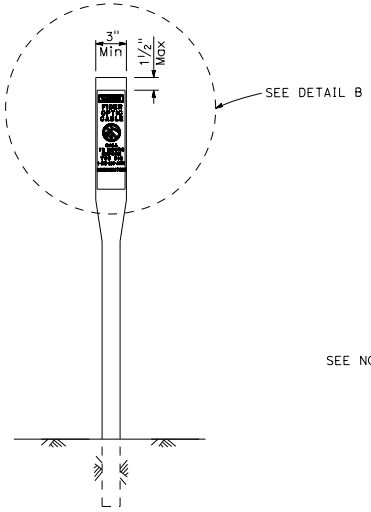

FIBER OPTIC MARKER
FOR UNPAVED AREAS

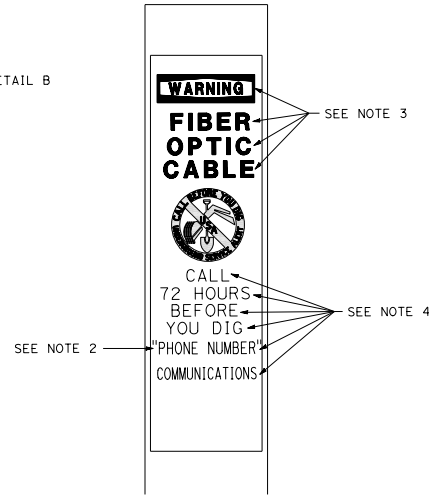

DETAIL B

STATE OF CALIFORNIA
DEPARTMENT OF TRANSPORTATION

ELECTRICAL SYSTEMS
(FIBER OPTIC MARKER DETAILS)

NO SCALE

ES-17A

2026 STANDARD PLAN ES-17A

7-1-26

Return to Table of Contents

Dist	COUNTY	ROUTE	POST MILES TOTAL PROJECT	SHEET No.	TOTAL SHEETS

REGISTERED CIVIL ENGINEER

September 18, 2026

PLANS APPROVAL DATE

REGISTERED PROFESSIONAL ENGINEER Mahesh Shrestha No. C80133 Exp. 9-30-26 CIVIL STATE OF CALIFORNIA

THE STATE OF CALIFORNIA OR ITS OFFICERS OR AGENTS SHALL NOT BE RESPONSIBLE FOR THE ACCURACY OR COMPLETENESS OF SCANNED COPIES OF THIS PLAN SHEET.

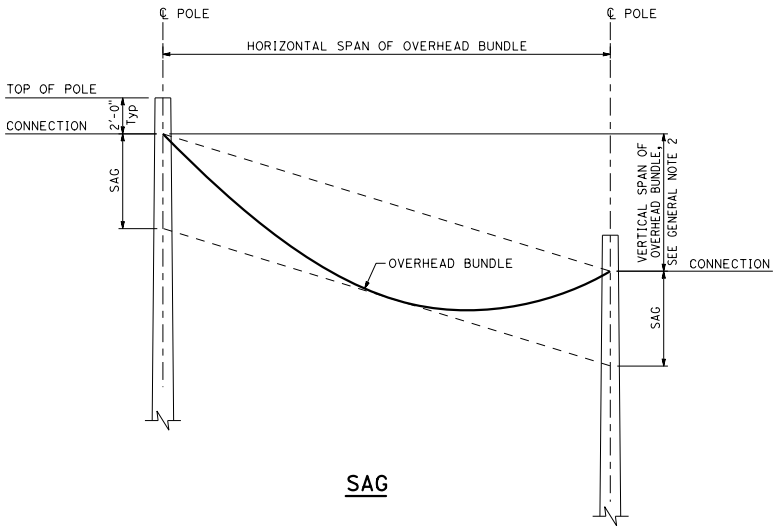

SAG

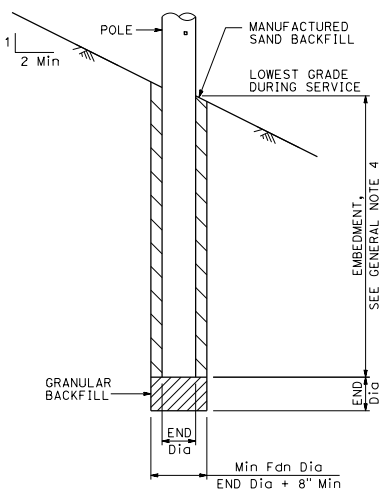

POLE FOUNDATION

Design: AASHTO Standard Specifications for Structural Supports for Highway Signs, Luminaires and Traffic Signals, Fifth Edition (LTS-5).

GROUP LOAD COMBINATIONS:

I Dead Load
II Dead Load + Wind Load
III Dead Load + 0.5 (Wind Load) + Ice Load
IV Fatigue: Not used

LOADING:

Wind Loading: 100 mph (3-second gust)
Wind Recurrence Interval: 10 years
Combined height, exposure, and elevated terrain factor = 1.05 (Exposure C, structure is not located on or over the top half of a ridge, hill, or escarpment)

Ice Loading: 3.0 psf on surfaces, 0.60 in radial thickness of ice at a unit weight of 60 pcf on overhead bundles

BASIC DESIGN VALUES:

Timber Poles: Fb = 1850 psi
Fv = 110 psi
Fcp = 230 psi
Fc = 950 psi
E = 1500 x 10^3 psi

DESIGN WIRE BREAKING STRENGTHS:

ASTM A475, Utilities Grade, 7 strand modified by termination efficiency factor of 0.8

FOUNDATION DESIGN NOTES:

1. Pole embedment depth design is based on Broms' approximate procedure as described in Article 13.6 of AASHTO LTS-5.
2. Embedment depth is calculated based on following soil parameters,
   Cohesive Soil:
   Shear strength of soil c = 1500 psf.
   Cohesionless Soil:
   ø = 30 deg, γ = 120 pcf.
   Soil assumed to be unsaturated.
3. An overload factor of 2.0 and an undercapacity factor of 0.7 were used for safety factor of 2.86.
4. Allowable vertical bearing pressure at the end bearing of poles is 3000 psf at 6 feet or more embedment.
5. Guy wire anchor minimum allowable tension capacity, "Qa" = 8,900 lbs.

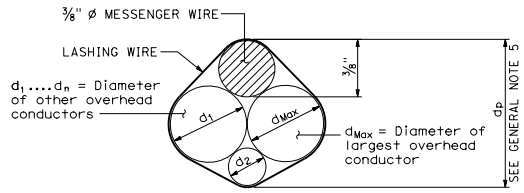

$d_p = ⅜" + d_{Max} + 0.30 * (d_1 + d_2 + ... d_n)$

PROJECTED DEPTH OF OVERHEAD BUNDLE, (dp)

GENERAL NOTES:

1. The messenger wire and any combination of overhead conductors must not exceed either a self weight of 3.0 lb/ft or the maximum d in the pole selection tables.
2. The maximum vertical span is 10% of the horizontal span.
3. For poles with adjacent unbalanced horizontal spans, the shortest horizontal span must be at least 50% of the largest horizontal span.
4. Add 2'-0" for slopes above 1V:4H.
5. For a pole supporting multiple spans, calculate dp for each span and use the largest value.
6. Do not exceed the attachments shown.

DIAMETERS AND SELF WEIGHT OF OVERHEAD CONDUCTORS

CONDUCTOR OR CABLE TYPE	DIAMETER d (in)	WEIGHT w (plf)
3 CONDUCTOR SIGNAL CABLE (3CSC)	0.400	0.0980
5 CONDUCTOR SIGNAL CABLE (5CSC)	0.500	0.1560
9 CONDUCTOR SIGNAL CABLE (9CSC)	0.650	0.2760
12 CONDUCTOR SIGNAL CABLE (12CSC)	0.800	0.3970
1-#14	0.166	0.0235
1-#12	0.185	0.0330
1-#10	0.210	0.0476
1-#8	0.271	0.0774
1-#6	0.310	0.1130
1-#4	0.359	0.1690
1-#3	0.388	0.2080
1-#2	0.420	0.2560
1-#1	0.498	0.3340
6-CONDUCTOR SIGNAL INTERCONNECT CABLE (SIC)	0.350	0.0860
12-CONDUCTOR SIGNAL INTERCONNECT CABLE (SIC)	0.500	0.1440
DETECTOR LEAD-IN CABLE (DLC)	0.310	0.0440
12 to 48-STRAND FIBER OPTIC CABLE (48FOC)	0.424	0.0600
72-STRAND FIBER OPTIC CABLE (72FOC)	0.484	0.0770
96-STRAND FIBER OPTIC CABLE (96FOC)	0.535	0.1050
144-STRAND FIBER OPTIC CABLE (144FOC)	0.670	0.1890
⅜" ø MESSENGER WIRE	0.375	0.2730

STATE OF CALIFORNIA
DEPARTMENT OF TRANSPORTATION

TEMPORARY WOOD POLES GENERAL NOTES

NO SCALE

ES-18A

2026 STANDARD PLAN ES-18A

7-1-26

Return to Table of Contents

LEGEND:

- Wood Pole No Attachments
- A Wood Pole with Attachments
- —OH— Overhead Bundle

POLE SELECTION TABLE

			CASE 1N				CASE 2N				CASE 3N				CASE 4N				CASE 5N
		MAXIMUM d_p	1.0"	1.5"	2.0"	2.5"	1.0"	1.5"	2.0"	2.5"	1.0"	1.5"	2.0"	2.5"	1.0"	1.5"	2.0"	2.5"	N/A
OVERHEAD BUNDLE HORIZONTAL SPAN (Max)	50'	MINIMUM POLE CLASS	H-1	H-2	H-2	H-2	4	3	2	1	H-2	H-2	H-3	H-3	H-4	H-4	H-4	H-5	CLASS 1 E = 10'
		POLE EMBEDMENT (E)	11'				10'				11'				12'				
	100'	MINIMUM POLE CLASS	H-2	H-3	H-4	H-5	1	H-1	H-2	H-3	H-4	H-5	H-5	H-6	H-5	H-5	H-6		
		POLE EMBEDMENT (E)	12'				11'				12'				12'				
	150'	MINIMUM POLE CLASS	H-4	H-5	H-6		H-1	H-2	H-3	H-5	H-6				H-6				
		POLE EMBEDMENT (E)	12'				12'				12'				12'				
	200'	MINIMUM POLE CLASS	H-5	H-6			H-2	H-3	H-5										
		POLE EMBEDMENT (E)	12'				12'												

LEGEND

1. Camera or vehicle detection system
2. Overhead bundle consisting of a ⅜" ø messenger wire, overhead conductors, and lashing wire
3. Luminaire with mast arm
4. Pedestrian push button or accessible push button
5. Signal face with 3 indications or single sheet sign panel (10 SQFT Max)
6. Riser with weather head as required
7. Pull box as required
8. Grounding as required
9. Single flashing beacon or single sheet sign panel (4 SQFT Max)
10. Single sheet sign panel (4' x 4' Max) or signal face with 3 indications
11. Flashing beacon enclosure
12. Enclosure, 26"(W) x 56"(H) x 12"(D) Max dimensions. Max weight including batteries, 450 lbs
13. 25 SQFT Max total photovoltaic panels mounted as shown as required
14. 2-12" flashing beacons

Dist	COUNTY	ROUTE	POST MILES TOTAL PROJECT	SHEET No.	TOTAL SHEETS

REGISTERED CIVIL ENGINEER

September 18, 2026

PLANS APPROVAL DATE

REGISTERED PROFESSIONAL ENGINEER Mahesh Shrestha No. C80133 Exp. 9-30-26 CIVIL STATE OF CALIFORNIA

THE STATE OF CALIFORNIA OR ITS OFFICERS OR AGENTS SHALL NOT BE RESPONSIBLE FOR THE ACCURACY OR COMPLETENESS OF SCANNED COPIES OF THIS PLAN SHEET.

NOTES:

1. In addition to other restrictions on maximum horizontal span, this horizontal span must not exceed 100'.
2. Cases 1N, 3N, and 4N may substitute the attachments shown in Case 5N if the photovoltaic panel is not included.
3. For Case 1N without an overhead bundle (item 2), use minimum pole class H-1 with E=11'.

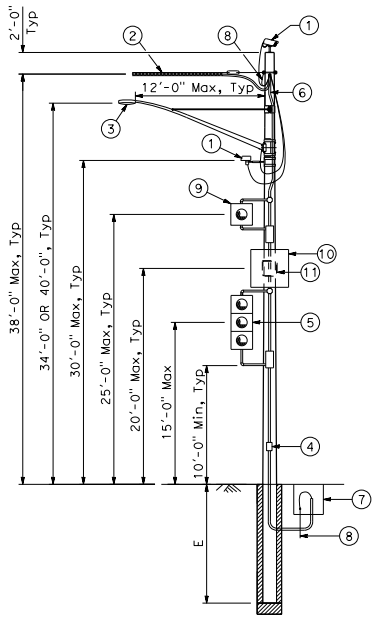

CASE 1N

POLE AT DEAD END WITH ATTACHMENTS

See Note 2

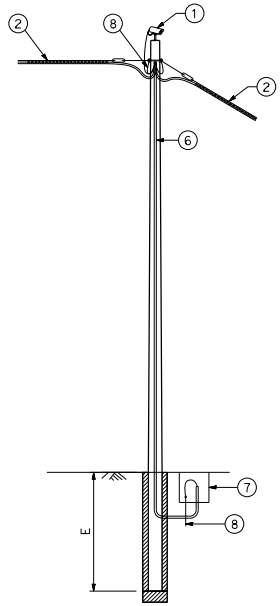

CASE 2N

POLE AT TANGENT WITHOUT ATTACHMENTS

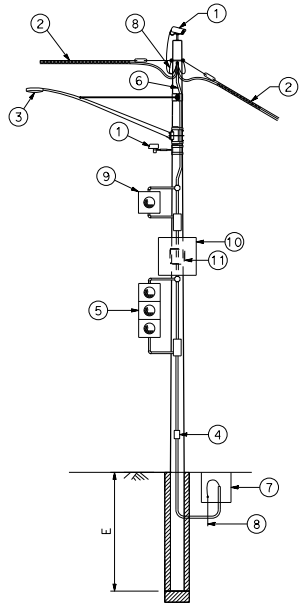

CASE 3N

POLE AT TANGENT OR CORNER WITH ATTACHMENTS

See Note 2

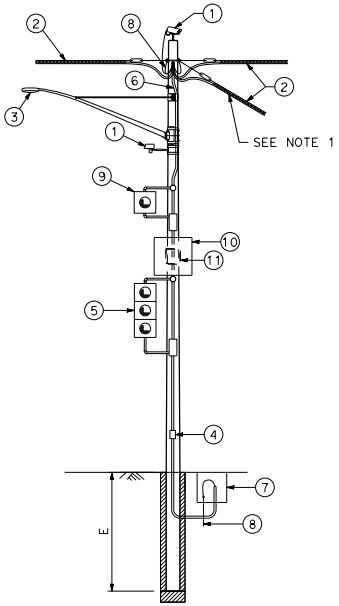

CASE 4N

POLE AT JUNCTION WITH ATTACHMENTS

See Note 2

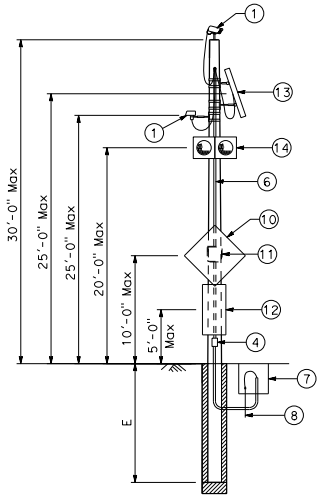

CASE 5N

POLE WITHOUT OVERHEAD BUNDLE WITH ATTACHMENTS

STATE OF CALIFORNIA
DEPARTMENT OF TRANSPORTATION

TEMPORARY WOOD POLES NON-GUYED NO SIGNALS ON SPANS

NO SCALE

ES-18B

2026 STANDARD PLAN ES-18B

7-1-26

Return to Table of Contents

LEGEND:

- A — Wood Pole with Attachments
- —OH— Overhead Bundle
- —— Guy Anchor

POLE SELECTION TABLE

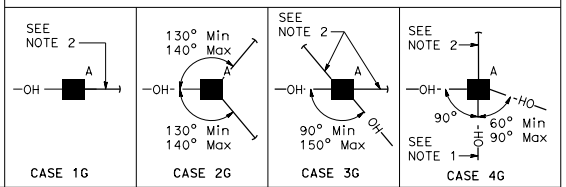

OVERHEAD BUNDLE HORIZONTAL SPAN (Max)		CASE 1G				CASE 2G				CASE 3G				CASE 4G			
	MAXIMUM d_p	1.0"	1.5"	2.0"	2.5"	1.0"	1.5"	2.0"	2.5"	1.0"	1.5"	2.0"	2.5"	1.0"	1.5"	2.0"	2.5"
50′	MINIMUM POLE CLASS	H-1	H-1	H-2	H-2	1	1	1	1	1	1	1	H-1	H-2	H-2	H-3	H-3
	POLE EMBEDMENT (E)	10′				9′				9′				11′			
100′	MINIMUM POLE CLASS	H-2	H-2	H-3	H-4	1	H-1	H-1	H-1	1	H-1	H-2	H-2	H-3	H-3	H-4	H-4
	POLE EMBEDMENT (E)	11′				9′				9′				12′			
150′	MINIMUM POLE CLASS	H-3	H-3	H-4	H-5	H-1	H-1	H-2	H-2	H-2	H-3	H-3	H-3	H-4	H-5	H-5	H-6
	POLE EMBEDMENT (E)	11′				9′				9′				12′			
200′	MINIMUM POLE CLASS	H-4	H-4	H-5	H-6	H-1	H-2	H-3	H-3	H-3	H-3	H-4	H-4	H-5	H-6		
	POLE EMBEDMENT (E)	11′				9′				9′				12′			

LEGEND

1. Camera or vehicle detection system
2. Overhead bundle consisting of a ⅜" ø messenger wire, overhead conductors, and lashing wire
3. Luminaire with mast arm
4. Pedestrian push button or accessible push button
5. Signal face with 3 indications or single sheet sign panel (10 SQFT Max)
6. Riser with weather head as required
7. Pull box as required
8. Grounding as required
9. Single flashing beacon or single sheet sign panel (4 SQFT Max)
10. Single sheet sign panel (4′ x 4′ Max) or signal face with 3 indications
11. Flashing beacon enclosure
12. ½" ø guy wire with white guy marker and strain insulator (for anchorage, see Standard Plan ES-19B)

Dist	COUNTY	ROUTE	POST MILES TOTAL PROJECT	SHEET No.	TOTAL SHEETS

REGISTERED CIVIL ENGINEER

September 18, 2026

PLANS APPROVAL DATE

REGISTERED PROFESSIONAL ENGINEER — Mahesh Shrestha — No. C80133 — Exp. 9-30-26 — CIVIL — STATE OF CALIFORNIA

THE STATE OF CALIFORNIA OR ITS OFFICERS OR AGENTS SHALL NOT BE RESPONSIBLE FOR THE ACCURACY OR COMPLETENESS OF SCANNED COPIES OF THIS PLAN SHEET.

NOTES:

1. In addition to other restrictions on maximum horizontal span, this horizontal span must not exceed 100′.
2. Guy wire in line with opposing span ±5°.

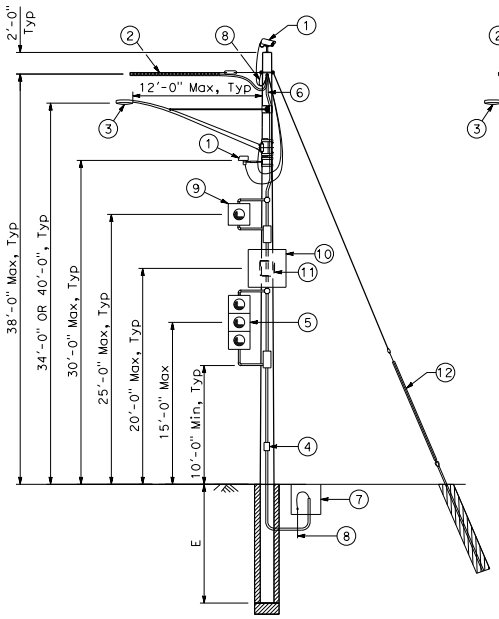

CASE 1G

POLE AT DEAD END WITH ATTACHMENTS

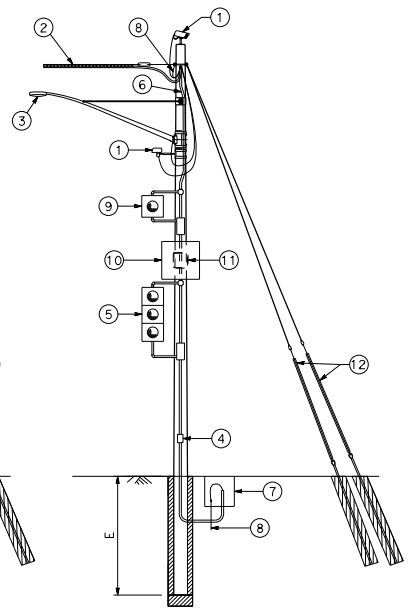

CASE 2G

POLE AT DEAD END WITH ATTACHMENTS

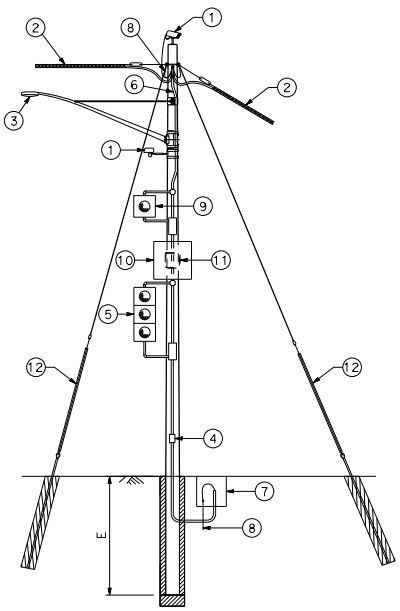

CASE 3G

POLE AT CORNER WITH ATTACHMENTS

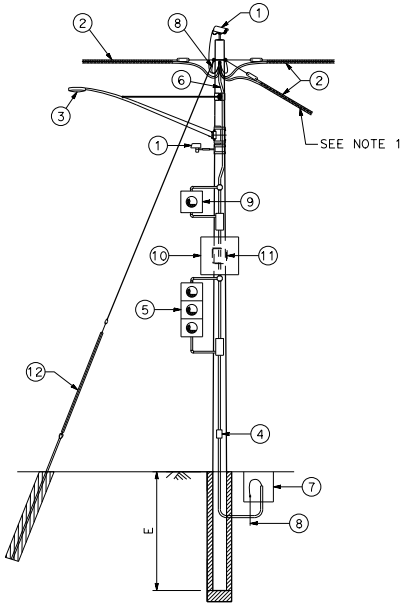

CASE 4G

POLE AT JUNCTION WITH ATTACHMENTS

STATE OF CALIFORNIA
DEPARTMENT OF TRANSPORTATION

TEMPORARY WOOD POLES GUYED NO SIGNALS ON SPANS

NO SCALE

ES-18C

2026 STANDARD PLAN ES-18C

7-1-26

Return to Table of Contents

LEGEND:

- A — Wood Pole with Attachments
- TS — Overhead Bundle with Signal Faces, See Note 2
- OH — Overhead Bundle
- Guy Anchor

POLE SELECTION TABLE

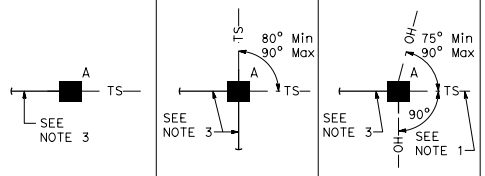

		CASE 1GT			CASE 2GT			CASE 3GT		
	MAXIMUM d_p	1.0"	1.5"	2.0"	1.0"	1.5"	2.0"	1.0"	1.5"	2.0"
OVERHEAD BUNDLE HORIZONTAL SPAN Max 50′	MINIMUM POLE CLASS	H-2	H-3	H-3	H-2	H-2	H-2	H-3	H-4	H-4
	POLE EMBEDMENT (E)	10′			10′			11′		
100′	MINIMUM POLE CLASS	H-3	H-3	H-4	H-2	H-3	H-3	H-4	H-4	H-5
	POLE EMBEDMENT (E)	11′			10′			11′		
150′	MINIMUM POLE CLASS	H-3	H-4	H-4	H-2	H-3	H-4	H-4	H-5	H-5
	POLE EMBEDMENT (E)	11′			10′			11′		

LEGEND

1. Camera or vehicle detection system
2. Overhead bundle consisting of ⅜" ø messenger wire and overhead conductors and lashing wire
3. Luminaire with mast arm
4. Pedestrian push button or accessible push button
5. Signal face with 3 indications or single sheet sign panel (10 SQFT Max)
6. Riser with weather head as required
7. Pull box as required
8. Grounding as required
9. ⅜" ø tether wire
10. ½" ø guy wire with white guy marker and strain insulator. For anchorage, see Standard Plan ES-19B
11. Pedestrian signal head

Dist	COUNTY	ROUTE	POST MILES TOTAL PROJECT	SHEET No.	TOTAL SHEETS

REGISTERED CIVIL ENGINEER

September 18, 2026

PLANS APPROVAL DATE

REGISTERED PROFESSIONAL ENGINEER — Mahesh Shrestha — No. C80133 — Exp. 9-30-26 — CIVIL — STATE OF CALIFORNIA

THE STATE OF CALIFORNIA OR ITS OFFICERS OR AGENTS SHALL NOT BE RESPONSIBLE FOR THE ACCURACY OR COMPLETENESS OF SCANNED COPIES OF THIS PLAN SHEET.

NOTES:

1. In addition to other restrictions on maximum horizontal span, this horizontal span must not exceed 100′.
2. Maximum of 2 signal faces per span within the hatched regions indicated by "LOCATION OF SIGNAL FACES".
3. Guy wire in line with opposing span ±5°.

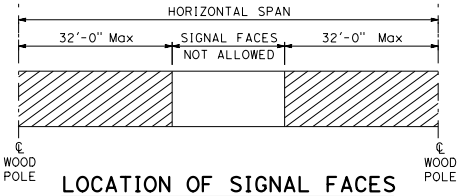

LOCATION OF SIGNAL FACES

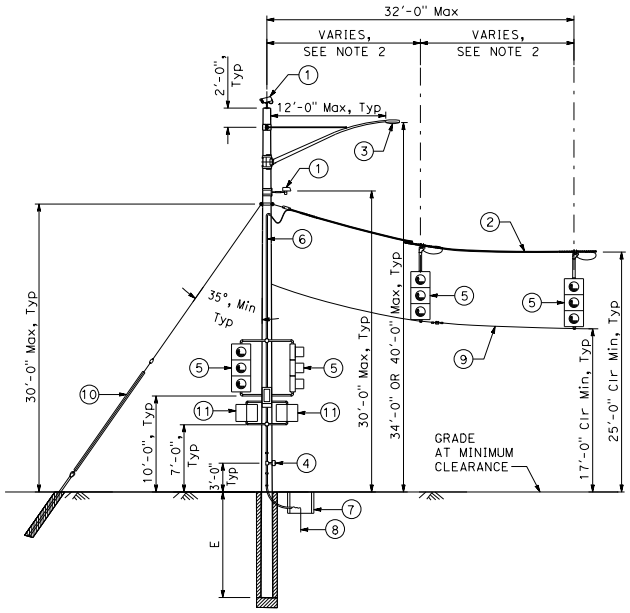

CASE 1GT

POLE AT DEAD END WITH ATTACHMENTS

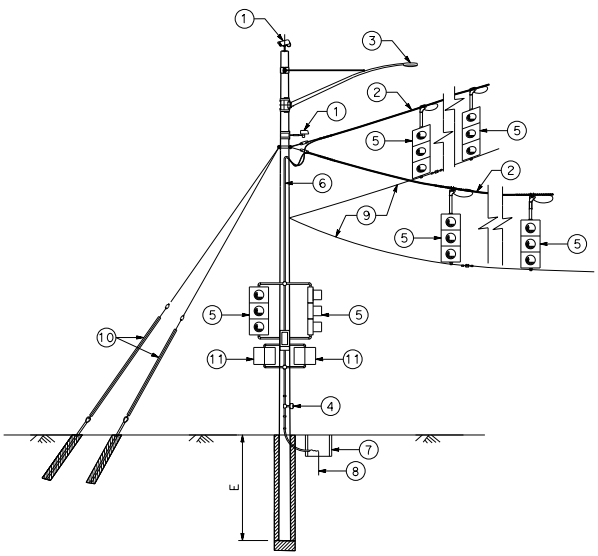

CASE 2GT

POLE AT CORNER WITH ATTACHMENTS

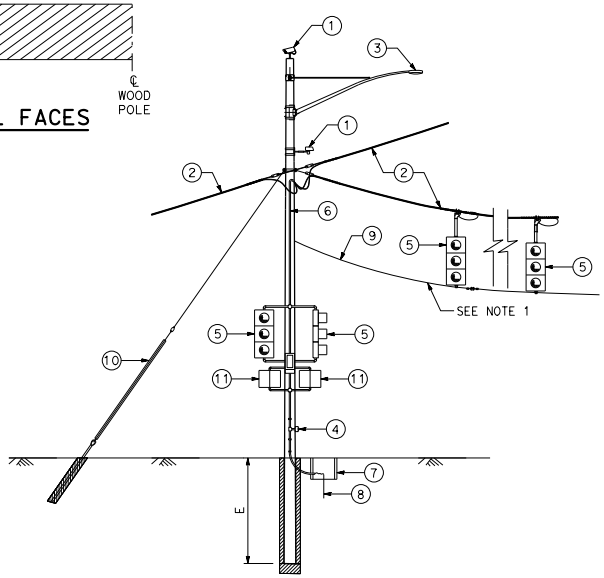

CASE 3GT

POLE AT JUNCTION WITH ATTACHMENTS

STATE OF CALIFORNIA
DEPARTMENT OF TRANSPORTATION

TEMPORARY WOOD POLES GUYED WITH SIGNAL FACES ON SPANS

NO SCALE

ES-18D

2026 STANDARD PLAN ES-18D

7-1-26

Return to Table of Contents

Dist	COUNTY	ROUTE	POST MILES TOTAL PROJECT	SHEET No.	TOTAL SHEETS

REGISTERED CIVIL ENGINEER

September 18, 2026

PLANS APPROVAL DATE

REGISTERED PROFESSIONAL ENGINEER Mahesh Shrestha No. C80133 Exp. 9-30-26 CIVIL STATE OF CALIFORNIA

THE STATE OF CALIFORNIA OR ITS OFFICERS OR AGENTS SHALL NOT BE RESPONSIBLE FOR THE ACCURACY OR COMPLETENESS OF SCANNED COPIES OF THIS PLAN SHEET.

LEGEND:

A — Wood Pole with attachments

—TS— Overhead Bundle with Signal Faces, see Note 1

POLE SELECTION TABLE

A —TS—

CASE 1NT

OVERHEAD BUNDLE HORIZONTAL SPAN (Max)	75′	MAXIMUM d_p	1.0"	1.5"	2.0"
		MINIMUM POLE CLASS	H-5	H-6	H-6
		POLE EMBEDMENT (E)	13′		

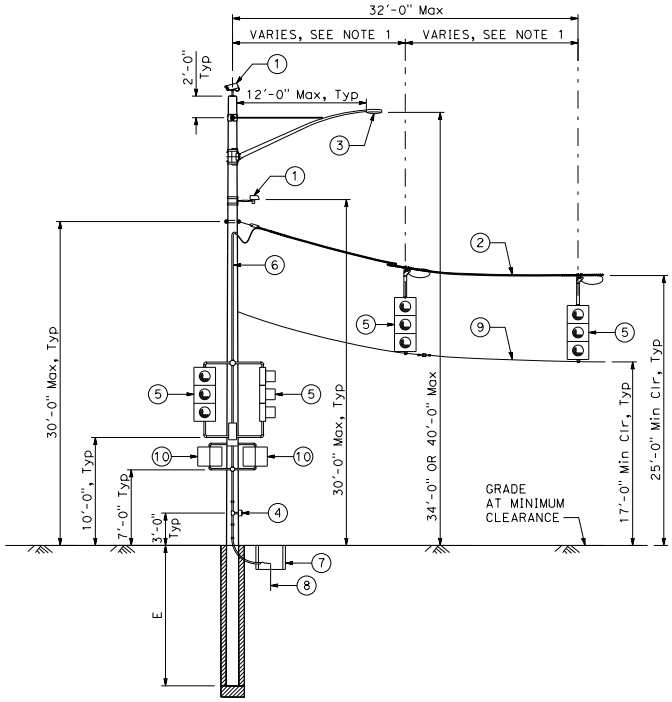

CASE 1NT

POLE AT DEAD END WITH ATTACHMENTS

NOTE:

1. Maximum of 2 signal faces per span within the hatched regions indicated by "LOCATION OF SIGNAL FACES".

LEGEND

1. Camera or vehicle detection system
2. Overhead bundle consisting of a ⅜" ø messenger wire and overhead conductors and lashing wire
3. Luminaire with mast arm
4. Pedestrian push button or accessible push button
5. Signal face with 3 indications or single sheet sign panel (10 SQFT Max)
6. Riser with weather head as required
7. Pull box as required
8. Grounding as required
9. ⅜" ø tether wire
10. Pedestrian signal head

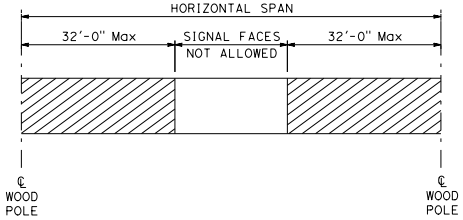

LOCATION OF SIGNAL FACES

STATE OF CALIFORNIA
DEPARTMENT OF TRANSPORTATION

TEMPORARY WOOD POLES NON-GUYED WITH SIGNAL FACES ON SPAN

NO SCALE

ES-18E

2026 STANDARD PLAN ES-18E

7-1-26

Return to Table of Contents

Dist	COUNTY	ROUTE	POST MILES TOTAL PROJECT	SHEET No.	TOTAL SHEETS

REGISTERED CIVIL ENGINEER

September 18, 2026

PLANS APPROVAL DATE

REGISTERED PROFESSIONAL ENGINEER Mahesh Shrestha No. C80133 Exp. 9-30-26 CIVIL STATE OF CALIFORNIA

THE STATE OF CALIFORNIA OR ITS OFFICERS OR AGENTS SHALL NOT BE RESPONSIBLE FOR THE ACCURACY OR COMPLETENESS OF SCANNED COPIES OF THIS PLAN SHEET.

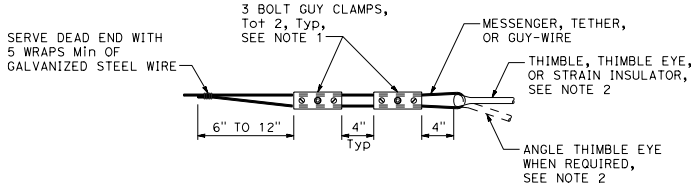

ALTERNATIVE TERMINATION OF MESSENGER WIRES USING GUY CLAMPS

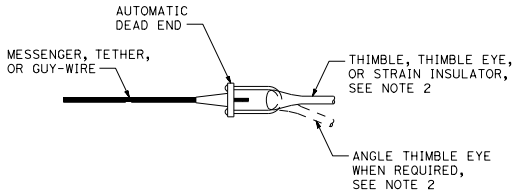

TERMINATION OF WIRES USING AUTOMATIC DEAD END

NOTES:

1. For guy wires, use 3 clamps.
2. Use ⅝" ø except ¾" ø at guyed wires.
3. Install additional angle thimble eyelet at poles with two guy wires.

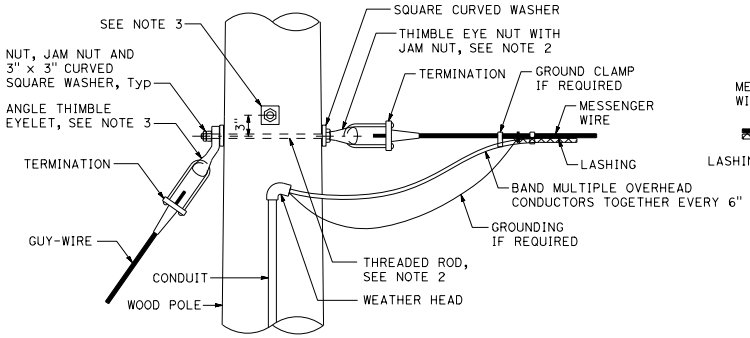

POLE AT DEAD END WITH GUY-WIRE CONNECTION

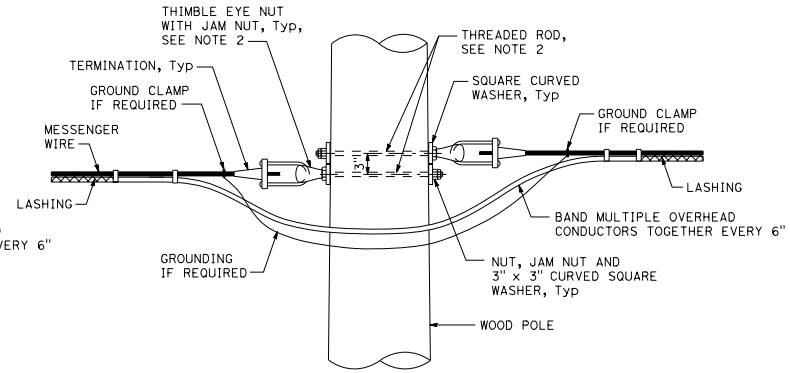

POLE AT TANGENT OR CORNER CONNECTION

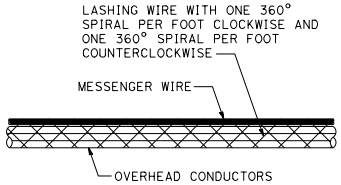

DOUBLE LASHING DETAIL

Use if d_p is greater than 1½"

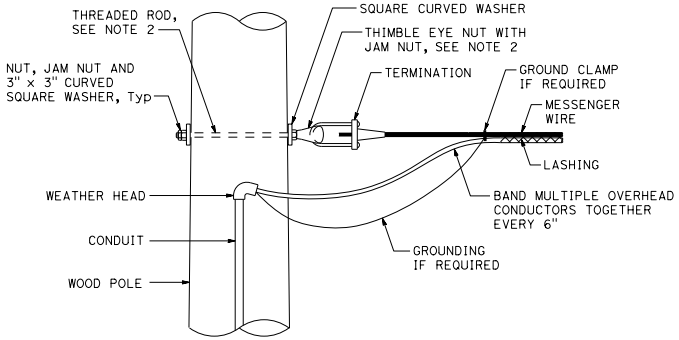

POLE AT DEAD END CONNECTION

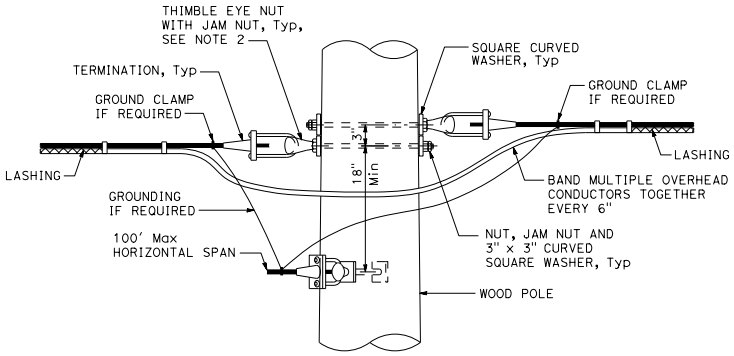

POLE AT JUNCTION CONNECTION

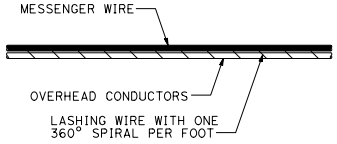

TYPICAL LASHING DETAIL

Use if d_p is 1½" or less

STATE OF CALIFORNIA
DEPARTMENT OF TRANSPORTATION

TEMPORARY WOOD POLES DETAILS No. 1

NO SCALE

ES-19A

2026 STANDARD PLAN ES-19A

7-1-26

Return to Table of Contents

Dist	COUNTY	ROUTE	POST MILES TOTAL PROJECT	SHEET No.	TOTAL SHEETS

REGISTERED CIVIL ENGINEER

September 18, 2026

PLANS APPROVAL DATE

REGISTERED PROFESSIONAL ENGINEER Mahesh Shrestha No. C80133 Exp. 9-30-26 CIVIL STATE OF CALIFORNIA

THE STATE OF CALIFORNIA OR ITS OFFICERS OR AGENTS SHALL NOT BE RESPONSIBLE FOR THE ACCURACY OR COMPLETENESS OF SCANNED COPIES OF THIS PLAN SHEET.

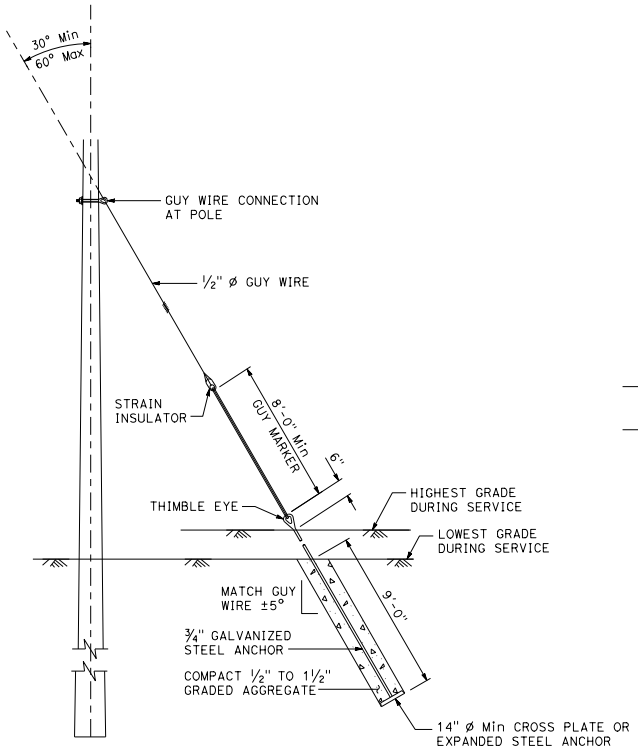

NOTE:

Helical anchor detail may be used in place of expanded steel anchors.

EXPANDED STEEL ANCHOR DETAIL

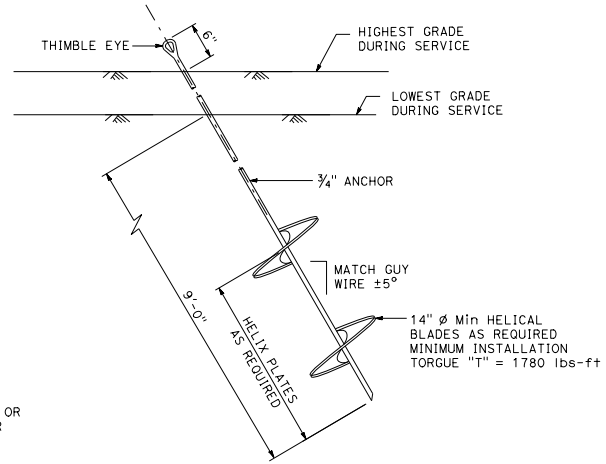

HELICAL ANCHOR DETAIL

NOTE:

1. For minimum allowable tension capacity of anchors, see Standard Plan ES-18A.

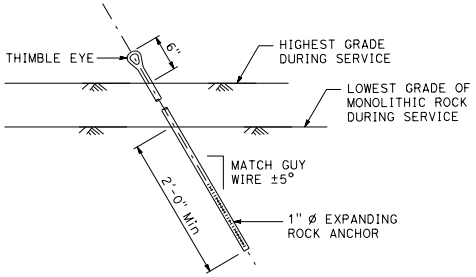

EXPANDING ROCK ANCHOR DETAIL

STATE OF CALIFORNIA
DEPARTMENT OF TRANSPORTATION

TEMPORARY WOOD POLES DETAILS No. 2

NO SCALE

ES-19B

2026 STANDARD PLAN ES-19B

7-1-26

Return to Table of Contents

Dist	COUNTY	ROUTE	POST MILES TOTAL PROJECT	SHEET No.	TOTAL SHEETS

REGISTERED CIVIL ENGINEER

September 18, 2026

PLANS APPROVAL DATE

REGISTERED PROFESSIONAL ENGINEER Mahesh Shrestha No. C80133 Exp. 9-30-26 CIVIL STATE OF CALIFORNIA

THE STATE OF CALIFORNIA OR ITS OFFICERS OR AGENTS SHALL NOT BE RESPONSIBLE FOR THE ACCURACY OR COMPLETENESS OF SCANNED COPIES OF THIS PLAN SHEET.

NOTES:

1. Luminaire mast arms must be in compliance with Standard Plan ES-6D with noted modifications.
2. Verify pole dimensions at tie-rod attachment height. Fabricate 9" flat bar with "L" Dimension to maintain an open gap between flanges in finished installation.
3. Not all screw heads and bolt heads are shown for clarity.
4. Mast arm not shown for clarity.

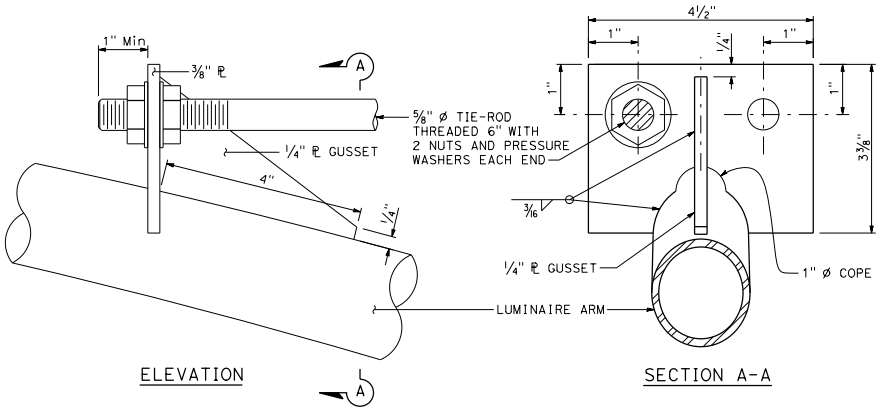

ELEVATION

SECTION A-A

TIE-ROD AT LUMINAIRE ARM

DETAIL A

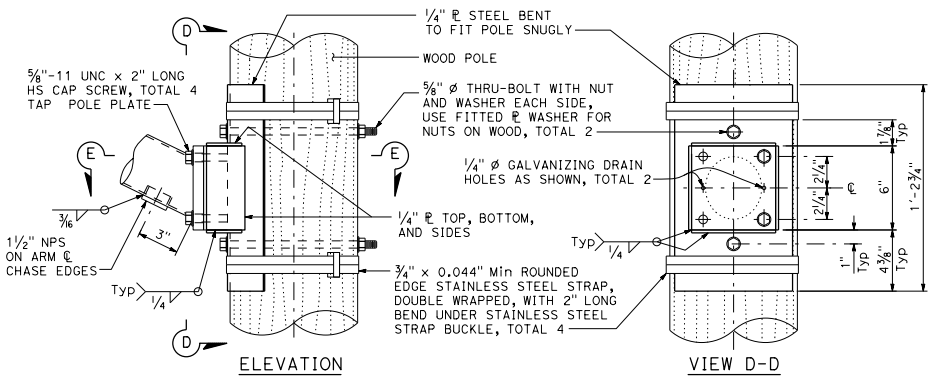

ELEVATION

VIEW D-D

ARM CONNECTION DETAILS

DETAIL B

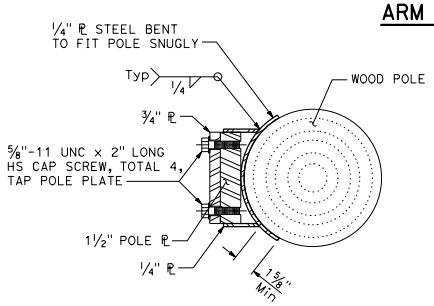

SECTION E-E

LUMINAIRE MAST ARM DATA			
PROJECTED LENGTH	N RISE	Min OD AT POLE	NOMINAL THICKNESS
6'-0"	2'-0"±	3 1/4"	0.1196"
8'-0"	2'-6"±	3 1/2"	
10'-0"	3'-3"±	3 7/8"	
12'-0"	4'-3"±		

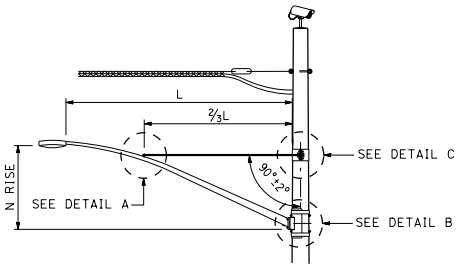

LUMINAIRE MAST ARM

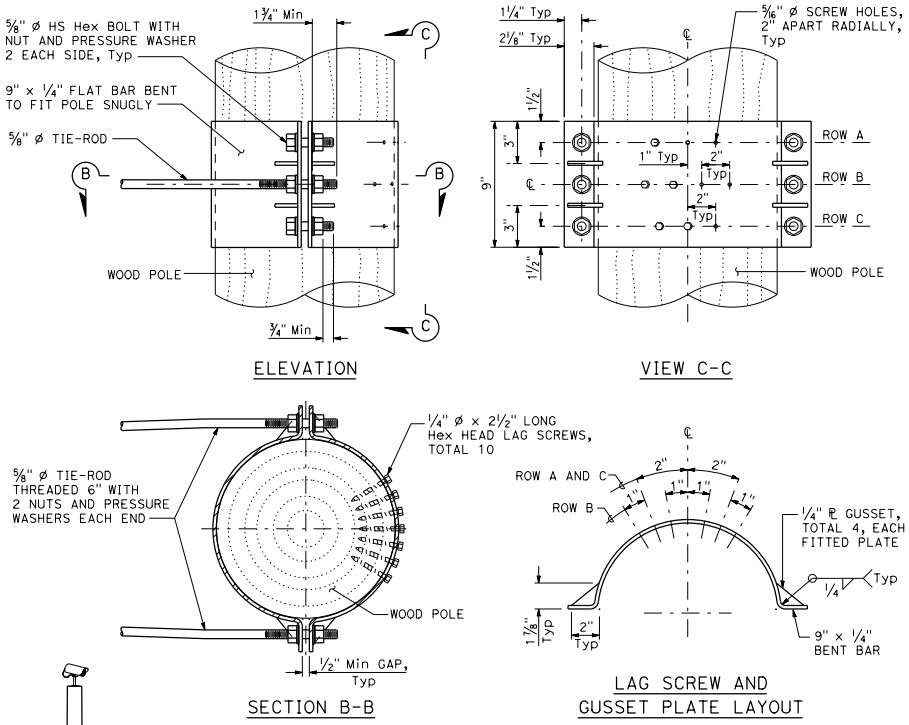

ELEVATION

VIEW C-C

SECTION B-B

LAG SCREW AND GUSSET PLATE LAYOUT

TIE-ROD AT POLE

DETAIL C

STATE OF CALIFORNIA
DEPARTMENT OF TRANSPORTATION

TEMPORARY WOOD POLES DETAILS No. 3

NO SCALE

ES-19C

2026 STANDARD PLAN ES-19C

7-1-26

Return to Table of Contents

Dist	COUNTY	ROUTE	POST MILES TOTAL PROJECT	SHEET No.	TOTAL SHEETS

REGISTERED CIVIL ENGINEER

September 18, 2026

PLANS APPROVAL DATE

REGISTERED PROFESSIONAL ENGINEER Mahesh Shrestha No. C80133 Exp. 9-30-26 CIVIL STATE OF CALIFORNIA

THE STATE OF CALIFORNIA OR ITS OFFICERS OR AGENTS SHALL NOT BE RESPONSIBLE FOR THE ACCURACY OR COMPLETENESS OF SCANNED COPIES OF THIS PLAN SHEET.

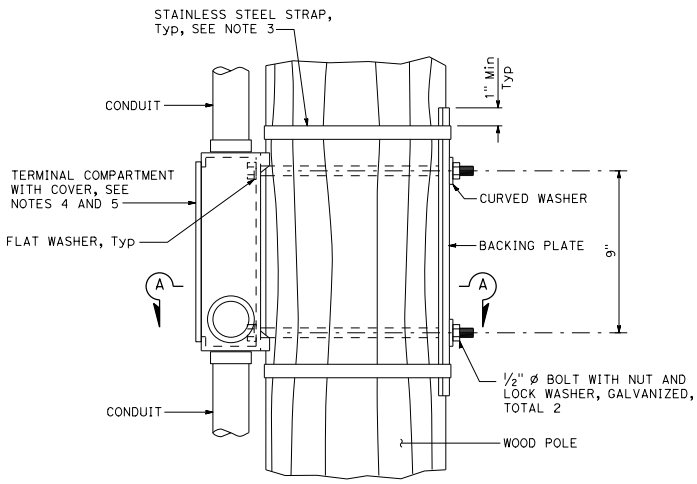

ELEVATION

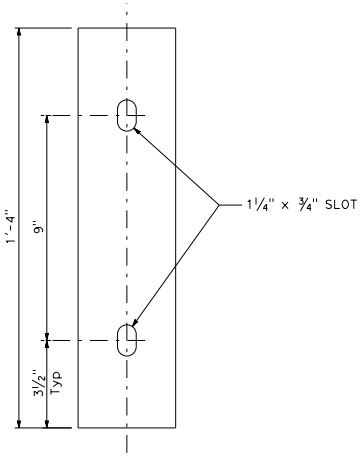

ELEVATION

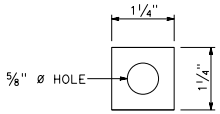

ELEVATION

NOTES:

1. Verify pole dimensions at terminal compartment for fabrication of backing plate and curved washer.
2. Backing plate to be galvanized after fabrication.
3. ¾" x 0.044" minimum, rounded edge stainless steel straps, double wrapped with 2" long bend under stainless steel strap buckle.
4. For miscellaneous details for signal mounting not shown, see Standard Plan ES-4D.
5. If the terminal compartment has a cable entry guide on the rear face, remove the cable entry guide to a level that will not interfere with the wood post. Close any unused cable entry locations with raintight cap.

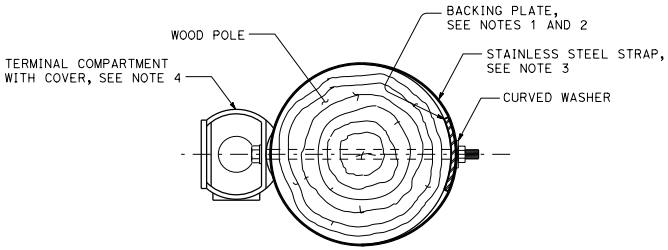

SECTION A-A

SIDE MOUNTING TERMINAL COMPARTMENT

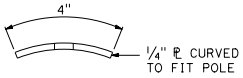

PLAN

BACKING PLATE DETAIL

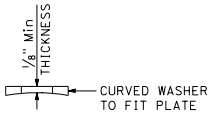

PLAN

CURVED WASHER DETAIL

STATE OF CALIFORNIA
DEPARTMENT OF TRANSPORTATION

TEMPORARY WOOD POLES DETAILS No. 4

NO SCALE

ES-19D

2026 STANDARD PLAN ES-19D

7-1-26

Return to Table of Contents

Dist	COUNTY	ROUTE	POST MILES TOTAL PROJECT	SHEET No.	TOTAL SHEETS

REGISTERED CIVIL ENGINEER

September 18, 2026
PLANS APPROVAL DATE

REGISTERED PROFESSIONAL ENGINEER
Mahesh Shrestha
No. C80133
Exp. 9-30-26
CIVIL
STATE OF CALIFORNIA

THE STATE OF CALIFORNIA OR ITS OFFICERS OR AGENTS SHALL NOT BE RESPONSIBLE FOR THE ACCURACY OR COMPLETENESS OF SCANNED COPIES OF THIS PLAN SHEET.

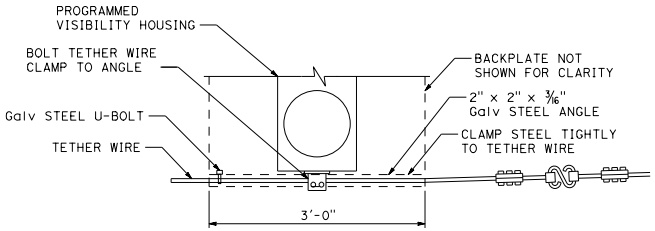

TETHER WIRE ATTACHMENT FOR PROGRAMMED VISIBILITY SIGNAL FACE

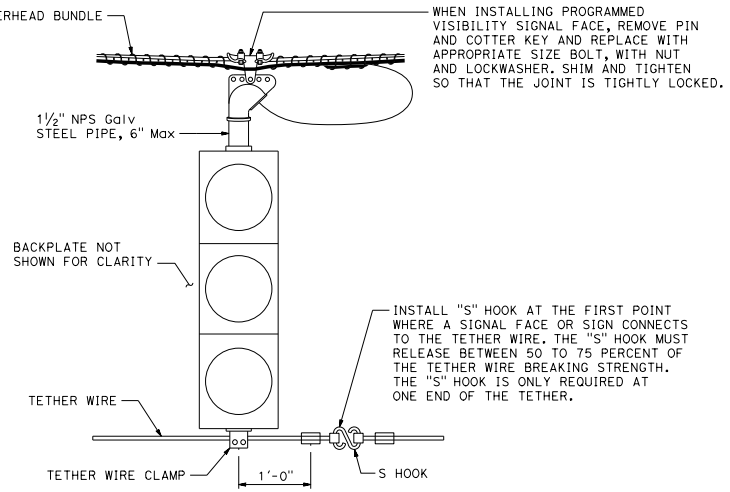

SIGNAL FACE SUPPORT

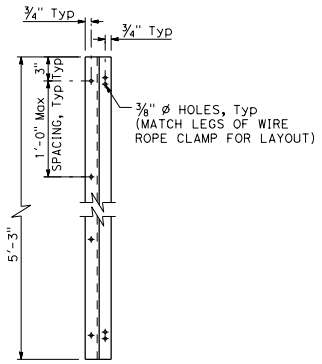

ELEVATION

ALUMINUM Z-BAR

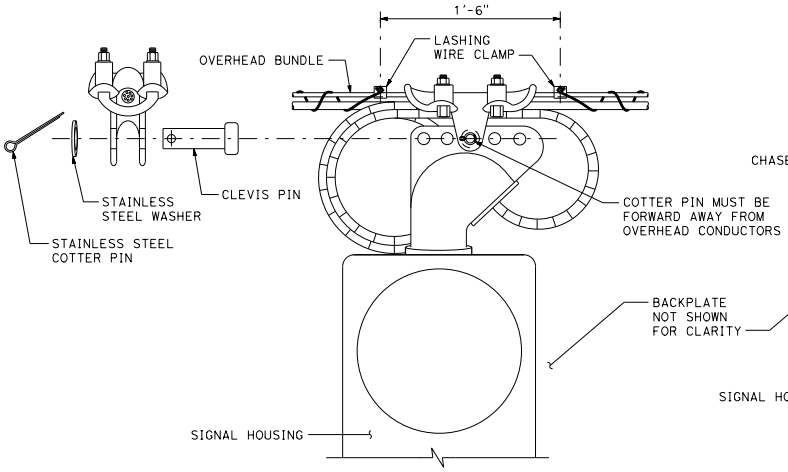

MESSENGER WIRE CLAMP COTTER PIN DETAIL

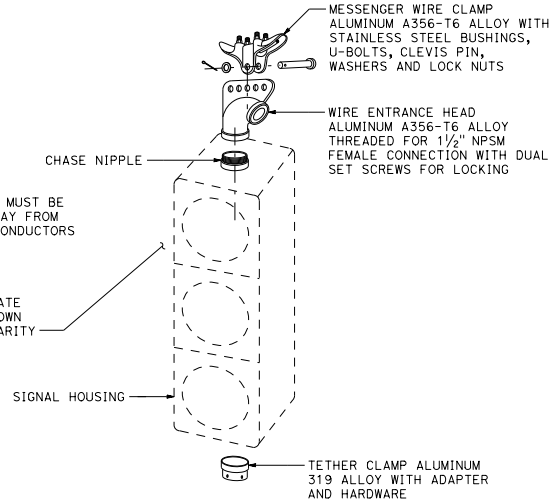

SIGNAL FACE SUPPORT EXPLODED VIEW

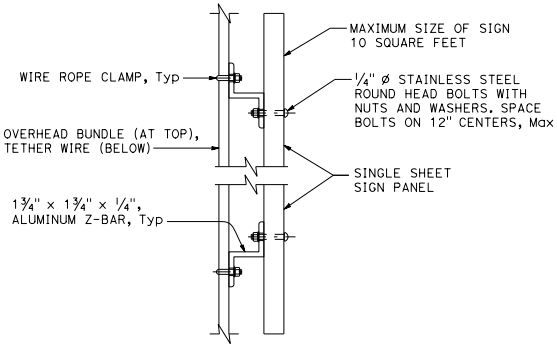

SIGN MOUNTING DETAIL

The overlapped connection of adjustable hangers must use a minimum of 2 bolts with a minimum spacing between bolts of 2".

STATE OF CALIFORNIA
DEPARTMENT OF TRANSPORTATION

TEMPORARY WOOD POLES DETAILS No. 5

NO SCALE

ES-19E

2026 STANDARD PLAN ES-19E

7-1-26

Return to Table of Contents