HUM 101 DRAINAGE SOUTH PROJECT

INITIAL STUDY

with Mitigated Negative Declaration
and Final Section 4(f) *de minimis* Evaluation



HUMBOLDT COUNTY, CALIFORNIA

DISTRICT 1 – HUM – 101 Post Miles 2.4 to M53.9

EA 01-0H640 / EFIS 01-1700-0245

Prepared by the
State of California Department of Transportation

April 2023



General Information About This Document

The California Department of Transportation (Caltrans) has prepared this Initial Study with Mitigated Negative Declaration (IS/MND) and Final Section 4(f) *de minimus* Evaluation which examines the potential environmental effects of the proposed project on United States Highway 101 in Humboldt County, California. Caltrans is the lead agency under the California Environmental Quality Act (CEQA). This document tells you why the project is being proposed, how the existing environment could be affected by the project, the potential impacts of the project, and proposed avoidance, minimization, and/or mitigation measures.

The draft IS/MND circulated to the public for 36 days between November 4, 2022, and December 9, 2022. One general comment was received from the Wiyot Tribe and is addressed in Sections 2.5 and 2.18 of this document. No other formal comments were received. Throughout this document, a vertical line in the margin indicates a change made since the draft document circulation.

The single major change includes removing location PM 0.88 from the project. As a result, all references to the box culvert at PM 0.88 (formerly Location 1) have been removed from this Final Environmental Document. The southerly limit of the project now begins at the southernmost location, which is now at PM 2.40. The final project now includes drainage systems at 38 locations. Location numbers that correspond with the drainage systems have been adjusted, with PM 2.40 now Location 1. Other changes include updated maps, layouts, reports, references, and citations, and some minor rearrangement of Section 2.4. Minor editorial changes and clarifications have not been marked.

Additional copies of this document and the related technical studies are available for review at the District 1 office or by request. This document and other project information may be downloaded from the following website:

- https://dot.ca.gov/caltrans-near-me/district-1/d1-projects/humboldt-101-drainage-south

For individuals with sensory disabilities, this document can be made available in Braille, in large print, on audiocassette, or on computer disk. To obtain a copy in one of these alternate formats, please write to or call Caltrans, Attention: Myles Cochrane, North Region Environmental-District 1, 1656 Union Street, Eureka, CA 95501; (707) 498-4272. Voice, or use the California Relay Service 1 (800) 735-2929 (TTY to Voice), 1 (800) 735-2922 (Voice to TTY), 1 (800) 855-3000 (Spanish TTY to Voice and Voice to TTY), 1-800-854-7784 (Spanish and English Speech-to-Speech) or 711.



HUM 101 DRAINAGE SOUTH PROJECT

Rehabilitate drainage systems at 38 locations on U.S. Highway 101 in Humboldt County, from Post Miles 2.4 to M53.9

INITIAL STUDY

with Mitigated Negative Declaration and Final Section 4(f) *de minimis* Evaluation

Submitted Pursuant to: Division 13, California Public Resources Code

THE STATE OF CALIFORNIA

Department of Transportation

4/10/2023

Date of Approval

Liza Walker

Liza Walker, Acting Office Chief
North Region Environmental–District 1
California Department of Transportation
CEQA Lead Agency

The following person may be contacted for more information about this document:

Julie Price, Caltrans North Region Environmental–District 1
1656 Union Street
Eureka, CA 95501
(707) 362-5431

or use the California Relay Service TTY number, 711 or 1-800-735-292.



MITIGATED NEGATIVE DECLARATION

Pursuant to: Division 13, California Public Resources Code

SCH Number: 2022110081

Project Description

The California Department of Transportation (Caltrans) proposes to rehabilitate drainage systems at 38 locations to good condition at various locations between Post Miles 2.40 and M53.85 on United States Highway 101 (US 101) in Humboldt County.

Determination

Caltrans has prepared an Initial Study for this project and, following public review, has determined from this study that the proposed project would not have a significant impact on the environment for the following reasons:

The project would have *No Effect* on:

- Aesthetics
- Agriculture and Forest Resources
- Air Quality
- Cultural Resources
- Energy
- Geology and Soils
- Hazards and Hazardous Materials
- Land Use and Planning
- Mineral Resources
- Noise
- Population and Housing
- Public Services
- Recreation
- Transportation
- Tribal Cultural Resources
- Utilities and Service Systems
- Wildfire

The project would have *Less than Significant Impacts* to:

- Greenhouse Gas Emissions
- Hydrology and Water Quality

With the following mitigation measures incorporated, the project would have *Less than Significant Impacts* to Biological Resources. Mitigation for permanent impacts to jurisdictional wetlands would be implemented.

- To compensate for impacts to state wetlands at the project site (CEQA Environmental Checklist Question 2.4c), Caltrans has utilized fen credits at the Fen Parcel located along State Route 36, between the towns of Bridgeville and Dinsmore, in the Lower Eel River and Lower Van Duzen River watersheds.

Liza Walker

Liza Walker, Acting Office Chief
North Region Environmental–District 1
California Department of Transportation

4/10/2023

Date

Table of Contents

PROPOSED MITIGATED NEGATIVE DECLARATION i

Table of Contents i

List of Appendices iii

List of Figures v

List of Tables v

List of Acronyms and Abbreviated Terms vii

Chapter 1. Proposed Project 1

1.1 Project History 1

1.2 Project Description 1

1.3 Permits and Approvals Needed 16

1.4 Standard Measures and Best Management Practices Included in All Alternatives 17

1.5 Discussion of the NEPA Categorical Exclusion 28

Chapter 2. CEQA Environmental Checklist 29

2.1 Aesthetics 34

2.2 Agriculture and Forest Resources 36

2.3 Air Quality 38

2.4 Biological Resources 40

2.5 Cultural Resources 85

2.6 Energy 87

2.7 Geology and Soils 88

2.8 Greenhouse Gas Emissions 90

2.9 Hazards and Hazardous Materials 116

2.10 Hydrology and Water Quality 118

2.11 Land Use and Planning 128

2.12 Mineral Resources 129

2.13 Noise 130

2.14 Population and Housing 132

2.15 Public Services 133
2.16 Recreation 134
2.17 Transportation 135
2.18 Tribal Cultural Resources 137
2.19 Utilities and Service Systems 139
2.20 Wildfire 141
2.21 Mandatory Findings of Significance 143
2.22 Cumulative Impacts 145

Chapter 3. Agency and Public Coordination 147

Chapter 4. List of Preparers 149

Chapter 5. Distribution List 151

Chapter 6. References 155

List of Appendices

APPENDIX A. **Project Layouts**

APPENDIX B. **Title VI Policy Statement**

APPENDIX C. **USFWS, NMFS, CNDDB, and CNPS Species Lists**

APPENDIX D. **Draft Mitigation Summary**

APPENDIX E. **Wild and Scenic Rivers Determination with Concurrence**

APPENDIX F. **Final Section 4(f) *de minimis* Evaluation with Concurrence**



List of Figures

Figure 1. Project Vicinity 3
Figure 2. Project Location Map 4
Figure 3. U.S. GHG Emissions in 2020 96
Figure 4. U.S. GHG Emissions by Economic Sector in 2020 97
Figure 5. California 2020 GHG Emissions by Scoping Plan Category 98
Figure 6. Change in California GDP, Population, and GHG Emissions since 2000 99
Figure 7. Projected Sea Level Rise at Northern Project Limits 111
Figure 8. Fire Hazard Severity Zone Map 114

List of Tables

Table 1. Proposed Work at Each Location 6
Table 2. Zoning within Project Limits 16
Table 3. Required Permits and Approvals 16
Table 4. Natural Communities/Land Cover Mapped in the ESL 46
Table 5. Summary of Potential Jurisdictional Waters of the U.S. within the ESL 47
Table 6. Temporary Impacts to Sensitive Natural Communities within the ESL 79
Table 7. Estimated Tree Removal within the ESL 80
Table 8. Impacts to Wetlands and Other Waters 82
Table 9. Estimated Average Construction Emissions in U.S. Tons 102
Table 10. Beneficial Uses of Surface Waters in the Project Area 121



List of Acronyms and Abbreviated Terms

Acronym/Abbreviation	Description
AB	Assembly Bill
ABMP	Additional Best Management Practices
ACE	Areas of Conservation Emphasis
APC	Alternative Pipe Culvert
BFE	Base Flood Elevation
BMPs	Best Management Practices
BSA	Biological Study Area
CAFE	Corporate Average Fuel Economy
CAL-CET	Caltrans Construction Emissions Tool
CAL FIRE	California Department of Forestry and Fire Protection
Cal-IPC	California Invasive Plant Council
Cal/OSHA	California Occupational Safety and Health Administration
Caltrans	California Department of Transportation
CAPTI	Climate Action Plan for Transportation Infrastructure
CARB	California Air Resources Board
CC	California Coastal (Chinook salmon)
CCR	California Code of Regulations
CDFW	California Department of Fish and Wildlife
CEHC	California Essential Habitat Connectivity
CEQA	California Environmental Quality Act
CESA	California Endangered Species Act
CFGC	California Fish and Game Code
CFR	Code of Federal Regulations
CGS	California Geological Survey
CH_4	methane
CIA	Cumulative Impact Analysis
CID	Culvert Inventory Database
CNDDB	California Natural Diversity Database
CNPS	California Native Plant Society
CO_2	carbon dioxide
CO_2e	carbon dioxide equivalent
COVID-19	Novel Coronavirus SARS-CoV2, coronavirus disease of 2019
CRPR	California Rare Plant Rank
CSP	Corrugated Steel Pipe
CTP	California Transportation Plan
CWA	Clean Water Act
dB	Decibels

Acronym/Abbreviation	Description
dbh	Diameter at Breast Height
DD	Downdrain
DED	Draft Environmental Document
DI	Drainage Inlet
DMR	Division of Mine Reclamation
DOT	Department of Transportation
DP	Director's Policy
DPS	Distinct Population Segment
DWQ	Department of Water Quality
EA	Expenditure Authorization
ECL	Environmental Construction Liaison
EFH	Essential Fish Habitat
EIR	Environmental Impact Report
EISA	Energy Independence and Security Act
EO(s)	Executive Order(s)
EPA	Environmental Protection Agency
ESA	Endangered Species Act
ESA(s)	Environmentally Sensitive Area(s)
ESL	Environmental Study Limits
ESU	Evolutionarily Significant Unit
ºF	degrees Fahrenheit
FEMA	Federal Emergency Management Agency
FES	Flared End Section
FESA	Federal Endangered Species Act
FHSZ	Fire Hazard Severity Zone
FHWA	Federal Highway Administration
FIRM	Flood Insurance Rate Map
FYLF	Foothill yellow-legged frog
"G"	Global
GDP	Gross Domestic Product
GHG	Greenhouse Gas
GWP	Global Warming Potential
H&SC	Health & Safety Code
HA	Hydrologic Area
HCAOG	Humboldt County Association of Governments
HFCs	hydrofluorocarbons
HMA	Hot Mix Asphalt
HSAs	Hydrologic Subareas
HTA	Humboldt Transit Authority
HU	Hydrologic Unit
IPCC	Intergovernmental Panel on Climate Change

Acronym/Abbreviation	Description
IS	Initial Study
IS/MND	Initial Study / Mitigated Negative Declaration
LCFS	Low Carbon Fuel Standard
LRA	Local Responsibility Area
LSAA	Lake and Streambed Alteration Agreement
MAMU	Marbled murrelet
MBTA	Migratory Bird Treaty Act
MLD	Most Likely Descendent
MMT	million metric tons
MMTC0_2e	million metric tons of carbon dioxide equivalent
MND	Mitigated Negative Declaration
MPO	Metropolitan Planning Organization
MS4	Municipal Separate Storm Sewer System
N_2O	nitrous oxide
NAGPRA	Native American Graves Protection and Repatriation Act of 1990
NAHC	Native American Heritage Commission
NCRWQCB	North Coast Regional Water Quality Control Board
NEPA	National Environmental Policy Act
NES	Natural Environment Study
NHTSA	National Highway Traffic and Safety Administration
NMFS	National Marine Fisheries Service
NOAA	National Oceanic and Atmospheric Administration
NOI	Notice of Intent
NPDES	National Pollutant Discharge Elimination System
NPS	National Park Service
NSO	Northern spotted owl
OPR	Governor's Office of Planning and Research
ORV	Outstandingly Remarkable Values
PBO	Programmatic Biological Opinion
PDT	Project Development Team
PIR	Project Initiation Report
PLOC	Programmatic Letter of Concurrence
PM(s)	post mile(s)
PM_{10}	particulate matter 10 microns or smaller
PRC	(California) Public Resources Code
Project	HUM 101 Drainage South Project
PS&E	Plans, Specifications, and Estimates
RCP	Representative Concentration Pathways 8.5 Emissions Scenario
RED	Rock Energy Dissipator
RSP	Rock Slope Protection
RTP	Regional Transportation Plan

Acronym/Abbreviation	Description
RWQCB	Regional Water Quality Control Board
“S”	State (ranking for Natural Communities of Special Concern)
SB	Senate Bill
SCS	Sustainable Communities Strategy
SF_6	sulfur hexafluoride
SFES	Steel Flared End Section
SHPO	State Historic Preservation Officer
SLR	Sea Level Rise
SNC	Sensitive Natural Community
SONCC	Southern Oregon/Northern California Coast
SR	State Route
SRA	State Responsibility Area
SSC	Species of Special Concern
SWPPP	Stormwater Pollution Prevention Plan
SWRCB	State Water Resources Control Board
TCE	Temporary Construction Easement
THVF	Temporary High Visibility Fencing
TMDLs	Total Maximum Daily Loads
TMP	Transportation Management Plan
U.S. or US	United States
US 101	U.S. (United States) Highway 101
USACE	United States Army Corps of Engineers
USC	United States Code
U.S. DOT	U.S. Department of Transportation
U.S. EPA	U.S. Environmental Protection Agency
USFWS	U.S. Fish and Wildlife Service
USGS	United States Geological Survey
VIA	Visual Impact Assessment
VMT	Vehicle Miles Traveled
VROOM	Variety in Rural Options of Mobility
WPCP	Water Pollution Control Program
WSP	Welded Steel Pipe
WQAR	Water Quality Assessment Report

Chapter 1. Proposed Project

1.1 Project History

District 1 Maintenance Engineering initiated 01-0H640 / HUM 101 Drainage South Project ("project") after identifying drainage systems along U.S. Highway 101 (US 101) with deficiencies that included perforated inverts, damaged inlets, and separated culvert segments. As these conditions were compromising the integrity of the roadway, the Project Initiation Report (PIR) initially proposed rehabilitating 40 drainage systems at 37 locations on US 101 between post miles (PMs) 0.00 and M54.00. The Transportation Management System elements and lighting work identified in the PIR have been removed from this project and incorporated into other projects. The culverts in this project were identified as needing repair/maintenance through the District's Culvert Inventory Database (CID) and field verification. Multiple field reviews were completed to confirm condition of the culverts.

During the Project Approval and Environmental Document (PA&ED) phase, it was determined that the box culvert at PM 0.88 would be removed from the project and addressed separately as a fish passage barrier removal project. All references to the box culvert at PM 0.88 (formerly Location 1) have therefore been removed from this Final Environmental Document. Accordingly, as currently proposed, the southerly limit of the project begins at PM 2.40, the northerly limit is at PM M53.85, and the location numbers that correspond with the drainage systems have been adjusted. The final project includes drainage systems at 38 locations. The Department of Transportation (Caltrans) is the lead agency under the California Environmental Quality Act (CEQA).

1.2 Project Description

Project Objective

Purpose

The purpose of this project is to preserve the roadway and prevent damage from storm events by repairing failing drainage systems.

Need

The Culvert Inspection Program identified locations with drainage systems that have exceeded their design life and need repair. The project is necessary to repair failed and deteriorated drainage systems and prevent potential roadway damage resulting from drainage system failures.

Existing Conditions

The proposed project is on US 101 in Humboldt County beginning at PM 2.40 and ending at PM M53.85 (Figures 1 and 2). The project site begins just north of Richardson Grove State Park and ends in Rio Dell. Within the project limits, the existing facility varies between a 2-lane conventional highway, a 4-lane freeway, and a 2-lane and 3-lane expressway. Some segments also include a passing lane. All project locations are in rural, mountainous areas along curvilinear alignments with shoulders widths varying from one to ten feet. Right of way widths extend from 26 feet to 480 feet from the centerline. Drainage systems flow through steep wooded hills and flow either directly or indirectly into Middle Fork Eel River or South Fork Eel River. Five drainage systems are located on or accessed through lands owned by California State Parks. Culverts included in the project have exceeded their design life and have perforated inverts, damaged inlets, and/or separated culvert segments and need rehabilitation or replacement.

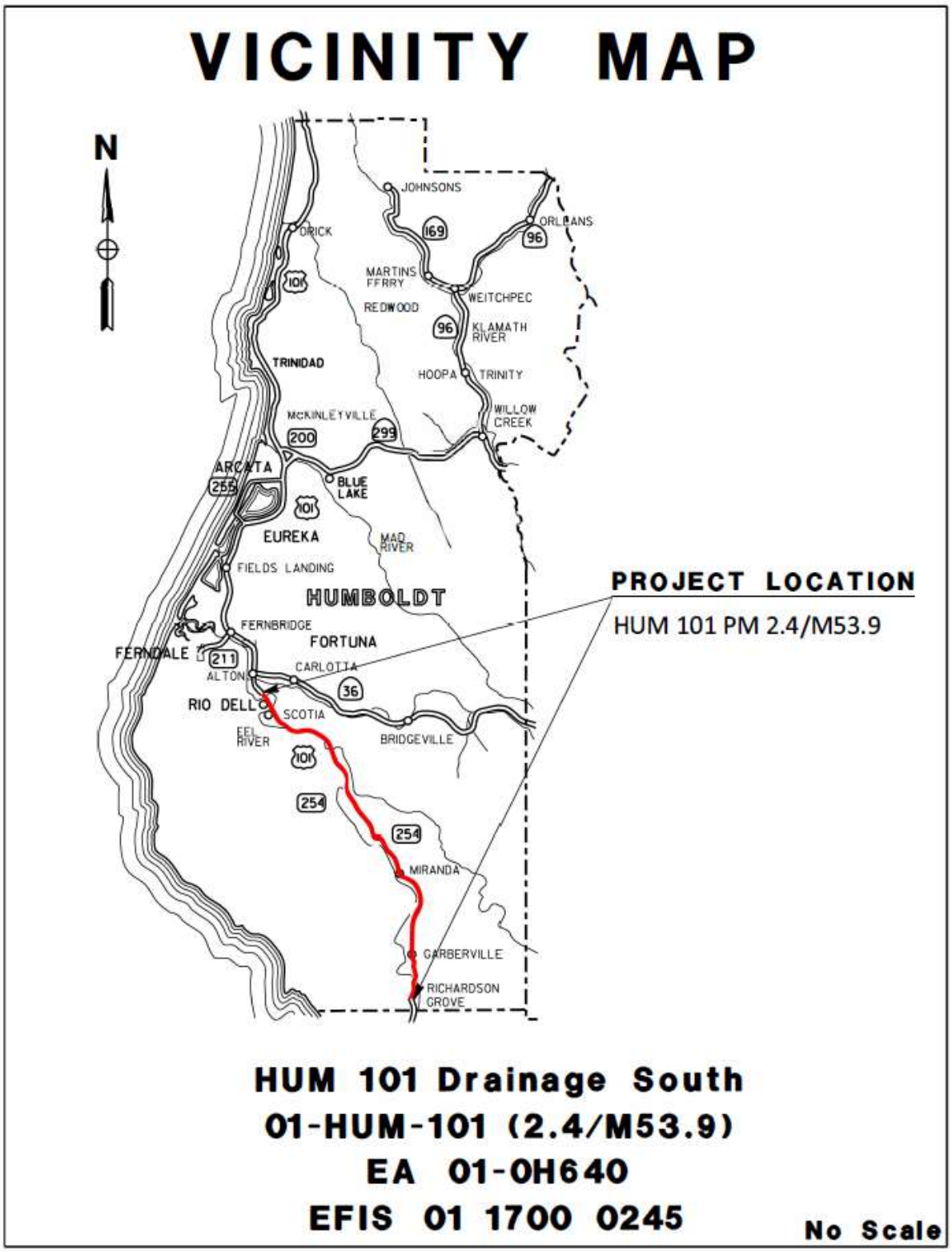

Figure 1. Project Vicinity



Figure 2. Project Location Map

Proposed Project

The project proposes to rehabilitate drainage systems at 38 locations on US 101 in Humboldt County from PMs 2.40 to M53.85. Most drainage systems would be rehabilitated by replacing culverts using the cut and cover method or jack and bore trenchless construction[1]. There are no identified existing fish passage obstructions at any project locations. Proposed work includes replacement of culverts, downdrains (DD), drainage inlets (DI), headwalls, end walls, and retaining walls, and installation of rock slope protection (RSP) and rock-lined ditch. Existing culverts would be replaced in-kind or upsized based on hydraulic conditions. Refer to Table 1 for proposed work at each location.

Work may include joint sealing, invert paving, culvert or drainage inlet repair using a Portland cement concrete material, regrading of drainage channels, repair of concrete or hot mix asphalt (HMA) ditches or paved aprons, and stabilizing embankment using fill or RSP. Most culvert excavations would vary from approximately 2 to 20 feet in depth, with two locations requiring depths of up to 35 feet.

Dewatering and water diversion may be necessary at some locations if water is present at the beginning of construction. Vegetation clearing and grubbing, branch trimming, and/or removal of trees would be required for construction access and culvert replacement activities at some locations. Revegetation would be conducted within disturbed soil areas to replace vegetation removed and for soil stabilization and erosion control. Temporary erosion control would be provided to meet water quality requirements. The project would be constructed in conformance with a Stormwater Pollution Prevention Plan.

Staging may occur on the paved roadway, and on paved and unpaved shoulders and pull-outs near work locations. Potential construction staging locations are identified at PMs 11.94, 14.28, 20.46, 20.70, 25.56, 25.77, 26.55, 26.78, 27.52, 28.02, 34.44, 35.96, 41.20, 40.70, 44.00, and 46.67. Ramp and lane closures would be necessary at multiple locations to complete work. Most of the work would occur within the existing State right of way. Some locations would involve work within existing drainage easements.

[1] The cut and cover method would involve cutting and removing the original pavement and soil above the culvert, removing the old pipe, placing a new pipe, then covering the trench and paving to match the existing road level. The jack and bore trenchless method would involve decommissioning the old pipe by filling with concrete and then installing a new pipe using a machine to bore through the ground and push a new pipe into place.

New permanent drainage easements and temporary construction easements (TCEs) would be required at some locations. Refer to project layout sheets in Appendix A for the scope and limits of proposed work. Table 1 summarizes the proposed work at each drainage system location. The proposed work presented here is based on preliminary designs and will continue to be refined until project plans are completed at the "Ready to List" phase scheduled for spring of 2024.

Table 1. Proposed Work at Each Location

Location	Post Mile	Method	Proposed Work
1	2.40	Cut & Cover	Remove headwall, 36″-diameter x 104'-long corrugated steel pipe (CSP), rock energy dissipator (RED), existing concrete slab beneath the RED, and a ±24″-dbh tan oak tree. Abandon 36″-diameter x 60′-long CSP. Install headwall, cable railing, 36″-diameter x 76'-long alternative pipe culvert (APC), 36″-diameter x 76'-long CSP downdrain (DD), manhole, three elbows, 36″-diameter anchor assembly, gravel filter, and rock slope protection (RSP). Place hot mix asphalt (HMA), embankment, and aggregate base in various areas.
2	R7.51	Cut & Cover	Remove 42″-diameter x 30′-long CSP, inlet, 42″-diameter x 20′-long CSP DD, and 12″-diameter x 8′-long CSP (standpipe). Abandon 12″-diameter x 15′-long CSP (standpipe) and 42″-diameter x 406′-long CSP. Install 42″-diameter x 369'-long CSP, three elbows, two 42″-diameter anchor assemblies, drainage inlet (DI), 42″-diameter x 95'-long CSP DD, RSP, and 42″-diameter steel flared end section (SFES). Place minor concrete to repair the concrete-lined ditch (in-kind) at the initial inlet. Engineering shoring plan required for deep cut.
3	R13.39	Cut & Cover	Remove inlet, 18″-diameter x 60'-long CSP, 18″-diameter x 20'-long CSP DD. Abandon 18″-diameter x 68'-long CSP. Install DI, 24″-diameter x 105'-long CSP, two 24″-diameter anchor assemblies, 24″-diameter x 39'-long CSP DD, gravel filter, RSP, and two elbows.

Location	Post Mile	Method	Proposed Work
4	R15.64	Cut & Cover	Remove 42″-diameter x 200′-long CSP. Install gravel filter, RSP, headwall, cable railing, and 54″-diameter x 202′-long APC. May need dewatering.
5	R16.09	Cut & Cover	Remove inlet and 30″-diameter x 120′-long CSP. Install DI, 42″-diameter x 122′-long APC, RSP, and gravel filter.
6	R16.44	Cut & Cover	Remove 24″-diameter x 93′-long CSP, inlet, and concrete-lined ditch. Install 48″-diameter SFES, 48″-diameter x 95′-long APC, RSP, and gravel filter.
7	R17.54	Cut & Cover	Remove 30″-diameter x 76′-long CSP, 18″-diameter x 174′-long CSP DD, 18″-diameter SFES, and inlet. Abandon 30″-diameter x 138′-long CSP. Install 24″-diameter SFES, three elbows, 24″-diameter x 174′-long CSP DD, 36″-diameter x 78′-long CSP DD, 24″-diameter anchor assembly, 36″-diameter anchor assembly, 36″-diameter x 140′-long APC, DI, and embankment. May need dewatering.
8	R17.76	Cut & Cover	Remove 18″-diameter x 451′-long CSP, 36″-diameter x 204′-long CSP, two inlets, 18″-diameter x 49′-long CSP DD, and two 18″-diameter SFES. Install six DIs, 24″-diameter x 347′-long APC, elbow, 24″-diameter x 48′-long CSP DD, and 36″-diameter x 200′-long APC. Install concrete-lined swale to connect to existing concrete-lined ditch.
9	R18.25	Cut & Cover	Remove 24″-diameter SFES, 24″-diameter x 373′-long CSP DD, steel pipe inlet, and 24″-diameter x 75′-long CSP. Install ten elbows, 24″-diameter x 369′-long CSP DD, DI, 24″-diameter x 76′-long APC, three 24″-diameter anchor assemblies, gravel filter, RSP, and 24″-diameter SFES. May need dewatering.
10	R19.43	Cut & Cover and Trenchless	Remove 30″-diameter SFES. Abandon 30″-diameter x 411′-long CSP. Install 60″-diameter SFES, 60″-diameter x 367′-long welded steel pipe (WSP), gravel filter, and rock-lined ditch.

Location	Post Mile	Method	Proposed Work
11	R20.63	Cut & Cover	Remove 18″-diameter x 16′-long CSP DD, 18″-diameter SFES, inlet, and 18″-diameter x 91′-long CSP. Install 24″-diameter SFES, embankment, 24″-diameter x 15′-long CSP DD, steel pipe inlet, 24″-diameter x 95′-long APC, and elbow. Place minor concrete as backfill.
12	23.46	Cut & Cover	Remove 24″-diameter SFES, 24″-diameter x 44′-long CSP DD, 24″-diameter x 86′-long CSP, and inlet. Install 24″-diameter SFES, embankment, DI, 24″-diameter anchor assembly, 24″-diameter x 43′-long CSP DD, elbow, and 24″-diameter x 86′-long APC.
13	26.16	Cut & Cover	Remove inlet, 30″-diameter x 12′-long CSP DD, and 30″-diameter x 87′-long CSP. Potentially remove one 14″-dbh California bay tree. Install DI, 36″-diameter x 11′-long CSP DD, 36″-diameter x 87′-long APC, and elbow. Improve existing concrete RSP.
14	26.78	Cut & Cover	Remove one ≤10″-dbh redwood tree, inlet, 24″-diameter x 92′-long CSP, and 24″-diameter x 76′-long CSP DD. Install DI, elbows, 24″-diameter anchor assembly, 24″-diameter x 42′-long CSP DD, 24″-diameter x 92′-long CSP, gravel filter, and RSP.
15	27.52	Cut & Cover	Remove retaining wall, inlet, 18″-diameter x 51′-long CSP DD, and 18″-diameter x 88′-long CSP. Install DI, three elbows, 24″-diameter anchor assembly, 24″-diameter x 51′-long CSP DD, 24″-diameter x 83′-long APC, gravel filter, and RSP.
16	33.23	Cut & Cover	Remove junction box, inlet, headwall, 18″-diameter x 103′-long CSP, and 42″-diameter x 127′-long CSP. Install minor concrete, two DIs, 24″-diameter x 102′-long APC, 42″-diameter x 131′-long APC, two cable railings, and two straight headwalls. May need dewatering and clear water diversion.

Location	Post Mile	Method	Proposed Work
17	34.77	Cut & Cover	Remove one 22″-dbh Douglas-fir tree, one 17″-dbh redwood tree, 24″-diameter x 32′-long CSP DD, inlet, 18″-diameter x 93′-long CSP DD, 12″-diameter x 386′-long CSP DD, and 24″-diameter x 90′-long CSP. Install gravel filter, RSP, two embankments, two 24″-diameter anchor assemblies, DI, 24″-diameter x 92′-long APC, 24″-diameter x 168′-long CSP DD, and two 24″-diameter SFES. May need dewatering and clear water diversion.
18	35.00	Cut & Cover	Remove three redwood trees (7″, 14″ and 23″-dbh), 24″-diameter x 185′-long CSP, inlet, and two 24″-diameter SFES. Install embankment, 24″-diameter x 307′-long CSP DD, DI, three 24″-diameter anchor assemblies, 24″-diameter tee, 24″-diameter x 84′ -long APC, RSP, and two 24″-diameter SFES.
19	37.64	Cut & Cover and Trenchless	Remove one 16″-dbh Douglas-fir tree, 30″-diameter x 30′-long CSP, 18″-diameter x 35′-long CSP DD, 18″-diameter x 54′-long CSP, 18″-diameter SFES, 30″-diameter SFES, and 30″-diameter x 42′-long CSP DD. Abandon 30″-diameter x 150’-long CSP. Install 24″-diameter SFES, 42″-diameter SFES, 24″-diameter x 31′-long CSP DD, 24″-diameter x 54′-long APC, 42″-diameter x 153′-long WSP, two elbows, embankment, and RSP. Replace DI (in-kind). Fill to increase elevation at the inlet approach. Repair eroded area at the inlet.
20	39.01	Cut & Cover and Trenchless	Remove one 10″-dbh redwood tree, 24″-diameter SFES, 24″-diameter x 40′-long CSP, and 24″-diameter x 123′-long CSP DD. Abandon 24″-diameter x 200′-long CSP. Install 24″-diameter SFES, 36″-diameter SFES, 36″-diameter x 162′-long WSP, 161′ rock-lined ditch, embankment, and 24″-diameter x 36′-long CSP DD.
21	R39.23	Cut & Cover	Remove 24″-diameter SFES, 30″-diameter x 43′-long CSP, 24″-diameter x 14′-long CSP DD, and inlet. Install shallow rock-lined ditch, DI, embankment, and 36″-diameter x 43′-long APC.

Location	Post Mile	Method	Proposed Work
22	R39.65	Cut & Cover and Trenchless	Remove one 12″-dbh Oregon ash tree, headwall, 30″-diameter x 92′-long CSP, and inlet. Abandon 30″-diameter x 245′-long CSP. Perform miscellaneous roadway excavation. Install headwall, 36″-diameter x 266′-long WSP, DI, 36″-diameter x 73′-long APC, rock-lined ditch, and embankment. Replace overside drain. May need dewatering and clear water diversion.
23	R40.38	Cut & Cover	Remove two inlets, 18″-diameter x 65′-long CSP, and 18″-diameter x 208′-long CSP DD. Install two DI, 24″-diameter x 64′-long APC, 24″-diameter x 20′-long CSP, four elbows, 24″-diameter anchor assembly, 65′-long rock-lined channel, and 24″-diameter x 132′-long CSP DD. Replace dike (in-kind).
24	R41.45	Cut & Cover	Remove 18″-diameter x 84′-long CSP and 18″-diameter x 74′-long CSP DD. Install 24″-diameter SFES, 24″-diameter x 87′-long APC, two elbows, 24″-diameter x 77′-long CSP DD, embankment, and RSP.
25	R41.69	Cut & Cover	Remove inlet, 18″-diameter x 112′-long CSP DD, 18″-diameter x 120′-long CSP, and 18″-diameter SFES. Install three elbows, DI, 24″-diameter x 120′-long CSP, 24″-diameter x 90′-long CSP DD, 24″-diameter anchor assembly, RSP, miscellaneous backfill to rebuild embankment, and 24″-diameter SFES.
26	R42.12	Cut & Cover	Remove inlet, 24″-diameter x 53′-long CSP DD, and 24″-diameter x 108′-long CSP. Install 24″-diameter anchor assembly, two elbows, DI, 24″-diameter x 131′-long APC, 24″-diameter x 46′-long CSP DD, and RSP. Perform ditch excavation and grade to drain.
27	R42.34	Cut & Cover	Remove several ≤6″-dbh redwood trees to access the inlet point. Patch and repair concrete headwall and pave the invert (bottom) of existing 4.5′-wide x 5.2′-tall x 264′-long elliptical CSP. Install rocks to raise the flow line and reduce pooling at the inlet. May need dewatering and clear water diversion.

Location	Post Mile	Method	Proposed Work
28	R43.17	Cut & Cover	Remove headwall, inlet, 24″-diameter x 55′-long CSP, and 24″-diameter x 13′-long CSP DD. Abandon 24″-diameter x 84′-long CSP. Install 36″-diameter anchor assembly, two elbows, 36″-diameter x 22′-long CSP DD, RSP, 36″-diameter x 127′-long APC, embankment, and DI.
29	R43.35/ 43.37	Cut & Cover	Remove two 18″-diameter SFES and 18″-diameter x 175′-long CSP. Install two 24″-diameter SFES, 24″-diameter x 161′-long APC, RSP, and embankment to re-direct channel flow. Grade approach to inlets.
30	R43.54	Trenchless	Remove one ≤8″-dbh tree and 18″-diameter x 30′-long CSP. Abandon 18″-diameter x 159′-long CSP. Install 60″-diameter x 185′-long WSP.
31	R44.17	Cut & Cover	Remove 36″-diameter SFES, 36″-diameter x 153′-long CSP, and inlet. Install 42″-diameter SFES, 42″-diameter x 153′-long APC, RSP, and DI.
32	R45.25	Cut & Cover	Remove two pipe inlets and 18″-diameter x 124′-long CSP. Install 24″-diameter x 125′-long APC, and two DI. Replenish existing RSP.
33	R47.01	Trenchless	Remove nine trees (12″ and 16″-dbh alders; 8″, 10″, 10″, 21″ and 16″-dbh redwoods; and two 15″-dbh maples), 54″-diameter SFES, and 54″-diameter x 115′-long CSP. Abandon 54″-diameter x 316′-long CSP. Install 60″-diameter SFES, DI, 60″-diameter x 78′-long APC, and 60″-diameter x 317′-long WSP. Repair eroded area at the inlet by raising flow line elevation approximately 6′ and improve and extend existing RSP. Anticipate a clear water diversion.
34	R49.86	-	Re-abandon 18″-diameter x 91′-long CSP. Restore stream at inlet by raising flow line elevation approximately 3′.
35A	R52.49	Cut & Cover	Remove two inlets and 18″-diameter x 117′-long CSP. Install two DI, and 24″-diameter x 117′-long APC. Connect DI to existing 18″-diameter CSP.
35B	R52.92	Cut & Cover	Remove junction box, pipe inlet, and 18″-diameter x 270′-long CSP. Install two DIs, and 24″-diameter x 269′-long APC.

Location	Post Mile	Method	Proposed Work
36	M53.85	Cut & Cover	Remove two inlets, junction box, 18″-diameter x 132′-long CSP, concrete FES, and 24″-diameter x 355′-long CSP. Install two DIs, manhole, and 24″-diameter x 485′-long APC.

Construction Scenarios

Prior to construction, site preparation would include delineating construction work areas, installing temporary high visibility fencing (THVF) around sensitive habitats and known cultural resource areas, implementing Best Management Practices (BMPs) in accordance with the project's Stormwater Plan, and removing vegetation.

All work, regardless of method, would begin with the following six steps:

1. Set up temporary traffic control using portable delineators and traffic signs for single lane, pullout, and/or ramp closure as required.
2. Set up staging areas in designated pullouts as well as within the existing closed portion of the roadbed.
3. Set up project erosion control BMPs, as needed.
4. Conduct nesting bird surveys as needed for vegetation clearing.
5. Conduct minor vegetation removal. May require small equipment such as a bobcat and trimming/removal equipment.
6. Set up clear water diversion and/or perform dewatering, as needed.

Cut and Cover Installation

The maximum depth of excavation would be 20 feet without an engineered shoring plan, 35 feet with an engineered shoring plan, and the width would be the diameter of the pipe with roughly 24 inches on each side of the pipe.

Following Steps 1-6 above, replacement of culverts via the cut and cover method would generally include the following steps:

- Sawcut or grind existing roadway one traffic lane at a time (half width construction).
- Conduct culvert improvements one half at a time (half width construction).
    - Excavate trench using an excavator.
    - Remove or abandon existing culvert, inlets, and associated drainage structures per plan using a crane, excavator, dump truck or bobcat.
    - Install new culverts using a crane, backhoe, loader, bobcat, or compactor.
    - Construct inlets, headwalls, wingwalls, downdrains, and outfalls per plan using a crane, excavator, bobcat, and compactors as needed. Concrete truck would operate from closed traffic lane with potential use of concrete pump.
- Remove clear water diversion, as needed.
- Replace or install RSP as needed or fill under the downdrain using excavator, bobcat, skip loader, or boom truck.
- At locations where culverts would be realigned, backfill existing culvert location with structural backfill (i.e., soil or fill from excavated area for new culvert location).
- Restore asphalt using a paver and pavement striper.
- Restore site, including placing erosion control measures.

Jack and Bore Trenchless Installation

Following Steps 1-6 above, replacement of culverts via the jack and bore trenchless method would generally include the following steps:

- Excavate and remove 10 to 30 feet of existing pipe at inlet and outlet. Pump cement/sand mixture (slurry) into remaining existing pipe (abandon culvert) using cement trucks and cement pump truck as needed on adjacent roadway or staging area. Slurry fill would require multiple lifts to fill entire abandoned culvert.
- Cover abandoned culvert using native material or imported fill designated by the landscape architect. Dig a sending and a receiving pit to the required depth for boring equipment.
- Place a jack and bore machine into the sending pit.

- Use the machine to cut a hole through the ground and push the new pipe in place.
- Remove the jack and bore machine.
- Connect the new welded steel pipe to drain inlet or downdrain.
- Install additional system components (DI, downdrains, pipe reducers, and anchorage systems).
- Backfill equipment pit if necessary.
- Conduct quality control inspections.
- Remove clear water diversion, as needed.
- Replace or install rock slope protection (RSP) as needed or fill under the downdrain using excavator, bobcat, skip loader, or boom truck.
- Restore site, including placing erosion control measures.

Construction Schedule

There are 220 working days currently proposed for the project. The working days are divided among the 38 locations with 5 to 20 working days estimated per location. Construction would be conducted over two seasons beginning in 2024 through 2026.

Work Windows

Work windows to avoid impacts to sensitive biological resources are provided in Section 1.4. The following seasonal restrictions are anticipated:

- All work in jurisdictional waters within the project area would be restricted to June 15 to October 15 of the construction season. Work within drainage systems where water may be present would be scheduled later in the season, as feasible, to minimize the number of locations where dewatering and/or water diversion would be required.
- Tree and vegetation removal would occur between September 16 and January 31, outside of the bird breeding season. If vegetation removal cannot be done in this window, then surveys by a qualified biologist would be required prior to the removal of vegetation.
- Seasonal noise restrictions for marbled murrelet and Northern spotted owl would apply to work conducted between February 1 and September 15.

- No potential Pacific fisher den trees would be removed during the critical denning period (March 1 and July 31).

Preferred Alternative

Under the No-Build Alternative, no alterations to the existing conditions would occur and the proposed improvements would not be implemented. For each potential impact area discussed in Chapter 2, the No-Build Alternative has been determined to have no impact. After the public circulation period, having received no comments, the proposed project (also known as the Build Alternative) was selected, finding that environmental impacts would be less than significant, and the purpose and need of the project would be fulfilled. The No-Build Alternative was not selected, as it would not have achieved the purpose and need of the project.

General Plan Description, Zoning, and Surrounding Land Uses

The project area and surrounding lands are within Humboldt County, spanning approximately 52 miles of the US 101 corridor from 2.4 miles north of the Mendocino County line to the north end of the city of Rio Dell. The project is bounded by rural residential, residential, and industrial lands; Benbow Lake State Recreation Area; Humboldt Redwoods State Park; John B. Dewitt Redwoods State National Reserve; Richardson Grove State Park; and undeveloped forested lands. Lands within the project corridor are predominantly zoned for timber, agriculture, State Parks, commercial, and residential uses.

The majority of adjacent lands are in the Unclassified zone–rural areas that allow for general agriculture and residential uses, often adjacent to Timber Production Zones, Agriculture General or Agriculture Exclusive zones. Table 2 provides a list of the zoning districts that correspond with drainage system locations. The entire project is outside of the Coastal Zone.

Table 2. Zoning within Project Limits

Adjacent Zoning	Drainage System
Agriculture Exclusive	5, 6, 7, 33
Community Commercial	8, 22
Flood Plain	10
Heavy Industrial	21
Industrial/Commercial	36
Public Facility	8, 9, 10, 11, 12
Residential One-Family	16
State Park	20
Timber Production Zone	8, 10, 24, 25
Unclassified	1, 2, 3, 4, 5, 6, 7, 13, 14, 15, 17, 18, 19, 23, 24, 25, 26, 27, 28, 29, 30, 31, 32, 34
Urban Residential	35, 36

1.3 Permits and Approvals Needed

The following table indicates the permitting agency, permits/approvals and status of permits required for the project. No formal comments were received from resource agencies during the public comment period.

Table 3. Required Permits and Approvals

Agency	Permit/Approval	Status
California Department of Fish and Wildlife (CDFW)	Lake or Streambed Alteration Agreement	Submit after project approval
Regional Water Quality Control Board (RWQCB)	401 Water Quality Certification, Notice of Intent for coverage under the Construction General Permit	Submit after project approval
U.S. Army Corps of Engineers (USACE)	404 Certification	Submit after project approval
National Marine Fisheries Service (NMFS)	Programmatic Biological Opinion	Submitted/received 11/4/2022
U.S. Fish and Wildlife Service (USFWS)	Programmatic Letter of Concurrence	Submitted/received 11/9/2022
National Park Service (NPS)	Wild and Scenic Rivers Act “No Effect” Concurrence	Received 12/12/2022
California State Parks	Scientific Research Permits	Approved and completed

Agency	Permit/Approval	Status
California State Parks	Right of Entry Permits	Submit after project approval
California State Parks	Section 4(f) *de minimis* Concurrence	Received 04/04/2023

For projects that have federal funds involved, Section 4(f) of the U.S. Department of Transportation (USDOT) Act of 1966 prohibits the Federal Transit Administration and other USDOT agencies from using land from publicly owned parks, recreation areas (including recreational trails), wildlife and water fowl refuges, or public and private historic properties, unless there is no feasible and prudent alternative to that use and the action includes all possible planning to minimize harm to the property resulting from such a use. This project has federal funds and would require the temporary and permanent use of a Section 4(f) resource. California State Parks has concurred with the Caltrans *de minimis* determination. See Appendix F for more information.

Projects affecting Wild and Scenic Rivers are subject to the National Wild and Scenic Rivers Act (16 United States Code [USC] 1271) and the California Wild and Scenic Rivers Act (CA Public Resources Code [PRC] § 5093.50 et seq.). The South Fork Eel River and main stem of the Eel River are designated as National and State Wild and Scenic River Systems. Stream reaches within the project area are classified as "Recreational" under the Wild and Scenic Rivers Act. The "Recreational" classification allows for the utilization of river resources as long as the Outstandingly Remarkable Values (ORV) are protected. The ORV of the Eel River System are Fisheries and Recreational. The National Park Service concurs with the Caltrans determination that the project will not alter the river's ability to meet the criteria that classify it as "Recreational," and will not have a permanent effect on water quality, the free-flowing characteristics of the Eel River, or its ORV. See Appendix E for more information.

1.4 Standard Measures and Best Management Practices

Under CEQA, "mitigation" is defined as avoiding, minimizing, rectifying, reducing/ eliminating, and compensating for an impact. In contrast, Standard Measures and Best Management Practices (BMPs) are prescriptive and sufficiently standardized to be generally applicable, and do not require special tailoring for a project. They are measures that typically result from laws, permits, agreements, guidelines, and resource management plans. For this reason, the measures and practices are not considered "mitigation" under CEQA; rather, they are included as part of the project description in environmental documents.

The following section provides a list of project features, standard practices (measures), and Best Management Practices (BMPs) that are included as part of the project description. These avoidance and minimization measures are prescriptive and sufficiently standardized to be generally applicable and do not require special tailoring to a project situation. These are generally measures that result from laws, permits, guidelines, resource management plans, and resource agency directives and policies. They predate the project's proposal and apply to all similar projects. For this reason, these measures and practices do not qualify as project mitigation, and the effects of the project are analyzed with these measures in place. Any project-specific avoidance, minimization, or mitigation measures that would be applied to reduce the effects of project impacts are listed in relevant sections of Chapter 2.

In addition to the standard measures and BMPs listed below, Additional Best Management Practices (ABMPs) associated with project-specific actions outlined in the *Programmatic Biological Opinion for Caltrans' Routine Maintenance and Repair Activities in Districts 1, 2, and 4* (PBO) (NMFS 2013) would be implemented as applicable.

Standard measures relevant to the protection of natural resources deemed applicable to the proposed project include:

Aesthetics

AR-1: Temporary access roads, construction easements, and staging areas that were previously vegetated would be restored to a natural contour and revegetated with regionally-appropriate native vegetation.

AR-2: Where feasible, construction lighting would be temporary, and directed specifically on the portion of the work area actively under construction.

AR-3: Where feasible, the removal of established trees and vegetation would be minimized. Environmentally sensitive areas (ESAs) would have Temporary High Visibility Fencing (THVF) installed before start of construction to demarcate areas where vegetation would be preserved and root systems of trees protected.

Biological Resources

BR-1: General

Before start of work, as required by permit or consultation conditions, a Caltrans biologist or Environmental Construction Liaison (ECL) would meet with the contractor to brief them on environmental permit conditions and requirements relative to each stage of the proposed project, including, but not limited to, work windows, drilling site management, and how to identify and report regulated species within the project areas.

BR-2: Animal Species

A. To protect migratory and nongame birds (occupied nests and eggs), if possible, vegetation removal would be limited to the period outside of the bird breeding season (removal would occur between September 16 and January 31). If vegetation removal is required during the breeding season, a nesting bird survey would be conducted by a qualified biologist within one week prior to vegetation removal. If an active nest is located, the biologist would coordinate with CDFW to establish appropriate species-specific buffer(s) and any monitoring requirements. The buffer would be delineated around each active nest and construction activities would be excluded from these areas until birds have fledged, or the nest is determined to be unoccupied.

B. Pre-construction surveys for active raptor nests within one-quarter mile of the construction area would be conducted by a qualified biologist within one week prior to initiation of construction activities. Areas to be surveyed would be limited to those areas subject to increased disturbance because of construction activities (i.e., areas where existing traffic or human activity is greater than or equal to construction-related disturbance need not be surveyed). If any active raptor nests are identified, appropriate conservation measures (as determined by a qualified biologist) would be implemented. These measures may include, but are not limited to, establishing a construction-free buffer zone around the active nest site, biological monitoring of the active nest site, and delaying construction activities near the active nest site until the young have fledged.

C. To prevent attracting corvids (birds of the *Corvidae* family which include jays, crows, and ravens), no trash or foodstuffs would be left or stored on-site. All trash would be deposited in a secure container daily and disposed of at an approved waste facility at least once a week. Also, on-site workers would not attempt to attract or feed any wildlife.

D. A qualified biologist would monitor in-stream construction activities that could potentially impact sensitive biological receptors (e.g., amphibians, fish). The biological monitor would be present during activities such as installation and removal of dewatering or diversion systems, demolition, pile-driving and hoe-ramming, and drilling for culvert foundations to ensure adherence to permit conditions. In-water work restrictions would be implemented. An Aquatic Species Relocation Plan, or equivalent, would be prepared by a qualified biologist and include provisions for pre-construction surveys and the appropriate methods or protocols to relocate any species found. If previously unidentified threatened or endangered species are encountered or anticipated incidental take levels are exceeded, work would either be stopped until the species is out of the impact area, or the appropriate regulatory agency would be contacted to establish steps to avoid or minimize potential adverse effects. This Plan may be included as part of the Temporary Creek Diversion System Plan identified in **BR-5**.

E. Artificial night lighting may be required. To reduce potential disturbance to sensitive resources, lighting would be temporary and directed specifically on the portion of the work area actively under construction. Use of artificial lighting would be limited to California Occupational Safety and Health Administration (Cal/OSHA) work area lighting requirements. Any night work would be subject to the county noise limitation of 86 decibels (dB) at 49 feet (15 meters).

F. A Limited Operating Period would be observed, whereby all in-stream work below ordinary high water would be restricted to the period between June 15 and October 15 to protect water quality and vulnerable life stages of sensitive fish species.

G. To protect nesting or roosting northern spotted owl and marbled murrelet, suitable northern spotted owl or marbled murrelet nesting trees would be removed between September 16 and January 31. No construction activities generating sound levels 20 or more decibels (dB) above ambient sound or with maximum sound levels (ambient sound level plus activity-generated sound level) above 90 dB (with the exception of backup alarms) would occur between February 1 and August 5. Between August 6 and September 15, work that generates sound levels equal to or greater than 10 dB above ambient sound levels or above 90 dB max would observe a daily work window beginning 2 hours post-sunrise and ending 2 hours pre-sunset. Sound-related work windows would be lifted between September 16 and January 31. Further, no construction activities would occur within a visual line-of-sight of 328 feet or less (or consult with USFWS as needed) from any known active nest locations for northern spotted owl or marbled murrelet.

H. Caltrans would contact USFWS if proposed NSO/MAMU habitat removal is within the designated critical habitat area to ensure removal would not result in an adverse effect.

BR-3: Invasive Species

Invasive non-native species control would be implemented. Measures would include:

- Straw, straw bales, seed, mulch, or other material used for erosion control or landscaping which would be free of noxious weed seed and propagules.

- All equipment would be thoroughly cleaned of all dirt and vegetation prior to entering the job site to prevent importing invasive non-native species. Project personnel would adhere to the latest version of the *California Department of Fish and Wildlife Aquatic Invasive Species Cleaning/Decontamination Protocol (Northern Region)* for all field gear and equipment in contact with water.

BR-4: Plant Species and Sensitive Natural Communities

A. A Revegetation Plan would be prepared which would include a plant palette, establishment period, watering regimen, monitoring requirements, and pest control measures. The Revegetation Plan would also address measures for wetland and riparian areas temporarily impacted by the project.

B. Prior to the start of work, Temporary High Visibility Fencing (THVF) and/or flagging would be installed around sensitive natural communities, environmentally sensitive habitat areas, rare plant occurrences, intermittent streams, and wetlands and other waters, where appropriate. No work would occur within fenced/flagged areas.

C. Where feasible, the structural root zone would be identified around each large-diameter tree (>2-foot diameter at breast height [DBH]) directly adjacent to project activities, and work within the zone would be limited.

D. When possible, excavation of roots of large diameter trees (>2-foot DBH) would not be conducted with mechanical excavator or other ripping tools. Instead, roots would be severed using a combination of root-friendly excavation and severance methods (e.g., sharp-bladed pruning instruments or chainsaw). At a minimum, jagged roots would be pruned away to make sharp, clean cuts.

E. After completion, all superfluous construction materials would be completely removed from the site. The site would then be restored by regrading and stabilizing with a hydroseed mixture of native species along with fast growing sterile erosion control seed, as required by the Erosion Control Plan.

BR-5: Wetlands and Other Waters

A. The contractor would be required to prepare and submit a Temporary Creek Diversion System Plan to Caltrans for approval prior to any creek diversion. Depending on site conditions, the plan may also require specifications for the relocation of sensitive aquatic species (see also Aquatic Species Relocation Plan in **BR-2).** Water generated from the diversion operations would be pumped and discharged according to the approved plan and applicable permits.

B. In-stream work would be restricted to the period between June 15 and October 15 to protect water quality and vulnerable life stages of sensitive fish species (see also **BR-2L**). Construction activities restricted to this period include any work below the ordinary high water. Construction activities performed above the ordinary high water mark of a watercourse that could potentially directly impact surface waters (i.e., soil disturbance that could lead to turbidity) would be performed during the dry season, typically between June through October, or as weather permits per the authorized contractor-prepared Storm Water Pollution Prevention Plan (SWPPP), Water Pollution Control Program (WPCP), and/or project permit requirements.

C. See **BR-4** for Temporary High Visibility Fencing (THVF) information.

D. If allowed by regulatory agencies, temporary wetland protection mats may be used to prevent permanent damage and minimize temporary damage to wetlands from construction activities. Mats should be designed to accommodate motorized equipment or vehicles. Mats shall be removed when wetland access is no longer needed or by November 1 of each year.

Cultural Resources

CR-1: If cultural materials are discovered during construction, work activity within a 60-foot radius of the discovery would be stopped and the area secured until a qualified archaeologist can assess the nature and significance of the find in consultation with the State Historic Preservation Officer (SHPO).

CR-2: If human remains and related items are discovered on private or State land, they would be treated in accordance with State Health and Safety Code § 7050.5. Further disturbances and activities would cease in any area or nearby area suspected to overlie remains, and the County Coroner contacted. Pursuant to California Public Resources Code (PRC) § 5097.98, if the remains are thought to be Native American, the coroner would notify the Native American Heritage Commission (NAHC) who would then notify the Most Likely Descendent (MLD).

Human remains and related items discovered on federally-owned lands would be treated in accordance with the Native American Graves Protection and Repatriation Act of 1990 (NAGPRA) (23 USC 3001). The procedures for dealing with the discovery of human remains, funerary objects, or sacred objects on federal land are described in the regulations that implement NAGPRA 43 Code of Federal Regulation (CFR) Part 10. All work in the vicinity of the discovery shall be halted and the administering agency's archaeologist would be notified immediately. Project activities in the vicinity of the discovery would not resume until the federal agency complies with the 43 CFR Part 10 regulations and provides notification to proceed.

Geology, Seismic/Topography, and Paleontology

GS-1: The project would be designed to minimize slope failure, settlement, and erosion using recommended construction techniques and Best Management Practices (BMPs). New earthen slopes would be vegetated to reduce erosion potential.

GS-2: In the unlikely event that paleontological resources (fossils) are encountered, all work within a 60-foot radius of the discovery would stop, the area would be secured, and the work would not resume until appropriate measures are taken.

Greenhouse Gas Emissions

GHG-1: Caltrans Standard Specification "Air Quality" requires compliance by the contractor with all applicable laws and regulations related to air quality.

GHG-2: Compliance with Title 13 of the California Code of Regulations, which includes restricting idling of diesel-fueled commercial motor vehicles and equipment with gross weight ratings of greater than 10,000 pounds to no more than 5 minutes.

GHG-3: Caltrans Standard Specification "Emissions Reduction" ensures that construction activities adhere to the most recent emissions reduction regulations mandated by the California Air Resource Board (CARB).

GHG-4: Use of a Transportation Management Plan (TMP) to minimize vehicle delays and idling emissions. As part of this, construction traffic would be scheduled and routed to reduce congestion and related air quality impacts caused by idling vehicles along the highway during peak travel times.

GHG-5: All areas temporarily disturbed during construction would be revegetated with appropriate native species. Landscaping reduces surface warming and, through photosynthesis, decreases carbon dioxide (CO_2). This replanting would help offset any potential CO_2 emissions increase.

GHG-6: Pedestrian and bicycle access would be maintained on U.S. Highway 101 and State Route 254 during project activities.

Hazardous Waste and Material

HW-1: Per Caltrans requirements, the contractor(s) would prepare a project-specific Lead Compliance Plan (California Code of Regulations [CCR] Title 8, § 1532.1, the "Lead in Construction" standard) to reduce worker exposure to lead-impacted soil. The plan would include protocols for environmental and personnel monitoring, requirements for personal protective equipment, and other health and safety protocols and procedures for the handling of lead-impacted soil.

HW-2: If treated wood waste (such as removal of sign posts or guardrail) is generated during this project, it would be disposed of in accordance with Standard Specification "Treated Wood Waste."

Traffic and Transportation

TT-1: Pedestrian and bicycle access would be maintained during construction.

TT-2: The contractor would be required to schedule and conduct work to avoid unnecessary inconvenience to the public and to maintain access to driveways, houses, and buildings within the work zones.

TT-3: A Transportation Management Plan (TMP) would be applied to the project.

Utilities and Emergency Services

UE-1: All emergency response agencies in the project area would be notified of the project construction schedule and would have access to U.S. Highway 101 and State Route 254 throughout the construction period.

UE-2: Caltrans would coordinate with utility providers to plan for relocation of any utilities to ensure utility customers would be notified of potential service disruptions before relocation.

UE-3: The project is located within CAL FIRE *Moderate, High,* and *Very High* Fire Hazard Severity Zones. The contractor would be required to submit a jobsite Fire Prevention Plan as required by Cal/OSHA before starting job site activities. In the event of an emergency or wildfire, the contractor would cooperate with fire prevention authorities.

Water Quality and Stormwater Runoff

WQ-1: The project would comply with the Provisions of the Caltrans Statewide National Pollutant Discharge Elimination System (NPDES) Permit (Order 2012-0011-DWQ), as amended by subsequent orders, which became effective July 1, 2013. If the project results in a land disturbance of one acre or more, coverage under the Construction General Permit (Order 2009-0009-DWQ) is also required.

Before any ground-disturbing activities, the contractor would prepare a Stormwater Pollution Prevention Plan (SWPPP) (per the Construction General Permit Order 2009-0009-DWQ) or Water Pollution Control Program (WPCP) (projects that result in a land disturbance of less than one acre) that includes erosion control measures and construction waste containment measures to protect Waters of the State during project construction.

The SWPPP or WPCP would identify the sources of pollutants that may affect the quality of stormwater; include construction site Best Management Practices (BMPs) to control sedimentation, erosion, and potential chemical pollutants; provide for construction materials management; include non-stormwater BMPs; and include routine inspections and a monitoring and reporting plan. All construction site BMPs would follow the latest edition of the *Caltrans Storm Water Quality Handbooks: Construction Site BMPs Manual* to control and reduce the impacts of construction-related activities, materials, and pollutants on the watershed.

The project SWPPP or WPCP would be continuously updated to adapt to changing site conditions during the construction phase.

Construction may require one or more of the following temporary construction site BMPs:

- Any spills or leaks from construction equipment (e.g., fuel, oil, hydraulic fluid, and grease) would be cleaned up in accordance with applicable local, state, and/or federal regulations.
- Accumulated stormwater, groundwater, or surface water from excavations or temporary containment facilities would be removed by dewatering.
- Water generated from the dewatering operations would be discharged on-site for dust control and/or to an infiltration basin or disposed off-site.
- Temporary sediment control and soil stabilization devices would be installed.
- Existing vegetated areas would be maintained to the maximum extent practicable.
- Clearing, grubbing, and excavation would be limited to specific locations, as delineated on the plans, to maximize the preservation of existing vegetation.
- Vegetation reestablishment or other stabilization measures would be implemented on disturbed soil areas, per the Erosion Control Plan.
- Soil-disturbing work would be limited during the rainy season.

WQ-2: The project would incorporate pollution prevention and design measures consistent with the *2016 Caltrans Storm Water Management Plan* (Caltrans 2016). This plan complies with the requirements of the Caltrans Statewide NPDES Permit (Order 2012-0011-DWQ) as amended by subsequent orders.

The project design may include one or more of the following:

- Vegetated surfaces would feature native plants, and revegetation would use the seed mixture, mulch, tackifier, and fertilizer recommended in the Erosion Control Plan prepared for the project.
- Where possible, stormwater would be directed in such a way as to sheet flow across vegetated slopes, thus providing filtration of any potential pollutants.

1.5 Discussion of the NEPA Categorical Exclusion

This document contains information regarding compliance with the California Environmental Quality Act (CEQA) and other state laws and regulations. Separate environmental documentation supporting a Categorical Exclusion determination will be prepared in accordance with the National Environmental Policy Act (NEPA). When needed for clarity, or as required by CEQA, this document may contain references to federal laws and/or regulations (CEQA, for example, requires consideration of adverse effects on species identified as a candidate, sensitive, or special-status species by the National Marine Fisheries Service and the United States Fish and Wildlife Service—in other words, species protected by the Federal Endangered Species Act).

Chapter 2. CEQA Environmental Checklist

Environmental Factors Potentially Affected

The environmental factors indicated below would be potentially affected by this project. Please see the CEQA Environmental Checklist on the following pages for additional information.

Potential Impact Area	Impacted: Yes / No
Aesthetics	NO
Agriculture and Forest Resources	NO
Air Quality	NO
Biological Resources	**YES**
Cultural Resources	NO
Energy	NO
Geology and Soils	NO
Greenhouse Gas Emissions	**YES**
Hazards and Hazardous Materials	NO
Hydrology and Water Quality	**YES**
Land Use and Planning	NO
Mineral Resources	NO
Noise	NO
Population and Housing	NO
Public Services	NO
Recreation	NO
Transportation	NO
Tribal Cultural Resources	NO
Utilities and Service Systems	NO
Wildfire	NO
Mandatory Findings of Significance	NO

The CEQA Environmental Checklist identifies physical, biological, social, and economic factors that might be affected by the proposed project. In many cases, background studies performed in connection with the project will indicate there are no impacts to a particular resource. A "NO IMPACT" answer in the last column of the checklist reflects this determination.

The words "significant" and "significance" used throughout the CEQA Environmental Checklist are only related to potential impacts pursuant to CEQA. The questions in the CEQA Environmental Checklist are intended to encourage the thoughtful assessment of impacts and do not represent thresholds of significance.

Project features, which can include both design elements of the project, as well as standardized measures applied to all or most Caltrans projects (such as Best Management Practices [BMPs] and measures included in the Standard Plans and Specifications or as Standard Special Provisions [Section 1.4]), are considered to be an integral part of the project and have been considered prior to any significance determinations documented in the checklist or document.

Project Impact Analysis Under CEQA

CEQA broadly defines "project" to include "the whole of an action, which has a potential for resulting in either a direct physical change in the environment, or a reasonably foreseeable indirect physical change in the environment" (14 CCR § 15378). Under CEQA, normally the baseline for environmental impact analysis consists of the existing conditions at the time the environmental studies began. However, it is important to choose the baseline that most meaningfully informs decision-makers and the public of the project's possible impacts. Where existing conditions change or fluctuate over time, and where necessary to provide the most accurate picture practically possible of the project's impacts, a lead agency may define existing conditions by referencing historic conditions, or conditions expected when the project becomes operational, or both, that are supported with substantial evidence. In addition, a lead agency may also use baselines consisting of both existing conditions and projected future conditions that are supported by reliable projections based on substantial evidence in the record. The CEQA Guidelines require a "statement of the objectives sought by the proposed project" (14 CCR § 15124(b)).

CEQA requires the identification of each potentially "significant effect on the environment" resulting from the project, and ways to mitigate each significant effect. Significance is defined as *"Substantial or potentially substantial adverse change to any of the physical conditions within the area affected by the project"* (14 CCR § 15382). CEQA determinations are made prior to and separate from the development of mitigation measures for the project.

The legal standard for determining the significance of impacts is whether a "fair argument" can be made that a "substantial adverse change in physical conditions" would occur. The fair argument must be backed by substantial evidence including facts, reasonable assumption predicated upon fact, or expert opinion supported by facts. Generally, an environmental professional with specific training in an area of environmental review can make this determination.

Though not required, CEQA suggests Lead Agencies adopt thresholds of significance, which define the level of effect above which the Lead Agency will consider impacts to be significant, and below which it will consider impacts to be less than significant. Given the size of California and it's varied, diverse, and complex ecosystems, as a Lead Agency that encompasses the entire State, developing thresholds of significance on a state-wide basis has not been pursued by Caltrans. Rather, to ensure each resource is evaluated objectively, Caltrans analyzes potential resource impacts in the project area based on their location and the effect of the potential impact on the resource as a whole. For example, if a project has the potential to impact 0.10 acre of wetland in a watershed that has minimal development and contains thousands of acres of wetland, then a "less than significant" determination would be considered appropriate. In comparison, if 0.10 acre of wetland would be impacted that is located within a park in a city that only has 1.00 acre of total wetland, then the 0.10 acre of wetland impact could be considered "significant."

If the action may have a potentially significant effect on any environmental resource (even with mitigation measures implemented), then an Environmental Impact Report (EIR) must be prepared. Under CEQA, the lead agency may adopt a negative declaration (ND) if there is no substantial evidence that the project may have a potentially significant effect on the environment (14 CCR § 15070(a)). A proposed negative declaration must be circulated for public review, along with a document known as an Initial Study. CEQA allows for a "Mitigated Negative Declaration" in which mitigation measures are proposed to reduce potentially significant effects to less than significant (14 CCR § 15369.5).

Although the formulation of mitigation measures shall not be deferred until some future time, the specific details of a mitigation measure may be developed after project approval when it is impractical or infeasible to include those details during the project's environmental review. The lead agency must (1) commit itself to the mitigation, (2) adopt specific performance standards the mitigation will achieve, and (3) identify the type(s) of potential action(s) that can feasibly achieve that performance standard and that will be considered, analyzed, and potentially incorporated in the mitigation measure.

Compliance with a regulatory permit or other similar processes may be identified as mitigation if compliance would result in implementation of measures that would be reasonably expected, based on substantial evidence in the record, to reduce the significant impact to the specified performance standards (§ 15126.4(a)(1)(B)).

Per CEQA, measures may also be adopted, but are not required, for environmental impacts that are not found to be significant (14 CCR § 15126.4(a)(3)). Under CEQA, mitigation is defined as avoiding, minimizing, rectifying, reducing, and compensating for any potential impacts (CEQA 15370). Regulatory agencies may require additional measures beyond those required for compliance with CEQA. Though not considered "mitigation" under CEQA, these measures are often referred to in an Initial Study as "mitigation", Good Stewardship or Best Management Practices. These measures can also be identified after the Initial Study/Mitigated Negative Declaration is approved.

CEQA documents must consider direct and indirect environmental impacts of a project (California Public Resources Code § 21065.3). They are to focus on significant impacts (14 CCR § 15126.2(a)). Impacts that are less than significant need only be briefly described (14 CCR § 15128). All potentially significant effects must be addressed.

No-Build Alternative

For each of the following CEQA Environmental Checklist questions, the "No-Build" Alternative has been determined to have **"No Impact"**. Under the "No-Build" Alternative, no alterations to the existing conditions would occur and no proposed improvements would be implemented. The "No-Build" Alternative will not be discussed further in this document.

Definitions of Project Parameters

When determining the parameters of a project for potential impacts, the following definitions are provided:

Project Area: This is the general area where the project is located. This term is mainly used in the Environmental Setting section (e.g., watershed, climate type, etc.).

Project Limits: This is the beginning and ending post miles for a project. This is different than the Environmental Study Limits in that it sets the beginning and ending limits of a project along the highway. It is the limits programmed for a project, and every report, memo, etc. associated with a project should use the same post mile limits. In some cases, there may be areas associated with a project that are outside of the project limits, such as staging and disposal locations.

Project Footprint: The area within the Environmental Study Limits the project is anticipated to impact, both temporarily and permanently. This includes staging and disposal areas.

Environmental Study Limits (ESL): The project engineer provides the Environmental team the ESL as an anticipated boundary for potential impacts. The ESL is *not* the project footprint. Rather, it is the area encompassing the project footprint where there could *potentially* be direct and indirect disturbance by construction activity. The ESL is larger than the project footprint in order to accommodate any future scope changes. The ESL is also used for identifying the various Biological Study Areas needed for different biological resources.

Biological Study Area (BSA): The BSA encompasses the ESL plus any areas outside of the ESL that could potentially be affected by a project (e.g., noise, visual, Coastal Zone, etc.). Depending on resources in the area, a project could have multiple BSAs. Each BSA should be identified and defined. If the project is within the Coastal Zone, this area would also include the required 100-foot buffer.

2.1 Aesthetics

Except as provided in the Public Resources Code Section 21099:	Significant and Unavoidable Impact	Less Than Significant with Mitigation Incorporated	Less Than Significant Impact	No Impact
Would the project: a) Have a substantial adverse effect on a scenic vista?				✓
Would the project: b) Substantially damage scenic resources, including, but not limited to, trees, rock outcroppings, and historic buildings within a state scenic highway?				✓
Would the project: c) In non-urbanized areas, substantially degrade the existing visual character or quality of public views of the site and its surroundings? (Public views are those that are experienced from a publicly accessible vantage point). If the project is in an urbanized area, would the project conflict with applicable zoning and other regulations governing scenic quality?				✓
Would the project: d) Create a new source of substantial light or glare which would adversely affect day or nighttime views in the area?				✓

"No Impact" determinations in this section are based on the scope, description, and location of the proposed project, as well as the Visual Impact Assessment (VIA) dated February 14, 2022 (Caltrans 2022a). The project is located within a portion of US 101 that is eligible for designation as a Scenic Highway and is considered a sensitive corridor regarding visual resources. The visual character of the project would be compatible with the existing visual character of the project corridor, as the project involves replacement and rehabilitation of existing culvert systems. Potential impacts to visual resources are not anticipated as most work would occur below the line of site from the highway, be visually comparable to the existing facilities, and would have no adverse effects on the scenic vista.

While trees greater than 20 inches dbh would be removed at PMs 2.40, 34.77, 35.00, and R47.01, the trees are in densely forested areas and their removal would not detract from the scenic view. In other project locations where large coast redwoods occur, methods would be utilized as needed to protect structural root systems (refer to Standard Measures in Section 1.4).

Given the above, the project is anticipated to have ***"No Impact"*** on visual resources. No mitigation would be required.

2.2 Agriculture and Forest Resources

In determining whether impacts to agricultural resources are significant environmental effects, lead agencies may refer to the California Agricultural Land Evaluation and Site Assessment Model (1997) prepared by the California Department of Conservation as an optional model to use in assessing impacts on agriculture and farmland. In determining whether impacts to forest resources, including timberland, are significant environmental effects, lead agencies may refer to information compiled by the California Department of Forestry and Fire Protection (CAL FIRE) regarding the state's inventory of forest land, including the Forest and Range Assessment Project; the Forest Legacy Assessment Project; and the forest carbon measurement methodology provided in Forest Protocols adopted by the California Air Resources Board (CARB).

Question	Significant and Unavoidable Impact	Less Than Significant with Mitigation Incorporated	Less Than Significant Impact	No Impact
Would the project: a) Convert Prime Farmland, Unique Farmland, or Farmland of Statewide Importance (Farmland), as shown on the maps prepared pursuant to the Farmland Mapping and Monitoring Program of the California Resources Agency, to non-agricultural use?				✓
Would the project: b) Conflict with existing zoning for agricultural use, or a Williamson Act contract?				✓
Would the project: c) Conflict with existing zoning for, or cause rezoning of forest land (as defined by Public Resources Code Section 12220(g)), timberland (as defined by Public Resources Code Section 4526), or timberland zoned Timberland Production (as defined by Government Code Section 51104(g))?				✓
Would the project: d) Result in the loss of forest land or conversion of forest land to non-forest use?				✓

Question	Significant and Unavoidable Impact	Less Than Significant with Mitigation Incorporated	Less Than Significant Impact	No Impact
Would the project: e) Involve other changes in the existing environment which, due to their location or nature, could result in conversion of Farmland to non-agricultural use or conversion of forest land to non-forest use?				✓

"No Impact" determinations in this section are based on the scope, description, and location of the proposed project. The project area is predominantly bordered by property zoned as Timber Production Zone, Agriculture Exclusive, Agriculture General, or Unclassified that allows for general agriculture (County of Humboldt 2021). The drainage system at PM R16.09 is adjacent to property under Williamson Act contract; however, the drainage system is within the existing Caltrans right of way and would not conflict with the contract or result in the conversion of farmland to non-agricultural use. Potential impacts to agriculture and forest resources are not anticipated as the improvement of existing drainage facilities would not cause a change in zoning or land use or result in the loss or conversion of forest or agricultural land.

Given the above, Caltrans anticipates the project would have ***"No Impact"*** on agriculture and forest resources. No mitigation would be required.

2.3 Air Quality

Where available, the significance criteria established by the applicable air quality management or air pollution control district may be relied upon to make the following determinations.

Question	Significant and Unavoidable Impact	Less Than Significant with Mitigation Incorporated	Less Than Significant Impact	No Impact
Would the project: a) Conflict with or obstruct implementation of the applicable air quality plan?				✓
Would the project: b) Result in a cumulatively considerable net increase of any criteria pollutant for which the project region is non-attainment under an applicable federal or state ambient air quality standard?				✓
Would the project: c) Expose sensitive receptors to substantial pollutant concentrations?				✓
Would the project: d) Result in other emissions (such as those leading to odors) adversely affecting a substantial number of people?				✓

"No Impact" determinations in this section are based on the scope, description, and location of the proposed project, as well as the Environmental Impact Evaluation for Air Quality, Traffic Noise, and Greenhouse Gas dated February 11, 2022 (Caltrans 2022b). Humboldt County is classified as an "attainment" area for all current National Ambient Air Quality Standards. Therefore, transportation conformity requirements do not apply. There are no sensitive receptors in the immediate vicinity of the drainage systems. Potential long-term impacts to air quality are not anticipated because the project would not result in changes to traffic volumes, capacity, vehicle miles traveled (VMT), fleet mix, speed, location of existing facilities, or any other factor that would increase long-term operational emissions.

The project may result in temporary air quality impacts, including fugitive dust and exhaust from construction equipment. Fugitive dust, or PM_{10}, may be generated during excavation, grading, and hauling activities. However, both fugitive dust and pollutants from construction equipment would be temporary in nature. A discussion of greenhouse gas emissions is provided in Section 2.8. Dust and emissions would be reduced and controlled in conformance with Caltrans standard specifications.

Given the above, Caltrans anticipates the project would have ***"No Impact"*** on air quality. No mitigation would be required.

2.4 Biological Resources

Question	Significant and Unavoidable Impact	Less Than Significant with Mitigation Incorporated	Less Than Significant Impact	No Impact
Would the project: a) Have a substantial adverse effect, either directly or through habitat modifications, on any species identified as a candidate, sensitive, or special-status species in local or regional plans, policies, or regulations, or by the California Department of Fish and Wildlife, U.S. Fish and Wildlife Service, or NOAA Fisheries?			✓	
Would the project: b) Have a substantial adverse effect on any riparian habitat or other sensitive natural community identified in local or regional plans, policies, regulations or by the California Department of Fish and Wildlife or U.S. Fish and Wildlife Service?			✓	
Would the project: c) Have a substantial adverse effect on state or federally protected wetlands (including, but not limited to, marsh, vernal pool, coastal, etc.) through direct removal, filling, hydrological interruption, or other means?		✓		
Would the project: d) Interfere substantially with the movement of any native resident or migratory fish or wildlife species or with established native resident or migratory wildlife corridors, or impede the use of native wildlife nursery sites?				✓

Question	Significant and Unavoidable Impact	Less Than Significant with Mitigation Incorporated	Less Than Significant Impact	No Impact
Would the project: e) Conflict with any local policies or ordinances protecting biological resources, such as a tree preservation policy or ordinance?				✓
Would the project: f) Conflict with the provisions of an adopted Habitat Conservation Plan, Natural Community Conservation Plan, or other approved local, regional, or state habitat conservation plan?				✓

Regulatory Setting

Within this section of the document (2.4. Biological Resources), the topics are separated into Sensitive Natural Communities, Wetlands and Other Waters, Plant Species, Animal Species, Threatened and Endangered Species, and Invasive Species. Plant and animal species listed as "threatened" or "endangered" are covered within the Threatened and Endangered sections. Other special status plant and animal species, including CDFW fully protected species, species of special concern, USFWS and NMFS candidate species, and California Native Plant Society (CNPS) rare and endangered plants, are covered in the respective Plant and Animal sections.

Sensitive Natural Communities

CDFW maintains a list of Sensitive Natural Communities (SNCs). SNCs are those natural communities that are of limited distribution statewide or within a county or region and are often vulnerable to environmental effects of projects. These communities may or may not contain special status taxa or their habitat.

Wetlands and Other Waters

"Waters" of the United States (including wetlands) and State are protected under several laws and regulations. The primary laws and regulations governing wetlands and other waters include:

- Federal Clean Water Act (CWA)–33 USC 1344
- Federal Executive Order for the Protection of Wetlands–Executive Order [EO] 11990
- State California Fish and Game Code (CFGC)–Sections 1600–1607
- State Porter-Cologne Water Quality Control Act–Section 3000 et seq.

Plant Species

The U.S. Fish and Wildlife Service (USFWS) and California Department of Fish and Wildlife (CDFW) have regulatory responsibility for the protection of special status plant species. The primary laws governing plant species include:

- Federal Endangered Species Act (FESA)–United States Code 16 (USC) Section 1531 et seq. See also 50 Code of Federal Regulations (CFR) Part 402
- California Endangered Species Act (CESA)–California Fish and Game Code Section 2050 et seq.
- Native Plant Protection Act–California Fish and Game Code Sections 1900–1913
- National Environmental Policy Act (NEPA)–40 CFR Sections 1500 through 1508
- California Environmental Quality Act (CEQA)–California Public Resources Code Sections 21000–21177

Animal Species

The USFWS, NMFS, and CDFW have regulatory responsibility for the protection of special status animal species. The primary laws governing animal species include:

- NEPA–40 CFR Sections 1500 through 1508
- CEQA–California Public Resources Code Sections 21000–21177
- Migratory Bird Treaty Act–16 United States Code (USC) Sections 703–712
- Fish and Wildlife Coordination Act–16 USC Section 661

- California Fish and Game Code–Sections 1600–1603
- California Fish and Game Code–Sections 4150 and 4152

Threatened and Endangered Species

The primary laws governing threatened and endangered species include:

- FESA–United States Code 16 (USC) Section 1531 et seq. See also 50 CFR Part 402
- CESA–California Fish and Game Code Section 2050 et seq.
- CESA–California Fish and Game Code Section 2080
- CEQA–California Public Resources Code (PRC) Sections 21000–21177
- Magnuson-Stevens Fishery Conservation and Management Act, as amended–16 USC Section 1801

Invasive Species

The primary laws governing invasive species are Executive Order (EO) 13112 and NEPA.

Environmental Setting

A Natural Environment Study (NES) dated October 2022 (Caltrans 2022c) and an Addendum to the NES dated March 30, 2023 (Caltrans 2023a) were prepared for the project. References to primary literature sources are listed in the NES. To comply with the provisions of various state and federal environmental statutes and Executive Orders, potential impacts to regulated habitats and special status plants and animals were investigated. Caltrans coordinated with fisheries biologists and water quality specialists, as well as agency personnel from USFWS, NMFS, CDFW, and California State Parks.

The Environmental Study Limits (ESL), provided by the Caltrans Design team at the beginning of the environmental study process, is the area encompassing the project footprint where there could potentially be direct and indirect disturbance by construction activity. Within the ESL, direct project impacts are anticipated from project activities, noise and/or visual disturbance, equipment staging, and, where relevant, construction of access routes. Field reviews were conducted within the ESL to identify existing habitat types and natural communities, potential jurisdictional waters (including wetlands), rare species and/or factors indicating the potential for rare species (i.e., presence of suitable habitat), and sensitive water

quality receptors (e.g., amphibians, fish). See Appendix A for individual ESLs on project layouts.

The Biological Study Area (BSA) encompasses the ESL, as well as areas adjacent to the ESL, where standard environmental assessments for sensitive resources (habitats, plants, wildlife, wetlands, rivers/creeks, etc.) are conducted. The limits of the BSA were determined, in part, using the USFWS guidance *Estimating the Effects of Auditory and Visual Disturbance to Northern Spotted Owl and Marbled Murrelets in Northwestern California* (USFWS 2020) and incorporated an auditory disturbance buffer (i.e., "noise buffer") of 0.25 mile around the construction footprint where habitat suitability and potential effects of construction noise were evaluated for marbled murrelet, Northern spotted owl, and raptors.

The proposed project is located in Humboldt County in the Garberville, Miranda, Myers Flat, Weott, Redcrest, Scotia and Hydesville United States Geological Survey(USGS) Quadrangles. The project area comprises 56 individual ESLs totaling 42.41 acres near the Eel River and South Fork Eel River. The ESLs include the culvert systems to be replaced or repaired and the staging areas needed to conduct the work. The ESLs are along approximately 52 miles of US 101 in Humboldt County, from PM 2.40 to PM M53.85, stretching from Cooks Valley, approximately one mile north of the Mendocino County line, to Rio Dell. The topography of the ESLs varies from relatively level pullouts and developed/disturbed areas to steep banks of the South Fork Eel River. The ESLs are bounded by undeveloped forested lands; Benbow Lake State Recreation Area; Humboldt Redwoods State Park; John B. Dewitt Redwoods State National Reserve; Richardson Grove State Park; and some rural residential, commercial, and industrial development.

Natural Communities and Land Cover Types

A Botanical and Vegetation Resources Survey Report, including vegetation mapping, was prepared by Stantec Inc. in August 2022 (Caltrans 2022d). Natural Community types identified within the ESLs are typical of the Northern California Coast region and vary depending on location within the 52-mile study limits. A total of 34 vegetation and land cover types were mapped within the ESLs (Table 4). Predominant types were described as: developed (17.23 acres), Redwood Forest and Woodland (6.51 acres), wild oats and annual brome grasslands (6.29 acres), Harding grass–reed canary grass swards (2.69 acres), ruderal (2.40 acres), and fennel patches (1.61 acres). All other types were under one acre in size. Additional land cover types include aquatic resources, such as unvegetated open water and erosional features.

Developed areas are those containing a built environment and existing disturbance to the local plant community. Such areas within the BSA include residences, landscaped areas, paved areas, trails and roads. Ruderal habitat consists primarily of weedy, non-native, and often invasive species along roadsides or other disturbed places. A large proportion of the ESL is adjacent to US 101 and supports many non-native and invasive plant species rated as limited, moderate, or high by the California Invasive Species Council. The area adjacent to US 101 is largely mapped as non-native herbaceous or barren land types.

Sensitive Natural Communities

Sensitive Natural Communities (SNC) are habitats considered sensitive because of their high species diversity, high productivity, unusual nature, limited distribution, or declining status. SNC are globally (G) and state (S) ranked by CDFW from 1 to 3, where 1 is critically imperiled, 2 imperiled, and 3 vulnerable. Ranks S1–S3 must be addressed in the CEQA environmental review process (CDFW 2022a). Ranks 4 (apparently secure) and 5 (secure) are not considered to be sensitive. Of the community types identified within the ESL, nine are considered SNC by CDFW (Table 4). There are no habitat types within the ESL that are considered to be imperiled or critically imperiled. Riparian habitat is associated with many of these communities and was observed at six of the drainage system locations.

Table 4. Natural Communities/Land Cover Mapped in the ESL

Natural Communities/Land Cover Type	SNC Rank	Acres
Developed	-	17.23
Redwood forest and woodland	S3 G3	6.51
Wild oats & annual brome grasslands	-	6.29
Harding grass - reed canary grass swards	-	2.69
Ruderal	-	2.40
Fennel patches	-	1.61
Coyote brush scrub	-	0.77
Himalayan scrub	-	0.68
Toyon - ceanothus scrubland	-	0.65
Broom patches	-	0.50
Tanoak forest	S3 G4	0.46
California bay forest and woodland	S3 G4	0.44
Douglas fir forest and woodland	-	0.40
Arroyo willow thickets	-	0.39
Red alder forest	-	0.21
Poison oak scrub	-	0.14
Common velvet grass - sweet vernal grass meadows	-	0.13
Madrone forest	S3 G4	0.13
Blue blossom chaparral	-	0.12
Kentucky bluegrass - redtop - creeping bentgrass meadows	-	0.12
Oregon white oak woodland and forest	S3 G4	0.11
Sitka willow thickets	S3 G4	0.11
Upland mustards or star-thistle fields	-	0.08
Arbutus menziesii (madrone*) - Umbellularia californica* (California bay) Association	-	0.07
Blue wildrye prairie	S3 G4	0.06
Field horsetail – scouringrush horsetail - variegated scouring rush wet meadow	S3 G4	0.05
Soft rush marshes	-	0.03
Annual dogtail grassland	-	0.02
Slough sedge bulrush marsh	S3 G4	0.01
TOTAL		**42.41**

S = state, G = global, 3 = vulnerable, 4 = apparently secure

Wetlands and Other Waters

Wetland delineations were performed to survey for potentially jurisdictional wetland and non-wetland Waters of the U.S. and State within and adjacent to the project construction footprint at each location. An Aquatic Resources Delineation Report was prepared by Stantec Consulting Services, Inc. in June 2022 (Caltrans 2022e) in accordance with *U.S. Army Corps of Engineers Wetlands Delineation Manual* (Environmental Laboratory 1987). The USACE methodology relies on a three-parameter approach in which criteria for hydrophytic vegetation, hydric soils, and wetland hydrology must each be met to conclude an area qualifies as a wetland.

Potentially jurisdictional aquatic resources delineated in the ESL include wetlands and other waters as described in Table 5. A total of 0.413 acre (1,792 linear feet) of aquatic resources were delineated, including 0.291 acre of wetlands and 0.122 acre of other waters.

Table 5. Summary of Potential Jurisdictional Waters of the U.S. within the ESL

Feature Type and Name	USACE and RWQCB Jurisdiction (acres)	USACE and RWQCB Jurisdiction (linear feet)	CDFW Jurisdiction (linear feet)
Wetlands			
Palustrine Emergent	0.225	N/A	N/A
Palustrine Scrub-Shrub	0.019	N/A	N/A
Palustrine Unconsolidated Bottom	0.047	N/A	N/A
Total	**0.291**	**N/A**	**N/A**
Other Waters			
Ephemeral Stream	0.052	1,096	1,096
Intermittent Stream	0.044	490	490
Upper Perennial Rock Bottom Stream	0.015	108	108
Upper Perennial Unconsolidated Bottom Stream	0.011	98	98
Total	**0.122**	**1,792**	**1,792**
TOTAL	**0.413**	**1,792**	**1,792**

Habitat Connectivity

Wildlife corridors are areas of habitat used by wildlife for seasonal or daily migration. Stream courses and their associated riparian areas are often used as migration corridors by aquatic and terrestrial species. If corridors are degraded, habitat fragmentation can result. Habitat fragmentation is the process by which habitat loss results in the division of large, continuous habitats into smaller, more isolated remnants, thereby lessening its biological value.

The CDFW Areas of Conservation Emphasis (ACE) is a tool that utilizes a compilation of statewide spatial information on items such as biodiversity, rarity, significant habitats, and connectivity to produce a ranking of an area's connectivity importance. All five ACE rankings – 1, 2, 3, 4, and 5 – are represented within the ±52-miles of BSA (CDFW 2022b). Rank 5 is the highest priority ranking, an "Irreplaceable and Essential Corridor," that includes areas where surrounding land use and barriers are expected to funnel, or concentrate, animal movement. These channelized areas may represent the last available connection(s) between two areas, making them high priority for conservation (CDFW 2019).

Multiple locations within the project limits are also within the California Essential Habitat Connectivity (CEHC) Potential Riparian Connection planning layer.

Special Status Plant Species

Botanical surveys were conducted May 17-20 and 26, June 17 and 22, July 7-8, 20, and 22, and August 4, 2021. Additional surveys were conducted on March 24-25, April 13-15, and June 21-23, 2022.

Plants are considered to be of special concern based on (1) federal, state, or local laws regulating their development; (2) limited distributions; and/or (3) the habitat requirements of special status plants or animals occurring on-site.

Botanical surveys detected one special status plant species within the ESL—leafy-stemmed mitrewort (*Mitellastra caulescens*). Potentially suitable habitat exists within the BSA for one federally listed species, the western lily (*Lilium occidentale*), however, the species was not observed within the ESL. These species are discussed below.

There was no suitable habitat and no presence observed within the ESL for the following federally listed plant species:

- Beach layia (*Layia carnosa*)
- Burke's goldfields (*Lasthenia burkei*)
- Contra Costa goldfields (*Lasthenia conjugens*)
- Kneeland Prairie pennycress (*Noccaea fendleri* ssp. *Californica*)
- McDonald's rockcress (*Arabis mcdonaldiana*)
- Showy Indian clover/two-forked clover (*Trifolium amoenum*)

As there would be no impact to these species, they are not discussed further in this section.

Leafy-stemmed mitrewort

Leafy-stemmed mitrewort (*Mitellastra caulescens*) is a perennial herb native to California and elsewhere in North America. It primarily occupies mesic, shaded areas and blooms May through July. It grows in wet, shaded areas below approximately 4,800 feet in elevation, often along streams, meadows, seeps, or roadsides. Between April and October, the plants grow inflorescences with numerous small saucer-shaped flowers with yellow-green petals and brown spots. The range of this species extends from northern California, north to British Columbia, and east to Montana. The primary threats to this species are road maintenance activities and logging.

Leafy-stemmed mitrewort was observed at PM R47.01. This species has no federal or state status, however, has a California Rare Plant Rank (CRPR) of 4.2, which means it has limited distribution and is fairly threatened in California.

Western Lily

Western lily *(Lilium occidentale*) is federally and state listed as endangered. It is a perennial herb that grows from a bulb and produces crimson red flowers with yellow centers between June and July. It occurs in coastal areas between Coos Bay, Oregon, and Eureka, California, where it is associated with freshwater marshes, swamps, bogs, and fens in coastal scrub, coastal bluff scrub, coastal prairie, or North Coast coniferous forest habitats. It is typically found on well-drained, old beach washes overlain with wind-blown alluvium and organic topsoil, usually near margins of Sitka spruce (*Picea sitchensis*) at elevations ranging from 6 to 607 feet (2–185 meters). Threats to the species are primarily from development,

hydrological modification from land use changes, and encroachment by trees and shrubs due to a lack of ecological disturbance, such as fire and grazing.

Western lily was not detected during floristic surveys conducted within the ESL. The closest California Natural Diversity Database (CNDDB) record of western lily occurs at Table Bluff, approximately 12 miles northwest of the ESL. An extant population is recorded in Fields Landing approximately 15 miles northwest of Scotia at PM M53.85. The project site does not provide suitable habitat for Western lily and the species was not observed within the ESL.

Special Status Animal Species

Special status species that could potentially occur within the BSA, based on queries and the presence of potential habitat within the BSA, are discussed below. Special status species occurrences within the region are identified in the USFWS and NMFS species lists and CNDDB query in Appendix C. Species listed or proposed for listing as federal/state threatened or federal/state endangered by regulatory agencies are discussed in the subsequent section (Threatened and Endangered Species). Special status species with no potential to occur in the project area are not discussed further in this document.

Amphibians and Reptiles

No special status amphibians or reptiles were observed during any field studies. Focused surveys were not conducted. There are numerous CNDDB occurrences of special status amphibians and reptiles within two miles of the project area. Wetlands and other waters within the ESL at multiple locations provide suitable habitat for special status amphibians and reptiles which may be present during construction activities.

Foothill Yellow-legged Frog

The North Coast clade of Foothill yellow-legged frog (*Rana boylii*) (FYLF) is a state Species of Special Concern. While populations within California are listed as Threatened or Endangered, populations on California's northern coast, which includes the BSA, were determined to not warrant listing. This species is associated with partly shaded, shallow streams and riffles with rocky substrate in a variety of habitats. During cold weather, individuals seek cover under rocks in the streams or on shore within 6 feet of water. This species is rarely encountered far from permanent water.

Eggs are attached to gravel or rocks in moving water near stream margins. Mating and egg-laying occurs exclusively in streams and rivers. There are multiple CNDDB occurrences with the BSA at multiple project locations.

Northern Red-legged Frog

The Northern red-legged frog (*Rana aurora*) is a state Species of Special Concern. It is a medium- to large-sized frog that is found in humid forests, woodlands, grasslands, and streamsides with dense riparian cover along the Coast Ranges from Del Norte County to Mendocino County. It is most common in lowlands or foothills and is frequently found in woods adjacent to streams, although can be wide-ranging and highly terrestrial in damp woods and meadows during the non-breeding season. It requires permanent water sources, such as ponds and lakes for breeding. The nearest CNDDB occurrence was recorded in 2002 within the BSA at PM R47.01.

Pacific Tailed Frog

Pacific tailed frog (*Ascaphus truei*) is a state Species of Special Concern. It occurs in mature or late-successional conifer-dominated habitats, including coast redwood and Douglas-fir forests along the Northern California coast. It can be found in cool, perennial streams with steep banks and dense vegetation. Tailed frogs are usually found in streams with large stones, cobbles, and stable boulders, which can be used for shelter from rapid currents. Quieter side pools are also needed so eggs are not washed away. The nearest CNDDB occurrence was recorded in 2013 within the BSA at PM 37.64.

Red-bellied Newt

The red-bellied newt (*Taricha rivularis*) is a state Species of Special Concern. It is a stream-breeding newt that occurs in coastal California north of San Francisco Bay within Sonoma, Lake, Mendocino, and Humboldt counties. Adult red-bellied newts utilize terrestrial sites for underground retreats, migration, and foraging habitat during the dry season, generally from May to October. A multitude of forest types are used by the species, from Douglas-fir/tanoak–dominated forests to redwood forests. Following rainfall events, the species will begin migrating to streams as early as the beginning of January. However, amidst heavy rainfall events and/or flooding, migration to streams is often inhibited. Most of the breeding season occurs from March to April, with egg masses being deposited underneath stones or rootlets in fast-flowing water. The nearest CNDDB occurrence is 9.5 miles west of PM R13.39.

Southern Torrent Salamander

Southern torrent salamander (*Rhyacotriton variegatus*) is a state Species of Special Concern. It occurs in forested areas along the coast in cold and well-shaded, rocky or gravelly perennial streams and seeps in Humboldt, Mendocino, Siskiyou and Trinity counties. It requires gravel or rock substrate for egg laying, avoids open deep water, and does not travel more than 6 feet from aquatic habitats. The nearest CNDDB occurrences were observed in 2013 approximately 0.15 mile from PM R43.54 and 0.25 mile from PM 37.64.

Western Pond Turtle

Western pond turtle (*Emys marmorata*) is a state Species of Special Concern. It is found throughout most of California and prefers creeks and ponds with quiet water, as well as streams with boulders or fallen trees that provide cover. The species is often associated with areas that provide basking habitat, such as aquatic vegetation and/or logs. There are two CNDDB occurrences for western pond turtle reported within 0.7 miles of PM 2.40.

Birds

American Peregrine Falcon

American peregrine falcon (*Falco peregrinus*) is a CDFW fully protected species. The peregrine falcon feeds mainly on birds (doves, shorebirds, pigeons, ducks), as well as some mammals, such as bats, rabbits, and rodents, and occasionally insects, reptiles, and fish. Peregrine falcons are usually found alone or in breeding pairs, with each pair maintaining a breeding territory and often remaining together throughout the year. Nesting in northern California may begin in March, with young leaving the nest by early July. Although peregrine falcons often nest on cliff faces, they also select a wide variety of other structures for nest sites, including buildings, bridges, electrical transmission structures, and occasionally the abandoned nests of large raptors or ravens.

No species-specific surveys were performed for this species. There are four CNDDB occurrences within 3 miles of multiple ESLs. The closest occurrence is located on the Scotia Bluffs over the Eel River, 0.5 mile east of PM M53.85.

Migratory Birds

No point count surveys were conducted to specifically observe and record migratory birds; however, their presence is assumed.

Fish

Pacific Lamprey and Western Brook Lamprey

Two California SSC lamprey species are known to inhabit the Eel River—the Pacific lamprey (*Entosphenus tridentatus*) and western brook lamprey (*Lampetra richardsonii*). Pacific lampreys are parasitic, anadromous fish for which the Eel River was named due to its resemblance to the American eel (*Anguilla rostrata*). Pacific lampreys enter rivers in winter and spring. When females become gravid, both male and female spawners dig gravel nests to spawn. Upon emergence from the gravels, Pacific lamprey ammocoetes (the larval stage) passively drift downstream to low velocity, backwater silty habitats where they burrow and live as filter feeders for up to seven years.

Metamorphosis to macrophthalmia (juvenile phase) occurs gradually over several months from July to November. During this transformation they develop eyes and teeth. Macrophthalmia begin their downstream migration in late summer-early fall when rains increase stream flows that passively carry fish to mainstem rivers and eventually the ocean. As adults in the ocean, Pacific lamprey are parasitic and feed on marine fishes by attaching to prey with their specialized mouth. After spending one to three years in the marine environment, they stop feeding and migrate back to fresh water between February and June. They overwinter in fresh water until they spawn the following year between March and July. Lampreys die within days after spawning.

Western brook lampreys are not anadromous nor parasitic; they stay in streams for their entire lives as filter feeders. Ammocoetes are typically found in slack water areas or pools where they burrow tail first into soft substrate. Burrowed ammocoetes feed on algae and organic matter passing in the water column. In an optimal habitat of sand and silt, the ammocoetes might have a distribution as dense as 170 larval lampreys per square meter. The larval stage lasts 2-4 years in California. Ammocoetes undergo metamorphosis in the fall and the resulting adults are ready to spawn by the following spring. Spawning takes place in riffles in the early spring and may last up to six months depending upon the flow regime of the stream. Adult spawners dig nests 6–8 inches (15–20 cm) long in a gravel substrate where

one female may be surrounded by several males. The female releases 1,100-3,700 eggs, which are quickly fertilized, and then the nest is covered before hatching in about 10 days.

Both species also require areas with pebbles or sand for spawning. Ammocoetes require streams with deep pockets of sediment and flowing water because they bury themselves in sediment during the day and extend their bodies into the water column during the night to feed. They feed by filtering organic material from the water.

No species-specific surveys were performed for these species. The nearest CNDDB record for both lamprey species is approximately 11 miles north of the BSA at PM M53.85, however these species are known to be present in the Eel River and may be present in the Eel River within the BSA. It is unlikely that lamprey would be present within the ESL during construction and dewatering.

Mammals

Bat Species–Pallid Bat, Townsend's Big-eared Bat, Western Red Bat

In the mild northern California coastal climate, bats are present year-round. In colder areas they are often migratory. In California, fourteen species of bats are either considered Species of Special Concern by CDFW or currently proposed for such status. Additionally, the Forest Service and Bureau of Land Management list some species as sensitive and the Western Bat Working Group lists some as high priority for consideration of conservation measures. Under CEQA, state agencies, local governments, and special districts are required to evaluate and disclose impacts from projects in the state. California Fish and Game Code Section 4150 provides further protection to bats (non-game mammals) from take or possession. Disturbances by humans, especially in hibernacula and maternity roosts, are a serious threat to most of the species.

All 25 bat species that occur in California use one or more natural features or anthropogenic structures for roosting and 15 species are known to use bridges. Of these 15 bat species, four species commonly use bridges, eight species occasionally use bridges, and three species rarely use bridges. Bats also forage in habitats near bridges, such as riparian communities and open water, and along transportation corridors (e.g., roadside tree canopies).

Bridges are the transportation structures most associated with bat species. Bats use bridge cavities for roosting during the day and for bearing and rearing young (i.e., maternal roost) typically from February through August. They may also use bridges in winter as hibernacula. At night, bats often roost in the open on the concrete undersides of bridges. Night roosts, which are used from approximately sunset to sunrise, are sites where animals congregate to rest and digest their food between foraging bouts. Night roosts also serve as important stopping points during migration and appear to have a social function.

In addition to bats roosting inside or on bridge structures, bats can roost in culverts, on rocky banks, or in nearby trees, such as those in adjacent riparian habitat. Buildings and other structures that are adjacent to a transportation project may also provide potential habitat for crevice or cavern roosting species.

The forested woodlands and Eel River adjacent to the project area offer foraging and roosting habitat for bats. The roadway offers an opening in the forest for edge-foraging bats. Both day and night roosting habitat could occur within crevices and cavities of trees and snags within the BSA. Three species of bat considered to be SSC by CDFW were documented within the nine-quad database search: pallid bat (*Antrozous pallidus*), Townsend's big-eared bat (*Corynorhinus townsendii*), and western red bat (*Lasiurus blossevillii*).

The CNDDB RareFind database shows a detection of Townsend's big-eared bats approximately 0.1 mile northeast of PM 43.37. The nearest detection of pallid bat is within one mile of the ESL at PM 2.40. Western red bats have been observed in Bull Creek watershed, approximately 2.2 miles from PMs 34.77 and 35.00. These SSC, and the other bat species discussed above, could potentially occur within the project limits.

Biologists inspected trees within the ESL for signs of roosting activity. Trees were inspected for cavities, guano accumulations, staining, and observable crevices. No signs of bat colonies were detected within the ESL. No trees marked for removal had signs of bat roosting activity or observable roosting cavities or crevices. No acoustic detection surveys were performed.

Pacific Fisher

The Pacific fisher (*Pekania pennanti*)–West Coast Distinct Population Segment (DPS) is a state Species of Special Concern. Some California populations are regulated as state threatened. The Pacific fisher Southern Sierra Evolutionarily Significant Unit (ESU) (defined as California south of the Merced River) warranted listing as threatened, while the Northern California ESU does not currently warrant listing. The project would occur within the range of the SSC-Northern California ESU of Pacific fisher.

The fisher is one of the larger members of the weasel family (Mustelidae) and are opportunistic, generalist predators with a diverse diet including mammalian and avian prey, ungulate carrion, vegetation, insects, and fungi. Fisher are known to occur in coniferous forests in the coastal ranges of northern California, including second-growth and old-growth redwood forest, with a possible preference for stands with structural complexity, diversity, and large logs and snags for resting and denning. The fisher requires intermediate to large-tree stages of coniferous forests and deciduous riparian areas with high percent canopy closure. They require large areas of mature, structurally complex conifer and mixed conifer hardwood forest and occupy home ranges that can exceed 14,826 acres. Fishers are generally solitary animals, except during the breeding season. They mate between February and May (usually late March), giving birth the following March.

The CNDDB RareFind database shows the nearest fisher detections approximately one mile and three miles northeast of the ESL at PM 23.46. Protocol-level surveys were not conducted for this species.

Trees suitable for fisher den sites include conifers ≥ 22" dbh and hardwoods ≥ 18" dbh. Day resting sites may include branches, platforms, and cavities of live trees. Suitably sized trees with the following characteristics are considered as potential fisher den sites:

- Any broken-topped tree with a minimum diameter at the break of 18" or larger.
- Trees with one or more limbs 12" or greater in diameter.
- Trees with a cavity (or void within a tree bole or large limb) with a relatively small opening; includes all cavities with entrances 2.5" to 6" across the smallest direction (for example, a vertical slit-like opening 4" across would count, as would a more circular entrance).

Small portions of the BSA contain larger trees with potential resting locations and suitable denning cavities; however, there are no potential den structures or day resting locations within the ESL where work would be conducted. Fishers are a nocturnal species averse to interacting with humans. They would likely be absent from otherwise suitable habitat within the BSA due to high levels of human disturbance, such as areas bordering roads, trails, and human habitation. No signs of fisher occupation were observed.

Ringtail

Ringtail (*Bassariscus astutus*) is a state Fully Protected mammal. It is a member of the raccoon family (*Procyonidae*) that may be found in fragmented and disturbed areas and will den inside buildings and other manmade structures. Ringtail are nocturnal carnivores that forage at night for a variety of prey, primarily small mammals, invertebrates, birds, and reptiles. Ringtail may supplement their diet with plants or fruit. In northwestern California, ringtail tend to select diurnal rest sites in proximity to steep slopes and water sources. They frequently change rest sites, although some may be revisited regularly. Most litters are born in May or June, with young beginning to forage outside the den site after two months. Dens can be in rock crevices, living and dead hollow trees, logs, brush piles, abandoned buildings, and other manmade structures. Female ringtail may regularly move young between dens.

No species-specific surveys were conducted for this species. No CNDDB occurrence information is available, as CNDDB does not track ringtail observations. No potential natal dens were observed within the ESL, however potential den sites are present within the BSA.

Sonoma Tree Vole

Sonoma tree vole (*Arborimus pomo*) is a state Species of Special Concern distributed along the North Coast of California from Sonoma County to the Oregon border, being more or less restricted to the fog belt. It is reported to be rare to uncommon throughout its range, but the difficulty of locating nests and capturing individuals make abundance difficult to assess. Sonoma tree voles occur in old-growth and other forests, mainly Douglas-fir, redwood, and montane mixed hardwood-conifer habitats.

Sonoma tree voles feed on needles of Douglas-fir and grand fir. Needles and twigs are gathered primarily at night and are either consumed on site or brought to the nest where the needle resin ducts are removed, and the remainder is eaten. The resin ducts may be used to line the nest cup. Young, tender needles are often eaten entirely. Food may be stored, and the tender bark of terminal twigs may be eaten as well.

Nests of Douglas-fir needles are constructed in trees, preferably tall trees. Nests may be situated on the whorl of the limbs against a trunk or at outer limits of branches. In young second-growth Douglas-fir, the broken tops of trees frequently are used for nesting. The Sonoma tree vole breeds year-round, but most breeding is from February through September. Litter size ranges from one to four, with an average of two. There are one or more litters per year, and two litters of different ages may occupy a nest at the same time. Young are cared for by the female only. Weaning occurs at 30 to 40 days.

No species-specific surveys were performed for this species. Trees slated for removal were investigated for signs of tree vole use. The nearest CNNDB detection of Sonoma tree vole is approximately 0.7 mile northeast of the ESL at PM 35.00 (Location 18).

Threatened And Endangered Species

Birds

Bald Eagle

Though the bald eagle (*Haliaeetus leucocephalus*) was delisted from federal status, it is still considered state endangered. It remains federally protected by the Bald and Golden Eagle Protection Act (16 USC §668). Bald eagles typically nest in large trees within one mile of fishable waters, within or directly adjacent to forests with large trees that provide suitable nesting structures. Active breeding occurs February through August. Bald eagles are known to feed on a wide variety of fish, small mammals, amphibians, reptiles, and small birds. They are also documented to scavenge for food and eat carrion. In Humboldt County, bald eagles are strongly tied to open water and undisturbed shorelines. River corridors and estuaries attract scattered individuals thought to be migrants, or otherwise nonresident, from October to March.

No species-specific surveys were performed for this species. CNDDB lists one observation 12.2 miles north of PM M53.85. The eBird database lists several detections within 2.5 miles of PM M53.85. No potential nests or nesting behavior has been observed within the project area.

Marbled Murrelet

Marbled murrelet (MAMU) (*Brachyramphus marmoratus*) is a federally threatened and state endangered species. The MAMU is a small Pacific seabird that breeds along the Pacific coast of North America from the Aleutian Archipelago and southern Alaska south to central California. In the Pacific Northwest (Washington, Oregon, and California), they have a unique life history strategy in that they feed primarily in nearshore marine waters (within a few miles of shore) but fly inland to nest in mature conifers. Nesting habitat is primarily associated with large tracts of old-growth forest, typically within 50 miles from shore, characterized by large trees, a multistoried stand, and moderate to high canopy closure. They are commonly absent from stands less than 60 acres in size. Nests are not built, but an egg is laid in a depression of moss or other debris on the limb of a large conifer. Suitable nest structures include large, mossy horizontal branches, mistletoe (*Phoradendron spp*.) infections, witches' brooms (structural deformities of the tree), and other such structures. During the March to September breeding season, MAMU typically fly along river corridors for their morning and evening nest visits.

Critical habitat for MAMU has been designated. The primary constituent elements of critical habitat for MAMU are individual trees with potential nesting platforms, forested areas within 0.5 mile of individual trees with potential nesting platforms, and a canopy height of at least one-half the site-potential tree height.

Protocol-level surveys were not conducted for MAMU. CNDDB lists multiple occurrences of MAMU detections within two miles of the BSA at multiple locations from PM 33.23 to PM M53.85. The project is within designated MAMU critical habitat. As the forest in this area is suitable habitat for MAMU, they could occur within the BSA. However, no suitable nesting habitat is present within the ESL.

Northern Spotted Owl

Northern spotted owl (NSO) (*Strix occidentalis caurina*) is a federally and state threatened species. NSO occur in the southern Cascade Range of northern California, to the Klamath Mountains, and down the Coast Ranges through Marin County. NSOs generally have large home ranges and use large tracts of land containing significant acreage of older forest to meet their biological needs. Median annual home range size varies from 985 acres (0.7-mile radius) in the California Coast Redwood Region to 3,410 acres (1.3 miles radius) in the California Coast Mixed Conifer Zone or California Cascades. Within the home range, there is a core area of concentrated use (approximately 20% of the home range) during the

breeding season. The attributes of superior NSO nesting and roosting habitat typically include a moderate-to-high canopy closure (60% to 80%); a multi-layered, multi-species canopy with large overstory trees; a high incidence of large trees with deformities (large cavities, broken tops, mistletoe infections, and debris accumulation); large accumulations of fallen trees and other debris; and sufficient open space below the canopy for flight.

Activity centers are NSO detection locations or clusters of detections within occupied nesting and roosting areas that represent the core use areas. NSO typically forages in forested habitats near a permanent water source. The owls search for food sources from a perch and then swoop or pounce on prey in vegetation or on the ground. In northwestern California, NSO individuals inhabit dense, old-growth, multi-layered mixed conifer, coast redwood (*Sequoia sempervirens*) and Douglas-fir forests, from sea level up to approximately 7,600 feet. In Douglas-fir habitats, the home range for NSO is 1.3 miles. In northwestern California, NSO nest primarily in broken tops, cavities, or on platforms (e.g., mistletoe brooms) of Douglas-fir (83%) and redwoods (9%), with a mean minimum diameter at breast height of 46.9 inches. However, NSO in northwestern California have nested in smaller diameter trees that contain the proper structural elements.

Protocol-level surveys for Northern spotted owl were not conducted for the project. The Northern spotted owl is well documented within the project vicinity, and several NSO activity centers occur within 0.25 mile of the BSA. Activity centers are NSO detections or a location or point within the core use area that represent this central location. Nest sites are typically used to identify activity centers, or in cases where nests have not been identified, breeding season roost sites or areas of concentrated nighttime detections may be used to identify activity centers.

Based on observation records and the presence of suitable nesting/roosting habitat within the BSA, Northern spotted owl is presumed to be present within the BSA. Although there are patches of conifer forest and large conifer trees within the ESL, most of the habitat is at the edge of forest stands and is located immediately adjacent to US 101, which experiences disturbance from traffic and would be avoided by nesting, foraging, and dispersing spotted owls.

Fish

Focused surveys were not conducted for fish within the BSA. Based on site visits, discussions with resource agencies, and record search results, it is presumed that Chinook salmon–California Coastal DPS, coho salmon–SONCC ESU, and steelhead–Northern California (NC) DPS may occur year-round in tributaries of the Eel River and South Fork Eel River within the BSA. None of these species are anticipated to be present at the culverts within the ESL during the in-water work period.

The South Fork Eel River and its tributaries are outside the range of the summer-run steelhead. CNDDB and the NMFS species lists show Chinook salmon, coho salmon, and winter steelhead in Eel River and its tributaries. The mainstem and South Fork Eel rivers are designated critical habitat for Chinook salmon, coho salmon, and steelhead.

Chinook Salmon

The Eel River Chinook salmon (*Oncorhynchus tshawytscha*) (Chinook)–California Coastal (CC) ESU (population 17) is federally listed as threatened and a state Species of Special Concern. Chinook salmon have a life history similar to SONCC ESU coho salmon but are easily distinguished from other *Oncorhynchus* species by their large size, with some individuals growing to more than 100 pounds.

The Eel River Basin supports only the fall-run migration ecotype of Chinook salmon. Also known as King salmon, and the largest species of Pacific salmon, adult Chinook enter the Eel River generally in early September and stage in the lower river until flows become high enough for them to navigate shallow riffles.

Chinook typically spawn in November and December, depending on rainfall patterns. The female digs nests in gravel and lays eggs for the male to fertilize. The female continues to build the nest and lay and bury eggs until the process is completed. The resulting nest consists of a mound of gravel called a redd and the males and females die soon after spawning. In late winter or spring, fry emerge from the gravel and begin their downstream migration to rear in the lower mainstem and estuary until late summer or fall before ocean entry.

Coho Salmon

The coho salmon (*Oncorhynchus kisutch*)–Southern Oregon/Northern California Coast (SONCC) ESU (population 2) is listed as threatened at the state and federal level. The SONCC ESU coho includes all naturally spawned populations of coho salmon in coastal streams between Cape Blanco, Oregon, and Punta Gorda, California, as well as salmon produced by three artificial propagation programs: the Cole River Hatchery near the Rogue River in Oregon and the Trinity River and Iron Gate (Klamath River) hatcheries in California.

Critical habitat for the SONCC coho salmon was designated in 1999 as encompassing accessible reaches of all rivers (including estuarine areas and tributaries) between the Mattole River in California and the Elk River in Oregon. Critical habitat includes all waterways, substrate, and adjacent riparian zones, but excludes: 1) areas above specific dams, 2) areas above longstanding, naturally impassible barriers, and 3) tribal lands. The proposed project is within designated critical habitat for SONCC coho salmon.

In the Eel River system, the coho spawning run occurs from December to February. Spawning is predominantly confined to the upper South Fork and its tributaries and lower tributaries of the mainstem Eel and Van Duzen rivers. Fry emergence takes place between March and July, with peak emergence between March and May. Juvenile coho typically feed and rear within the streams of their natal watershed for a year before migrating to the ocean. Coho fry may move upstream or downstream to rear after emergence. Coho rearing areas include lakes, sloughs, side channels, estuaries, beaver ponds, low-gradient tributaries to large rivers, and large areas of slack water.

Juvenile coho may rear during summer in areas of cool water inputs to the Lower Eel River. As the wide shallow channels in the project area exhibit high water temperatures beyond thermal tolerances of Pacific salmon (as recorded in the Mainstem Eel River from August through October, due to unsuitably high temperatures–even in areas of cooler water inputs where springs and tributaries may enter the river), it is unlikely that coho would be present during the summer.

Northern California Steelhead and Northern California Summer-Run Steelhead

The steelhead (*Oncorhynchus mykiss irideus*)–Northern California (NC) DPS (population 16) is a federally threatened species and a state Species of Special Concern. The NC DPS includes all naturally spawned anadromous *O. mykiss* (steelhead) populations below natural and manmade impassable barriers in California coastal river basins from Redwood Creek southward to, but not including, the Russian River, as well as some state and federal propagation programs. Steelhead in this DPS include both winter and summer-run types, and what is presently considered to be the southernmost population of summer-run steelhead in the Middle Fork Eel River. Immature steelhead that return to fresh water after only spending a few months in the ocean (half-pounder) also occur within the range of this DPS, specifically in the Mad River and Eel River. The Eel River is considered critical habitat for this DPS of steelhead.

The NC DPS summer-run steelhead subspecies (population 36) was listed as endangered under the California Endangered Species Act on June 16, 2021. Migration timing is a major difference between winter and summer-run steelhead ecotypes, but winter steelhead share many characteristics of summer-run steelhead and are similar in more ways than they are different.

Given the extensive overlap in the biological and ecological needs of winter and summer-run steelhead, factors threatening the survival of winter steelhead most likely impact summer-run steelhead to a similar degree. Summer-run steelhead migrate up coastal streams and rivers during and soon after the final high flows of April, and the migration continues through June. The migration may extend into July but then tapers off, presumably due to decreasing flows and increasing temperatures. In the Eel River system, summer-run steelhead migrate to the upper reaches of the Middle Fork Eel and the Van Duzen rivers where they hold in deep pools during the summer months. Spawning occurs from late December through April, but the exact information on the duration, location, and extent of spawning is unknown.

Most steelhead enter the river between August and June and spawn between December and April, peaking in January. Winter steelhead generally enter the river between November and April, spawning between February and April. Summer-run steelhead enter the river sexually immature and seek out deep pools for refugia during maturation through the summer months. A small run of summer-run steelhead usually enters the river from March to the end of June. Depending on water temperature, steelhead eggs hatch in 1.5 to 4 months.

Following yolk sac absorption, alevins emerge from the gravel as young juveniles and begin actively feeding. Juvenile steelhead rear in fresh water from one to four years, then migrate to the ocean as smolt.

Essential Fish Habitat

EFH for Pacific Coast salmon includes those waters and substrate necessary for salmon production needed to support a long-term sustainable salmon fishery and salmon contributions to a healthy ecosystem. Freshwater EFH for Chinook and coho salmon consists of four major components: (1) spawning and incubation; (2) juvenile rearing; (3) juvenile migration corridors; and (4) adult migration corridors. EFH for Chinook also includes adult holding habitats.

The South Fork and mainstem Eel rivers within the BSA support EFH for Chinook and coho salmon. The South Fork and mainstem Eel rivers serve as a migration corridor for juveniles and adults of both species and contain suitable spawning areas and juvenile rearing habitat; however, there is no suitable spawning or juvenile rearing habitat within the ESL.

Invertebrate Species

Monarch Butterfly

California is home to both breeding, migrating, and overwintering populations of the migratory monarch butterfly (*Danaus plexippus*) (monarch). The USFWS received a petition to list the monarch and on December 31, 2014, began the process of soliciting information consistent with the requirement on the Endangered Species Act ("Service Review"). To date, the USFWS has completed the analysis of the petition to list and determined that listing the monarch under FESA is Warranted, but Precluded; therefore, the species currently has no legal protection under FESA status but would be treated as a Candidate Species as though proposed for listing.

Currently, the monarch butterfly is not listed under the CESA; however, CDFW does classify the species as a special status invertebrate with a "S2/S3" ranking, meaning that it has a moderate to high "risk of extirpation in the state."

The distribution of monarchs throughout California depends on the season and the location. Monarchs are well known for their long-distance migrations and during the spring and summer months can be found almost anywhere in the state. In early September, West Coast migrants, those butterflies typically found to the west of the Continental Divide, begin to

migrate to suitable overwintering sites. Monarchs seek out overwintering sites with specific microclimate conditions, including dappled sunlight, high humidity, wind protection, and an absence of freezing temperatures or high winds. For these reasons, most overwintering sites along the Pacific Coast are within 1.5 miles of the Pacific Ocean. Monarchs often return to the same overwintering sites yearly, but exact roost locations may change over the season and annually, based on regional and individual site conditions. Other important factors in determining overwintering site locations include the presence of available water and abundance of fall or winter-blooming flowers because nearby nectar sources may be needed to maintain lipid levels necessary for spring migration. Tree species used for roosting are variable; blue gum eucalyptus is commonly used, possibly more for the availability of nectar from winter-blooming eucalyptus flowers more than any particular structural uniqueness.

Aggregations of overwintering monarchs generally persist through January or into February. In February and March, the surviving monarchs breed at the overwintering site before dispersing to inland habitats.

Monarch butterflies across North America have been dramatically declining since the early 1960s; the Western monarch population in particular has undergone a staggering decline in the last decade, with a current population hovering at 1% (30,000) of the approximately 10 million individuals observed in the 1980s.

Ultimately, habitat loss and forest degradation at overwintering locations in California may certainly impact monarchs on a local scale; however, this is not the main driving factor in the precipitous decline of this species across North America. Threats to monarchs are currently thought to come from a multitude of incremental changes in land use and agricultural practices in the United States and declining host plant availability, as well as climate change, nectar limitation, degradation of forest habitats across overwintering grounds, pollution, increased parasite loads, and additional stressors that have yet to be quantified or described. Specific interactions and a clear understanding of how synergistic combinations of variables might be driving the decline of this unique species have yet to be fully understood.

According to CNDDB and Xerces Society data, there are two historic overwintering roosts located approximately 83 miles south of the project, north of Anchor Bay (both referred to here as Anchor Bay roosts). Both roosts are found in habitat described as Bishop pine forest and open scrub understory. A third historical overwintering roost is also known from a location east of the town of Gualala and bordering China Gulch in Mendocino County. This roost is described as occurring in a dense mixture of coniferous forest, including Douglas-fir, redwood, and other native conifers, and likely Bishop pine. Thanksgiving counts at the

Anchor Bay roosts in 1984-1985 estimated an abundance of butterflies in the hundreds and thousands (20,000 at the more easterly site). Thousands of butterflies were observed at the southern Gualala roost in the mid-1990s. These numbers dropped dramatically along with monarch numbers throughout the west, and monarchs at all three roosts have only been counted in the single digits or not observed at all in the past decade. The most recent monarch observation during Thanksgiving counts was in 2017, when a single butterfly was seen roosting at the eastern Anchor Bay roosting location.

No complete monarch butterfly roost surveys were conducted for this project. No monarchs were observed roosting or flying during any field visits by project biologists.

Western Bumble Bee and Obscure Bumble Bee

The western bumble bee (*Bombus occidentalis*) is a species of bumble bee native to the Western United States and Canada. Western bumble bee is a state candidate endangered species. It is considered critically imperiled in the state (CDFW S1 species) because of extreme rarity (often five or fewer populations) or because of factors such as steep population declines making it especially vulnerable to extirpation from the state. This bumble bee is associated with several plant genera including *Melilotus, Cirsium, Lupinus, Trifolium, Centaurea,* and *Eriogonum*. Queens of this species emerge from hibernation in late January and select a nest site in an existing hole in the ground (such as an abandoned rodent hole). The queen gathers pollen and nectar and stores them in wax containers. She then lays 8 to 16 eggs that hatch into larvae and tends to them until they spin cocoons, pupate, and emerge as workers. Once they emerge, the queen stops foraging and devotes her time to egg laying. The first workers appear in early March and the drones and new queens emerge by the end of April. The colony dissolves in late October when the old queen, workers, and drones die. The new queens mate and dig holes in which they will hibernate through the winter.

The obscure bumble bee (*Bombus caliginosus*) is a species of bumble bee native to the west coast of the United States where its distribution extends from Washington to southern California. It is critically imperiled due to rarity, few populations, and restricted range. The obscure bumble bee is associated with several plant genera including *Baccharis, Cirsium, Lupinus, Lotus, Grindelia* and *Phacelia*. Queens of this species emerge from hibernation in late January, the first workers appear in early March, and the males follow by the end of April. Nests are usually well concealed, often underground, sometimes on the surface, and occasionally 30 to 40 feet (9 to 12 meters) above ground in trees. The colony dissolves in late October, when all the inhabitants die except the new queens.

No species-specific surveys were conducted for bumble bee species. CNDDB contains records of both bumble bee species along the US 101 corridor in Humboldt County with the most recent record of *Bombus occidentalis* collected in 1977.

Invasive Species

Introduction and naturalization of non-native species is one of the most important threats to global biodiversity. The Eel River watershed contains several invasive plant species that adversely affect ecologic functions. Some of the species that most threaten native ecosystem function and structure include giant reed (*Arundo donax*), yellow star-thistle (*Centaurea solstitialis*), jubata grass and pampas grass (*Cortaderia spp.),* Scotch broom, (*Cytisus scoparius*), French broom (*Genista monspessulana*), Harding grass (*Phalaris aquatica*), water primrose (*Ludwigia sp*.), purple loosestrife (*Lythrum salicaria*) and Spanish broom (*Spartium junceum*). Of these species, yellow star-thistle, Harding grass, and French broom were observed within the project limits.

Discussion of CEQA Environmental Checklist Question 2.4a)—Biological Resources

a) Would the project have a substantial adverse effect, either directly or through habitat modifications, on any species identified as a candidate, sensitive, or special status species in local or regional plans, policies, or regulations, or by the California Department of Fish and Wildlife, U.S. Fish and Wildlife Service, or NOAA Fisheries/NMFS?

Plant Species

Leafy-stemmed Mitrewort

The proposed project may remove two of the four patches of leafy-stemmed mitrewort within redwood forest to accommodate flow line restoration and scour repair at the culvert inlet at PM R47.01. This species has no federal or state status and has a CRPR of 4.2. CRPR 4 plant taxa are of limited distribution or infrequent throughout a broader area in California, so their vulnerability or susceptibility to threat appears low at this time, from a statewide perspective; however, they warrant monitoring for evidence of decline and subsequent transfer to a more sensitive rank (CNPS 2020).

The observed population was healthy, and the species is fairly abundant in the region. The population represents a small percentage of the total population statewide and is anticipated to continue growing within the project area. Standard measures could include the installation

of temporary high visibility fencing, if needed, to limit disturbance to the population. Project impacts are anticipated to be minor and temporary and are not expected to have an adverse impact to the species in the watershed or region. The project is anticipated to have a ***"Less than Significant Impact"*** on leafy-stemmed mitrewort. No mitigation would be required.

Western Lily

Based on the field survey results and the lack of recorded occurrences within the ESL, western lily is not expected to occur within the ESL or be impacted by the project. The project is anticipated to have ***"No Impact"*** on western lily. No mitigation would be required.

Animal Species

Amphibians and Reptiles

Foothill Yellow-legged Frog, Northern Red-legged Frog, Pacific Tailed Frog, Red-bellied Newt, Southern Torrent Salamander, and Western Pond Turtle

In work areas adjacent to or within the drainages, special status amphibians and reptiles potentially present in the project area (Foothill yellow-legged frog, Northern red-legged frog, Pacific tailed frog, red-bellied newt, Southern torrent salamander, and Western pond turtle) could be crushed by construction equipment. They could also become entrapped in trenches excavated for culvert work or stranded due to dewatering activities. The contractor would be required to prepare and submit a Construction Site Temporary Clear Water Diversion System Plan to Caltrans for authorization prior to any clear water diversion. The clear water diversion plan would include specifications for the relocation of sensitive aquatic species or an "Aquatic Species Relocation Plan." Standard measures and BMPs that include pre-construction surveys and relocation, if found, would minimize these potential impacts (Section 1.4).

Project construction could degrade water quality by increasing sediment loads associated with ground disturbance. Accidental spills of fuel, oil, or other construction-related fluids into or near waters where culvert work would occur could also degrade water quality. Degraded water quality could harm all life stages if the species are in or downstream of work areas. Standard measures and BMPs to protect water quality would minimize or avoid these potential impacts.

Due to the timing of in-water work, temporary nature of construction, standard measures to avoid and minimize impacts, and the abundance of suitable habitat in the project vicinity to which amphibians and reptiles could relocate if necessary, the impacts to special status amphibians and reptiles would be minimal. The project is anticipated to have a ***"Less than Significant Impact"*** on Foothill yellow-legged frog, Northern red-legged frog, Pacific tailed frog, red-bellied newt, Southern torrent salamander, or Western pond turtle populations. No mitigation would be required.

Birds

American Peregrine Falcon

There are four CNDDB occurrences within three miles of multiple ESLs. The closest occurrence is located on the Scotia Bluffs, 0.5 mile east of PM M53.85. Given there would be no potential nest structure removal associated with this project, the project would have no impact on American peregrine falcons or their habitat. Per Fish and Game Code Section 3511, the project would not result in "take" of peregrine falcon. It is anticipated the project would have "No Impact" on peregrine falcon. No mitigation would be required.

Migratory Birds

No active nests would be removed or altered during project activities. Impacts to migratory birds are not anticipated given the seasonal timing of vegetation removal and the standard measures to avoid disturbing active nests. The project is anticipated to have ***"No Impact"*** on migratory birds. No mitigation would be required.

Fish

Pacific Lamprey and Western Brook Lamprey

Dewatering and stream flow management at locations containing water at the time of construction could cause a rapid fluctuation in the water level and strand lamprey ammocoetes in the substrate. Clear water diversion could also impede upstream migration by adult lamprey and downstream movement of ammocoetes and macrophthalmia. Excavation of substrate within the dewatered channel could affect all age classes of ammocoetes, if present. Contaminants from accidental spills could also harm or kill ammocoetes, which are thought to have a higher propensity for accumulating toxins given they spend three to seven years filter feeding.

Ammocoetes spend most of their time burrowed in stream substrates, making them particularly susceptible to activities that involve excavation, stranding (due to dewatering), or accidental contaminant spills, potentially affecting many different age classes that tend to concentrate in the same areas due to habitat preference.

In-water salvage techniques for salmonids are often not effective for salvaging lamprey ammocoetes as ammocoetes may not emerge from dewatered substrates until they begin to desiccate, which often occurs at night after other fish salvage operations have ceased.

Most locations would be dry at the time of construction. Some of the locations may require dewatering. Dewatering and relocation efforts for lamprey would be performed in accordance with *Best Management Practices to Minimize Adverse Effects to Pacific Lamprey (Entosphenus tridentatus)* (USFWS 2010), which includes the following measures:

1. A pre-construction survey conducted by a professional fisheries biologist in areas affected by dewatering prior to construction to identify lamprey presence.
2. If present, electrofishing would be performed prior to dewatering to relocate ammocoetes within the work zone to a safe area away from the construction site.
3. Dewatering would be performed slowly over several days, or at a minimum overnight, to allow opportunity for any remaining lamprey to relocate on their own.
4. The orientation, siting, and type of fish screens used for dewatering operations would be selected to prevent entrainment by lamprey.
5. A professional fisheries biologist would be present during channel excavations to sift through removed substrate to salvage any remaining ammocoetes, returning them to the stream channel a safe distance away from the construction site.

Potential impacts to lamprey associated with dewatering and fish relocation, noise disturbance, and water quality impacts would be avoided or minimized through the implementation of the above practices and the Standard Measures and Best Management Practices described in Section 1.4. The project is not expected to result in substantial impacts on lamprey populations. The project is anticipated to have a **"*Less than Significant Impact*"** on Pacific Lamprey and Western Brook Lamprey.

Based on the above analyses, Caltrans has determined the project would have a ***"Less than Significant Impact"*** in response to CEQA Environmental Checklist Question 2.4 a). No mitigation would be required.

Mammals

Bat Species – Pallid Bat, Townsend's Big-Eared Bat, and Western Red Bat

The forested woodlands and Eel River adjacent to the project area offer foraging and roosting habitat for bats, including pallid bat, Townsend's big-eared bat, and western red bat. The roadway offers an opening in the forest for edge-foraging bats. Both day and night roosting habitat could occur within crevices and cavities of trees and snags within the BSA. No signs of bat colonies were detected within the ESL. No known maternity roosts or other colonial night roosts would be removed or altered during project activities. All vegetation removal would occur outside of the maternity season to ensure no impacts would occur to any potentially unidentified maternity roosts. Impacts to bat species are not anticipated given the lack of observation during field reviews, specific trees to be removed, seasonal timing, and scope of work. The project is anticipated to have *"**No Impact**"* on bats. No mitigation would be required.

Fisher

Given the habitat within the ESL does not contain suitable denning sites or day resting sites, it is unlikely that fisher are present within the ESL. The proximity to a heavily traveled roadway and human habitation likely deter fisher from utilizing the ESL for denning. No potential den trees would be removed during the critical denning period (March 1 through July 31). The project is anticipated to have *"**No Impact**"* on Pacific fisher. No mitigation would be required.

Ringtail

This project would not remove ringtail denning or nesting habitat. The presence of a highly traveled roadway and occupied human structures in the proximity of the BSA are likely to preclude ringtail from denning in the project area. This project would have no impact or result in "*take*" of ringtail. The project is anticipated to have *"**No Impact**"* on ringtail. No mitigation would be required.

Sonoma Tree Vole

Trees identified for potential removal are adjacent to a highly traveled roadway that would provide low quality habitat and limited use for nesting voles. The project is anticipated to have *"**No Impact**"* on Sonoma tree vole. No mitigation would be required.

Threatened And Endangered Species

Birds

Bald Eagle

CNDDB lists one observation 12.2 miles north of PM M53.85. The eBird database lists several detections within 2.5 miles of PM M53.85. No potential nests or nesting behavior has been observed within the project area. Because there would be no nest disturbance or removal associated with this project, the proposed work would have no impact on bald eagles or their habitat.

Per CESA, the project would not result in "*take*" of bald eagle. It is anticipated the project would have *"**No Impact**"* on bald eagle. No mitigation would be required.

Marbled Murrelet

No suitable nest trees or nesting habitat would be impacted as a result of the proposed project. The potential for noise-related harassment to MAMU as a result of project activities relative to ambient noise levels was evaluated using USFWS guidance *Estimating the Effects of Auditory and Visual Disturbance to Northern Spotted Owl and Marbled Murrelets in Northwestern California (*USFWS 2020). Daytime ambient noise levels within the ESLs along US 101 were estimated as High (81- 90 decibels [dB]). Based on the results of the noise evaluation, sound levels for equipment used in project activities were estimated to be Moderate (71-80 dB) to Very High (91-100 dB). Those activities that reach or exceed noise levels of Very High could result in disturbance or harassment of MAMU. Potential effects would be minimized by implementing the standard protection measures from the Programmatic Letter of Concurrence (PLOC) (USFWS 2022). Measures include:

- No removal of potential MAMU nest trees during the nesting season (March 24 through September 15).
- No construction activities generating sound levels 20 or more decibels (dB) above ambient sound levels or with maximum sound levels (ambient sound levels plus activity-generated sound levels) above 90 dB (with the exception of backup alarms) would occur between March 24 and August 5.

- Between August 6 and September 15, work that generates sound levels equal to or greater than 10 dB above ambient sound levels or above 90 dB max would observe a daily work window beginning two hours post-sunrise and ending two hours pre-sunset.
- No construction activities would occur within a visual line-of-sight of 328 feet (or consult with USFWS as needed) from any known nest locations for MAMU unless approved by USFWS.

Per FESA, based on the standard protection measures to minimize impacts on MAMU listed in Section 1.4 and in the PLOC, Caltrans has determined the proposed project ***may affect, but is not likely to adversely affect*** MAMU.

Because no suitable nesting habitat for MAMU would be removed, there would be ***no effect*** on MAMU critical habitat.

Per CESA, the project would not result in "***take***" of MAMU.

Caltrans has determined noise from the project may affect but is not likely to adversely affect MAMU and would have no effect on MAMU critical habitat. The project is anticipated to have a *"**Less than Significant Impact**"* on marbled murrelet. No mitigation would be required.

Northern Spotted Owl

Potential impacts to NSO are similar to those for MAMU. Some construction activities could reach or exceed Very High noise levels which could result in disturbance or harassment of NSO. NSO could potentially be disturbed when construction activities occur within a visual line-of-sight of a nest, which could create visual-related disturbance. Potential impacts to NSO would be minimized by implementing the standard protection measures identified in Section 1.4 and the PLOC, including the measures listed above for MAMU.

Because no suitable nesting habitat for NSO would be removed, there would be ***no effect*** on NSO critical habitat.

Per FESA, based on the standard protection measures to minimize impacts on NSO, Caltrans has determined the proposed project ***may affect, but is not likely to adversely affect*** NSO.

Because no suitable nesting habitat for NSO would be removed, there would be ***no effect*** on NSO critical habitat.

Per CESA, the project would not result in "***take***" of NSO.

The project is anticipated to have a "***Less than Significant Impact***" on Northern spotted owl. No mitigation would be required.

Fish

CC Chinook Salmon, SONCC Coho Salmon, and NC DPS Steelhead

The project has the potential to adversely affect CC Chinook salmon, SONCC coho salmon, and NC DPS steelhead, their critical habitat, and their Essential Fish Habitat (EFH). Minor vegetation removal, habitat modification, dewatering and clear water diversion, noise, visual disturbance, and water quality impacts could temporarily affect these salmonids and their designated habitats as discussed below.

Noise and Visual Disturbance

Construction activities may cause behavioral responses to stress associated with noise and visual disturbance of juvenile salmon and steelhead present during the in-stream work period between June 15 and October 15. Physical changes to the water column, caused by shading, and vibration from construction equipment and/or workers walking in or near the channels, could disrupt feeding, delay migration, or flush fish from suitable habitat, potentially making them more vulnerable to predation.

Negative effects to these and other fish from construction noise and visual disturbance would be minimized through implementation of the Standard measures and Best Managemenet Practices identified in Section 1.4 and Additional Best Management Practices (ABMPs) identified in the *Programmatic Biological Opinion for Caltrans' Routine Maintenance and Repair Activities Program in Caltrans' Districts 1, 2, and 4 (PBO*) (NMFS 2013). All in-stream work and culvert installation activities would be restricted to the period when fish populations are lowest (June 15 to October 15).

If salmon are present in the project area, potential impacts to salmon from noise and visual disturbance would likely be minor and short term, and unlikely to result in injury or mortality of fish. Exposure to individual fish is expected to be minimal, and those fish that are exposed could readily relocate to nearby suitable habitat upstream or downstream of the project sites.

Water Quality Impacts

Potential water quality impacts from project construction, dewatering, and clear water diversion include turbidity, sedimentation, and discharge of pollutants. No permanent adverse impacts to water quality are anticipated.

Turbidity and Sedimentation

Increases in suspended sediment or turbidity can affect water quality, which in turn can affect fish health and behavior. Salmonids typically avoid areas of higher suspended sediment, which means they displace themselves from their preferred habitat to seek areas with less suspended sediment. Fish unable to avoid suspended sediment can experience negative effects, the severity of which increases as a function of sediment concentration and exposure time. Suspended sediment and turbidity generally do not acutely affect aquatic organisms unless they reach extremely high levels. At levels reaching 25 mg/L, suspended sediment can adversely affect the physiology and behavior of aquatic organisms and may suppress photosynthetic activity at the base of food webs, affecting aquatic organisms either directly or indirectly. While benthic communities can normally withstand short-term increases in suspended sediment, small increases over longer or continuous durations can affect the quantity and composition of aquatic invertebrates (i.e., prey species) and reduce the production of aquatic plants.

With implementation of Caltrans standard specifications, the Standard Measures and Best Management Practices outlined in Section 1.4, and ABMPs from the PBO, potential water quality impacts and their effects on salmonids would be considered negligible because the impacts would be temporary, short-term, and limited to the construction period. The proposed project is not likely to result in a significant elevation of suspended sediment and turbidity relative to baseline conditions that would result in acute physical or behavioral effects on individual salmonids. The work would be principally conducted during the dry season (June 15 to October 15) which avoids the most vulnerable periods of adult and smolt migration and coincides with the period when juvenile salmonid populations are lowest. Disturbed soil areas would be seeded and mulched in accordance with Caltrans standard measures and specifications to control erosion and sedimentation and minimize long-term water quality impacts.

Pollutants from Stormwater Runoff and Accidental Spills

During construction, a risk would exist for the accidental release of oil, grease, wash water, solvents, drilling fluid, or other construction materials into the water. However, with implementation of Caltrans' standard specifications and standard water quality measures and Best Management Practices identified in Section 1.4, which include provisions for the proper handling, storage, and disposal of contaminants, localized degradation of water quality from construction-related spills is unlikely. The standard measures are expected to sufficiently restrict any discharged pollutants to the immediate area; therefore, chemical contamination of the project watercourses as a result of construction operations is unlikely to occur and the potential effects to salmonids are discountable. A long-term or permanent increase in pollutant loading from roadway runoff due to traffic over the existing conditions would not occur as the proposed project would not generate increased traffic volumes.

Critical Habitat and Essential Fish Habitat

Caltrans anticipates the project ***may affect, but is not likely to adversely affect*** designated critical habitat of CC Chinook salmon, SONCC coho salmon, and NC DPS steelhead. Caltrans anticipates the project could *adversely affect* Essential Fish Habitat for Chinook salmon and coho salmon. As previously discussed, water quality may be temporarily impacted during project construction. These potential impacts could compromise safe passage conditions for fish migration and reduce the quality of spawning and rearing habitat. Impacts would be temporary and short-term, taking approximately 5 to 20 days at each location.

There would also be a small temporary loss of riparian habitat as a result of vegetation removal during construction, which could degrade spawning and rearing habitat for Chinook salmon and coho salmon. Riparian vegetation influences the quality of salmonid habitat, affecting cover, food, instream habitat complexity, streambank stability, and temperature regulation. Instream woody material usually originates from riparian trees and provides cover and habitat complexity within the stream. Riparian vegetation provides shade and moderates water temperatures in both summer and winter and provides a filter that reduces the transport of fine sediment to the stream, and the roots provide streambank stability. Riparian vegetation also influences the food chain of a stream, providing organic detritus and terrestrial insects. Removal of riparian vegetation to access and rehabilitate culverts could lead to increased erosion and cause increased turbidity and sedimentation in streams, reduce shade, and lead to increased water temperatures. These changes could lead to reduced survival, growth, and reproduction of salmonids.

Potential riparian vegetation impacts and their effects on salmonid habitat are expected to be negligible due to the small size of riparian area affected at each of the culvert locations. Much of the riparian vegetation impacted would occur at culverts that are disconnected from a salmonid stream, and no riparian vegetation would be permanently removed. Riparian vegetation would be restored after construction through natural recruitment and replanting efforts in conformance with a Revegetation Plan. To minimize the effects of riparian vegetation removal, only the minimum amount of vegetation would be removed as needed to conduct work. Implementation of the Standard Measures and Best Management Practices identified in Section 1.4 and ABMPs from the PBO would further avoid or minimize impacts to EFH. Consultation with NMFS would be conducted in accordance with the PBO.

Project activities are unlikely to appreciably diminish habitat value for spawning, rearing, or migration for these listed salmonids. The project would not result in long term changes to the water chemistry or physical characteristics (e.g., substrate and flow) of the river after construction is complete. Compensatory mitigation would not be required for Chinook and coho salmon EFH given that potential effects resulting from the project are anticipated to be minor and transitory, resulting in no permanent impacts.

Considering these factors, no long-term impacts on fish or other aquatic organisms are anticipated from the minor habitat modification resulting from the project.

The project is anticipated to have a **"*Less than Significant Impact*"** on Chinook and coho salmon, steelhead, their critical habitat, and Essential Fish Habitat. No mitigation is required.

Invertebrates

Monarch Butterfly

The proposed project anticipates vegetation removal and access road creation to allow for construction. As such, the proposed project could potentially result in short-term direct and indirect construction impacts to monarch butterflies if they congregate within the project site and/or immediate vicinity, and construction activities occur during overwinter season (generally October to March). However, due to the distance from last known occurrences in the region, lack of quality of habitat within the ESLs, and precipitous decline of the species in general, it is highly unlikely that monarch butterflies would be present during construction or affected by construction activities.

Per FESA, the project would have "***No Effect***" on monarch butterfly.

Per CEQA, the project is anticipated to have ***"No Impact"*** on monarch butterfly populations.

No mitigation would be required.

Western Bumble Bee and Obscure Bumble Bee

Most ground disturbance for this project would occur in areas seasonally flooded during the hibernation period of bumble bees. Areas that are not seasonally flooded are routinely disturbed by activity along the road edge which is cleared and maintained. Because the potential nesting areas are inundated with water during the hibernation period or routinely mowed and disturbed, bumble bees are not anticipated to be overwintering in areas proposed for project access.

Per CESA, the project would not result in "*take*" of western bumble bee or obscure bumble bee.

The project is anticipated to have ***"No Impact"*** on western bumble bee or obscure bumble bee populations. No mitigation would be required.

Discussion of CEQA Environmental Checklist Question 2.4b)—Biological Resources

> ***b) Would the project have a substantial adverse effect on any riparian habitat or other sensitive natural community identified in local or regional plans, policies, regulations or by the California Department of Fish and Wildlife or U.S. Fish and Wildlife Service?***

Sensitive Natural Communities

The project would result in up to 2.774 acres of temporary impacts to SNCs. In descending order of area impacted, these would include Redwood (*Sequoia sempervirens*) Forest and Woodland, California Bay (*Umbellularia californica*) Forest and Woodland, Douglas-fir (*Pseudotsuga menziesii)* Forest and Woodland, Madrone (*Arbutus menziesii*) Forest, Blue Wildrye (*Elymus glaucus*) Prairie, Oregon White Oak (*Quercus garryana*) Woodland and Forest, and Slough Sedge Bulrush (*Carex obnupta)* marsh (Table 6). No permanent impacts are anticipated.

Table 6. Temporary Impacts to Sensitive Natural Communities within the ESL

Sensitive Natural Community	Square Feet	Acres
Redwood Forest and Woodland	101,767	2.336
California Bay Forest and Woodland	9,300	0.152
Douglas-fir Forest and Woodland	6,221	0.143
Madrone Forest	3,559	0.082
Blue Wildrye Prairie	1,207	0.028
Oregon White Oak Woodland and Forest	1,000	0.023
Slough Sedge Bulrush Marsh	505	0.012
Total Area of Impact	**123,559**	**2.774**

No significant impact is anticipated because the forest areas within the ESL are second-growth forest and, because of the proximity of the road corridor, the forest areas along the road are already influenced by edge effects and habitat fragmentation. These forest vegetation types, which are typically much less than one acre in extent within the ESLs, are unlikely to be considered representative of any sensitive alliances or associations. The affected community types are abundant in the watersheds and the region, and the area of disturbance to these communities is so small as to be inconsequential on a landscape scale.

Riparian Vegetation

The project would result in a total of approximately 0.238 acre (10,362 square feet) of temporary impacts to riparian vegetation at multiple locations within the 42.41-acre ESL. Riparian vegetation would be trimmed and removed to create access to those culvert locations not currently accessible. Revegetation would occur due to natural recruitment and replanting efforts conducted in conformance with the project Revegetation Plan which would return these areas to pre-project conditions upon completion of the project. As applicable, depending on final design and impacts, riparian areas would be planted with riparian vegetation with the goal to shade any waters and to replace habitat. Riparian trees removed for construction would be replaced by at least an equal number of living, installed, volunteer, and/or resprouting native woody plants (see Appendix D for a description of the project revegetation strategy). No riparian vegetation would be permanently removed.

Because the overall area of disturbance to this habitat is relatively small, spread out over multiple locations across approximately 52 miles, and temporary in nature, impacts to this habitat are expected to be minimal. To further minimize the effects of riparian vegetation removal, only the minimum amount of vegetation would be removed and the standard measures described in Section 1.4 would be implemented.

Tree Removal

Some locations would require tree removal for the construction of temporary access roads or for culvert rehabilitation as shown in Table 7.

Table 7. Estimated Tree Removal within the ESL

Tree Species	8-16″ dbh	17-24″ dbh	Total
Redwood *(Sequoia sempervirens)*	8	3	11
California bay *(Umbellularia californica)*	1	0	1
Douglas-fir *(Pseudotsuga menziesii)*	1	1	2
Red Alder *(Alnus rubra)*	2	0	2
Bigleaf Maple *(Acer macrophyllum)*	2	0	2
Oregon ash *(Fraxinus latifolia)*	1	0	1
Tan oak *(Notholithocarpus densiflorus)*	0	1	1
Total	**15**	**5**	**20**

Up to 20 trees between 8 and 24 inches dbh may be removed from multiple locations within the 42-acre ESL. The largest trees potentially removed include 3 coast redwood trees, one Douglas-fir, and one tan oak, each tree between 17 and 24 inches dbh. Relative to the 52 miles of project corridor, the removal of these 20 trees is considered a negligible impact and would not have a substantial effect on the overall quality, characteristics, or structure of the redwood forest and woodland community or other communities within the ESL. Standard measures are included as part of the project to protect the structural root zone and root health zone of mature trees from damage (Section 1.4).

Invasive Species

Invasive species may be introduced to new areas or spread through the work sites by the tires and tracks of construction equipment. They may also recruit naturally and robustly, outcompeting native species, following soil disturbance. Yellow star-thistle, Harding grass, and French broom were observed within the project limits.

To reduce the spread of invasive species, Caltrans endeavors to eradicate newly introduced invasive species ranked as having high ecological impact by the California Invasive Plant Council (Cal-IPC)[2] (Caltrans 2022f). Caltrans Standard Measures and Best Management Practices would be implemented to minimize the colonization of invasive species that could adversely impact natural communities (Section 1.4). Such measures include the inspection and cleaning of construction equipment to remove invasive species and/or pathogens during construction, seeding disturbed areas with native herbaceous species post construction, and applying weed-free mulch.

Given the above, the project is anticipated to have a ***"Less Than Significant Impact"*** in response to CEQA Environmental Checklist Question 2.4 b). No mitigation would be required.

Discussion of CEQA Environmental Checklist Question 2.4c)—Biological Resources

> ***c) Would the project have a substantial adverse effect on state or federally protected wetlands (including, but not limited to, marsh, vernal pool, coastal, etc.) through direct removal, filling, hydrological interruption, or other means?***

The proposed project would have temporary and permanent impacts to jurisdictional waters of the U.S. and State due to replacement and/or repair of culverts and associated end treatments. Impacts to aquatic resources were considered temporary if fill would be removed following completion of construction and the temporarily disturbed portions of aquatic resources would be restored. Additional indirect temporary impacts caused by sedimentation or modification of hydrology could affect streams, wetlands, or riparian habitat. Temporary impacts may result from the construction of access roads, work areas, containment systems, clear water diversions and excavation work for culvert placement.

[2] These species have severe ecological impacts on physical processes, plant and animal communities, and vegetation structure. Their reproductive biology and other attributes are conducive to moderate to high rates of dispersal and establishment. Most are widely distributed ecologically.

Permanent impacts to Other Waters of the U.S. and State would result from culvert realignment, scour repair and restoration of flow lines, rock slope protection, and the extension of culvert systems. Table 6 summarizes the temporary and permanent impacts to aquatic resources within the ESL.

Table 8. Impacts to Wetlands and Other Waters

Jurisdictional Feature	Temporary Impact			Permanent Impact		
	Linear Feet	Square Feet	Acres	Linear Feet	Square Feet	Acres
Wetlands	N/A	6,023	0.138	36	583	0.013
Other Waters	6,943	18,161	0.417	308	2,477	0.057
Totals	**6,943**	**24,184**	**0.555**	**344**	**3,060**	**0.070**

The total area of jurisdictional waters temporarily impacted by the project is estimated to be 24,184 square feet. The total area of jurisdictional waters permanently impacted by the project is estimated to be 3,060 square feet. These totals reflect the sum of impacts at each of the individual locations. Permanent displacement of these small areas of jurisdictional waters is not anticipated to have an adverse impact on the quality or function of the adjacent riverine systems or affect wildlife corridors. However, Caltrans proposes to meet all compensatory mitigation for project impacts through a combination of on-site revegetation, on-site restoration of Waters of the U.S./State, and use of state wetland credits as outlined in the Cooperative Agreement for the HUM-36-Fen Parcel ("Fen Parcel") (Appendix D). A detailed description of the on-site Revegetation Plan will be available once the area of replanting is determined based on final project design. At this time, it is anticipated Caltrans will be able to offset on-site all temporary and permanent impacts to non-wetland waters habitats directly from project activities (e.g., upsizing, shortening, and/or daylighting culverts), all temporarily impacted wetlands habitats, and all impacted riparian resources. Permanent impacts to wetland habitats are not anticipated to be offset on-site; therefore, Caltrans proposes to utilize state wetland credits available at the Fen Parcel to mitigate for permanent impacts to wetlands that would not be mitigated on-site.

Given the above, the project is expected to have a **"*Less Than Significant Impact with Mitigation Incorporated*"** in response to CEQA Environmental Checklist Question 2.4c).

Discussion of CEQA Environmental Checklist Question 2.4d)—Biological Resources

d) Would the project interfere substantially with the movement of any native resident or migratory fish or wildlife species or with established native resident or migratory wildlife corridors, or impede the use of native wildlife nursery sites?

The Eel River and South Fork Eel River and the drainage systems that feed them provide migration corridors, habitat, and foraging for terrestrial animal species. None of the drainage systems are barriers to fish passage. The project would increase the size of over half of the existing culverts, which is expected to generally improve access for terrestrial species and have an *overall net beneficial effect* on wildlife passage in the project area.

Given the project would have an overall long-term benefit to habitat connectivity, Caltrans anticipates the project would have ***"No Impact"*** in response to CEQA Environmental Checklist Question 2.4 d). No mitigation would be required.

Discussion of CEQA Environmental Checklist Question 2.4e)—Biological Resources

e) Would the project conflict with any local policies or ordinances protecting biological resources, such as a tree preservation policy or ordinance?

Based on the scope, description, and location of the proposed project, the project would not conflict with local policies or ordinances protecting biological resources. The project would have ***"No Impact"*** in response to CEQA Environmental Checklist Question 2.4 e). No mitigation would be required.

Discussion of CEQA Environmental Checklist Question 2.4f)—Biological Resources

f) Would the project conflict with the provisions of an adopted Habitat Conservation Plan, Natural Community Conservation Plan, or other approved local, regional, or state habitat conservation plan?

Based on the scope, description, and location of the proposed project, the project would not conflict with an approved local, regional, or state habitat conservation plan. The project would have ***"No Impact"*** in response to CEQA Environmental Checklist Question 2.4 f). No mitigation would be required.

Mitigation Measures

To compensate for impacts to state wetlands at the project site (CEQA Environmental Checklist Question 2.4c), Caltrans has utilized fen credits at the Fen Parcel located along SR 36, between the towns of Bridgeville and Dinsmore, within the Lower Eel River and Lower Van Duzen River watersheds. The parcel consists of 114 acres of upland forest surrounding and encompassing a ±5.11-acre sensitive fen. The Fen Parcel adjoins a 155.3-acre CDFW parcel that contains the majority of the fen. Acquisition of the Fen Parcel was completed in 2022 to add further protections from land development activities that highly threatened the fen's sensitive resources. Caltrans worked with CDFW and NCRWQCB to acquire the 114-acre parcel for preservation and compensatory mitigation for eight programmed projects occurring within the Lower and South Fork Eel River watersheds, including the HUM 101 Drainage South Project.

The projected permanent impacts to state wetlands from the project was initially 1.25 acres. The current estimate is about 0.07 acre. Approximately 0.555 acres of state wetlands would be temporarily impacted, and therefore not subject to off-site mitigation (Table 5).

A Draft Mitigation Summary for the HUM 101 Drainage South Project is provided in Appendix D.

2.5 Cultural Resources

Would the project:	Significant and Unavoidable Impact	Less Than Significant with Mitigation Incorporated	Less Than Significant Impact	No Impact
Would the project: a) Cause a substantial adverse change in the significance of a historical resource pursuant to § 15064.5?				✓
Would the project: b) Cause a substantial adverse change in the significance of an archaeological resource pursuant to § 15064.5?				✓
Would the project: c) Disturb any human remains, including those interred outside of dedicated cemeteries?				✓

"No Impact" determinations in this section are based on the scope, description, and location of the proposed project, as well as the *Initial Cultural Resources Findings* memo, dated August 5, 2022 (Caltrans 2022g), *Archaeological Survey Report* dated February 2023 (Caltrans 2023b), *Historic Property Survey Report* dated February 2023 (Caltrans 2023c), and consultation with the Native American Heritage Commission and local tribes. Efforts to locate cultural resources resulted in the conclusion that there are no cultural resources within the Area of Direct Impact. Based on the findings of the archaeological survey, it has been determined that *No Historic Properties will be Affected* as a result of this proposed undertaking. No new archaeological resources were located. Ethnographic resources would not be impacted, and no historic resources/built environment resources would be affected. Consultation with Native American tribes will continue throughout the life of this project in order to manage concerns and address work within/adjacent to Reservation lands.

If previously unidentified cultural materials are unearthed during construction, it is Caltrans policy that work be halted in that area until a qualified archaeologist can assess the significance of the find. Additional archaeological survey would be required if the scope of the project changes to include areas not previously surveyed. Standard measures CR-1 and CR-2 in Section 1.4 would protect cultural resources should they be discovered during construction activities.

During the public comment period, the Wiyot Tribe recommended "inadvertent discovery protocol," which is a Caltrans standard specification required for the project. This means Caltrans and its contractors must follow 36 CFR 800.13, which requires the following actions in the event that cultural items are encountered during construction: 1) all work in the area of the discovery must be suspended, 2) all consulted parties would be notified to consult on the discovery, 3) a qualified archaeologist, working with the consulting parties, would make a determination on what was encountered, and 4) if the discovery is determined to be a previously undocumented cultural resource, a plan would be developed and implemented in consultation with the consulting parties.

Given the above, Caltrans anticipates the project would have ***"No Impact"*** on cultural resources. No mitigation would be required.

2.6 Energy

Question	Significant and Unavoidable Impact	Less Than Significant with Mitigation Incorporated	Less Than Significant Impact	No Impact
Would the project: a) Result in a potentially significant environmental impact due to wasteful, inefficient, or unnecessary consumption of energy resources during project construction or operation?				✓
Would the project: b) Conflict with or obstruct a state or local plan for renewable energy or energy efficiency?				✓

"No Impact" determinations in this section are based on the scope, description, and location of the proposed project, as well as the Environmental Impact Evaluation of Air Quality, Traffic Noise, and Greenhouse Gas dated February 11, 2022 (Caltrans 2022b) and Environmental Impact Evaluation–Energy dated February 18, 2022 (Caltrans 2022h). As the project would not increase capacity or provide congestion relief when compared to the No-Build Alternative, a net increase in energy consumption is not anticipated. Therefore, long-term impacts to direct energy (mobile sources) are not anticipated. The project does not include maintenance activities which would result in long-term indirect energy consumption by equipment required to operate and maintain the roadway; thus, is unlikely to increase indirect energy consumption through increased fuel usage. Potential impacts to indirect energy (construction) are not anticipated.

Construction activities would last less than two years. Project construction would primarily consume diesel and gasoline through operation of construction equipment, material deliveries, debris hauling, and the use of construction workers' motor vehicles as they travel to and from the site. Energy use associated with project construction is estimated to result in the short-term consumption of diesel and gasoline powered equipment, which represents a small and temporary demand on local and regional fuel supplies. This temporary demand for fuel would have no noticeable effect on peak or baseline demands for energy. Therefore, the project would not result in an inefficient, wasteful, and unnecessary consumption of energy.

Caltrans anticipates the project would have ***"No Impact"*** on energy. No mitigation would be required.

2.7 Geology and Soils

Question	Significant and Unavoidable Impact	Less Than Significant with Mitigation Incorporated	Less Than Significant Impact	No Impact
Would the project: a) Directly or indirectly cause potential substantial adverse effects, including the risk of loss, injury, or death involving: i) Rupture of a known earthquake fault, as delineated on the most recent Alquist-Priolo Earthquake Fault Zoning Map issued by the State Geologist for the area or based on other substantial evidence of a known fault? Refer to Division of Mines and Geology Special Publication 42.				✓
ii) Strong seismic ground shaking?				✓
iii) Seismic-related ground failure, including liquefaction?				✓
iv) Landslides?				✓
Would the project: b) Result in substantial soil erosion or the loss of topsoil?				✓
Would the project: c) Be located on a geologic unit or soil that is unstable, or that would become unstable as a result of the project, and potentially result in on- or off-site landslide, lateral spreading, subsidence, liquefaction or collapse?				✓
Would the project: d) Be located on expansive soil, as defined in Table 18-1-B of the Uniform Building Code (1994), creating substantial risks to life or property?				✓

Question	Significant and Unavoidable Impact	Less Than Significant with Mitigation Incorporated	Less Than Significant Impact	No Impact
Would the project: e) Have soils incapable of adequately supporting the use of septic tanks or alternative wastewater disposal systems where sewers are not available for the disposal of wastewater?				✓
Would the project: f) Directly or indirectly destroy a unique paleontological resource or site or unique geologic feature?				✓

"No Impact" determinations in this section are based on the scope, description, and location of the proposed project, as well as the California Geological Survey (CGS) Regulatory Maps (CGS 2015a). The project is not located in an Alquist-Priolo Fault Hazard Zone. Although US 101 does have landslide activity mapped throughout the project area (CGS 2015b), this project proposes to rehabilitate or replace existing drainage facilities and would not result in substantial adverse effects involving risk of loss, injury, or death. Many culvert diameters would be upsized which would decrease water velocities at the outlets of the culverts to address scour and reduce soil erosion. Standard Measures and BMPs have been incorporated into the project to prevent or minimize erosion by protecting existing vegetation, implementing an Erosion Control Plan, and stabilizing slopes and soils in accordance with a revegetation plan (refer to AR-1, BR-4E, GS-1, WQ-1 and WQ-2 in Section 1.4). The project would not involve the building of structures or foundations or the disposal of wastewater.

Potential impacts to paleontological resources are not anticipated because the project work would occur within previously disturbed materials (constructed roadway), largely as fill prisms, thus reducing the likelihood of finding intact or undisturbed specimens. Given the existing footprint of the drainage facilities, unique paleontological resources or geologic features are not anticipated to be destroyed.

Caltrans anticipates the project would have ***"No Impact"*** on geology and soils. No mitigation would be required.

2.8 Greenhouse Gas Emissions

Question	Significant and Unavoidable Impact	Less Than Significant with Mitigation Incorporated	Less Than Significant Impact	No Impact
Would the project: a) Generate greenhouse gas emissions, either directly or indirectly, that may have a significant impact on the environment?			✓	
Would the project: b) Conflict with an applicable plan, policy or regulation adopted for the purpose of reducing the emissions of greenhouse gases?				✓

Climate Change

Climate change refers to long-term changes in temperature, precipitation, wind patterns, and other elements of the Earth's climate system. The Intergovernmental Panel on Climate Change, established by the United Nations and World Meteorological Organization in 1988, is devoted to greenhouse gas (GHG) emissions reduction and climate change research and policy. Climate change in the past has generally occurred gradually over millennia, or more suddenly in response to cataclysmic natural disruptions. The research of the Intergovernmental Panel on Climate Change and other scientists over recent decades, however, has unequivocally attributed an accelerated rate of climatological changes over the past 150 years to GHG emissions generated from the production and use of fossil fuels.

Human activities generate GHGs consisting primarily of carbon dioxide (CO_2), methane (CH_4), nitrous oxide (N_2O), tetrafluoromethane, hexafluoroethane, sulfur hexafluoride (SF_6), and various hydrofluorocarbons (HFCs). CO_2 is the most abundant GHG; while it is a naturally occurring and necessary component of Earth's atmosphere, fossil-fuel combustion is the main source of additional, human-generated CO_2 that is the main driver of climate change. In the U.S. and in California, transportation is the largest source of GHG emissions, mostly CO_2.

The impacts of climate change are already being observed in the form of sea level rise, drought, more intense heat, extended and severe fire seasons, and historic flooding from changing storm patterns. Both mitigation and adaptation strategies are necessary to address these impacts. The most important mitigation strategy is to reduce GHG emissions. In the context of climate change (as distinct from CEQA and NEPA), "mitigation" involves actions to reduce GHG emissions or to enhance the "sinks" that store them (such as forests and soils) to lessen adverse impacts. "Adaptation" is planning for and responding to impacts to reduce vulnerability to harm, such as by adjusting transportation design standards to withstand more intense storms, heat, and higher sea levels. This analysis will include a discussion of both in the context of this transportation project.

Regulatory Setting

This section outlines federal and state efforts to comprehensively reduce GHG emissions from transportation sources.

FEDERAL

To date, no national standards have been established for nationwide mobile-source GHG reduction targets, nor have any regulations or legislation been enacted specifically to address climate change and GHG emissions reduction at the project level.

The National Environmental Policy Act (NEPA) (42 United States Code [USC] Part 4332) requires federal agencies to assess the environmental effects of their proposed actions prior to making a decision on the action or project.

The Federal Highway Administration (FHWA) recognizes the threats that extreme weather, sea level change, and other changes in environmental conditions pose to valuable transportation infrastructure and those who depend on it. FHWA therefore supports a sustainability approach that assesses vulnerability to climate risks and incorporates resilience into planning, asset management, project development and design, and operations and maintenance practices (FHWA 2022). This approach encourages planning for sustainable highways by addressing climate risks while balancing environmental, economic, and social values—"the triple bottom line of sustainability" (FHWA n.d.). Program and project elements that foster sustainability and resilience also support economic vitality and global efficiency, increase safety and mobility, enhance the environment, promote energy conservation, and improve the quality of life.

The federal government has taken steps to improve fuel economy and energy efficiency to address climate change and its associated effects. The most important of these was the Energy Policy and Conservation Act of 1975 (42 USC Section 6201), as amended by the Energy Independence and Security Act (EISA) of 2007, and Corporate Average Fuel Economy (CAFE) Standards. This act established fuel economy standards for on-road motor vehicles sold in the United States. The U.S. Department of Transportation's National Highway Traffic and Safety Administration (NHTSA) sets and enforces the CAFE standards based on each manufacturer's average fuel economy for the portion of its vehicles produced for sale in the United States. The United States Environmental Protection Agency (U.S. EPA) calculates average fuel economy levels for manufacturers, and also sets related GHG emissions standards under the Clean Air Act. Raising CAFE standards leads automakers to create a more fuel-efficient fleet, which improves our nation's energy security, saves consumers money at the pump, and reduces GHG emissions (U.S. DOT 2014).

U.S. EPA published a final rulemaking on December 30, 2021, that raised federal GHG emissions standards for passenger cars and light trucks for model years 2023 through 2026, increasing in stringency each year. The updated GHG emissions standards will avoid more than 3 billion tons of GHG emissions through 2050. In April 2022 NHTSA announced corresponding new fuel economy standards for model years 2024 through 2026, which will reduce fuel use by more than 200 billion gallons through 2050 compared to the old standards and reduce fuel costs for drivers (U.S. EPA 2022a; NHTSA 2022).

STATE

California has been innovative and proactive in addressing GHG emissions and climate change by passing multiple Senate and Assembly bills and executive orders (EOs) including, but not limited to, the following:

EO S-3-05 (June 1, 2005): The goal of this EO is to reduce California's GHG emissions to: (1) year 2000 levels by 2010, (2) year 1990 levels by 2020, and (3) 80 percent below year 1990 levels by 2050. This goal was further reinforced with the passage of Assembly Bill (AB) 32 in 2006 and Senate Bill (SB) 32 in 2016.

Assembly Bill (AB) 32, Chapter 488, 2006, Núñez and Pavley, The Global Warming Solutions Act of 2006: AB 32 codified the 2020 GHG emissions reduction goals outlined in EO S-3-05, while further mandating that the California Air Resources Board (CARB) create a scoping plan and implement rules to achieve "real, quantifiable, cost-effective reductions of greenhouse gases." The Legislature also intended that the statewide GHG emissions limit

continue in existence and be used to maintain and continue reductions in emissions of GHGs beyond 2020 (Health and Safety Code [H&SC] Section 38551(b)). The law requires the CARB to adopt rules and regulations in an open public process to achieve the maximum technologically feasible and cost-effective GHG reductions.

EO S-01-07 (January 18, 2007): This order sets forth the low carbon fuel standard (LCFS) for California. Under this EO, the carbon intensity of California's transportation fuels is to be reduced by at least 10 percent by the year 2020. CARB re-adopted the LCFS regulation in September 2015, and the changes went into effect on January 1, 2016. The program establishes a strong framework to promote the low-carbon fuel adoption necessary to achieve the governor's 2030 and 2050 GHG reduction goals.

Senate Bill (SB) 375, Chapter 728, 2008, Sustainable Communities and Climate Protection: This bill requires the CARB to set regional emissions reduction targets for passenger vehicles. The Metropolitan Planning Organization (MPO) for each region must then develop a "Sustainable Communities Strategy" (SCS) that integrates transportation, land-use, and housing policies to plan how it will achieve the emissions target for its region.

SB 391, Chapter 585, 2009, California Transportation Plan: This bill requires the State's long-range transportation plan to identify strategies to address California's climate change goals under AB 32.

EO B-16-12 (March 2012) orders State entities under the direction of the Governor, including the CARB, the California Energy Commission, and the Public Utilities Commission, to support the rapid commercialization of zero-emission vehicles. It directs these entities to achieve various benchmarks related to zero-emission vehicles.

EO B-30-15 (April 2015) establishes an interim statewide GHG emission reduction target of 40 percent below 1990 levels by 2030 to ensure California meets its target of reducing GHG emissions to 80 percent below 1990 levels by 2050. It further orders all state agencies with jurisdiction over sources of GHG emissions to implement measures, pursuant to statutory authority, to achieve reductions of GHG emissions to meet the 2030 and 2050 GHG emissions reductions targets. It also directs CARB to update the *Climate Change Scoping Plan* to express the 2030 target in terms of million metric tons of carbon dioxide equivalent (MMTCO2e). (GHGs differ in how much heat each traps in the atmosphere, called global warming potential, or GWP. CO_2 is the most important GHG, so amounts of other gases are expressed relative to CO_2 using a metric called "carbon dioxide equivalent" or CO_2e. The global warming potential of CO_2 is assigned a value of 1, and the GWP of other gases is

assessed as multiples of CO_2.) Finally, it requires the Natural Resources Agency to update the state's climate adaptation strategy, *Safeguarding California*, every 3 years, and to ensure that its provisions are fully implemented.

SB 32, Chapter 249, 2016, codifies the GHG reduction targets established in EO B-30-15 to achieve a mid-range goal of 40 percent below 1990 levels by 2030.

SB 1386, Chapter 545, 2016, declared "it to be the policy of the state that the protection and management of natural and working lands … is an important strategy in meeting the state's greenhouse gas reduction goals, and would require all state agencies, departments, boards, and commissions to consider this policy when revising, adopting, or establishing policies, regulations, expenditures, or grant criteria relating to the protection and management of natural and working lands."

SB 743, Chapter 386 (September 2013): This bill changes the metric of consideration for transportation impacts pursuant to CEQA, from a focus on automobile delay to alternative methods focused on vehicle miles traveled, to promote the state's goals of reducing greenhouse gas emissions and traffic related air pollution and promoting multimodal transportation while balancing the needs of congestion management and safety.

SB 150, Chapter 150, 2017, Regional Transportation Plans: This bill requires the CARB to prepare a report that assesses progress made by each metropolitan planning organization in meeting their established regional greenhouse gas emission reduction targets.

EO B-55-18 (September 2018) sets a new statewide goal to achieve and maintain carbon neutrality no later than 2045. This goal is in addition to existing statewide targets of reducing GHG emissions.

AB 1279, Chapter 337, 2022, The California Climate Crisis Act: This bill mandates carbon neutrality by 2045 and establishes an emissions reduction target of 85% below 1990 level as part of that goal. This bill solidifies a goal included in EO B-55-18. It requires the CARB to work with relevant state agencies to ensure that updates to the scoping plan identify and recommend measures to achieve these policy goals and to identify and implement a variety of policies and strategies that enable carbon dioxide removal solutions and carbon capture, utilization, and storage technologies in California, as specified.

Environmental Setting

The proposed project is in a low-density rural area, with a primarily natural resources and tourism-based economy. Much of the project site is within or adjacent to federal and state parks. US 101 is the main transportation route through the area for both passenger and commercial vehicles. Traffic counts are low, and US 101 is rarely congested. While this project stretches across over 50 miles of US 101, the nearest alternate route is south to State Route (SR) 20, east to I-5, and north to SR 36, which is a 250-mile detour, with portions being on single-lane rural roads designed for very light traffic. This alternative route is not comparable to the existing route through the project area as it would significantly increase travel time and distance.

The Humboldt County Association of Governments (HCAOG), acting as the Regional Transportation Agency (RTA), guides transportation development in the project area. The Humboldt County General Plan Circulation, Air Quality, and Energy elements, as well as the Variety in Rural Options of Mobility (VROOM) portion of the RTP, address GHGs in the project area (County of Humboldt 2017 and 2022).

GHG Inventories

A GHG emissions inventory estimates the amount of GHGs discharged into the atmosphere by specific sources over a period of time, such as a calendar year. Tracking annual GHG emissions allows countries, states, and smaller jurisdictions to understand how emissions are changing and what actions may be needed to attain emission reduction goals. U.S. EPA is responsible for documenting GHG emissions nationwide, and the CARB does so for the state, as required by H&SC Section 39607.4. Cities and other local jurisdictions may also conduct local GHG inventories to inform their GHG reduction or climate action plans.

NATIONAL GHG INVENTORY

The annual GHG inventory submitted by the U.S. EPA to the United Nations provides a comprehensive accounting of all human-produced sources of GHGs in the United States. Total GHG emissions from all sectors in 2020 were 5,222 million metric tons (MMT), factoring in deductions for carbon sequestration in the land sector. Of these, 79% were CO_2, 11% were CH_4, and 7% were N_2O; the balance consisted of fluorinated gases. Total GHGs in 2020 decreased by 21% from 2005 levels and 11% from 2019. The change from 2019 resulted primarily from less demand in the transportation sector during the COVID-19 pandemic.

The transportation sector was responsible for 27% of total U.S. GHG emissions in 2020, more than any other sector (Figure 3), and for 36% of all CO_2 emissions from fossil fuel combustion. Transportation CO_2 emissions for 2020 decreased 13% from 2019 to 2020 but were 7% higher than transportation CO_2 emissions in 1990 (Figure 4) (U.S. EPA 2022b).

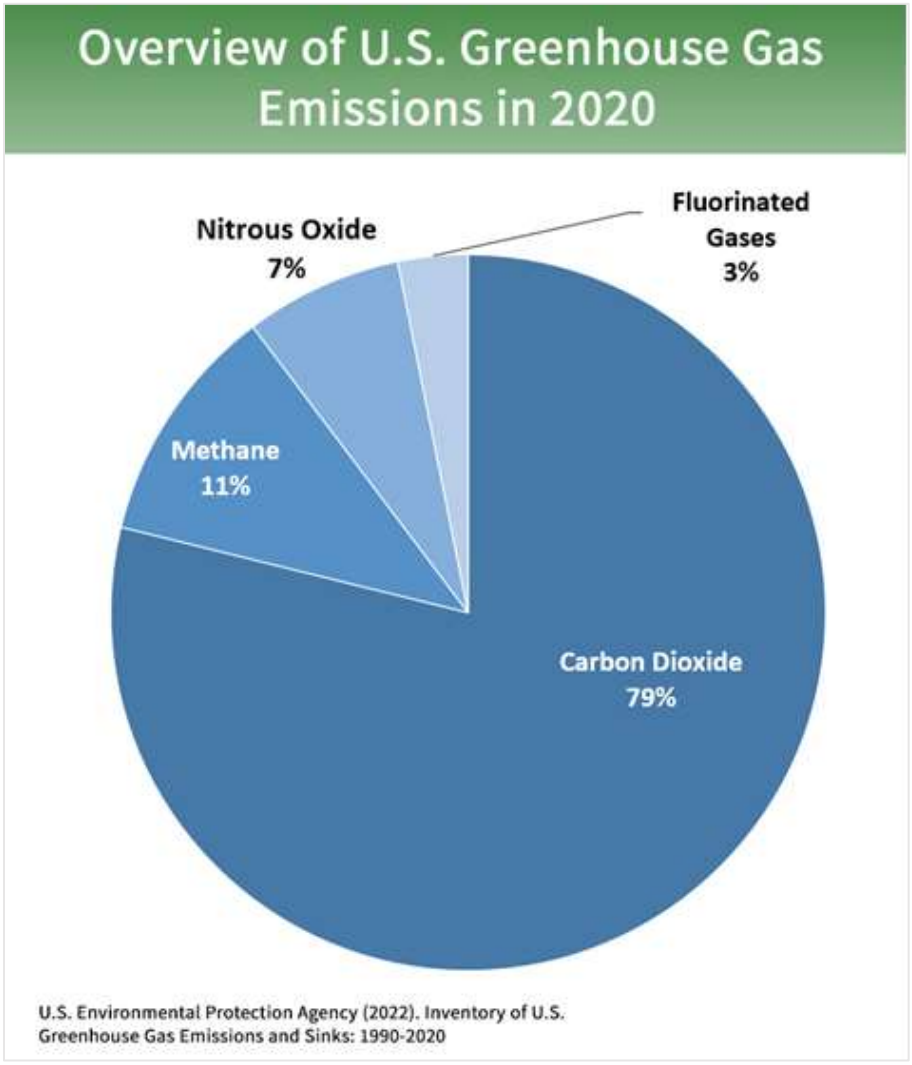

Figure 3. U.S. GHG Emissions in 2020

(Source U.S. EPA 2022b)

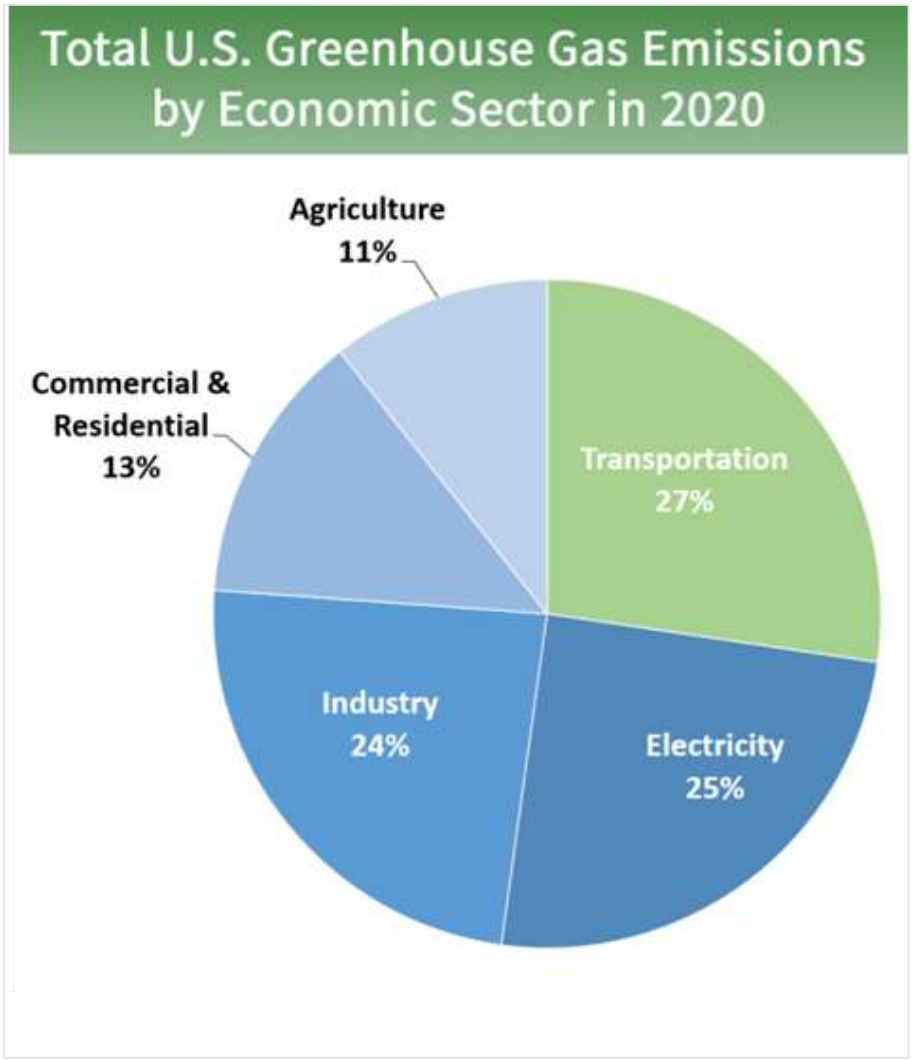

Figure 4. U.S. GHG Emissions by Economic Sector in 2020

(Source U.S. EPA 2022b)

STATE GHG INVENTORY

The CARB collects GHG emissions data for transportation, electricity, commercial and residential, industrial, agricultural, and waste management sectors each year. It then summarizes and highlights major annual changes and trends to demonstrate the state's progress in meeting its GHG reduction goals. The 2022 edition of the GHG emissions inventory reported emissions trends from 2000 to 2020. Total California GHG emissions in 2020 were 369.2 MMTCO2e, a reduction of 35.3 MMTCO2e from 2019 and 61.8 MMTCO2e below the 2020 statewide limit of 431 MMTCO2e. Much of the decrease from 2019 to 2020, however, is likely due to the effects of the COVID-19 pandemic on the transportation sector, during which vehicle miles traveled declined under stay-at-home orders and reductions in goods movement. Nevertheless, transportation remained the largest source of GHG emissions, accounting for 37% of statewide emissions (Figure 5). (Including upstream emissions from oil extraction, petroleum refining, and oil pipelines in California, transportation was responsible for about 47% of statewide emissions in 2020; however, those emissions are accounted for in the industrial sector.) California's gross domestic product (GDP) and GHG intensity (GHG emissions per unit of GDP) both declined from 2019 to 2020 (Figure 6). It is expected that total GHG emissions will increase as the economy recovers over the next few years (CARB 2022a).

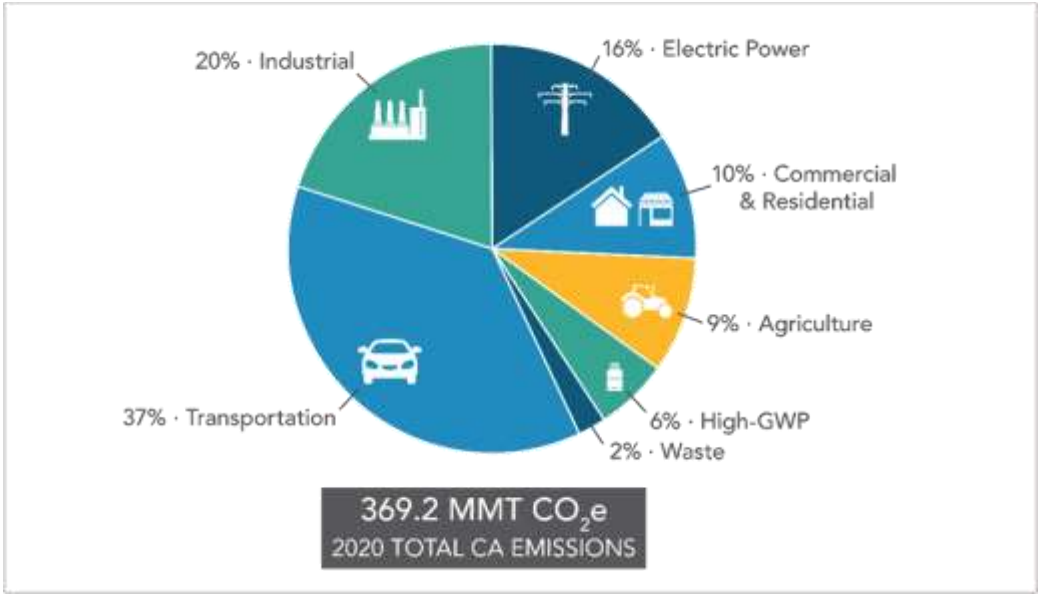

Figure 5. California 2020 GHG Emissions by Scoping Plan Category

(Source: CARB 2022a)

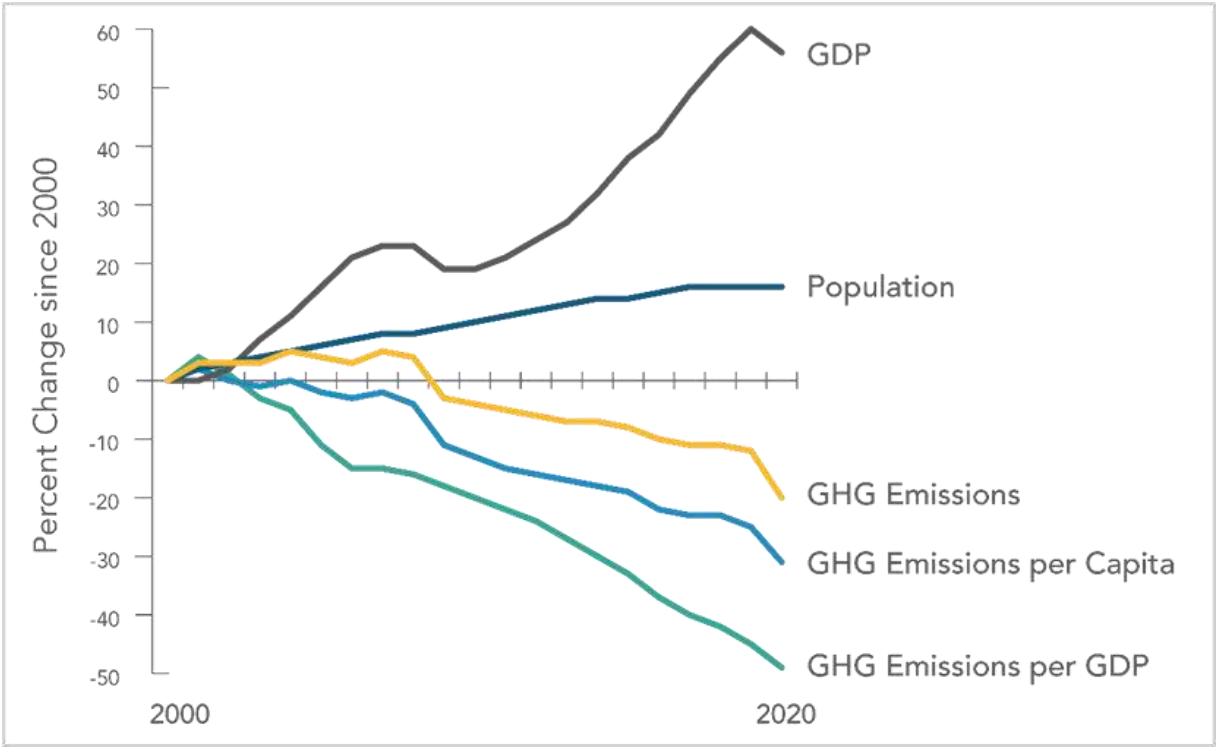

Figure 6. Change in California GDP, Population, and GHG Emissions since 2000

(Source: CARB 2022a)

AB 32 required the CARB to develop a Scoping Plan that describes the approach California will take to achieve the goal of reducing GHG emissions to 1990 levels by 2020, and to update it every 5 years. The CARB adopted the first scoping plan in 2008. The second updated plan, *California's 2017 Climate Change Scoping Plan*, adopted on December 14, 2017, reflects the 2030 target established in EO B-30-15 and SB 32. The draft *2022 Scoping Plan Update* additionally lays out a path to achieving carbon neutrality by 2045 (CARB 2022b).

REGIONAL PLANS

The CARB sets regional GHG reduction targets for California's 18 Metropolitan Planning Organizations (MPOs) to achieve through planning future projects that will cumulatively achieve those goals and reporting how they will be met in the Regional Transportation Plan/Sustainable Communities Strategy (RTP/SCS). Targets are set at a percent reduction of passenger vehicle GHG emissions per person from 2005 levels.

The project area is not within the jurisdiction of an MPO, and therefore not subject to CARB GHG reduction targets. However, the Humboldt County Association of Governments is the Regional Transportation Planning Agency for the project area. The 2022 RTP identifies short-term and long-term goals for GHG reduction strategies, matching the California Climate Strategy goals (County of Humboldt 2017 and 2022). Some of these goals include:

- Reduce countywide emissions by 40% of 1990 levels by 2030
- By 2035 have 100% zero-emission vehicle sales of passenger cars and trucks
- From 2030 to 2045, fully transition from fossil fuels to 100% renewable energy
- Make progress towards zero net greenhouse gas emissions by 2045
- By 2045 have statewide carbon neutrality and net-negative emissions thereafter
- By 2050 reduce GHG emissions to 80% below 1990 levels
- Improve accessibility of public transit
- Expand shared mobility
- Expand and increase safety of active transportation modes like walking and biking
- Make communities more compact and connected

The project would not conflict with any plan, policy, or regulation established for the reduction of GHG.

Project Analysis

GHG emissions from transportation projects can be divided into those produced during operation of the State Highway System (SHS) (operational emissions) and those produced during construction. The primary GHGs produced by the transportation sector are CO_2, CH_4, N_2O, and HFCs. CO_2 emissions are a product of burning gasoline or diesel fuel in internal combustion engines, along with relatively small amounts of CH_4 and N_2O. A small amount of HFC emissions related to refrigeration is also included in the transportation sector.

The CEQA Guidelines generally address greenhouse gas emissions as a cumulative impact due to the global nature of climate change (Public Resources Code § 21083(b)(2)). As the California Supreme Court explained, "because of the global scale of climate change, any one project's contribution is unlikely to be significant by itself." (Cleveland National Forest Foundation *v.* San Diego Assn. of Governments (2017) 3 Cal. 5th 497, 512).

In assessing cumulative impacts, it must be determined if a project's incremental effect is "cumulatively considerable" (CEQA Guidelines Sections 15064(h)(1) and 15130). To make this determination, the incremental impacts of the project must be compared with the effects of past, current, and probable future projects. Although climate change is ultimately a cumulative impact, not every individual project that emits greenhouse gases must necessarily be found to contribute to a significant cumulative impact on the environment.

Operational Emissions

The purpose of the proposed project is to improve drainage facilities along the US 101 corridor and would not increase the vehicle capacity of the roadway. This type of project generally causes minimal or no increase in operational GHG emissions. Because the project would not increase the number of travel lanes on US 101, no increase in vehicle miles traveled (VMT) would occur. While some GHG emissions during the construction period would be unavoidable, no increase in operational GHG emissions is expected.

Construction Emissions

Construction GHG emissions would result from material processing and transportation, on-site construction equipment, and traffic delays due to construction. These emissions would be produced at different levels throughout the construction phase; their frequency and occurrence can be reduced through innovations in plans and specifications and by implementing better traffic management during construction phases.

Use of long-life pavement, improved Transportation Management Plans, and changes in materials can also help offset emissions produced during construction by allowing longer intervals between maintenance and rehabilitation activities.

Construction is expected to begin in 2025 and last approximately 220 working days. The Caltrans Construction Emission Tool (CAL-CET 2021 v1.0) was used to estimate average carbon dioxide (CO_2), methane (CH_4), nitrous oxide (N_2O), and hydrofluorocarbons (HFCs) emissions from construction activities. Table 9 summarizes estimates of average GHG emissions generated by on-site equipment for the project. The average carbon dioxide equivalent (CO_2e) produced during construction is estimated to be approximately 1,057 U.S. tons (959 metric tons) over approximately 220 working days.

Table 9. Estimated Average Construction Emissions in U.S. Tons

Construction Duration	CO_2	CH_4	N_2O	HFCs	CO_2e*
220 working days	560	0.012	0.028	0.033	1,057.044

* A quantity of GHG is expressed as carbon dioxide equivalent (CO_2e) that can be estimated by the sum after multiplying each amount of CO_2, CH_4, N_2O, and HFCs by its global warming potential (GWP). Each GWP of CO_2, CH_4, N_2O, and HFCs is 1, 25, 298, and 14,800, respectively.

All construction contracts include Caltrans Standard Specifications related to air quality. Sections 7-1.02A and 7 1.02C, Emissions Reduction, requires contractors to comply with all laws applicable to the project and to certify they are aware of and will comply with all CARB emission reduction regulations. Section 14-9.02, Air Pollution Control, requires contractors to comply with all air pollution control rules, regulations, ordinances, and statutes. Certain common regulations (such as equipment idling restrictions) that reduce construction vehicle emissions also help reduce GHG emissions.

CEQA Conclusion

While the proposed project would result in GHG emissions during construction, it is anticipated the project will not result in any increase in operational GHG emissions. The proposed project does not conflict with any applicable plan, policy, or regulation adopted for the purpose of reducing the emissions of greenhouse gases. With implementation of construction GHG-reduction measures, the project is anticipated to have a ***"Less than Significant Impact"*** on greenhouse gas emissions. No mitigation would be required.

Caltrans is firmly committed to implementing measures to help reduce GHG emissions. These measures are outlined in the following section.

Greenhouse Gas Reduction Strategies

STATEWIDE EFFORTS

In response to AB 32, California is implementing measures to achieve emission reductions of GHGs that cause climate change. Climate change programs in California are effectively reducing GHG emissions from all sectors of the economy. These programs include regulations, market programs, and incentives that will transform transportation, industry, fuels, and other sectors to take California into a sustainable, low-carbon and cleaner future, while maintaining a robust economy (CARB 2022c).

Major sectors of the California economy, including transportation, will need to reduce emissions to meet 2030 and 2050 GHG emissions targets. The California Governor's Office of Planning and Research (OPR) identified five sustainability pillars in a 2015 report: (1) increasing the share of renewable energy in the State's energy mix to at least 50 percent by 2030; (2) reducing petroleum use by up to 50 percent by 2030; (3) increasing the energy efficiency of existing buildings by 50 percent by 2030; (4) reducing emissions of short-lived climate pollutants; and (5) stewarding natural resources, including forests, working lands, and wetlands, to ensure that they store carbon, are resilient, and enhance other environmental benefits (California Governor's OPR 2015). OPR later added strategies related to achieving statewide carbon neutrality by 2045 in accordance with EO B-55-18 and AB 1279 (California Governor's OPR 2022).

The transportation sector is integral to the people and economy of California. To achieve GHG emission reduction goals, it is vital the state build on past successes in reducing criteria and toxic air pollutants from transportation and goods movement. GHG emission reductions will come from cleaner vehicle technologies, lower-carbon fuels, and reduction of vehicle miles traveled (VMT). Reducing today's petroleum use in cars and trucks by 50% is a key state goal for reducing greenhouse gas emissions by 2030 (California Environmental Protection Agency 2015).

In addition, SB 1386 (Wolk 2016) established as state policy the protection and management of natural and working lands and requires state agencies to consider that policy in their own decision making. Trees and vegetation on forests, rangelands, farms, and wetlands remove carbon dioxide from the atmosphere through biological processes and sequester the carbon in above- and below-ground matter.

Subsequently, Governor Gavin Newsom issued Executive Order N-82-20 to combat the crises in climate change and biodiversity. It instructs state agencies to use existing authorities and resources to identify and implement near- and long-term actions to accelerate natural removal of carbon and build climate resilience in our forests, wetlands, urban greenspaces, agricultural soils, and land conservation activities in ways that serve all communities and in particular low-income, disadvantaged, and vulnerable communities. To support this order, the California Natural Resources Agency (2022a) released *Natural and Working Lands Climate Smart Strategy*, with a focus on nature-based solutions.

CALTRANS ACTIVITIES

Caltrans continues to be involved on the Governor's Climate Action Team as the CARB works to implement EOs S-3-05 and S-01-07 and help achieve the targets set forth in AB 32. EO B-30-15, issued in April 2015, and SB 32 (2016) set an interim target to cut GHG emissions to 40% below 1990 levels by 2030. The following major initiatives are underway at Caltrans to help meet these targets.

Climate Action Plan for Transportation Infrastructure

The California Action Plan for Transportation Infrastructure (CAPTI) builds on executive orders signed by Governor Newsom in 2019 and 2020 targeted at reducing GHG emissions in transportation, which account for more than 40 percent of all polluting emissions, to reach the state's climate goals. Under CAPTI, where feasible and within existing funding program structures, the state will invest discretionary transportation funds in sustainable infrastructure projects that align with its climate, health, and social equity goals (California State Transportation Agency 2021).

California Transportation Plan

The *California Transportation Plan* (CTP) is a statewide, long-range transportation plan to meet our future mobility needs and reduce GHG emissions. It serves as an umbrella document for all the other statewide transportation planning documents. The *CTP 2050* presents a vision of a safe, resilient, and universally accessible transportation system that supports vibrant communities, advances racial and economic justice, and improves public and environmental health. The plan's climate goal is to achieve statewide GHG emissions reduction targets and increase resilience to climate change. It demonstrates how GHG emissions from the transportation sector can be reduced through advancements in clean fuel technologies; continued shifts toward active travel, transit, and shared mobility; more

efficient land use and development practices; and continued shifts to telework (Caltrans 2021a).

Caltrans Strategic Plan

The *Caltrans 2020–2024 Strategic Plan* includes goals of stewardship, climate action, and equity. Climate action strategies include developing and implementing a Caltrans Climate Action Plan; a robust program of climate action education, training, and outreach; partnership and collaboration; a VMT monitoring and reduction program; and engaging with the most vulnerable communities in developing and implementing Caltrans climate action activities (Caltrans 2021b).

Caltrans Policy Directives And Other Initiates

Caltrans Director's Policy 30 (DP-30) Climate Change (June 22, 2012) established a Department policy to ensure coordinated efforts to incorporate climate change into Departmental decisions and activities. *Caltrans Greenhouse Gas Emissions and Mitigation Report* (Caltrans 2020) provides a comprehensive overview of Caltrans' emissions. The report documents and evaluates current Caltrans procedures and activities that track and reduce GHG emissions and identifies additional opportunities for further reducing GHG emissions from Department-controlled emission sources, in support of Departmental and State goals.

Project-Level GHG Reduction Strategies

The following measures will also be implemented in the project to reduce GHG emissions and potential climate change impacts from the project.

- Caltrans Standard Specification "Air Quality" requires compliance by the contractor with all applicable laws and regulations related to air quality.
- Compliance with Title 13 of the California Code of Regulations, which includes restricting idling of diesel-fueled commercial motor vehicles and equipment with gross weight ratings of greater than 10,000 pounds to no more than 5 minutes.
- Caltrans Standard Specification "Emissions Reduction" ensures that construction activities adhere to the most recent emissions reduction regulations mandated by the California Air Resources Board (CARB).

- Use of a Transportation Management Plan (TMP) to minimize vehicle delays and idling emissions. As part of this, construction traffic would be scheduled and routed to reduce congestion and related air quality impacts caused by idling vehicles along the highway during peak travel times.
- All areas temporarily disturbed during construction would be revegetated with appropriate native species. Landscaping reduces surface warming and, through photosynthesis, decreases CO_2. This replanting would help offset any potential CO_2 emissions increase.
- Pedestrian and bicycle access would be maintained on U.S. Highway 101 during project activities.
- Where feasible, the removal of established trees and vegetation would be minimized. Environmentally sensitive areas would have Temporary High Visibility Fencing (THVF) installed before start of construction to demarcate areas where vegetation would be preserved and root systems of trees protected.
- Temporary access roads, construction easements, and staging areas that were previously vegetated would be restored to a natural contour and revegetated with regionally-appropriate native vegetation.
- A Revegetation Plan would be prepared which would include a plant palette, establishment period, watering regimen, monitoring requirements, and pest control measures. The Revegetation Plan would also address measures for wetland and riparian areas temporarily impacted by the project.

In addition to the above-listed standard measures, the project would implement the following:

- For improved fuel efficiency from construction equipment:
    - Maintain equipment in proper tune and working condition.
    - Use right sized equipment for the job.
    - Use equipment with new technologies.
- Earthwork Balance: reduce the need for transport of earthen materials by balancing cut and fill quantities.
- Maximize use of recycled materials (tire rubber for example) as feasible.

- Salvage large, removed trees for lumber or similar on-site beneficial uses other than standard wood-chipping (e.g., use in roadside landscape projects or green infrastructure components).
- Use recycled water or reduce consumption of potable water for construction.

Adaptation Strategies

Reducing GHG emissions is only one part of an approach to addressing climate change. Caltrans must plan for the effects of climate change on the state's transportation infrastructure and strengthen or protect the facilities from damage. Climate change is expected to produce increased variability in precipitation, rising temperatures, rising sea levels, variability in storm surges and their intensity, and in the frequency and intensity of wildfires. Flooding and erosion can damage or wash out roads; longer periods of intense heat can buckle pavement and railroad tracks; storm surges combined with a rising sea level can inundate highways. Wildfire can directly burn facilities and indirectly cause damage when rain falls on denuded slopes that landslide after a fire. Effects will vary by location and may, in the most extreme cases, require that a facility be relocated or redesigned. Accordingly, Caltrans must consider these types of climate stressors in how highways are planned, designed, built, operated, and maintained.

FEDERAL EFFORTS

Under NEPA Assignment, Caltrans is obligated to comply with all applicable federal environmental laws and FHWA NEPA regulations, policies, and guidance.

The *Fourth National Climate Assessment*, published in 2018, presents the foundational science and the "human welfare, societal, and environmental elements of climate change and variability for 10 regions and 18 national topics, with particular attention paid to observed and projected risks, impacts, consideration of risk reduction, and implications under different mitigation pathways."

The *U.S. DOT Policy Statement on Climate Adaptation* in June 2011 committed the federal Department of Transportation to "integrate consideration of climate change impacts and adaptation into the planning, operations, policies, and programs of DOT in order to ensure that taxpayer resources are invested wisely, and that transportation infrastructure, services and operations remain effective in current and future climate conditions" (U.S. DOT 2011).

The *U.S. DOT Climate Action Plan of August 2021* followed up with a statement of policy to "accelerate reductions in greenhouse gas emissions from the transportation sector and make our transportation infrastructure more climate change resilient now and in the future," following this set of guiding principles (U.S. DOT 2021):

- Use best-available science
- Prioritize the most vulnerable
- Preserve ecosystems
- Build community relationships
- Engage globally

U.S. DOT developed its climate action plan pursuant to the federal EO 14008, *Tackling the Climate Crisis at Home and Abroad* (January 27, 2021). EO 14008 recognized the threats of climate change to national security and ordered federal government agencies to prioritize actions on climate adaptation and resilience in their programs and investments (White House 2021).

FHWA Order 5520 (*Transportation System Preparedness and Resilience to Climate Change and Extreme Weather Events*, December 15, 2014) established FHWA policy to strive to identify the risks of climate change and extreme weather events to current and planned transportation systems. FHWA has developed guidance and tools for transportation planning that foster resilience to climate effects and sustainability at the federal, state, and local levels (FHWA 2019).

STATE EFFORTS

Climate change adaptation for transportation infrastructure involves long-term planning and risk management to address vulnerabilities in the transportation system. A number of state policies and tools have been developed to guide adaptation efforts.

California's Fourth Climate Change Assessment (Fourth Assessment) (2018) is the state's effort to "translate the state of climate science into useful information for action." It provides information that will help decision makers across sectors and at state, regional, and local scales protect and build the resilience of the state's people, infrastructure, natural systems, working lands, and waters. The State's approach recognizes that the consequences of climate change occur at the intersections of people, nature, and infrastructure. *The Fourth Assessment* reports that if no measures are taken to reduce GHG emissions by 2021 or sooner, the state is projected to experience a 2.7 to 8.8 degrees Fahrenheit increase in average

annual maximum daily temperatures, with impacts on agriculture, energy demand, natural systems, and public health; a two-thirds decline in water supply from snowpack and water shortages that will impact agricultural production; a 77% increase in average area burned by wildfire, with consequences for forest health and communities; and large-scale erosion of up to 67% of Southern California beaches and inundation of billions of dollars' worth of residential and commercial buildings due to sea level rise (State of California 2018).

Sea level rise is a particular concern for transportation infrastructure within the Coastal Zone. Major urban airports will be at risk of flooding from sea level rise combined with storm surge as early as 2040; San Francisco airport is already at risk. Miles of coastal highways vulnerable to flooding in a 100-year storm event will triple to 370 by 2100, and 3,750 miles will be exposed to temporary flooding. The *Fourth Assessment's* findings highlight the need for proactive action to address these current and future impacts of climate change.

In 2008, then-governor Arnold Schwarzenegger recognized the need when he issued EO S-13-08, focused on sea level rise. Technical reports on the latest sea level rise science were first published in 2010 and updated in 2013 and 2017. The 2017 projections of sea level rise and new understanding of processes and potential impacts in California were incorporated into the *State of California Sea-Level Rise Guidance Update* in 2018. This EO also gave rise to the *California Climate Adaptation Strategy* (2009), updated in 2014 as *Safeguarding California: Reducing Climate Risk (Safeguarding California Plan*), which addressed the full range of climate change impacts and recommended adaptation strategies. The *Safeguarding California Plan* was updated in 2018 and again in 2021 as the *California Climate Adaptation Strategy*, incorporating key elements of the latest sector-specific plans such as the *Natural and Working Lands Climate Smart Strategy*, *Wildfire and Forest Resilience Action Plan*, *Water Resilience Portfolio*, and the *CAPTI* (described above). Priorities in the 2021 *California Climate Adaptation Strategy* include acting in partnership with California Native American Tribes, strengthening protections for climate-vulnerable communities that lack capacity and resources, nature-based climate solutions, use of best available climate science, and partnering and collaboration to best leverage resources (California Natural Resources Agency 2022b).

EO B 30 15, signed in April 2015, requires state agencies to factor climate change into all planning and investment decisions. This EO recognizes that effects of climate change, in addition to sea level rise, also threaten California's infrastructure. At the direction of EO B-30-15, the Office of Planning and Research published *Planning and Investing for a*

Resilient California: A Guidebook for State Agencies in 2017, to encourage a uniform and systematic approach.

AB 2800 (Quirk 2016) created the multidisciplinary Climate-Safe Infrastructure Working Group to help actors throughout the state address the findings of California's *Fourth Climate Change Assessment*. It released its report, *Paying it Forward: The Path Toward Climate-Safe Infrastructure in California*, in 2018. The report provides guidance to agencies on how to address the challenges of assessing risk in the face of inherent uncertainties still posed by the best available science on climate change. It also examines how state agencies can use infrastructure planning, design, and implementation processes to address the observed and anticipated climate change impacts (Climate Change Infrastructure Working Group 2018).

CALTRANS ADAPTATION EFFORTS

Caltrans Vulnerability Assessments

Caltrans completed climate change vulnerability assessments to identify segments of the State Highway System vulnerable to climate change effects of precipitation, temperature, wildfire, storm surge, and sea level rise.

The climate change data in the assessments were developed in coordination with climate change scientists and experts at federal, state, and regional organizations at the forefront of climate science. The findings of the vulnerability assessments guide analysis of at-risk assets and development of Adaptation Priority Reports as a method to make capital programming decisions to address identified risks.

Project Adaptation Analysis

The project would not exacerbate the effects of climate change related to CEQA topics. However, the proposed project would include certain elements to prepare for increased precipitation, increased risk of wildfire, and hazards that may result from climate change, such as flooding, landslides, and road closures (Caltrans 2019). The intended design life of APC and downdrains is 50 years and 25 years, respectively (Caltrans 2022i).

Sea Level Rise

All drainage systems within the project study area are outside the Coastal Zone and, according to the NOAA Sea Level Rise Viewer, are not in areas subject to sea level rise. The northernmost portion of the project, depicted in Figure 7, is 12.88 miles from the coast and is demonstrated to be outside the risk of sea level rise. Accordingly, direct impacts to transportation facilities due to projected sea level rise are not expected.

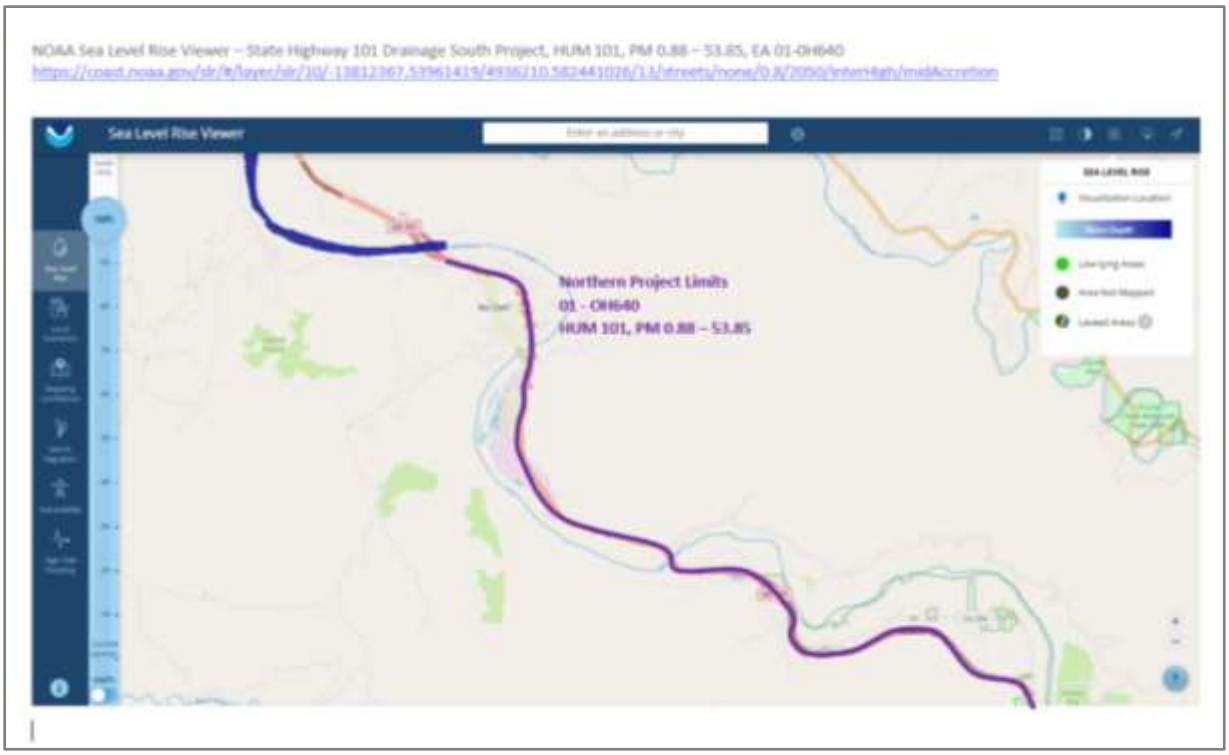

Figure 7. Projected Sea Level Rise at Northern Project Limits

Precipitation and Flooding

The 100-year flood event is commonly used in the sizing and design of culverts and drainage systems. In most cases, it is assumed that the 100-year flood is caused by a 100-year precipitation event. In 2019, the *Caltrans Climate Change Vulnerability Assessment for District 1* (Caltrans 2019) mapped potential changes in the 100-year precipitation event throughout the district. The projections are based on the Representative Concentration

Pathways (RCP) 8.5 Emissions Scenario[3]. The mapping indicates a percentage increase of 5.0% in 2055 and 9.9% in 2085 in the 100-year flood within the project area as a result of climate change (Caltrans 2019). Although runoff and streamflow are proportional to precipitation, a given frequency precipitation event does not always produce the same frequency streamflow (flood) event. Regardless, without extensive data on each watershed, the precipitation frequency is a good proxy for streamflow for a given drainage. A *Floodplain Evaluation Report Summary* was prepared for the project (Caltrans 2022j). The proposed project lies on rolling and hilly terrain on US 101 along the South Fork River and mainstem Eel River in Humboldt County. Portions of US 101 within the project area are within the Department of Water Resources Awareness Floodplain maps. This project spans Flood Insurance Rate Map (FIRM) panels 06045C0075F (effective 6/2/2011), 06023C1850F, 06023C1675F, 06023C1650F, 06023C1465F, 06023C1465F, 06023C1470F, 06023C1470F, 06023C1430F, and 06023C1240F, all effective 11/4/2016.

Of the flood zones classified as High Hazard Levels (A and AE), there are 12 sites in total. Of these, 4 sites are in Zone A, a flood zone with no determined Base Flood Elevation (BFE) or depth. One site is designated within Zone AE, a Special Flood Hazard Area with a determined BFE. The remaining 7 sites are designated within Zones AE/D. In the flood zones classified as Moderate to Low Hazard, 20 of the 37 sites are designated by Federal Emergency Management Agency (FEMA) within Unshaded Zone X, an "Area of Minimal Flood Hazard." These are areas outside the Special Flood Hazard Area, and higher than the elevation of the 0.2-percent-annual-chance (500 year) flood (Caltrans 2022j). The 6 remaining sites are designated within Flood Zone D, an "Area of Undetermined Flood Hazard."

Although many of the drainage systems are within special flood hazard zones, the proposed work would not create new impacts to the floodplain or longitudinally encroach upon the base floodplain. Any encroachment of the drainage systems within the base floodplain are improvements to existing facilities at discrete locations with negligible impacts, where the goal is to reduce flooding and erosion potential. The majority of culverts would be replaced with larger diameter culverts. Because the lifespan of culverts can be 50 years or more, this process of upsizing culverts would help prepare the roadway for increased flows that may occur due to future precipitation increases, while also decreasing water velocities at culvert

[3] RCPs represent the most recent generation of GHG scenarios produced by the IPCC. RCP 8.5 assumes that high GHG emissions will continue to the end of the century.

outlets, which could decrease downstream erosion. The project is also proposing RSP at most locations to reduce erosion during extreme flows. Project work would also stabilize slopes to lower the chances of landslide on slopes at risk of more frequent or intense wildfire and precipitation. The purpose of this project is to improve drainage systems to reduce risk of localized flooding. Accordingly, the project would be resilient to future increases in precipitation and flooding.

Wildfire

The project site is located within both a Local Responsibility Area (LRA) and a State Responsibility Area (SRA) (Figure 8). Within the SRA, the project is located within the *Moderate* and *High* Fire Hazard Severity Zones (FHSZ) (California Department of Forestry and Fire Protection [CAL FIRE] 2021).

The *Caltrans Climate Change Vulnerability Assessment for District* 1 (Caltrans 2019) identifies US 101 within the project site as having a medium level of concern for wildfire exposure. The projections are based on the Representative Concentration Pathways (RCP) 8.5 Emissions Scenario (Caltrans 2019). By 2085 the project area is projected to be in areas with a medium to high level of concern for wildfire exposure (Caltrans 2019). While average temperatures on the coast are currently relatively mild, changes in precipitation due to climate change are projected to result in more frequent drought periods and storm events, producing heavier rainfall and leading to an increase in fuels in already fire prone locations. Replacing culverts that have exceeded their design life is expected to reduce the risk of slope instability if a wildfire were to leave areas with steep slopes exposed.

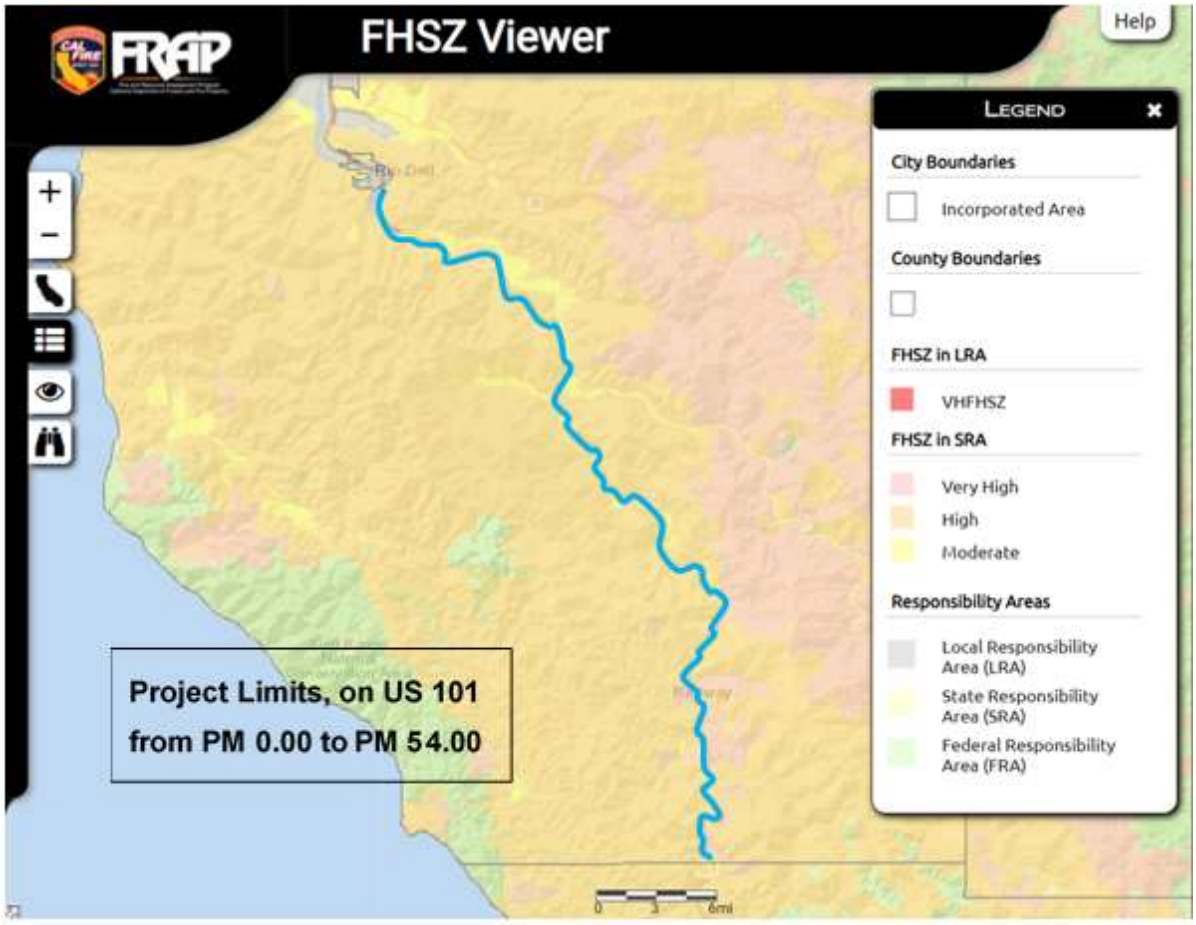

Figure 8. Fire Hazard Severity Zone Map

Standard fire prevention measures would be implemented during construction, including:

- The names and emergency telephone numbers of the nearest fire suppression agencies would be posted at a prominent place at the job site.
- A Fire Prevention Plan would be required from the contractor to identify measures taken to reduce the risk of fire.
- Fires occurring within and near the project limits would be immediately reported to the nearest fire suppression agency by using the emergency phone numbers retained at the job site and by dialing 911. Performance of the work would be in cooperation with fire prevention authorities.
- Fires caused directly or indirectly by job site activities would be extinguished and escape of fires would be prevented.

- Materials resulting from clearing and grubbing would be disposed of or managed to prevent accumulation of flammable material.
- All emergency response agencies in the project area would be notified of the project construction schedule and would have access to U.S. Highway 101 throughout the construction period.
- Standard Special Provision 7-1.02M(2) includes a list of fire prevention procedures that would be required by the contractor during construction.

These measures would minimize wildfire risk during construction. It is a policy of District 1 to avoid exposing plastic pipe to fire hazard, therefore culverts would be made of corrugated steel pipe. The project would upgrade existing infrastructure and would not result in changes to the highway facilities or environment that could exacerbate fire risk.

Temperature

Temperature affects choice of pavement materials and pavement condition, which could require more frequent maintenance. While the District Climate Change Vulnerability Assessment indicates substantial maximum temperature changes are expected over the project design life, no adaptive changes in pavement design or maintenance practices are needed due to current pavement binder specifications being within the appropriate range.

2.9 Hazards and Hazardous Materials

Question	Significant and Unavoidable Impact	Less Than Significant with Mitigation Incorporated	Less Than Significant Impact	No Impact
Would the project: a) Create a significant hazard to the public or the environment through the routine transport, use, or disposal of hazardous materials?				✓
Would the project: b) Create a significant hazard to the public or the environment through reasonably foreseeable upset and accident conditions involving the release of hazardous materials into the environment?				✓
Would the project: c) Emit hazardous emissions or handle hazardous or acutely hazardous materials, substances, or waste within one-quarter mile of an existing or proposed school?				✓
Would the project: d) Be located on a site which is included on a list of hazardous materials sites compiled pursuant to Government Code Section 65962.5 and, as a result, would it create a significant hazard to the public or the environment?				✓
Would the project: e) For a project located within an airport land use plan or, where such a plan has not been adopted, within two miles of a public airport or public use airport, would the project result in a safety hazard or excessive noise for people residing or working in the project area?				✓

Question	Significant and Unavoidable Impact	Less Than Significant with Mitigation Incorporated	Less Than Significant Impact	No Impact
Would the project: f) Impair implementation of or physically interfere with an adopted emergency response plan or emergency evacuation plan?				✓
Would the project: g) Expose people or structures, either directly or indirectly, to a significant risk of loss, injury or death involving wildland fires?				✓

"No Impact" determinations in this section are based on the scope, description, and location of the proposed project, as well as the Initial Site Assessment (Update) dated May 6, 2021 (Caltrans 2021c). Potential hazards and impacts from hazardous materials are not anticipated because the project would not create a significant hazard to the public or environment, is not located near a school or airport, and is not on a list of hazardous sites compiled pursuant to Government Code Section 65962.5 (Cortese List). Emergency vehicles would be accommodated through any temporary ramp or lane closures. If a wildland fire affected the area, work would stop and evacuation routes would be accessible. Caltrans specifications require the management of hazardous materials to comply with applicable laws, rules, and regulations. If encountered, Aerially Deposited Lead, commonly found in unpaved areas around the highway, and treated wood waste from potential guardrail replacement, would be handled and disposed of in accordance with Caltrans standard specifications for these materials. Best Management Practices would be used on-site to contain hazardous materials should they be encountered and avoid exposure to workers, the public, and surrounding environment.

Given the above, the project is anticipated to have ***"No Impact"*** to hazards and hazardous materials. No mitigation would be required.

2.10 Hydrology and Water Quality

Question	Significant and Unavoidable Impact	Less Than Significant with Mitigation Incorporated	Less Than Significant Impact	No Impact
Would the project: a) Violate any water quality standards or waste discharge requirements or otherwise substantially degrade surface or ground water quality?			✓	
Would the project: b) Substantially decrease groundwater supplies or interfere substantially with groundwater recharge such that the project may impede sustainable groundwater management of the basin?				✓
Would the project: c) Substantially alter the existing drainage pattern of the site or area, including through the alteration of the course of a stream or river or through the addition of impervious surfaces, in a manner which would: (i) result in substantial erosion or siltation on- or off-site;				✓
(ii) substantially increase the rate or amount of surface runoff in a manner which would result in flooding on- or offsite;				✓
(iii) create or contribute runoff water which would exceed the capacity of existing or planned stormwater drainage systems or provide substantial additional sources of polluted runoff; or				✓
(iv) impede or redirect flood flows?				✓

Question	Significant and Unavoidable Impact	Less Than Significant with Mitigation Incorporated	Less Than Significant Impact	No Impact
Would the project: d) In flood hazard, tsunami, or seiche zones, risk release of pollutants due to project inundation?				✓
Would the project: e) Conflict with or obstruct implementation of a water quality control plan or sustainable groundwater management plan?				✓

Regulatory Setting

The primary laws and regulations governing hydrology and water quality include:

- Federal: Clean Water Act (CWA)–33 USC 1344
- Federal: Executive Order for the Protection of Wetlands–EO 11990
- State: California Fish and Game Code (CFGC)–Sections 1600–1607
- State: Porter-Cologne Water Quality Control Act–Section 13000 et seq.

The U.S. EPA enforces regulations that require the establishment of Total Maximum Daily Loads (TMDLs) for CWA Section 303(d) waterbodies to attain and maintain water quality standards. The overall goal of establishing a TMDL is to ensure that all "beneficial uses" are protected and water quality objectives are met. Water quality objectives and beneficial uses are identified for all water bodies in the North Coast Region in the Water Quality Control Plan for the North Coast Region (Basin Plan).

Environmental Setting

A Water Quality Assessment Report (WQAR) was prepared for the project in June 2022 (Caltrans 2022j) and is used to describe the environmental setting.

Hydrology

The proposed project is located entirely within the Eel River basin, starting with the roadway alignment along the South Fork Eel River and ending along the mainstem of the Eel River near Rio Dell. The surrounding terrain is hilly to mountainous with steep forested slopes with the highway generally following the course of the South Fork Eel River and Eel River. While most of the roadway is on or very near the South Fork or mainstem Eel River floodplain or floodplain terraces, the alignment does traverse hills and ridges hundreds of feet above the Eel River valley floor, topping out at an elevation just over 700 feet in the Garberville-Benbow area. Most contributing drainage areas (watersheds) to the project culverts are in steep terrain which results in shorter time of concentrations and streamflow response times. The Eel River watershed and most of the project drainages are rural and are predominantly covered in forest and woodland.

The project is within the Eel River Hydrologic Unit (HU), South Fork Eel River and Lower Eel River Hydrologic Areas (HAs), and the Benbow, Weott, Scotia, and Ferndale Hydrologic Subareas (HSAs). The project discharges directly to the South Fork Eel River and Eel River.

Based on the general topography of the project area, runoff from the project directly and indirectly discharges into tributaries of the South Fork Eel River or Eel River. The South Fork Eel River flows north to northwest and discharges into the Eel River near PM 20.88. The Eel River then flows northwest and discharges into the Pacific Ocean approximately 13.5 miles northwest from PM 54.0.

Water Quality

Table 10 lists the following beneficial uses for surface waters within the South Fork Eel River and Lower Eel River Hydrologic Areas and Benbow, Weott, Scotia and Ferndale Hydrologic Subareas.

Table 10. Beneficial Uses of Surface Waters in the Project Area

Beneficial Use	South Fork Eel River Hydrologic Area, Benbow and Weott HSAs	Lower Eel River Hydrologic Area, Scotia and Ferndale HSAs
Municipal and domestic supply (MUN)	Existing	Existing
Agricultural supply (AGR)	Existing	Existing
Industrial service supply (IND)	Existing	Existing
Groundwater recharge (GWR)	Existing	Existing
Freshwater replenishment (FRSH)	Existing	Existing
Navigation (NAV)	Existing	Existing
Water contact recreation (REC-1)	Existing	Existing
Non-contact water recreation (REC-2)	Existing	Existing
Commercial and sport fishing (COMM)	Existing	Existing
Warm freshwater habitat (WARM)	Existing	-
Cold freshwater habitat (COLD)	Existing	Existing
Wildlife habitat (WILD)	Existing	Existing
Rare, threatened, or endangered species (RARE)	Existing	Existing
Migration of aquatic organisms (MIGR)	Existing	Existing
Spawning, reproduction, and/or early development (SPWN)	Existing	Existing
Industrial Process Supply (PRO)	Potential	Potential
Hydropower generation (POW)	Potential	Potential
Aquaculture (AQUA)	Potential	Potential
Shellfish harvesting (SHELL)	-	Existing - Ferndale HSA only
Estuarine habitat (EST)	-	Existing - Ferndale HSA only
Native American culture (CUL)	-	Existing - Ferndale HSA only
Marine habitat (MAR)	-	Potential – Ferndale HSA only

The State Water Resources Control Board (SWRCB) 2018 California Integrated Report lists the Eel River HU, South Fork HA as being impaired for aluminum, sedimentation/siltation, total dissolved solids, and water temperature. The TMDLs for aluminum and total dissolved solids both have a scheduled TMDL completion date of 2031. The sources of the aluminum and total dissolved solids impairments are unknown. Per the U.S. EPAs 1999 South Fork Eel River TMDL for Sediment and Temperature, the sources of the sediment/siltation are roads, skid trails, and timber harvest. Removal of riparian vegetation (loss of large shade trees) and widening of streams (as caused by sediment/siltation) are cited as causes of increased temperature in the South Fork Eel River.

The South Fork Eel River TMDL for Sediment and Temperature was approved by the U.S. EPA in 1999, and the TMDL Implementation Policy Statement for Sediment-Impaired Receiving Waters in the North Coast Region was approved by the NCRWQCB under Resolution R1-2004-0087. The Caltrans Municipal Separate Storm Sewer System (MS4) Permit states that the U.S. EPA has not assigned waste load allocations to discharges from Caltrans facilities related to the South Fork Eel River watershed TMDL.

The SWRCB 2018 California Integrated Report also lists the Eel River HU, Lower Eel River HA as impaired for aluminum, dissolved oxygen, sedimentation/siltation, and water temperature. The TMDL for aluminum has a scheduled TMDL completion date of 2025, and the TMDL for dissolved oxygen has a scheduled TMDL completion date of 2021 but is not yet complete. The sources of the aluminum and dissolved oxygen impairments are unknown. The sedimentation/siltation TMDL identifies diffuse permitted point sources and non-point sources of sediment. Construction sites and Caltrans facilities (including roads) are diffuse, permitted point sources of sediment and are expected to generate and deliver sediment at rates that are similar to nonpoint sources.

The sedimentation/siltation and water temperature TMDLs were approved by the U.S. EPA in 2007, under the Lower Eel River TMDLs for Temperature and Sediment. The Caltrans MS4 Permit identifies general requirements for TMDLs and specific TMDL control requirements for temperature and sediment. The Caltrans MS4 permit further states that the U.S. EPA has assigned waste load allocations for the sediment TMDL to discharges from Caltrans facilities related to the Lower Eel River watershed. Per the Caltrans MS4 permit, the final sediment waste load allocation is equivalent to the load allocation. Per the Caltrans MS4 Permit, the temperature waste load allocation specific to Caltrans and other point source dischargers is zero net increase in receiving water temperature.

Discussion of CEQA Environmental Checklist Question 2.10—Hydrology and Water Quality

A "***No Impact***" determination was made for Questions b), c), d), and e) listed within the CEQA Environmental Checklist—Hydrology and Water Quality section.

A "***Less Than Significant Impact***" determination was made for Question a). Determinations were based on scope, description, and locations of the proposed project, as well as the Water Quality Assessment Report for HUM 101 Drainage South Project dated June 2022 (Caltrans 2022j), Floodplain Evaluation Report Summary (undated) (Caltrans 2022k), and 0-Phase Hydraulic Recommendations for the project dated July 19, 2022 (Caltrans 2022l).

a) Would the project violate any water quality standards or waste discharge requirements or otherwise substantially degrade surface or ground water quality?

The project would involve replacing and upsizing culverts, repairing ditches and paved aprons with hot mix asphalt, stabilizing embankments, and replacing headwalls and end walls. Construction would involve clearing and grubbing, importing fill material for site grading, constructing temporary access roads, excavating for the culvert work, preparing staging areas, and removing vegetation. These activities have the potential to create short- and long-term impacts to downstream water quality.

Groundwater may be minimally and temporarily impacted during construction. Dewatering would be incorporated as a project feature as necessary, and clean groundwater would be used as dust control, disposed in an upland area, or transported to a publicly owned treatment works facility.

The project is anticipated to disturb more than one acre of soil, therefore a Stormwater Pollution Prevention Plan (SWPPP) would be implemented to comply with the provisions of the Construction General Permit. Potential temporary impacts to water quality would be addressed by implementing standard BMPs recommended for a particular construction activity. The temporary control BMPs necessary to address stormwater impacts and protect water quality include soil stabilization, sediment control, tracking control, non-stormwater management, job site management, and waste management and materials pollution control. Further evaluation of the Disturbed Soil Area and necessary BMPs would be detailed during the Plans, Specifications, and Estimate (PS&E) phase of the project. During construction, the contractor would be required to describe in the SWPPP the in-field implementation of proposed BMPs and amend the document as necessary to match field conditions and phasing of the project to minimize potentially negative effects of construction on stormwater.

Suspended Particulates (Turbidity)

Temporary, short-term increases in turbidity to receiving waters could occur during construction. Soil erosion, especially during heavy rainfall, can increase the suspended solids, dissolved solids, and organic pollutants in stormwater runoff generated within the project limits. The potential for turbidity impacts is specifically of concern from construction-related activities, especially on culverts that require a clear water diversion system and construction of access roads and work areas. These conditions would persist until the completion of construction activities as well as implementation of long-term erosion

control measures and the proposed permanent structures. Routinely used project features (temporary BMPs) are included to protect water quality from turbidity impacts.

The project does not propose to add any impervious area; therefore, permanent impacts related to increased turbidity would be minimal or negligible. Work areas and access roads constructed for the project would be stabilized and revegetated. Any permanent impacts would be addressed by standard measures and other permanent project features.

Oil, Grease, and Chemical Pollutants

During construction, there is the potential for accidental releases of oil, grease, wash water, solvents, cement, sanitary wastes (which could be seen as visible film, coating on the surface, or floating material), and other construction materials to receiving waters. Materials and wastes could be tracked off-site by vehicles, deposited onto roads, and eventually picked up and transported into waterways. Temporary impacts to water quality could occur during roadway and retaining wall construction, culvert replacements, dewatering, excavation, saw cutting, and waste management. Routinely used project features (temporary BMPs) to protect water quality are included.

Temperature and Dissolved Oxygen

Tree and vegetation removal is proposed within the project to construct access roads. Removal of trees and vegetation can potentially cause a reduction in shade to adjacent water features, temporarily increasing temperature and decreasing dissolved oxygen levels. Existing native vegetation would be preserved to the maximum extent practicable. The implementation of project features promotes slope stabilization and re-establishment of vegetation in areas disturbed by the project. Revegetation efforts would be further discussed in the Natural Environment Study prepared for the project (Caltrans 2022c) and would be in compliance with the regulatory permits obtained for the project prior to construction.

Temporary, short-term increases in temperature and decreases in dissolved oxygen in receiving waters could occur during construction. Soil erosion, especially during heavy rainfall, can increase the suspended solids, dissolved solids, and organic pollutants in stormwater runoff generated within the project limits. The increase in pollutants could then increase the temperature and decrease the dissolved oxygen levels in the Eel River. These conditions would persist until the completion of construction activities as well as implementation of long-term erosion control measures and the proposed permanent structures. Routinely used project features (temporary BMPs) are included to protect water quality from temperature and dissolved oxygen impacts (Section 1.4).

Potential permanent impacts related to increased temperature and decreased dissolved oxygen may result from fill material, exposed culverts, and removal of riparian vegetation. These permanent impacts would be minimal and would be addressed by implementation of standard erosion control practices and other permanent project features (such as revegetation efforts discussed above).

The project does not propose any activities or uses likely to permanently degrade water quality. Future uses must comply with all local and regional water quality standards.

Erosion and Accretion Patterns

Temporary increases in suspended particulates and turbidity during storm events may occur due to disturbed soil in close proximity to receiving water bodies. Any potential short-term impacts would be addressed using various construction site project features (temporary BMPs). The project involves alterations of existing drainage features, which may affect natural erosion and accretion patterns. Permanent impacts to erosion and accretion patterns from the project are anticipated to be minimal with the implementation of standard erosion control practices, specifications, and other measures identified in Section 1.4.

Baseflow

Dewatering during construction may be necessary in areas where groundwater is encountered during excavation. It is estimated that dewatering may be required at 8 locations and, as a result, the project has the potential to temporarily alter baseflow. Temporary impacts due to dewatering would be minimal and limited to the construction period. Routinely used project features, such as practices that manage the discharge of pollutants during dewatering and clear water diversion, would be implemented to protect water quality. Work at these locations would require a LSAA from CDFW, providing additional assurance of protecting short and long-term water quality from dewatering.

NCRWQCB Order No. R1-2015-0003, General NPDES No. CAG0024902, and Waste Discharge Requirements for Low Threat Discharges to Surface Waters in the North Coast Region cover construction groundwater dewatering of low threat, planned, short-term discharge of groundwater provided that (1) the discharge does not contain pollutant quantities that could adversely affect beneficial uses and (2) the discharge meets specific criteria listed in the Basin Plan. If it is proposed that the project would discharge to receiving waters during potential dewatering operations, Caltrans would obtain approval from the NCRWQCB as stated in Caltrans' *Field Guide to Construction Site Dewatering* (Caltrans 2014).

Based on the reasons discussed above, Caltrans anticipates the potential for the project to violate any water quality standards or waste discharge requirements or to otherwise substantially degrade surface or ground water to be ***"Less than Significant."*** No mitigation would be required.

b) Would the project substantially decrease groundwater supplies or interfere substantially with groundwater recharge such that the project may impede sustainable groundwater management of the basin?

Due to the scope of the project, potential adverse impacts to groundwater supplies and groundwater recharge are not anticipated. The project is anticipated to have ***"No Impact"*** on groundwater. No mitigation would be required.

c) Would the project substantially alter the existing drainage pattern of the site or area, including through the alteration of the course of a stream or river or through the addition of impervious surfaces, in a manner which would:

(i) result in substantial erosion or siltation on- or off-site?

(ii) substantially increase the rate or amount of surface runoff in a manner which would result in flooding on- or off-site?

(iii) create or contribute runoff water which would exceed the capacity of existing or planned stormwater drainage systems or provide substantial additional sources of polluted runoff?

(iv) impede or redirect flood flows?

A *Floodplain Evaluation Report Summary* (Caltrans 2022j) and *0-Phase Hydraulic Recommendations* (Caltrans 2022l) were prepared for the project. While some of the drainage systems are within designated flood zones, the proposed construction activities are not expected to have any significant adverse floodplain impacts. The project involves the replacement and rehabilitation of existing drainage systems, does not propose adding new impervious area, and would result in the upsizing of many currently undersized culverts. Hydraulic recommendations include increasing culvert capacity at most locations. Preliminary design includes upsizing 32 culverts. Increasing culvert diameter is anticipated to reduce the occurrence of flooding upstream of culverts and water velocities at culvert outlets, which would decrease erosion downstream of the culverts. The proposed project would improve existing storm drain facilities to better protect roadways and increase resiliency to localized flooding. Some culverts would be replaced with shorter pipes, daylighting approximately 700 feet of flow and allowing for more area to provide natural infiltration of

surface flows. Based on the scope of work, which would improve existing drainage systems to reduce scour, erosion, siltation, localized flooding, maintenance issues, and improve climate resiliency, potential adverse impacts to drainage patterns are not anticipated.

The project is anticipated to have **"*No Impact*"** on drainage patterns. No mitigation would be required.

d) In flood hazard, tsunami, or seiche zones, would the project risk release of pollutants due to project inundation?

Work would be performed during periods of low or no flow in drainage systems. Where water is present during construction, dewatering and/or clear water diversion would be performed in accordance with Caltrans BMPs to protect waters from risk of pollutant release. Standard measures to minimize risk of release of hazardous materials are incorporated into the project scope. **"*No impacts*"** are anticipated, and no mitigation would be required.

e) Would the project conflict with or obstruct implementation of a water quality control plan or sustainable groundwater management plan?

The drainage system improvement project would not obstruct implementation of a water quality or groundwater management plan. **"*No Impacts*"** are anticipated, and no mitigation would be required.

Mitigation Measures

Based on the determinations made in the CEQA Environmental Checklist, no mitigation measures are proposed for this project.

2.11 Land Use and Planning

Question	Significant and Unavoidable Impact	Less Than Significant with Mitigation Incorporated	Less Than Significant Impact	No Impact
Would the project: a) Physically divide an established community?				✓
Would the project: b) Cause a significant environmental impact due to a conflict with any land use plan, policy, or regulation adopted for the purpose of avoiding or mitigating an environmental effect?				✓

"No Impact" determinations in this section are based on the scope, description, and location of the proposed project. Potential impacts to land use and planning are not anticipated as the proposed project would not divide an established community or conflict with a land use plan, policy, or regulation adopted for the purpose of avoiding or mitigating an environmental effect. The project would therefore have ***"No Impact"*** on land use and community planning. No mitigation would be required.

2.12 Mineral Resources

Question:	Significant and Unavoidable Impact	Less Than Significant with Mitigation Incorporated	Less Than Significant Impact	No Impact
Would the project: a) Result in the loss of availability of a known mineral resource that would be of value to the region and the residents of the state?				✓
Would the project: b) Result in the loss of availability of a locally-important mineral resource recovery site delineated on a local general plan, specific plan or other land use plan?				✓

"No Impact" determinations in this section are based on the scope, description, and location of the proposed project, as well as the California Department of Conservation Division of Mine Reclamation Mines Online web application (DMR 2022). Given there are no designated mineral resource areas of state or regional importance in the project area, and the project would not reduce the availability of a locally-important mineral resource recovery site, the project is anticipated to have ***"No Impact"*** on mineral resources. No mitigation would be required.

2.13 Noise

Question	Significant and Unavoidable Impact	Less Than Significant with Mitigation Incorporated	Less Than Significant Impact	No Impact
Would the project result in: a) Generation of a substantial temporary or permanent increase in ambient noise levels in the vicinity of the project in excess of standards established in the local general plan or noise ordinance, or applicable standards of other agencies?				✓
Would the project result in: b) Generation of excessive groundborne vibration or groundborne noise levels?				✓
Would the project result in: c) For a project located within the vicinity of a private airstrip or an airport land use plan or, where such a plan has not been adopted, within two miles of a public airport or public use airport, would the project expose people residing or working in the project area to excessive noise levels?				✓

"No Impact" determinations in this section are based on the scope, description, and location of the proposed project, as well as the *Environmental Impact Evaluation for Air Quality, Traffic Noise, and Greenhouse Gas* dated February 11, 2022 (Caltrans 2022b). The project would improve existing drainage facilities and would not involve the construction of a new highway or expansion of an existing highway. Traffic volumes, composition, and speeds would remain the same. Based on the scope of work, the project is considered a Type III project, which does not require a noise analysis. Permanent traffic noise impacts are not anticipated and noise abatement is not considered.

Noise generated during construction would be temporary and would not result in a substantial temporary or permanent increase of ambient noise levels in the vicinity of the project. The project site is predominantly within forest and agricultural lands where development is limited (County of Humboldt 2021).

Drainage systems near Rio Dell and Weott are near residential development; however, ambient highway noise, short-duration work periods, and compliance with Caltrans standard noise specifications would prevent excessive noise levels. Potential noise impacts on humans are not anticipated. Potential noise impacts on wildlife are discussed in Section 2.4.

Given the above, the project is anticipated to have ***"No Impact"*** on noise and vibration. No mitigation would be required.

2.14 Population and Housing

Question	Significant and Unavoidable Impact	Less Than Significant with Mitigation Incorporated	Less Than Significant Impact	No Impact
Would the project: a) Induce substantial unplanned population growth in an area, either directly (for example, by proposing new homes and businesses) or indirectly (for example, through extension of roads or other infrastructure)?				✓
Would the project: b) Displace substantial numbers of existing people or housing, necessitating the construction of replacement housing elsewhere?				✓

"No Impact" determinations in this section are based on the scope, description, and location of the proposed project. Potential impacts to population and housing are not anticipated because the project does not involve the construction of homes, businesses, road extensions, or infrastructure that could induce population growth. The project would not provide new access or open a new area to development. The project would not involve acquisition of land occupied by homes or residences and would not result in displacement of people or housing.

Given the above, the project is anticipated to have ***"No Impact"*** on population and housing. No mitigation would be required.

2.15 Public Services

Question	Significant and Unavoidable Impact	Less Than Significant with Mitigation Incorporated	Less Than Significant Impact	No Impact
a) Would the project result in substantial adverse physical impacts associated with the provision of new or physically altered governmental facilities, need for new or physically altered governmental facilities, the construction of which could cause significant environmental impacts, in order to maintain acceptable service ratios, response times or other performance objectives for any of the public services: Fire protection?				✓
Police protection?				✓
Schools?				✓
Parks?				✓
Other public facilities?				✓

"No Impact" determinations in this section are based on the scope, description, and location of the proposed project. The culvert rehabilitation project would not result in an increased demand for fire or police protection or increased demand for space in schools, parks, or other public facilities in the area. Although there would be temporary, short-term ramp and lane closures during construction, all emergency response agencies in the project area would be notified of the project construction schedule and would have access to US 101 throughout the construction period.

Given the above, the project is anticipated to have ***"No Impact"*** on public services. No mitigation would be required.

2.16 Recreation

Question	Significant and Unavoidable Impact	Less Than Significant with Mitigation Incorporated	Less Than Significant Impact	No Impact
a) Would the project increase the use of existing neighborhood and regional parks or other recreational facilities such that substantial physical deterioration of the facility would occur or be accelerated?				✓
b) Does the project include recreational facilities or require the construction or expansion of recreational facilities which might have an adverse physical effect on the environment?				✓

"No Impact" determinations in this section are based on the scope, description, and location of the proposed project. Potential impacts to recreational facilities due to deterioration, expansion, or construction of new facilities are not anticipated. The project would involve the replacement of existing culverts and would not result in an increased demand for park resources that could cause deterioration of existing parks or recreational facilities. The project does not include the construction of park resources or recreational facilities or the expansion of such facilities. Temporary impacts on State Parks land during construction are addressed in the Section 4(f) *de minimis* evaluation provided in Appendix F.

Given the above, the project is anticipated to have ***"No Impact"*** on recreation. No mitigation would be required.

2.17 Transportation

Question	Significant and Unavoidable Impact	Less Than Significant with Mitigation Incorporated	Less Than Significant Impact	No Impact
Would the project: a) Conflict with a program, plan, ordinance, or policy addressing the circulation system, including transit, roadway, bicycle and pedestrian facilities?				✓
Would the project: b) Conflict or be inconsistent with CEQA Guidelines § 15064.3, subdivision (b)?				✓
Would the project: c) Substantially increase hazards due to a geometric design feature (e.g., sharp curves or dangerous intersections) or incompatible uses (e.g., farm equipment)?				✓
Would the project: d) Result in inadequate emergency access?				✓

"No Impact" determinations in this section are based on the scope, description, and location of the proposed project, as well as the *Transportation Management Plan* (TMP) prepared for this project, dated May 12, 2022 (Caltrans 2022m)[4]. Although there would be temporary traffic delays on US 101 and State Route (SR) 254 during construction due to ramp and lane closures, there would not be any permanent changes to transportation or traffic. The project would not increase capacity and is not expected to be traffic inducing; therefore, is consistent with CEQA Guidelines §15064.3, subdivision (b), and an analysis of vehicle miles traveled (VMT) is not warranted. The drainage system improvement project would not result in a change to the geometric design of the roadway such that there would be increased hazards.

The project would generate short-term construction traffic and result in temporary lane and ramp closures. Construction traffic would be scheduled and routed to reduce congestion.

[4] The TMP is a dynamic document subject to change based on design evolution, event schedules, and field conditions during construction.

The southernmost location (PM 2.40) is situated where US 101 is a two-lane highway. The TMP would be tailored to minimize project-related traffic delays by the effective application of traditional traffic abatement strategies and an innovative combination of project-specific public and motorist information, demand management, incident management, system management, alternate route strategies, construction strategies, and other strategies.

Temporary lane and ramp closures on US 101 and SR 254 would be coordinated with adjacent projects and special events to minimize cumulative delay. Specifically, one lane in each direction of travel would be open for use by public traffic at all locations, including PM 2.40, during the following events (actual dates would be verified by the contractor):

- Cal Poly Humboldt Graduation, 2nd weekend in May
- Redwood Run & Music Festival, 2nd weekend in June
- Northern Nights Music Festival, 2nd weekend in July
- Reggae on the River, 1st weekend in August

The Humboldt Transit Authority (HTA) Southern Humboldt Intercity system has bus stops within the project site:

- PM 33.23 in Weott. Bus stops would be affected when the US 101 southbound off-ramp and US 101 northbound on-ramp have closures.
- PM R39.65 in Redcrest. Bus stops would be affected when the US 101 southbound on-ramp and 101 northbound off-ramp have closures.
- PM R52.49 in Rio Dell at Davis Street exit. Bus stop would be affected when US 101 northbound off-ramp has a closure.

HTA buses also use the ramps at PM 17.7 (US 101/SR 254 interchange) to access SR 254, although there is no bus stop at this location. HTA would be notified at least 10 business days before the start of work for temporary closures that could potentially affect these routes to allow for adjusting bus stop locations within the construction zones. There are no park-and-ride facilities near the work locations and no new park-and-ride facilities are proposed.

Bicycles would be accommodated through the construction area at all times. Emergency response agencies in the project area would be notified of the project construction schedule and would have access to US 101 and SR 254 throughout the construction period.

Given the above, the project is anticipated to have **"*No Impact*"** on transportation systems. No mitigation would be required.

2.18 Tribal Cultural Resources

Question	Significant and Unavoidable Impact	Less Than Significant with Mitigation Incorporated	Less Than Significant Impact	No Impact
Would the project cause a substantial adverse change in the significance of a tribal cultural resource, defined in Public Resources Code § 21074 as either a site, feature, place, or cultural landscape that is geographically defined in terms of the size and scope of the landscape, sacred place, or object with cultural value to a California Native American tribe, and that is: a) Listed or eligible for listing in the California Register of Historical Resources, or in a local register of historical resources as defined in Public Resources Code § 5020.1(k), or				✓
b) A resource determined by the lead agency, in its discretion and supported by substantial evidence, to be significant pursuant to criteria set forth in subdivision (c) of Public Resources Code § 5024.1. In applying the criteria set forth in subdivision (c) of Public Resource Code § 5024.1, the lead agency shall consider the significance of the resource to a California Native American tribe.				✓

"No Impact" determinations in this section are based on the scope, description, and location of the proposed project, as well as the *Initial Cultural Resources Findings* memo dated August 5, 2022 (Caltrans 2022g) and *Archaeological Survey Report*, dated February 2023 (Caltrans 2023b). The Native American Heritage Commission (NAHC) was contacted in 2022 by the project archaeologist with a request for a consultation list of tribes, groups, and individuals who have expressed an interest in the project vicinity and for a review of the Sacred Lands File for any potential sacred sites within the project vicinity.

The NAHC responded with a negative result for sacred lands, which indicates sacred sites were not identified within the project vicinity. The NAHC also provided a list of Native American tribes, groups, and individuals pursuant to Section 106 consultation requirements. Outreach and consultation efforts included the Bear River Band of Rohnerville Rancheria, Eel River Sovereign Nation of Wailaki, and Intertribal Sinkyone Wilderness Council. No concerns have been raised to date.

During the public comment period, the Wiyot Tribe recommended "inadvertent discovery protocol." Standard measures for the discovery of cultural materials or human remains are incorporated into the project (CR-1 and CR-2 in Section 1.4). Caltrans and its contractors must follow 36 CFR 800.13, which requires the following actions in the event that cultural items are encountered during construction: 1) all work in the area of discovery must be suspended, 2) all consulted parties would be notified to consult on the discovery, 3) a qualified archaeologist, working with the consulting parties, would make a determination on what was encountered, and 4) if the discovery is determined to be a previously undocumented cultural resource, a plan is developed and implemented in consultation with the consulting parties.

Caltrans will continue to consult with interested tribes throughout the life of the project as required.

Given the above, the project is anticipated to have **"*No Impact*"** on tribal cultural resources. No mitigation would be required.

2.19 Utilities and Service Systems

Question	Significant and Unavoidable Impact	Less Than Significant with Mitigation Incorporated	Less Than Significant Impact	No Impact
Would the project: a) Require or result in the relocation or construction of new or expanded water, wastewater treatment or stormwater drainage, electric power, natural gas, or telecommunications facilities—the construction or relocation of which could cause significant environmental effects?				✓
Would the project: b) Have sufficient water supplies available to serve the project and reasonably foreseeable future development during normal, dry, and multiple dry years?				✓
Would the project: c) Result in a determination by the wastewater treatment provider which serves or may serve the project that it has adequate capacity to serve the project's projected demand in addition to the provider's existing commitments?				✓
Would the project: d) Generate solid waste in excess of State or local standards, or in excess of the capacity of local infrastructure, or otherwise impair the attainment of solid waste reduction goals?				✓
Would the project: e) Comply with federal, state, and local management and reduction statutes and regulations related to solid waste?				✓

"No Impact" determinations in this section are based on the scope, description, and location of the proposed project. The proposed project would rehabilitate existing culverts and drainage systems to good condition, with no new or expanded drainage systems proposed other than the upsizing of currently undersized culverts. Buried and overhead utilities are present within the project limits. AT&T, PG&E, Frontier Communications, and Caltrans all have utilities at or near work locations. A majority of utilities are either not within the immediate vicinity of proposed work or can be protected in place during construction. Some minor realignment of a culvert at PM 2.40 is proposed to avoid impacting a retaining wall, however, is not expected to conflict with existing utilities. Recently installed AT&T fiber optic cable that has punctured through culverts has been discovered at the PM 35.00 location. The fiber optic lines would either be replaced outside of the proposed culvert work by AT&T prior to completed design, relocated during construction, or abandoned if found to be obsolete. District 1 is working with AT&T to identify obsolete fiber optic lines within the project footprint. Conflicts between Caltrans-owned electrical utilities and proposed drainage systems are expected at PM R17.76 and PM R52.49. If a conflict is discovered, Caltrans electrical systems would be adjusted to accommodate new drainage features.

The project would not result in new demand for water supplies, wastewater treatment, or stormwater drainage; does not propose new or expanded natural gas, electric power, or telecommunications systems; and would not generate excess solid waste or conflict with solid waste regulations.

Given the above, the project is anticipated to have **"*No Impact*"** on utilities and service systems. No mitigation would be required.

2.20 Wildfire

Question	Significant and Unavoidable Impact	Less Than Significant with Mitigation Incorporated	Less Than Significant Impact	No Impact
If located in or near State Responsibility Areas (SRAs) or lands classified as very high Fire Hazard Severity Zones, would the project: a) Substantially impair an adopted emergency response plan or emergency evacuation plan?				✓
b) Due to slope, prevailing winds, and other factors, exacerbate wildfire risks, and thereby expose project occupants to pollutant concentrations from a wildfire or the uncontrolled spread of a wildfire?				✓
c) Require the installation or maintenance of associated infrastructure (such as roads, fuel breaks, emergency water sources, power lines or other utilities) that may exacerbate fire risk or may result in temporary or ongoing impacts to the environment?				✓
d) Expose people or structures to significant risks, including downslope or downstream flooding or landslides, as a result of runoff, post-fire slope instability, or drainage changes?				✓

Senate Bill 1241 required the Office of Planning and Research, the Natural Resources Agency, and the California Department of Forestry and Fire Protection to develop amendments to the "CEQA Environmental Checklist" for the inclusion of questions related to fire hazard impacts for projects located on lands classified as very high Fire Hazard Severity Zones. The 2018 updates to the CEQA Guidelines expanded this to include projects "near" these very high Fire Hazard Severity Zones.

"No Impact" determinations in this section are based on the scope, description, and location of the proposed project. The project site is located within both a Local Responsibility Area (LRA), served by the Rio Dell Fire Protection District, and a State Responsibility Area (SRA), served by CAL FIRE (refer to Section 2.8–Figure 8). Within the SRA, the project site is primarily within the *moderate* or *high* Fire Hazard Severity Zones (FHSZ), with drainage systems at Post Miles 13.39, 17.54, and 17.76 in a *very high* FHSZ from the Humboldt/Mendocino County line to the Avenue of the Giants ramps south of Phillipsville. Within the LRA, the project site is within the *moderate* Fire Hazard Severity Zone (County of Humboldt 2021).

The proposed work would not impair an adopted emergency response plan or emergency evacuation plan, exacerbate wildfire risks, or expose people or structures to significant risks. Emergency response agencies in the project area would be notified of the project construction schedule and would have access to US 101 and SR 254 throughout the construction period. Emergency vehicles would be accommodated through any temporary ramp or lane closures. If a wildland fire affected the area, work would stop, and evacuation routes would be accessible. Standard measures listed in Section 2.8 would further minimize wildfire risk during construction.

Given the above, the project is anticipated to have **"*No Impact*"** to wildfire. No mitigation would be required.

2.21 Mandatory Findings of Significance

Does the project:	Significant and Unavoidable Impact	Less Than Significant with Mitigation Incorporated	Less Than Significant Impact	No Impact
a) Have the potential to substantially degrade the quality of the environment, substantially reduce the habitat of a fish or wildlife species, cause a fish or wildlife population to drop below self-sustaining levels, threaten to eliminate a plant or animal community, substantially reduce the number or restrict the range of a rare or endangered plant or animal, or eliminate important examples of the major periods of California history or prehistory?			✓	
b) Have impacts that are individually limited, but cumulatively considerable? ("Cumulatively considerable" means the incremental effects of a project are considerable when viewed in connection with the effects of past projects, the effects of other current projects, and the effects of probable future projects.)				✓
c) Have environmental effects which will cause substantial adverse effects on human beings, either directly or indirectly?				✓

Discussion of CEQA Environmental Checklist Question 2.21—Mandatory Findings of Significance

a) Does the project have the potential to substantially degrade the quality of the environment, substantially reduce the habitat of a fish or wildlife species, cause a fish or wildlife population to drop below self-sustaining levels, threaten to eliminate a plant or animal community, substantially reduce the number or restrict the range of a rare or endangered plant or animal, or eliminate important examples of the major periods of California history or prehistory?

With mitigation incorporated, impacts to biological resources would be reduced to a less than significant level. Impacts to Greenhouse Gas Emissions and Hydrology and Water Quality have been determined to be less than significant. There would be no impacts to the remaining environmental resources analyzed in the Initial Study. As the analysis in the Initial Study shows, the proposed project would not degrade the quality of the environment, nor would it eliminate examples of California history or prehistory. The project is anticipated to have a "*Less than Significant Impact."*

b) Does the project have impacts that are individually limited, but cumulatively considerable? ("Cumulatively considerable" means the incremental effects of a project are considerable when viewed in connection with the effects of past projects, the effects of other current projects, and the effects of probable future projects.)

The project would not result in cumulative impacts. The project would not increase traffic, VMT, or capacity of the transportation facility, and would not directly or indirectly induce population growth. The project would therefore have "*No Impacts"* that would be cumulatively considerable.

c) Does the project have environmental effects which will cause substantial adverse effects on human beings, either directly or indirectly?

As discussed in the Initial Study, the project would have "*No Impact*," directly or indirectly, on human beings.

2.22 Cumulative Impacts

Cumulative impacts are those that result from past, present, and reasonably foreseeable future actions, combined with the potential impacts of this proposed project. A cumulative impact assessment looks at the collective impacts posed by individual land use plans and projects. Cumulative impacts can result from individually minor but collectively substantial impacts taking place over a period of time (CEQA § 15355).

Cumulative impacts to resources may result from residential, commercial, industrial, and highway development, as well as from agricultural development and the conversion to more intensive agricultural cultivation. These land use activities can degrade habitat and species diversity through consequences such as displacement and fragmentation of habitats and populations, alteration of hydrology, contamination, erosion, sedimentation, disruption of migration corridors, changes in water quality, and introduction or promotion of predators. They can also contribute to potential community impacts identified for the project, such as changes in community character, traffic patterns, housing availability, and employment.

Per Section 15130 of CEQA, a Cumulative Impact Analysis (CIA) discussion is only required in "…situations where the cumulative effects are found to be significant." An EIR is required in all situations when a project might result in a "significant" direct, indirect, or cumulative impact on any resource. Impacts as a result of the proposed project are less than significant. Therefore, an EIR and CIA were not required for this project.



Chapter 3. Agency and Public Coordination

Early and continuing coordination with the general public and public agencies is an essential part of the environmental process. It helps planners determine the necessary scope of environmental documentation and the level of analysis required, and to identify potential impacts and avoidance, minimization and/or mitigation measures and related environmental requirements. Agency and tribal consultation and public participation for this project have been accomplished through a variety of formal and informal methods, including Project Development Team (PDT) meetings, interagency coordination meetings and site visits, and correspondence. This chapter summarizes the results of Caltrans' efforts to identify, address, and resolve project-related issues through early and continuing coordination.

The Notice of Intent (NOI) to Adopt an Initial Study with Proposed Mitigated Negative Declaration and Draft Section 4(f) *de minimus* Evaluation was emailed to all agencies, adjacent landowners, and interested parties indicated in the distribution list in Chapter 5. A project web page was developed to provide digital access to the Draft Environmental Document (DED). The NOI, which included the project web page link, public comment deadline, email address, mailing address, phone numbers, and physical locations where the DED could be accessed, was posted in the Times-Standard on Sunday, December 4, 2022. Copies of the DED were made available at the Rio Dell and Garberville public libraries and the Eureka Caltrans office.

The following agencies, organizations, and individuals were consulted in the preparation of this environmental document.

Coordination with Resource Agencies

Beginning in March of 2021, scientific research permits for biological and cultural studies within State Parks were coordinated by Julie Price, Jackie Farrington, and Stantec Consulting Services with State Parks personnel Rosalind Litzky, Amber Barton, and Greg Collins.

On June 30, 2022, a site visit was conducted with State Parks personnel Rosalind Litzky, Marisa Parish-Hanson, and Patrick Kolence, and Caltrans personnel Julie East, Julie Price, and Bryan Atkinson to discuss potential Section 4(f) impacts at five locations that are situated on or accessed through State Parks land. Caltrans shared subsequent proposed changes in culvert system design with Parks staff. Feedback received from State Parks has been incorporated into the final Section 4(f) *de minimis* evaluation provided in Appendix F.

No public comments were received on the evaluation. Written concurrence from State Parks was received on the *de minimis* finding on April 4, 2023.

Caltrans personnel consulted with Caltrans liaisons Mike Kelly of NMFS and Greg Schmidt of USFWS regarding use of the PBO and PLOC, respectively, for this project. Site visits with Caltrans liaison Greg O'Connell of CDFW were conducted with Environmental and Design staff on October 11 and November 21, 2022. Consultation with CDFW has been ongoing, and informal comments have been incorporated into the project designs. Consultation with NCRWQCB personnel is planned. There were no formal comments received from resource agencies during the public comment period.

Concurrent with circulation of the DED, Caltrans notified the National Park Service of the Wild and Scenic River status of the South Fork River and mainstem of the Eel River. Concurrence with the determination that the proposed project would not alter the status or values of the rivers was received on December 12, 2022. Documentation is provided in Appendix E.

Tribal Consultation

Native American consultation for this project was initiated on February 16, 2021, by email notification to tribes in keeping with then-current COVID-19 procedures. Periodic phone calls were also made. The most recent request sent to the NAHC was on July 12, 2022, for information from their Sacred Lands File, with negative results returned on August 16, 2022. The NAHC also returned a list of Native American Tribes and interested individuals. A supplemental NAHC request was submitted in 2022 due to modification of the project post miles. Outreach and consultation efforts included the Bear River Band of Rohnerville Rancheria, Eel River Sovereign Nation of Wailaki, and Intertribal Sinkyone Wilderness Council. No responses were received.

During the public comment period, the Wiyot Tribe recommended "inadvertent discovery protocol." Standard measures for the discovery of cultural materials or human remains are incorporated into the project (CR-1 and CR-2 in Section 1.4). Caltrans will continue to consult with interested tribes and individuals throughout the life of this project.

Circulation

The DED circulated to the public for 36 days between November 3, 2022, and December 9, 2022. Other than the recommendation from the Wiyot Tribe, no comments were received during the public review period.

Chapter 4. List of Preparers

The following individuals performed the environmental work and contributed to the preparation of the Initial Study / Proposed Mitigated Negative Declaration for this project:

California Department of Transportation, District 1

Alex Arevalo	Water Quality Specialist
Amanda Chiachi	Sea Grant Fellow (Wild and Scenic Rivers Coordinator)
Bryan Atkinson	Environmental Scientist–Natural Resources
Christian Figueroa	Transportation Engineer/Geologist– Hazardous Waste and Paleontology Coordinator
Daniel Anderson	Transportation Engineer (Designer)
Jackie Farrington	Associate Environmental Planner–Archaeologist
Jason Lee	Air Quality Specialist
Julie East	Senior Environmental Scientist
Julie Price	Environmental Coordinator
Matt Smith	Project Engineer
Rachel Conway	Environmental Coordinator
Tim Keefe	Senior Environmental Planner–Archaeologist
Tomas Shermer	Transportation Engineer
Valerie Jones	Landscape Associate

HDR Engineering Inc-WRECO (Water Quality Assessment)

Ashley Chan	Staff Environmental Scientist
Christine Boschen	Senior Environmental Scientist
Jada Golland	Staff Environmental Scientist
Jiacheng Fan	Staff Engineer
Joyce Cheng	Senior Engineer

Stantec Consulting Services, Inc. (Aquatic Resources)

Brendan Cohen	Biologist
Mark Wuestehube	Principal, Task Manager
Sarah Tona	Associate Biologist

TransTerra Consulting LLC (Botanical and Vegetation Surveys)

Holly Vadurro	Associate Biologist
Tamara Camper	Senior Biologist

Chapter 5. Distribution List

Federal and State Agencies

Daniel Breen, U.S. Army Corps of Engineers
1455 Market Street, 16th Floor
San Francisco, CA 94103

Greg Schmidt, U.S. Fish and Wildlife Service
1655 Heindon Road
Arcata, CA 95518

Gregory O'Connell, California Department of Fish and Wildlife
619 Second Street
Eureka, CA 95501

Mike Kelly, NOAA Fisheries West Coast Region
1655 Heindon Road
Arcata, CA 95521

Susan Stewart, North Coast Regional Water Quality Control Board
5550 Skylane Blvd, Suite A
Santa Rosa, CA 95403-1072

Rosalind Litzky, California State Parks
North Coast Redwoods District
P.O. Box 2006
Eureka, CA 95502-2006

Stephen Bowes, National Park Service
Interior Region 8, 9, 10, 12
909 First Ave #500
Seattle, CA 98104

Regional/County/Local Agencies

Humboldt County Clerk
825 5th Street
Eureka, CA 95502

Humboldt County Association of Governments
611 I Street, Suite B
Eureka, CA 95501

Local Elected Officials

Rex Bohn, 1st District County Supervisor
825 5th Street, Room 111
Eureka, CA 95501

Michelle Bushnell, 2nd District County Supervisor
825 5th Street, Room 111
Eureka, CA 95501

Tribal Contacts

Bear River Band of Rohnerville Rancheria
The Honorable Josefina Cortez, Chairwoman
266 Keisner Road
Loleta, CA 95551

Bear River Band of Rohnerville Rancheria
Erika Cooper, THPO
266 Keisner Road
Loleta, CA 95551

Bear River Band of Rohnerville Rancheria
Edward Bowie, Cultural Liaison
266 Keisner Road
Loleta, CA 95551

Eel River Sovereign Nation of Wailaki
Doyle Womack, Cultural Department
P.O. Box 156
Redway, CA 95560

Eel River Sovereign Nation of Wailaki
Kenny Chadbourne, Chairman
P.O. Box 156

Redway, CA 95560
Intertribal Sinkyone Wilderness Council
Intertribalsinkyone@sbcglobal.net

Wiyot Tribe
The Honorable Theodore Hernandez, Chairperson
1000 Wiyot Drive
Loleta, CA 95551

Wiyot Tribe
Hazel James
1000 Wiyot Drive
Loleta, CA 95551



Chapter 6. References

California Air Resources Board (CARB). 2022a. Greenhouse Gas Emissions and Trends for 2000 to 2020. https://ww2.arb.ca.gov/our-work/programs/ghg-inventory-program. Accessed: November 2, 2022.

_____. 2022b. AB 32 Climate Change Scoping Plan. Available: https://ww2.arb.ca.gov/our-work/programs/ab-32-climate-change-scoping-plan. Accessed: November 2, 2022.

_____. 2022c. Climate Change. https://ww2.arb.ca.gov/our-work/topics/climate-change. Accessed: November 2, 2022.

California Department of Conservation Division of Mine Reclamation (DMR). 2022. Mines Online. https://maps.conservation.ca.gov/mol/index.html. Accessed: August 3, 2022.

California Department of Fish and Wildlife (CDFW). 2019. *ACE Datasheet Fact Sheet Terrestrial Connectivity* (DS2734). August 21, 2019.

_____. 2022a. *Natural Communities.* https://wildlife.ca.gov/Data/VegCAMP/Natural-Communities#sensitive%20natural%20communities. Accessed: October 12, 2022.

_____. 2022b. Areas of Conservation Emphasis. https://apps.wildlife.ca.gov/ace/. Accessed: October 12, 2022.

California Department of Forestry and Fire Protection (CAL FIRE). 2021. Fire Hazard Severity Zone (FHSZ) Viewer. https://egis.fire.ca.gov/FHSZ/. Accessed: August 3, 2022.

California Department of Transportation (Caltrans). 2014. *Field Guide to Construction Site Dewatering*. June 2014.

_____. 2016. *Caltrans Statewide Stormwater Management Plan*. July 20, 2016.

_____. 2019. *Caltrans Climate Change Vulnerability Assessments. District 1 Technical Report*. October. Prepared by WSP. https://dot.ca.gov/programs/transportation-planning/division-of-transportation-planning/air-quality-and-climate-change/2019-climate-change-vulnerability-assessments. Accessed: July 11, 2022.

_____. 2020. *Caltrans Greenhouse Gas Emissions and Mitigation Report*. Final. August. Prepared by ICF, Sacramento, CA. https://dot.ca.gov/programs/public-affairs/mile-marker/summer-2021/ghg. Accessed: November 2, 2022.

_____. 2021a. *California Transportation Plan 2050*. February. https://dot.ca.gov/programs/transportation-planning/state-planning/california-transportation-plan. Accessed: November 2, 2022.

_____. 2021b. *Caltrans 2020-2024 Strategic Plan*. https://dot.ca.gov/-/media/dot-media/programs/risk-strategic-management/documents/sp-2020-16p-web-a11y.pdf. Accessed: November 2, 2022.

_____. 2021c. Initial Site Assessment. May 6, 2021.

_____. 2022a. *Visual Impact Assessment.* February 14, 2022.

_____. 2022b. *Environmental Impact Evaluation for Air Quality, Traffic Noise, and Greenhouse Gas.* February 11, 2022.

_____. 2022c. *Natural Environment Study.* October 2022.

_____. 2022d. *Botanical and Vegetation Resources Survey.* August 2022.

_____. 2022e. *Aquatic Resources Delineation Report.* June 2022.

_____. 2022f. *Draft Mitigation Summary – HUM-101 Drainage South*. October 14, 2022.

_____. 2022g. *Initial Cultural Resources Findings for 01-0H640.* August 5, 2022.

_____. 2022h. *Environmental Impact Evaluation – Energy*. February 18, 2022.

_____. 2022i. *Draft Project Report.* September 2022.

_____. 2022j. *Water Quality Assessment Report.* June 2022.

_____. 2022k. *Floodplain Evaluation Report Summary.* Undated.

_____. 2022l. *0-Phase Hydraulic Recommendations*. July 19, 2022.

_____. 2022m. *Transportation Management Plan*. May 12, 2022.

_____. 2023a. *Addendum to Natural Environment Study.* March 30, 2023.

_____. 2023b. *Archaeological Survey Report.* February 2023.

_____. 2023c. *Historic Property Survey Report*. February 2023.

California Environmental Protection Agency. 2015. *California Climate Strategy*. https://calepa.ca.gov/wp-content/uploads/sites/6/2016/10/Climate-Documents-2015yr-CAStrategy.pdf. Accessed: November 2, 2022.

California Geological Survey (CGS). 2015a. Fault Activity Map of California (2015). http://maps.conservation.ca.gov/cgs/fam/. Accessed: August 1, 2022.

_____. 2015b. The California Landslide Inventory. https://maps.conservation.ca.gov/cgs/lsi/app/. Accessed: August 1, 2022.

California Governor's Office of Planning and Research (OPR). 2015. *A Strategy for California @ 50 Million.* November. https://opr.ca.gov/docs/EGPR_Nov_2015.pdf. Accessed: November 2, 2022.

_____. 2022. *Carbon Neutrality by 2045*. https://opr.ca.gov/climate/carbon-neutrality.html. Accessed: November 2, 2022.

California Native Plant Society (CNPS). 2020. *Technical Memorandum: Considerations for Including CRPR 4 Plant Taxa in CEQS Biological Resource Impact Analysis*. Accessed: January 21, 2020.

California Natural Resources Agency. 2022a. *Natural and Working Lands Climate Smart Strategy*. https://resources.ca.gov/Initiatives/Expanding-Nature-Based-Solutions. Accessed: November 2, 2022.

_____. 2022b. *California Climate Adaptation Strategy*. https://climateresilience.ca.gov/. Accessed: November 2, 2022.

California State Transportation Agency. 2021. *Climate Action Plan for Transportation Infrastructure (CAPTI)*. https://calsta.ca.gov/subject-areas/climate-action-plan. Accessed: November 2, 2022.

Climate Change Infrastructure Working Group. 2018. *Paying it Forward: The Path Toward Climate-Safe Infrastructure in California*. September. https://files.resources.ca.gov/climate/climate-safe-infrastructure-working-group/. Accessed: December 13, 2021.

County of Humboldt. 2017. *Humboldt County General Plan for the Areas Outside the Coastal Zone.* Adopted October 23, 2017. https://humboldtgov.org/DocumentCenter/View/61984/Humboldt-County-General-Plan-complete-document-PDF. Accessed: August 3, 2022

_____. 2021. Humboldt County Web GIS. *Department of Water Resources Awareness Floodplain.* https://webgis.co.humboldt.ca.us/HCEGIS2.0/. Accessed July 25, 2022.

_____. 2022. VROOM: Variety in Rural Options of Mobility 2022-2042. *Humboldt County Association of Governments 20-Year Regional Transportation Plan, 2022 Update*. January 2022. https://hcaog.net/sites/default/files/vroom_2022-2042_full_report.pdf. Accessed July 14, 2022.

Environmental Laboratory. 1987. U.S. Army Corp of Engineers (USACE). *Corps of Engineers Wetlands Delineation Manual*. January 1987.

Federal Highway Administration (FHWA). 2022. *Sustainability*. https://www.fhwa.dot.gov/environment/sustainability/resilience/. Last updated July 29, 2022. Accessed: November 2, 2022.

_____.No date. *Sustainable Highways Initiative*. https://www.sustainablehighways.dot.gov/overview.aspx. Accessed: November 2, 2022.

National Highway Traffic Safety Administration (NHTSA). 2022. *USDOT Announces New Vehicle Fuel Economy Standards for Model Year 2024–2026*. Press release. April 21. https://www.nhtsa.gov/press-releases/usdot-announces-new-vehicle-fuel-economy-standards-model-year-2024-2026. Accessed: November 2, 2022.

National Marine Fisheries Service. 2013. *Programmatic Biological Opinion for Caltrans' Routine Maintenance and Repair Activities Program in Caltrans' Districts 1, 2, and 4*. October 18, 2013.

State of California. 2018. *California's Fourth Climate Change Assessment*. http://www.climateassessment.ca.gov/. Accessed: November 2, 2022.

U.S. Department of Transportation (U.S. DOT). 2011. *Policy Statement on Climate Change Adaptation.* https://www.transportation.gov/sites/dot.dev/files/docs/Policy_on_Aaptation2011.pdf. *Accessed: November 2, 2022.*

_____. 2014. *Corporate Average Fuel Economy (CAFE) Standards*. https://www.transportation.gov/mission/sustainability/corporate-average-fuel-economy-cafe-standards. Accessed: November 2, 2022.

_____. 2021. *Climate Action Plan: Ensuring Transportation Infrastructure and System Resilience*. https://www.transportation.gov/sites/dot.gov/files/docs/DOT%20Adaptation%20Plan.pdf. Accessed: November 2, 2022.

U.S. Environmental Protection Agency (U.S. EPA). 2022a. *Final Rule to Revise Existing National GHG Emissions Standards for Passenger Cars and Light Trucks Through Model Year 2026*. December. https://www.epa.gov/regulations-emissions-vehicles-and-engines/final-rule-revise-existing-national-ghg-emissions. Accessed: November 2, 2022.

_____. 2022b. Inventory of U.S. Greenhouse Gas Emissions and Sinks 1990-2020. https://www.epa.gov/ghgemissions/inventory-us-greenhouse-gas-emissions-and-sinks. Accessed: November 2, 2022.

U.S. Fish and Wildlife Service (USFWS). 2010. *Best Management Practices to Minimize Adverse Effects to Pacific Lamprey (Entosphenus tridentatus)*. April 2010.

_____. 2020. Revised Transmittal on Guidance: *Estimating the Effects of Auditory and Visual Disturbance to Northern Spotted Owl and Marbled Murrelets in Northwestern California.* Technical Guidance prepared by USFWS for the California Department of Transportation.

_____. 2022. *Reinitiation of Informal Consultation for the California Department of Transportation's Routine Maintenance and Repair Activities, and Small Projects Program for Districts 1 and 2* (PLOC). Undated.

The White House. 2021. *Executive Order on Tackling the Climate Crisis at Home and Abroad*. January 27. https://www.whitehouse.gov/briefing-room/presidential-actions/2021/01/27/executive-order-on-tackling-the-climate-crisis-at-home-and-abroad/. Accessed: November 14, 2022.



Appendix A. Project Layouts

This page left intentionally blank.

INDEX OF PLANS

STATE OF CALIFORNIA

DEPARTMENT OF TRANSPORTATION

PROJECT PLANS FOR CONSTRUCTION ON

STATE HIGHWAY

IN HUMBOLDT COUNTY AT VARIOUS LOCATIONS FROM MENDOCINO COUNTY BORDER TO EEL RIVER BRIDGE #04-16R

TO BE SUPPLEMENTED BY STANDARD PLANS DATED 2022

Dist	COUNTY	ROUTE	POST MILES TOTAL PROJECT	SHEET No.	TOTAL SHEETS
01	HUM	101	2.4-M53.9	1	77



LOCATION MAP

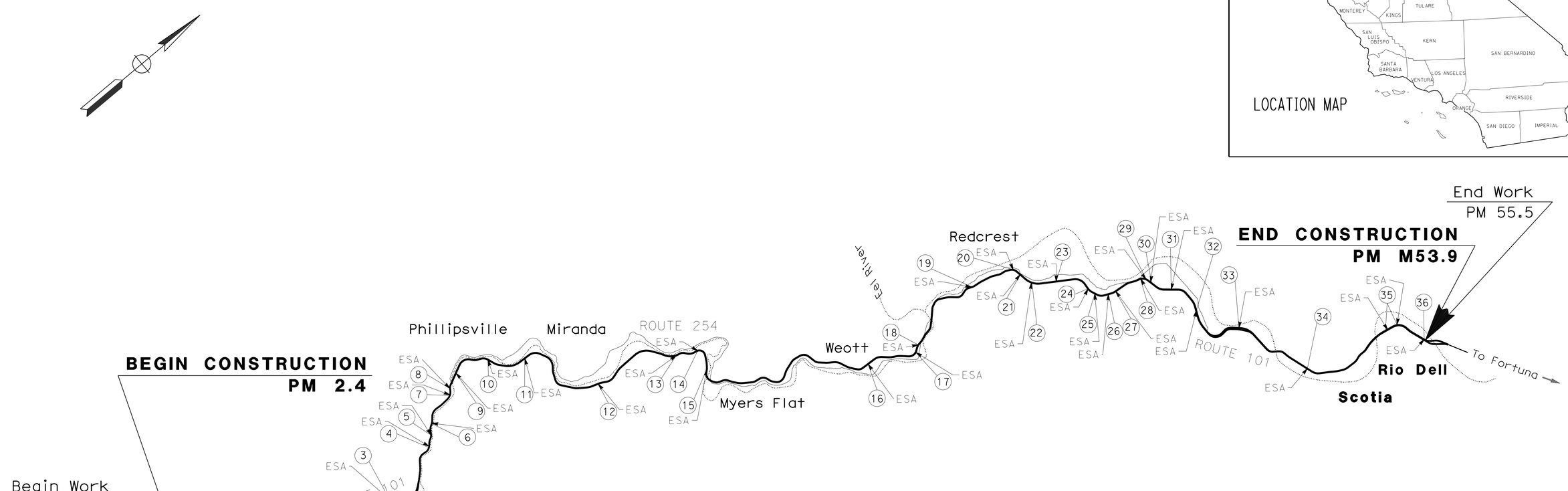

THE CONTRACTOR SHALL POSSESS THE CLASS (OR CLASSES) OF LICENSE AS SPECIFIED IN THE "NOTICE TO BIDDERS."

LOCATIONS OF CONSTRUCTION

Loc No.	PM	Loc No.	PM	Loc No.	PM
		DS 13	26.16	DS 26	42.12
DS 1	2.40	DS 14	26.78	DS 27	42.34
DS 2	7.51	DS 15	27.52	DS 28	43.17
DS 3	13.39	DS 16	33.23	DS 29A	43.35
DS 4	15.64	DS 17	34.77	DS 29B	43.37
DS 5	16.09	DS 18	35.00	DS 30	43.54
DS 6	16.44	DS 19	37.64	DS 31	44.17
DS 7	17.54	DS 20	39.01	DS 32	45.25
DS 8	17.76	DS 21	39.23	DS 33	47.01
DS 9	18.25	DS 22	39.65	DS 34	49.86
DS 10	19.43	DS 23	40.38	DS 35A	52.92
DS 11	20.63	DS 24	41.45	DS 35B	52.92
DS 12	23.46	DS 25	41.69	DS 36	53.85

NO SCALE

PROJECT ENGINEER DATE
REGISTERED CIVIL ENGINEER

REGISTERED PROFESSIONAL ENGINEER — No. Exp. CIVIL — STATE OF CALIFORNIA

PLANS APPROVAL DATE

THE STATE OF CALIFORNIA OR ITS OFFICERS OR AGENTS SHALL NOT BE RESPONSIBLE FOR THE ACCURACY OR COMPLETENESS OF SCANNED COPIES OF THIS PLAN SHEET.

CONTRACT No.	01-0H6401
PROJECT ID	0117000245

DESIGN ENGINEER: DANIEL ANDERSON
PROJECT MANAGER: CAREN COONROD

LAST REVISION 00-00-00
DATE PLOTTED => 5-APR-2023
TIME PLOTTED => 13:21

BORDER LAST REVISED 9/30/2012 | CALTRANS WEB SITE IS: HTTP//WWW.DOT.CA.GOV/ | RELATIVE BORDER SCALE IS IN INCHES 0 1 2 3 | USERNAME => s152443 DGN FILE => 0117000245ab000_TitleSheet.dgn | UNIT 0312 | PROJECT NUMBER & PHASE 00000000001

Dist	COUNTY	LOCATION CODE	POST MILES TOTAL PROJECT	SHEET No.	TOTAL SHEETS
01	HUM	101			77

REGISTERED CIVIL ENGINEER DATE

PLANS APPROVAL DATE

REGISTERED PROFESSIONAL ENGINEER No. Exp. CIVIL STATE OF CALIFORNIA

THE STATE OF CALIFORNIA, ITS OFFICERS OR AGENTS SHALL NOT BE RESPONSIBLE FOR THE ACCURACY OR COMPLETENESS OF SCANNED COPIES OF THIS PLAN SHEET.

PRELIMINARY DESIGN ONLY FOR REVIEW

NOTE:

ELBOW ANGLE IS APPROXIMATE, FIELD VERIFY PRIOR TO PROCUREMENT.

POTENTIALLY A PERMEANT DRAINAGE EASEMENT WILL NEED TO BE ACQUIRED

PREDICTED DSA CALCULATED BY ENGINEER SERVES AS SUGGESTION AND IS PRONE TO CHANGE DURING CONSTRUCTION

PDE: PROPOSED PERMANENT DRAINAGE EASAMENT

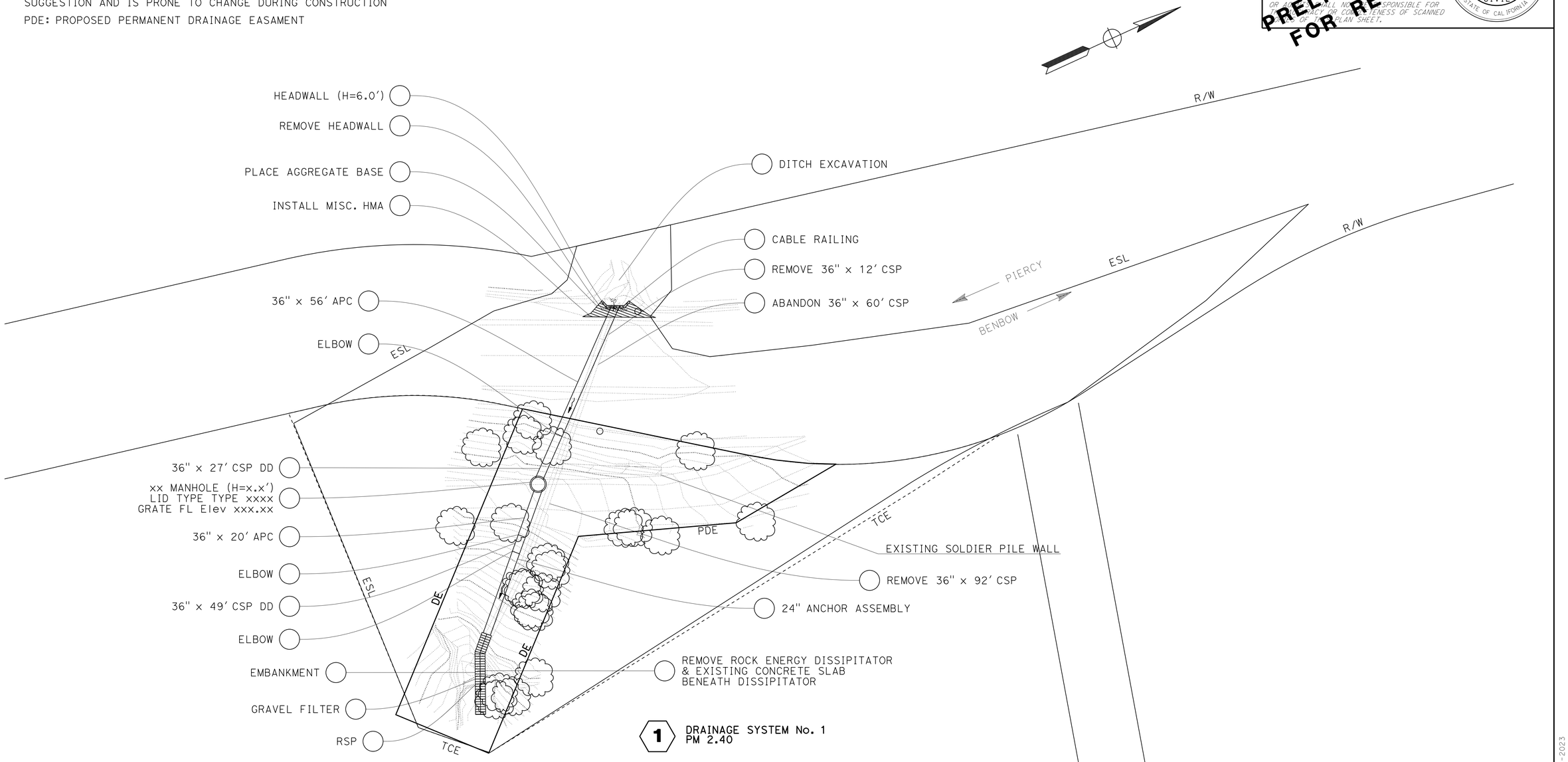

1 DRAINAGE SYSTEM No. 1
PM 2.40

RICHARDSON GROVE SP
APN: 033-251-001

DRAINAGE PLAN

SCALE: 1" = 20'

D-1

CALCULATED-DESIGNED BY

CHECKED BY

Daniel Anderson

REVISED BY

DATE REVISED

FUNCTIONAL SUPERVISOR

Tony Zalik

STATE OF CALIFORNIA - DEPARTMENT OF TRANSPORTATION

Caltrans

LAST REVISION 03-10-23

DATE PLOTTED => 5-APR-2023
TIME PLOTTED => 13:21

BORDER LAST REVISED 8/5/2020

USERNAME => s152443
DGN FILE => 01170002451a000_PM 02.40.dgn

RELATIVE BORDER SCALE IS IN INCHES 0 1 2 3

UNIT 0312

PROJECT NUMBER & PHASE 01160000351

Dist	COUNTY	LOCATION CODE	POST MILES TOTAL PROJECT	SHEET No.	TOTAL SHEETS
01	HUM	101			77

REGISTERED CIVIL ENGINEER DATE

PLANS APPROVAL DATE

THE STATE OF CALIFORNIA, ITS OFFICERS OR AGENTS SHALL NOT BE RESPONSIBLE FOR THE ACCURACY OR COMPLETENESS OF SCANNED COPIES OF THIS PLAN SHEET.

REGISTERED PROFESSIONAL ENGINEER No. Exp. CIVIL STATE OF CALIFORNIA

PRELIMINARY DESIGN FOR REVIEW ONLY

NOTE:

ELBOW ANGLE IS APPROXIMATE, FIELD VERIFY PRIOR TO PROCUREMENT.

CUT AND COVER INSTALLATION WILL REQUIRE AN ENGINEERING SHORING PLAN TO INSTALL 42" CSP THAT TRAVELS UNDER ROUTE 101. DEPTH OF CUT IS APPROX. 25 FT.

A TCE WILL BE OBTAINED FOR ACCESS TO OUTLET AND STAGING

PDE: PERMANENT DRAINAGE EASAMENT

OWNERS OF THE UTILITIES SHOWN ARE: PG&E AND FRONTIER COMMUNICATION

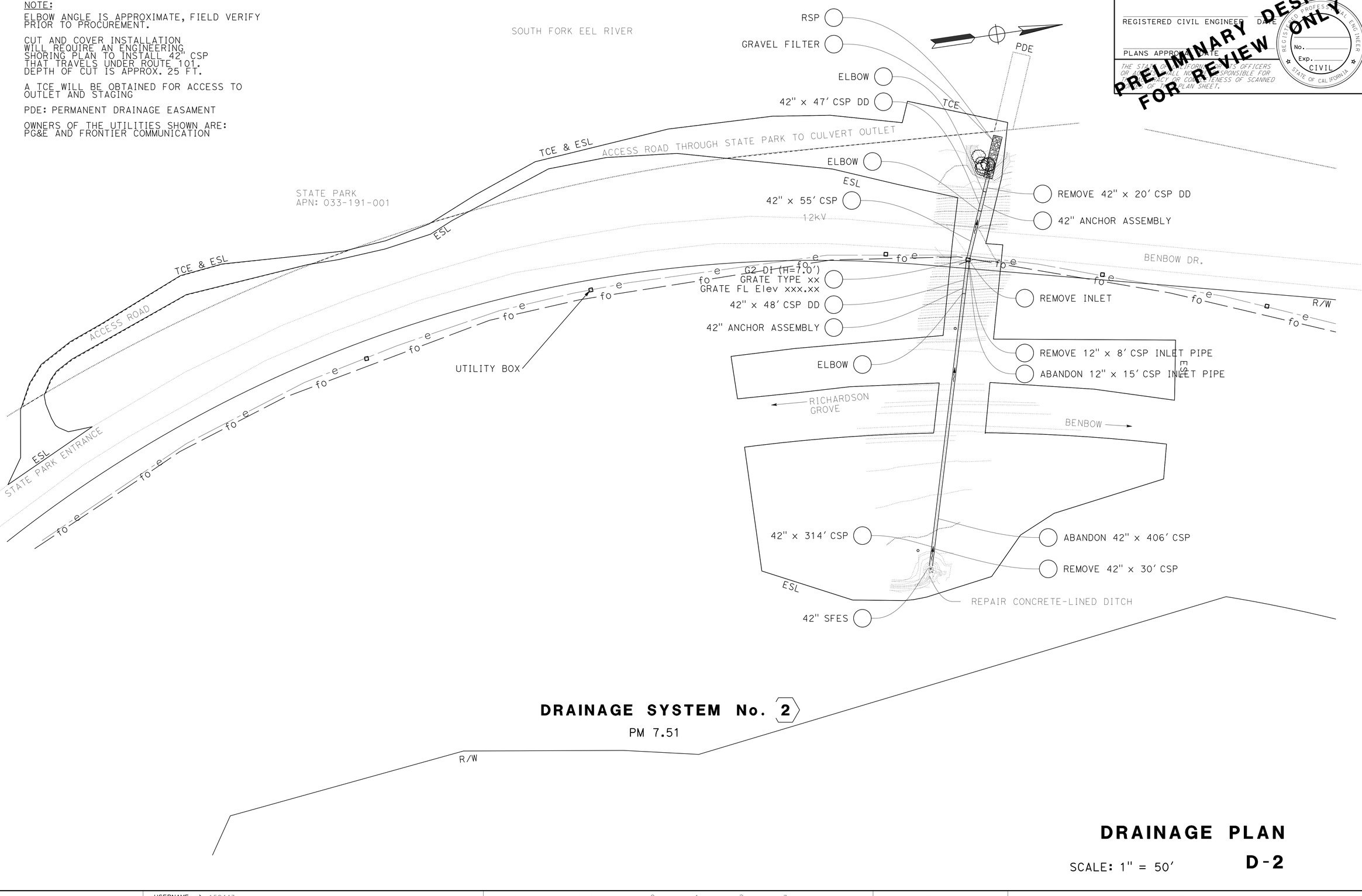

DRAINAGE SYSTEM No. 2

PM 7.51

DRAINAGE PLAN

SCALE: 1" = 50'

D-2

REVISED BY | DATE REVISED

Daniel Anderson

CALCULATED-DESIGNED BY | CHECKED BY

FUNCTIONAL SUPERVISOR

Tony Zalik

STATE OF CALIFORNIA - DEPARTMENT OF TRANSPORTATION

Caltrans

LAST REVISION 03-10-23

DATE PLOTTED => 5-APR-2023

TIME PLOTTED => 13:21

BORDER LAST REVISED 8/5/2020

USERNAME => s152443

DGN FILE => 01170000245ia000_PM 07.51.dgn

RELATIVE BORDER SCALE IS IN INCHES 0 1 2 3

UNIT 0312

PROJECT NUMBER & PHASE 01160000351

Dist	COUNTY	LOCATION CODE	POST MILES TOTAL PROJECT	SHEET No.	TOTAL SHEETS
01	HUM	101			77

REGISTERED CIVIL ENGINEER DATE

PLANS APPROVAL DATE

THE STATE OF CALIFORNIA, ITS OFFICERS OR AGENTS SHALL NOT BE RESPONSIBLE FOR THE ACCURACY OR COMPLETENESS OF SCANNED IMAGES OF THIS PLAN SHEET.

REGISTERED PROFESSIONAL ENGINEER No. Exp. CIVIL STATE OF CALIFORNIA

PRELIMINARY DESIGN ONLY FOR REVIEW

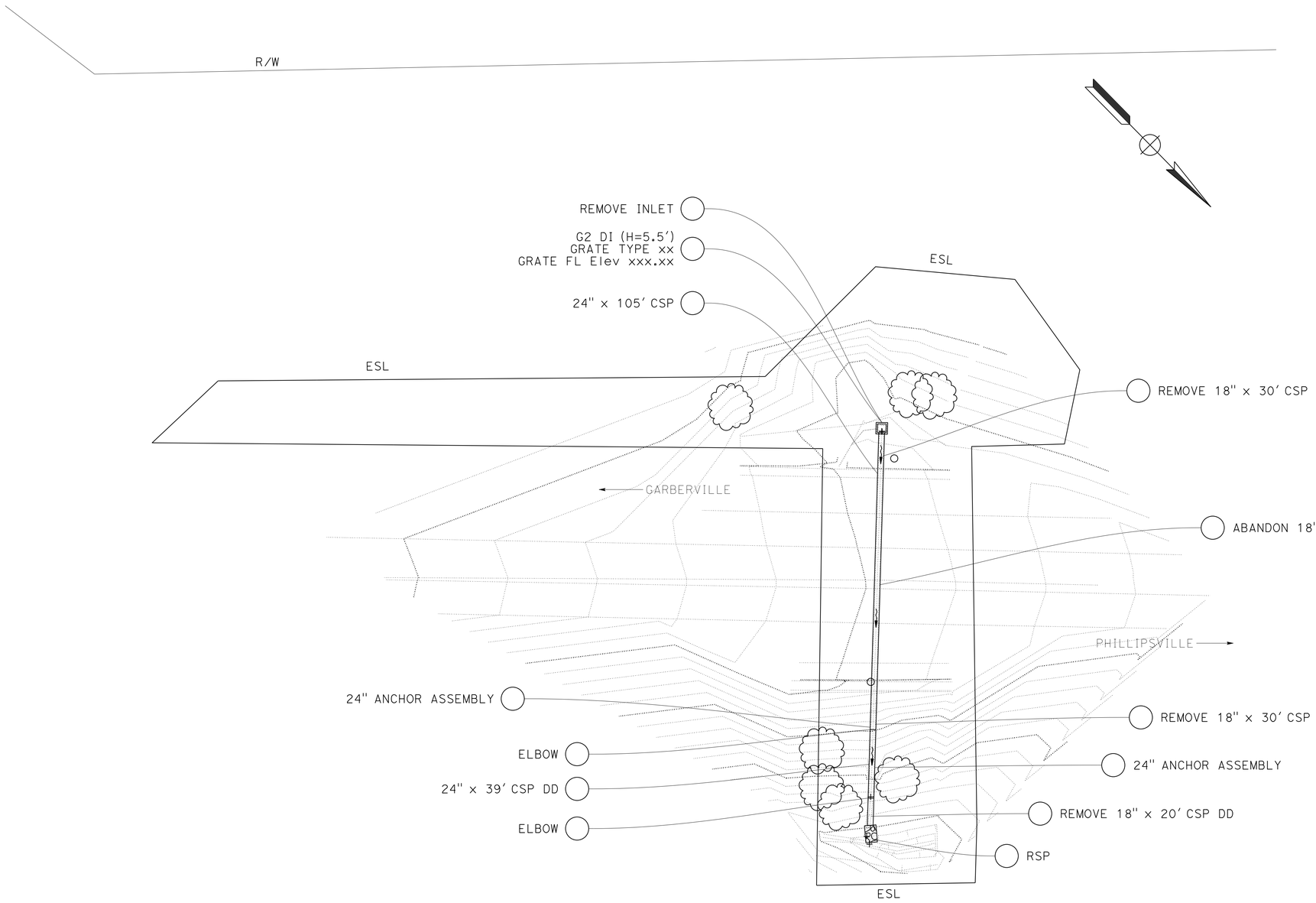

3 DRAINAGE SYSTEM No. 3
PM 13.39

DRAINAGE PLAN

SCALE: 1" = 20'

D-3

REVISED BY | DATE REVISED

CALCULATED-DESIGNED BY | CHECKED BY

Daniel Anderson

FUNCTIONAL SUPERVISOR

Tony Zalik

STATE OF CALIFORNIA - DEPARTMENT OF TRANSPORTATION

Caltrans

LAST REVISION 03-10-23 | DATE PLOTTED => 5-APR-2023 | TIME PLOTTED => 13:21

BORDER LAST REVISED 8/5/2020 | USERNAME => s152443 | DGN FILE => 0117000245ia000_PM 13.39.dgn | RELATIVE BORDER SCALE IS IN INCHES 0 1 2 3 | UNIT 0312 | PROJECT NUMBER & PHASE 01160000351

Dist	COUNTY	LOCATION CODE	POST MILES TOTAL PROJECT	SHEET No.	TOTAL SHEETS
01	HUM	101			77

REGISTERED CIVIL ENGINEER DATE

PLANS APPROVAL DATE

THE STATE OF CALIFORNIA, ITS OFFICERS OR AGENTS SHALL NOT BE RESPONSIBLE FOR THE ACCURACY OR COMPLETENESS OF SCANNED IMAGES OF THIS PLAN SHEET.

REGISTERED PROFESSIONAL ENGINEER
No.
Exp.
CIVIL
STATE OF CALIFORNIA

PRELIMINARY DESIGN ONLY FOR REVIEW

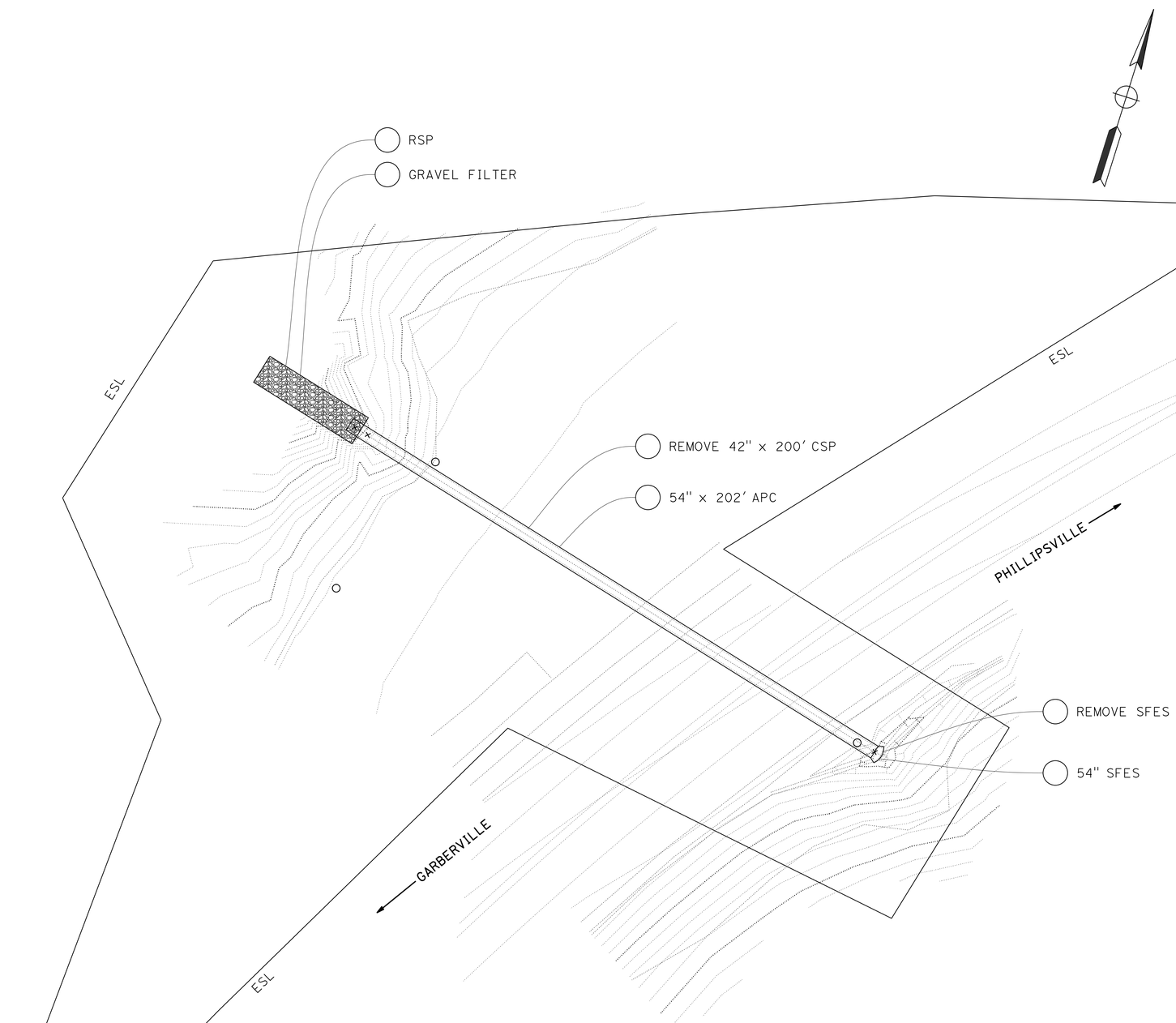

DRAINAGE SYSTEM No. 4

PM 15.64

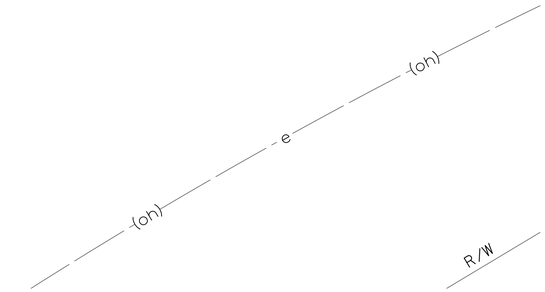

DRAINAGE PLAN

SCALE: 1" = 20'

D-4

STATE OF CALIFORNIA - DEPARTMENT OF TRANSPORTATION
Caltrans

FUNCTIONAL SUPERVISOR: Tony Zalik

CALCULATED-DESIGNED BY: Daniel Anderson

CHECKED BY

REVISED BY | DATE REVISED

LAST REVISION | DATE PLOTTED => 03-10-23 | TIME PLOTTED => 5-APR-2023 13:21

BORDER LAST REVISED 8/5/2020

USERNAME => s152443
DGN FILE => 01170000245ia000_PM 15.64.dgn

RELATIVE BORDER SCALE IS IN INCHES 0 1 2 3

UNIT 0312

PROJECT NUMBER & PHASE 01160000351

Dist	COUNTY	LOCATION CODE	POST MILES TOTAL PROJECT	SHEET No.	TOTAL SHEETS
01	HUM	101			77

REGISTERED CIVIL ENGINEER DATE

PLANS APPROVAL DATE

THE STATE OF CALIFORNIA, ITS OFFICERS OR AGENTS SHALL NOT BE RESPONSIBLE FOR THE ACCURACY OR COMPLETENESS OF SCANNED COPIES OF THIS PLAN SHEET.

REGISTERED PROFESSIONAL ENGINEER No. Exp. CIVIL STATE OF CALIFORNIA

PRELIMINARY DESIGN ONLY FOR REVIEW

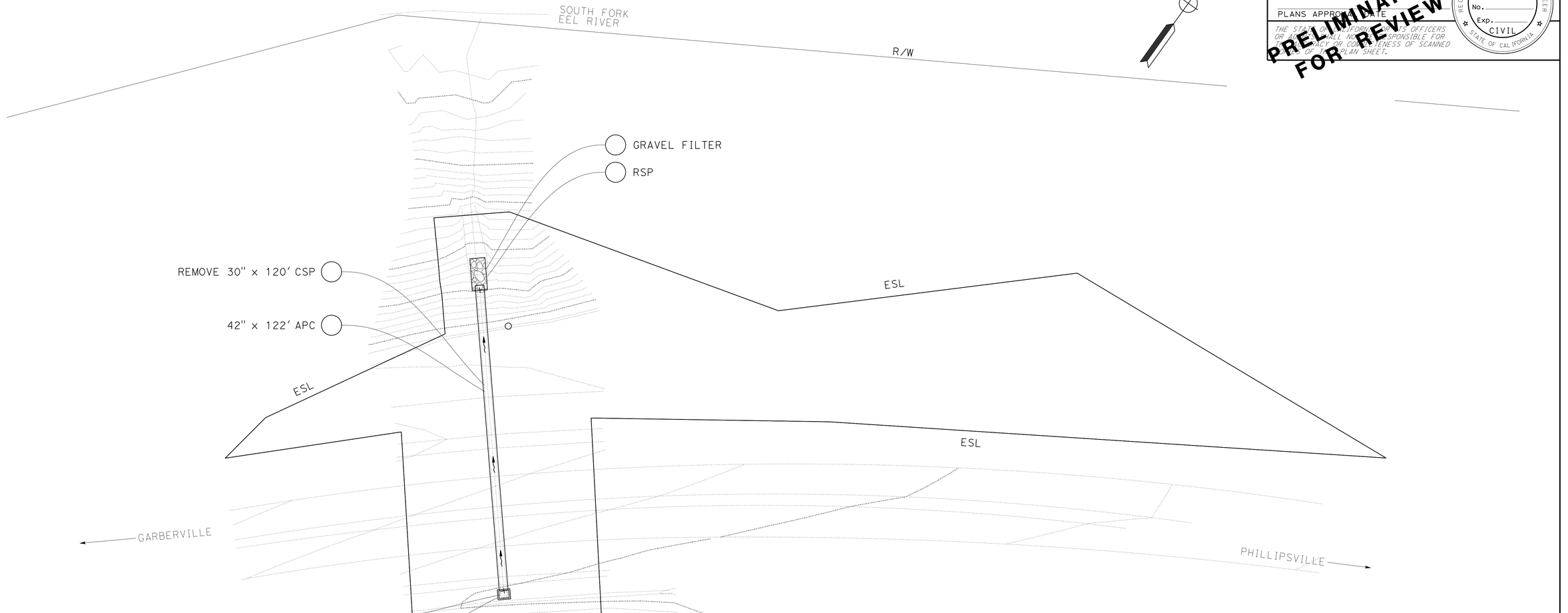

DRAINAGE SYSTEM No. 5

PM 16.09

DRAINAGE PLAN

SCALE: 1" = 20'

D-5

STATE OF CALIFORNIA - DEPARTMENT OF TRANSPORTATION

Caltrans

FUNCTIONAL SUPERVISOR: Tony Zalik

CALCULATED-DESIGNED BY

CHECKED BY

REVISED BY	DATE REVISED
Daniel Anderson	

LAST REVISION: DATE PLOTTED => 5-APR-2023 TIME PLOTTED => 13:21

03-10-23

BORDER LAST REVISED 8/5/2020

USERNAME => s152443
DGN FILE => 01170000245ia000_PM 16.09.dgn

RELATIVE BORDER SCALE IS IN INCHES 0 1 2 3

UNIT 0312

PROJECT NUMBER & PHASE 01160000351

Dist	COUNTY	LOCATION CODE	POST MILES TOTAL PROJECT	SHEET No.	TOTAL SHEETS
01	HUM	101			77

REGISTERED CIVIL ENGINEER DATE

PLANS APPROVAL DATE

REGISTERED PROFESSIONAL ENGINEER No. Exp. CIVIL STATE OF CALIFORNIA

THE STATE OF CALIFORNIA, ITS OFFICERS OR AGENTS SHALL NOT BE RESPONSIBLE FOR THE ACCURACY OR COMPLETENESS OF SCANNED VERSIONS OF THIS PLAN SHEET.

PRELIMINARY DESIGN ONLY FOR REVIEW

NOTE:

USE EXTREME CAUTION WHEN EXCVATING NEAR UTILITIES. THE LOCATION OF UTILITY LINES DRAWN ON THE PLANS IS APPROXIMATE UNLESS STATED OTHERWISE.

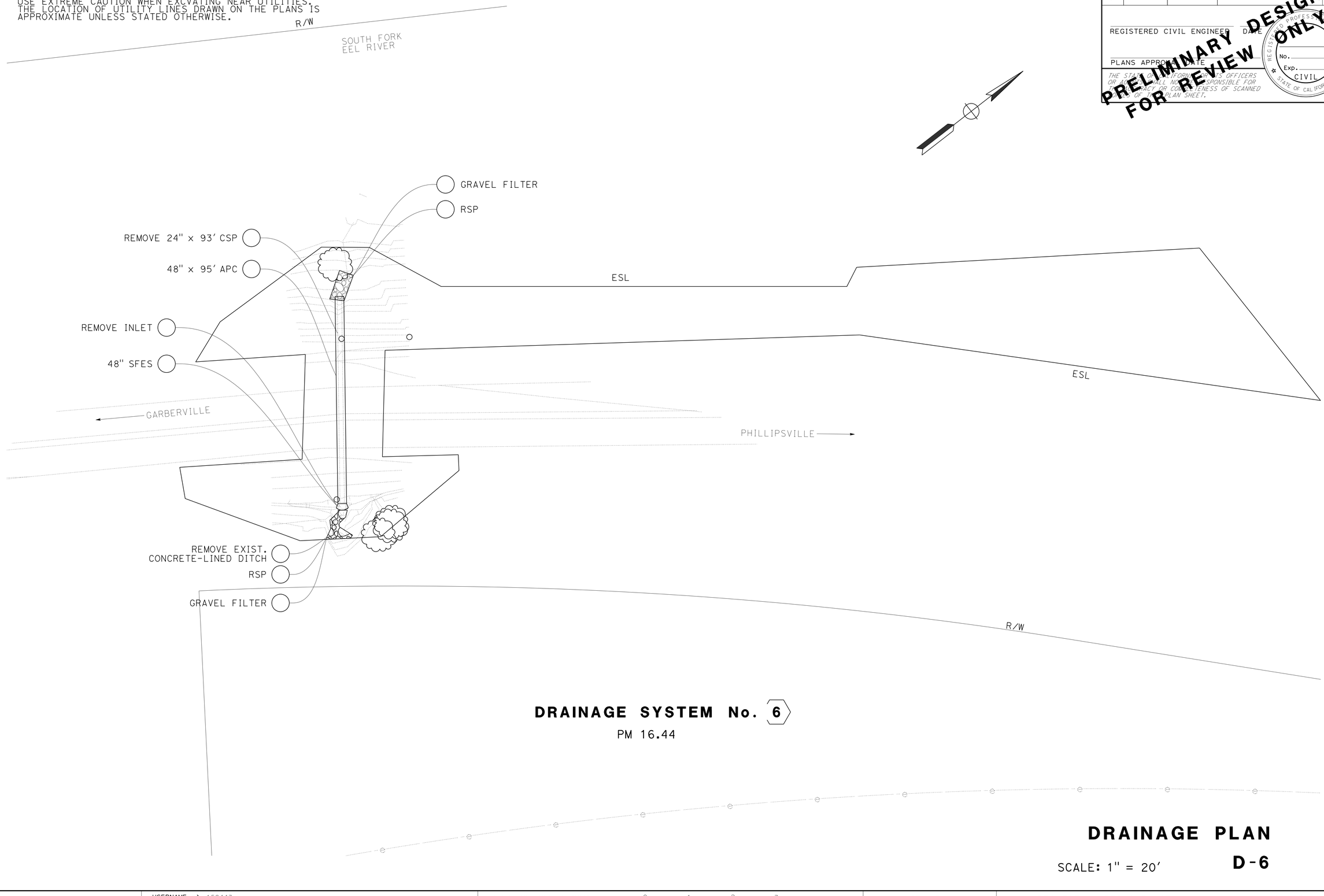

DRAINAGE SYSTEM No. 6

PM 16.44

DRAINAGE PLAN

SCALE: 1" = 20'

D-6

REVISED BY | DATE REVISED

Daniel Anderson

CALCULATED-DESIGNED BY | CHECKED BY

FUNCTIONAL SUPERVISOR

Tony Zalik

STATE OF CALIFORNIA - DEPARTMENT OF TRANSPORTATION

Caltrans

LAST REVISION 03-10-23 | DATE PLOTTED => 5-APR-2023 | TIME PLOTTED => 13:21

BORDER LAST REVISED 8/5/2020

USERNAME => s152443
DGN FILE => 0117000245ia000_PM 16.44.dgn

RELATIVE BORDER SCALE IS IN INCHES 0 1 2 3

UNIT 0312

PROJECT NUMBER & PHASE 01160000351

Dist	COUNTY	LOCATION CODE	POST MILES TOTAL PROJECT	SHEET No.	TOTAL SHEETS
01	HUM	101			77

REGISTERED CIVIL ENGINEER DATE

PLANS APPROVAL DATE

THE STATE OF CALIFORNIA, ITS OFFICERS OR AGENTS SHALL NOT BE RESPONSIBLE FOR THE ACCURACY OR COMPLETENESS OF SCANNED IMAGES OF THIS PLAN SHEET.

REGISTERED PROFESSIONAL ENGINEER No. Exp. CIVIL STATE OF CALIFORNIA

PRELIMINARY DESIGN ONLY FOR REVIEW

NOTE:

ELBOW ANGLE IS APPROXIMATE, FIELD VERIFY PRIOR TO PROCUREMENT.

CONTRACTOR WILL NEED TO ACQUIRE AN ENCROACHMENT PERMIT TO ACCESS OUTLET ON HOOKER CREEK RD.

OWNERS OF THE UTILITIES SHOWN ARE:
AT&T AND CALTRANS ELECTRICAL

USE EXTREME CAUTION WHEN EXCVATING NEAR UTILITIES. THE LOCATION OF UTILITY LINES DRAWN ON THE PLANS IS APPROXIMATE UNLESS STATED OTHERWISE.

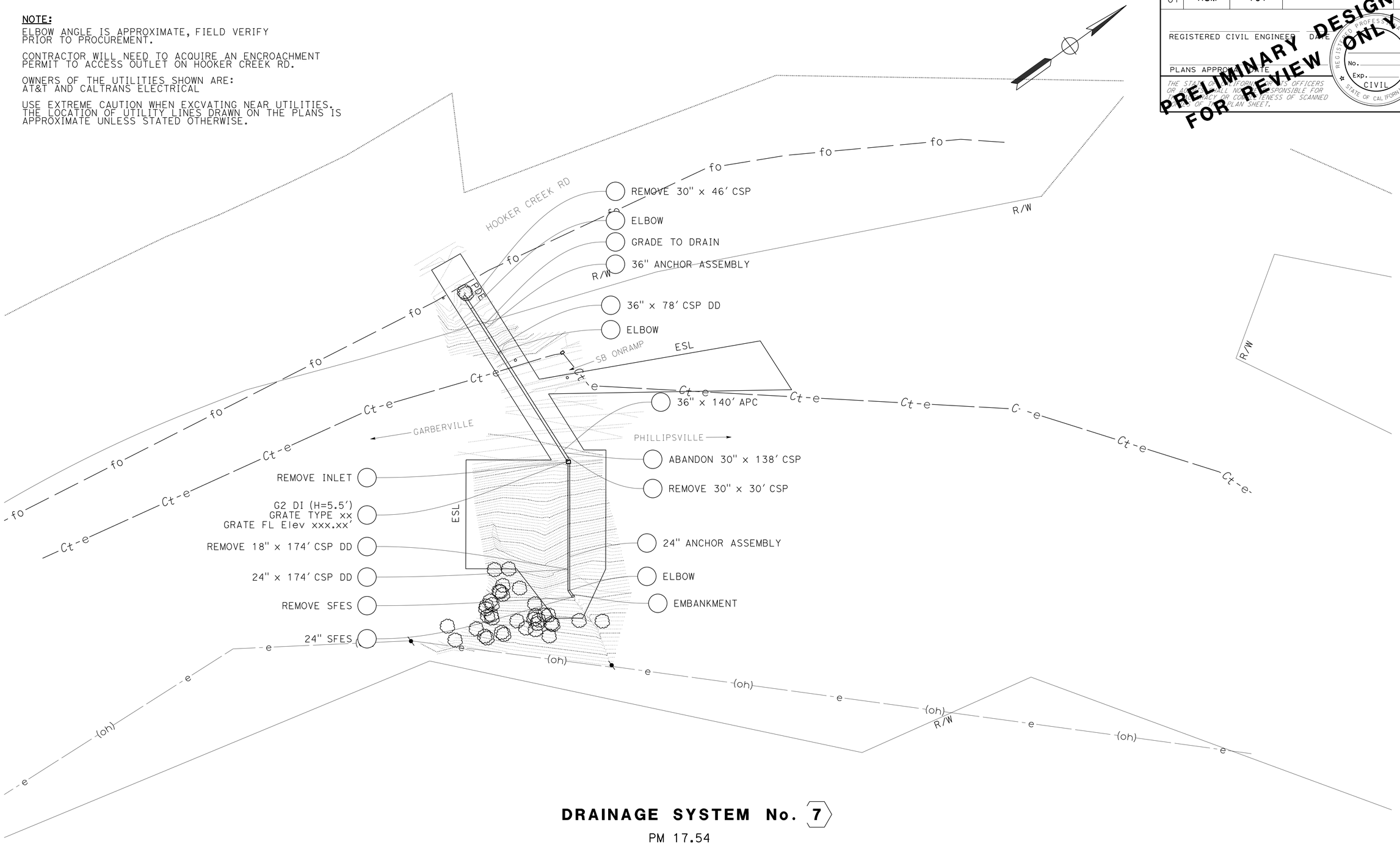

DRAINAGE SYSTEM No. 7

PM 17.54

DRAINAGE PLAN

SCALE: 1" = 50'

D-7

LAST REVISION 03-10-23 | DATE PLOTTED => 5-APR-2023 | TIME PLOTTED => 13:21

CALCULATED-DESIGNED BY | CHECKED BY | REVISED BY | DATE REVISED

Daniel Anderson

FUNCTIONAL SUPERVISOR: Tony Zalik

STATE OF CALIFORNIA - DEPARTMENT OF TRANSPORTATION

Caltrans

Dist	COUNTY	LOCATION CODE	POST MILES TOTAL PROJECT	SHEET No.	TOTAL SHEETS
01	HUM	101			77

REGISTERED CIVIL ENGINEER DATE

PLANS APPROVAL DATE

THE STATE OF CALIFORNIA, ITS OFFICERS OR AGENTS SHALL NOT BE RESPONSIBLE FOR THE ACCURACY OR COMPLETENESS OF SCANNED IMAGES OF THIS PLAN SHEET.

REGISTERED PROFESSIONAL ENGINEER No. Exp. CIVIL STATE OF CALIFORNIA

PRELIMINARY DESIGN FOR REVIEW ONLY

NOTE:
ELBOW ANGLE IS APPROXIMATE, FIELD VERIFY PRIOR TO PROCUREMENT.

REMOVE 18" x 115' CSP

PATCH REPAIR EXISTING CONCRETE LINED DITCH

TCE

ESL

36" x 90' APC

REMOVE 18" x 126' CSP

ESL

G2 DI (H=6.0')
GRATE TYPE xx
GRATE FL Elev xxx.xx'

36" x 110' APC

REMOVE 36" x 204' CSP

Ct-e

G2 DI (H=6.0')
GRATE TYPE xx
GRATE FL Elev xxx.xx'

REMOVE INLET

24" x 150' APC

REMOVE 18" x 150' CSP
(IF CONFLICTING WITH
PROPOSED DESIGN)

MANHOLE
G2 DI (H=5.0')
BOLT DOWN LID
GRATE FL Elev xxx.xx'

G2 DI (H=4.0')
GRATE TYPE xx
GRATE FL Elev xxx.xx'

24" x 36' APC

REMOVE INLET

G2 DI (H=4.5')
GRATE TYPE xx
GRATE FL Elev xxx.xx'

REMOVE 18" x 60' CSP

24" x 61' APC

REMOVE SFES

G2 DI (H=4.5')
GRATE TYPE xx
GRATE FL Elev xxx.xx'

24" x 100' APC

ELBOW

24" ANCHOR ASSEMBLY

24" x 48' CSP DD

REMOVE 18" x 49' CSP DD

24" SFES

REMOVE SFES

ESL

(oh)

e

DRAINAGE SYSTEM No. 8

PM 17.76

DRAINAGE PLAN

SCALE: 1" = 20'

D-8

STATE OF CALIFORNIA - DEPARTMENT OF TRANSPORTATION
Caltrans

FUNCTIONAL SUPERVISOR: Tony Zalik

CALCULATED-DESIGNED BY

CHECKED BY

Daniel Anderson

REVISED BY

DATE REVISED

LAST REVISION | DATE PLOTTED => 5-APR-2023
03-10-23 | TIME PLOTTED => 13:22

BORDER LAST REVISED 8/5/2020

USERNAME => s152443
DGN FILE => 01170002451a000_PM 17.76.dgn

RELATIVE BORDER SCALE IS IN INCHES 0 1 2 3

UNIT 0312

PROJECT NUMBER & PHASE 01160000351

Dist	COUNTY	LOCATION CODE	POST MILES TOTAL PROJECT	SHEET No.	TOTAL SHEETS
01	HUM	101			77

REGISTERED CIVIL ENGINEER DATE

PLANS APPROVAL DATE

THE STATE OF CALIFORNIA, ITS OFFICERS OR AGENTS SHALL NOT BE RESPONSIBLE FOR THE ACCURACY OR COMPLETENESS OF SCANNED IMAGES OF THIS PLAN SHEET.

REGISTERED PROFESSIONAL ENGINEER
No.
Exp.
CIVIL
STATE OF CALIFORNIA

PRELIMINARY DESIGN ONLY FOR REVIEW

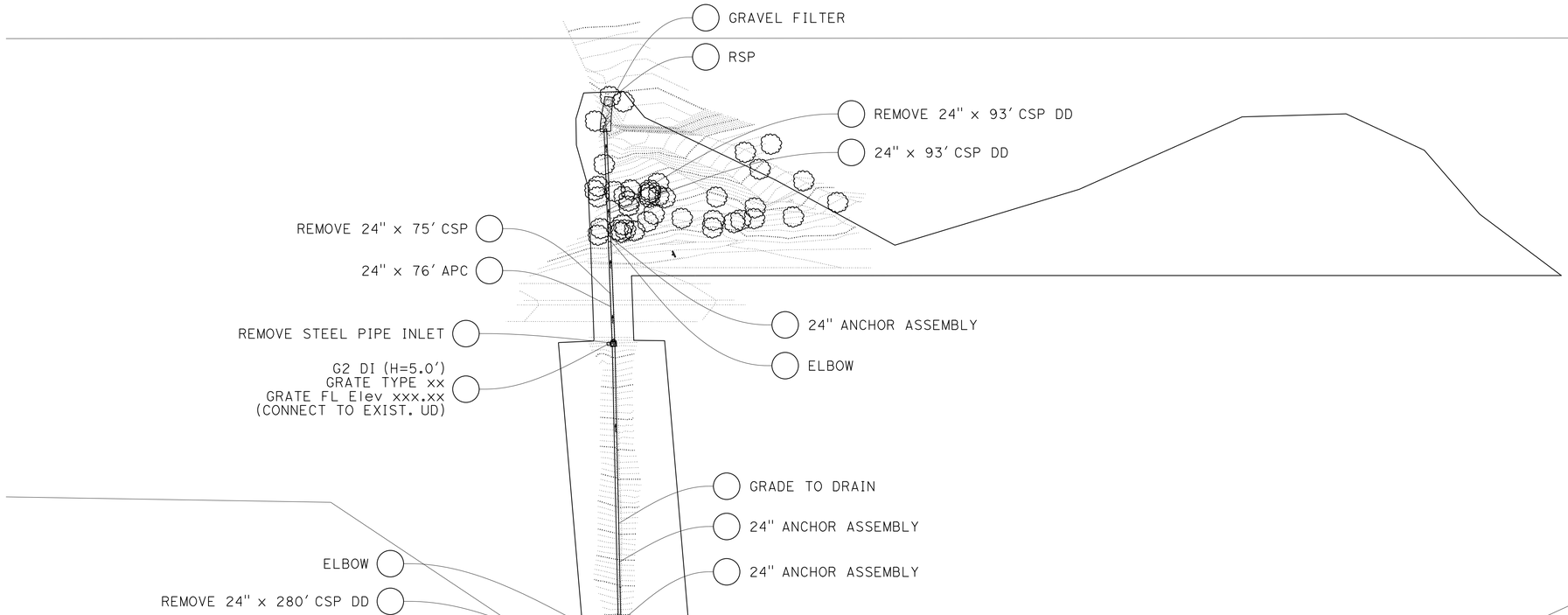

DRAINAGE SYSTEM No. 9

18.25

DRAINAGE PLAN

SCALE: 1" = 50'

D-9

CALCULATED-DESIGNED BY

CHECKED BY

REVISED BY

DATE REVISED

Daniel Anderson

FUNCTIONAL SUPERVISOR

Tony Zalik

STATE OF CALIFORNIA - DEPARTMENT OF TRANSPORTATION

Caltrans

LAST REVISION | DATE PLOTTED => 5-APR-2023
03-10-23 | TIME PLOTTED => 13:22

BORDER LAST REVISED 8/5/2020

USERNAME => s152443
DGN FILE => 01170000245ia000_PM 18.25.dgn

RELATIVE BORDER SCALE IS IN INCHES 0 1 2 3

UNIT 0312

PROJECT NUMBER & PHASE 01160000351

Dist	COUNTY	LOCATION CODE	POST MILES TOTAL PROJECT	SHEET No.	TOTAL SHEETS
01	HUM	101			77

REGISTERED CIVIL ENGINEER DATE

PLANS APPROVAL DATE

REGISTERED PROFESSIONAL ENGINEER No. Exp. CIVIL STATE OF CALIFORNIA

THE STATE OF CALIFORNIA, ITS OFFICERS OR AGENTS SHALL NOT BE RESPONSIBLE FOR THE ACCURACY OR COMPLETENESS OF SCANNED VERSIONS OF THIS PLAN SHEET.

PRELIMINARY DESIGN ONLY FOR REVIEW

NOTE:
PROPOSED CULVERT WILL REDUCE THE LENGTH OF SYSTEM BY 44'

POPOSED TRENCHLESS INSTALLATION IS 5' PARALLEL FROM EXISTING CULVERT ALIGNMENT

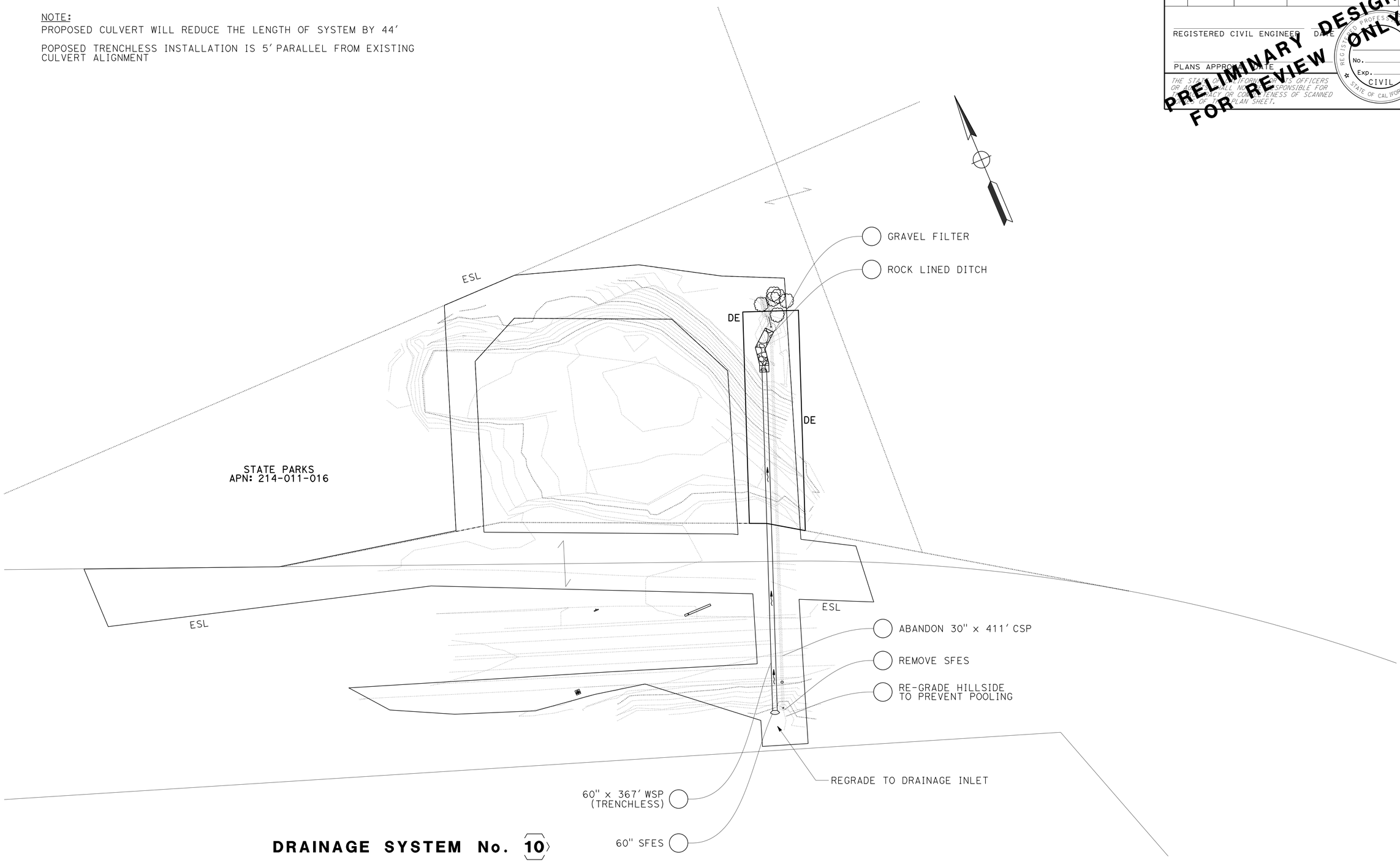

DRAINAGE SYSTEM No. 10

PM 19.43

DRAINAGE PLAN

SCALE: 1" = 50'

D-10

REVISED BY | DATE REVISED

Daniel Anderson

CALCULATED-DESIGNED BY | CHECKED BY

FUNCTIONAL SUPERVISOR

Tony Zalik

STATE OF CALIFORNIA - DEPARTMENT OF TRANSPORTATION

Caltrans

LAST REVISION 03-10-23 | DATE PLOTTED => 5-APR-2023 | TIME PLOTTED => 13:22

BORDER LAST REVISED 8/5/2020 | USERNAME => s152443 | DGN FILE => 01170000245ia000_PM 19.43.dgn | RELATIVE BORDER SCALE IS IN INCHES 0 1 2 3 | UNIT 0312 | PROJECT NUMBER & PHASE 01160000351

Dist	COUNTY	LOCATION CODE	POST MILES TOTAL PROJECT	SHEET No.	TOTAL SHEETS
01	HUM	101			77

REGISTERED CIVIL ENGINEER DATE

PLANS APPROVAL DATE

THE STATE OF CALIFORNIA, ITS OFFICERS OR AGENTS SHALL NOT BE RESPONSIBLE FOR THE ACCURACY OR COMPLETENESS OF SCANNED IMAGES OF THIS PLAN SHEET.

REGISTERED PROFESSIONAL ENGINEER No. Exp. CIVIL STATE OF CALIFORNIA

PRELIMINARY DESIGN ONLY FOR REVIEW

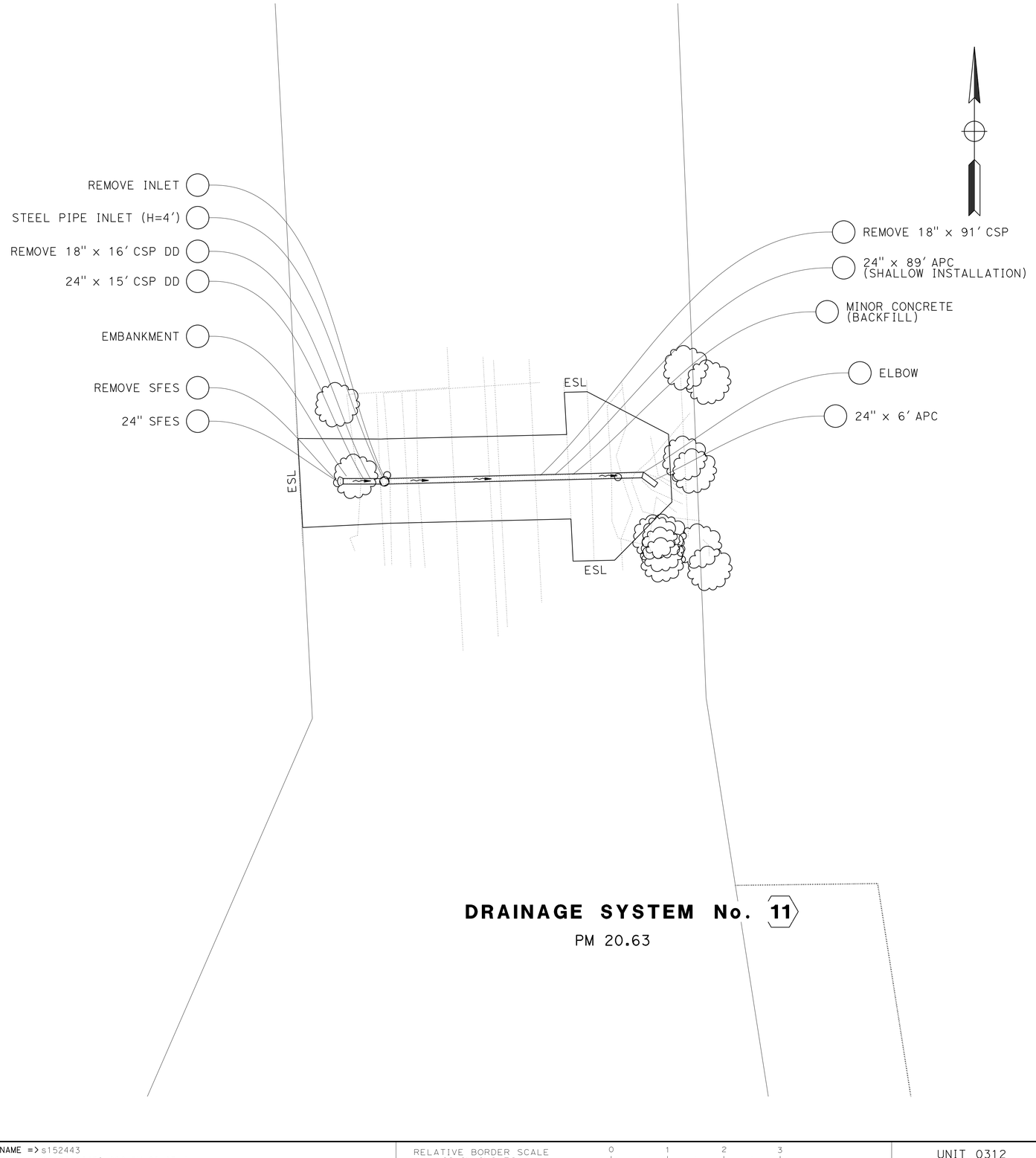

DRAINAGE SYSTEM No. 11

PM 20.63

DRAINAGE PLAN

SCALE: 1" = 20'

D-11

STATE OF CALIFORNIA - DEPARTMENT OF TRANSPORTATION

Caltrans

FUNCTIONAL SUPERVISOR: Tony Zalik

CALCULATED-DESIGNED BY

CHECKED BY

REVISED BY: Daniel Anderson

DATE REVISED

LAST REVISION 03-10-23

DATE PLOTTED => 5-APR-2023
TIME PLOTTED => 13:22

BORDER LAST REVISED 8/5/2020

USERNAME => s152443
DGN FILE => 01170002451a000_PM 20.63.dgn

RELATIVE BORDER SCALE IS IN INCHES 0 1 2 3

UNIT 0312

PROJECT NUMBER & PHASE 01160000351

Dist	COUNTY	LOCATION CODE	POST MILES TOTAL PROJECT	SHEET No.	TOTAL SHEETS
01	HUM	101			77

REGISTERED CIVIL ENGINEER DATE

PLANS APPROVAL DATE

THE STATE OF CALIFORNIA, ITS OFFICERS OR AGENTS SHALL NOT BE RESPONSIBLE FOR THE ACCURACY OR COMPLETENESS OF SCANNED IMAGES OF THIS PLAN SHEET.

REGISTERED PROFESSIONAL ENGINEER No. Exp. CIVIL STATE OF CALIFORNIA

PRELIMINARY DESIGN ONLY FOR REVIEW

NOTE:
ELBOW ANGLE IS APPROXIMATE, FIELD VERIFY PRIOR TO PROCUREMENT.

CONTRACTOR WILL NEED TO ACQUIRE AN ENCROACHMENT PERMIT IF MAPLE HILLS RD IS USED TO ACCESS THE OUTLET.

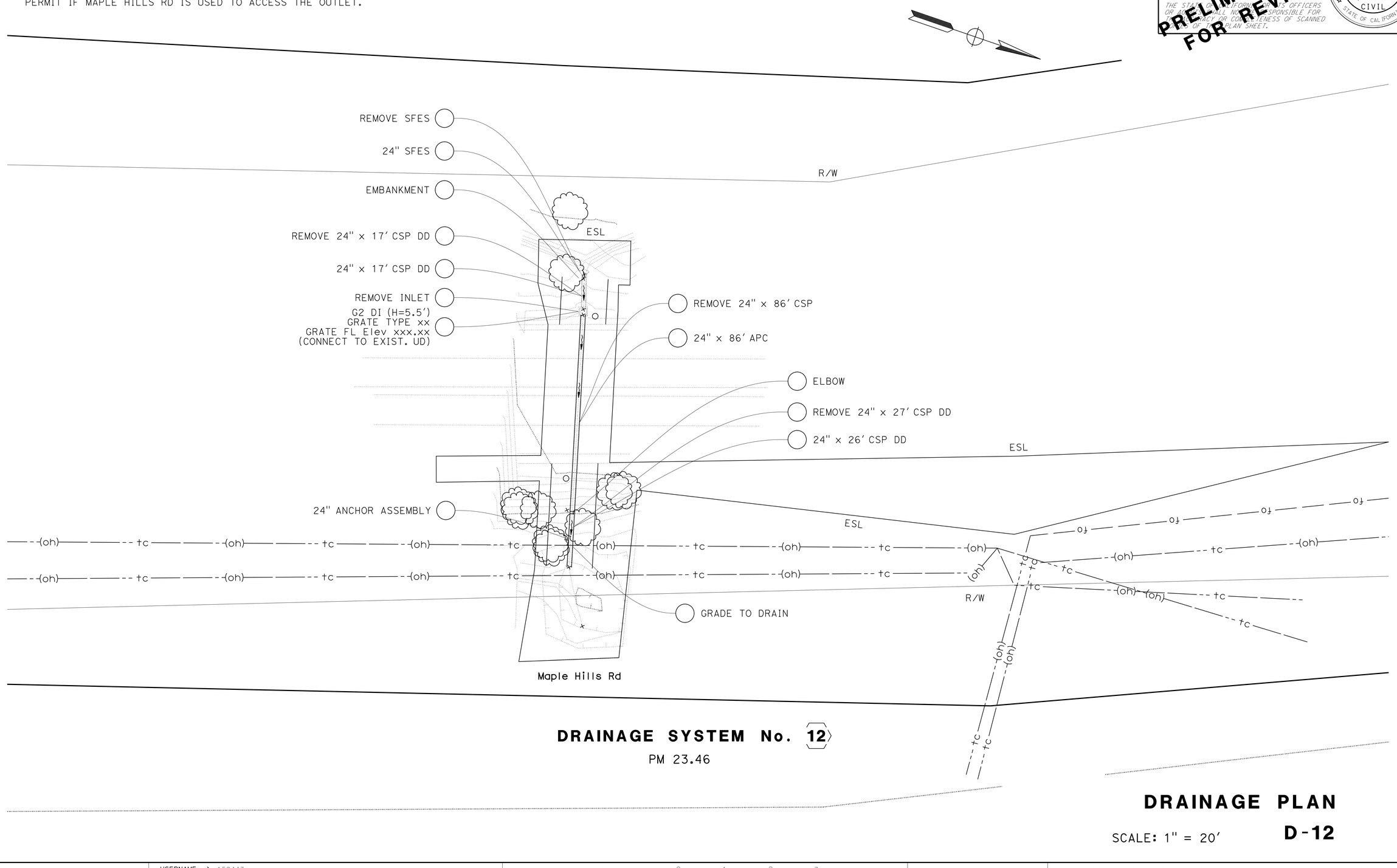

DRAINAGE SYSTEM No. 12

PM 23.46

DRAINAGE PLAN

SCALE: 1" = 20'

D-12

STATE OF CALIFORNIA - DEPARTMENT OF TRANSPORTATION
Caltrans

FUNCTIONAL SUPERVISOR: Tony Zalik
CALCULATED-DESIGNED BY:
CHECKED BY:
REVISED BY:
DATE REVISED:
Daniel Anderson

LAST REVISION | DATE PLOTTED => 5-APR-2023 | TIME PLOTTED => 13:22
03-10-23

BORDER LAST REVISED 8/5/2020 | USERNAME => s152443 | DGN FILE => 01170000245ia000_PM 23.46.dgn | RELATIVE BORDER SCALE IS IN INCHES 0 1 2 3 | UNIT 0312 | PROJECT NUMBER & PHASE 01160000351

Dist	COUNTY	LOCATION CODE	POST MILES TOTAL PROJECT	SHEET No.	TOTAL SHEETS
01	HUM	101			77

REGISTERED CIVIL ENGINEER DATE

PLANS APPROVAL DATE

THE STATE OF CALIFORNIA, ITS OFFICERS OR AGENTS SHALL NOT BE RESPONSIBLE FOR THE ACCURACY OR COMPLETENESS OF SCANNED IMAGES OF THIS PLAN SHEET.

REGISTERED PROFESSIONAL ENGINEER No. Exp. CIVIL STATE OF CALIFORNIA

PRELIMINARY DESIGN ONLY FOR REVIEW

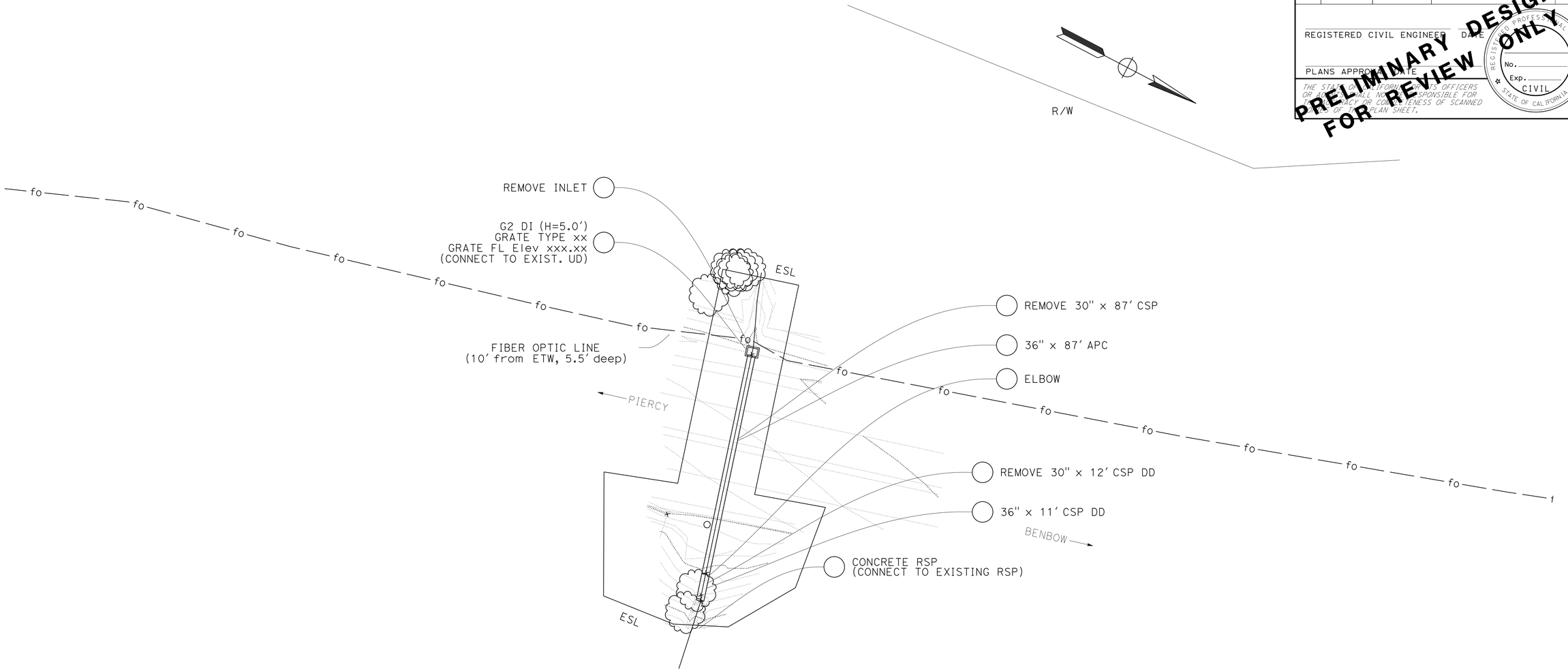

DRAINAGE SYSTEM No. 13

PM 26.16

DRAINAGE PLAN

SCALE: 1" = 20'

D-13

REVISED BY	
DATE REVISED	
CALCULATED-DESIGNED BY	Daniel Anderson
CHECKED BY	
FUNCTIONAL SUPERVISOR	Tony Zalik

STATE OF CALIFORNIA - DEPARTMENT OF TRANSPORTATION

Caltrans

LAST REVISION | DATE PLOTTED => 5-APR-2023
03-10-23 | TIME PLOTTED => 13:22

BORDER LAST REVISED 8/5/2020

USERNAME => s152443
DGN FILE => 01170000245ia000_PM 26.16.dgn

RELATIVE BORDER SCALE IS IN INCHES 0 1 2 3

UNIT 0312

PROJECT NUMBER & PHASE 01160000351

Dist	COUNTY	LOCATION CODE	POST MILES TOTAL PROJECT	SHEET No.	TOTAL SHEETS
01	HUM	101			77

REGISTERED CIVIL ENGINEER DATE

PLANS APPROVAL DATE

THE STATE OF CALIFORNIA, ITS OFFICERS OR AGENTS SHALL NOT BE RESPONSIBLE FOR THE ACCURACY OR COMPLETENESS OF SCANNED PLANS OF THIS PLAN SHEET.

REGISTERED PROFESSIONAL ENGINEER No. Exp. CIVIL STATE OF CALIFORNIA

PRELIMINARY DESIGN ONLY FOR REVIEW

NOTE:
ELBOW ANGLE IS APPROXIMATE, FIELD VERIFY PRIOR TO PROCUREMENT.

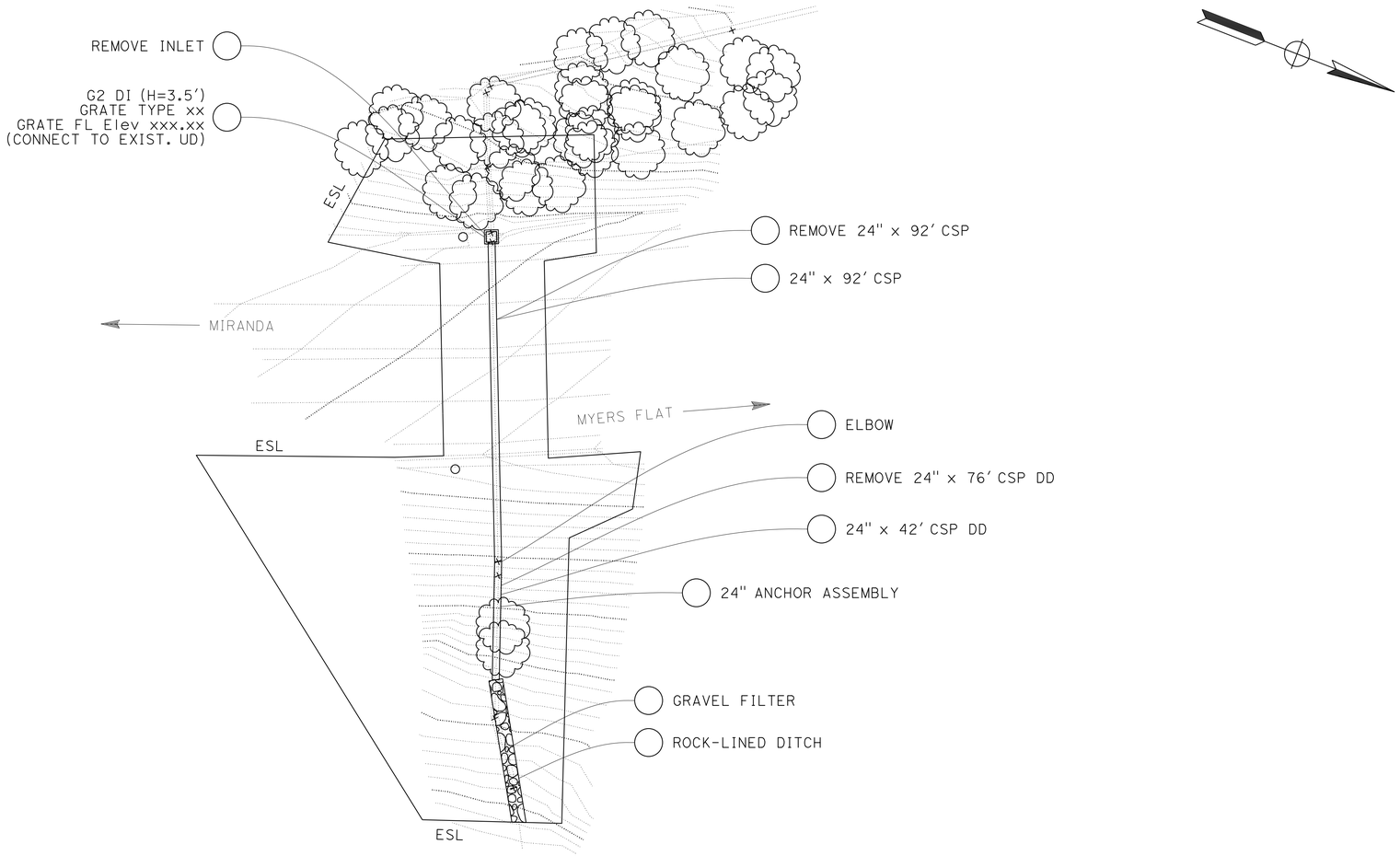

DRAINAGE SYSTEM No. 14

PM 26.78

R/W

STATE OF CA
APN: 211-384-004

DRAINAGE PLAN

SCALE: 1" = 20'

D-14

LAST REVISION DATE PLOTTED => 5-APR-2023
03-10-23 TIME PLOTTED => 13:22

STATE OF CALIFORNIA - DEPARTMENT OF TRANSPORTATION
Caltrans

FUNCTIONAL SUPERVISOR: Tony Zalik

CALCULATED-DESIGNED BY | CHECKED BY

REVISED BY | DATE REVISED

Daniel Anderson

BORDER LAST REVISED 8/5/2020

USERNAME => s152443
DGN FILE => 01170000245ia000_PM 26.78.dgn

RELATIVE BORDER SCALE IS IN INCHES 0 1 2 3

UNIT 0312

PROJECT NUMBER & PHASE 01160000351

Dist	COUNTY	LOCATION CODE	POST MILES TOTAL PROJECT	SHEET No.	TOTAL SHEETS
01	HUM	101			77

REGISTERED CIVIL ENGINEER DATE

PLANS APPROVAL DATE

THE STATE OF CALIFORNIA, ITS OFFICERS OR AGENTS SHALL NOT BE RESPONSIBLE FOR THE ACCURACY OR COMPLETENESS OF SCANNED COPIES OF THIS PLAN SHEET.

REGISTERED PROFESSIONAL ENGINEER No. Exp. CIVIL STATE OF CALIFORNIA

PRELIMINARY DESIGN ONLY FOR REVIEW

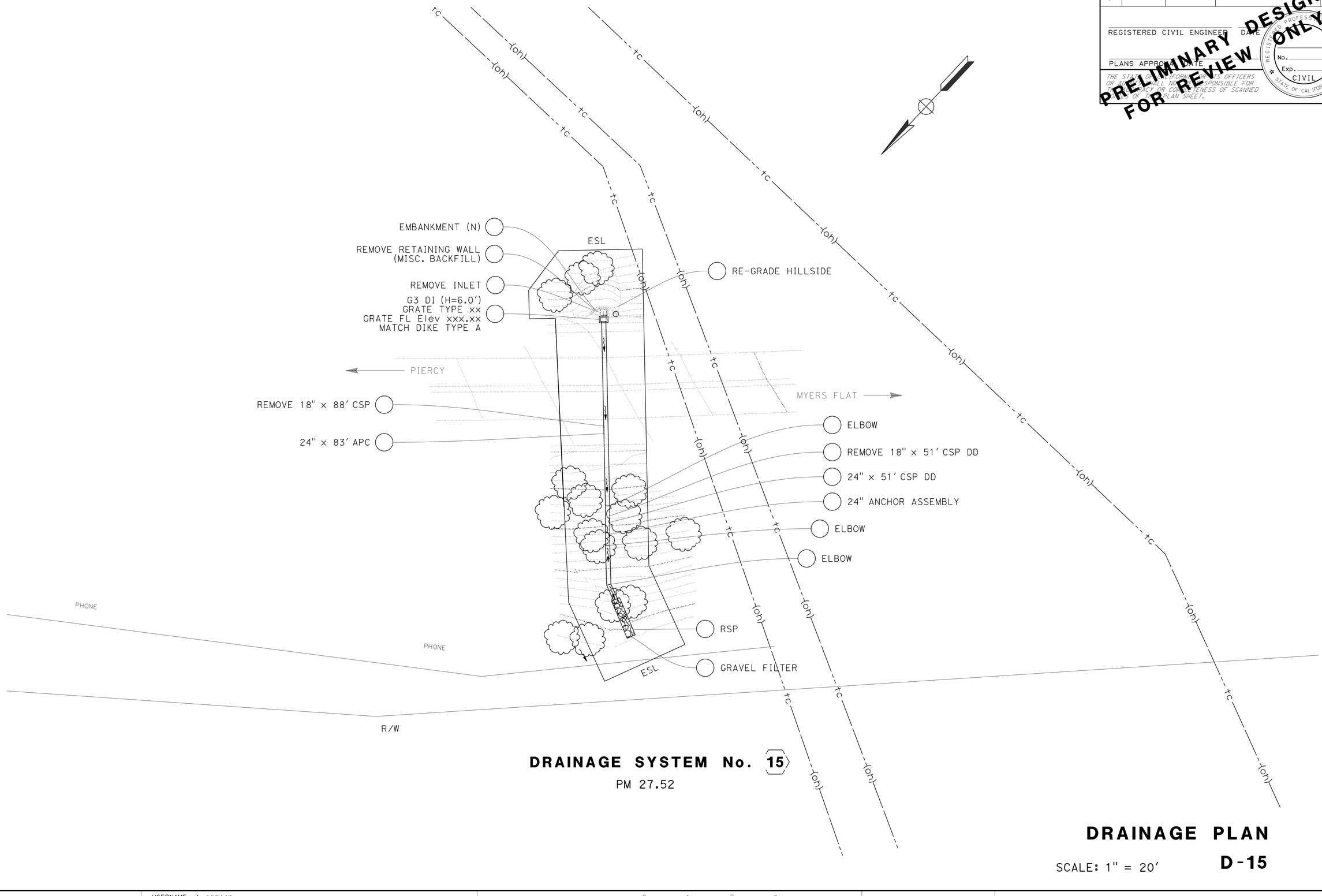

DRAINAGE SYSTEM No. 15

PM 27.52

DRAINAGE PLAN

SCALE: 1" = 20'

D-15

CALCULATED-DESIGNED BY

CHECKED BY

REVISED BY

DATE REVISED

Daniel Anderson

FUNCTIONAL SUPERVISOR

Tony Zalik

STATE OF CALIFORNIA - DEPARTMENT OF TRANSPORTATION

Caltrans

LAST REVISION 03-10-23

DATE PLOTTED => 5-APR-2023

TIME PLOTTED => 13:22

BORDER LAST REVISED 8/5/2020

USERNAME => s152443

DGN FILE => 0117000245ia000_PM 27.52.dgn

RELATIVE BORDER SCALE IS IN INCHES 0 1 2 3

UNIT 0312

PROJECT NUMBER & PHASE 01160000351

Dist	COUNTY	LOCATION CODE	POST MILES TOTAL PROJECT	SHEET No.	TOTAL SHEETS
01	HUM	101			77

REGISTERED CIVIL ENGINEER DATE

PLANS APPROVAL DATE

THE STATE OF CALIFORNIA, ITS OFFICERS OR AGENTS SHALL NOT BE RESPONSIBLE FOR THE ACCURACY OR COMPLETENESS OF SCANNED VERSIONS OF THIS PLAN SHEET.

REGISTERED PROFESSIONAL ENGINEER No. Exp. CIVIL STATE OF CALIFORNIA

PRELIMINARY DESIGN ONLY FOR REVIEW

NOTE:
CONTRACTOR WILL NEED TO ACQUIRE AN ENCROACHMENT PERMIT IF WORK WILL BE CONDUCTED OUTSIDE OF RW

EXCAVATION OF JUNCTION BOX IS EXPECTED TO BE 12' - 25' DEEP. ENGINEERED SHORING PLAN SHOULD BE EXPECTED

APPROXIMATE SURFACE INFORMATION ONLY. INCREASED AREA OF SURVEY WILL BE REQUIRED BEFORE RTL

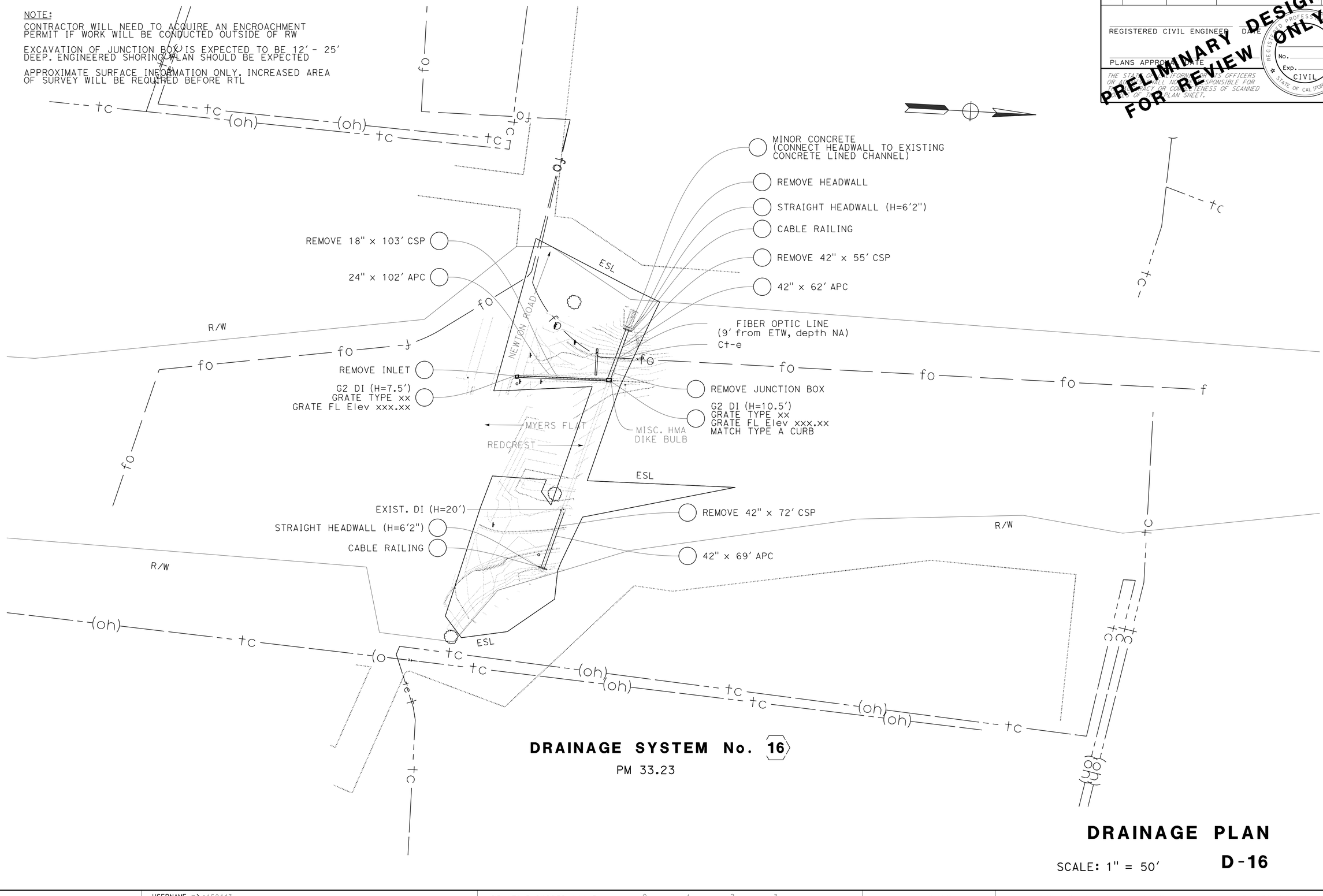

DRAINAGE SYSTEM No. 16

PM 33.23

DRAINAGE PLAN

SCALE: 1" = 50'

D-16

REVISED BY | DATE REVISED

Daniel Anderson

CALCULATED-DESIGNED BY | CHECKED BY

FUNCTIONAL SUPERVISOR

Tony Zalik

STATE OF CALIFORNIA - DEPARTMENT OF TRANSPORTATION

Caltrans

LAST REVISION 03-10-23

DATE PLOTTED => 5-APR-2023
TIME PLOTTED => 13:22

Dist	COUNTY	LOCATION CODE	POST MILES TOTAL PROJECT	SHEET No.	TOTAL SHEETS
01	HUM	101			77

REGISTERED CIVIL ENGINEER DATE

PLANS APPROVAL DATE

THE STATE OF CALIFORNIA, ITS OFFICERS OR AGENTS SHALL NOT BE RESPONSIBLE FOR THE ACCURACY OR COMPLETENESS OF SCANNED VERSIONS OF THIS PLAN SHEET.

REGISTERED PROFESSIONAL ENGINEER No. Exp. CIVIL STATE OF CALIFORNIA

PRELIMINARY DESIGN FOR REVIEW ONLY

NOTE:
ELBOW ANGLE IS APPROXIMATE, FIELD VERIFY PRIOR TO PROCUREMENT.

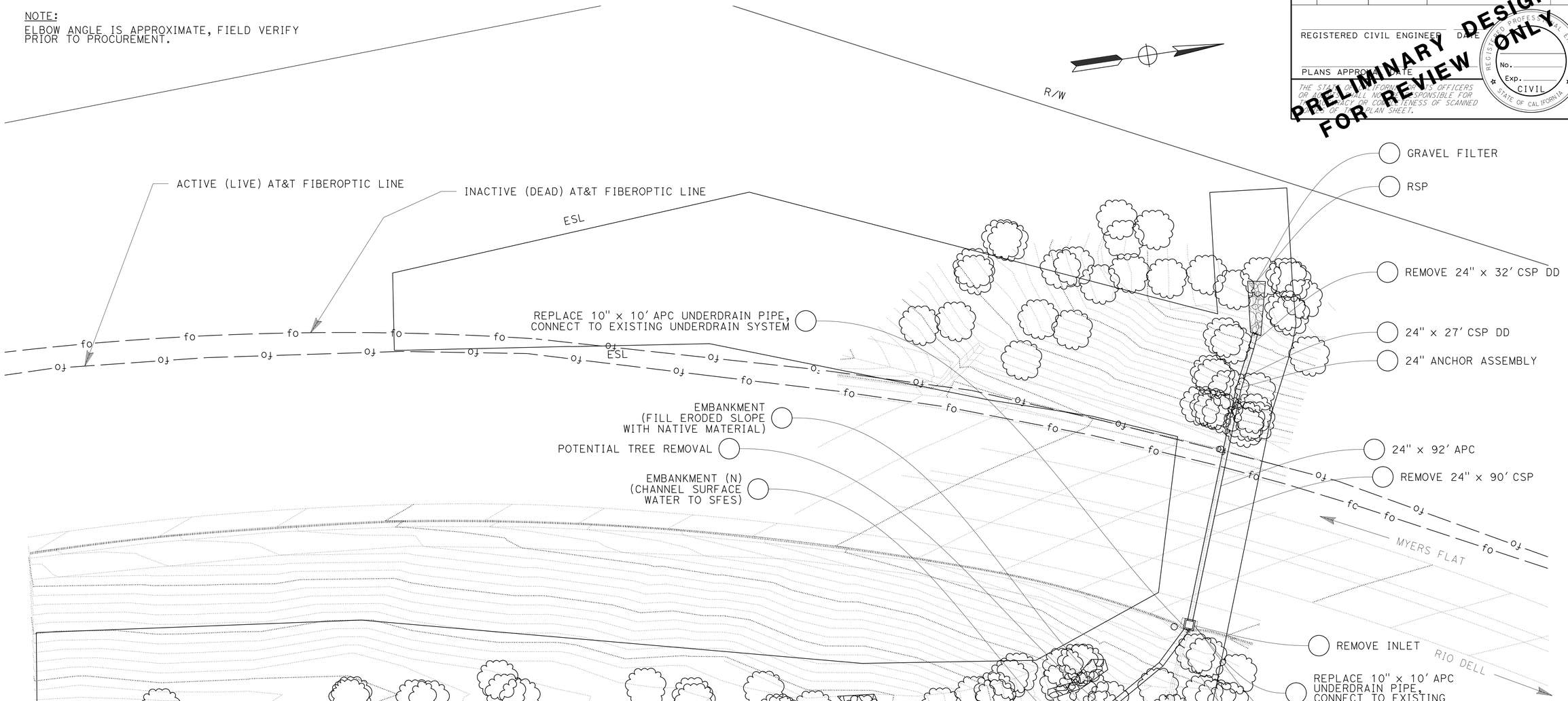

DRAINAGE SYSTEM No. 17

PM 34.77

DRAINAGE PLAN

SCALE: 1" = 20'

D-17

CALCULATED-DESIGNED BY

CHECKED BY

REVISED BY

DATE REVISED

Daniel Anderson

FUNCTIONAL SUPERVISOR

Tony Zalik

STATE OF CALIFORNIA - DEPARTMENT OF TRANSPORTATION

Caltrans

LAST REVISION | DATE PLOTTED => 5-APR-2023
03-10-23 | TIME PLOTTED => 13:22

BORDER LAST REVISED 8/5/2020

USERNAME => s152443
DGN FILE => 01170002451a000_PM 34.77.dgn

RELATIVE BORDER SCALE IS IN INCHES 0 1 2 3

UNIT 0312

PROJECT NUMBER & PHASE 01160000351

Dist	COUNTY	LOCATION CODE	POST MILES TOTAL PROJECT	SHEET No.	TOTAL SHEETS
01	HUM	101			77

REGISTERED CIVIL ENGINEER DATE

PLANS APPROVAL DATE

REGISTERED PROFESSIONAL ENGINEER No. Exp. CIVIL STATE OF CALIFORNIA

THE STATE OF CALIFORNIA, ITS OFFICERS OR AGENTS SHALL NOT BE RESPONSIBLE FOR THE ACCURACY OR COMPLETENESS OF SCANNED IMAGES OF THIS PLAN SHEET.

PRELIMINARY DESIGN ONLY FOR REVIEW

NOTE:

ABANDONED TELECOMMUNICATION (FIBEROPTIC CABLE) IS KNOWN TO PUNCTURE EXISTING CSP BELLOW GUARDRAIL ON WEST SIDE OF HIGHWAY 101, UTILITY RELOCATION OF MAY BE NECESSARY TO INSTALL CULVERT IN THE PROPER ALIGNMENT AND GRADE

NEW CROSS CULVERT SKEW ANGLE ALIGNMENT (18°47'26")

INSTALL NEW DRAINAGE INLET 10' SOUTH OF CURRENT LOCATION

REPLACE 10" PERFORATED CSP UNDERDRAIN IF CONDITION IS FOUND TO BE POOR DURING THE THE INSTALLATION OF NEW CUVLERT SYSTEM

LARGER SURVEY IS REQUIRED TO FIND PROPER OUTLET POINT

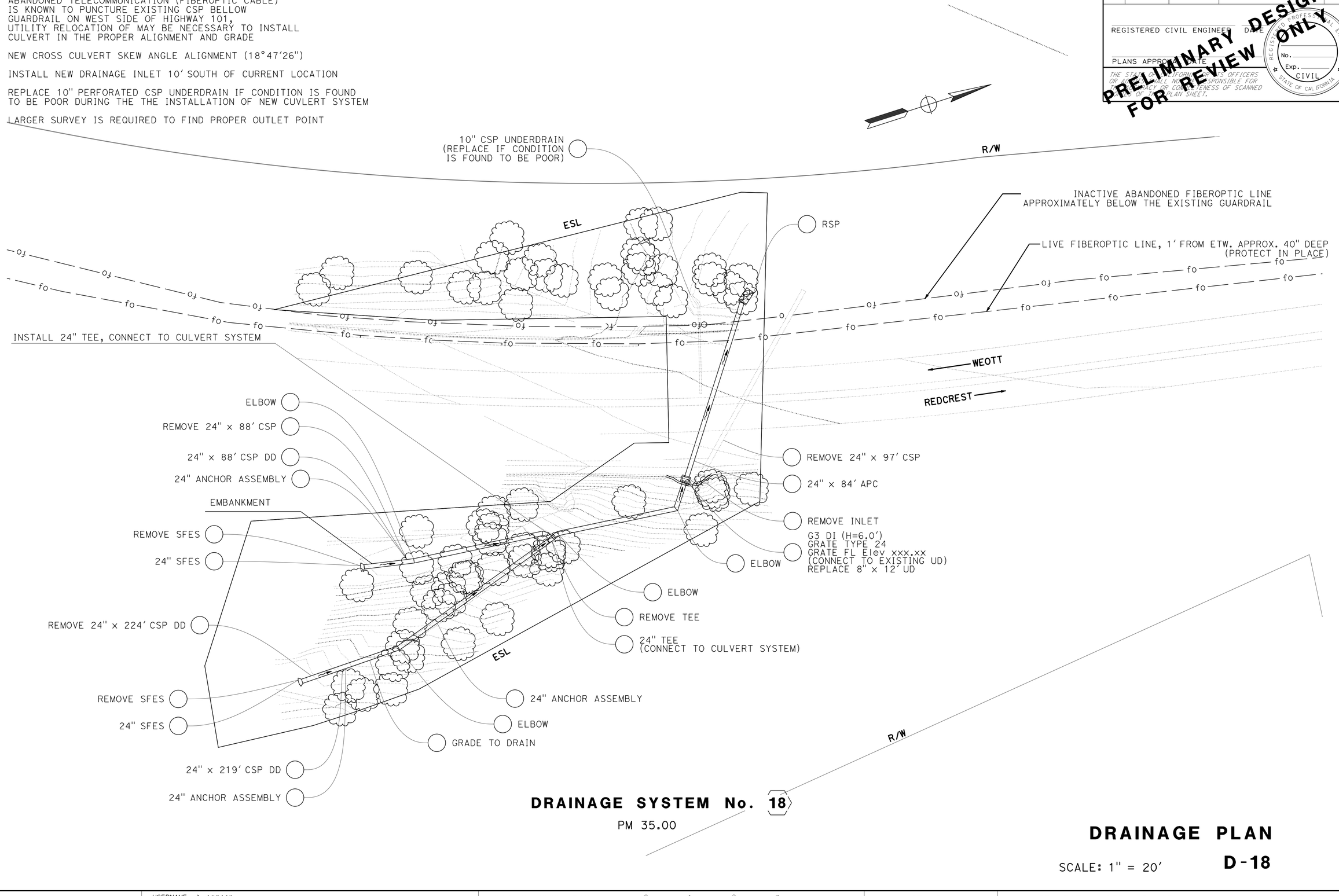

DRAINAGE SYSTEM No. 18

PM 35.00

DRAINAGE PLAN

SCALE: 1" = 20'

D-18

REVISED BY | DATE REVISED

CALCULATED-DESIGNED BY | CHECKED BY

Daniel Anderson

FUNCTIONAL SUPERVISOR

Tony Zalik

STATE OF CALIFORNIA - DEPARTMENT OF TRANSPORTATION

Caltrans

LAST REVISION | DATE PLOTTED => 5-APR-2023
03-10-23 | TIME PLOTTED => 13:22

BORDER LAST REVISED 8/5/2020

USERNAME => s152443
DGN FILE => 01170002451a000_PM 35.00.dgn

RELATIVE BORDER SCALE IS IN INCHES 0 1 2 3

UNIT 0312

PROJECT NUMBER & PHASE 01160000351

Dist	COUNTY	LOCATION CODE	POST MILES TOTAL PROJECT	SHEET No.	TOTAL SHEETS
01	HUM	101			77

REGISTERED CIVIL ENGINEER DATE

PLANS APPROVAL DATE

THE STATE OF CALIFORNIA, ITS OFFICERS OR AGENTS SHALL NOT BE RESPONSIBLE FOR THE ACCURACY OR COMPLETENESS OF SCANNED COPIES OF THIS PLAN SHEET.

REGISTERED PROFESSIONAL ENGINEER No. Exp. CIVIL STATE OF CALIFORNIA

PRELIMINARY DESIGN ONLY FOR REVIEW

REMOVE 18" x 9' CSP DD
24" x 5' CSP DD
ELBOW
REMOVE 18" x 54' CSP
24" x 54' APC
24" x 16' CSP DD
ELBOW
REMOVE 18" x 26' CSP DD
24" x 10' CSP DD
REMOVE SFES
24" SFES
REPLACE DI (IN KIND)
REMOVE 30" x 15' CSP
ABANDON 30" x 150' CSP
REMOVE 30" x 15' CSP
RSP

STATE PARKS
APN: 209-361-019

RIGHT TO ENTRY PERMIT

FILL FLOW LINE 4' VERTICALLY
REMOVE SFES
42" SFES
42" x 153' WSP (TRENCHLESS)
WEOTT
REDCREST
EMBANKMENT
REMOVE 30" x 42' CSP DD

STATE PARKS
APN: 209-361-020

RIGHT TO ENTRY PERMIT

DRAINAGE SYSTEM No. 19

PM 37.64

DRAINAGE PLAN

SCALE: 1" = 50'

D-19

REVISED BY
DATE REVISED
Daniel Anderson
CALCULATED-DESIGNED BY
CHECKED BY
FUNCTIONAL SUPERVISOR
Tony Zalik
STATE OF CALIFORNIA - DEPARTMENT OF TRANSPORTATION
Caltrans

LAST REVISION DATE PLOTTED => 5-APR-2023
03-10-23 TIME PLOTTED => 13:22

BORDER LAST REVISED 8/5/2020
USERNAME => s152443
DGN FILE => 01170002451a000_PM 37.64.dgn
RELATIVE BORDER SCALE IS IN INCHES 0 1 2 3
UNIT 0312
PROJECT NUMBER & PHASE 01160000351

Dist	COUNTY	LOCATION CODE	POST MILES TOTAL PROJECT	SHEET No.	TOTAL SHEETS
01	HUM	101			77

REGISTERED CIVIL ENGINEER DATE

PLANS APPROVAL DATE

REGISTERED PROFESSIONAL ENGINEER No. Exp. CIVIL STATE OF CALIFORNIA

THE STATE OF CALIFORNIA, ITS OFFICERS OR AGENTS SHALL NOT BE RESPONSIBLE FOR THE ACCURACY OR COMPLETENESS OF SCANNED VERSIONS OF THIS PLAN SHEET.

PRELIMINARY DESIGN ONLY FOR REVIEW

NOTE:

ELBOW ANGLE IS APPROXIMATE, FIELD VERIFY PRIOR TO PROCUREMENT.

A PERMANENT DRAINAGE EASEMENT WILL NEED TO BE OBTAINED FOR THE OUTLET OF THIS SYSTEM.

PDE: PROPOSED PERMANENT DRAINAGE EASAMENT

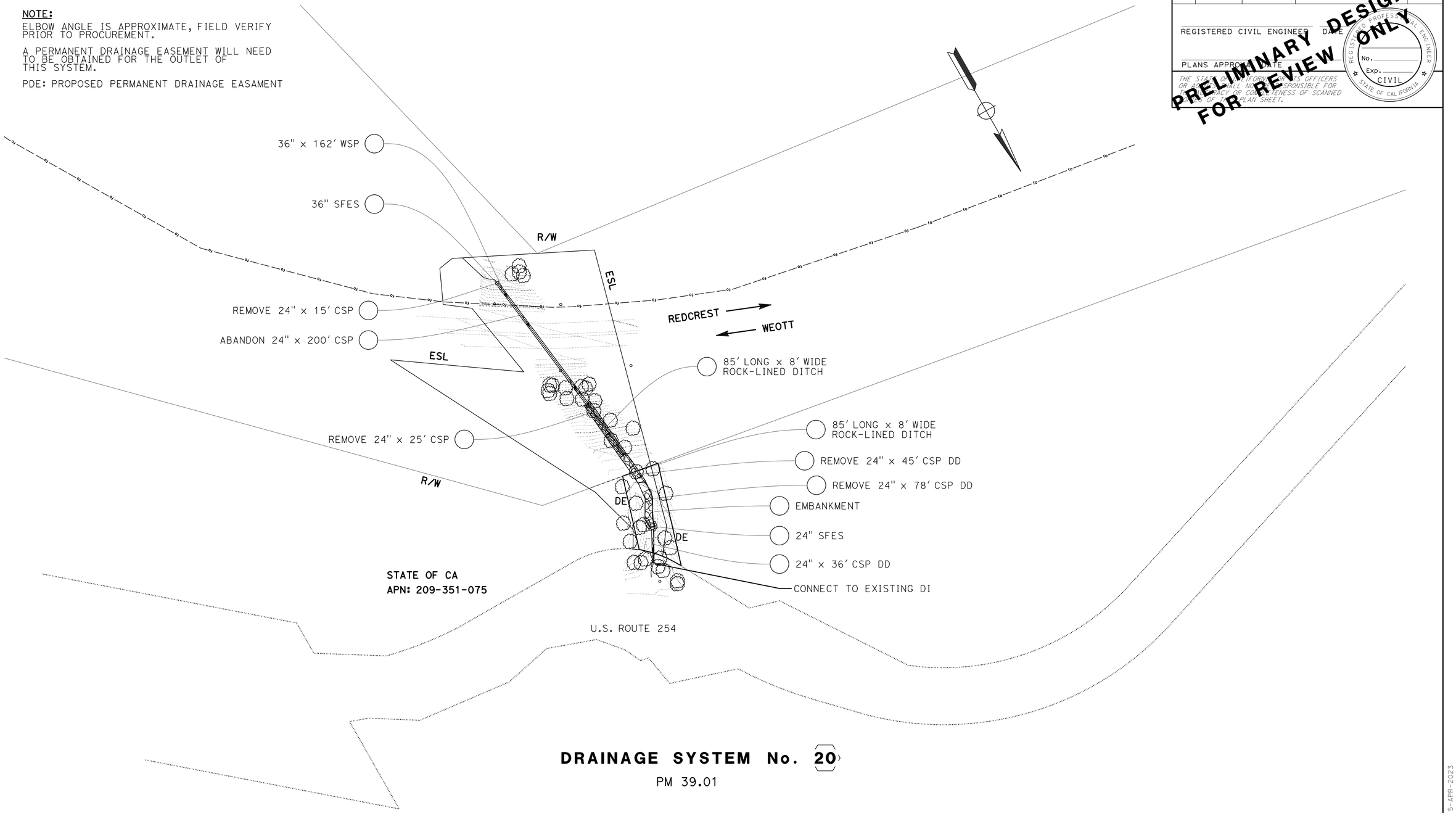

DRAINAGE SYSTEM No. 20

PM 39.01

DRAINAGE PLAN

SCALE: 1" = 50'

D-20

REVISED BY | DATE REVISED

Daniel Anderson

CALCULATED-DESIGNED BY | CHECKED BY

FUNCTIONAL SUPERVISOR

Tony Zalik

STATE OF CALIFORNIA - DEPARTMENT OF TRANSPORTATION

Caltrans

LAST REVISION | DATE PLOTTED => 5-APR-2023
03-10-23 | TIME PLOTTED => 13:22

BORDER LAST REVISED 8/5/2020

USERNAME => s152443
DGN FILE => 01170000245ia000_PM 39.01.dgn

RELATIVE BORDER SCALE IS IN INCHES 0 1 2 3

UNIT 0312

PROJECT NUMBER & PHASE 01160000351

Dist	COUNTY	LOCATION CODE	POST MILES TOTAL PROJECT	SHEET No.	TOTAL SHEETS
01	HUM	101			77

REGISTERED CIVIL ENGINEER DATE

PLANS APPROVAL DATE

REGISTERED PROFESSIONAL ENGINEER No. Exp. CIVIL STATE OF CALIFORNIA

THE STATE OF CALIFORNIA, ITS OFFICERS OR AGENTS SHALL NOT BE RESPONSIBLE FOR THE ACCURACY OR COMPLETENESS OF SCANNED COPIES OF THIS PLAN SHEET.

PRELIMINARY DESIGN ONLY FOR REVIEW

ROCK-LINED DITCH

REMOVE SFES

HUMBOLDT REDWOOD CO

APN: 209-351-071

REMOVE 24" x 14' CSP DD

EMBANKMENT

REMOVE INLET

G2 DI (H=4.5')
GRATE TYPE XX
GRATE FL Elev xxx.xx

R/W

ESL

REMOVE 30" x 43' CSP

36" x 43' APC

ESL

ESL

fo fo fo fo fo fo fo fo

DRAINAGE SYSTEM No. 21

PM 39.23

DRAINAGE PLAN

SCALE: 1" = 10'

D-21

CALCULATED-DESIGNED BY Daniel Anderson

CHECKED BY

FUNCTIONAL SUPERVISOR Tony Zalik

REVISED BY

DATE REVISED

STATE OF CALIFORNIA - DEPARTMENT OF TRANSPORTATION

Caltrans

LAST REVISION 03-10-23

DATE PLOTTED => 5-APR-2023
TIME PLOTTED => 13:23

BORDER LAST REVISED 8/5/2020

USERNAME => s152443
DGN FILE => 01170002451a000_PM 39.23.dgn

RELATIVE BORDER SCALE IS IN INCHES 0 1 2 3

UNIT 0312

PROJECT NUMBER & PHASE 01160000351

Dist	COUNTY	LOCATION CODE	POST MILES TOTAL PROJECT	SHEET No.	TOTAL SHEETS
01	HUM	101			77

REGISTERED CIVIL ENGINEER DATE

PLANS APPROVAL DATE

THE STATE OF CALIFORNIA, ITS OFFICERS OR AGENTS SHALL NOT BE RESPONSIBLE FOR THE ACCURACY OR COMPLETENESS OF SCANNED IMAGES OF THIS PLAN SHEET.

REGISTERED PROFESSIONAL ENGINEER No. Exp. CIVIL STATE OF CALIFORNIA

PRELIMINARY DESIGN ONLY FOR REVIEW

NOTE:
USE EXTREME CAUTION WHEN EXCVATING NEAR UTILITIES. THE LOCATION OF UTILITY LINES DRAWN ON THE PLANS IS APPROXIMATE UNLESS STATED OTHERWISE.

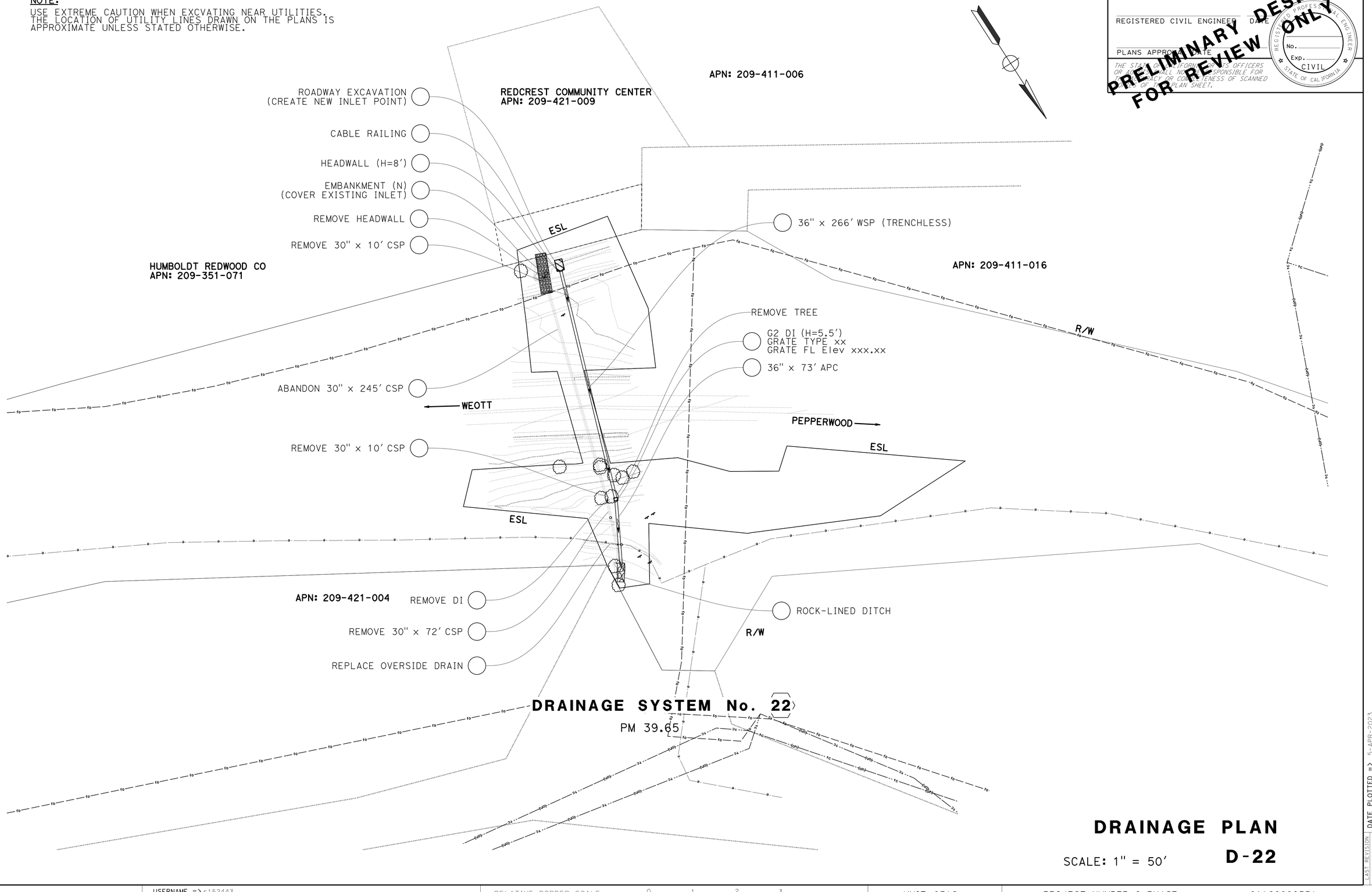

DRAINAGE PLAN

SCALE: 1" = 50'

D-22

STATE OF CALIFORNIA - DEPARTMENT OF TRANSPORTATION
Caltrans

FUNCTIONAL SUPERVISOR: Tony Zalik
CALCULATED-DESIGNED BY
CHECKED BY: Daniel Anderson
REVISED BY
DATE REVISED

LAST REVISION: DATE PLOTTED => 5-APR-2023
03-10-23 TIME PLOTTED => 13:23

BORDER LAST REVISED 8/5/2020

USERNAME => s152443
DGN FILE => 01170000245ia000_PM 39.65.dgn

RELATIVE BORDER SCALE IS IN INCHES 0 1 2 3

UNIT 0312

PROJECT NUMBER & PHASE 01160000351

Dist	COUNTY	LOCATION CODE	POST MILES TOTAL PROJECT	SHEET No.	TOTAL SHEETS
01	HUM	101			77

REGISTERED CIVIL ENGINEER DATE

PLANS APPROVAL DATE

THE STATE OF CALIFORNIA, ITS OFFICERS OR AGENTS SHALL NOT BE RESPONSIBLE FOR THE ACCURACY OR COMPLETENESS OF SCANNED COPIES OF THIS PLAN SHEET.

REGISTERED PROFESSIONAL ENGINEER No. Exp. CIVIL STATE OF CALIFORNIA

PRELIMINARY DESIGN ONLY FOR REVIEW

NOTE:

CONTRACTOR SUPPLIED BIOLOGIST TO DICTATE FINAL LENGTH OF ROCK LINED CHANNEL

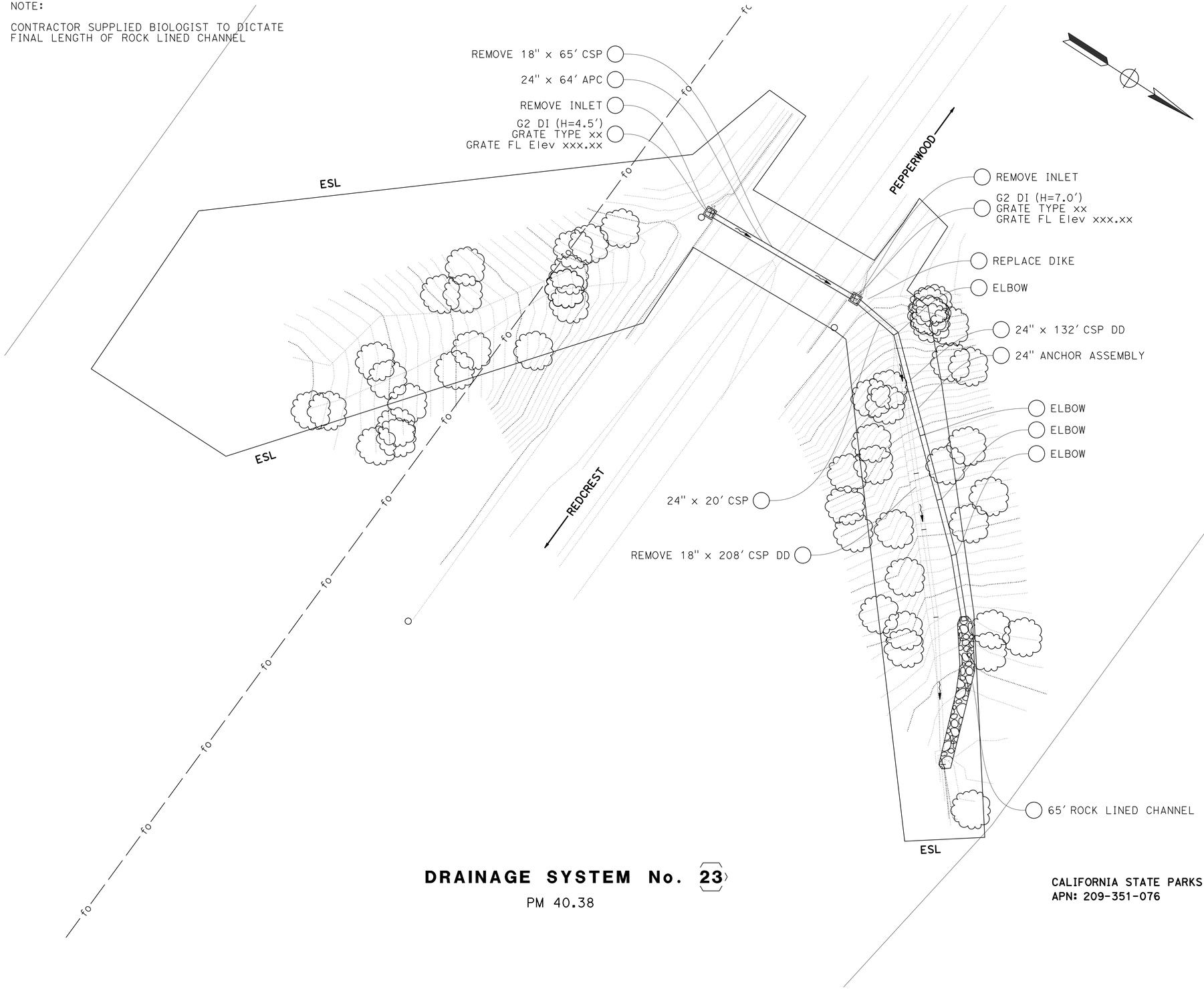

DRAINAGE SYSTEM No. 23

PM 40.38

CALIFORNIA STATE PARKS
APN: 209-351-076

DRAINAGE PLAN

SCALE: 1" = 20'

D-23

STATE OF CALIFORNIA - DEPARTMENT OF TRANSPORTATION
Caltrans

FUNCTIONAL SUPERVISOR: Tony Zalik

CALCULATED-DESIGNED BY

CHECKED BY

REVISED BY | DATE REVISED

Daniel Anderson

LAST REVISION | DATE PLOTTED => 5-APR-2023 | 03-10-23 | TIME PLOTTED => 13:23

BORDER LAST REVISED 8/5/2020

USERNAME => s152443
DGN FILE => 0117000245ia000_PM 40.38.dgn

RELATIVE BORDER SCALE IS IN INCHES 0 1 2 3

UNIT 0312

PROJECT NUMBER & PHASE 01160000351

Dist	COUNTY	LOCATION CODE	POST MILES TOTAL PROJECT	SHEET No.	TOTAL SHEETS
01	HUM	101		26	77

REGISTERED CIVIL ENGINEER DATE

PLANS APPROVAL DATE

THE STATE OF CALIFORNIA OR ITS OFFICERS OR AGENTS SHALL NOT BE RESPONSIBLE FOR THE ACCURACY OR COMPLETENESS OF SCANNED VIEWS OF THIS PLAN SHEET.

REGISTERED PROFESSIONAL ENGINEER No. Exp. CIVIL STATE OF CALIFORNIA

PRELIMINARY DESIGN FOR REVIEW ONLY

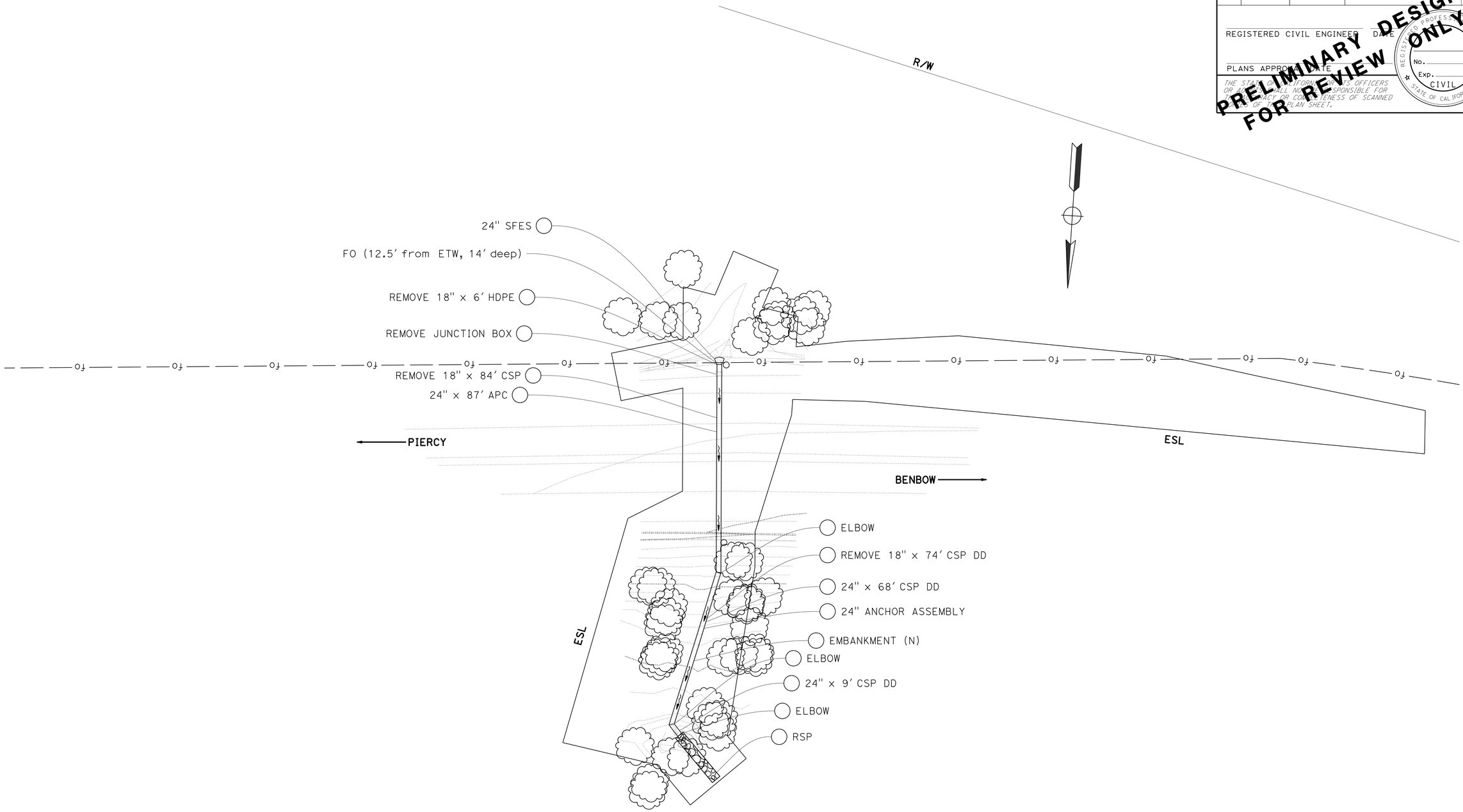

DRAINAGE SYSTEM No. 24

PM 41.45

DRAINAGE PLAN

SCALE: 1" = 20'

D-24

STATE OF CALIFORNIA - DEPARTMENT OF TRANSPORTATION

Caltrans

FUNCTIONAL SUPERVISOR: Tony Zalik

CALCULATED-DESIGNED BY: Daniel Anderson

CHECKED BY

REVISED BY

DATE REVISED

LAST REVISION 03-10-23

DATE PLOTTED => 5-APR-2023

TIME PLOTTED => 13:23

Dist	COUNTY	LOCATION CODE	POST MILES TOTAL PROJECT	SHEET No.	TOTAL SHEETS
01	HUM	101			77

REGISTERED CIVIL ENGINEER DATE

PLANS APPROVAL DATE

THE STATE OF CALIFORNIA, ITS OFFICERS OR AGENTS SHALL NOT BE RESPONSIBLE FOR THE ACCURACY OR COMPLETENESS OF SCANNED IMAGES OF THIS PLAN SHEET.

REGISTERED PROFESSIONAL ENGINEER No. Exp. CIVIL STATE OF CALIFORNIA

PRELIMINARY DESIGN ONLY FOR REVIEW

NOTE:

USE EXTREME CAUTION WHEN EXCVATING NEAR UTILITIES. THE LOCATION OF UTILITY LINES DRAWN ON THE PLANS IS APPROXIMATE UNLESS STATED OTHERWISE.

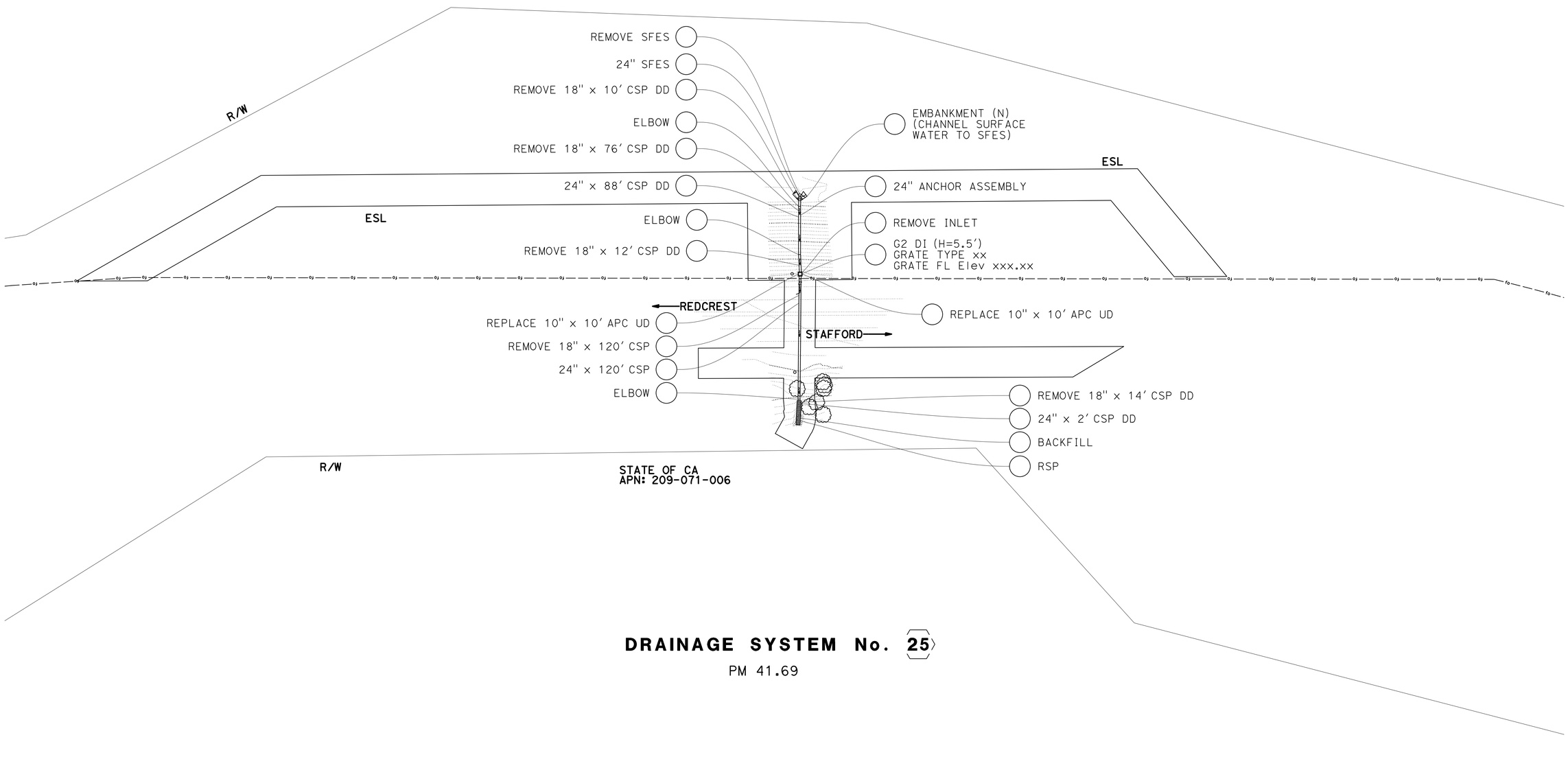

DRAINAGE SYSTEM No. 25

PM 41.69

DRAINAGE PLAN

SCALE: 1" = 50'

D-25

REVISED BY | DATE REVISED

CALCULATED-DESIGNED BY: Daniel Anderson | CHECKED BY

FUNCTIONAL SUPERVISOR: Tony Zalik

STATE OF CALIFORNIA - DEPARTMENT OF TRANSPORTATION

Caltrans

LAST REVISION | DATE PLOTTED => 5-APR-2023 | TIME PLOTTED => 13:23 | 03-10-23

BORDER LAST REVISED 8/5/2020 | USERNAME => s152443 | DGN FILE => 01170002451a000_PM 41.69.dgn | RELATIVE BORDER SCALE IS IN INCHES 0 1 2 3 | UNIT 0312 | PROJECT NUMBER & PHASE 01160000351

Dist	COUNTY	LOCATION CODE	POST MILES TOTAL PROJECT	SHEET No.	TOTAL SHEETS
01	HUM	101			77

REGISTERED CIVIL ENGINEER DATE

PLANS APPROVAL DATE

THE STATE OF CALIFORNIA, ITS OFFICERS OR AGENTS SHALL NOT BE RESPONSIBLE FOR THE ACCURACY OR COMPLETENESS OF SCANNED PLANS OR THIS PLAN SHEET.

REGISTERED PROFESSIONAL ENGINEER No. Exp. CIVIL STATE OF CALIFORNIA

PRELIMINARY DESIGN ONLY FOR REVIEW

HUMBOLDT REDWOOD CO
APN: 209-081-029

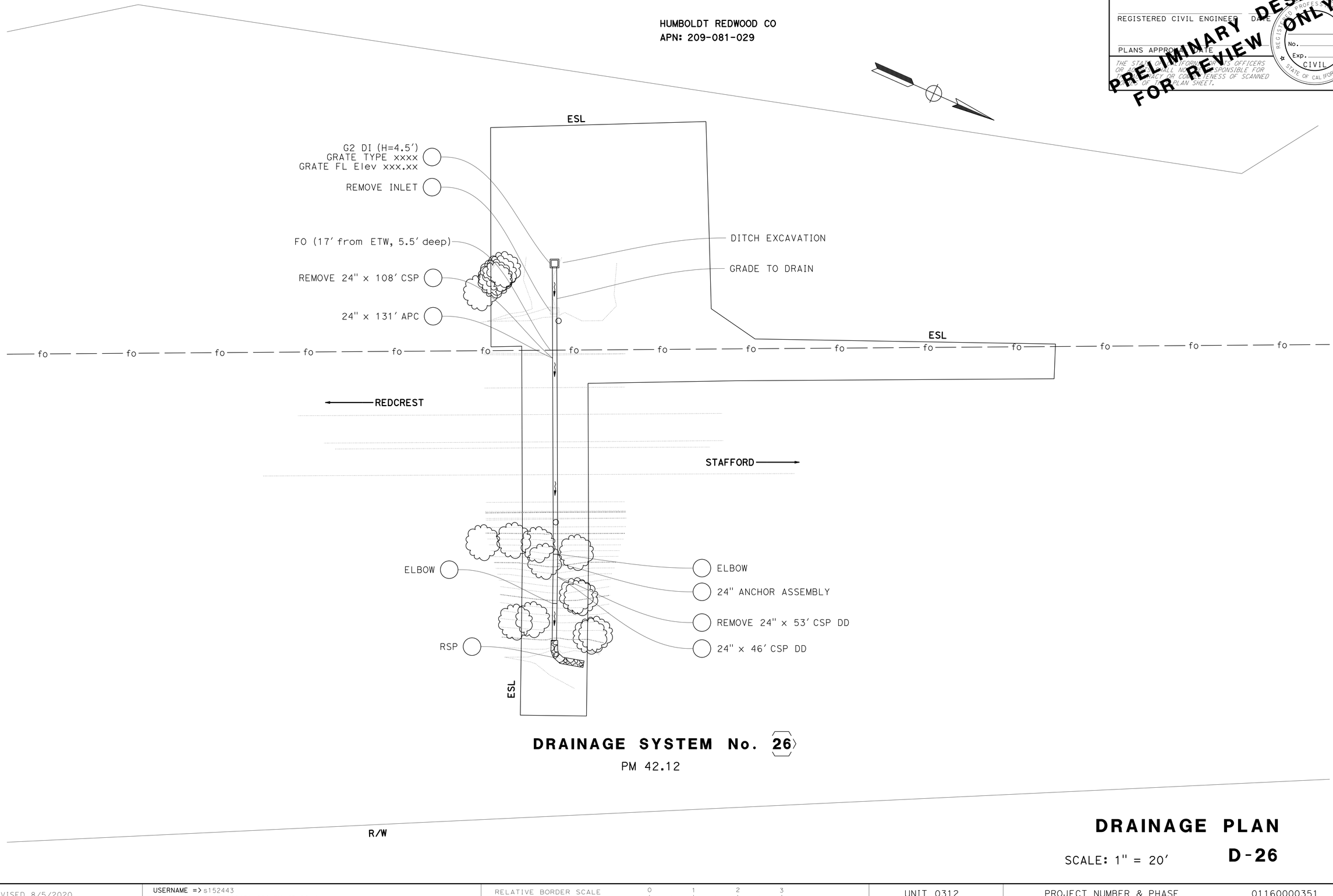

DRAINAGE SYSTEM No. 26

PM 42.12

DRAINAGE PLAN

SCALE: 1" = 20'

D-26

REVISED BY	DATE REVISED

CALCULATED-DESIGNED BY: Daniel Anderson
CHECKED BY:

FUNCTIONAL SUPERVISOR: Tony Zalik

STATE OF CALIFORNIA - DEPARTMENT OF TRANSPORTATION
Caltrans

LAST REVISION 03-10-23
DATE PLOTTED => 5-APR-2023
TIME PLOTTED => 13:23

BORDER LAST REVISED 8/5/2020
USERNAME => s152443
DGN FILE => 0117000245ia000_PM 42.12.dgn
RELATIVE BORDER SCALE IS IN INCHES 0 1 2 3
UNIT 0312
PROJECT NUMBER & PHASE 01160000351

Dist	COUNTY	LOCATION CODE	POST MILES TOTAL PROJECT	SHEET No.	TOTAL SHEETS
01	HUM	101			77

REGISTERED CIVIL ENGINEER DATE

PLANS APPROVAL DATE

THE STATE OF CALIFORNIA, ITS OFFICERS OR AGENTS SHALL NOT BE RESPONSIBLE FOR THE ACCURACY OR COMPLETENESS OF SCANNED IMAGES OF THIS PLAN SHEET.

REGISTERED PROFESSIONAL ENGINEER No. Exp. CIVIL STATE OF CALIFORNIA

PRELIMINARY DESIGN ONLY FOR REVIEW

NOTE:
Existing 4.5′ x 5.2′ x 264.1′ ELLIPTICAL CSP DRAINAGE SYSTEM

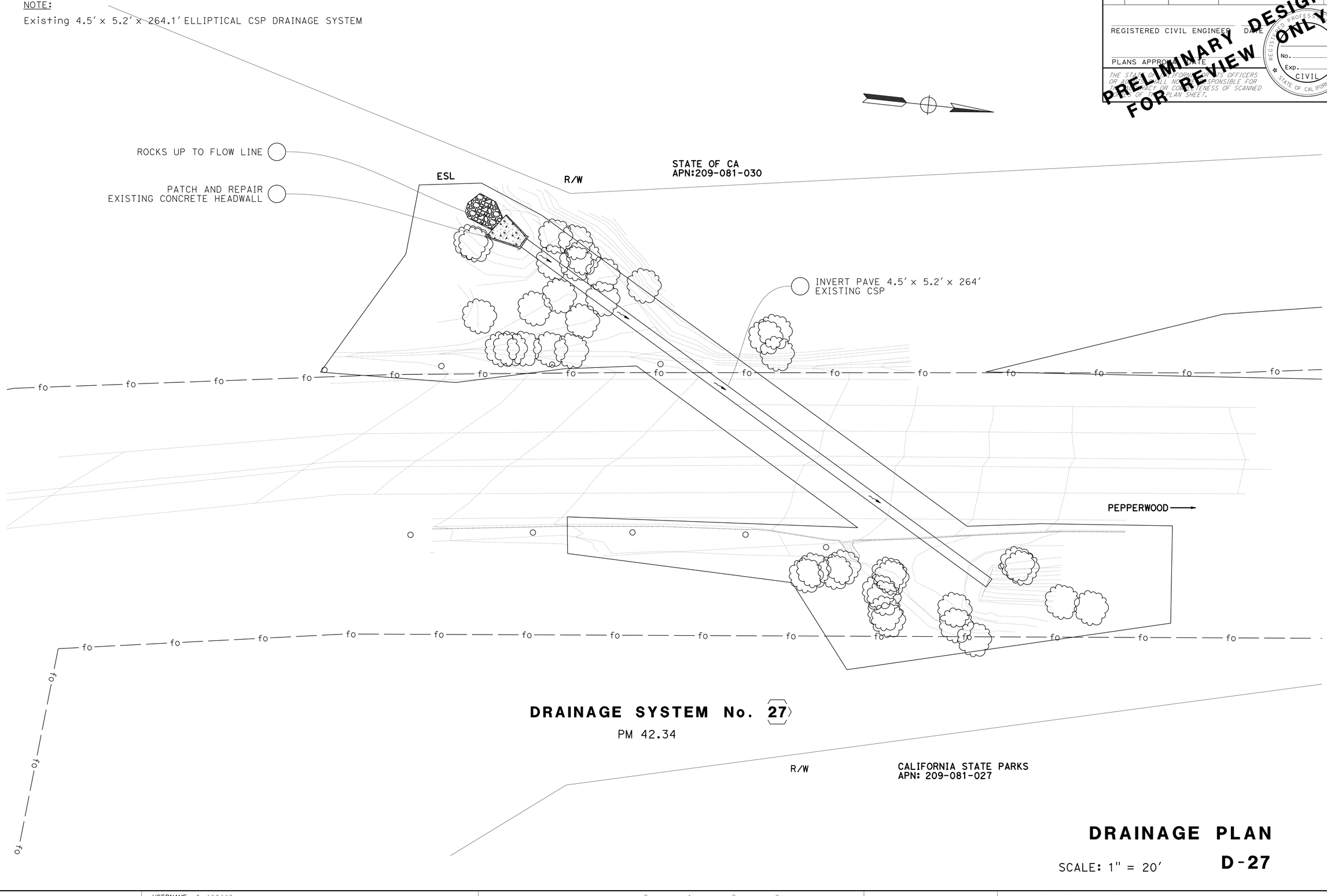

DRAINAGE SYSTEM No. 27

PM 42.34

DRAINAGE PLAN

SCALE: 1" = 20′

D-27

REVISED BY | DATE REVISED

Daniel Anderson

CALCULATED-DESIGNED BY | CHECKED BY

FUNCTIONAL SUPERVISOR

Tony Zalik

STATE OF CALIFORNIA - DEPARTMENT OF TRANSPORTATION

Caltrans

LAST REVISION | DATE PLOTTED => 5-APR-2023
03-10-23 | TIME PLOTTED => 13:23

BORDER LAST REVISED 8/5/2020

USERNAME => s152443
DGN FILE => 01170000245ia000_PM 42.34.dgn

RELATIVE BORDER SCALE IS IN INCHES 0 1 2 3

UNIT 0312

PROJECT NUMBER & PHASE 01160000351

Dist	COUNTY	LOCATION CODE	POST MILES TOTAL PROJECT	SHEET No.	TOTAL SHEETS
01	HUM	101			77

REGISTERED CIVIL ENGINEER DATE

PLANS APPROVAL DATE

THE STATE OF CALIFORNIA, ITS OFFICERS OR AGENTS SHALL NOT BE RESPONSIBLE FOR THE ACCURACY OR COMPLETENESS OF SCANNED COPIES OF THIS PLAN SHEET.

REGISTERED PROFESSIONAL ENGINEER No. Exp. CIVIL STATE OF CALIFORNIA

PRELIMINARY DESIGN ONLY FOR REVIEW

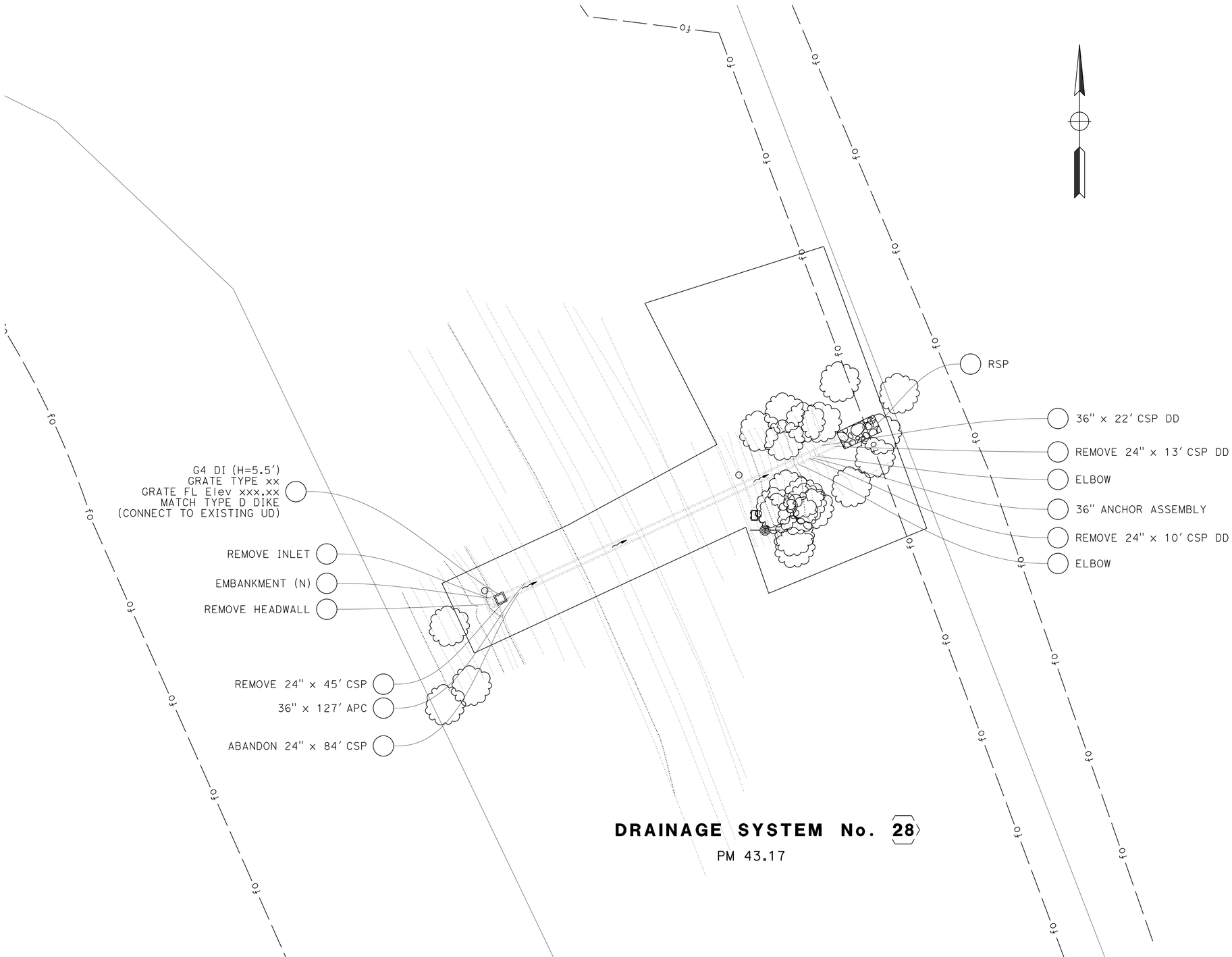

DRAINAGE SYSTEM No. 28

PM 43.17

DRAINAGE PLAN

SCALE: 1" = 20'

D-28

CALCULATED-DESIGNED BY

CHECKED BY

REVISED BY

DATE REVISED

Daniel Anderson

FUNCTIONAL SUPERVISOR

Tony Zalik

STATE OF CALIFORNIA - DEPARTMENT OF TRANSPORTATION

Caltrans

LAST REVISION 03-10-23

DATE PLOTTED => 5-APR-2023

TIME PLOTTED => 13:23

BORDER LAST REVISED 8/5/2020

USERNAME => s152443

DGN FILE => 01170002451a000_PM 43.17.dgn

RELATIVE BORDER SCALE IS IN INCHES 0 1 2 3

UNIT 0312

PROJECT NUMBER & PHASE 01160000351

Dist	COUNTY	LOCATION CODE	POST MILES TOTAL PROJECT	SHEET No.	TOTAL SHEETS
01	HUM	101			77

REGISTERED CIVIL ENGINEER DATE

PLANS APPROVAL DATE

THE STATE OF CALIFORNIA, ITS OFFICERS OR AGENTS SHALL NOT BE RESPONSIBLE FOR THE ACCURACY OR COMPLETENESS OF SCANNED COPIES OF THIS PLAN SHEET.

REGISTERED PROFESSIONAL ENGINEER
No.
Exp.
CIVIL
STATE OF CALIFORNIA

PRELIMINARY DESIGN ONLY FOR REVIEW

REDCREST

STAFFORD

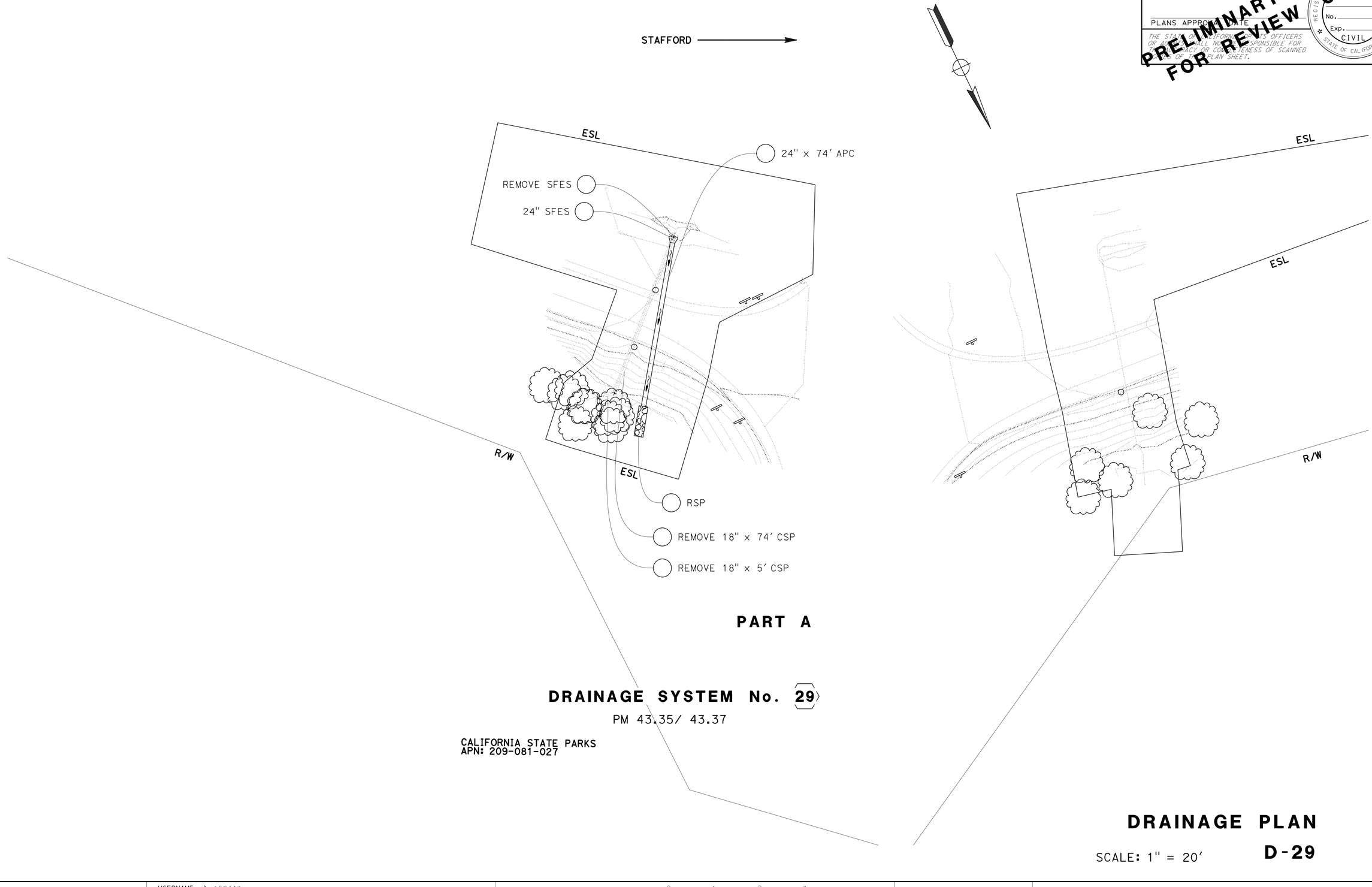

PART A

DRAINAGE SYSTEM No. 29

PM 43.35/ 43.37

CALIFORNIA STATE PARKS
APN: 209-081-027

DRAINAGE PLAN

SCALE: 1" = 20'

D-29

STATE OF CALIFORNIA - DEPARTMENT OF TRANSPORTATION
Caltrans

FUNCTIONAL SUPERVISOR: Tony Zalik

CALCULATED-DESIGNED BY

CHECKED

REVISED BY

DATE REVISED

Daniel Anderson

LAST REVISION 03-10-23 | DATE PLOTTED => 5-APR-2023 | TIME PLOTTED => 13:23

BORDER LAST REVISED 8/5/2020

USERNAME => s152443
DGN FILE => 0117000245ia000_PM 43.35.dgn

RELATIVE BORDER SCALE IS IN INCHES 0 1 2 3

UNIT 0312

PROJECT NUMBER & PHASE 01160000351

Dist	COUNTY	LOCATION CODE	POST MILES TOTAL PROJECT	SHEET No.	TOTAL SHEETS
01	HUM	101			77

REGISTERED CIVIL ENGINEER DATE

PLANS APPROVAL DATE

REGISTERED PROFESSIONAL ENGINEER No. Exp. CIVIL STATE OF CALIFORNIA

THE STATE OF CALIFORNIA, ITS OFFICERS OR AGENTS SHALL NOT BE RESPONSIBLE FOR ACCURACY OR COMPLETENESS OF SCANNED IMAGES OF THIS PLAN SHEET.

PRELIMINARY DESIGN ONLY FOR REVIEW

REDCREST

STAFFORD

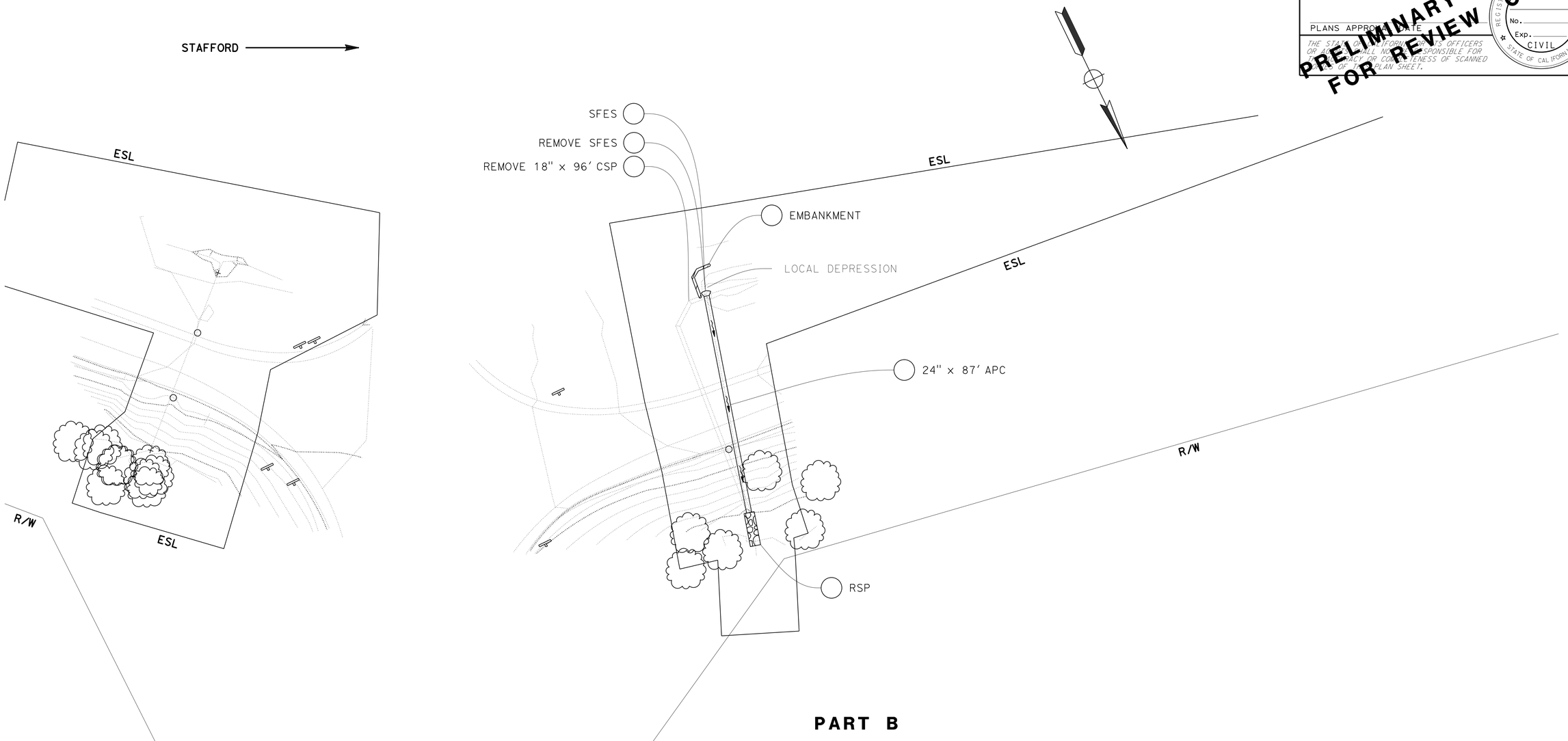

CALIFORNIA STATE PARKS
APN: 209-081-027

PART B

DRAINAGE SYSTEM No. 29

PM 43.37

DRAINAGE PLAN

SCALE: 1" = 20'

D-29

REVISED BY | DATE REVISED

Daniel Anderson

CALCULATED-DESIGNED BY | CHECKED BY

FUNCTIONAL SUPERVISOR

Tony Zalik

STATE OF CALIFORNIA - DEPARTMENT OF TRANSPORTATION

Caltrans

LAST REVISION 03-10-23 | DATE PLOTTED => 5-APR-2023 | TIME PLOTTED => 13:23

BORDER LAST REVISED 8/5/2020 | USERNAME => s152443 | DGN FILE => 01170002451a000_PM 43.37.dgn | RELATIVE BORDER SCALE IS IN INCHES 0 1 2 3 | UNIT 0312 | PROJECT NUMBER & PHASE 01160000351

Dist	COUNTY	LOCATION CODE	POST MILES TOTAL PROJECT	SHEET No.	TOTAL SHEETS
01	HUM	101			77

REGISTERED CIVIL ENGINEER DATE

PLANS APPROVAL DATE

REGISTERED PROFESSIONAL ENGINEER No. Exp. CIVIL STATE OF CALIFORNIA

THE STATE OF CALIFORNIA, ITS OFFICERS OR AGENTS SHALL NOT BE RESPONSIBLE FOR THE ACCURACY OR COMPLETENESS OF SCANNED VERSIONS OF THIS PLAN SHEET.

PRELIMINARY DESIGN ONLY FOR REVIEW

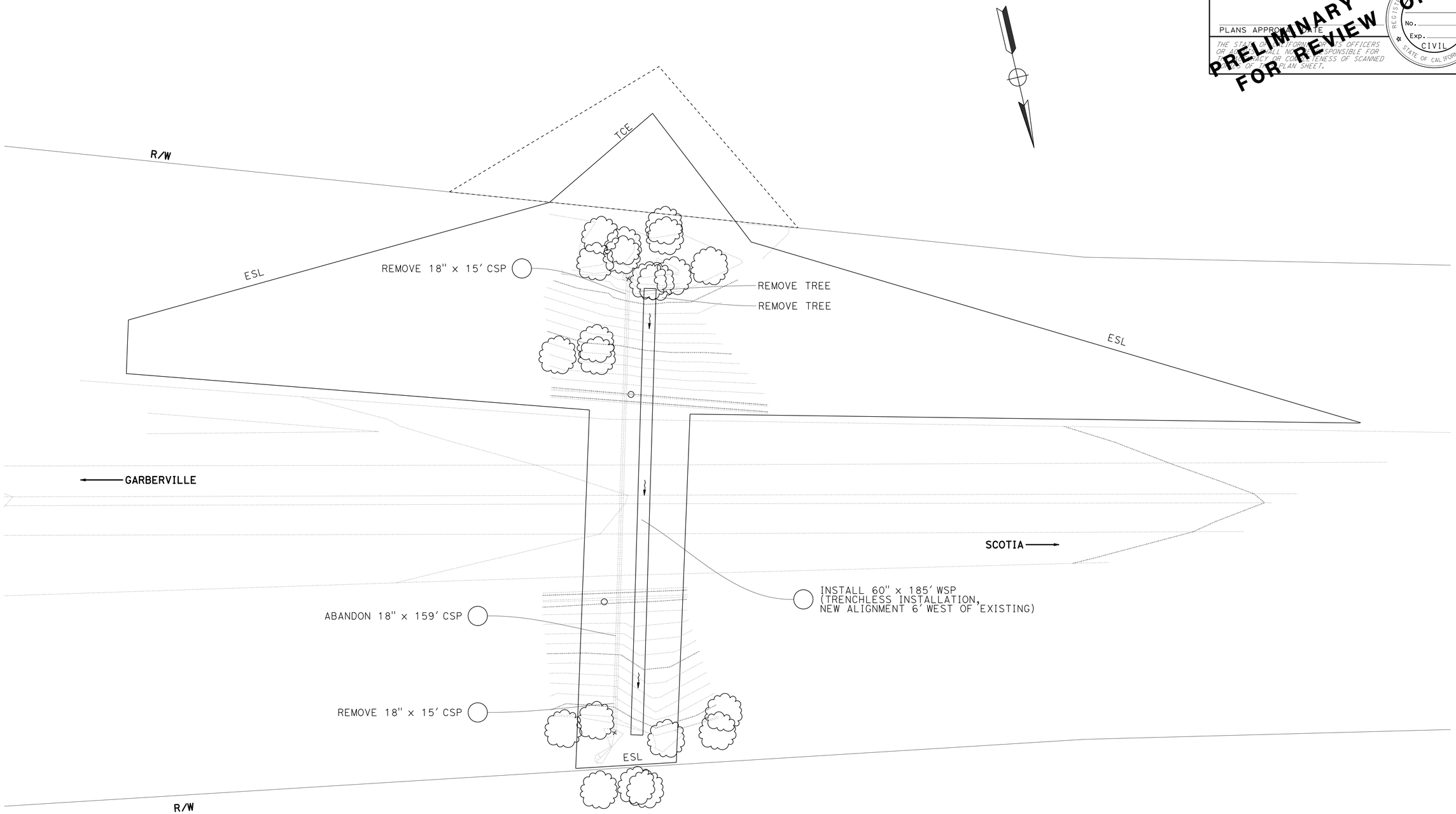

CALIFORNIA STATE PARKS
APN: 209-081-027

DRAINAGE SYSTEM No. 30

PM 43.54

DRAINAGE PLAN

SCALE: 1" = 20'

D-30

STATE OF CALIFORNIA - DEPARTMENT OF TRANSPORTATION
Caltrans

FUNCTIONAL SUPERVISOR: Tony Zalik

CALCULATED-DESIGNED BY:
CHECKED BY:

REVISED BY	DATE REVISED
Daniel Anderson	

LAST REVISION 03-10-23
DATE PLOTTED => 5-APR-2023
TIME PLOTTED => 13:23

BORDER LAST REVISED 8/5/2020
USERNAME => s152443
DGN FILE => 01170002451a000_PM 43.54.dgn
RELATIVE BORDER SCALE IS IN INCHES 0 1 2 3
UNIT 0312
PROJECT NUMBER & PHASE 01160000351

Dist	COUNTY	LOCATION CODE	POST MILES TOTAL PROJECT	SHEET No.	TOTAL SHEETS
01	HUM	101			77

REGISTERED CIVIL ENGINEER DATE

PLANS APPROVAL DATE

THE STATE OF CALIFORNIA, ITS OFFICERS OR AGENTS SHALL NOT BE RESPONSIBLE FOR THE ACCURACY OR COMPLETENESS OF SCANNED IMAGES OF THIS PLAN SHEET.

REGISTERED PROFESSIONAL ENGINEER No. Exp. CIVIL STATE OF CALIFORNIA

PRELIMINARY DESIGN ONLY FOR REVIEW

NOTE:
REDUCE LENGHT OF SYSTEM BY 5'

HUMBOLDT REDWOOD CO
APN: 209-081-020

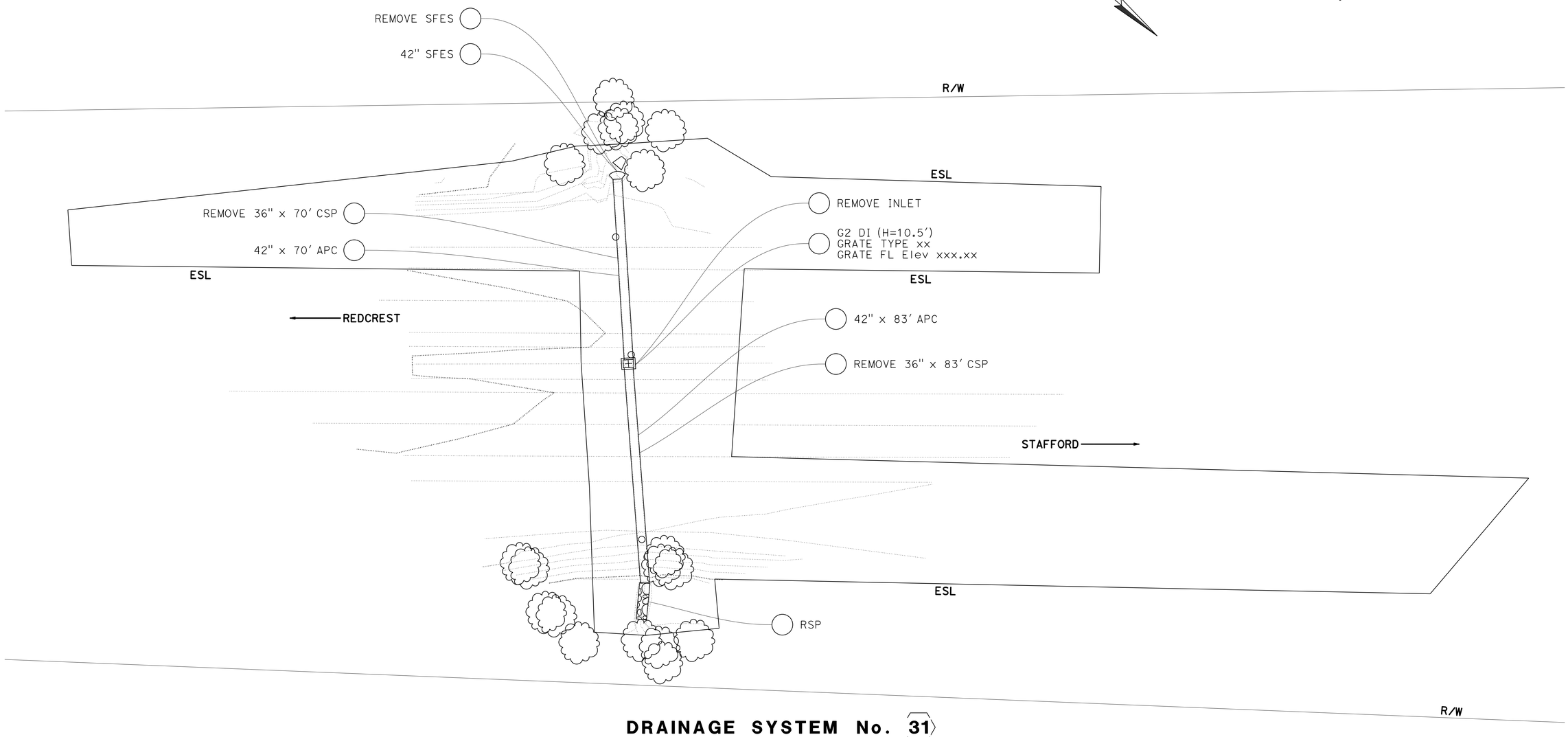

DRAINAGE SYSTEM No. 31

PM 44.17

CALIFORNIA STATE PARKS
APN: 209-081-027

DRAINAGE PLAN

SCALE: 1" = 20'

D-31

STATE OF CALIFORNIA - DEPARTMENT OF TRANSPORTATION
Caltrans

FUNCTIONAL SUPERVISOR: Tony Zalik
CALCULATED-DESIGNED BY
CHECKED BY
REVISED BY
DATE REVISED
Daniel Anderson

LAST REVISION | DATE PLOTTED => 5-APR-2023
03-10-23 | TIME PLOTTED => 13:23

BORDER LAST REVISED 8/5/2020

USERNAME => s152443
DGN FILE => 01170000245ia000_PM 44.17.dgn

RELATIVE BORDER SCALE IS IN INCHES 0 1 2 3

UNIT 0312

PROJECT NUMBER & PHASE 01160000351

Dist	COUNTY	LOCATION CODE	POST MILES TOTAL PROJECT	SHEET No.	TOTAL SHEETS
01	HUM	101			77

REGISTERED CIVIL ENGINEER DATE

PLANS APPROVAL DATE

THE STATE OF CALIFORNIA, ITS OFFICERS OR AGENTS SHALL NOT BE RESPONSIBLE FOR THE ACCURACY OR COMPLETENESS OF SCANNED COPIES OF THIS PLAN SHEET.

REGISTERED PROFESSIONAL ENGINEER No. Exp. CIVIL STATE OF CALIFORNIA

PRELIMINARY DESIGN ONLY FOR REVIEW

HUMBOLDT REDWOOD COMPANY
APN 205-321-32

R/W

REMOVE PIPE INLET

G1 DI (H=5.00')
GRATE TYPE 24
GRATE FL Elev xxx.xx
(CONNECT TO EXIST UD)

10" x 10' APC
(COUPLE TO EXIST.
UNDERDRAIN SYSTEM)

ESL

10" x 10' APC
(COUPLE TO EXIST.
UNDERDRAIN SYSTEM)

SHIVELY

REMOVE 18" x 45' CSP

24" x 45' APC

REMOVE PIPE INLET

G1 DI (H=6.50')
GRATE TYPE 24
GRATE FL Elev xxx.xx

REMOVE 18" x 79' CSP

24" x 80' APC

STAFFORD

IMPROVE EXISTING RSP

ESL

R/W

DRAINAGE SYSTEM No. 32

PM 45.25

STATE PARKS
APN 205-321-24

DRAINAGE PLAN

SCALE: 1" = 20'

D-32

STATE OF CALIFORNIA - DEPARTMENT OF TRANSPORTATION
Caltrans

FUNCTIONAL SUPERVISOR: Tony Zalik

CALCULATED-DESIGNED BY

CHECKED BY

REVISED BY	DATE REVISED
Daniel Anderson	

LAST REVISION: DATE PLOTTED => 5-APR-2023; TIME PLOTTED => 13:23; 03-10-23

BORDER LAST REVISED 8/5/2020

USERNAME => s152443
DGN FILE => 0117000245ia000_PM 45.25.dgn

RELATIVE BORDER SCALE IS IN INCHES 0 1 2 3

UNIT 0312

PROJECT NUMBER & PHASE 01160000351

Dist	COUNTY	LOCATION CODE	POST MILES TOTAL PROJECT	SHEET No.	TOTAL SHEETS
01	HUM	101			77

REGISTERED CIVIL ENGINEER DATE

PLANS APPROVAL DATE

THE STATE OF CALIFORNIA, ITS OFFICERS OR AGENTS SHALL NOT BE RESPONSIBLE FOR THE ACCURACY OR COMPLETENESS OF SCANNED IMAGES OF THIS PLAN SHEET.

REGISTERED PROFESSIONAL ENGINEER No. Exp. CIVIL STATE OF CALIFORNIA

PRELIMINARY DESIGN ONLY FOR REVIEW

NOTE:
TEMPORARY CREEK DIVERSION SYSTEM

PERMANENT EASEMENT

PERMANENT EASEMENT

HUMBOLDT REDWOOD CO
APN: 205-321-028

REPAIR ERODED AREA AT INLET
(RAISE FL. ELEV. 6' APPROX.)
CLAY PLUG

60" SFES

R/W

REMOVE SFES

REMOVE 54" x 15' CSP

60" x 317' WSP
(TRENCHLESS)

ABANDON 54" x 316' CSP

REDCREST

HUMBOLDT REDWOOD CO
APN: 205-261-006

ESL

US 101

G2 DI (H=7.5')
GRATE TYPE xx
GRATE FL Elev xxx.xx

60" x 78' APC

ESL

US 101

STAFFORD

REMOVE 54" x 100' CSP

IMPROVE AND EXTEND
EXISTING RSP

DRAINAGE SYSTEM No. 33

PM 47.01

R/W

ESL

DRAINAGE PLAN

SCALE: 1" = 50'

D-33

REVISED BY	DATE REVISED
Daniel Anderson	

CALCULATED-DESIGNED BY

CHECKED BY

FUNCTIONAL SUPERVISOR: Tony Zalik

STATE OF CALIFORNIA - DEPARTMENT OF TRANSPORTATION

Caltrans

LAST REVISION 03-10-23

DATE PLOTTED => 5-APR-2023
TIME PLOTTED => 13:53

BORDER LAST REVISED 8/5/2020

USERNAME => s152443
DGN FILE => 0117000245ia000_PM 47.01.dgn

RELATIVE BORDER SCALE IS IN INCHES 0 1 2 3

UNIT 0312

PROJECT NUMBER & PHASE 01160000351

Dist	COUNTY	LOCATION CODE	POST MILES TOTAL PROJECT	SHEET No.	TOTAL SHEETS
01	HUM	101			77

REGISTERED CIVIL ENGINEER DATE

PLANS APPROVAL DATE

THE STATE OF CALIFORNIA, ITS OFFICERS OR AGENTS SHALL NOT BE RESPONSIBLE FOR THE ACCURACY OR COMPLETENESS OF SCANNED COPIES OF THIS PLAN SHEET.

REGISTERED PROFESSIONAL ENGINEER No. Exp. CIVIL STATE OF CALIFORNIA

PRELIMINARY DESIGN ONLY FOR REVIEW

HUMBOLDT REDWOOD CO
APN: 205-351-026

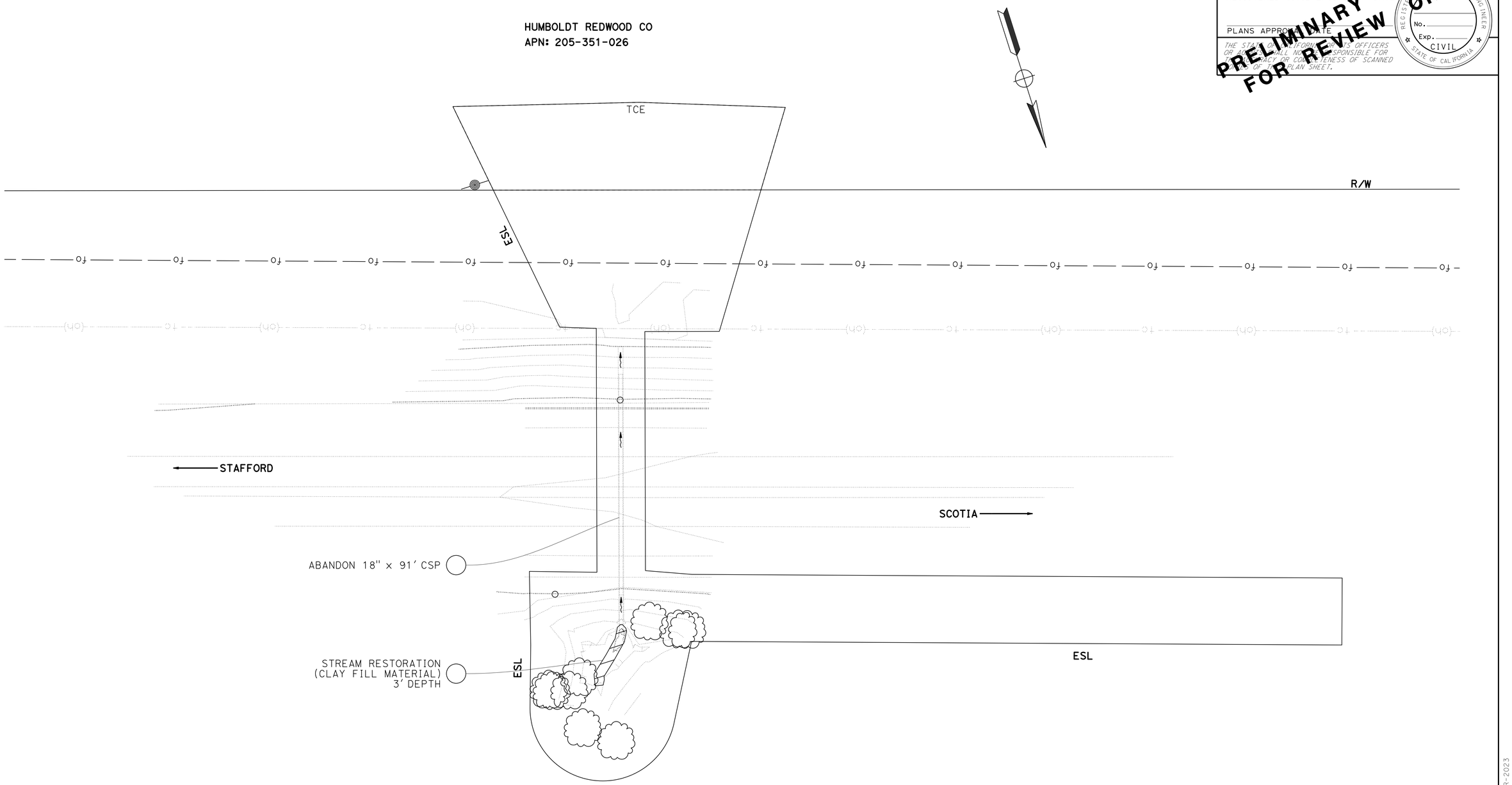

DRAINAGE SYSTEM No. 34

PM 49.86

DRAINAGE PLAN

SCALE: 1" = 20'

D-34

REVISED BY | DATE REVISED
Daniel Anderson
CALCULATED-DESIGNED BY | CHECKED BY
FUNCTIONAL SUPERVISOR
Matt Smith
STATE OF CALIFORNIA - DEPARTMENT OF TRANSPORTATION
Caltrans

LAST REVISION | DATE PLOTTED => 5-APR-2023
03-10-23 | TIME PLOTTED => 13:24

BORDER LAST REVISED 8/5/2020 | USERNAME => s152443 | DGN FILE => 01170002451a000_PM 49.86.dgn | RELATIVE BORDER SCALE IS IN INCHES 0 1 2 3 | UNIT 0312 | PROJECT NUMBER & PHASE 01160000351

Dist	COUNTY	LOCATION CODE	POST MILES TOTAL PROJECT	SHEET No.	TOTAL SHEETS
01	HUM	101			77

REGISTERED CIVIL ENGINEER DATE

PLANS APPROVAL DATE

REGISTERED PROFESSIONAL ENGINEER No. Exp. CIVIL STATE OF CALIFORNIA

THE STATE OF CALIFORNIA, ITS OFFICERS OR AGENTS SHALL NOT BE RESPONSIBLE FOR THE ACCURACY OR COMPLETENESS OF SCANNED COPIES OF THIS PLAN SHEET.

PRELIMINARY DESIGN ONLY FOR REVIEW

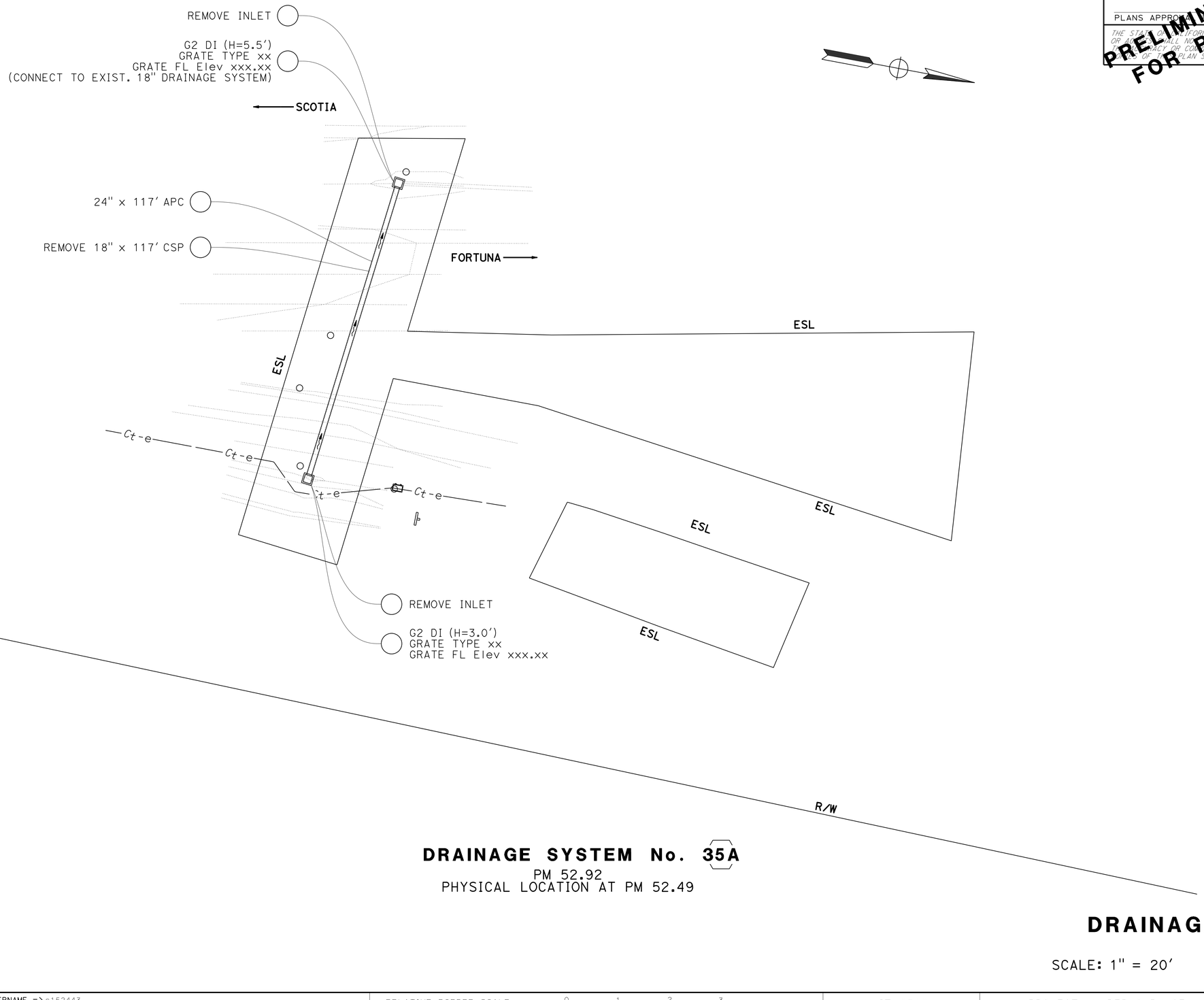

DRAINAGE SYSTEM No. 35A

PM 52.92
PHYSICAL LOCATION AT PM 52.49

DRAINAGE PLAN

SCALE: 1" = 20'

D-35A

CALCULATED-DESIGNED BY

CHECKED BY

REVISED BY

DATE REVISED

Daniel Anderson

FUNCTIONAL SUPERVISOR

Matt Smith

STATE OF CALIFORNIA - DEPARTMENT OF TRANSPORTATION

Caltrans

LAST REVISION DATE PLOTTED => 5-APR-2023
03-10-23 TIME PLOTTED => 13:24

BORDER LAST REVISED 8/5/2020

USERNAME => s152443
DGN FILE => 01170002451a000_PM 52.92A.dgn

RELATIVE BORDER SCALE IS IN INCHES 0 1 2 3

UNIT 0312

PROJECT NUMBER & PHASE 01160000351

Dist	COUNTY	LOCATION CODE	POST MILES TOTAL PROJECT	SHEET No.	TOTAL SHEETS
01	HUM	101			77

REGISTERED CIVIL ENGINEER DATE

PLANS APPROVAL DATE

REGISTERED PROFESSIONAL ENGINEER No. Exp. CIVIL STATE OF CALIFORNIA

THE STATE OF CALIFORNIA, ITS OFFICERS OR AGENTS SHALL NOT BE RESPONSIBLE FOR THE ACCURACY OR COMPLETENESS OF SCANNED VERSIONS OF THIS PLAN SHEET.

PRELIMINARY DESIGN FOR REVIEW ONLY

NOTE:

POTHOLING IS REQUIRED TO VERIFY LOCATION OF JUNCTION BOXES

VERIFY LOCATION AND LENGTHS OF JUNCTION BOXES AND CULVERTS

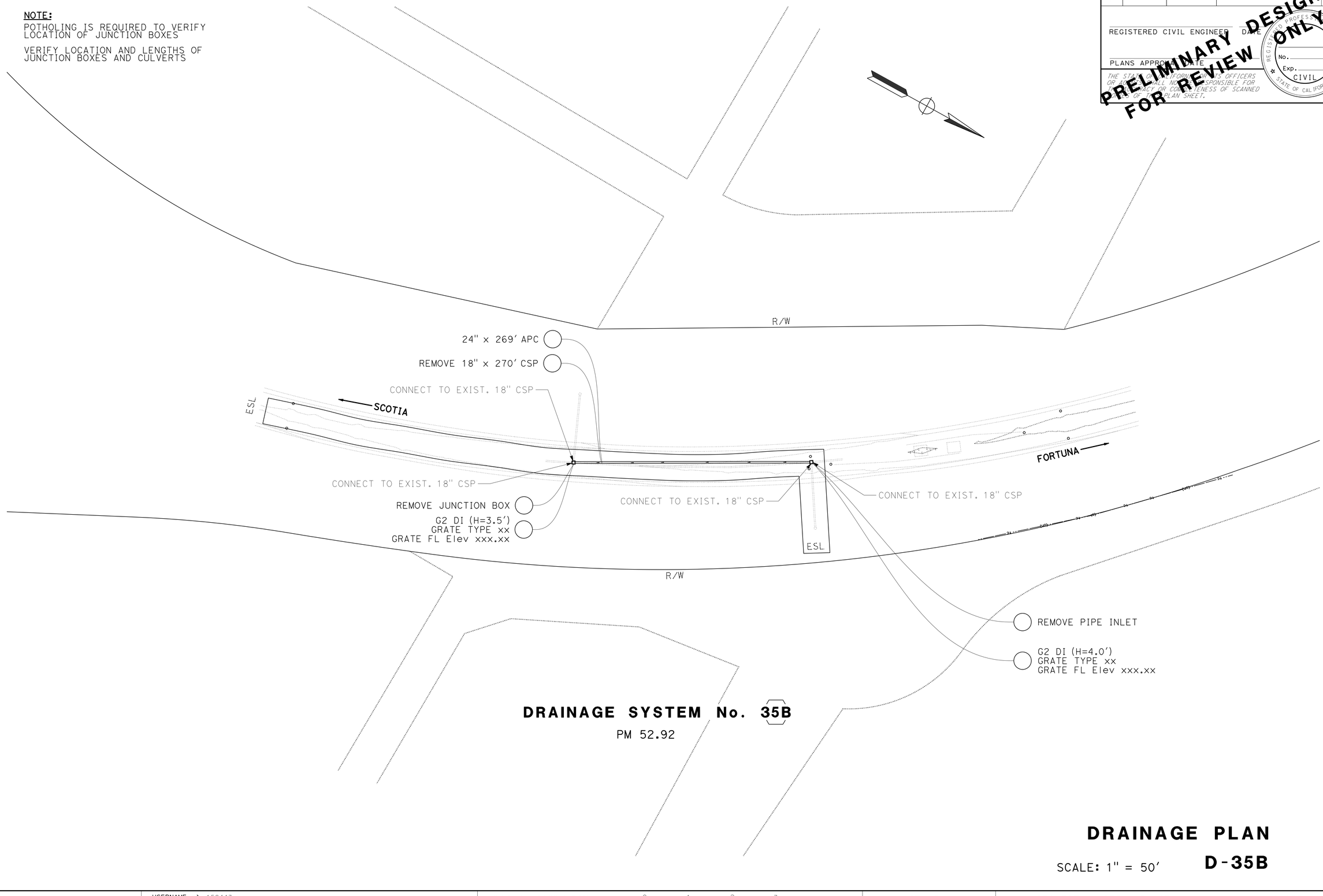

DRAINAGE SYSTEM No. 35B

PM 52.92

DRAINAGE PLAN

SCALE: 1" = 50'

D-35B

LAST REVISION | DATE PLOTTED => 5-APR-2023
03-10-23 | TIME PLOTTED => 13:24

CALCULATED-
DESIGNED BY

CHECKED BY

REVISED BY

DATE REVISED

Daniel Anderson

FUNCTIONAL SUPERVISOR

Tony Zalik

STATE OF CALIFORNIA - DEPARTMENT OF TRANSPORTATION

Caltrans

BORDER LAST REVISED 8/5/2020

USERNAME => s152443
DGN FILE => 01170000245ia000_PM 52.92B.dgn

RELATIVE BORDER SCALE IS IN INCHES 0 1 2 3

UNIT 0312

PROJECT NUMBER & PHASE 01160000351

Dist	COUNTY	LOCATION CODE	POST MILES TOTAL PROJECT	SHEET No.	TOTAL SHEETS
01	HUM	101			77

REGISTERED CIVIL ENGINEER DATE

PLANS APPROVAL DATE

THE STATE OF CALIFORNIA, ITS OFFICERS OR AGENTS SHALL NOT BE RESPONSIBLE FOR THE ACCURACY OR COMPLETENESS OF SCANNED COPIES OF THIS PLAN SHEET.

REGISTERED PROFESSIONAL ENGINEER No. Exp. CIVIL STATE OF CALIFORNIA

PRELIMINARY DESIGN ONLY FOR REVIEW

NOTE:

AN ENCROACHMENT PERMIT WILL NEED TO BE ACQUIRED BY THE CONTRACTOR FOR ACCESS ALONG BELLEVIEW AVE, CITY OF RIO DELL

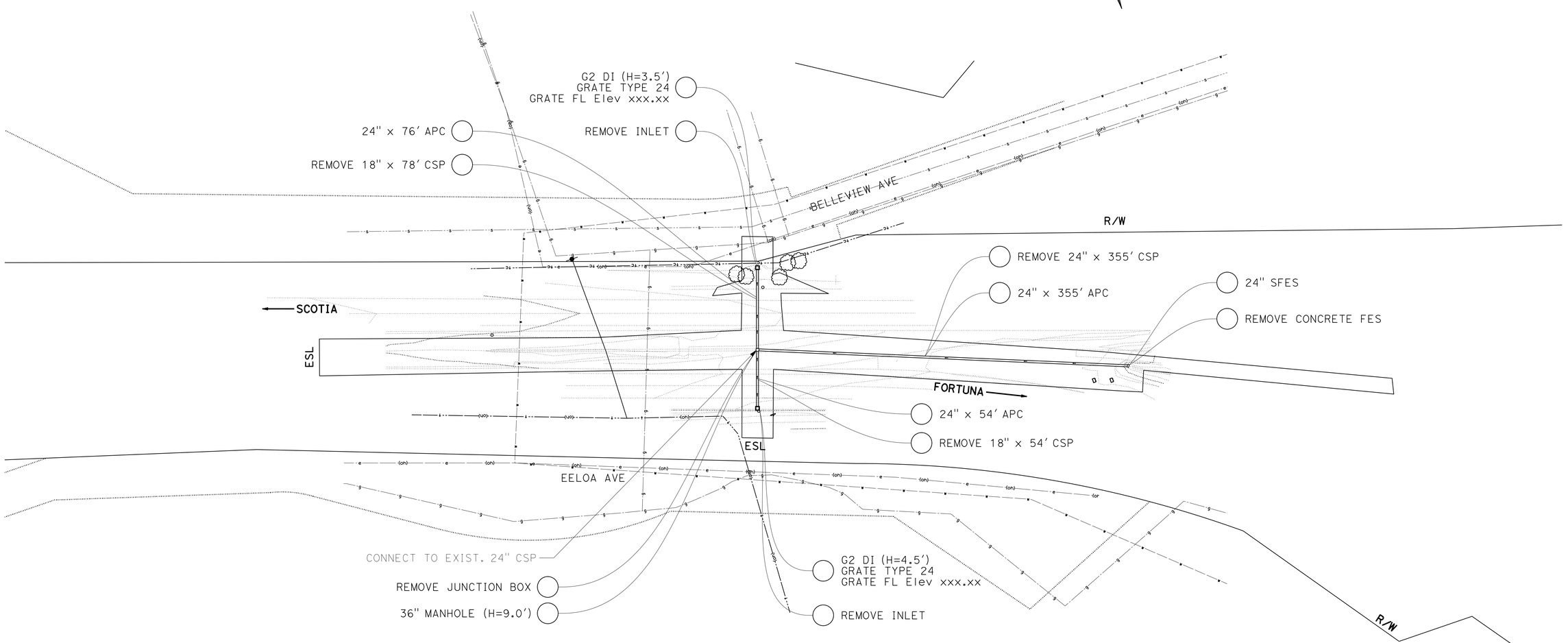

DRAINAGE SYSTEM No. 36

PM 53.85

DRAINAGE PLAN

SCALE: 1" = 50'

D-36

CALCULATED-DESIGNED BY

CHECKED BY

Daniel Anderson

REVISED BY

DATE REVISED

FUNCTIONAL SUPERVISOR

Tony Zalik

STATE OF CALIFORNIA - DEPARTMENT OF TRANSPORTATION

Caltrans

LAST REVISION 03-10-23

DATE PLOTTED => 5-APR-2023

TIME PLOTTED => 13:24

BORDER LAST REVISED 8/5/2020

USERNAME => s152443

DGN FILE => 01170000245ia000_PM 53.85.dgn

RELATIVE BORDER SCALE IS IN INCHES 0 1 2 3

UNIT 0312

PROJECT NUMBER & PHASE 01160000351

Dist	COUNTY	LOCATION CODE	POST MILES TOTAL PROJECT	SHEET No.	TOTAL SHEETS
01	HUM	101		24	77

REGISTERED CIVIL ENGINEER DATE

PLANS APPROVAL DATE

THE STATE OF CALIFORNIA, ITS OFFICERS OR AGENTS SHALL NOT BE RESPONSIBLE FOR THE ACCURACY OR COMPLETENESS OF SCANNED COPIES OF THIS PLAN SHEET.

REGISTERED PROFESSIONAL ENGINEER No. Exp. CIVIL STATE OF CALIFORNIA

PRELIMINARY DESIGN ONLY FOR REVIEW

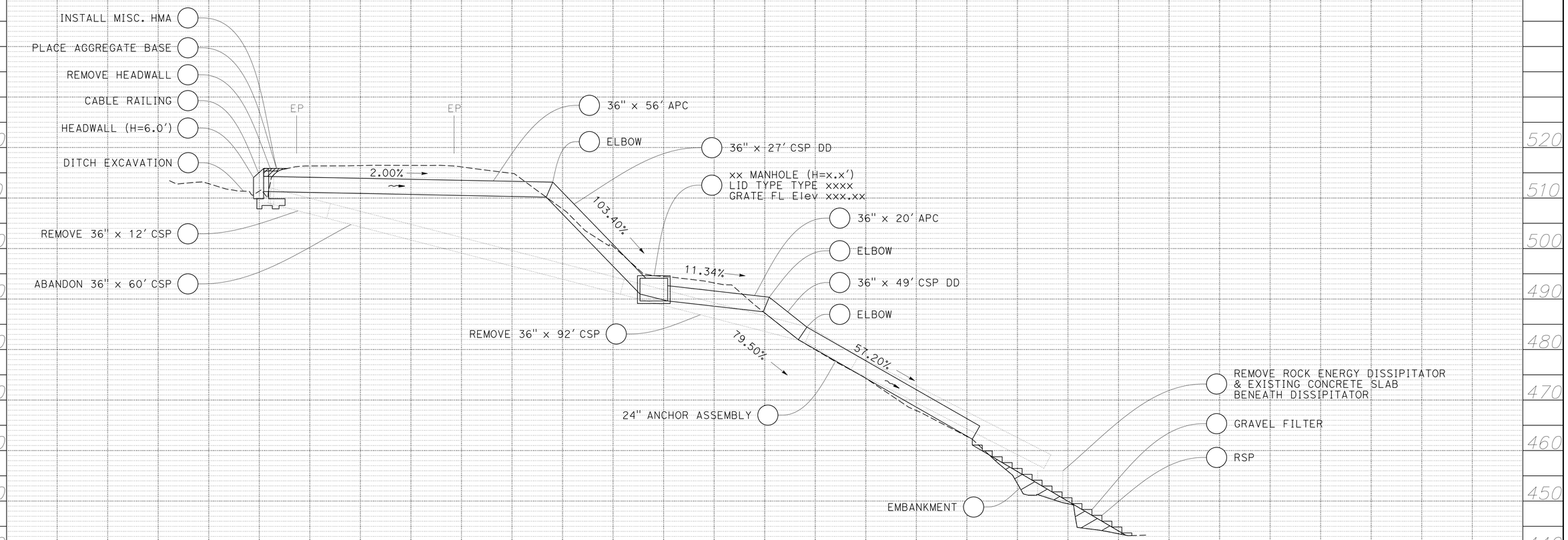

DRAINAGE SYSTEM No. 1

PM 2.40

DRAINAGE PROFILES

SCALE: 1" = 10'

DP-1

REVISED BY | DATE REVISED

CALCULATED-DESIGNED BY | CHECKED BY

Daniel Anderson

FUNCTIONAL SUPERVISOR

Tony Zalik

STATE OF CALIFORNIA - DEPARTMENT OF TRANSPORTATION

Caltrans

LAST REVISION DATE PLOTTED => 5-APR-2023
TIME PLOTTED => 13:24
03-10-23

BORDER LAST REVISED 8/5/2020

USERNAME => s152443
DGN FILE => 01170002451b000_PM 02.40.dgn

RELATIVE BORDER SCALE IS IN INCHES 0 1 2 3

UNIT 0312

PROJECT NUMBER & PHASE 01160000351

NOTE:
OWNERS OF THE UTILITIES SHOWN ARE:
PG&E AND FRONTIER COMMUNICATION

Dist	COUNTY	LOCATION CODE	POST MILES TOTAL PROJECT	SHEET No.	TOTAL SHEETS
01	HUM	101			77

REGISTERED CIVIL ENGINEER DATE

PLANS APPROVAL DATE

THE STATE OF CALIFORNIA, ITS OFFICERS OR AGENTS SHALL NOT BE RESPONSIBLE FOR THE ACCURACY OR COMPLETENESS OF SCANNED COPIES OF THIS PLAN SHEET.

PRELIMINARY DESIGN FOR REVIEW ONLY

REGISTERED PROFESSIONAL ENGINEER
No.
Exp.
CIVIL
STATE OF CALIFORNIA

EP
EP
MATCH LINE
2.00%
42" x 314' CSP
42" SFES
REPAIR CONCRETE LINED CHANNEL
REMOVE 42" x 30' CSP
ABANDON 42" x 406' CSP
42" x 48' CSP DD
42" ANCHOR ASSEMBLY
ELBOW
MATCH LINE
ELBOW
42" x 55' CSP
42" ANCHOR ASSEMBLY
42" x 47' CSP DD
ELBOW
REMOVE 42" x 20' CSP DD
14.80%
RSP
GRAVEL FILTER
PG&E BURIED ELECTRICAL LINE
(EXACT UTILITY LOCATION IS UNKNOWN)
FRONTIER COMMUNICATION
FIBER OPTIC CABLE
(EXACT UTILITY LOCATION IS UNKNOWN)
REMOVE INLET
G2 DI (H=7.0')
GRATE TYPE xx
GRATE FL Elev xxx.xx
REMOVE 12" x 8' CSP INLET PIPE
ABANDON 12" x 15' CSP INLET PIPE

DRAINAGE SYSTEM No. 2

PM 7.51

DRAINAGE PROFILES

SCALE: 1" = 10'

DP-2

REVISED BY | DATE REVISED
Daniel Anderson
CALCULATED-DESIGNED BY | CHECKED BY
FUNCTIONAL SUPERVISOR
Tony Zalik
STATE OF CALIFORNIA - DEPARTMENT OF TRANSPORTATION
Caltrans

LAST REVISION | DATE PLOTTED => 5-APR-2023
03-10-23 | TIME PLOTTED => 13:24

BORDER LAST REVISED 8/5/2020
USERNAME => s152443
DGN FILE => 01170002451b000_PM 07.51.dgn
RELATIVE BORDER SCALE IS IN INCHES 0 1 2 3
UNIT 0312
PROJECT NUMBER & PHASE 01160000351

Dist	COUNTY	LOCATION CODE	POST MILES TOTAL PROJECT	SHEET No.	TOTAL SHEETS
01	HUM	101			77

REGISTERED CIVIL ENGINEER DATE

PLANS APPROVAL DATE

REGISTERED PROFESSIONAL ENGINEER No. Exp. CIVIL STATE OF CALIFORNIA

THE STATE OF CALIFORNIA, ITS OFFICERS OR AGENTS SHALL NOT BE RESPONSIBLE FOR THE ACCURACY OR COMPLETENESS OF SCANNED COPIES OF THIS PLAN SHEET.

PRELIMINARY DESIGN ONLY FOR REVIEW

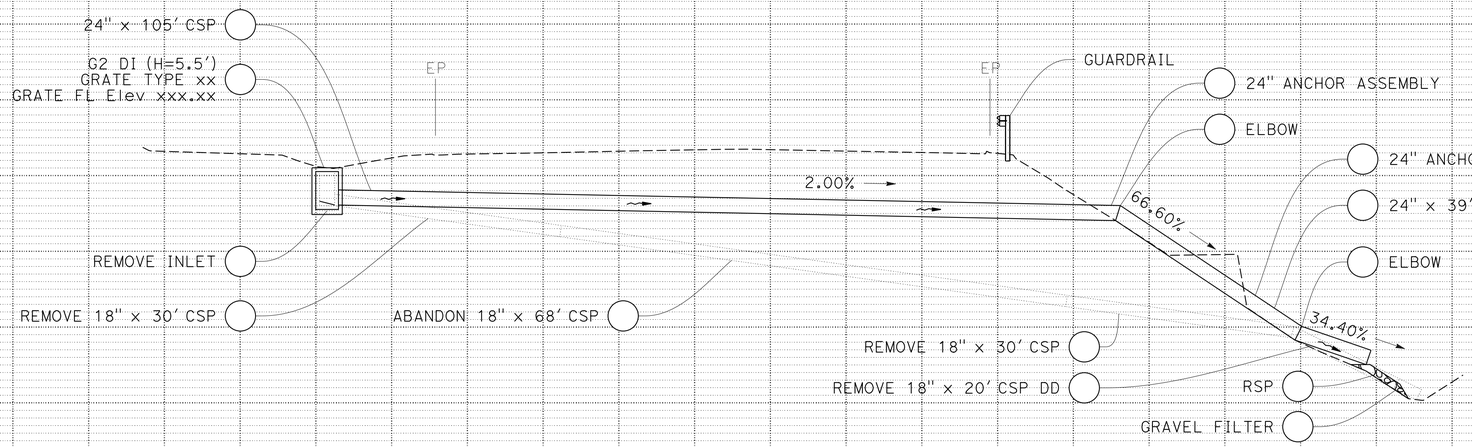

DRAINAGE SYSTEM No. 3

PM 13.39

DRAINAGE PROFILES

SCALE: 1" = 10'

DP-3

STATE OF CALIFORNIA - DEPARTMENT OF TRANSPORTATION

Caltrans

FUNCTIONAL SUPERVISOR: Tony Zalik

CALCULATED-DESIGNED BY: Daniel Anderson

CHECKED BY

REVISED BY | DATE REVISED

LAST REVISION | DATE PLOTTED => 5-APR-2023 | TIME PLOTTED => 13:24

BORDER LAST REVISED 8/5/2020

USERNAME => s152443
DGN FILE => 0117000245ib000_PM 13.39.dgn

RELATIVE BORDER SCALE IS IN INCHES 0 1 2 3

UNIT 0312

PROJECT NUMBER & PHASE 01160000351

Dist	COUNTY	LOCATION CODE	POST MILES TOTAL PROJECT	SHEET No.	TOTAL SHEETS
01	HUM	101			77

REGISTERED CIVIL ENGINEER DATE

PLANS APPROVAL DATE

THE STATE OF CALIFORNIA, ITS OFFICERS OR AGENTS SHALL NOT BE RESPONSIBLE FOR THE ACCURACY OR COMPLETENESS OF SCANNED COPIES OF THIS PLAN SHEET.

REGISTERED PROFESSIONAL ENGINEER No. Exp. CIVIL STATE OF CALIFORNIA

PRELIMINARY DESIGN ONLY FOR REVIEW

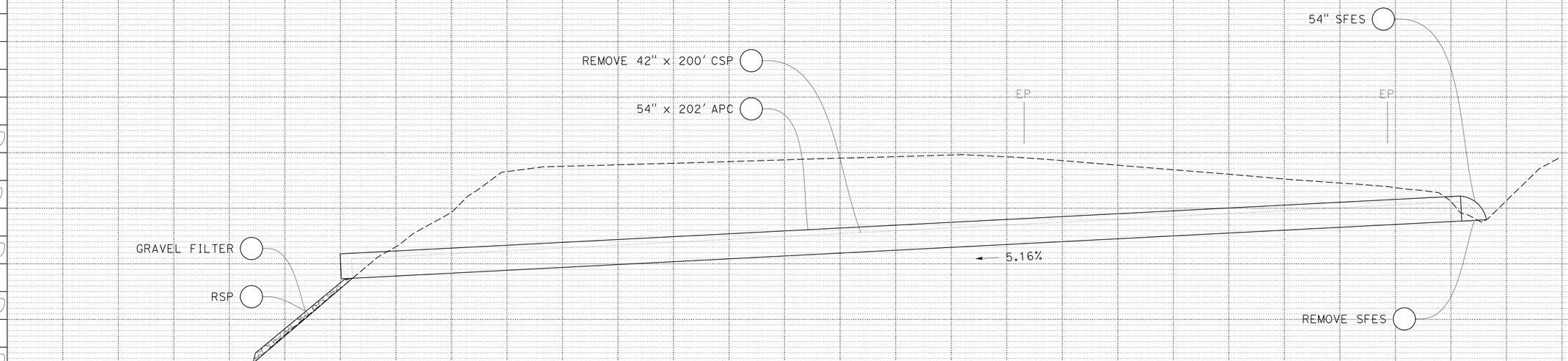

DRAINAGE SYSTEM No. 4

PM 15.64

DRAINAGE PROFILES

SCALE: 1" = 10'

DP-4

REVISED BY | DATE REVISED

CALCULATED-DESIGNED BY | Daniel Anderson

CHECKED BY

FUNCTIONAL SUPERVISOR | Tony Zalik

STATE OF CALIFORNIA - DEPARTMENT OF TRANSPORTATION | Caltrans

LAST REVISION | DATE PLOTTED => 5-APR-2023 | TIME PLOTTED => 13:24 | 03-10-23

BORDER LAST REVISED 8/5/2020

USERNAME => s152443
DGN FILE => 01170002451b000_PM 15.64.dgn

RELATIVE BORDER SCALE IS IN INCHES 0 1 2 3

UNIT 0312

PROJECT NUMBER & PHASE 01160000351

Dist	COUNTY	LOCATION CODE	POST MILES TOTAL PROJECT	SHEET No.	TOTAL SHEETS
01	HUM	101			77

REGISTERED CIVIL ENGINEER DATE

PLANS APPROVAL DATE

THE STATE OF CALIFORNIA, ITS OFFICERS OR AGENTS SHALL NOT BE RESPONSIBLE FOR THE ACCURACY OR COMPLETENESS OF SCANNED COPIES OF THIS PLAN SHEET.

REGISTERED PROFESSIONAL ENGINEER No. Exp. CIVIL STATE OF CALIFORNIA

PRELIMINARY DESIGN ONLY FOR REVIEW

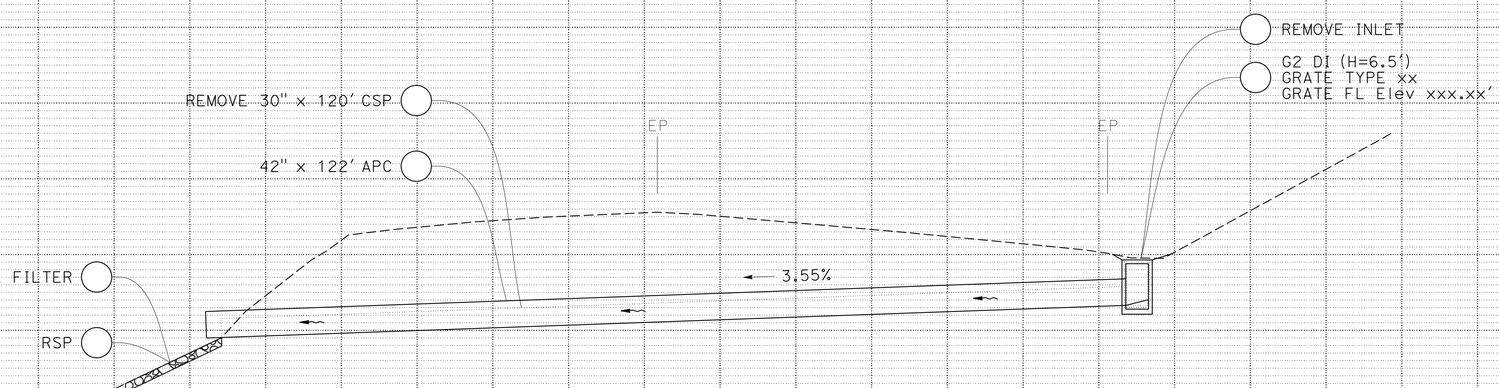

DRAINAGE SYSTEM No. 5

PM 16.09

DRAINAGE PROFILES

SCALE: 1" = 10'

DP-5

REVISED BY | DATE REVISED

CALCULATED-DESIGNED BY: Daniel Anderson

CHECKED BY

FUNCTIONAL SUPERVISOR: Tony Zalik

STATE OF CALIFORNIA - DEPARTMENT OF TRANSPORTATION

Caltrans

LAST REVISION | DATE PLOTTED => 5-APR-2023 | TIME PLOTTED => 13:24

03-10-23

BORDER LAST REVISED 8/5/2020

USERNAME => s152443
DGN FILE => 0117000245ib000_PM 16.09.dgn

RELATIVE BORDER SCALE IS IN INCHES 0 1 2 3

UNIT 0312

PROJECT NUMBER & PHASE 01160000351

Dist	COUNTY	LOCATION CODE	POST MILES TOTAL PROJECT	SHEET No.	TOTAL SHEETS
01	HUM	101			77

REGISTERED CIVIL ENGINEER DATE

PLANS APPROVAL DATE

THE STATE OF CALIFORNIA, ITS OFFICERS OR AGENTS SHALL NOT BE RESPONSIBLE FOR THE ACCURACY OR COMPLETENESS OF SCANNED COPIES OF THIS PLAN SHEET.

REGISTERED PROFESSIONAL ENGINEER No. Exp. CIVIL STATE OF CALIFORNIA

PRELIMINARY DESIGN ONLY FOR REVIEW

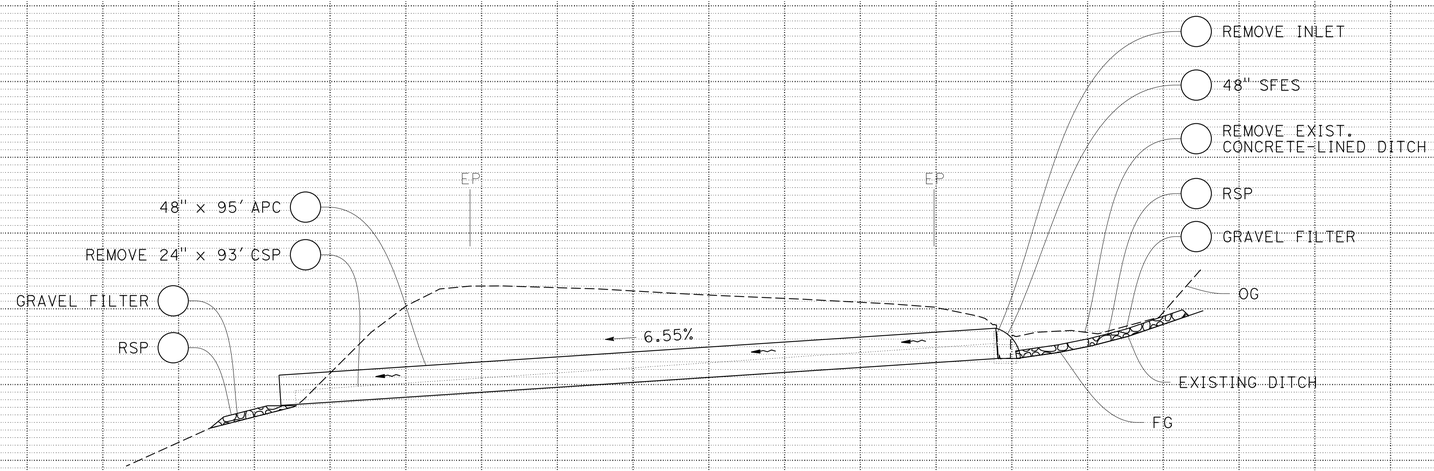

DRAINAGE SYSTEM No. 6

PM 16.44

DRAINAGE PROFILES

SCALE: 1" = 10'

DP-6

REVISED BY | DATE REVISED

Daniel Anderson

CALCULATED-DESIGNED BY | CHECKED BY

FUNCTIONAL SUPERVISOR

Tony Zalik

STATE OF CALIFORNIA - DEPARTMENT OF TRANSPORTATION

Caltrans

LAST REVISION | DATE PLOTTED => 5-APR-2023
03-10-23 | TIME PLOTTED => 13:24

BORDER LAST REVISED 8/5/2020

USERNAME => s152443
DGN FILE => 0117000245ib000_PM 16.44.dgn

RELATIVE BORDER SCALE IS IN INCHES 0 1 2 3

UNIT 0312

PROJECT NUMBER & PHASE 01160000351

Dist	COUNTY	LOCATION CODE	POST MILES TOTAL PROJECT	SHEET No.	TOTAL SHEETS
01	HUM	101			77

REGISTERED CIVIL ENGINEER DATE

PLANS APPROVAL DATE

THE STATE OF CALIFORNIA, ITS OFFICERS OR AGENTS SHALL NOT BE RESPONSIBLE FOR THE ACCURACY OR COMPLETENESS OF SCANNED COPIES OF THIS PLAN SHEET.

REGISTERED PROFESSIONAL ENGINEER No. Exp. CIVIL STATE OF CALIFORNIA

PRELIMINARY DESIGN ONLY FOR REVIEW

NOTE:
OWNERS OF THE UTILITIES SHOWN ARE:
AT&T AND CALTRANS ELECTRICAL

USE EXTREME CAUTION WHEN EXCVATING NEAR UTILITIES. THE LOCATION OF UTILITY LINES DRAWN ON THE PLANS IS APPROXIMATE UNLESS STATED OTHERWISE.

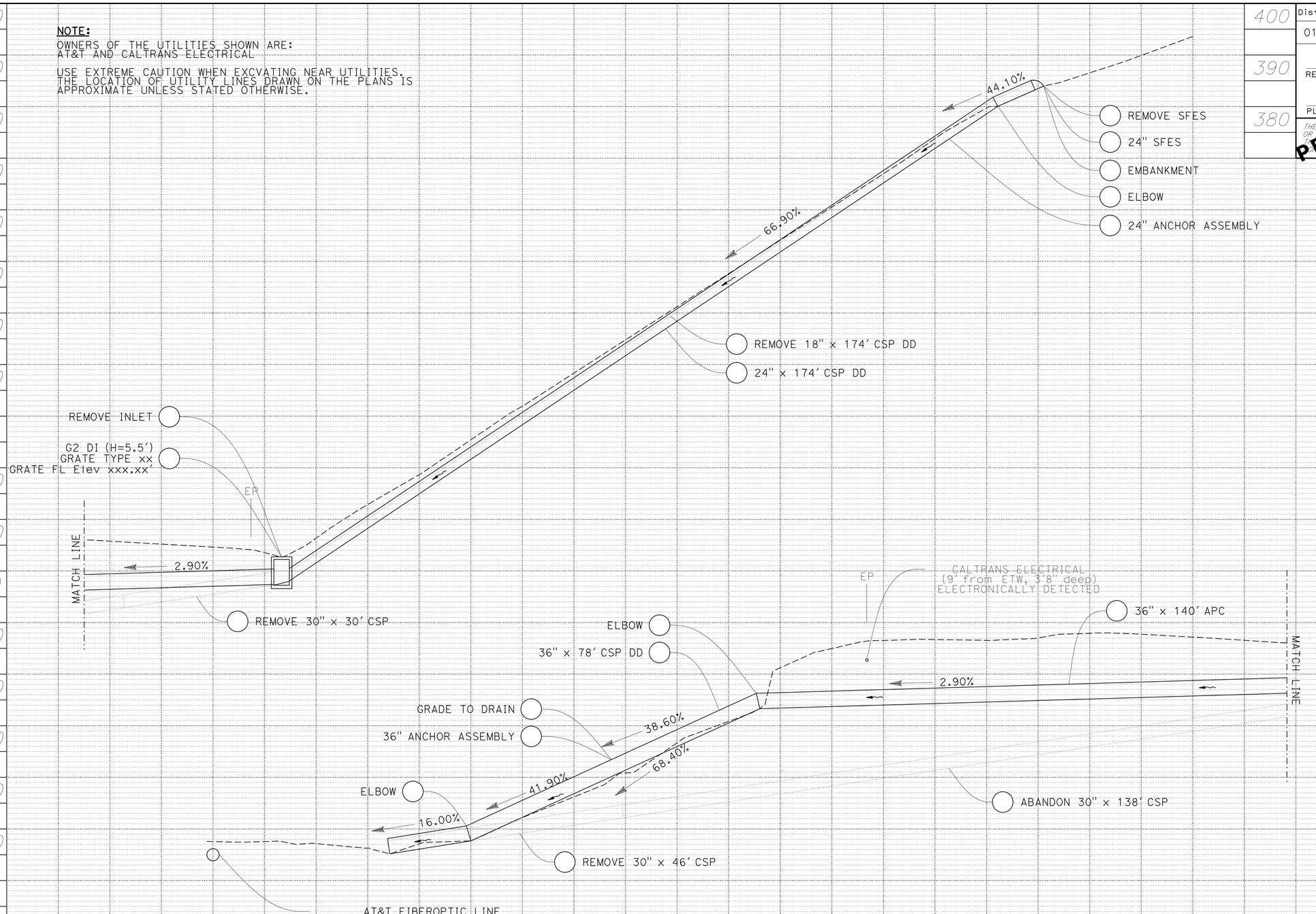

DRAINAGE SYSTEM No. 7

PM 17.54

DRAINAGE PROFILES

SCALE: 1" = 10'

DP-7

REVISED BY	DATE REVISED

CALCULATED-DESIGNED BY
Daniel Anderson

CHECKED BY

FUNCTIONAL SUPERVISOR
Tony Zalik

STATE OF CALIFORNIA - DEPARTMENT OF TRANSPORTATION
Caltrans

LAST REVISION DATE PLOTTED => 5-APR-2023
03-10-23 TIME PLOTTED => 13:24

BORDER LAST REVISED 8/5/2020

USERNAME => s152443
DGN FILE => 0117000245ib000_PM 17.54.dgn

RELATIVE BORDER SCALE IS IN INCHES 0 1 2 3

UNIT 0312

PROJECT NUMBER & PHASE 01160000351

Dist	COUNTY	LOCATION CODE	POST MILES TOTAL PROJECT	SHEET No.	TOTAL SHEETS
01	HUM	101			77

REGISTERED CIVIL ENGINEER DATE

PLANS APPROVAL DATE

THE STATE OF CALIFORNIA, ITS OFFICERS OR AGENTS SHALL NOT BE RESPONSIBLE FOR THE ACCURACY OR COMPLETENESS OF SCANNED IMAGES OF THIS PLAN SHEET.

PRELIMINARY DESIGN FOR REVIEW ONLY

REGISTERED PROFESSIONAL ENGINEER No. Exp. CIVIL STATE OF CALIFORNIA

G2 DI (H=4.0')
GRATE TYPE xx
GRATE FL Elev xxx.xx'

G2 DI (H=5.0')
GRATE TYPE xx
GRATE FL Elev xxx.xx'

2.00%

24" x 36' APC

24" x 150' APC

REMOVE 18" x 150' CSP
(IF CONFLICTING WITH
PROPOSED DESIGN)

2.00%

G2 DI (H=6.0')
GRATE TYPE xx
GRATE FL Elev xxx.xx'

REMOVE INLET

CALTRANS ELECTRICAL LINES

24" SFES

REMOVE SFES

67.55%

24" x 48' CSP DD

ELBOW

IDENTICAL

EP

CALTRANS ELECTRICAL LINES

24" ANCHOR ASSEMBLY

140.20%

REMOVE 18" x 49' CSP DD

7.53%

36" x 110' APC

REMOVE 36" x 204' CSP

EP

CALTRANS ELECTRICAL LINES

G2 DI (H=6.0')
GRATE TYPE xx
GRATE FL Elev xxx.xx'

EP

EP

36" x 90' APC

PATCH REPAIR EXISTING
CONCRETE LINED DITCH

15.41%

EXISTING OUTLET DRAIN FOR
CONCRETE LINED DITCH

IDENTICAL

CALTRANS ELECTRICAL LINES

REMOVE SFES

REMOVE 18" x 60' CSP

1.00%

1.00%

24" x 100' APC

G2 DI (H=4.5')
GRATE TYPE xx
GRATE FL Elev xxx.xx'

24" x 61' APC

REMOVE INLET

G2 DI (H=4.5')
GRATE TYPE xx
GRATE FL Elev xxx.xx'

IDENTICAL

REMOVE 18" x 115' CSP

REMOVE 18" x 126' CSP

DRAINAGE SYSTEM No. 8

PM 17.76

DRAINAGE PROFILES

SCALE: 1" = 10'

DP-8

REVISED BY | DATE REVISED

CALCULATED-DESIGNED BY | CHECKED BY

Daniel Anderson

FUNCTIONAL SUPERVISOR

Tony Zalik

STATE OF CALIFORNIA - DEPARTMENT OF TRANSPORTATION

Caltrans

LAST REVISION DATE PLOTTED => 5-APR-2023
TIME PLOTTED => 13:24

BORDER LAST REVISED 8/5/2020

USERNAME => s152443
DGN FILE => 01170002451b000_PM 17.76.dgn

RELATIVE BORDER SCALE IS IN INCHES 0 1 2 3

UNIT 0312

PROJECT NUMBER & PHASE 01160000351

Dist	COUNTY	LOCATION CODE	POST MILES TOTAL PROJECT	SHEET No.	TOTAL SHEETS
01	HUM	101			77

REGISTERED CIVIL ENGINEER DATE

PLANS APPROVAL DATE

THE STATE OF CALIFORNIA, ITS OFFICERS OR AGENTS SHALL NOT BE RESPONSIBLE FOR THE ACCURACY OR COMPLETENESS OF SCANNED COPIES OF THIS PLAN SHEET.

REGISTERED PROFESSIONAL ENGINEER No. Exp. CIVIL STATE OF CALIFORNIA

PRELIMINARY DESIGN ONLY FOR REVIEW

23.62%

REMOVE SFES

24" SFES

REMOVE 24" x 280' CSP DD

24" x 276' CSP DD

ELBOW

24" ANCHOR ASSEMBLY

24" ANCHOR ASSEMBLY

GRADE TO DRAIN

49.38%

REMOVE 24" x 75' CSP

24" x 76' APC

EP

EP

GUARDRAIL

ELBOW

REMOVE 24" x 93' CSP DD

24" x 93' CSP DD

24" ANCHOR ASSEMBLY

49.38%

2.33%

REMOVE STEEL PIPE INLET

G2 DI (H=5.0')
GRATE TYPE xx
GRATE FL Elev xxx.xx
(CONNECT TO EXIST. UD)

43.66%

GRAVEL FILTER

RSP

DRAINAGE SYSTEM No. 9

PM 18.25

DRAINAGE PROFILES

SCALE: 1" = 10'

DP-9

REVISED BY | DATE REVISED

CALCULATED-DESIGNED BY

CHECKED BY

Daniel Anderson

FUNCTIONAL SUPERVISOR

Tony Zalik

STATE OF CALIFORNIA - DEPARTMENT OF TRANSPORTATION

Caltrans

LAST REVISION | DATE PLOTTED => 5-APR-2023
03-10-23 | TIME PLOTTED => 13:24

BORDER LAST REVISED 8/5/2020

USERNAME => s152443
DGN FILE => 01170002451b000_PM 18.25.dgn

RELATIVE BORDER SCALE IS IN INCHES 0 1 2 3

UNIT 0312

PROJECT NUMBER & PHASE 01160000351

Dist	COUNTY	LOCATION CODE	POST MILES TOTAL PROJECT	SHEET No.	TOTAL SHEETS
01	HUM	101			77

REGISTERED CIVIL ENGINEER DATE

PLANS APPROVAL DATE

THE STATE OF CALIFORNIA, ITS OFFICERS OR AGENTS SHALL NOT BE RESPONSIBLE FOR THE ACCURACY OR COMPLETENESS OF SCANNED COPIES OF THIS PLAN SHEET.

REGISTERED PROFESSIONAL ENGINEER
No.
Exp.
CIVIL
STATE OF CALIFORNIA

PRELIMINARY DESIGN ONLY FOR REVIEW

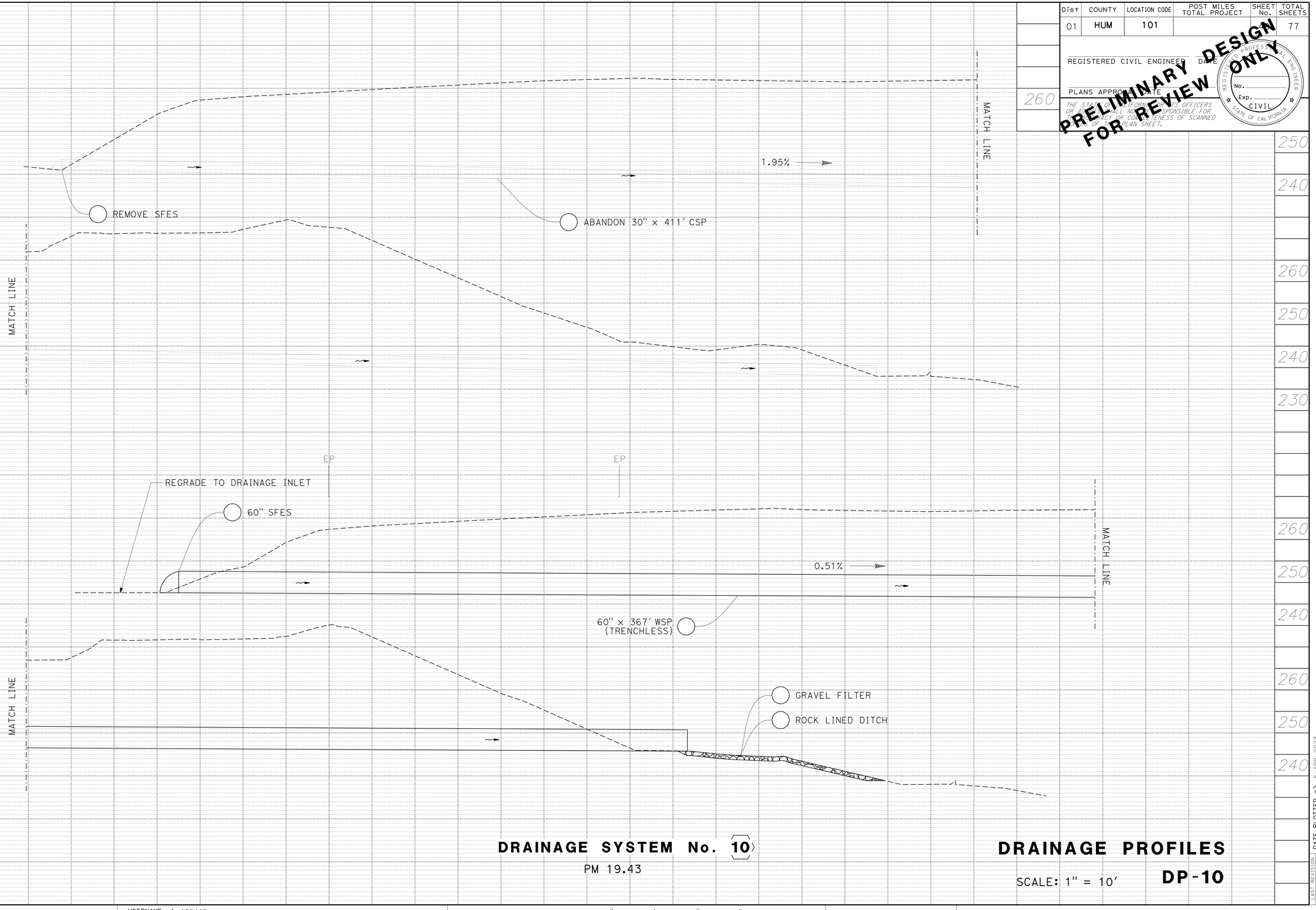

DRAINAGE SYSTEM No. 10

PM 19.43

DRAINAGE PROFILES

SCALE: 1" = 10'

DP-10

REVISED BY | DATE REVISED

CALCULATED-DESIGNED BY: Daniel Anderson

CHECKED BY

FUNCTIONAL SUPERVISOR: Tony Zalik

STATE OF CALIFORNIA - DEPARTMENT OF TRANSPORTATION

Caltrans

LAST REVISION | DATE PLOTTED => 5-APR-2023
TIME PLOTTED => 13:24
03-10-23

Dist	COUNTY	LOCATION CODE	POST MILES TOTAL PROJECT	SHEET No.	TOTAL SHEETS
01	HUM	101			77

REGISTERED CIVIL ENGINEER DATE

PLANS APPROVAL DATE

THE STATE OF CALIFORNIA, ITS OFFICERS OR AGENTS SHALL NOT BE RESPONSIBLE FOR THE ACCURACY OR COMPLETENESS OF SCANNED COPIES OF THIS PLAN SHEET.

REGISTERED PROFESSIONAL ENGINEER No. Exp. CIVIL STATE OF CALIFORNIA

PRELIMINARY DESIGN ONLY FOR REVIEW

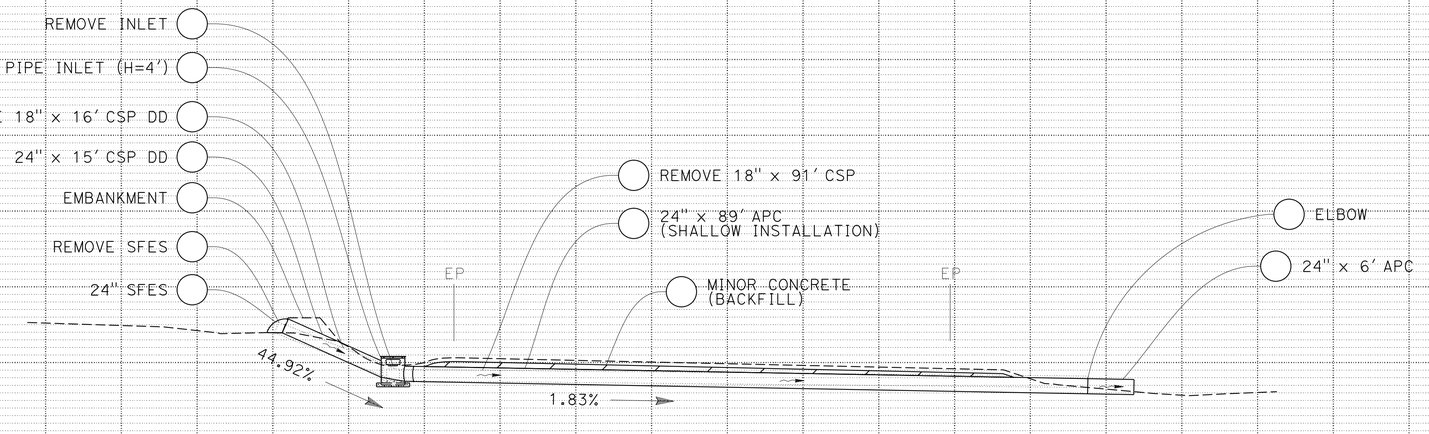

DRAINAGE SYSTEM No. 11

PM 20.63

DRAINAGE PROFILES

SCALE: 1" = 10'

DP-11

STATE OF CALIFORNIA - DEPARTMENT OF TRANSPORTATION

Caltrans

FUNCTIONAL SUPERVISOR: Tony Zalik

CALCULATED-DESIGNED BY

CHECKED BY

REVISED BY: Daniel Anderson

DATE REVISED

LAST REVISION DATE PLOTTED => 5-APR-2023
TIME PLOTTED => 13:25

BORDER LAST REVISED 8/5/2020

USERNAME => s152443
DGN FILE => 0117000245ib000_PM 20.63.dgn

RELATIVE BORDER SCALE IS IN INCHES 0 1 2 3

UNIT 0312

PROJECT NUMBER & PHASE 01160000351

Dist	COUNTY	LOCATION CODE	POST MILES TOTAL PROJECT	SHEET No.	TOTAL SHEETS
01	HUM	101			77

REGISTERED CIVIL ENGINEER DATE

PLANS APPROVAL DATE

THE STATE OF CALIFORNIA, ITS OFFICERS OR AGENTS SHALL NOT BE RESPONSIBLE FOR THE ACCURACY OR COMPLETENESS OF SCANNED COPIES OF THIS PLAN SHEET.

REGISTERED PROFESSIONAL ENGINEER No. Exp. CIVIL STATE OF CALIFORNIA

PRELIMINARY DESIGN ONLY FOR REVIEW

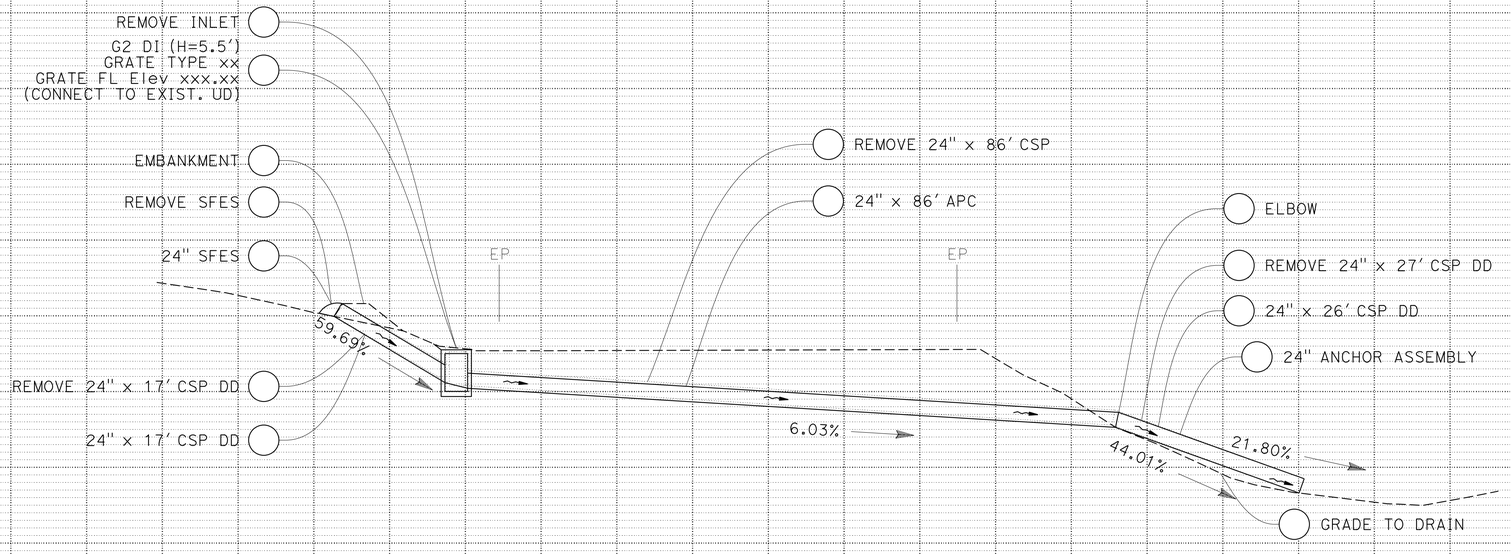

DRAINAGE SYSTEM No. 12

PM 23.46

DRAINAGE PROFILES

SCALE: 1" = 10'

DP-12

REVISED BY | DATE REVISED

Daniel Anderson

CALCULATED-DESIGNED BY | CHECKED BY

FUNCTIONAL SUPERVISOR

Tony Zalik

STATE OF CALIFORNIA - DEPARTMENT OF TRANSPORTATION

Caltrans

LAST REVISION | DATE PLOTTED => 5-APR-2023 | TIME PLOTTED => 13:25

03-10-23

BORDER LAST REVISED 8/5/2020

USERNAME => s152443
DGN FILE => 0117000245ib000_PM 23.46.dgn

RELATIVE BORDER SCALE IS IN INCHES 0 1 2 3

UNIT 0312

PROJECT NUMBER & PHASE 01160000351

Dist	COUNTY	LOCATION CODE	POST MILES TOTAL PROJECT	SHEET No.	TOTAL SHEETS
01	HUM	101			77

REGISTERED CIVIL ENGINEER DATE

PLANS APPROVAL DATE

THE STATE OF CALIFORNIA, ITS OFFICERS OR AGENTS SHALL NOT BE RESPONSIBLE FOR THE ACCURACY OR COMPLETENESS OF SCANNED COPIES OF THIS PLAN SHEET.

REGISTERED PROFESSIONAL ENGINEER No. Exp. CIVIL STATE OF CALIFORNIA

PRELIMINARY DESIGN ONLY FOR REVIEW

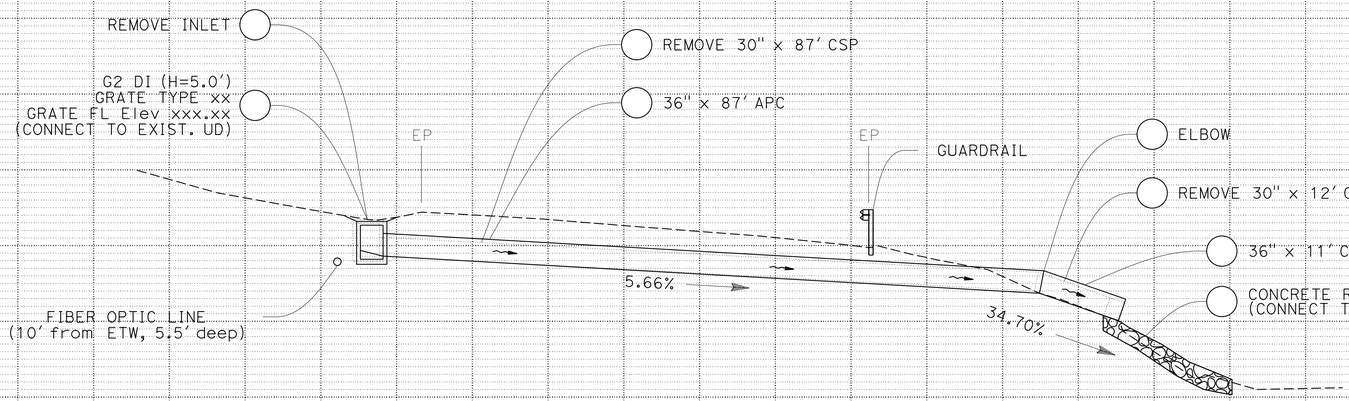

DRAINAGE SYSTEM No. 13

PM 26.16

DRAINAGE PROFILES

SCALE: 1" = 10'

DP-13

LAST REVISION 03-10-23 | DATE PLOTTED => 5-APR-2023 | TIME PLOTTED => 13:25

STATE OF CALIFORNIA - DEPARTMENT OF TRANSPORTATION

Caltrans

FUNCTIONAL SUPERVISOR: Tony Zalik

CALCULATED-DESIGNED BY | CHECKED BY

Daniel Anderson

REVISED BY | DATE REVISED

BORDER LAST REVISED 8/5/2020

USERNAME => s152443
DGN FILE => 0117000245ib000_PM 26.16.dgn

RELATIVE BORDER SCALE IS IN INCHES 0 1 2 3

UNIT 0312

PROJECT NUMBER & PHASE 01160000351

Dist	COUNTY	LOCATION CODE	POST MILES TOTAL PROJECT	SHEET No.	TOTAL SHEETS
01	HUM	101			77

REGISTERED CIVIL ENGINEER DATE

PLANS APPROVAL DATE

THE STATE OF CALIFORNIA, ITS OFFICERS OR AGENTS SHALL NOT BE RESPONSIBLE FOR THE ACCURACY OR COMPLETENESS OF SCANNED COPIES OF THIS PLAN SHEET.

REGISTERED PROFESSIONAL ENGINEER No. Exp. CIVIL STATE OF CALIFORNIA

PRELIMINARY DESIGN ONLY FOR REVIEW

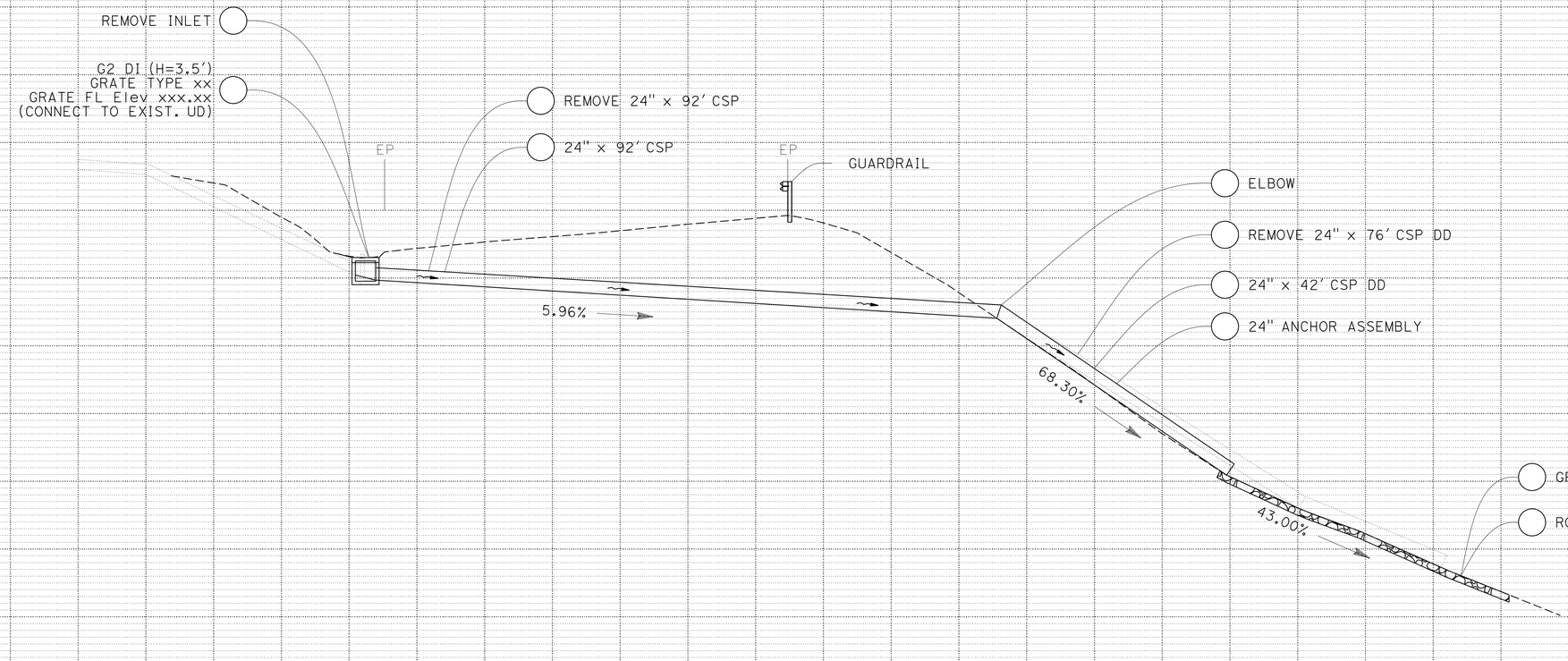

DRAINAGE SYSTEM No. 14

PM 26.78

DRAINAGE PROFILES

SCALE: 1" = 10' **DP-14**

REVISED BY | DATE REVISED

CALCULATED-DESIGNED BY: Daniel Anderson

CHECKED BY

FUNCTIONAL SUPERVISOR: Tony Zalik

STATE OF CALIFORNIA - DEPARTMENT OF TRANSPORTATION

Caltrans

LAST REVISION DATE PLOTTED => 5-APR-2023
TIME PLOTTED => 13:25

BORDER LAST REVISED 8/5/2020

USERNAME => s152443
DGN FILE => 01170000245ib000_PM 26.78.dgn

RELATIVE BORDER SCALE IS IN INCHES 0 1 2 3

UNIT 0312

PROJECT NUMBER & PHASE 01160000351

Dist	COUNTY	LOCATION CODE	POST MILES TOTAL PROJECT	SHEET No.	TOTAL SHEETS
01	HUM	101			77

REGISTERED CIVIL ENGINEER DATE

PLANS APPROVAL DATE

REGISTERED PROFESSIONAL ENGINEER No. Exp. CIVIL STATE OF CALIFORNIA

THE STATE OF CALIFORNIA, ITS OFFICERS OR AGENTS SHALL NOT BE RESPONSIBLE FOR THE ACCURACY OR COMPLETENESS OF SCANNED IMAGES OF THIS PLAN SHEET.

PRELIMINARY DESIGN ONLY FOR REVIEW

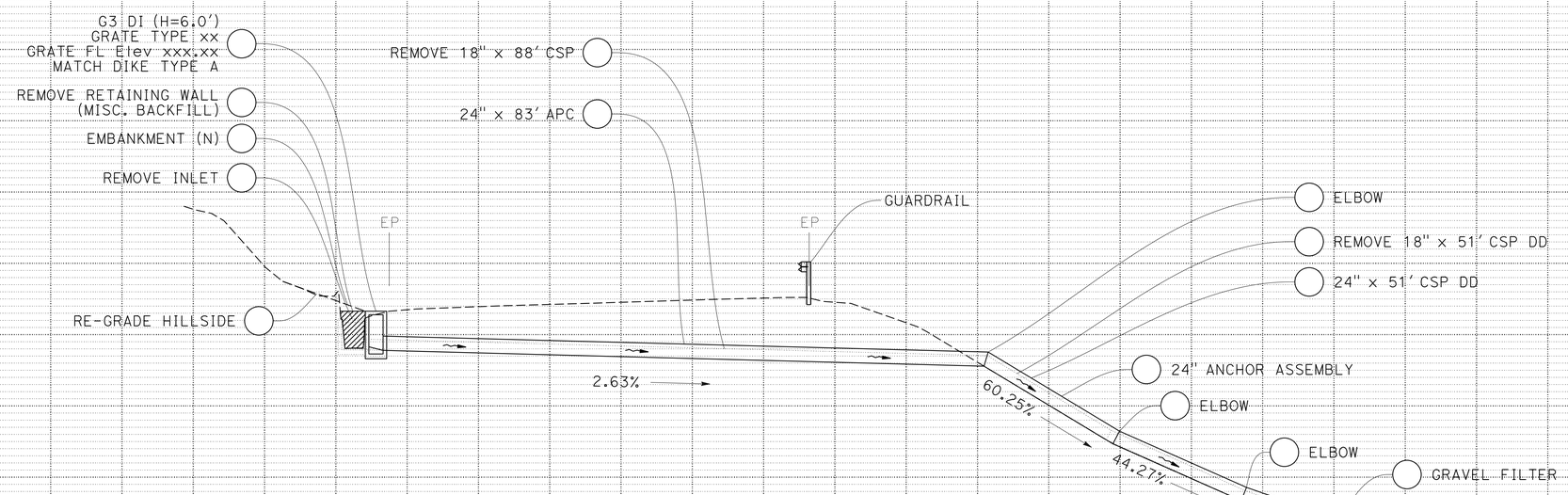

DRAINAGE SYSTEM No. 15

PM 27.52

DRAINAGE PROFILES

SCALE: 1" = 10'

DP-15

STATE OF CALIFORNIA - DEPARTMENT OF TRANSPORTATION

Caltrans

FUNCTIONAL SUPERVISOR: Tony Zalik

CALCULATED-DESIGNED BY

CHECKED BY

Daniel Anderson

REVISED BY | DATE REVISED

LAST REVISION | DATE PLOTTED => 5-APR-2023 | TIME PLOTTED => 13:25

03-10-23

BORDER LAST REVISED 8/5/2020

USERNAME => s152443

DGN FILE => 01170000245ib000_PM 27.52.dgn

RELATIVE BORDER SCALE IS IN INCHES 0 1 2 3

UNIT 0312

PROJECT NUMBER & PHASE 01160000351

Dist	COUNTY	LOCATION CODE	POST MILES TOTAL PROJECT	SHEET No.	TOTAL SHEETS
01	HUM	101		16	77

REGISTERED CIVIL ENGINEER DATE

PLANS APPROVAL DATE

THE STATE OF CALIFORNIA, ITS OFFICERS OR AGENTS SHALL NOT BE RESPONSIBLE FOR THE ACCURACY OR COMPLETENESS OF SCANNED COPIES OF THIS PLAN SHEET.

REGISTERED PROFESSIONAL ENGINEER No. Exp. CIVIL STATE OF CALIFORNIA

PRELIMINARY DESIGN ONLY FOR REVIEW

NOTE:
CONTRACTOR WILL NEED TO ACQUIRE AN ENCROACHMENT PERMIT IF WORK WILL BE CONDUCTED OUTSIDE OF RW

EXCAVATION OF JUNCTION BOX IS EXPECTED TO BE 12' - 25' DEEP. ENGINEERED SHORING PLAN SHOULD BE EXPECTED

APPROXIMATE SURFACE INFORMATION ONLY. INCREASED AREA OF SURVEY WILL BE REQUIRED BEFORE RTL

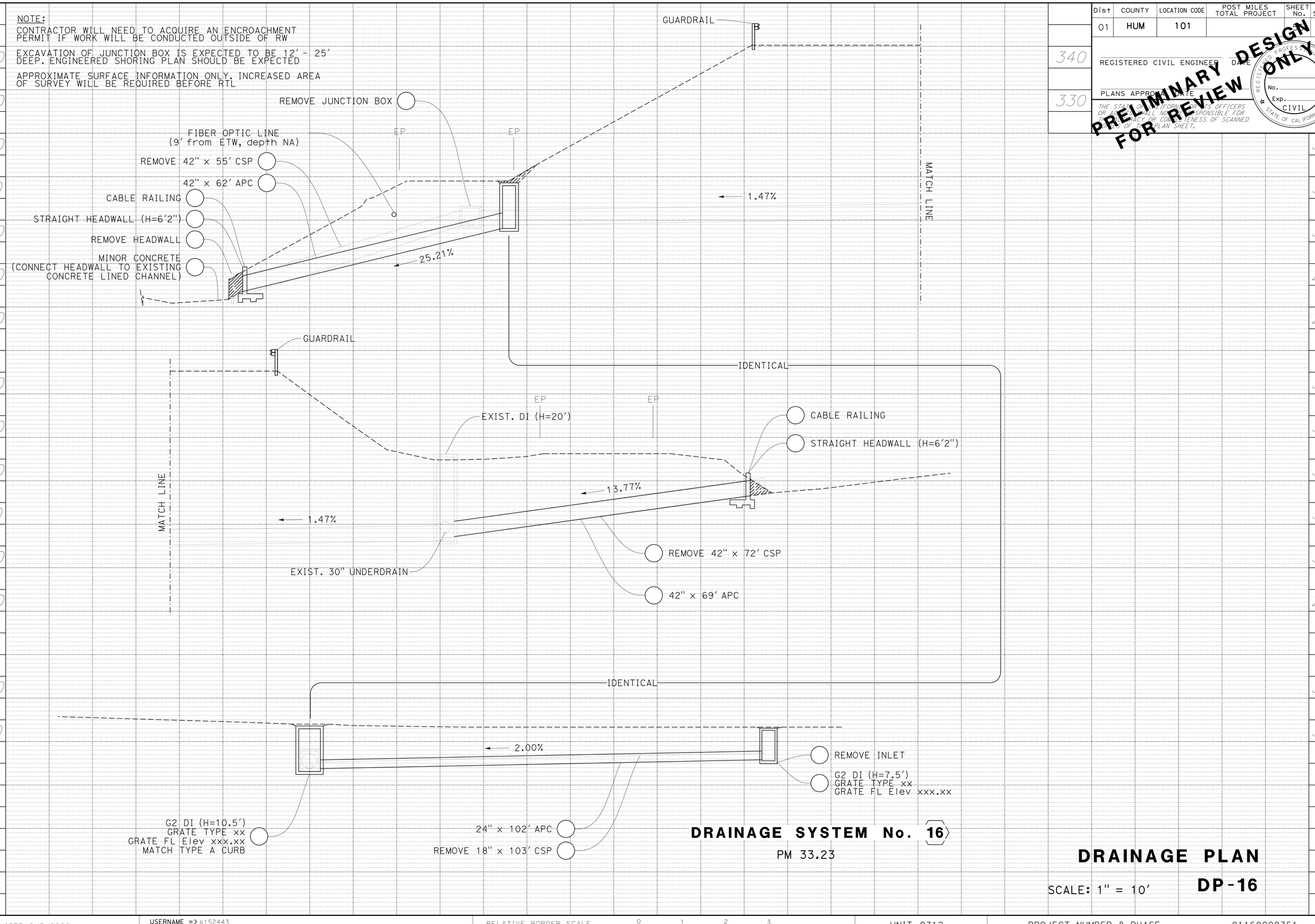

DRAINAGE SYSTEM No. 16

PM 33.23

DRAINAGE PLAN

SCALE: 1" = 10'

DP-16

REVISED BY | DATE REVISED

CALCULATED-DESIGNED BY: Daniel Anderson

CHECKED BY

FUNCTIONAL SUPERVISOR: Tony Zalik

STATE OF CALIFORNIA - DEPARTMENT OF TRANSPORTATION

Caltrans

LAST REVISION | DATE PLOTTED => 5-APR-2023 | TIME PLOTTED => 13:25

03-10-23

BORDER LAST REVISED 8/5/2020

USERNAME => s152443
DGN FILE => 0117000245ib000_PM 33.23.dgn

RELATIVE BORDER SCALE IS IN INCHES 0 1 2 3

UNIT 0312

PROJECT NUMBER & PHASE 01160000351

Dist	COUNTY	LOCATION CODE	POST MILES TOTAL PROJECT	SHEET No.	TOTAL SHEETS
01	HUM	101			77

REGISTERED CIVIL ENGINEER DATE

PLANS APPROVAL DATE

THE STATE OF CALIFORNIA, ITS OFFICERS OR AGENTS SHALL NOT BE RESPONSIBLE FOR THE ACCURACY OR COMPLETENESS OF SCANNED IMAGES OF THIS PLAN SHEET.

REGISTERED PROFESSIONAL ENGINEER No. Exp. CIVIL STATE OF CALIFORNIA

PRELIMINARY DESIGN ONLY FOR REVIEW

REVISED BY | DATE REVISED

Daniel Anderson

CALCULATED-DESIGNED BY | CHECKED BY

FUNCTIONAL SUPERVISOR

Tony Zalik

STATE OF CALIFORNIA - DEPARTMENT OF TRANSPORTATION

Caltrans

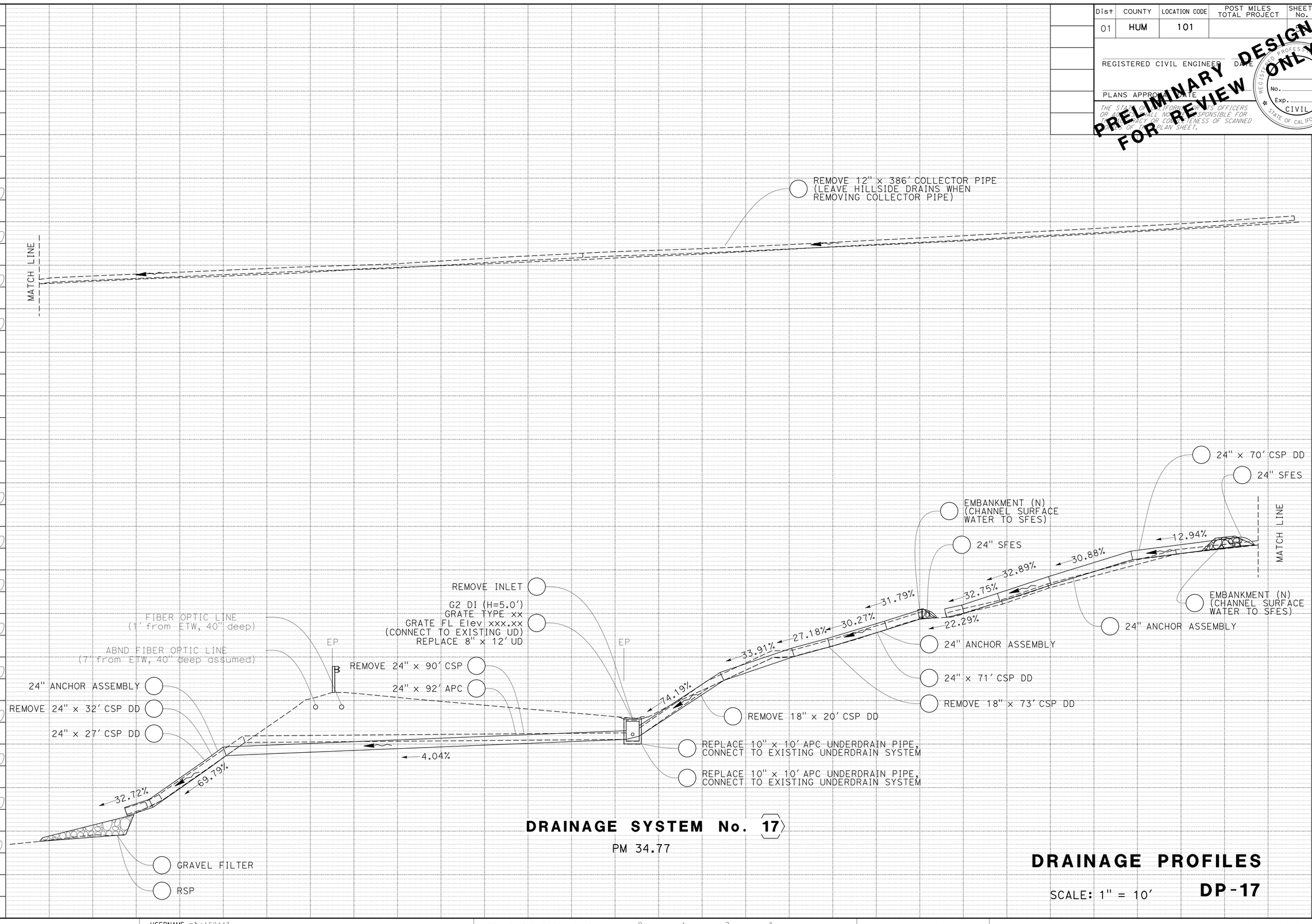

DRAINAGE SYSTEM No. 17

PM 34.77

DRAINAGE PROFILES

SCALE: 1" = 10'

DP-17

LAST REVISION | DATE PLOTTED => 5-APR-2023
03-10-23 | TIME PLOTTED => 13:25

BORDER LAST REVISED 8/5/2020

USERNAME => s152443
DGN FILE => 01170002451b000_PM 34.77.dgn

RELATIVE BORDER SCALE IS IN INCHES 0 1 2 3

UNIT 0312

PROJECT NUMBER & PHASE 01160000351

Dist	COUNTY	LOCATION CODE	POST MILES TOTAL PROJECT	SHEET No.	TOTAL SHEETS
01	HUM	101			77

REGISTERED CIVIL ENGINEER DATE

PLANS APPROVAL DATE

THE STATE OF CALIFORNIA, ITS OFFICERS OR AGENTS SHALL NOT BE RESPONSIBLE FOR THE ACCURACY OR COMPLETENESS OF SCANNED COPIES OF THIS PLAN SHEET.

REGISTERED PROFESSIONAL ENGINEER No. Exp. CIVIL STATE OF CALIFORNIA

PRELIMINARY DESIGN ONLY FOR REVIEW

NOTE:

ABANDONED TELECOMMUNICATION (FIBEROPTIC CABLE) IS KNOWN TO PUNCTURE EXISTING CSP BELLOW GUARDRAIL ON WEST SIDE OF HIGHWAY 101, UTILITY RELOCATION OF MAY BE NECESSARY TO INSTALL CULVERT IN THE PROPER ALIGNMENT AND GRADE

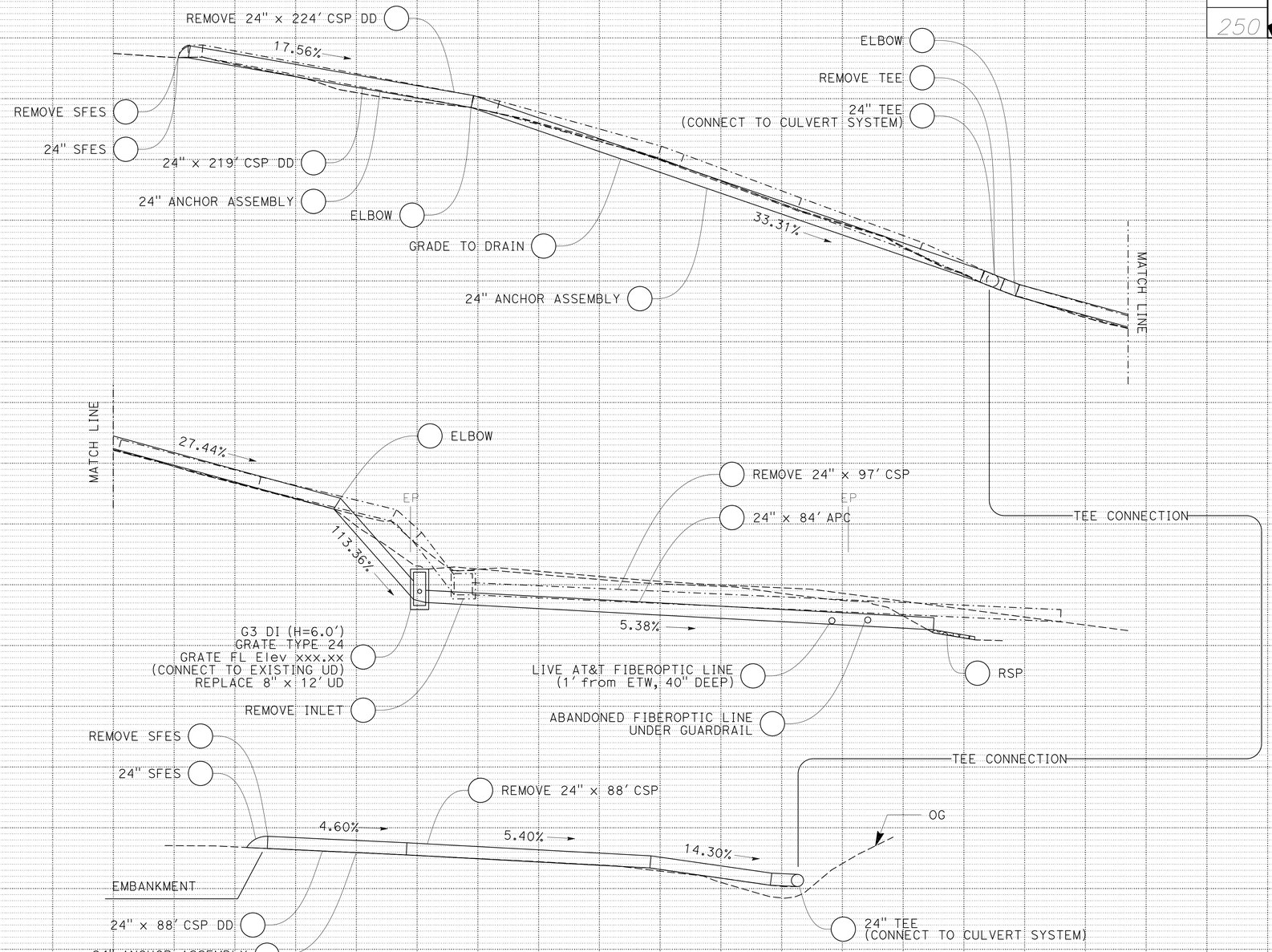

DRAINAGE SYSTEM No. 18

PM 35.00

DRAINAGE PROFILES

SCALE: 1" = 10'

DP-18

REVISED BY | DATE REVISED

Daniel Anderson

CALCULATED-DESIGNED BY | CHECKED BY

FUNCTIONAL SUPERVISOR

Tony Zalik

STATE OF CALIFORNIA - DEPARTMENT OF TRANSPORTATION

Caltrans

LAST REVISION 03-10-23 | DATE PLOTTED => 5-APR-2023 | TIME PLOTTED => 13:25

BORDER LAST REVISED 8/5/2020 | USERNAME => s152443 | DGN FILE => 0117000245ib000_PM 35.00.dgn | RELATIVE BORDER SCALE IS IN INCHES 0 1 2 3 | UNIT 0312 | PROJECT NUMBER & PHASE 01160000351

Dist	COUNTY	LOCATION CODE	POST MILES TOTAL PROJECT	SHEET No.	TOTAL SHEETS
01	HUM	101			77

REGISTERED CIVIL ENGINEER DATE

PLANS APPROVAL DATE

THE STATE OF CALIFORNIA, ITS OFFICERS OR AGENTS SHALL NOT BE RESPONSIBLE FOR THE ACCURACY OR COMPLETENESS OF SCANNED COPIES OF THIS PLAN SHEET.

REGISTERED PROFESSIONAL ENGINEER No. Exp. CIVIL STATE OF CALIFORNIA

PRELIMINARY DESIGN ONLY FOR REVIEW

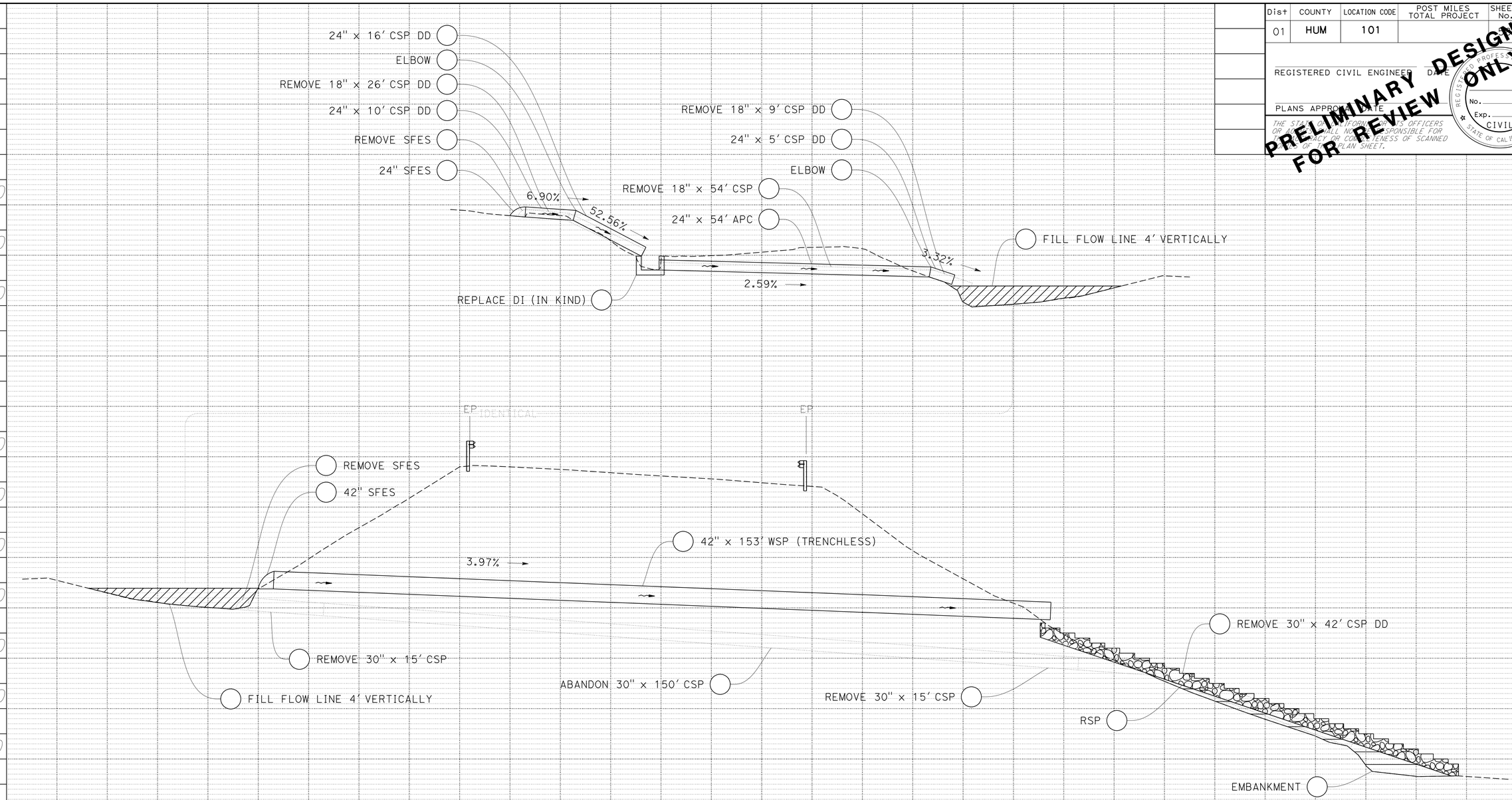

DRAINAGE SYSTEM No. 19

PM 37.64

DRAINAGE PROFILES

SCALE: 1" = 10'

DP-19

REVISED BY | DATE REVISED

Daniel Anderson

CALCULATED-DESIGNED BY | CHECKED BY

FUNCTIONAL SUPERVISOR: Tony Zalik

STATE OF CALIFORNIA - DEPARTMENT OF TRANSPORTATION

Caltrans

LAST REVISION DATE PLOTTED => 5-APR-2023
TIME PLOTTED => 13:25
03-10-23

BORDER LAST REVISED 8/5/2020

USERNAME => s152443
DGN FILE => 0117000245ib000_PM 37.64.dgn

RELATIVE BORDER SCALE IS IN INCHES 0 1 2 3

UNIT 0312

PROJECT NUMBER & PHASE 01160000351

Dist	COUNTY	LOCATION CODE	POST MILES TOTAL PROJECT	SHEET No.	TOTAL SHEETS
01	HUM	101			77

REGISTERED CIVIL ENGINEER DATE

PLANS APPROVAL DATE

THE STATE OF CALIFORNIA, ITS OFFICERS OR AGENTS SHALL NOT BE RESPONSIBLE FOR THE ACCURACY OR COMPLETENESS OF SCANNED COPIES OF THIS PLAN SHEET.

REGISTERED PROFESSIONAL ENGINEER No. Exp. CIVIL STATE OF CALIFORNIA

PRELIMINARY DESIGN ONLY FOR REVIEW

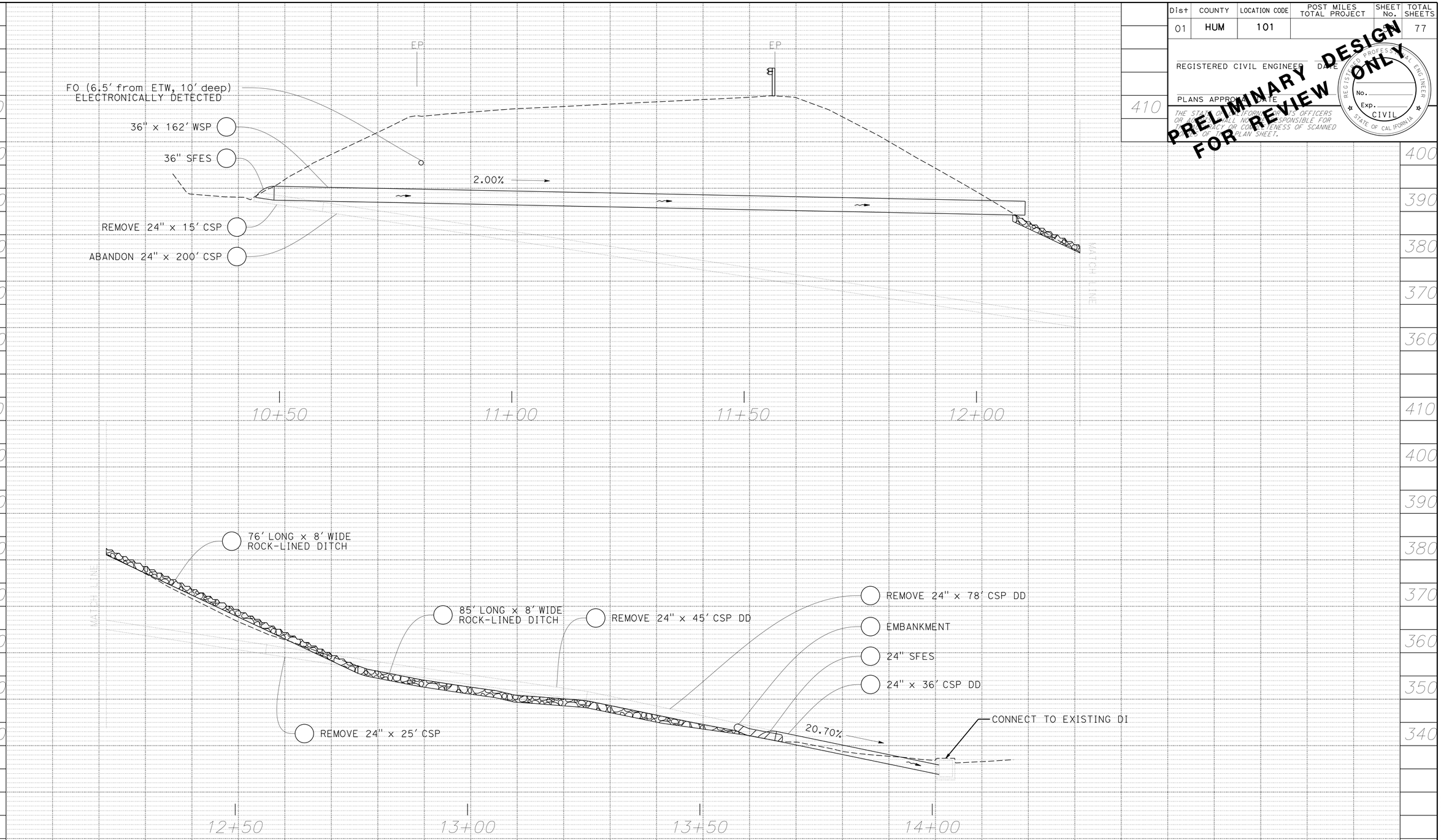

DRAINAGE SYSTEM No. 20

PM 39.01

DRAINAGE PROFILES

SCALE: 1" = 10'

DP-20

REVISED BY | DATE REVISED

Daniel Anderson

CALCULATED-DESIGNED BY | CHECKED BY

FUNCTIONAL SUPERVISOR

Tony Zalik

STATE OF CALIFORNIA - DEPARTMENT OF TRANSPORTATION

Caltrans

LAST REVISION DATE PLOTTED => 5-APR-2023
TIME PLOTTED => 13:25
03-10-23

BORDER LAST REVISED 8/5/2020

USERNAME => s152443
DGN FILE => 0117000245ib000_PM 39.01.dgn

RELATIVE BORDER SCALE IS IN INCHES 0 1 2 3

UNIT 0312

PROJECT NUMBER & PHASE 01160000351

Dist	COUNTY	LOCATION CODE	POST MILES TOTAL PROJECT	SHEET No.	TOTAL SHEETS
01	HUM	101		77	

REGISTERED CIVIL ENGINEER DATE

PLANS APPROVAL DATE

THE STATE OF CALIFORNIA, ITS OFFICERS OR AGENTS SHALL NOT BE RESPONSIBLE FOR THE ACCURACY OR COMPLETENESS OF SCANNED COPIES OF THIS PLAN SHEET.

REGISTERED PROFESSIONAL ENGINEER No. Exp. CIVIL STATE OF CALIFORNIA

PRELIMINARY DESIGN ONLY FOR REVIEW

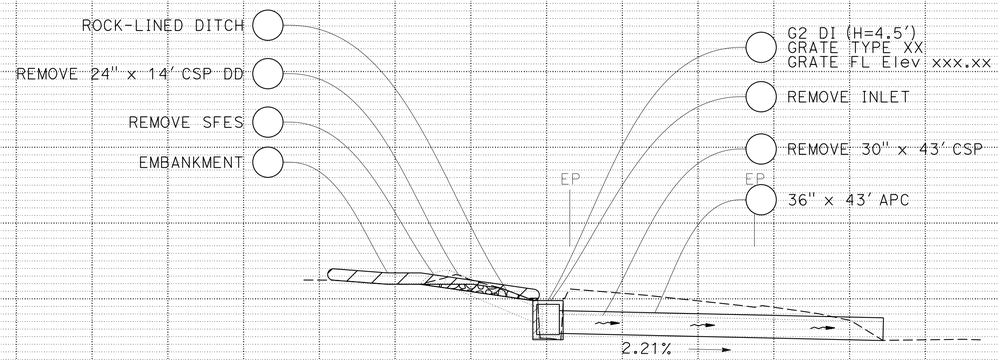

DRAINAGE SYSTEM No. 21

PM 39.23

DRAINAGE PROFILES

SCALE: 1" = 10'

DP-21

REVISED BY

DATE REVISED

Daniel Anderson

CALCULATED-DESIGNED BY

CHECKED BY

380

370

FUNCTIONAL SUPERVISOR

Tony Zalik

STATE OF CALIFORNIA - DEPARTMENT OF TRANSPORTATION

Caltrans

LAST REVISION DATE PLOTTED => 5-APR-2023
TIME PLOTTED => 13:25

BORDER LAST REVISED 8/5/2020

USERNAME => s152443
DGN FILE => 01170002451b000_PM 39.23.dgn

RELATIVE BORDER SCALE IS IN INCHES 0 1 2 3

UNIT 0312

PROJECT NUMBER & PHASE 01160000351

Dist	COUNTY	LOCATION CODE	POST MILES TOTAL PROJECT	SHEET No.	TOTAL SHEETS
01	HUM	101		22	77

REGISTERED CIVIL ENGINEER DATE

PLANS APPROVAL DATE

THE STATE OF CALIFORNIA, ITS OFFICERS OR AGENTS SHALL NOT BE RESPONSIBLE FOR THE ACCURACY OR COMPLETENESS OF SCANNED IMAGES OF THIS PLAN SHEET.

REGISTERED PROFESSIONAL ENGINEER No. Exp. CIVIL STATE OF CALIFORNIA

PRELIMINARY DESIGN ONLY FOR REVIEW

REMOVE 30" x 10' CSP
REMOVE HEADWALL
EMBANKMENT (N)
(COVER EXISTING INLET)
ABANDON 30" x 245' CSP
MATCH LINE
10+50
11+00
11+50
12+00
MATCH LINE
REMOVE 30" x 10' CSP
REMOVE DI
REMOVE 30" x 72' CSP
FO (8' from ETW, 5' deep)
ROADWAY EXCAVATION
(CREATE NEW INLET POINT)
CABLE RAILING
HEADWALL (H=8')
EP
12+50
EP
13+00
36" x 266' WSP (TRENCHLESS)
EP
13+50
14+00
MATCH LINE
2.00%
EP
10+50
11+00
11+50
12+00
MATCH LINE
BURRIED ELECTRICAL
(11' from ETW, 2.5' deep)
ELECTRONICALLY DETECTED
REPLACE OVERSIDE DRAIN
G2 DI (H=5.5')
GRATE TYPE xx
GRATE FL Elev xxx.xx
1.00%
36" x 73' APC
ROCK-LINED DITCH
12+50
13+00
13+50
14+00

DRAINAGE SYSTEM No. 22

PM 39.65

DRAINAGE PROFILES

SCALE: 1" = 10'

DP-22

CALCULATED-DESIGNED BY Daniel Anderson
CHECKED BY Tony Zoli
DATE REVISED
FUNCTIONAL SUPERVISOR
STATE OF CALIFORNIA - DEPARTMENT OF TRANSPORTATION
Caltrans

LAST REVISION DATE PLOTTED => 5-APR-2023
TIME PLOTTED => 13:25
03-10-23

BORDER LAST REVISED 8/5/2020

USERNAME => s152443
DGN FILE => 0117000245ib000_PM 39.65.dgn

RELATIVE BORDER SCALE IS IN INCHES 0 1 2 3

UNIT 0312

PROJECT NUMBER & PHASE 01160000351

Dist	COUNTY	LOCATION CODE	POST MILES TOTAL PROJECT	SHEET No.	TOTAL SHEETS
01	HUM	101		23	77

REGISTERED CIVIL ENGINEER DATE

PLANS APPROVAL DATE

REGISTERED PROFESSIONAL ENGINEER No. Exp. CIVIL STATE OF CALIFORNIA

THE STATE OF CALIFORNIA, ITS OFFICERS OR AGENTS SHALL NOT BE RESPONSIBLE FOR THE ACCURACY OR COMPLETENESS OF SCANNED OR COPIED PLAN SHEET.

PRELIMINARY DESIGN ONLY FOR REVIEW

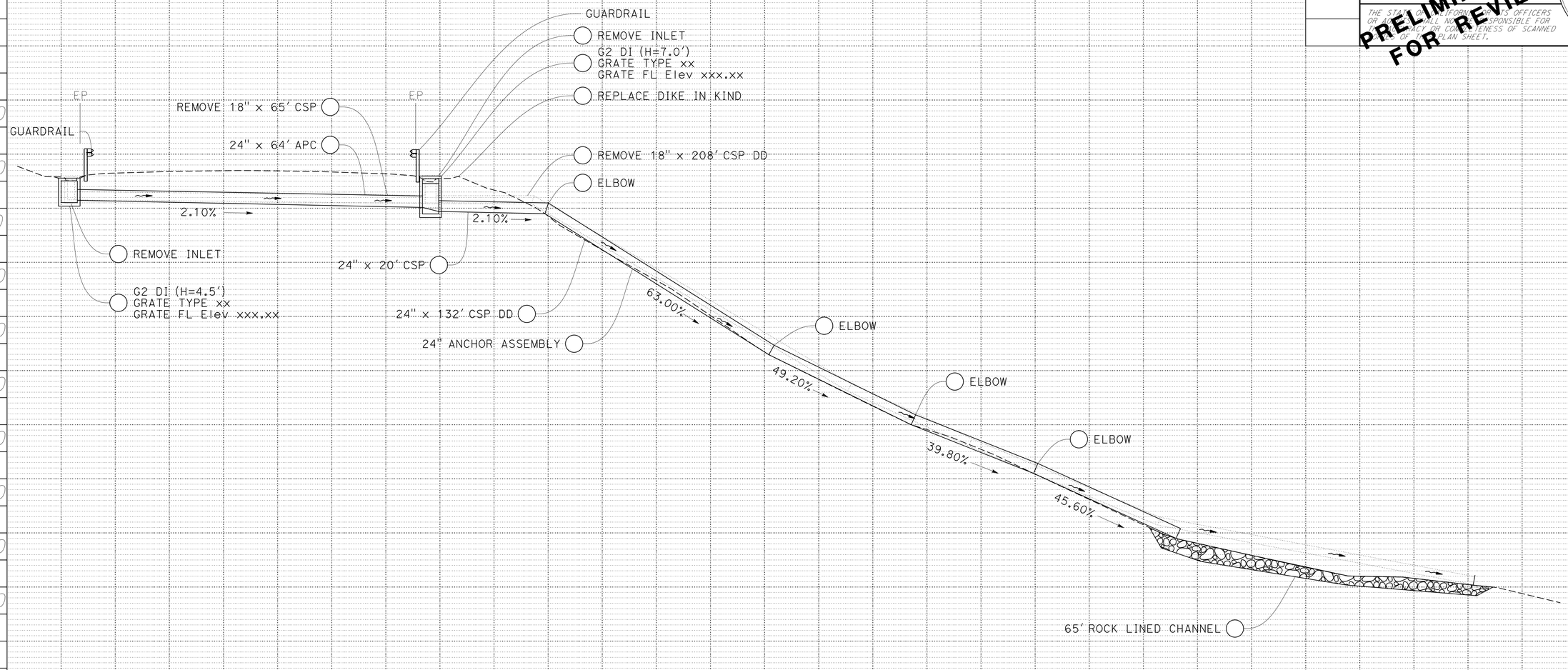

DRAINAGE SYSTEM No. 23

PM 40.38

DRAINAGE PROFILES

SCALE: 1" = 10'

DP-23

REVISED BY | DATE REVISED

Daniel Anderson

CALCULATED-DESIGNED BY | CHECKED BY

FUNCTIONAL SUPERVISOR: Tony Zalik

STATE OF CALIFORNIA - DEPARTMENT OF TRANSPORTATION

Caltrans

LAST REVISION 03-10-23 | DATE PLOTTED => 5-APR-2023 | TIME PLOTTED => 13:25

BORDER LAST REVISED 8/5/2020

USERNAME => s152443
DGN FILE => 0117000245ib000_PM 40.38.dgn

RELATIVE BORDER SCALE IS IN INCHES 0 1 2 3

UNIT 0312

PROJECT NUMBER & PHASE 01160000351

Dist	COUNTY	LOCATION CODE	POST MILES TOTAL PROJECT	SHEET No.	TOTAL SHEETS
01	HUM	101		24	77

REGISTERED CIVIL ENGINEER DATE

PLANS APPROVAL DATE

THE STATE OF CALIFORNIA, ITS OFFICERS OR AGENTS SHALL NOT BE RESPONSIBLE FOR THE ACCURACY OR COMPLETENESS OF SCANNED COPIES OF THIS PLAN SHEET.

REGISTERED PROFESSIONAL ENGINEER No. Exp. CIVIL STATE OF CALIFORNIA

PRELIMINARY DESIGN ONLY FOR REVIEW

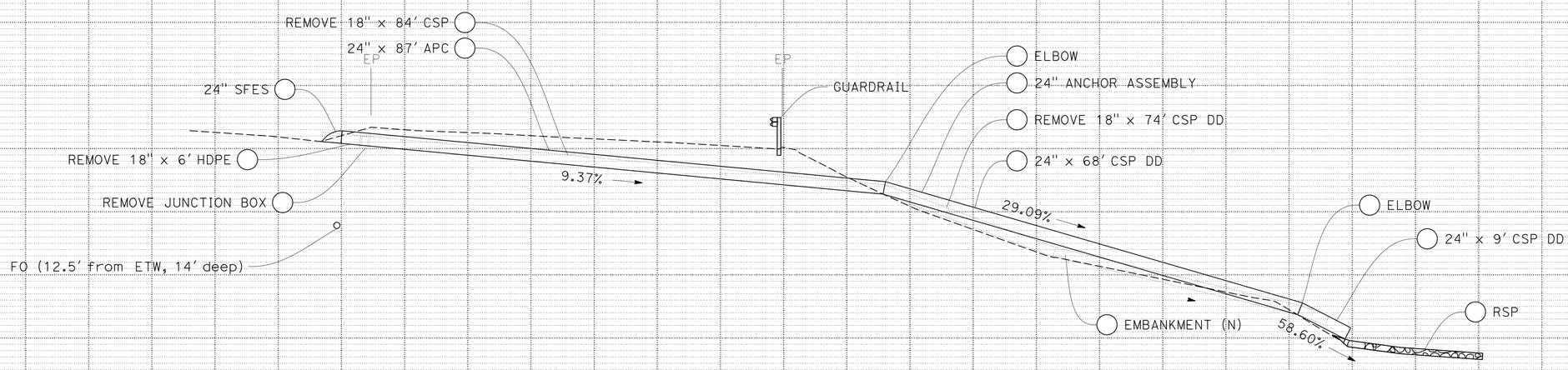

DRAINAGE SYSTEM No. 24

PM 41.45

DRAINAGE PROFILES

SCALE: 1" = 10'

DP-24

STATE OF CALIFORNIA - DEPARTMENT OF TRANSPORTATION

Caltrans

FUNCTIONAL SUPERVISOR: Tony Zalik

CALCULATED-DESIGNED BY

CHECKED BY

Daniel Anderson

REVISED BY

DATE REVISED

LAST REVISION DATE PLOTTED => 5-APR-2023
TIME PLOTTED => 13:25
03-10-23

BORDER LAST REVISED 8/5/2020

USERNAME => s152443
DGN FILE => 01170002451b000_PM 41.45.dgn

RELATIVE BORDER SCALE IS IN INCHES 0 1 2 3

UNIT 0312

PROJECT NUMBER & PHASE 01160000351

Dist	COUNTY	LOCATION CODE	POST MILES TOTAL PROJECT	SHEET No.	TOTAL SHEETS
01	HUM	101			77

REGISTERED CIVIL ENGINEER DATE

PLANS APPROVAL DATE

REGISTERED PROFESSIONAL ENGINEER No. Exp. CIVIL STATE OF CALIFORNIA

THE STATE OF CALIFORNIA, ITS OFFICERS OR AGENTS SHALL NOT BE RESPONSIBLE FOR THE ACCURACY OR COMPLETENESS OF SCANNED COPIES OF THIS PLAN SHEET.

PRELIMINARY DESIGN ONLY FOR REVIEW

REVISED BY | DATE REVISED

Daniel Anderson

CALCULATED-DESIGNED BY | CHECKED BY

FUNCTIONAL SUPERVISOR

Tony Zalik

STATE OF CALIFORNIA - DEPARTMENT OF TRANSPORTATION

Caltrans

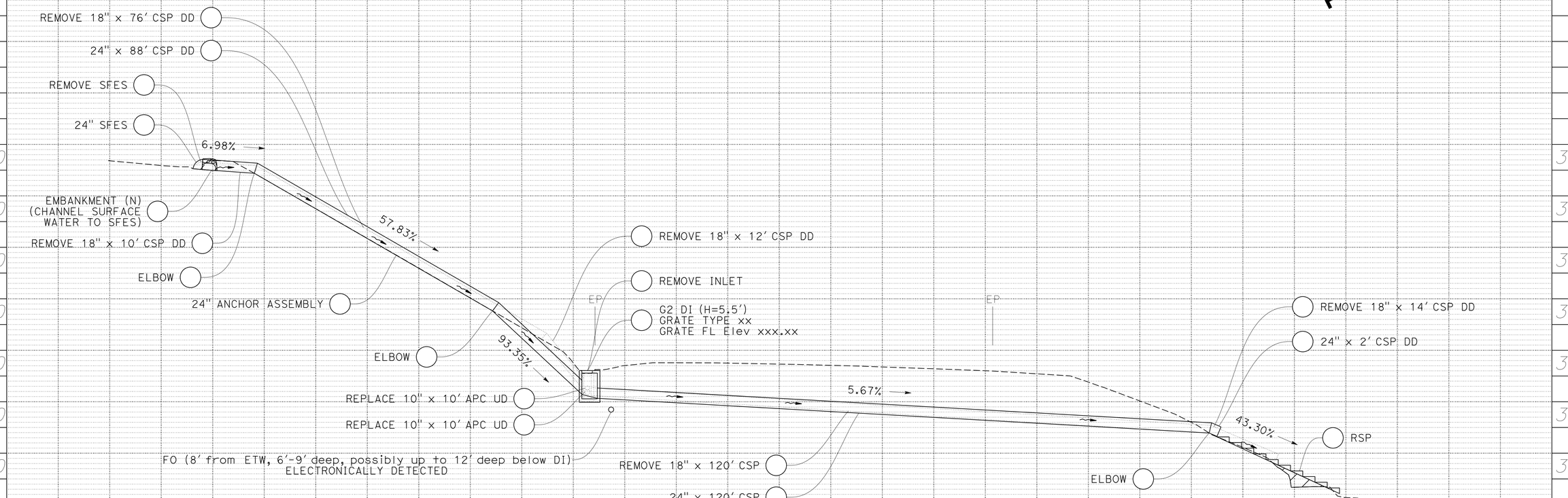

DRAINAGE SYSTEM No. 25

PM 41.69

DRAINAGE PROFILES

SCALE: 1" = 10'

DP-25

LAST REVISION | DATE PLOTTED => 5-APR-2023
03-10-23 | TIME PLOTTED => 13:25

BORDER LAST REVISED 8/5/2020

USERNAME => s152443
DGN FILE => 01170002451b000_PM 41.69.dgn

RELATIVE BORDER SCALE IS IN INCHES 0 1 2 3

UNIT 0312

PROJECT NUMBER & PHASE 01160000351

Dist	COUNTY	LOCATION CODE	POST MILES TOTAL PROJECT	SHEET No.	TOTAL SHEETS
01	HUM	101			77

REGISTERED CIVIL ENGINEER DATE

PLANS APPROVAL DATE

THE STATE OF CALIFORNIA, ITS OFFICERS OR AGENTS SHALL NOT BE RESPONSIBLE FOR THE ACCURACY OR COMPLETENESS OF SCANNED COPIES OF THIS PLAN SHEET.

REGISTERED PROFESSIONAL ENGINEER No. Exp. CIVIL STATE OF CALIFORNIA

PRELIMINARY DESIGN ONLY FOR REVIEW

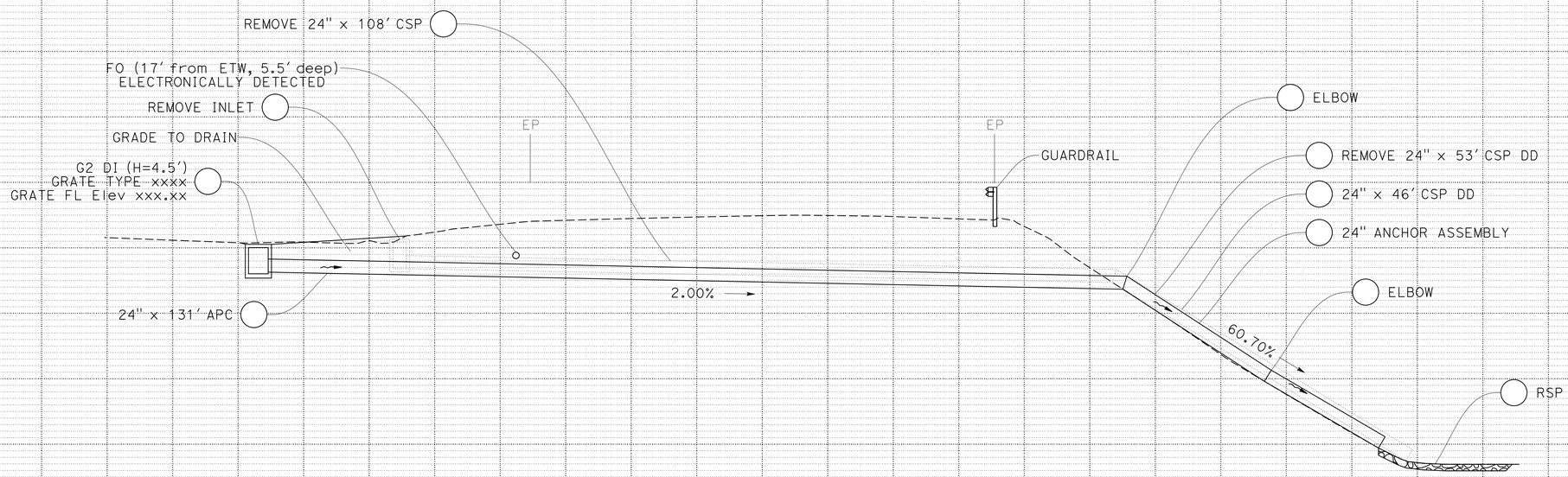

DRAINAGE SYSTEM No. 26

PM 42.12

DRAINAGE PROFILES

SCALE: 1" = 10'

DP-26

STATE OF CALIFORNIA - DEPARTMENT OF TRANSPORTATION

Caltrans

FUNCTIONAL SUPERVISOR: Tony Zalik

CALCULATED-DESIGNED BY

CHECKED BY

REVISED BY: Daniel Anderson

DATE REVISED

LAST REVISION DATE PLOTTED => 5-APR-2023
TIME PLOTTED => 13:26
03-10-23

BORDER LAST REVISED 8/5/2020

USERNAME => s152443
DGN FILE => 01170002451b000_PM 42.12.dgn

RELATIVE BORDER SCALE IS IN INCHES 0 1 2 3

UNIT 0312

PROJECT NUMBER & PHASE 01160000351

Dist	COUNTY	LOCATION CODE	POST MILES TOTAL PROJECT	SHEET No.	TOTAL SHEETS
01	HUM	101		27	77

REGISTERED CIVIL ENGINEER DATE

PLANS APPROVAL DATE

THE STATE OF CALIFORNIA, ITS OFFICERS OR AGENTS SHALL NOT BE RESPONSIBLE FOR THE ACCURACY OR COMPLETENESS OF SCANNED COPIES OF THIS PLAN SHEET.

REGISTERED PROFESSIONAL ENGINEER No. Exp. CIVIL STATE OF CALIFORNIA

PRELIMINARY DESIGN ONLY FOR REVIEW

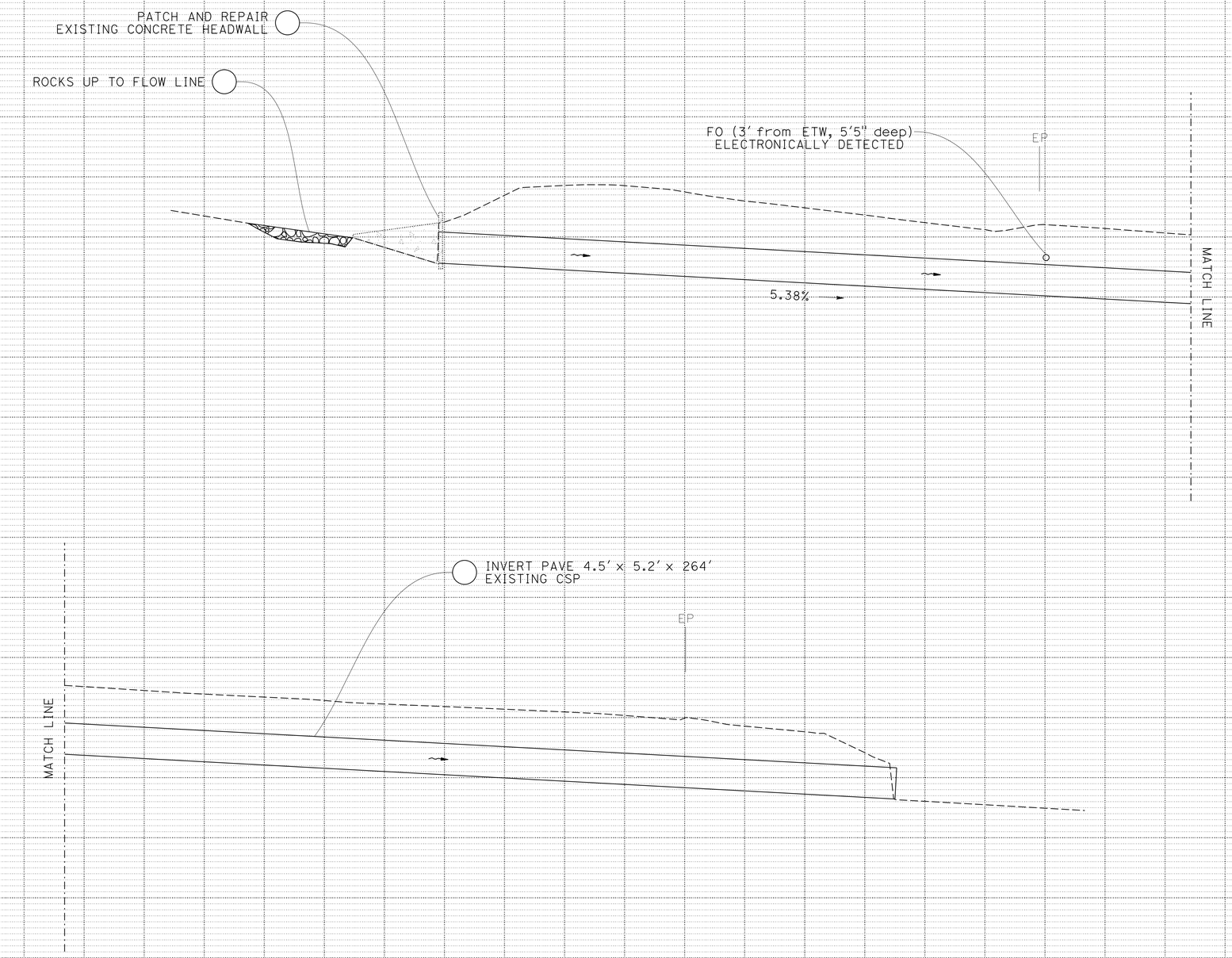

DRAINAGE SYSTEM No. 27

PM 42.34

DRAINAGE PROFILES

SCALE: 1" = 10'

DP-27

REVISED BY | DATE REVISED

Daniel Anderson

CALCULATED-DESIGNED BY | CHECKED BY

FUNCTIONAL SUPERVISOR: Tony Zalik

STATE OF CALIFORNIA - DEPARTMENT OF TRANSPORTATION

Caltrans

LAST REVISION | DATE PLOTTED => 5-APR-2023
03-10-23 | TIME PLOTTED => 13:26

BORDER LAST REVISED 8/5/2020

USERNAME => s152443
DGN FILE => 01170002451b000_PM 42.34.dgn

RELATIVE BORDER SCALE IS IN INCHES 0 1 2 3

UNIT 0312

PROJECT NUMBER & PHASE 01160000351

Dist	COUNTY	LOCATION CODE	POST MILES TOTAL PROJECT	SHEET No.	TOTAL SHEETS
01	HUM	101		77	

REGISTERED CIVIL ENGINEER DATE

PLANS APPROVAL DATE

REGISTERED PROFESSIONAL ENGINEER No. Exp. CIVIL STATE OF CALIFORNIA

THE STATE OF CALIFORNIA, ITS OFFICERS OR AGENTS SHALL NOT BE RESPONSIBLE FOR THE ACCURACY OR COMPLETENESS OF SCANNED IMAGES OF THIS PLAN SHEET.

PRELIMINARY DESIGN ONLY FOR REVIEW

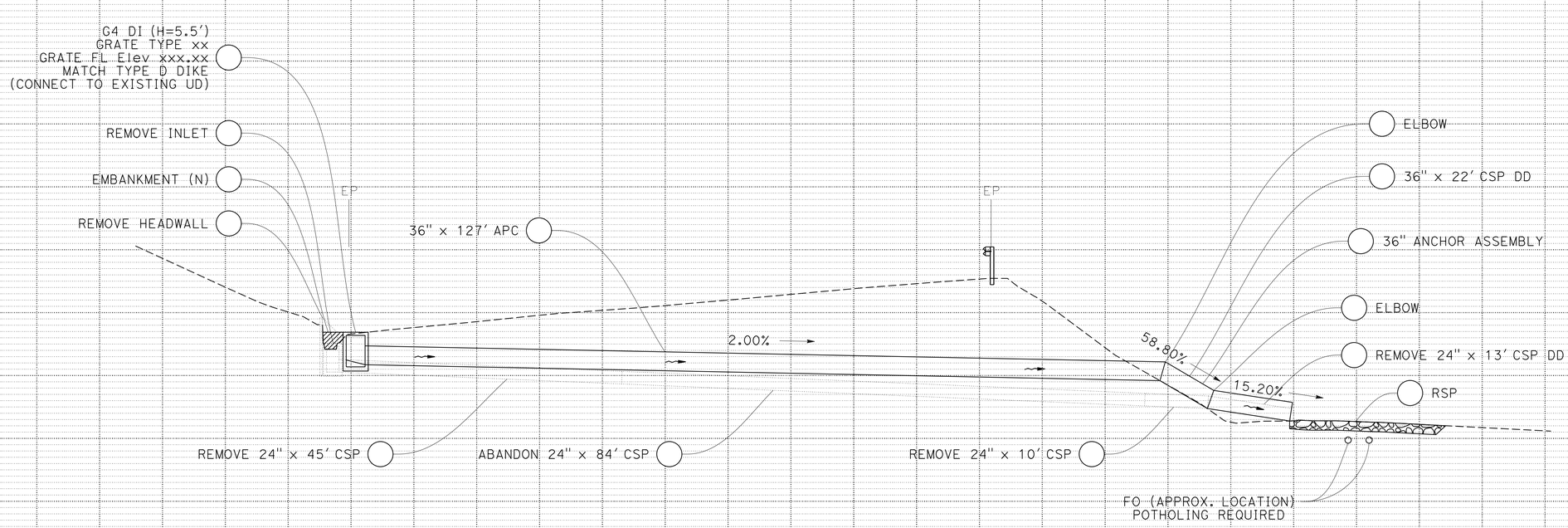

DRAINAGE SYSTEM No. 28

PM 43.17

DRAINAGE PROFILES

SCALE: 1" = 10'

DP-28

STATE OF CALIFORNIA - DEPARTMENT OF TRANSPORTATION
Caltrans

FUNCTIONAL SUPERVISOR: Tony Zalik

CALCULATED-DESIGNED BY

CHECKED BY

REVISED BY

DATE REVISED: Daniel Anderson

LAST REVISION DATE PLOTTED => 5-APR-2023
TIME PLOTTED => 13:26
03-10-23

BORDER LAST REVISED 8/5/2020

USERNAME => s152443
DGN FILE => 01170002451b000_PM 43.17.dgn

RELATIVE BORDER SCALE IS IN INCHES 0 1 2 3

UNIT 0312

PROJECT NUMBER & PHASE 01160000351

Dist	COUNTY	LOCATION CODE	POST MILES TOTAL PROJECT	SHEET No.	TOTAL SHEETS
01	HUM	101			77

REGISTERED CIVIL ENGINEER DATE

PLANS APPROVAL DATE

REGISTERED PROFESSIONAL ENGINEER No. Exp. CIVIL STATE OF CALIFORNIA

THE STATE OF CALIFORNIA, ITS OFFICERS OR AGENTS SHALL NOT BE RESPONSIBLE FOR THE ACCURACY OR COMPLETENESS OF SCANNED COPIES OF THIS PLAN SHEET.

PRELIMINARY DESIGN ONLY FOR REVIEW

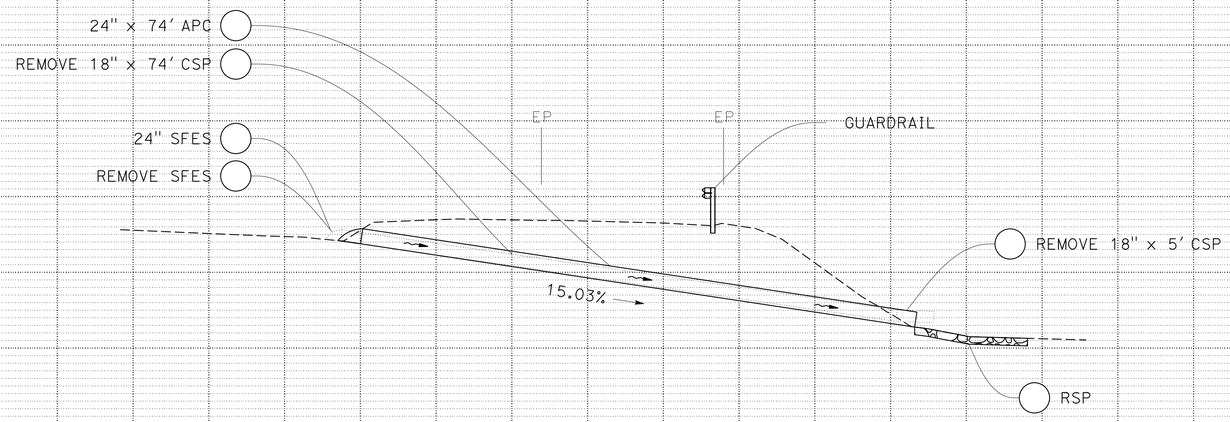

PART A

DRAINAGE SYSTEM No. 29

PM 43.35/ 43.37

DRAINAGE PROFILES

SCALE: 1" = 10'

DP-29

CALCULATED-DESIGNED BY

CHECKED BY

REVISED BY

DATE REVISED

Daniel Anderson

FUNCTIONAL SUPERVISOR

Tony Zalik

STATE OF CALIFORNIA - DEPARTMENT OF TRANSPORTATION

Caltrans

LAST REVISION DATE PLOTTED => 5-APR-2023
TIME PLOTTED => 13:26
03-10-23

BORDER LAST REVISED 8/5/2020

USERNAME => s152443
DGN FILE => 0117000245ib000_PM 43.35.dgn

RELATIVE BORDER SCALE IS IN INCHES 0 1 2 3

UNIT 0312

PROJECT NUMBER & PHASE 01160000351

Dist	COUNTY	LOCATION CODE	POST MILES TOTAL PROJECT	SHEET No.	TOTAL SHEETS
01	HUM	101			77

REGISTERED CIVIL ENGINEER DATE

PLANS APPROVAL DATE

THE STATE OF CALIFORNIA, ITS OFFICERS OR AGENTS SHALL NOT BE RESPONSIBLE FOR THE ACCURACY OR COMPLETENESS OF SCANNED COPIES OF THIS PLAN SHEET.

REGISTERED PROFESSIONAL ENGINEER No. Exp. CIVIL STATE OF CALIFORNIA

PRELIMINARY DESIGN ONLY FOR REVIEW

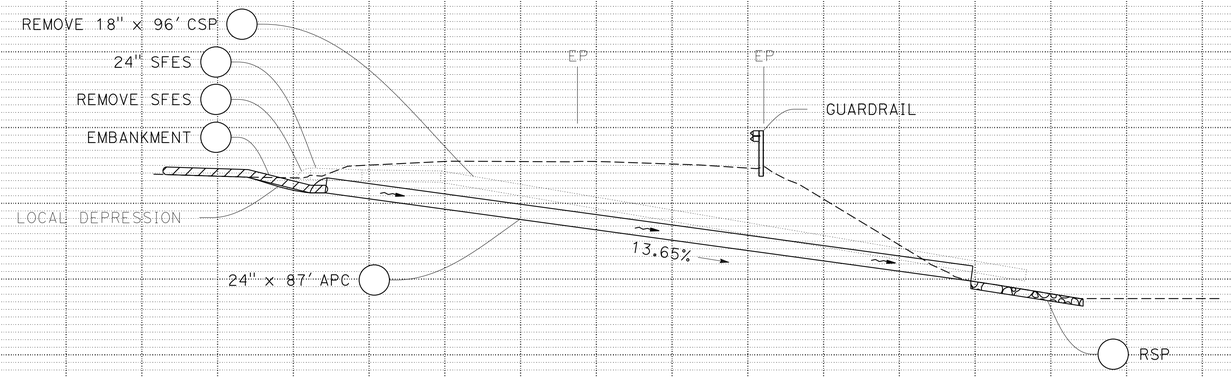

PART B

DRAINAGE SYSTEM No. 29

PM 43.35/ 43.37

DRAINAGE PROFILES

SCALE: 1" = 10'

DP-29

REVISED BY | DATE REVISED

Daniel Anderson

CALCULATED-DESIGNED BY | CHECKED BY

FUNCTIONAL SUPERVISOR

Tony Zalik

STATE OF CALIFORNIA - DEPARTMENT OF TRANSPORTATION

Caltrans

LAST REVISION | DATE PLOTTED => 5-APR-2023 | TIME PLOTTED => 13:26

03-10-23

BORDER LAST REVISED 8/5/2020

USERNAME => s152443
DGN FILE => 01170002451b000_PM 43.37.dgn

RELATIVE BORDER SCALE IS IN INCHES 0 1 2 3

UNIT 0312

PROJECT NUMBER & PHASE 01160000351

Dist	COUNTY	LOCATION CODE	POST MILES TOTAL PROJECT	SHEET No.	TOTAL SHEETS
01	HUM	101			77

REGISTERED CIVIL ENGINEER DATE

PLANS APPROVAL DATE

THE STATE OF CALIFORNIA, ITS OFFICERS OR AGENTS SHALL NOT BE RESPONSIBLE FOR THE ACCURACY OR COMPLETENESS OF SCANNED COPIES OF THIS PLAN SHEET.

REGISTERED PROFESSIONAL ENGINEER No. Exp. CIVIL STATE OF CALIFORNIA

PRELIMINARY DESIGN ONLY FOR REVIEW

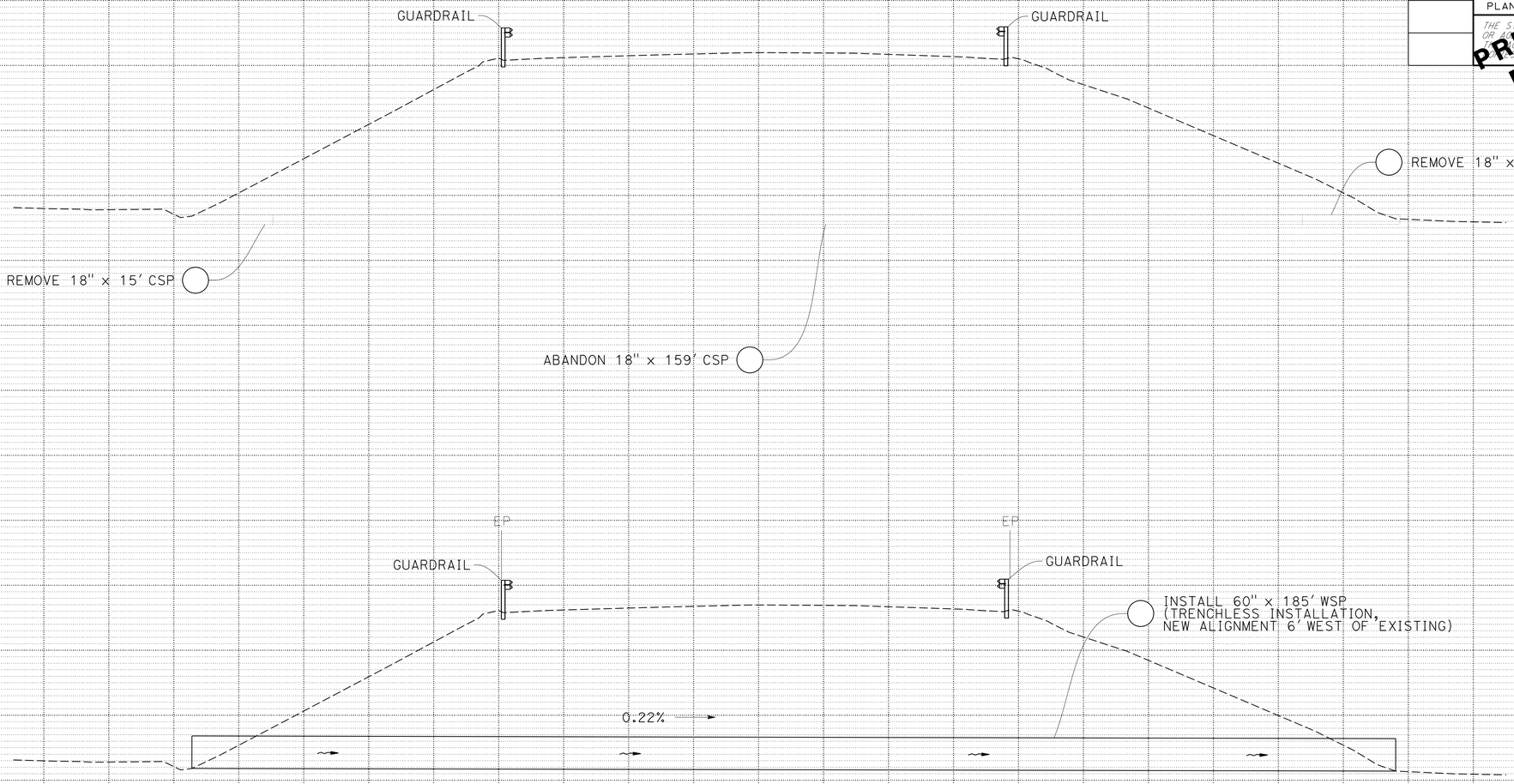

DRAINAGE SYSTEM No. 30

PM 43.54

DRAINAGE PROFILES

SCALE: 1" = 10'

DP-30

REVISED BY | DATE REVISED

CALCULATED-DESIGNED BY: Daniel Anderson

CHECKED BY

FUNCTIONAL SUPERVISOR: Tony Zalik

STATE OF CALIFORNIA - DEPARTMENT OF TRANSPORTATION

Caltrans

LAST REVISION | DATE PLOTTED => 5-APR-2023
03-10-23 | TIME PLOTTED => 13:26

BORDER LAST REVISED 8/5/2020

USERNAME => s152443
DGN FILE => 01170002451b000_PM 43.54.dgn

RELATIVE BORDER SCALE IS IN INCHES 0 1 2 3

UNIT 0312

PROJECT NUMBER & PHASE 01160000351

Dist	COUNTY	LOCATION CODE	POST MILES TOTAL PROJECT	SHEET No.	TOTAL SHEETS
01	HUM	101			77

REGISTERED CIVIL ENGINEER DATE

PLANS APPROVAL DATE

THE STATE OF CALIFORNIA, ITS OFFICERS OR AGENTS SHALL NOT BE RESPONSIBLE FOR THE ACCURACY OR COMPLETENESS OF SCANNED COPIES OF THIS PLAN SHEET.

REGISTERED PROFESSIONAL ENGINEER No. Exp. CIVIL STATE OF CALIFORNIA

PRELIMINARY DESIGN ONLY FOR REVIEW

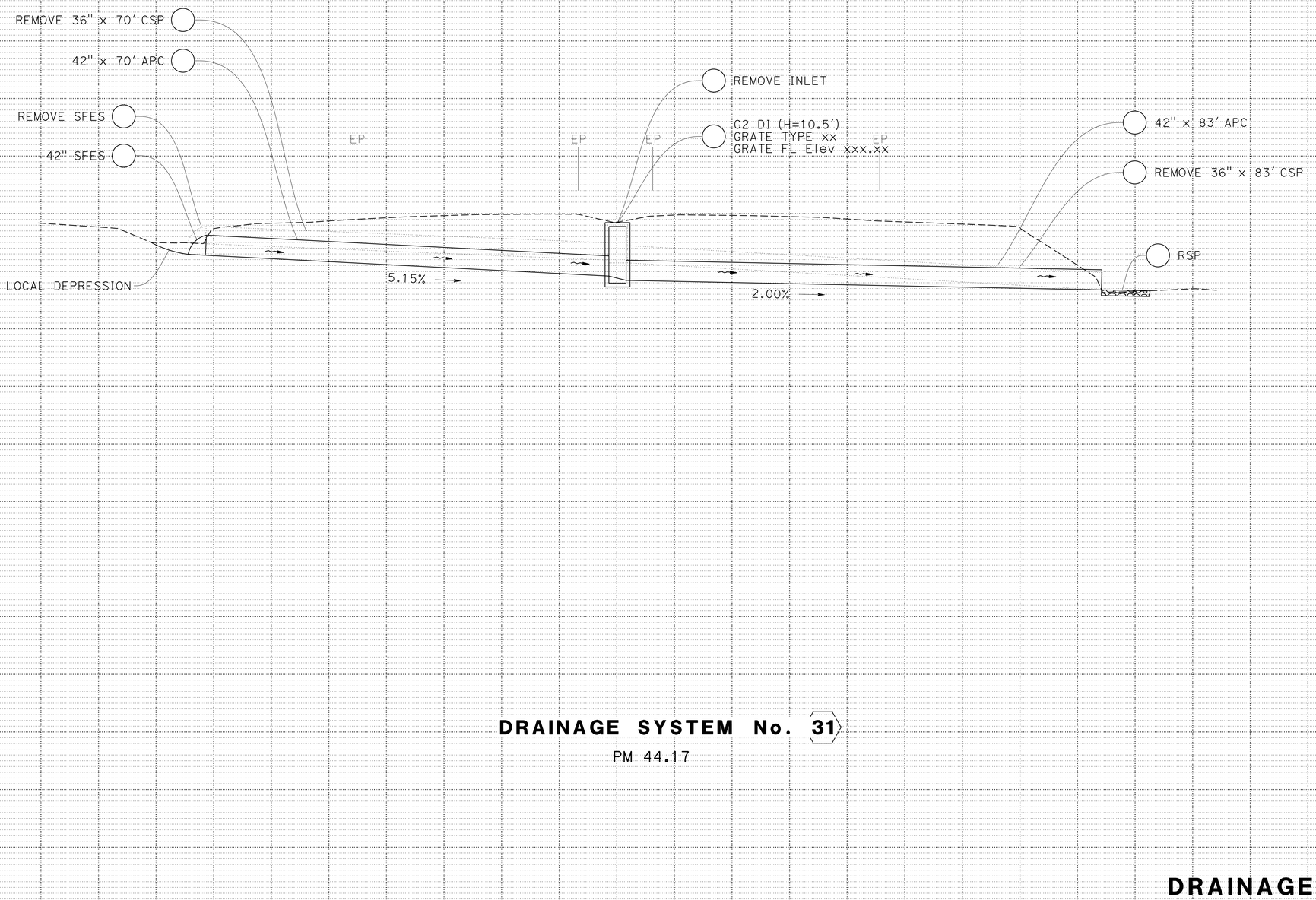

DRAINAGE SYSTEM No. 31

PM 44.17

DRAINAGE PROFILES

SCALE: 1" = 10'

DP-31

REVISED BY | DATE REVISED

CALCULATED-DESIGNED BY: Daniel Anderson

CHECKED BY

FUNCTIONAL SUPERVISOR: Tony Zalik

STATE OF CALIFORNIA - DEPARTMENT OF TRANSPORTATION

Caltrans

LAST REVISION DATE PLOTTED => 5-APR-2023
TIME PLOTTED => 13:26

BORDER LAST REVISED 8/5/2020

USERNAME => s152443
DGN FILE => 01170002451b000_PM 44.17.dgn

RELATIVE BORDER SCALE IS IN INCHES 0 1 2 3

UNIT 0312

PROJECT NUMBER & PHASE 01160000351

Dist	COUNTY	LOCATION CODE	POST MILES TOTAL PROJECT	SHEET No.	TOTAL SHEETS
01	HUM	101			77

REGISTERED CIVIL ENGINEER DATE

PLANS APPROVAL DATE

THE STATE OF CALIFORNIA, ITS OFFICERS OR AGENTS SHALL NOT BE RESPONSIBLE FOR THE ACCURACY OR COMPLETENESS OF SCANNED COPIES OF THIS PLAN SHEET.

PRELIMINARY DESIGN ONLY FOR REVIEW

REGISTERED PROFESSIONAL ENGINEER No. Exp. CIVIL STATE OF CALIFORNIA

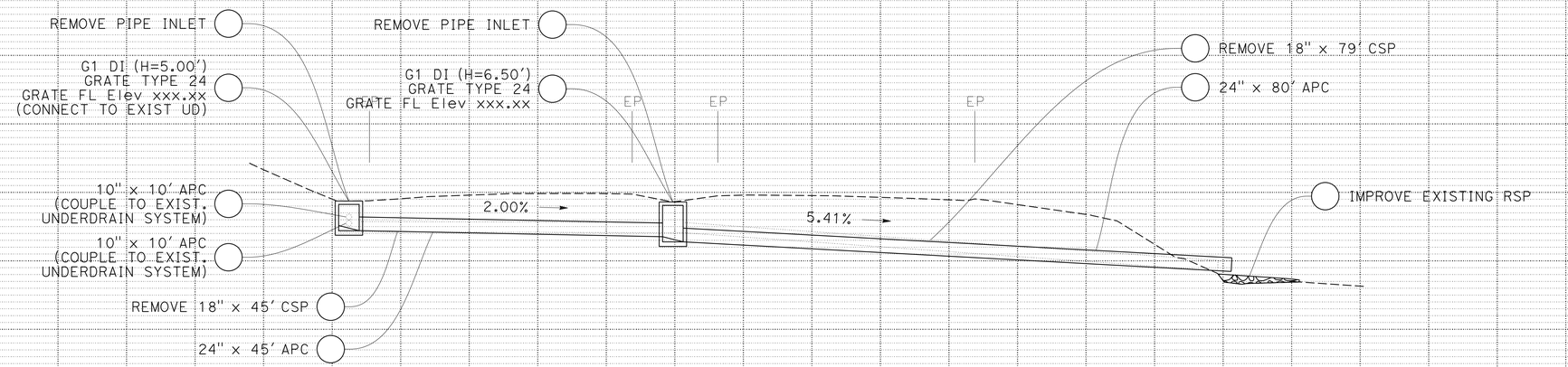

DRAINAGE SYSTEM No. 32

PM 45.25

DRAINAGE PROFILES

SCALE: 1" = 10'

DP-32

REVISED BY | DATE REVISED

Daniel Anderson

CALCULATED-DESIGNED BY | CHECKED BY

FUNCTIONAL SUPERVISOR: Tony Zalik

STATE OF CALIFORNIA - DEPARTMENT OF TRANSPORTATION

Caltrans

LAST REVISION | DATE PLOTTED => 5-APR-2023 | TIME PLOTTED => 13:26

03-10-23

BORDER LAST REVISED 8/5/2020

USERNAME => s152443
DGN FILE => 01170002451b000_PM 45.25.dgn

RELATIVE BORDER SCALE IS IN INCHES 0 1 2 3

UNIT 0312

PROJECT NUMBER & PHASE 01160000351

Dist	COUNTY	LOCATION CODE	POST MILES TOTAL PROJECT	SHEET No.	TOTAL SHEETS
01	HUM	101			77

REGISTERED CIVIL ENGINEER DATE

PLANS APPROVAL DATE

REGISTERED PROFESSIONAL ENGINEER No. Exp. CIVIL STATE OF CALIFORNIA

THE STATE OF CALIFORNIA AND ITS OFFICERS OR AGENTS SHALL NOT BE RESPONSIBLE FOR THE ACCURACY OR COMPLETENESS OF SCANNED COPIES OF THIS PLAN SHEET.

PRELIMINARY DESIGN ONLY FOR REVIEW

60" SFES

REPAIR ERODED AREA AT INLET (RAISE FL. ELEV. 6' APPROX.) CLAY PLUG

REMOVE SFES

REMOVE 54" x 15' CSP

ABANDON 54" x 316' CSP

EP

EP

GUARDRAIL

21.17%

60" x 317' WSP (TRENCHLESS)

G2 DI (H=7.5')
GRATE TYPE xx
GRATE FL Elev xxx.xx

60" x 78' APC

EP

EP

GUARDRAIL

6.42%

IMPROVE AND EXTEND EXISTING RSP

REMOVE 54" x 100' CSP

DRAINAGE SYSTEM No. 33

PM 47.01

DRAINAGE PROFILES

SCALE: 1" = 10'

DP-33

REVISED BY | DATE REVISED

Daniel Anderson

CALCULATED-DESIGNED BY | CHECKED BY

FUNCTIONAL SUPERVISOR

Tony Zalik

STATE OF CALIFORNIA - DEPARTMENT OF TRANSPORTATION

Caltrans

LAST REVISION | DATE PLOTTED => 5-APR-2023
03-10-23 | TIME PLOTTED => 13:26

BORDER LAST REVISED 8/5/2020

USERNAME => s152443
DGN FILE => 01170002451b000_PM 47.01.dgn

RELATIVE BORDER SCALE IS IN INCHES 0 1 2 3

UNIT 0312

PROJECT NUMBER & PHASE 01160000351

Dist	COUNTY	LOCATION CODE	POST MILES TOTAL PROJECT	SHEET No.	TOTAL SHEETS
01	HUM	101			77

REGISTERED CIVIL ENGINEER DATE

PLANS APPROVAL DATE

THE STATE OF CALIFORNIA, ITS OFFICERS OR AGENTS SHALL NOT BE RESPONSIBLE FOR THE ACCURACY OR COMPLETENESS OF SCANNED COPIES OF THIS PLAN SHEET.

REGISTERED PROFESSIONAL ENGINEER No. Exp. CIVIL STATE OF CALIFORNIA

PRELIMINARY DESIGN ONLY FOR REVIEW

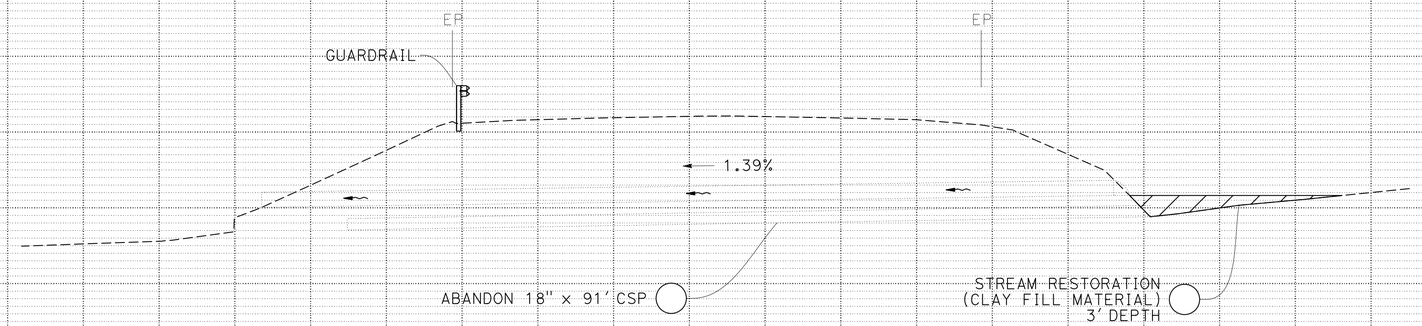

DRAINAGE SYSTEM No. 34

PM 49.86

DRAINAGE PROFILES

SCALE: 1" = 10'

DP-34

REVISED BY | DATE REVISED

Daniel Anderson

CALCULATED-DESIGNED BY

CHECKED BY

FUNCTIONAL SUPERVISOR

Tony Zalik

STATE OF CALIFORNIA - DEPARTMENT OF TRANSPORTATION

Caltrans

LAST REVISION DATE PLOTTED => 5-APR-2023
TIME PLOTTED => 13:26

BORDER LAST REVISED 8/5/2020

USERNAME => s152443
DGN FILE => 0117000245ib000_PM 49.86.dgn

RELATIVE BORDER SCALE IS IN INCHES 0 1 2 3

UNIT 0312

PROJECT NUMBER & PHASE 01160000351

Dist	COUNTY	LOCATION CODE	POST MILES TOTAL PROJECT	SHEET No.	TOTAL SHEETS
01	HUM	101			77

REGISTERED CIVIL ENGINEER DATE

PLANS APPROVAL DATE

THE STATE OF CALIFORNIA, ITS OFFICERS OR AGENTS SHALL NOT BE RESPONSIBLE FOR THE ACCURACY OR COMPLETENESS OF SCANNED IMAGES OF THIS PLAN SHEET.

REGISTERED PROFESSIONAL ENGINEER No. Exp. CIVIL STATE OF CALIFORNIA

PRELIMINARY DESIGN ONLY FOR REVIEW

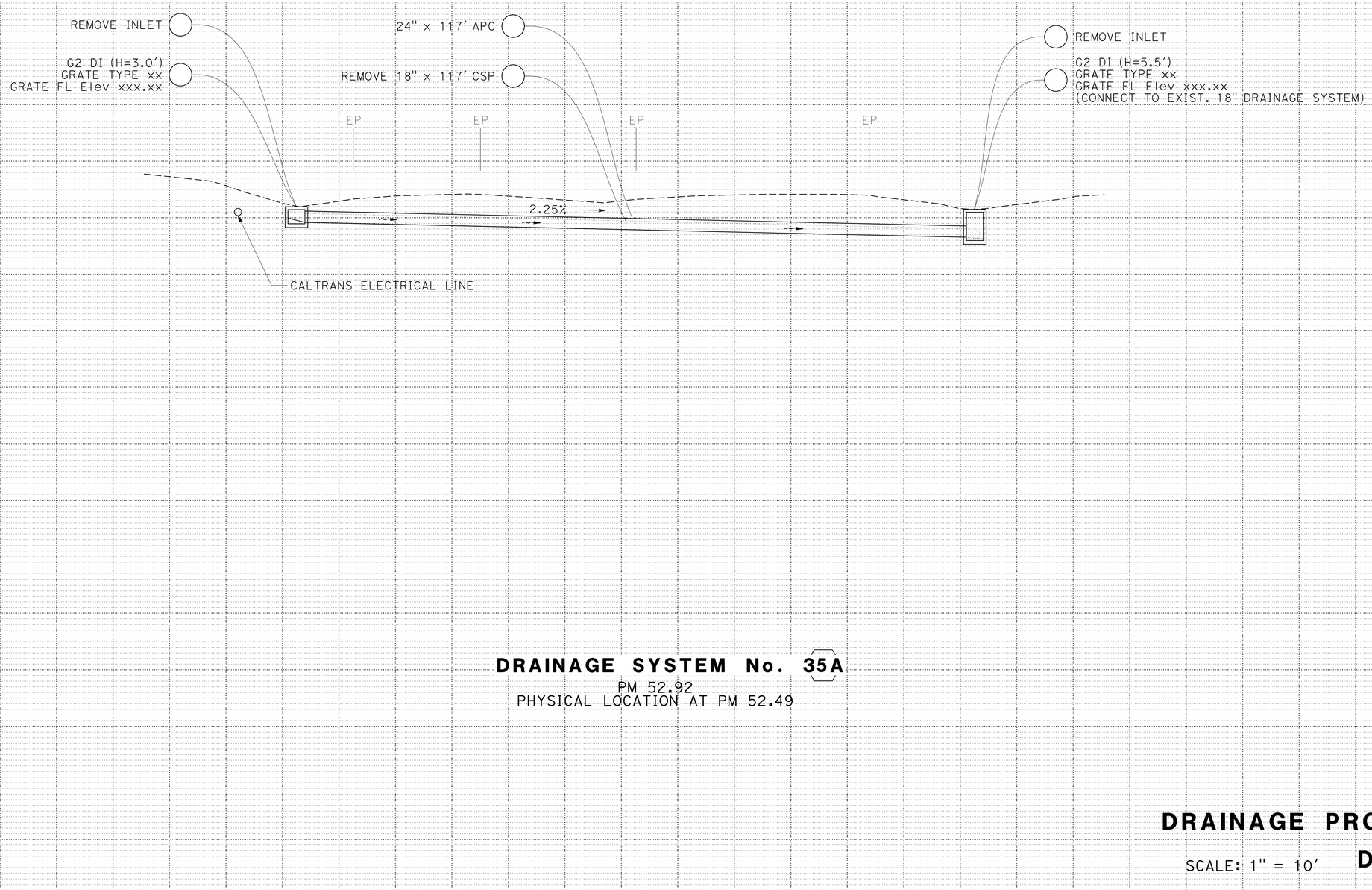

DRAINAGE SYSTEM No. 35A

PM 52.92
PHYSICAL LOCATION AT PM 52.49

DRAINAGE PROFILES

SCALE: 1" = 10' **DP-35A**

STATE OF CALIFORNIA - DEPARTMENT OF TRANSPORTATION
Caltrans

FUNCTIONAL SUPERVISOR: Tony Zalik
CALCULATED-DESIGNED BY:
CHECKED BY:
Daniel Anderson
REVISED BY
DATE REVISED

LAST REVISION DATE PLOTTED => 5-APR-2023
TIME PLOTTED => 13:26
03-10-23

BORDER LAST REVISED 8/5/2020
USERNAME => s152443
DGN FILE => 01170002451b000_PM 52.92A.dgn
RELATIVE BORDER SCALE IS IN INCHES 0 1 2 3
UNIT 0312
PROJECT NUMBER & PHASE 01160000351

Dist	COUNTY	LOCATION CODE	POST MILES TOTAL PROJECT	SHEET No.	TOTAL SHEETS
01	HUM	101			77

REGISTERED CIVIL ENGINEER DATE

PLANS APPROVAL DATE

THE STATE OF CALIFORNIA, ITS OFFICERS OR AGENTS SHALL NOT BE RESPONSIBLE FOR THE ACCURACY OR COMPLETENESS OF SCANNED COPIES OF THIS PLAN SHEET.

REGISTERED PROFESSIONAL ENGINEER No. Exp. CIVIL STATE OF CALIFORNIA

PRELIMINARY DESIGN ONLY FOR REVIEW

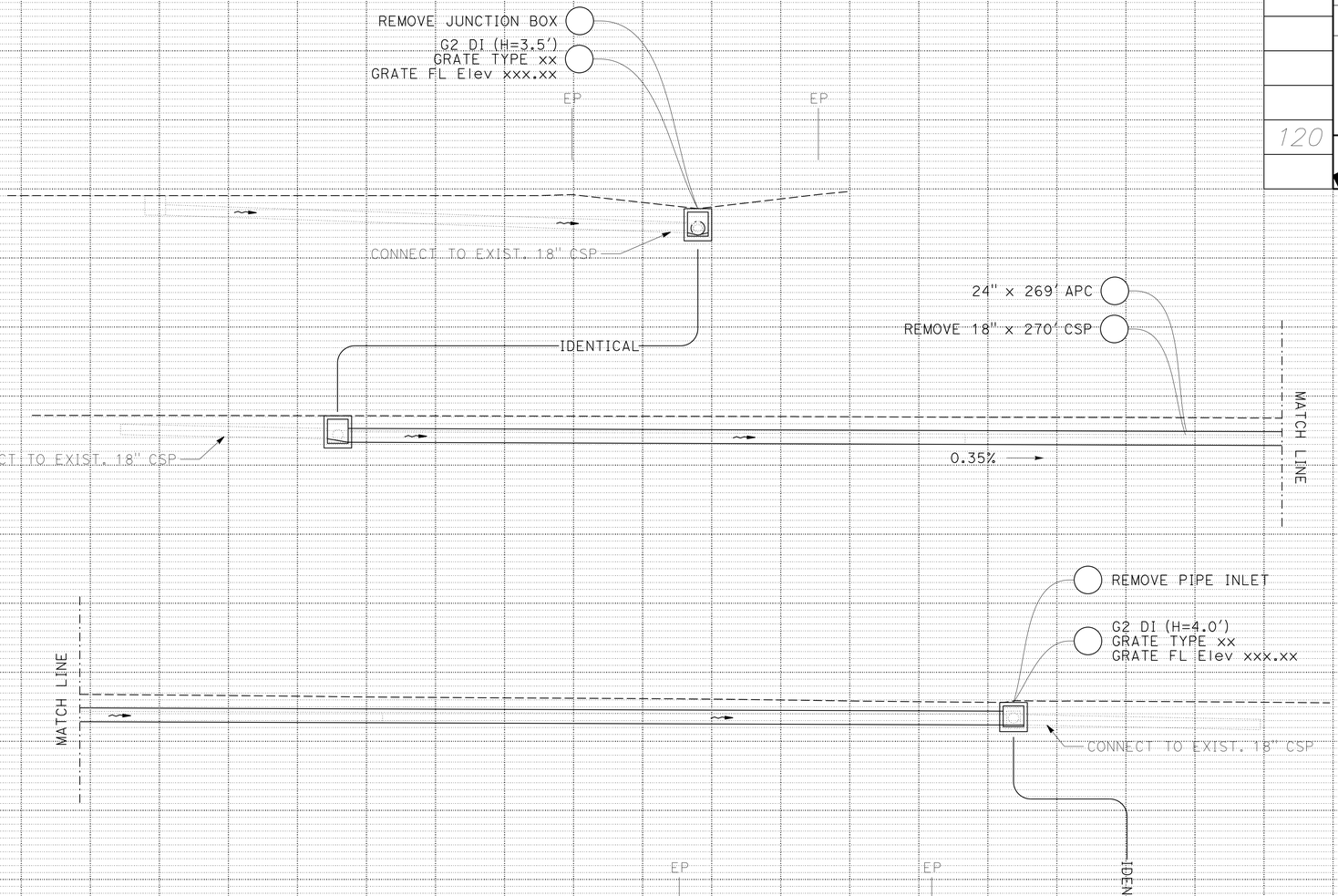

DRAINAGE SYSTEM No. 35B

PM 52.92

DRAINAGE PROFILES

SCALE: 1" = 10'

DP-35B

REVISED BY | DATE REVISED

Daniel Anderson

CALCULATED-DESIGNED BY | CHECKED BY

FUNCTIONAL SUPERVISOR

Tony Zalik

STATE OF CALIFORNIA - DEPARTMENT OF TRANSPORTATION

Caltrans

LAST REVISION | DATE PLOTTED => 5-APR-2023 | TIME PLOTTED => 13:26

03-10-23

BORDER LAST REVISED 8/5/2020

USERNAME => s152443

DGN FILE => 0117000245ib000_PM 52.92B.dgn

RELATIVE BORDER SCALE IS IN INCHES 0 1 2 3

UNIT 0312

PROJECT NUMBER & PHASE 01160000351

Dist	COUNTY	LOCATION CODE	POST MILES TOTAL PROJECT	SHEET No.	TOTAL SHEETS
01	HUM	101			77

REGISTERED CIVIL ENGINEER DATE

PLANS APPROVAL DATE

THE STATE OF CALIFORNIA, ITS OFFICERS OR AGENTS SHALL NOT BE RESPONSIBLE FOR THE ACCURACY OR COMPLETENESS OF SCANNED COPIES OF THIS PLAN SHEET.

REGISTERED PROFESSIONAL ENGINEER No. Exp. CIVIL STATE OF CALIFORNIA

PRELIMINARY DESIGN ONLY FOR REVIEW

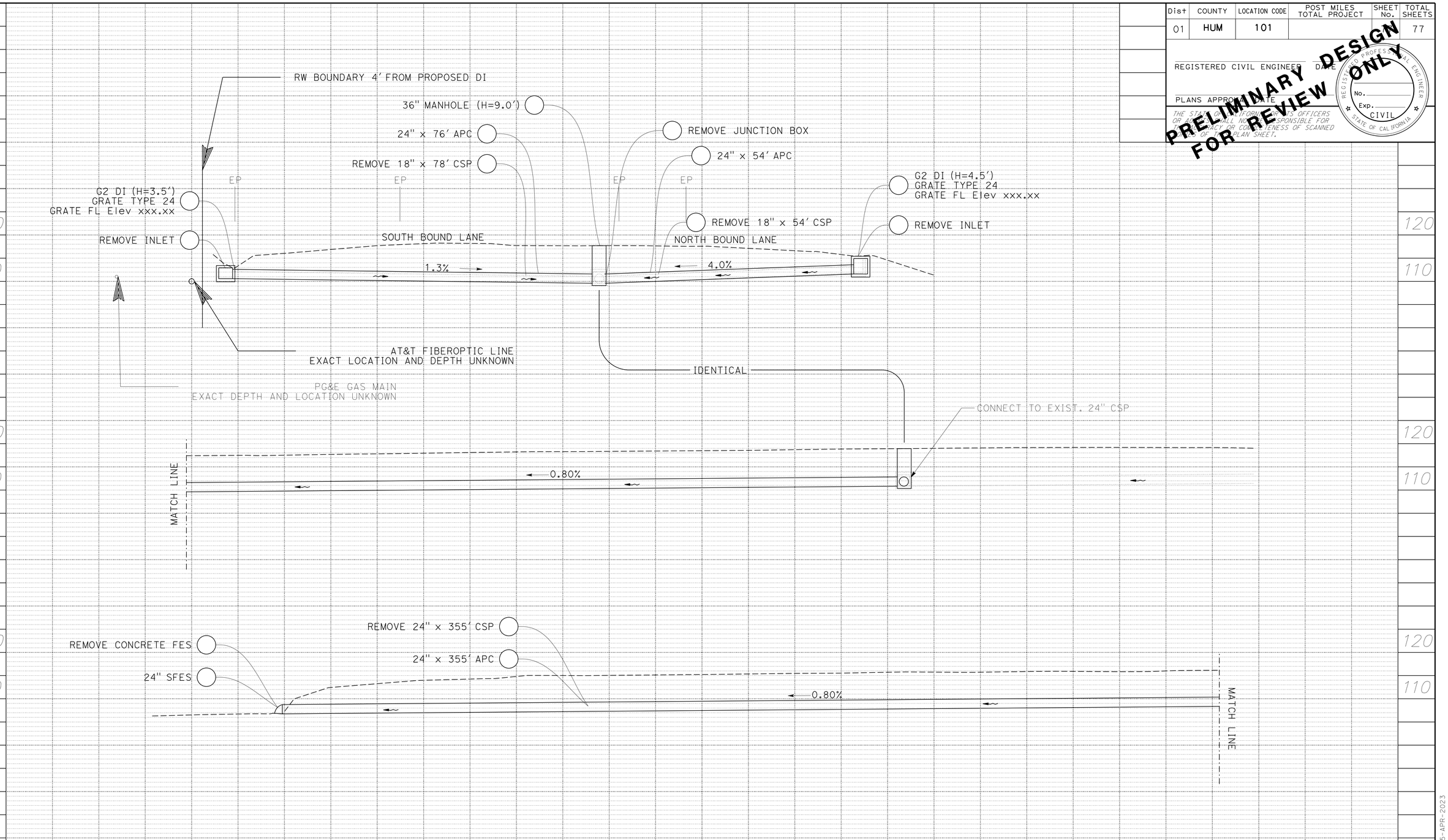

DRAINAGE SYSTEM No. 36

PM 53.85

DRAINAGE PROFILES

SCALE: 1" = 10'

DP-36

REVISED BY | DATE REVISED

CALCULATED-DESIGNED BY: Daniel Anderson

CHECKED BY

FUNCTIONAL SUPERVISOR: Tony Zalik

STATE OF CALIFORNIA - DEPARTMENT OF TRANSPORTATION

Caltrans

LAST REVISION 03-10-23 | DATE PLOTTED => 5-APR-2023 | TIME PLOTTED => 13:26

BORDER LAST REVISED 8/5/2020

USERNAME => s152443
DGN FILE => 0117000245ib000_PM 53.85.dgn

RELATIVE BORDER SCALE IS IN INCHES 0 1 2 3

UNIT 0312

PROJECT NUMBER & PHASE 01160000351

This page left intentionally blank.

Appendix B. Title VI Policy Statement

This page left intentionally blank.

DEPARTMENT OF TRANSPORTATION
OFFICE OF THE DIRECTOR
P.O. BOX 942873, MS-49
SACRAMENTO, CA 94273-0001
PHONE (916) 654-6130
FAX (916) 653-5776
TTY 711
www.dot.ca.gov

Making Conservation a California Way of Life.

September 2021

NON-DISCRIMINATION POLICY STATEMENT

The California Department of Transportation, under Title VI of the Civil Rights Act of 1964, ensures "*No person in the United States shall, on the ground of race, color, or national origin, be excluded from participation in, be denied the benefits of, or be subjected to discrimination under any program or activity receiving federal financial assistance*."

Caltrans will make every effort to ensure nondiscrimination in all of its services, programs and activities, whether they are federally funded or not, and that services and benefits are fairly distributed to all people, regardless of race, color, or national origin. In addition, Caltrans will facilitate meaningful participation in the transportation planning process in a nondiscriminatory manner.

Related federal statutes, remedies, and state law further those protections to include sex, disability, religion, sexual orientation, and age.

For information or guidance on how to file a complaint, or obtain more information regarding Title VI, please contact the Title VI Branch Manager at (916) 324-8379 or visit the following web page: https://dot.ca.gov/programs/civil-rights/title-vi .

To obtain this information in an alternate format such as Braille or in a language other than English, please contact the California Department of Transportation, Office of Civil Rights, at 1823 14th Street, MS-79, Sacramento, CA 95811; PO Box 942874, MS-79, Sacramento, CA 94274-0001; (916) 324-8379 (TTY 711); or at Title.VI@dot.ca.gov.

Toks Omishakin
Director

This page left intentionally blank.

Appendix C. USFWS, NMFS, CNDDB and CNPS Species Lists

This page left intentionally blank.

Special Status Plant Species Potentially Occurring or Known to Occur within the Project Area

Common Name	*Scientific Name*	Status[1] Federal/ State/ CRPR	Habitat Elevational Range (feet)	Habitat Presence	Rationale
VASCULAR PLANTS					
Baker's navarretia	*Navarretia leucocephala* ssp. *bakeri*	--/--/1B.1	Cismontane woodland, meadows and seeps, vernal pools, valley and foothill grassland, lower montane coniferous forest. Vernal pools and swales; adobe or alkaline soils. 9-5,512 feet (3-1,680 meters)	Absent	A survey was conducted within the species' identification period; this species was not observed.
Beach layia	*Layia carnosa*	FE/SE/1B.1	On sparsely vegetated, semi-stabilized dunes, usually behind foredunes in coastal dunes and scrub. 0-99 feet (0-30 meters)	Absent	A survey was conducted within the species' identification period; this species was not observed.
Beaked tracyina	*Tracyina rostrata*	--/--/1B.2	Chaparral, cismontane woodlands, valley and foothill grasslands. 295-4,165 feet (90-1,270 meters)	Absent	A survey was conducted within the species' identification period; this species was not observed.
Bolander's catchfly	*Silene bolanderi*	--/--/1B.2	Chaparral, cismontane woodlands, lower montane coniferous forest, North Coast coniferous forest, meadows and seeps. 1,380-3,775 feet (420-1,150 meters)	Absent	A survey was conducted within the species' identification period; this species was not observed.
Bristle-stalked sedge	*Carex leptalea*	--/--/2B.2	Bogs and fens, meadows and seeps, marshes, and swamps. Mostly known from bogs and wet meadows. 9-4,577 feet (3-1,395 meters)	Present	A survey was conducted within the species' identification period; this species was not observed.

Common Name	*Scientific Name*	Status[1] Federal/ State/ CRPR	Habitat Elevational Range (feet)	Habitat Presence	Rationale
Burke's goldfields	*Lasthenia burkei*	FE/SE/1B.1	Vernal pools, meadows and seeps. Most often in vernal pools and swales. 5–1,902 feet (15-580 meters)	Absent	A survey was conducted within the species' identification period; this species was not observed. The nearest CNDDB occurrence is 60 miles away.
California's lady-slipper	*Cypripedium californicum*	--/--/4.2	In perennial seepages on serpentine substrate and in gravel along creek margins. 100-9,000 feet (30-2,750 meters)	Present	A survey was conducted within the species' identification period; this species was not observed.
California pinefoot	*Pityopus californicus*	--/--/4.2	Broadleafed upland forest, lower montane coniferous forest, North Coast coniferous forest, upper montane coniferous forest. 45-7,300 feet (14-2,225 meters)	Absent	A survey was conducted within the species' identification period; this species was not observed.
Cascade downingia	*Downingia willamettensis*	--/--/2B.2	Cismontane woodland, valley and foothill grasslands, vernal pools. Lake margins. 49-3,642 feet (15-1,110 meters)	Absent	A survey was conducted within the species' identification period; this species was not observed.
Coast checkerbloom	*Sidalcea oregana* ssp. *eximia*	--/--/1B.2	Meadows and seeps, North Coast coniferous forest, lower montane coniferous forest. Near meadows, in gravelly soil. 16–5,922 feet (5–1,805 meters)	Present	A survey was conducted within the species' identification period; this species was not observed.
Coast fawn lily	*Erythronium revolutum*	--/--/2B.2	Bogs and fens, broad-leafed upland forest, North Coast coniferous forest. Mesic sites; streambanks. Below 5,069 feet (1,600 meters)	Present	A survey was conducted within the species' identification period; this species was not observed.

Common Name	*Scientific Name*	Status[1] Federal/ State/ CRPR	Habitat Elevational Range (feet)	Habitat Presence	Rationale
Contra Costa goldfields	*Lasthenia conjugens*	FE/--/1B.1	Wet areas in cismontane woodland, valley and foothill grassland, vernal pools, alkaline playas or saline vernal pools and swales. Below 1,542 feet (470 meters).	Absent	A survey was conducted within the species' identification period; this species was not observed. The nearest CNDDB occurrence is 68 miles from the BSA.
Dark-eyed gilia	*Gilia millefoliata*	--/--/1B.2	Coastal dunes. 3-196 feet (1-60 meters)	Absent	A survey was conducted within the species' identification period; this species was not observed.
Engelmann's lomatium	*Lomatium engelmannii*	--/--/4.3	Gravelly serpentine slopes and ridges in yellow pine and red fir forests. 2,850-9,000 feet (870-2,740 meters)	Absent	A survey was conducted within the species' identification period; this species was not observed.
Giant fawn lily	*Erythronium oregonum*	--/--/2B.2	Cismontane woodland, meadows, and seeps. Openings, sometimes on serpentine; rocky sites. 328–4,709 feet (100–1,435 meters)	Absent	A survey was conducted within the species' identification period; this species was not observed.
Howell's montia	*Montia howellii*	--/--/2B.2	Meadows and seeps, North Coast coniferous forest, vernal pools. Vernally wet sites; often on compacted soil and disturbed areas. 33–3,987 feet (10–1,215 meters)	Present	A survey was conducted within the species' identification period; this species was not observed.
Humboldt Bay owl's-clover	*Castilleja ambigua* var. *humboldtiensis*	--/--/1B.2	Marshes and swamps. In coastal saltmarsh with *Spartina, Distichlis, Salicornia, Jaumea*. 0-65 feet (0-20 meters)	Absent	A survey was conducted within the species' identification period; this species was not observed.
Humboldt County fuchsia	*Epilobium septentrionale*	--/--/4.3	Broadleafed upland forest, north coast coniferous forest. 145-5,905 feet (44-1,800 meters)	Absent	A survey was conducted within the species' identification period; this species was not observed.

Common Name	*Scientific Name*	Status[1] Federal/ State/ CRPR	Habitat Elevational Range (feet)	Habitat Presence	Rationale
Humboldt County milk-vetch	*Astragalus agnicidus*	--/SE/1B.1	Broad-leaved upland forest, North Coast coniferous forest. Disturbed openings in partially timbered forest lands; along ridgelines; south aspects. 377–2,198 feet (115–670 meters)	Absent	A survey was conducted within the species' identification period; this species was not observed.
Kellogg's buckwheat	*Eriogonum kelloggii*	--/SE/1B.2	Lower montane coniferous forest, rocky serpentine. 1,900-4,100 feet (579-1,520 meters)	Absent	A survey was conducted within the species' identification period; this species was not observed.
Kneeland Prairie pennycress	*Noccaea fendleri* ssp. *californica*	FE/--/1B.1	Coastal prairie. Serpentine rock outcrops. 2,493-2,724 feet (760-830 meters)	Absent	A survey was conducted within the species' identification period; this species was not observed. The nearest CNDDB occurrence is over 17 miles away.
Leafy reed grass	*Calamagrostis foliosa*	/SR/4.2	Coastal bluff scrub, North Coast coniferous forest, rocky cliffs and ocean-facing bluffs. 0-4,000 feet (0-1,220 meters)	Absent	A survey was conducted within the species' identification period; this species was not observed.
Leafy-stemmed mitrewort	*Mitellastra caulescens*	-/-/4.2	Broad-leafed upland forest, lower montane coniferous forest, meadows and seeps, North Coast coniferous forest. 15-5,580 feet (5-1,700 meters)	Present	This species was observed at PM 47.01 during a survey that was conducted within the species' identification period.
Lemon-colored fawn lily	*Erythronium citrinum* var. *citrinum*	--/--/4.3	Chaparral, lower montane coniferous forest, ultramafic dry woodlands, shrubby slopes; usually on serpentine. 490-3,700 feet (150-1,130 meters)	Absent	A survey was conducted within the species identification period; this species was not observed.

Common Name	*Scientific Name*	Status[1] Federal/ State/ CRPR	Habitat Elevational Range (feet)	Habitat Presence	Rationale
Maple-leaved checkerbloom	*Sidalcea malachroides*	--/--/4.2	Broad-leafed upland forest, coastal prairie, coastal scrub, North Coast coniferous forest, riparian forest. 0-2,395 feet (0-730 meters)	Present	A survey was conducted within the species' identification period; this species was not observed.
McDonald's rockcress	*Arabis mcdonaldiana*	FE/SE/1B.1	Lower montane coniferous forest, upper montane coniferous forest. 445-5,905 feet (135-1,800 meters).	Absent	A survey was conducted within the species' identification period; this species was not observed. Nearest CNDDB record is 18 miles from the project BSA.
Mendocino Coast paintbrush	*Castilleja mendocinensis*	--/--/1B.2	Sea bluffs or cliffs in coastal bluff scrub or prairie, in coastal bluff scrub, coastal scrub, coastal prairie, closed cone coniferous forest, and coastal dunes. Up to 525 feet (160 meters).	Absent	A survey was conducted within the species' identification period; this species was not observed.
Mendocino gentian	*Gentiana setigera*	--/--/1B.2	Lower montane coniferous forest, meadows and seeps. Ultramafic, wetland. 1,100-3,495 feet (335-1,065 meters)	Absent	A survey was conducted within the species' identification period; this species was not observed.
North Coast semaphore grass	*Pleuropogon hooverianus*	--/ST/1B.1	Mixed evergreen forest, North Coast coniferous forest, freshwater wetlands, wetland-riparian, meadows, vernal-pools. Occurs usually in wetlands, occasionally in non-wetlands. 35–2,200 ft (10–671 m)	Absent	A survey was conducted within the species' identification period; this species was not observed. Nearest CNDDB record is 28 miles from the project BSA.
Northern bugleweed	*Lycopus uniflorus*	--/--/4.3	Bogs and fens, marshes and swamps. 15-6,560 feet (5-2,000 meters)	Present	A survey was conducted within the species' identification period; this species was not observed.

Common Name	*Scientific Name*	Status[1] Federal/ State/ CRPR	Habitat Elevational Range (feet)	Habitat Presence	Rationale
Northern clustered sedge	*Carex arcta*	--/--/2B.2	Bogs and fens in North Coast coniferous forest. 197–4,610 feet (60–1,405 meters)	Absent	A survey was conducted within the species' identification period; this species was not observed.
Oregon Coast paintbrush	*Castilleja litoralis*	--/--/2B.2	Coastal bluff scrub, coastal dunes, coastal scrub. Sandy sites. 16-837 feet (5-255 meters)	Absent	A survey was conducted within the species' identification period; this species was not observed.
Oregon goldthread	*Coptic laciniata*	--/--/4.2	Meadows and seeps, North Coast coniferous forest (streambanks). 0-3,280 feet (0-1,000 meters)	Present	A survey was conducted within the species' identification period; this species was not observed.
Oregon polemonium	*Polemonium carneum*	--/--/2B.2	Coastal prairie, coastal scrub, lower montane coniferous forest. 0-6,004 feet (0-1,830 meters)	Present	A survey was conducted within the species' identification period; this species was not observed.
Oval-leaved viburnum	*Viburnum ellipticum*	--/--/2B.3	Chaparral, cismontane woodland, lower montane coniferous forest. 705-4,595 feet (215-1,400 meters)	Absent	A survey was conducted within the species' identification period; this species was not observed.
Pacific gilia	*Gilia capitata* ssp. *pacifica*	--/--/1B.2	Coastal bluff scrub, chaparral, coastal prairie, valley and foothill grassland. 15–4,413 feet (5–1,345 meters)	Absent	A survey was conducted within the species' identification period; this species was not observed.
Pink sand-verbena	*Abronia umbellata* var. *breviflora*	--/--/1B.1	Coastal dunes and coastal strand. 0-35 feet (0-10 meters)	Absent	A survey was conducted within the species' identification period; this species was not observed.
Point Reyes salty bird's-beak	*Chloropyron maritimum* ssp. *palustre*	--/--/1B.2	Coastal salt marsh. Usually in coastal salt marsh with *Salicornia, Distichlis, Jaumea, Spartina,* etc. 0-378 feet (0-115 meters)	Absent	A survey was conducted within the species' identification period; this species was not observed.

Common Name	*Scientific Name*	Status[1] Federal/ State/ CRPR	Habitat Elevational Range (feet)	Habitat Presence	Rationale
Purple-flowered Washington lily	*Lilium washingtonianum* ssp. *purpurascens*	--/--/4.3	Chaparral, lower montane, coniferous forest, ultramafic, upper montane coniferous forest. Often collected on dry hillsides on serpentine. 230-9,000 feet (70-2,750 meters)	Absent	A survey was conducted within the species' identification period; this species was not observed.
Raiche's manzanita	*Arctostaphylos stanfordiana* ssp. *raichei*	–/–/1B.1	Chaparral, lower montane coniferous forest (openings). 1475-3,395 feet (450-1,035 meters)	Present	A survey was conducted within the species' identification period; this species was not observed.
Rattan's leptosiphon	*Leptosiphon rattanii*	--/--/4.3	Cismontane woodland, lower montane coniferous forest, rocky or gravelly soils. 5,600-6,560 feet (1,700-2,000 meters)	Absent	A survey was conducted within the species' identification period; this species was not observed.
Red Mountain catchfly	*Silene greenei* ssp. *angustifolia*	--/SE/1B.2	Lower montane coniferous forest, chaparral. Rocky dry shallow serpentine soil. 1,395-6,840 feet (425-2,085 meters)	Absent	A survey was conducted within the species' identification period; this species was not observed.
Red Mountain stonecrop	*Sedum eastwoodiae*	--/--/1B.2	Lower montane coniferous forest. 1,970-3,935 feet (600-1,200 meters)	Absent	A survey was conducted within the species' identification period; this species was not observed.
Redwood lily	*Lilium rubescens*	--/--/4.2	Broadleafed upland forest, chaparral, lower montane coniferous forest, North Coast coniferous forest, upper montane coniferous forest. 95-6,265 feet (29-1,910 meters)	Present	A survey was conducted within the species' identification period; this species was not observed.

Common Name	*Scientific Name*	Status[1] Federal/ State/ CRPR	Habitat Elevational Range (feet)	Habitat Presence	Rationale
Running-pine	*Lycopodium clavatum*	--/--/4.1	Lower montane coniferous forest (mesic), marshes and swamps, North Coast coniferous forest (mesic). 145-4,020 feet (44-4,020 meters)	Present	A survey was conducted within the species' identification period; this species was not observed.
Seacoast ragwort	*Packera bolanderi* var. *bolanderi*	--/--/2B.2	Coastal scrub and North Coast coniferous forest, sometimes along roadsides. 98–2,133 feet (30–650 meters)	Absent	A survey was conducted within the species' identification period; this species was not observed.
Seaside bittercress	*Cardamine angulata*	--/--/2B.1	North Coast coniferous forest and lower montane coniferous forest in wet areas and streambanks. 82–3,001 feet (25–915 meters)	Absent	A survey was conducted within the species' identification period; this species was not observed.
Short-leaved evax	*Hesperevax sparsiflora* var. *brevifolia*	--/--/1B.2	Coastal bluff scrub, coastal dunes, and coastal prairie on sandy bluffs and flats. 0–705 feet (0–215 meters)	Absent	A survey was conducted within the species' identification period; this species was not observed.
Showy Indian clover/two-fork clover	*Trifolium amoenum*	FE/–/1B.1	Low elevation grasslands, including swales and disturbed areas, sometimes on serpentinite soils. Coast Range foothills in the San Francisco Bay region. 15-1,350 feet (5–411 meters)	Absent	A survey was conducted within the species' identification period; this species was not observed.
Siskiyou checkerbloom	*Sidalcea malviflora* ssp. *patula*	--/--/1B.2	Coastal bluff scrub, coastal prairie, North Coast coniferous forest. Open coastal forest; roadcuts. 16–4,118 feet (5–1,255 meters)	Present	A survey was conducted within the species' identification period; this species was not observed.
Small groundcone	*Kopsiopsis hookeri*	--/--/2B.3	Open woods and shrubby places, generally with Gaultheria shallon, in North Coast coniferous forest. 295–2,904 feet (90–885 meters)	Absent	A survey was conducted within the species' identification period; this species was not observed.

Common Name	*Scientific Name*	Status[1] Federal/ State/ CRPR	Habitat Elevational Range (feet)	Habitat Presence	Rationale
Tracy's collomia	*Collomia tracyi*	--/--/4.3	Broadleafed upland forest, lower montane coniferous forest. 980-6,890 feet (300-2,100 meters)	Presence	A survey was conducted within the species' identification period; this species was not observed.
Vine Hill ceanothus	*Ceanothus foliosus* var. *vineatus*	--/--/1B.1	Sandy, acidic soil in chaparral. 150-1,000 feet (45-305 meters)	Absent	A survey was conducted within the species' identification period; this species was not observed.
Water howellia	*Howellia aquatilis*	--/--/2B.2	In clear ponds with other aquatics and surrounded by ponderosa pine forest and sometimes riparian associates. 3,560-4,230 feet (1,080-1,375 meters)	Absent	A survey was conducted within the species' identification period; this species was not observed.
Western lily	*Lilium occidentale*	FE/SE/1B.1	Coastal scrub, freshwater marsh, bogs and fens, coastal bluff scrub, coastal prairie, North Coast coniferous forest, marshes, and swamps. Well-drained, old beach washes overlain with wind-blown alluvium and organic topsoil; usually near margins of Sitka spruce. 9-361 feet (3-110 meters)	Present	A survey was conducted within the species' identification period; this species was not observed. The nearest CNDDB occurrence is approximately 12 miles northwest of the BSA.
Western sand-spurrey	*Spergularia canadensis* var. *occidentalis*	--/--/2B.1	Coastal salt marshes and swamps. 0-10 feet (0-3 meters)	Absent	A survey was conducted within the species' identification period; this species was not observed.
White-flowered rein orchid	*Piperia candida*	--/--/1B.2	North Coast coniferous forest, lower montane coniferous forest, broad-leafed upland forest. Sometimes on serpentine. Forest duff, mossy banks, rock outcrops, and muskeg. 66–5,299 feet (20–1,615 meters)	Present	A survey was conducted within the species' identification period; this species was not observed.

Common Name	*Scientific Name*	Status[1] Federal/ State/ CRPR	Habitat Elevational Range (feet)	Habitat Presence	Rationale
Whitney's farewell-to-spring	*Clarkia amoena ssp. whitneyi*	--/--/1B.1	Coastal bluff scrub, coastal scrub. 35-330 feet (10-100 meters)	Absent	A survey was conducted within the species' identification period; this species was not observed.
MOSS and LICHEN					
Methuselah's beard lichen	*Usnea longissima*	--/--/4.2	Grows in the "redwood zone" on tree branches of a variety of trees, including big-leaf maple, oaks, ash, Douglas-fir, and bay. 165-4,790 feet (45-1,465 meters)	Present	A survey was conducted within the species' identification period; this species was not observed.
Minute pocket moss	*Fissidens pauperculus*	--/--/1B.2	North Coast coniferous forest. Moss growing on damp soil along the coast. In dry streambeds and stream banks. 32-3,360 feet (10- 1,024 meters)	Present	A survey was conducted within the species' identification period; this species was not observed.
Three-ranked hump moss	*Meesia triquetra*	--/--/4.2	Bog & fen, meadow & seep, subalpine coniferous forest, upper montane coniferous forest, wetland. 4,250-9,700 (1,300-2,955 meters)	Absent	A survey was conducted within the species' identification period; this species was not observed.

[1] Status:

Federal status: FT = Federal Threatened; FE = Endangered; FCT = Federal Candidate Threatened; FCE = Federal Candidate Endangered

State status: ST = State Threatened; SE = State Endangered; SCE: State Candidate Endangered; FP = Fully Protected; SR = State Rare

CH = Critical Habitat

California Rare Plant Rank (CRPR): 1B = rare, threatened, or endangered in California and elsewhere; 2B = rare, threatened, or endangered in California but more common elsewhere; 3 = more information is needed (Review List); 4 = limited distribution (Watch List)

CRPR Threat Ranking: 0.1 = seriously endangered in California, 0.2 = fairly endangered in California, 0.3 = not very endangered in California.

Special Status Animal Species and Critical Habitat Potentially Occurring or Known to Occur within the Project Area

Common Name	*Scientific Name*	Status[1] Federal/ State	General Habitat Description	Habitat Present/ Absent/ Critical Habitat	Rationale
AMPHIBIANS and REPTILES					
Foothill yellow-legged frog– North Coast clade	*Rana boylii*	--/SSC	Occurs throughout the North and South Coast Ranges, south to the Transverse Range, across northern California to the west slope of the Cascade Range, and south through the foothills of the Sierra Nevada. Inhabits forest streams and rivers (both perennial and intermittent) with sunny, sandy, and rocky banks, with deep pools, and shallow riffles.	Present	Suitable habitat is present within the BSA.
Northern red-legged frog	*Rana aurora*	--/SSC	Occurs in coastal northern California; Mendocino County through Oregon and Washington; humid forests, woodlands, and streams with plant cover. Often found in woods adjacent to streams. Breeding habitat is in permanent water sources; lakes, ponds, reservoirs, slow streams, marshes, bogs, and swamps.	Present	Suitable habitat is present within the BSA.
Pacific tailed frog	*Ascaphus truei*	--/SSC	Occurs in coastal northern California and inland to Big Bend in Shasta County and north in the Cascade Mountains. Restricted to montane cold, clear, rocky perennial streams in wet forests; tadpoles require water below 59 degrees Fahrenheit (F) (15 degrees Celsius [C]).	Present	Suitable habitat is present within the BSA but not within the ESL.

Common Name	*Scientific Name*	Status[1] Federal/ State	General Habitat Description	Habitat Present/ Absent/ Critical Habitat	Rationale
Red-bellied newt	*Taricha rivularis*	--/SSC	Coastal drainages from Humboldt County south to Sonoma County, inland to Lake County. Isolated population of uncertain origin in Santa Clara County.	Present	No suitable breeding habitat within the ESL. Suitable dispersal habitat is present within BSA.
Southern torrent salamander	*Rhyacotriton variegatus*	--/SSC	Found in coastal drainages from southern Mendocino County north to Oregon; prefers cold shaded streams and seeps, often with rocks and talus, usually on north-facing slopes.	Present	Suitable habitat is present adjacent to the project area but does not exist within the BSA.
Western pond turtle	*Emys marmorata*	--/SSC	Occurs throughout California west of the Sierra-Cascade crest; found from sea level to 6,000 feet (1,829 meters); occupies ponds, marshes, rivers, streams, and irrigation canals with muddy or rocky bottoms.	Present	Although not present within the ESL, there is habitat present in the BSA. No suitable nesting habitat is present within the BSA. Detected in Richardson's grove in 2006.
BIRDS					
American peregrine falcon	*Falco peregrinus anatum*	DL/FP	Near wetlands, lakes, rivers, or other water; on cliffs, banks, dunes, mounds; also, human-made structures. Nest consists of a scrape or a depression or ledge in an open site.	Present	Suitable nesting and foraging habitat are present within the BSA.

Common Name	*Scientific Name*	Status[1] Federal/ State	General Habitat Description	Habitat Present/ Absent/ Critical Habitat	Rationale
Bald eagle	*Haliaeetus leucocephalus*	DL/SE/FP	Nests in large, old-growth, or emergent live tree with open branches. Nests typically located 50 to 200 feet (15–61 meters) above ground. Forages primarily in large inland fish-bearing waters with adjacent large trees or snags, and occasionally in uplands with abundant rabbits, other small mammals, or carrion. Breeding range includes the Sierra Nevada, Cascade Range, and portions of the Coast Ranges; winter range expands to include most of the state.	Present	Suitable nesting and foraging habitat are present within the BSA.
Bank swallow	*Riparia riparia*	--/ST	Uncommon breeding season resident in northern and central California; found in valleys and coastal areas where alluvial soils occur; nests colonially in vertical dirt or sand banks, usually along rivers or ponds.	Absent	Suitable habitat is not present within the BSA.
Golden eagle	*Aquila chrysaetos*	--/FP	Rolling foothills, mountain areas, sage-juniper flats, and desert. Cliff-walled canyons provide nesting habitat in most parts of range; also, large trees in open areas.	Absent	Suitable nesting and foraging habitat is not present within the BSA.
Grasshopper sparrow	*Ammodramus savannarum*	--/SSC	Dense grasslands on rolling hills, lowland plains, in valleys and on hillsides on lower mountain slopes. Favors native grasslands with a mix of grasses, forbs, and scattered shrubs. Loosely colonial when nesting.	Absent	Suitable habitat is not present within the BSA or ESL.

Common Name	*Scientific Name*	Status[1] Federal/ State	General Habitat Description	Habitat Present/ Absent/ Critical Habitat	Rationale
Little willow flycatcher	*Empidonax traillii brewsteri*	--/SE	Prefers mountain meadows and riparian habitats. Nests near the edges of vegetation clumps and near streams in mountain meadows and riparian habitats.	Absent	Suitable nesting habitat is not present within the BSA.
Marbled murrelet	*Brachyramphus marmoratus*	FT/SE	Occurs in coastal western United States. A small seabird that nests in California in stands of old-growth redwood and other types of conifer forest.	Present Critical Habitat Present	Critical habitat is present within the ESL. Suitable nesting habitat is not present within the ESL. The BSA does contain mature redwoods and Douglas-fir trees.
Mountain plover	*Charadrius montanus*	--/SSC	Short grasslands, freshly plowed fields, newly sprouting grain fields, and sometimes sod farms. Short vegetation, bare ground, and flat topography. Prefers grazed areas and areas with burrowing rodents.	Absent	Suitable habitat is not present within the BSA.
Northern goshawk	*Accipiter gentilis*	--/SSC (Nesting)	Nests in mature and old-growth forest stands with large trees, high canopy cover, and open understory; forages in mature and old-growth forests with relatively dense canopy, but also enters adjacent open habitats.	Absent	Suitable habitat is not present within the BSA.
Northern spotted owl	*Strix occidentalis caurina*	FT/ST	Old-growth conifer forest with moderate to high canopy closure, a multi-layered and multi-species canopy with large overstory trees. Nests in dense old-growth forest in in tree cavities or on overgrown, broken treetops.	Present Critical Habitat	Suitable nesting and foraging habitat are present within the BSA.

Common Name	*Scientific Name*	Status[1] Federal/ State	General Habitat Description	Habitat Present/ Absent/ Critical Habitat	Rationale
Tricolored blackbird	*Agelaius tricolor*	--/ST, SSC	Highly colonial species, most numerous in Central Valley and vicinity. Largely endemic to California. Requires open water, protected nesting substrate, and foraging area with insect prey near the colony.	Absent	Suitable habitat is not present within the BSA.
Western snowy plover– Pacific Coast DPS	*Charadrius alexandrinus nivosus*	FT/SSC	Nests above the high tide line on coastal beaches, sand spits, dune-backed beaches, sparsely vegetated dunes, beaches at creek and river mouths, and salt pans.	Absent	Suitable habitat is not present within the BSA.
Yellow-billed cuckoo– Western U.S. DPS	*Coccyzus americanus occidentalis*	FT/SE	Nests along the upper Sacramento, lower Feather, south fork of the Kern, Amargosa, Santa Ana, and Colorado rivers. Requires wide, dense riparian forests/woodlands with a thick understory of willows for nesting; sites with a dominant cottonwood overstory are preferred for foraging.	Absent	Suitable habitat is not present within the BSA.

Common Name	*Scientific Name*	Status[1] Federal/ State	General Habitat Description	Habitat Present/ Absent/ Critical Habitat	Rationale
FISH					
Chinook salmon - California Coastal ESU	*Oncorhynchus tshawytscha (pop. 17)*	FT/-	Requires cold, clean water and gravel for spawning and rearing, with cover for velocity and predator refuge. This ESU includes coastal rivers and streams from Redwood creek (Humboldt County) to the Russian River (Sonoma County). This ESU, includes naturally spawned Chinook salmon originating from rivers and streams south of the Klamath River to and including the Russian River.	Present Critical Habitat Present	Although not present in the ESL, there is habitat present in the BSA and some locations are connected to the Eel River and South Fork Eel River.
Coastal cutthroat trout	*Oncorhynchus clarkii clarkii*	--/SSC	Found in small, low-gradient coastal streams that are cool, shaded, with cover. Also found in estuaries. They are anadromous, but strongly associated with fresh water.	Absent	Suitable habitat is not present within the BSA. Project is outside of the coastal cutthroat range.
Coho salmon - Southern Oregon/ Northern California Coast ESU	*Oncorhynchus kisutch (pop. 2)*	FT/ST	Requires cold, clean water and gravel for spawning and rearing, with cover for velocity and predator refuge. This ESU includes coho salmon populations between Punta Gorda, California, and Cape Blanco, Oregon.	Present Critical Habitat Present	Suitable habitat is not present within the ESL; however, is present in the adjacent South Fork Eel River within the BSA.
Eulachon	*Thaleichthys pacificus*	FT/-	Spawns in lower reaches of rivers during peak spring flow events. Adults in the southern DPS are semelparous. Needs sand or coarse gravel for spawning substrate. Larvae are transported to estuaries and then to the ocean.	Absent	Suitable habitat is not present within the BSA.

Common Name	*Scientific Name*	Status[1] Federal/ State	General Habitat Description	Habitat Present/ Absent/ Critical Habitat	Rationale
Green sturgeon–southern DPS	*Acipenser medirostris (pop. 1)*	FT/SSC	The most marine species of sturgeon. Abundance increases northward of Point Conception. Spawns in the Sacramento, Klamath, and Trinity rivers. Spawns at temps between 46-58°F (8-14°C). Preferred spawning substrate is large cobble but can range from clean sand to bedrock.	Absent	Suitable habitat is not present within the BSA.
Longfin smelt	*Spirinchus thaleichthys*	FC/ST	Euryhaline, nektonic and anadromous. Found in open waters of estuaries, mostly in middle or bottom of water column. Prefer salinities of 15-30 parts per thousand (PPT) but can be found in completely fresh water to almost pure sea water.	Absent	Suitable habitat is not present within the BSA.
Pacific lamprey	*Entosphenus tridentatus*	--/SSC	Found in Pacific Coast streams north of San Luis Obispo County. Swift-current gravel-bottomed areas for spawning with water temps between 53-65°F (12-18°C). Ammocoetes need soft sand or mud.	Absent	Suitable habitat is not present within the BSA.
Steelhead trout–Northern California DPS	*Oncorhynchus mykiss irideus (pop. 16)*	FT/-	Found in cool, clear, fast-moving perennial streams with riffles, pools, and dense riparian cover. The Northern California Steelhead DPS includes coastal rivers and streams from Redwood Creek (Humboldt County) to the Gualala River (Sonoma County).	Present Critical Habitat Present	Suitable habitat is not present within the ESL; however, this species is present in the adjacent South Fork Eel River within the BSA.

Common Name	*Scientific Name*	Status[1] Federal/ State	General Habitat Description	Habitat Present/ Absent/ Critical Habitat	Rationale
Summer-run steelhead trout	*Oncorhynchus mykiss irideus (pop. 36)*	--/SCE	Northern California coastal streams south to Middle Fork Eel River. Within range of Klamath Mtns province DPS and Northern California DPS. Cool, swift, shallow water and clean loose gravel for spawning, and suitably large pools in which to spend the summer.	Present Critical Habitat Present	Suitable habitat does not exist within the ESL; however, this species is present in the adjacent Eel River within the BSA.
Tidewater goby	*Eucyclogobius newberryi*	FT/SSC	Brackish water habitats along the California coast from Agua Hedionda Lagoon, San Diego County, to the mouth of the Smith River. Found in shallow lagoons and lower stream reaches, they need fairly still but not stagnant water and high oxygen levels.	Absent	Suitable habitat is not present within the BSA.
Western brook lamprey	*Lampetra richardsoni*	--/SSC	Found in Pacific Coast streams north of San Luis Obispo County, however regular runs in Santa Clara River. Swift-current gravel-bottomed areas for spawning with water temps between 53-65 F (12-18 C). Ammocoetes need soft sand or mud.	Present	Suitable habitat does not exist within the ESL; however, this species is present in the adjacent Eel River within the BSA.

Common Name	*Scientific Name*	Status[1] Federal/ State	General Habitat Description	Habitat Present/ Absent/ Critical Habitat	Rationale
MAMMALS					
Fisher–West Coast DPS	*Pekania pennanti*	--/SSC	Distributed throughout the northern Coast Ranges, Cascade Range, Klamath Range and southern Sierra Nevada. Inhabits forests with diverse successional stages with mostly mid- and late-successional stages and high percent canopy closure. Requires tree or snag cavities for denning, in large-diameter trees.	Present	Suitable habitat is present in the BSA.
Pacific (Humboldt) marten–Coastal DPS	*Martes caurina humboldtensis*	FT/SE	Known from Del Norte and Humboldt counties and adjacent western Siskiyou County. Found in late-successional coniferous forests.	Absent	Although suitable habitat is present within the BSA, this project is outside of the current known range of this species.
Pallid bat	*Antrozous pallidus*	--/SSC	Occurs throughout most of California. Habitat types include grasslands, shrublands, woodlands, and forests from sea level up through mixed conifer forests. Most common in open, dry habitats with rocky areas for roosting.	Present	Suitable habitat is present within the BSA.
Ringtail	*Bassariscus astutus*	FP/--	A mixture of forest and shrubland in close association with rocky areas or riparian habitats. Dens in rock recesses, hollow trees, logs, snags, abandoned burrows, or woodrat nests at low to middle elevations. Usually not found more than 0.6 mile (1 km) from permanent water.	Present	Suitable habitat is present adjacent to the project area; however, does not exist within the ESL.

Common Name	*Scientific Name*	Status[1] Federal/ State	General Habitat Description	Habitat Present/ Absent/ Critical Habitat	Rationale
Sonoma tree vole	*Arborimus pomo*	--/SSC	Endemic to California; from Sonoma County, north through Mendocino, Humboldt, and western Trinity counties to the South Fork of the Smith River, Del Norte County; poorly known; occurs in mixed evergreen forests; may prefer wet and mesic old-growth Douglas-fir forest.	Present	Suitable habitat is present within the BSA.
Townsend's big-eared bat	*Corynorhinus townsendii*	--/SSC	Primarily roost in caves and cave-like roosting habitat, such as tunnels, mines, bridges and hollow trees. In California, occurs in inland deserts, moist cool redwood forests, oak woodlands of the inner Coast Ranges and Sierra Nevada foothills, and low to mid-elevation mixed conifer forests.	Present	Suitable habitat is present within the BSA.
Western red bat	*Lasiurus blossevillii*	--/SSC	Roosts primarily in trees, 2-40 feet (0-13 meters) above ground, from sea level up through mixed conifer forests. Prefers habitat edges and mosaics with trees that are protected from above and open below with open areas for foraging.	Present	Suitable habitat is present within the BSA.

Common Name	*Scientific Name*	Status[1] Federal/ State	General Habitat Description	Habitat Present/ Absent/ Critical Habitat	Rationale
INVERTEBRATES					
Monarch butterfly	*Danaus plexippus*	FCE/--	Overwinters in sites with specific microclimate conditions, including dappled sunlight, high humidity, wind protection, and an absence of freezing temperatures or high winds.	Absent	Suitable habitat is not present within the BSA.
Obscure bumble bee	*Bombus caliginosus*	--/--	Inhabits open grassy coastal prairies and Coast Range meadows. Nesting occurs underground as well as above ground in abandoned bird nests. Food plant genera include *Baccharis, Cirsium, Lupinus, Lotus, Grindelia* and *Phacelia.*	Absent	Suitable habitat is not present within the BSA.
Western bumble bee	*Bombus occidentalis*	--/SCE	Populations of central California, Oregon, Washington, and southern British Columbia have largely disappeared. Generalist foragers using a variety of flower types. Found in a variety of habitat types and forage/pollinate a wide range of plant species. Construct hives in underground burrows or crevices.	Absent	Suitable foraging habitat is present; however, over wintering habitat is not present within the ESL.

[1] **Federal Status**: FE = Endangered; FPT = Proposed Threatened; FT = Threatened; FC = Candidate; DL = Delisted

State Status: SE = Endangered; ST = Threatened; SCT = State Candidate Threatened; SCE = State Candidate Endangered; FP = CDFW Fully Protected; SSC = CDFW Species of Special Concern; SR = State Rare

(*Source: CDFW-CNDDB 2022; USFWS 2022a*)

United States Department of the Interior

FISH AND WILDLIFE SERVICE
Arcata Fish And Wildlife Office
1655 Heindon Road
Arcata, CA 95521-4573
Phone: (707) 822-7201 Fax: (707) 822-8411

In Reply Refer To:
Project Code: 2022-0053069
Project Name: 01-0H640 Humboldt Drainage South

January 11, 2023

Subject: List of threatened and endangered species that may occur in your proposed project location or may be affected by your proposed project

To Whom It May Concern:

The enclosed species list identifies threatened, endangered, proposed and candidate species, as well as proposed and final designated critical habitat, that may occur within the boundary of your proposed project and/or may be affected by your proposed project. The species list fulfills the requirements of the U.S. Fish and Wildlife Service (Service) under section 7(c) of the Endangered Species Act (Act) of 1973, as amended (16 U.S.C. 1531 *et seq.*).

New information based on updated surveys, changes in the abundance and distribution of species, changed habitat conditions, or other factors could change this list. Please feel free to contact us if you need more current information or assistance regarding the potential impacts to federally proposed, listed, and candidate species and federally designated and proposed critical habitat. Please note that under 50 CFR 402.12(e) of the regulations implementing section 7 of the Act, the accuracy of this species list should be verified after 90 days. This verification can be completed formally or informally as desired. The Service recommends that verification be completed by visiting the ECOS-IPaC website at regular intervals during project planning and implementation for updates to species lists and information. An updated list may be requested through the ECOS-IPaC system by completing the same process used to receive the enclosed list.

The purpose of the Act is to provide a means whereby threatened and endangered species and the ecosystems upon which they depend may be conserved. Under sections 7(a)(1) and 7(a)(2) of the Act and its implementing regulations (50 CFR 402 *et seq.*), Federal agencies are required to utilize their authorities to carry out programs for the conservation of threatened and endangered species and to determine whether projects may affect threatened and endangered species and/or designated critical habitat.

A Biological Assessment is required for construction projects (or other undertakings having similar physical impacts) that are major Federal actions significantly affecting the quality of the human environment as defined in the National Environmental Policy Act (42 U.S.C. 4332(2)(c)). For projects other than major construction activities, the Service suggests that a biological

evaluation similar to a Biological Assessment be prepared to determine whether the project may affect listed or proposed species and/or designated or proposed critical habitat. Recommended contents of a Biological Assessment are described at 50 CFR 402.12.

If a Federal agency determines, based on the Biological Assessment or biological evaluation, that listed species and/or designated critical habitat may be affected by the proposed project, the agency is required to consult with the Service pursuant to 50 CFR 402. In addition, the Service recommends that candidate species, proposed species and proposed critical habitat be addressed within the consultation. More information on the regulations and procedures for section 7 consultation, including the role of permit or license applicants, can be found in the "Endangered Species Consultation Handbook" at:

http://www.fws.gov/endangered/esa-library/pdf/TOC-GLOS.PDF

Migratory Birds: In addition to responsibilities to protect threatened and endangered species under the Endangered Species Act (ESA), there are additional responsibilities under the Migratory Bird Treaty Act (MBTA) and the Bald and Golden Eagle Protection Act (BGEPA) to protect native birds from project-related impacts. Any activity, intentional or unintentional, resulting in take of migratory birds, including eagles, is prohibited unless otherwise permitted by the U.S. Fish and Wildlife Service (50 C.F.R. Sec. 10.12 and 16 U.S.C. Sec. 668(a)). For more information regarding these Acts see https://www.fws.gov/birds/policies-and-regulations.php.

The MBTA has no provision for allowing take of migratory birds that may be unintentionally killed or injured by otherwise lawful activities. It is the responsibility of the project proponent to comply with these Acts by identifying potential impacts to migratory birds and eagles within applicable NEPA documents (when there is a federal nexus) or a Bird/Eagle Conservation Plan (when there is no federal nexus). Proponents should implement conservation measures to avoid or minimize the production of project-related stressors or minimize the exposure of birds and their resources to the project-related stressors. For more information on avian stressors and recommended conservation measures see https://www.fws.gov/birds/bird-enthusiasts/threats-to-birds.php.

In addition to MBTA and BGEPA, Executive Order 13186: *Responsibilities of Federal Agencies to Protect Migratory Birds*, obligates all Federal agencies that engage in or authorize activities that might affect migratory birds, to minimize those effects and encourage conservation measures that will improve bird populations. Executive Order 13186 provides for the protection of both migratory birds and migratory bird habitat. For information regarding the implementation of Executive Order 13186, please visit https://www.fws.gov/birds/policies-and-regulations/executive-orders/e0-13186.php.

We appreciate your concern for threatened and endangered species. The Service encourages Federal agencies to include conservation of threatened and endangered species into their project planning to further the purposes of the Act. Please include the Consultation Code in the header of this letter with any request for consultation or correspondence about your project that you submit to our office.

Attachment(s):

- Official Species List
- USFWS National Wildlife Refuges and Fish Hatcheries
- Migratory Birds
- Wetlands

Official Species List

This list is provided pursuant to Section 7 of the Endangered Species Act, and fulfills the requirement for Federal agencies to "request of the Secretary of the Interior information whether any species which is listed or proposed to be listed may be present in the area of a proposed action".

This species list is provided by:

Arcata Fish And Wildlife Office
1655 Heindon Road
Arcata, CA 95521-4573
(707) 822-7201

Project Summary

Project Code: 2022-0053069
Project Name: 01-0H640 Humboldt Drainage South
Project Type: Road/Hwy - Maintenance/Modification
Project Description: The project proposes to rehabilitate culvert drainage systems on US 101 in Humboldt County from PM T0 0.88 to M 53.85. Drainage systems would be rehabilitated through the replacement of culverts with cut and cover replacement or utilizing trenchless methods. Proposed work includes replacement of culverts, downdrains (DD), drainage inlets (DI), headwalls, endwalls, and retaining walls, and installation of rock slope protection (RSP) and rock-lined ditch (RLD). Several existing culverts under 24” diameter would be upsized to 24” diameter.

Project Location:

Approximate location of the project can be viewed in Google Maps: https://www.google.com/maps/@40.2550808,-123.83490229401929,14z

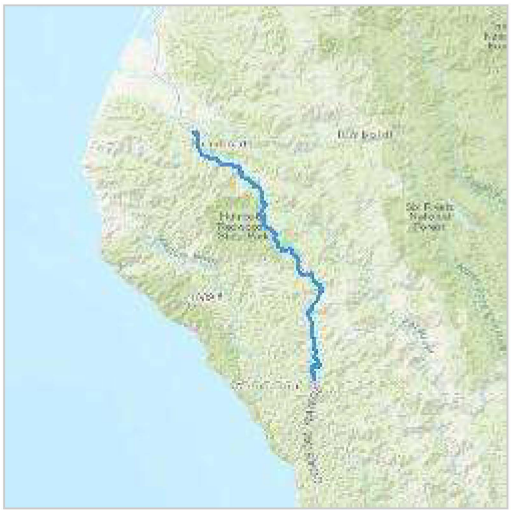

Counties: Humboldt and Mendocino counties, California

Endangered Species Act Species

There is a total of 10 threatened, endangered, or candidate species on this species list.

Species on this list should be considered in an effects analysis for your project and could include species that exist in another geographic area. For example, certain fish may appear on the species list because a project could affect downstream species.

IPaC does not display listed species or critical habitats under the sole jurisdiction of NOAA Fisheries[1], as USFWS does not have the authority to speak on behalf of NOAA and the Department of Commerce.

See the "Critical habitats" section below for those critical habitats that lie wholly or partially within your project area under this office's jurisdiction. Please contact the designated FWS office if you have questions.

---

1. NOAA Fisheries, also known as the National Marine Fisheries Service (NMFS), is an office of the National Oceanic and Atmospheric Administration within the Department of Commerce.

Mammals

NAME	STATUS
Pacific Marten, Coastal Distinct Population Segment *Martes caurina* There is **proposed** critical habitat for this species. Your location does not overlap the critical habitat. Species profile: https://ecos.fws.gov/ecp/species/9081	Threatened

Birds

NAME	STATUS
Marbled Murrelet *Brachyramphus marmoratus* Population: U.S.A. (CA, OR, WA) There is **final** critical habitat for this species. Your location overlaps the critical habitat. Species profile: https://ecos.fws.gov/ecp/species/4467	Threatened
Northern Spotted Owl *Strix occidentalis caurina* There is **final** critical habitat for this species. Your location does not overlap the critical habitat. Species profile: https://ecos.fws.gov/ecp/species/1123	Threatened
Western Snowy Plover *Charadrius nivosus nivosus* Population: Pacific Coast population DPS-U.S.A. (CA, OR, WA), Mexico (within 50 miles of Pacific coast) There is **final** critical habitat for this species. Your location does not overlap the critical habitat. Species profile: https://ecos.fws.gov/ecp/species/8035	Threatened
Yellow-billed Cuckoo *Coccyzus americanus* Population: Western U.S. DPS There is **final** critical habitat for this species. Your location does not overlap the critical habitat. Species profile: https://ecos.fws.gov/ecp/species/3911	Threatened

Insects

NAME	STATUS
Monarch Butterfly *Danaus plexippus* No critical habitat has been designated for this species. Species profile: https://ecos.fws.gov/ecp/species/9743	Candidate

Flowering Plants

NAME	STATUS
Burke's Goldfields *Lasthenia burkei* No critical habitat has been designated for this species. Species profile: https://ecos.fws.gov/ecp/species/4338	Endangered
Contra Costa Goldfields *Lasthenia conjugens* There is **final** critical habitat for this species. Your location does not overlap the critical habitat. Species profile: https://ecos.fws.gov/ecp/species/7058	Endangered
Showy Indian Clover *Trifolium amoenum* No critical habitat has been designated for this species. Species profile: https://ecos.fws.gov/ecp/species/6459	Endangered
Western Lily *Lilium occidentale* No critical habitat has been designated for this species. Species profile: https://ecos.fws.gov/ecp/species/998	Endangered

Critical habitats

There is 1 critical habitat wholly or partially within your project area under this office's jurisdiction.

NAME	STATUS
Marbled Murrelet *Brachyramphus marmoratus* https://ecos.fws.gov/ecp/species/4467#crithab	Final

USFWS National Wildlife Refuge Lands And Fish Hatcheries

Any activity proposed on lands managed by the National Wildlife Refuge system must undergo a 'Compatibility Determination' conducted by the Refuge. Please contact the individual Refuges to discuss any questions or concerns.

THERE ARE NO REFUGE LANDS OR FISH HATCHERIES WITHIN YOUR PROJECT AREA.

Migratory Birds

Certain birds are protected under the Migratory Bird Treaty Act[1] and the Bald and Golden Eagle Protection Act[2].

Any person or organization who plans or conducts activities that may result in impacts to migratory birds, eagles, and their habitats should follow appropriate regulations and consider implementing appropriate conservation measures, as described below.

---

1. The Migratory Birds Treaty Act of 1918.
2. The Bald and Golden Eagle Protection Act of 1940.
3. 50 C.F.R. Sec. 10.12 and 16 U.S.C. Sec. 668(a)

The birds listed below are birds of particular concern either because they occur on the USFWS Birds of Conservation Concern (BCC) list or warrant special attention in your project location. To learn more about the levels of concern for birds on your list and how this list is generated, see the FAQ below. This is not a list of every bird you may find in this location, nor a guarantee that every bird on this list will be found in your project area. To see exact locations of where birders and the general public have sighted birds in and around your project area, visit the E-bird data mapping tool (Tip: enter your location, desired date range and a species on your list). For projects that occur off the Atlantic Coast, additional maps and models detailing the relative occurrence and abundance of bird species on your list are available. Links to additional information about Atlantic Coast birds, and other important information about your migratory bird list, including how to properly interpret and use your migratory bird report, can be found below.

For guidance on when to schedule activities or implement avoidance and minimization measures to reduce impacts to migratory birds on your list, click on the PROBABILITY OF PRESENCE SUMMARY at the top of your list to see when these birds are most likely to be present and breeding in your project area.

NAME	BREEDING SEASON
Allen's Hummingbird *Selasphorus sasin* This is a Bird of Conservation Concern (BCC) throughout its range in the continental USA and Alaska. https://ecos.fws.gov/ecp/species/9637	Breeds Feb 1 to Jul 15
Bald Eagle *Haliaeetus leucocephalus* This is not a Bird of Conservation Concern (BCC) in this area, but warrants attention because of the Eagle Act or for potential susceptibilities in offshore areas from certain types of development or activities.	Breeds Jan 1 to Sep 30

NAME	BREEDING SEASON
Black Oystercatcher *Haematopus bachmani* This is a Bird of Conservation Concern (BCC) throughout its range in the continental USA and Alaska. https://ecos.fws.gov/ecp/species/9591	Breeds Apr 15 to Oct 31
California Gull *Larus californicus* This is a Bird of Conservation Concern (BCC) throughout its range in the continental USA and Alaska.	Breeds Mar 1 to Jul 31
Evening Grosbeak *Coccothraustes vespertinus* This is a Bird of Conservation Concern (BCC) throughout its range in the continental USA and Alaska.	Breeds May 15 to Aug 10
Golden Eagle *Aquila chrysaetos* This is not a Bird of Conservation Concern (BCC) in this area, but warrants attention because of the Eagle Act or for potential susceptibilities in offshore areas from certain types of development or activities. https://ecos.fws.gov/ecp/species/1680	Breeds Jan 1 to Aug 31
Marbled Godwit *Limosa fedoa* This is a Bird of Conservation Concern (BCC) throughout its range in the continental USA and Alaska. https://ecos.fws.gov/ecp/species/9481	Breeds elsewhere
Oak Titmouse *Baeolophus inornatus* This is a Bird of Conservation Concern (BCC) throughout its range in the continental USA and Alaska. https://ecos.fws.gov/ecp/species/9656	Breeds Mar 15 to Jul 15
Olive-sided Flycatcher *Contopus cooperi* This is a Bird of Conservation Concern (BCC) throughout its range in the continental USA and Alaska. https://ecos.fws.gov/ecp/species/3914	Breeds May 20 to Aug 31
Rufous Hummingbird *selasphorus rufus* This is a Bird of Conservation Concern (BCC) throughout its range in the continental USA and Alaska. https://ecos.fws.gov/ecp/species/8002	Breeds Apr 15 to Jul 15
Western Grebe *aechmophorus occidentalis* This is a Bird of Conservation Concern (BCC) throughout its range in the continental USA and Alaska. https://ecos.fws.gov/ecp/species/6743	Breeds Jun 1 to Aug 31
Wrentit *Chamaea fasciata* This is a Bird of Conservation Concern (BCC) throughout its range in the continental USA and Alaska.	Breeds Mar 15 to Aug 10

Probability Of Presence Summary

The graphs below provide our best understanding of when birds of concern are most likely to be present in your project area. This information can be used to tailor and schedule your project activities to avoid or minimize impacts to birds. Please make sure you read and understand the FAQ "Proper Interpretation and Use of Your Migratory Bird Report" before using or attempting to interpret this report.

Probability of Presence (■)

Each green bar represents the bird's relative probability of presence in the 10km grid cell(s) your project overlaps during a particular week of the year. (A year is represented as 12 4-week months.) A taller bar indicates a higher probability of species presence. The survey effort (see below) can be used to establish a level of confidence in the presence score. One can have higher confidence in the presence score if the corresponding survey effort is also high.

How is the probability of presence score calculated? The calculation is done in three steps:

1. The probability of presence for each week is calculated as the number of survey events in the week where the species was detected divided by the total number of survey events for that week. For example, if in week 12 there were 20 survey events and the Spotted Towhee was found in 5 of them, the probability of presence of the Spotted Towhee in week 12 is 0.25.
2. To properly present the pattern of presence across the year, the relative probability of presence is calculated. This is the probability of presence divided by the maximum probability of presence across all weeks. For example, imagine the probability of presence in week 20 for the Spotted Towhee is 0.05, and that the probability of presence at week 12 (0.25) is the maximum of any week of the year. The relative probability of presence on week 12 is 0.25/0.25 = 1; at week 20 it is 0.05/0.25 = 0.2.
3. The relative probability of presence calculated in the previous step undergoes a statistical conversion so that all possible values fall between 0 and 10, inclusive. This is the probability of presence score.

Breeding Season (■)
Yellow bars denote a very liberal estimate of the time-frame inside which the bird breeds across its entire range. If there are no yellow bars shown for a bird, it does not breed in your project area.

Survey Effort (|)
Vertical black lines superimposed on probability of presence bars indicate the number of surveys performed for that species in the 10km grid cell(s) your project area overlaps. The number of surveys is expressed as a range, for example, 33 to 64 surveys.

No Data (–)
A week is marked as having no data if there were no survey events for that week.

Survey Timeframe

Surveys from only the last 10 years are used in order to ensure delivery of currently relevant information. The exception to this is areas off the Atlantic coast, where bird returns are based on all years of available data, since data in these areas is currently much more sparse.

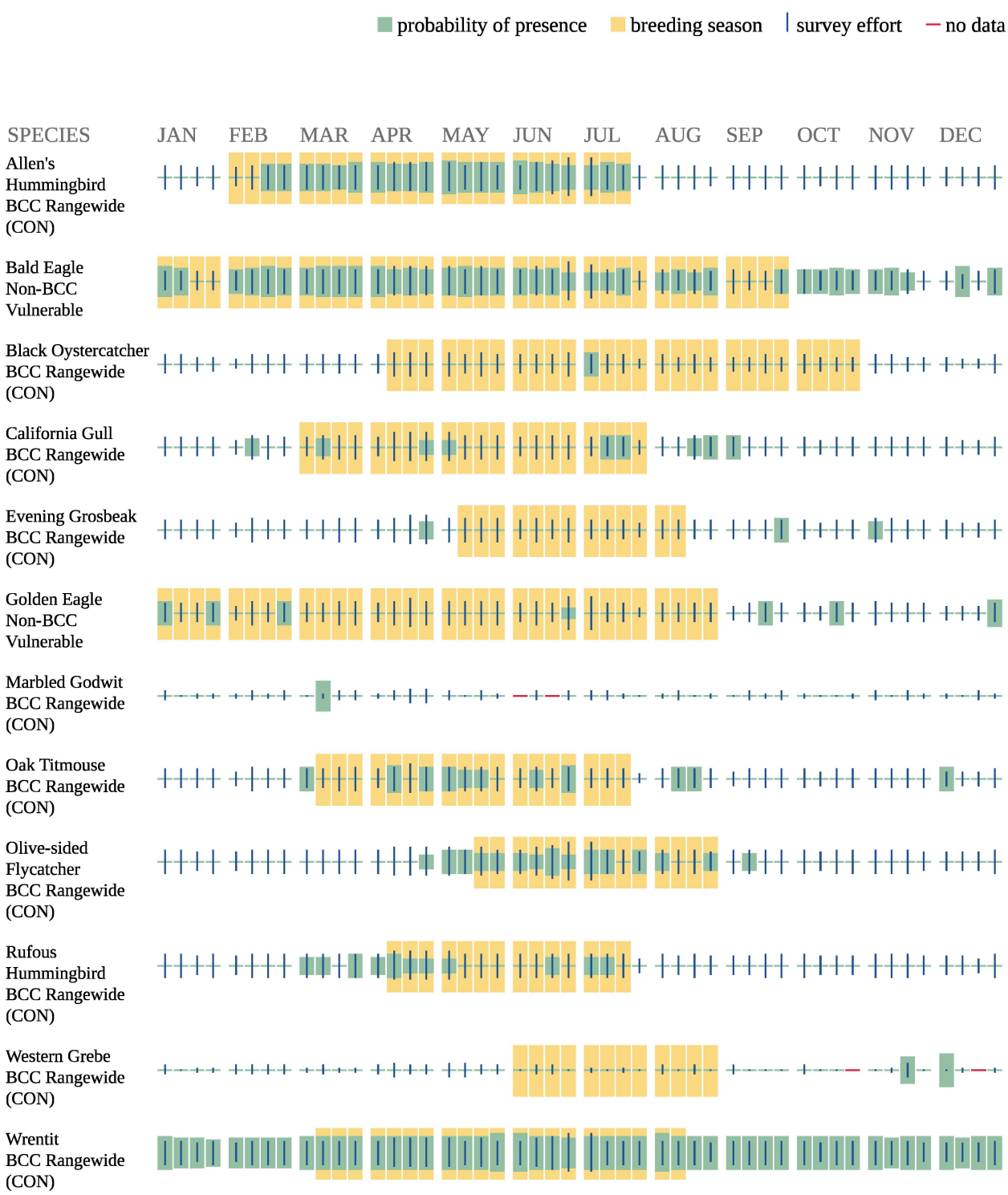

Additional information can be found using the following links:

- Birds of Conservation Concern https://www.fws.gov/program/migratory-birds/species
- Measures for avoiding and minimizing impacts to birds https://www.fws.gov/library/collections/avoiding-and-minimizing-incidental-take-migratory-birds
- Nationwide conservation measures for birds https://www.fws.gov/sites/default/files/documents/nationwide-standard-conservation-measures.pdf

Migratory Birds FAQ

Tell me more about conservation measures I can implement to avoid or minimize impacts to migratory birds.

Nationwide Conservation Measures describes measures that can help avoid and minimize impacts to all birds at any location year round. Implementation of these measures is particularly important when birds are most likely to occur in the project area. When birds may be breeding in the area, identifying the locations of any active nests and avoiding their destruction is a very helpful impact minimization measure. To see when birds are most likely to occur and be breeding in your project area, view the Probability of Presence Summary. Additional measures or permits may be advisable depending on the type of activity you are conducting and the type of infrastructure or bird species present on your project site.

What does IPaC use to generate the list of migratory birds that potentially occur in my specified location?

The Migratory Bird Resource List is comprised of USFWS Birds of Conservation Concern (BCC) and other species that may warrant special attention in your project location.

The migratory bird list generated for your project is derived from data provided by the Avian Knowledge Network (AKN). The AKN data is based on a growing collection of survey, banding, and citizen science datasets and is queried and filtered to return a list of those birds reported as occurring in the 10km grid cell(s) which your project intersects, and that have been identified as warranting special attention because they are a BCC species in that area, an eagle (Eagle Act requirements may apply), or a species that has a particular vulnerability to offshore activities or development.

Again, the Migratory Bird Resource list includes only a subset of birds that may occur in your project area. It is not representative of all birds that may occur in your project area. To get a list of all birds potentially present in your project area, please visit the Rapid Avian Information Locator (RAIL) Tool.

What does IPaC use to generate the probability of presence graphs for the migratory birds potentially occurring in my specified location?

The probability of presence graphs associated with your migratory bird list are based on data provided by the Avian Knowledge Network (AKN). This data is derived from a growing collection of survey, banding, and citizen science datasets.

Probability of presence data is continuously being updated as new and better information becomes available. To learn more about how the probability of presence graphs are produced and

how to interpret them, go the Probability of Presence Summary and then click on the "Tell me about these graphs" link.

How do I know if a bird is breeding, wintering or migrating in my area?
To see what part of a particular bird's range your project area falls within (i.e. breeding, wintering, migrating or year-round), you may query your location using the RAIL Tool and look at the range maps provided for birds in your area at the bottom of the profiles provided for each bird in your results. If a bird on your migratory bird species list has a breeding season associated with it, if that bird does occur in your project area, there may be nests present at some point within the timeframe specified. If "Breeds elsewhere" is indicated, then the bird likely does not breed in your project area.

What are the levels of concern for migratory birds?
Migratory birds delivered through IPaC fall into the following distinct categories of concern:

1. "BCC Rangewide" birds are Birds of Conservation Concern (BCC) that are of concern throughout their range anywhere within the USA (including Hawaii, the Pacific Islands, Puerto Rico, and the Virgin Islands);
2. "BCC - BCR" birds are BCCs that are of concern only in particular Bird Conservation Regions (BCRs) in the continental USA; and
3. "Non-BCC - Vulnerable" birds are not BCC species in your project area, but appear on your list either because of the Eagle Act requirements (for eagles) or (for non-eagles) potential susceptibilities in offshore areas from certain types of development or activities (e.g. offshore energy development or longline fishing).

Although it is important to try to avoid and minimize impacts to all birds, efforts should be made, in particular, to avoid and minimize impacts to the birds on this list, especially eagles and BCC species of rangewide concern. For more information on conservation measures you can implement to help avoid and minimize migratory bird impacts and requirements for eagles, please see the FAQs for these topics.

Details about birds that are potentially affected by offshore projects
For additional details about the relative occurrence and abundance of both individual bird species and groups of bird species within your project area off the Atlantic Coast, please visit the Northeast Ocean Data Portal. The Portal also offers data and information about other taxa besides birds that may be helpful to you in your project review. Alternately, you may download the bird model results files underlying the portal maps through the NOAA NCCOS Integrative Statistical Modeling and Predictive Mapping of Marine Bird Distributions and Abundance on the Atlantic Outer Continental Shelf project webpage.

Bird tracking data can also provide additional details about occurrence and habitat use throughout the year, including migration. Models relying on survey data may not include this information. For additional information on marine bird tracking data, see the Diving Bird Study and the nanotag studies or contact Caleb Spiegel or Pam Loring.

What if I have eagles on my list?
If your project has the potential to disturb or kill eagles, you may need to obtain a permit to avoid violating the Eagle Act should such impacts occur.

Proper Interpretation and Use of Your Migratory Bird Report

The migratory bird list generated is not a list of all birds in your project area, only a subset of birds of priority concern. To learn more about how your list is generated, and see options for identifying what other birds may be in your project area, please see the FAQ "What does IPaC use to generate the migratory birds potentially occurring in my specified location". Please be aware this report provides the "probability of presence" of birds within the 10 km grid cell(s) that overlap your project; not your exact project footprint. On the graphs provided, please also look carefully at the survey effort (indicated by the black vertical bar) and for the existence of the "no data" indicator (a red horizontal bar). A high survey effort is the key component. If the survey effort is high, then the probability of presence score can be viewed as more dependable. In contrast, a low survey effort bar or no data bar means a lack of data and, therefore, a lack of certainty about presence of the species. This list is not perfect; it is simply a starting point for identifying what birds of concern have the potential to be in your project area, when they might be there, and if they might be breeding (which means nests might be present). The list helps you know what to look for to confirm presence, and helps guide you in knowing when to implement conservation measures to avoid or minimize potential impacts from your project activities, should presence be confirmed. To learn more about conservation measures, visit the FAQ "Tell me about conservation measures I can implement to avoid or minimize impacts to migratory birds" at the bottom of your migratory bird trust resources page.

Wetlands

Impacts to NWI wetlands and other aquatic habitats may be subject to regulation under Section 404 of the Clean Water Act, or other State/Federal statutes.

For more information please contact the Regulatory Program of the local U.S. Army Corps of Engineers District.

Please note that the NWI data being shown may be out of date. We are currently working to update our NWI data set. We recommend you verify these results with a site visit to determine the actual extent of wetlands on site.

THERE ARE NO WETLANDS WITHIN YOUR PROJECT AREA.

IPaC User Contact Information

Agency: California Department of Transportation District 1
Name: Bryan Atkinson
Address: 1656 Union Street
City: Eureka
State: CA
Zip: 95501
Email bryan.atkinson@dot.ca.gov
Phone: 7072980954

NMFS Species Tool accessed 01/12/2023.

Quads include Fortuna, Hydesville, Scotia, Redcrest, Weott, Myers Flat, Miranda, and Garberville.

Quad Name **Fortuna**
Quad Number **40124-E2**

ESA Anadromous Fish

SONCC Coho ESU (T) - **X**
CCC Coho ESU (E) -
CC Chinook Salmon ESU (T) - **X**
CVSR Chinook Salmon ESU (T) -
SRWR Chinook Salmon ESU (E) -
NC Steelhead DPS (T) - **X**
CCC Steelhead DPS (T) -
SCCC Steelhead DPS (T) -
SC Steelhead DPS (E) -
CCV Steelhead DPS (T) -
Eulachon (T) -
sDPS Green Sturgeon (T) -

ESA Anadromous Fish Critical Habitat

SONCC Coho Critical Habitat - **X**
CCC Coho Critical Habitat -
CC Chinook Salmon Critical Habitat - **X**
CVSR Chinook Salmon Critical Habitat -
SRWR Chinook Salmon Critical Habitat -
NC Steelhead Critical Habitat - **X**
CCC Steelhead Critical Habitat -
SCCC Steelhead Critical Habitat -
SC Steelhead Critical Habitat -
CCV Steelhead Critical Habitat -
Eulachon Critical Habitat -
sDPS Green Sturgeon Critical Habitat -

ESA Marine Invertebrates

Range Black Abalone (E) -
Range White Abalone (E) -

ESA Marine Invertebrates Critical Habitat

Black Abalone Critical Habitat -

ESA Sea Turtles

East Pacific Green Sea Turtle (T) -
Olive Ridley Sea Turtle (T/E) -
Leatherback Sea Turtle (E) -
North Pacific Loggerhead Sea Turtle (E) -

ESA Whales

Blue Whale (E) -
Fin Whale (E) -
Humpback Whale (E) -
Southern Resident Killer Whale (E) -
North Pacific Right Whale (E) -
Sei Whale (E) -
Sperm Whale (E) -

ESA Pinnipeds

Guadalupe Fur Seal (T) -
Steller Sea Lion Critical Habitat -

Essential Fish Habitat

Coho EFH - X
Chinook Salmon EFH - X
Groundfish EFH - X
Coastal Pelagics EFH - X
Highly Migratory Species EFH -

MMPA Species (See list at left)

ESA and MMPA Cetaceans/Pinnipeds

See list at left and consult the NMFS Long Beach office
562-980-4000

MMPA Cetaceans -

MMPA Pinnipeds -

Quad Name **Hydesville**
Quad Number **40124-E1**

ESA Anadromous Fish

SONCC Coho ESU (T) - **X**
CCC Coho ESU (E) -
CC Chinook Salmon ESU (T) - **X**
CVSR Chinook Salmon ESU (T) -
SRWR Chinook Salmon ESU (E) -
NC Steelhead DPS (T) - **X**
CCC Steelhead DPS (T) -
SCCC Steelhead DPS (T) -
SC Steelhead DPS (E) -
CCV Steelhead DPS (T) -
Eulachon (T) -
sDPS Green Sturgeon (T) -

ESA Anadromous Fish Critical Habitat

SONCC Coho Critical Habitat - **X**
CCC Coho Critical Habitat -
CC Chinook Salmon Critical Habitat - **X**
CVSR Chinook Salmon Critical Habitat -
SRWR Chinook Salmon Critical Habitat -
NC Steelhead Critical Habitat - **X**
CCC Steelhead Critical Habitat -
SCCC Steelhead Critical Habitat -
SC Steelhead Critical Habitat -
CCV Steelhead Critical Habitat -
Eulachon Critical Habitat -
sDPS Green Sturgeon Critical Habitat -

ESA Marine Invertebrates

Range Black Abalone (E) -
Range White Abalone (E) -

ESA Marine Invertebrates Critical Habitat

Black Abalone Critical Habitat -

ESA Sea Turtles

East Pacific Green Sea Turtle (T) -
Olive Ridley Sea Turtle (T/E) -
Leatherback Sea Turtle (E) -
North Pacific Loggerhead Sea Turtle (E) -

ESA Whales

Blue Whale (E) -
Fin Whale (E) -
Humpback Whale (E) -
Southern Resident Killer Whale (E) -
North Pacific Right Whale (E) -
Sei Whale (E) -
Sperm Whale (E) -

ESA Pinnipeds

Guadalupe Fur Seal (T) -
Steller Sea Lion Critical Habitat -

Essential Fish Habitat

Coho EFH - X
Chinook Salmon EFH - X
Groundfish EFH - X
Coastal Pelagics EFH - X
Highly Migratory Species EFH -

MMPA Species (See list at left)

ESA and MMPA Cetaceans/Pinnipeds

See list at left and consult the NMFS Long Beach office 562-980-4000

Quad Name **Scotia**
Quad Number **40124-D1**

ESA Anadromous Fish

SONCC Coho ESU (T) - **X**
CCC Coho ESU (E) -
CC Chinook Salmon ESU (T) - **X**
CVSR Chinook Salmon ESU (T) -
SRWR Chinook Salmon ESU (E) -
NC Steelhead DPS (T) - **X**
CCC Steelhead DPS (T) -
SCCC Steelhead DPS (T) -
SC Steelhead DPS (E) -
CCV Steelhead DPS (T) -
Eulachon (T) -
sDPS Green Sturgeon (T) -

ESA Anadromous Fish Critical Habitat

SONCC Coho Critical Habitat - **X**
CCC Coho Critical Habitat -
CC Chinook Salmon Critical Habitat - **X**
CVSR Chinook Salmon Critical Habitat -
SRWR Chinook Salmon Critical Habitat -
NC Steelhead Critical Habitat - **X**
CCC Steelhead Critical Habitat -
SCCC Steelhead Critical Habitat -
SC Steelhead Critical Habitat -
CCV Steelhead Critical Habitat -
Eulachon Critical Habitat -
sDPS Green Sturgeon Critical Habitat -

ESA Marine Invertebrates

Range Black Abalone (E) -
Range White Abalone (E) -

ESA Marine Invertebrates Critical Habitat

Black Abalone Critical Habitat -

ESA Sea Turtles

East Pacific Green Sea Turtle (T) -
Olive Ridley Sea Turtle (T/E) -
Leatherback Sea Turtle (E) -
North Pacific Loggerhead Sea Turtle (E) -

ESA Whales

Blue Whale (E) -
Fin Whale (E) -
Humpback Whale (E) -
Southern Resident Killer Whale (E) -
North Pacific Right Whale (E) -
Sei Whale (E) -
Sperm Whale (E) -

ESA Pinnipeds

Guadalupe Fur Seal (T) -
Steller Sea Lion Critical Habitat -

Essential Fish Habitat

Coho EFH - X
Chinook Salmon EFH - X
Groundfish EFH - X
Coastal Pelagics EFH -
Highly Migratory Species EFH -

MMPA Species (See list at left)

ESA and MMPA Cetaceans/Pinnipeds

See list at left and consult the NMFS Long Beach office 562-980-4000

Quad Name **Redcrest**
Quad Number **40123-D8**

ESA Anadromous Fish

SONCC Coho ESU (T) - **X**
CCC Coho ESU (E) -
CC Chinook Salmon ESU (T) - **X**
CVSR Chinook Salmon ESU (T) -
SRWR Chinook Salmon ESU (E) -
NC Steelhead DPS (T) - **X**
CCC Steelhead DPS (T) -
SCCC Steelhead DPS (T) -
SC Steelhead DPS (E) -
CCV Steelhead DPS (T) -
Eulachon (T) -
sDPS Green Sturgeon (T) -

ESA Anadromous Fish Critical Habitat

SONCC Coho Critical Habitat - **X**
CCC Coho Critical Habitat -
CC Chinook Salmon Critical Habitat - **X**
CVSR Chinook Salmon Critical Habitat -
SRWR Chinook Salmon Critical Habitat -
NC Steelhead Critical Habitat - **X**
CCC Steelhead Critical Habitat -
SCCC Steelhead Critical Habitat -
SC Steelhead Critical Habitat -
CCV Steelhead Critical Habitat -
Eulachon Critical Habitat -
sDPS Green Sturgeon Critical Habitat -

ESA Marine Invertebrates

Range Black Abalone (E) -
Range White Abalone (E) -

ESA Marine Invertebrates Critical Habitat

Black Abalone Critical Habitat -

ESA Sea Turtles

East Pacific Green Sea Turtle (T) -
Olive Ridley Sea Turtle (T/E) -
Leatherback Sea Turtle (E) -
North Pacific Loggerhead Sea Turtle (E) -

ESA Whales

Blue Whale (E) -
Fin Whale (E) -
Humpback Whale (E) -
Southern Resident Killer Whale (E) -
North Pacific Right Whale (E) -
Sei Whale (E) -
Sperm Whale (E) -

ESA Pinnipeds

Guadalupe Fur Seal (T) -
Steller Sea Lion Critical Habitat -

Essential Fish Habitat

Coho EFH - X
Chinook Salmon EFH - X
Groundfish EFH -
Coastal Pelagics EFH -
Highly Migratory Species EFH -

MMPA Species (See list at left)

ESA and MMPA Cetaceans/Pinnipeds

See list at left and consult the NMFS Long Beach office 562-980-4000

Quad Name **Weott**
Quad Number **40123-C8**

ESA Anadromous Fish

SONCC Coho ESU (T) - **X**
CCC Coho ESU (E) -
CC Chinook Salmon ESU (T) - **X**
CVSR Chinook Salmon ESU (T) -
SRWR Chinook Salmon ESU (E) -
NC Steelhead DPS (T) - **X**
CCC Steelhead DPS (T) -
SCCC Steelhead DPS (T) -
SC Steelhead DPS (E) -
CCV Steelhead DPS (T) -
Eulachon (T) -
sDPS Green Sturgeon (T) -

ESA Anadromous Fish Critical Habitat

SONCC Coho Critical Habitat - **X**
CCC Coho Critical Habitat -
CC Chinook Salmon Critical Habitat - **X**
CVSR Chinook Salmon Critical Habitat -
SRWR Chinook Salmon Critical Habitat -
NC Steelhead Critical Habitat - **X**
CCC Steelhead Critical Habitat -
SCCC Steelhead Critical Habitat -
SC Steelhead Critical Habitat -
CCV Steelhead Critical Habitat -
Eulachon Critical Habitat -
sDPS Green Sturgeon Critical Habitat -

ESA Marine Invertebrates

Range Black Abalone (E) -
Range White Abalone (E) -

ESA Marine Invertebrates Critical Habitat

Black Abalone Critical Habitat -

ESA Sea Turtles

East Pacific Green Sea Turtle (T) -
Olive Ridley Sea Turtle (T/E) -
Leatherback Sea Turtle (E) -
North Pacific Loggerhead Sea Turtle (E) -

ESA Whales

Blue Whale (E) -
Fin Whale (E) -
Humpback Whale (E) -
Southern Resident Killer Whale (E) -
North Pacific Right Whale (E) -
Sei Whale (E) -
Sperm Whale (E) -

ESA Pinnipeds

Guadalupe Fur Seal (T) -
Steller Sea Lion Critical Habitat -

Essential Fish Habitat

Coho EFH - X
Chinook Salmon EFH - X
Groundfish EFH -
Coastal Pelagics EFH -
Highly Migratory Species EFH -

MMPA Species (See list at left)

ESA and MMPA Cetaceans/Pinnipeds

See list at left and consult the NMFS Long Beach office 562-980-4000

Quad Name **Myers Flat**
Quad Number **40123-C7**

ESA Anadromous Fish

SONCC Coho ESU (T) - **X**
CCC Coho ESU (E) -
CC Chinook Salmon ESU (T) - **X**
CVSR Chinook Salmon ESU (T) -
SRWR Chinook Salmon ESU (E) -
NC Steelhead DPS (T) - **X**
CCC Steelhead DPS (T) -
SCCC Steelhead DPS (T) -
SC Steelhead DPS (E) -
CCV Steelhead DPS (T) -
Eulachon (T) -
sDPS Green Sturgeon (T) -

ESA Anadromous Fish Critical Habitat

SONCC Coho Critical Habitat - **X**
CCC Coho Critical Habitat -
CC Chinook Salmon Critical Habitat - **X**
CVSR Chinook Salmon Critical Habitat -
SRWR Chinook Salmon Critical Habitat -
NC Steelhead Critical Habitat - **X**
CCC Steelhead Critical Habitat -
SCCC Steelhead Critical Habitat -
SC Steelhead Critical Habitat -
CCV Steelhead Critical Habitat -
Eulachon Critical Habitat -
sDPS Green Sturgeon Critical Habitat -

ESA Marine Invertebrates

Range Black Abalone (E) -
Range White Abalone (E) -

ESA Marine Invertebrates Critical Habitat

Black Abalone Critical Habitat -

ESA Sea Turtles

East Pacific Green Sea Turtle (T) -
Olive Ridley Sea Turtle (T/E) -
Leatherback Sea Turtle (E) -
North Pacific Loggerhead Sea Turtle (E) -

ESA Whales

Blue Whale (E) -
Fin Whale (E) -
Humpback Whale (E) -
Southern Resident Killer Whale (E) -
North Pacific Right Whale (E) -
Sei Whale (E) -
Sperm Whale (E) -

ESA Pinnipeds

Guadalupe Fur Seal (T) -
Steller Sea Lion Critical Habitat -

Essential Fish Habitat

Coho EFH - X
Chinook Salmon EFH - X
Groundfish EFH -
Coastal Pelagics EFH -
Highly Migratory Species EFH -

MMPA Species (See list at left)

ESA and MMPA Cetaceans/Pinnipeds

See list at left and consult the NMFS Long Beach office 562-980-4000

Quad Name **Miranda**
Quad Number **40123-B7**

ESA Anadromous Fish

SONCC Coho ESU (T) - **X**
CCC Coho ESU (E) -
CC Chinook Salmon ESU (T) - **X**
CVSR Chinook Salmon ESU (T) -
SRWR Chinook Salmon ESU (E) -
NC Steelhead DPS (T) - **X**
CCC Steelhead DPS (T) -
SCCC Steelhead DPS (T) -
SC Steelhead DPS (E) -
CCV Steelhead DPS (T) -
Eulachon (T) -
sDPS Green Sturgeon (T) -

ESA Anadromous Fish Critical Habitat

SONCC Coho Critical Habitat - **X**
CCC Coho Critical Habitat -
CC Chinook Salmon Critical Habitat - **X**
CVSR Chinook Salmon Critical Habitat -
SRWR Chinook Salmon Critical Habitat -
NC Steelhead Critical Habitat - **X**
CCC Steelhead Critical Habitat -
SCCC Steelhead Critical Habitat -
SC Steelhead Critical Habitat -
CCV Steelhead Critical Habitat -
Eulachon Critical Habitat -
sDPS Green Sturgeon Critical Habitat -

ESA Marine Invertebrates

Range Black Abalone (E) -
Range White Abalone (E) -

ESA Marine Invertebrates Critical Habitat

Black Abalone Critical Habitat -

ESA Sea Turtles

East Pacific Green Sea Turtle (T) -
Olive Ridley Sea Turtle (T/E) -
Leatherback Sea Turtle (E) -
North Pacific Loggerhead Sea Turtle (E) -

ESA Whales

Blue Whale (E) -
Fin Whale (E) -
Humpback Whale (E) -
Southern Resident Killer Whale (E) -
North Pacific Right Whale (E) -
Sei Whale (E) -
Sperm Whale (E) -

ESA Pinnipeds

Guadalupe Fur Seal (T) -
Steller Sea Lion Critical Habitat -

Essential Fish Habitat

Coho EFH - X
Chinook Salmon EFH - X
Groundfish EFH -
Coastal Pelagics EFH -
Highly Migratory Species EFH -

MMPA Species (See list at left)

ESA and MMPA Cetaceans/Pinnipeds

See list at left and consult the NMFS Long Beach office 562-980-4000

Quad Name **Garberville**
Quad Number **40123-A7**

ESA Anadromous Fish

SONCC Coho ESU (T) - **X**
CCC Coho ESU (E) -
CC Chinook Salmon ESU (T) - **X**
CVSR Chinook Salmon ESU (T) -
SRWR Chinook Salmon ESU (E) -
NC Steelhead DPS (T) - **X**
CCC Steelhead DPS (T) -
SCCC Steelhead DPS (T) -
SC Steelhead DPS (E) -
CCV Steelhead DPS (T) -
Eulachon (T) -
sDPS Green Sturgeon (T) -

ESA Anadromous Fish Critical Habitat

SONCC Coho Critical Habitat - **X**
CCC Coho Critical Habitat -
CC Chinook Salmon Critical Habitat - **X**
CVSR Chinook Salmon Critical Habitat -
SRWR Chinook Salmon Critical Habitat -
NC Steelhead Critical Habitat - **X**
CCC Steelhead Critical Habitat -
SCCC Steelhead Critical Habitat -
SC Steelhead Critical Habitat -
CCV Steelhead Critical Habitat -
Eulachon Critical Habitat -
sDPS Green Sturgeon Critical Habitat -

ESA Marine Invertebrates

Range Black Abalone (E) -
Range White Abalone (E) -

ESA Marine Invertebrates Critical Habitat

Black Abalone Critical Habitat -

ESA Sea Turtles

East Pacific Green Sea Turtle (T) -
Olive Ridley Sea Turtle (T/E) -
Leatherback Sea Turtle (E) -
North Pacific Loggerhead Sea Turtle (E) -

ESA Whales

Blue Whale (E) -
Fin Whale (E) -
Humpback Whale (E) -
Southern Resident Killer Whale (E) -
North Pacific Right Whale (E) -
Sei Whale (E) -
Sperm Whale (E) -

ESA Pinnipeds

Guadalupe Fur Seal (T) -
Steller Sea Lion Critical Habitat -

Essential Fish Habitat

Coho EFH - X
Chinook Salmon EFH - X
Groundfish EFH -
Coastal Pelagics EFH -
Highly Migratory Species EFH -

MMPA Species (See list at left)

ESA and MMPA Cetaceans/Pinnipeds

See list at left and consult the NMFS Long Beach office 562-980-4000

MMPA Cetaceans -
MMPA Pinnipeds -

CNPS Rare Plant Inventory

Search Results

80 matches found. Click on scientific name for details

Search Criteria: Quad is one of
[**4012462:4012461:4012368:4012452:4012451:4012358:4012442:4012441:4012348:4012347:4012431:4012338:4012336:4012337:4012328:4012327:4012326:4012316:4012317:4012318:3912388:3912387:3912386**]

▲ SCIENTIFIC NAME	COMMON NAME	FAMILY	LIFEFORM	BLOOMING PERIOD	FED LIST	STATE LIST	GLOBAL RANK	STATE RANK	CA RARE PLANT RANK	CA ENDEMIC	DATE ADDED	PHOTO
Abronia umbellata var. *breviflora*	pink sand-verbena	Nyctaginaceae	annual herb	Jun-Oct	None	None	G4G5T2	S2	1B.1		1988-01-01	 ©2021 Scot Loring
Angelica lucida	sea-watch	Apiaceae	perennial herb	Apr-Sep	None	None	G5	S3	4.2		2001-01-01	 © 2022 Stillwater Sciences
Arabis mcdonaldiana	McDonald's rockcress	Brassicaceae	perennial herb	May-Jul	FE	CE	G3	S3	1B.1		1974-01-01	 © 2003 Norman Jensen
Arctostaphylos stanfordiana ssp. *raichei*	Raiche's manzanita	Ericaceae	perennial evergreen shrub	Feb-Apr	None	None	G3T2	S2	1B.1	Yes	1988-01-01	No Photo Available
Astragalus agnicidus	Humboldt County milk-vetch	Fabaceae	perennial herb	Apr-Sep	None	CE	G2	S2	1B.1	Yes	1974-01-01	 ©2004 Dean Wm. Taylor
Astragalus rattanii var. *rattanii*	Rattan's milk-vetch	Fabaceae	perennial herb	Apr-Jul	None	None	G4T4	S4	4.3	Yes	1988-01-01	No Photo Available
Calamagrostis bolanderi	Bolander's reed grass	Poaceae	perennial rhizomatous herb	May-Aug	None	None	G4	S4	4.2	Yes	1974-01-01	 ©2009 Zoya Akulova
Calamagrostis foliosa	leafy reed grass	Poaceae	perennial herb	May-Sep	None	CR	G3	S3	4.2	Yes	1980-01-01	 ©2011 Zoya Akulova
Cardamine angulata	seaside bittercress	Brassicaceae	perennial herb	(Jan)Mar-Jul	None	None	G4G5	S3	2B.2		2012-04-10	 © 2021 Scot Loring
Carex arcta	northern clustered sedge	Cyperaceae	perennial herb	Jun-Sep	None	None	G5	S1	2B.2		2001-01-01	 © 2006 Dean Wm. Taylor

Carex leptalea	bristle-stalked sedge	Cyperaceae	perennial rhizomatous herb	Mar-Jul	None	None	G5	S1	2B.2		1994-01-01	 © 2003 Steve Matson
Castilleja ambigua var. *ambigua*	johnny-nip	Orobanchaceae	annual herb (hemiparasitic)	Mar-Aug	None	None	G4T4	S3S4	4.2		2009-02-04	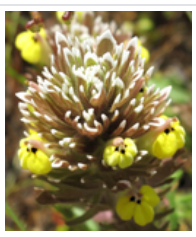 ©2011 Dylan Neubauer
Castilleja ambigua var. *humboldtiensis*	Humboldt Bay owl's-clover	Orobanchaceae	annual herb (hemiparasitic)	Apr-Aug	None	None	G4T2	S2	1B.2	Yes	1974-01-01	 ©2017 Steve Matson
Castilleja litoralis	Oregon coast paintbrush	Orobanchaceae	perennial herb (hemiparasitic)	Jun	None	None	G3	S3	2B.2		2001-01-01	 ©2010 Dana York
Castilleja mendocinensis	Mendocino Coast paintbrush	Orobanchaceae	perennial herb (hemiparasitic)	Apr-Aug	None	None	G2	S2	1B.2		1974-01-01	 ©2015 John Doyen
Ceanothus foliosus var. *vineatus*	Vine Hill ceanothus	Rhamnaceae	perennial evergreen shrub	Mar-May	None	None	G3T1	S1	1B.1	Yes	1988-01-01	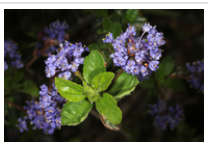 © 2013 Terry Gosliner
Ceanothus gloriosus var. *exaltatus*	glory brush	Rhamnaceae	perennial evergreen shrub	Mar-Jun(Aug)	None	None	G4T4	S4	4.3	Yes	2001-01-01	 ©2018 John Doyen
Chloropyron maritimum ssp. *palustre*	Point Reyes salty bird's-beak	Orobanchaceae	annual herb (hemiparasitic)	Jun-Oct	None	None	G4?T2	S2	1B.2		1974-01-01	 ©2017 John Doyen
Chrysosplenium glechomifolium	Pacific golden saxifrage	Saxifragaceae	perennial herb	Feb-Jun	None	None	G5?	S3	4.3		2015-10-15	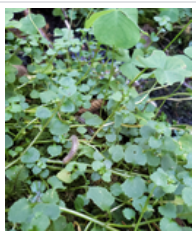 © 2021 Scot Loring
Clarkia amoena ssp. *whitneyi*	Whitney's farewell-to-spring	Onagraceae	annual herb	Jun-Aug	None	None	G5T1	S1	1B.1	Yes	1980-01-01	No Photo Available
Collomia tracyi	Tracy's collomia	Polemoniaceae	annual herb	Jun-Jul	None	None	G4	S4	4.3	Yes	1974-01-01	 ©2018 Julie Kierstead Nelson
Coptis laciniata	Oregon goldthread	Ranunculaceae	perennial rhizomatous herb	(Feb)Mar-May(Sep-Nov)	None	None	G4?	S3?	4.2		2006-10-16	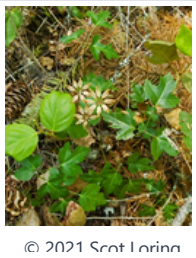 © 2021 Scot Loring

Cypripedium californicum	California lady's-slipper	Orchidaceae	perennial rhizomatous herb	Apr-Aug(Sep)	None	None	G3	S4	4.2		1980-01-01	 © 2012 Barry Rice
Downingia willamettensis	Cascade downingia	Campanulaceae	annual herb	Jun-Jul(Sep)	None	None	G4	S2	2B.2		2018-09-20	No Photo Available
Epilobium septentrionale	Humboldt County fuchsia	Onagraceae	perennial herb	Jul-Sep	None	None	G4	S4	4.3	Yes	1974-01-01	 Image by BLM,Arcata Field Office
Erigeron biolettii	streamside daisy	Asteraceae	perennial herb	Jun-Oct	None	None	G3?	S3?	3	Yes	1994-01-01	 ©2015 Doug Wirtz
Erigeron robustior	robust daisy	Asteraceae	perennial herb	Jun-Jul	None	None	G3	S3	4.3	Yes	1988-01-01	No Photo Available
Eriogonum kelloggii	Kellogg's buckwheat	Polygonaceae	perennial herb	(May)Jun-Aug	None	CE	G2	S2	1B.2	Yes	1974-01-01	No Photo Available
Erythronium citrinum var. *citrinum*	lemon-colored fawn lily	Liliaceae	perennial bulbiferous herb	Mar-May	None	None	G4T4	S3	4.3		1974-01-01	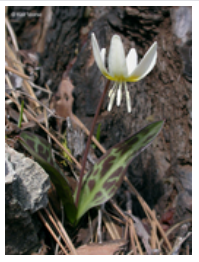 ©2008 Keir Morse
Erythronium oregonum	giant fawn lily	Liliaceae	perennial herb	Mar-Jun(Jul)	None	None	G5	S2	2B.2		2007-07-23	 ©2021 Scot Loring
Erythronium revolutum	coast fawn lily	Liliaceae	perennial bulbiferous herb	Mar-Jul(Aug)	None	None	G4G5	S3	2B.2		2001-01-01	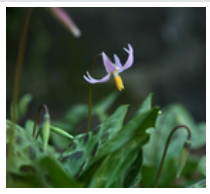 ©2007 Steve Matson
Fissidens pauperculus	minute pocket moss	Fissidentaceae	moss		None	None	G3?	S2	1B.2		2001-01-01	 ©2021 Scot Loring
Fritillaria purdyi	Purdy's fritillary	Liliaceae	perennial bulbiferous herb	Mar-Jun	None	None	G4	S4	4.3		1974-01-01	 Aaron Schusteff, 2004
Gentiana setigera	Mendocino gentian	Gentianaceae	perennial herb	(Apr-Jul)Aug-Sep	None	None	G2	S2	1B.2		1980-01-01	 ©2008 Keir Morse
Gilia capitata ssp. *pacifica*	Pacific gilia	Polemoniaceae	annual herb	Apr-Aug	None	None	G5T3	S2	1B.2		2001-01-01	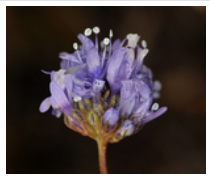 © 2016 Steve Matson
Gilia millefoliata	dark-eyed gilia	Polemoniaceae	annual herb	Apr-Jul	None	None	G2	S2	1B.2		2001-01-01	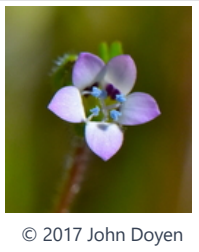 © 2017 John Doyen
Glehnia littoralis ssp. *leiocarpa*	American glehnia	Apiaceae	perennial herb	May-Aug	None	None	G5T5	S2S3	4.2		2001-01-01	 ©2017 Steve Matson

Hemizonia congesta ssp. *tracyi*	Tracy's tarplant	Asteraceae	annual herb	(Mar-Apr)May-Oct	None	None	G5T4	S4	4.3	Yes	1974-01-01	 © 2016 Steve Matson
Hesperevax sparsiflora var. *brevifolia*	short-leaved evax	Asteraceae	annual herb	Mar-Jun	None	None	G4T3	S3	1B.2		1994-01-01	 © 2006 Doreen L. Smith
Hosackia gracilis	harlequin lotus	Fabaceae	perennial rhizomatous herb	Mar-Jul	None	None	G3G4	S3	4.2		2004-01-01	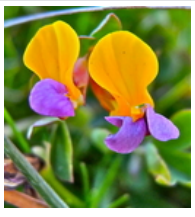 © 2015 John Doyen
Howellia aquatilis	water howellia	Campanulaceae	annual herb (aquatic)	Jun	FD	None	G3	S2	2B.2		1974-01-01	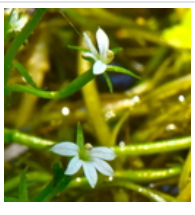 ©2018 John Doyen
Kopsiopsis hookeri	small groundcone	Orobanchaceae	perennial rhizomatous herb (parasitic)	Apr-Aug	None	None	G4?	S1S2	2B.3		1994-01-01	 ©2016 Vernon Smith
Lathyrus glandulosus	sticky pea	Fabaceae	perennial rhizomatous herb	Apr-Jun	None	None	G3	S3	4.3	Yes	1988-01-01	 2015 Barrett Jeffery
Layia carnosa	beach layia	Asteraceae	annual herb	Mar-Jul	FT	CE	G2	S2	1B.1		1988-01-01	 © 2007 Aaron Schusteff
Leptosiphon aureus	bristly leptosiphon	Polemoniaceae	annual herb	Apr-Jul	None	None	G4?	S4?	4.2	Yes	1994-01-01	 © 2007 Len Blumin
Leptosiphon latisectus	broad-lobed leptosiphon	Polemoniaceae	annual herb	Apr-Jun	None	None	G4	S4	4.3	Yes	2001-01-01	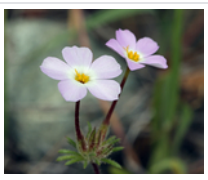 © 2015 Steve Matson
Leptosiphon rattanii	Rattan's leptosiphon	Polemoniaceae	annual herb	May-Jul	None	None	G4	S4	4.3	Yes	1974-01-01	 © Bob Patterson and CNPS
Lilium kelloggii	Kellogg's lily	Liliaceae	perennial bulbiferous herb	(Feb)May-Aug	None	None	G3	S3	4.3		1974-01-01	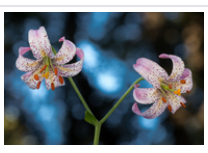 © 2019 Spencer Riffle

Lilium occidentale	western lily	Liliaceae	perennial bulbiferous herb	Jun-Jul	FE	CE	G1G2	S1	1B.1		1974-01-01	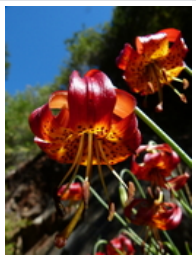 © 2018 Jason Matthias Mills
Lilium rubescens	redwood lily	Liliaceae	perennial bulbiferous herb	(Mar)Apr-Aug(Sep)	None	None	G3	S3	4.2	Yes	1974-01-01	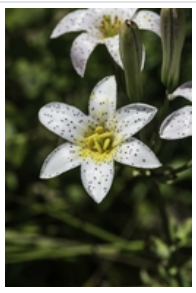 Gerald and Buff Corsi © 2022 California Academy of Sciences
Lilium washingtonianum ssp. *purpurascens*	purple-flowered Washington lily	Liliaceae	perennial bulbiferous herb	Jun-Aug	None	None	G4T4	S3S4	4.3		1974-01-01	 © 2016 Barry Rice
Listera cordata	heart-leaved twayblade	Orchidaceae	perennial herb	Feb-Jul	None	None	G5	S4	4.2		1974-01-01	 ©2013 Dr. Amadej Trnkoczy 0000 0000 0513 2468
Lomatium engelmannii	Engelmann's lomatium	Apiaceae	perennial herb	May-Aug	None	None	G3	S3	4.3		1974-01-01	 ©2018 John Doyen
Lycopodium clavatum	running-pine	Lycopodiaceae	perennial rhizomatous herb	Jun-Aug(Sep)	None	None	G5	S3	4.1		1974-01-01	 © 2021 Scot Loring
Lycopus uniflorus	northern bugleweed	Lamiaceae	perennial herb	Jul-Sep	None	None	G5	S4	4.3		1980-01-01	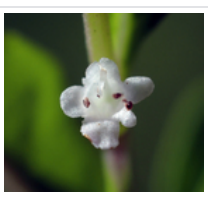 © 2021 Scot Loring
Meesia triquetra	three-ranked hump moss	Meesiaceae	moss	Jul	None	None	G5	S4	4.2		2001-01-01	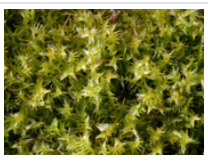 Steve Matson 2008
Mitellastra caulescens	leafy-stemmed mitrewort	Saxifragaceae	perennial rhizomatous herb	(Mar)Apr-Oct	None	None	G5	S4	4.2		2001-01-01	 © 2014 Dana York
Montia howellii	Howell's montia	Montiaceae	annual herb	(Feb)Mar-May	None	None	G3G4	S2	2B.2		1994-01-01	 © 2004 Dean Wm. Taylor
Navarretia leucocephala ssp. *bakeri*	Baker's navarretia	Polemoniaceae	annual herb	Apr-Jul	None	None	G4T2	S2	1B.1	Yes	1994-01-01	 © 2018 Barry Rice

Noccaea fendleri ssp. *californica*	Kneeland Prairie pennycress	Brassicaceae	perennial herb	May-Jun	FE	None	G5?T1	S1	1B.1	Yes	1980-01-01	No Photo Available
Packera bolanderi var. *bolanderi*	seacoast ragwort	Asteraceae	perennial rhizomatous herb	(Jan-Apr)May-Jul(Aug)	None	None	G4T4	S2S3	2B.2		2001-01-01	 © 2021 Scot Loring
Piperia candida	white-flowered rein orchid	Orchidaceae	perennial herb	(Mar-Apr)May-Sep	None	None	G3?	S3	1B.2		1994-01-01	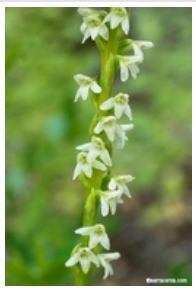 ©2016 Barry Rice
Pityopus californicus	California pinefoot	Ericaceae	perennial herb (achlorophyllous)	(Mar-Apr)May-Aug	None	None	G4G5	S4	4.2		1974-01-01	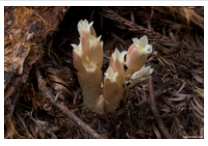 ©2009 Barry Rice
Pleuropogon hooverianus	North Coast semaphore grass	Poaceae	perennial rhizomatous herb	Apr-Jun	None	CT	G2	S2	1B.1	Yes	1974-01-01	No Photo Available
Pleuropogon refractus	nodding semaphore grass	Poaceae	perennial rhizomatous herb	(Feb-Mar)Apr-Aug	None	None	G4	S4	4.2		1974-01-01	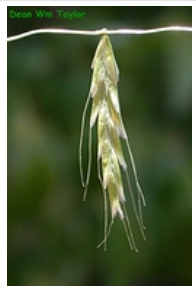 ©2004 Dean Wm. Taylor
Polemonium carneum	Oregon polemonium	Polemoniaceae	perennial herb	Apr-Sep	None	None	G3G4	S2	2B.2		2008-11-03	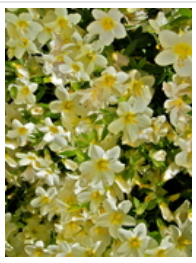 ©2018 John Doyen
Rhynchospora globularis	round-headed beaked-rush	Cyperaceae	perennial rhizomatous herb	Jul-Aug	None	None	G5	S1	2B.1		1974-01-01	No Photo Available
Ribes laxiflorum	trailing black currant	Grossulariaceae	perennial deciduous shrub	Mar-Jul(Aug)	None	None	G5?	S3	4.3		1974-01-01	 ©2010 Dana York
Ribes roezlii var. *amictum*	hoary gooseberry	Grossulariaceae	perennial deciduous shrub	Mar-Apr	None	None	G5T4	S4	4.3	Yes	2001-01-01	 ©1973 Dean Wm. Taylor
Sedum eastwoodiae	Red Mountain stonecrop	Crassulaceae	perennial herb	May-Jul	None	None	G5T2	S2	1B.2	Yes	1980-01-01	No Photo Available
Sidalcea malachroides	maple-leaved checkerbloom	Malvaceae	perennial herb	(Mar)Apr-Aug	None	None	G3	S3	4.2		1994-01-01	 ©2005 Dean Wm. Taylor
Sidalcea malviflora ssp. *patula*	Siskiyou checkerbloom	Malvaceae	perennial rhizomatous herb	(Mar)May-Aug	None	None	G5T2	S2	1B.2		1994-01-01	 ©2004 Dean Wm. Taylor
Sidalcea oregana ssp. *eximia*	coast checkerbloom	Malvaceae	perennial herb	Jun-Aug	None	None	G5T1	S1	1B.2	Yes	1994-01-01	No Photo Available
Silene bolanderi	Bolander's catchfly	Caryophyllaceae	perennial herb	May-Jun	None	None	G2	S2	1B.2		2021-07-30	No Photo Available

Silene greenei ssp. *angustifolia*	Red Mountain catchfly	Caryophyllaceae	perennial herb	May-Jun	None	CE	G5T1	S1	1B.2	Yes	1980-01-01	 © 2015 Cherilyn Burton
Spergularia canadensis var. *occidentalis*	western sand-spurrey	Caryophyllaceae	annual herb	Jun-Aug	None	None	G5T4	S1	2B.1		2001-01-01	No Photo Available
Tiarella trifoliata var. *trifoliata*	trifoliate laceflower	Saxifragaceae	perennial rhizomatous herb	(May)Jun-Aug	None	None	G5T5	S2S3	3.2		1980-01-01	 © 2021 Scot Loring
Tracyina rostrata	beaked tracyina	Asteraceae	annual herb	May-Jun	None	None	G2	S2	1B.2	Yes	1974-01-01	 ©2018 John Game
Usnea longissima	Methuselah's beard lichen	Parmeliaceae	fruticose lichen (epiphytic)		None	None	G4	S4	4.2		2014-03-01	 © 2021 Scot Loring
Viburnum ellipticum	oval-leaved viburnum	Viburnaceae	perennial deciduous shrub	May-Jun	None	None	G4G5	S3?	2B.3		1974-01-01	 © 2006 Tom Engstrom

Showing 1 to 80 of 80 entries

Suggested Citation:

California Native Plant Society, Rare Plant Program. 2023. Rare Plant Inventory (online edition, v9.5). Website https://www.rareplants.cnps.org [accessed 12 January 2023].

Selected Elements by Common Name

California Department of Fish and Wildlife

California Natural Diversity Database

Query Criteria: Quad IS (Fort Seward (4012326) OR Harris (4012316) OR Noble Butte (3912386) OR Garberville (4012317) OR Ettersburg (4012328) OR Miranda (4012327) OR Bear Harbor (3912388) OR Piercy (3912387) OR Briceland (4012318) OR Myers Flat (4012337) OR Weott (4012338) OR Blocksburg (4012336) OR Bull Creek (4012431) OR Bridgeville (4012347) OR Redcrest (4012348) OR Scotia (4012441) OR Taylor Peak (4012442) OR Owl Creek (4012358) OR Fortuna (4012452) OR Hydesville (4012451) OR Iaqua Buttes (4012368) OR McWhinney Creek (4012461) OR Fields Landing (4012462))

This is the 1/11/2023 updated list.

Species	Element Code	Federal Status	State Status	Global Rank	State Rank	Rare Plant Rank/CDFW SSC or FP
American peregrine falcon *Falco peregrinus anatum*	ABNKD06071	Delisted	Delisted	G4T4	S3S4	FP
Baker's navarretia *Navarretia leucocephala ssp. bakeri*	PDPLM0C0E1	None	None	G4T2	S2	1B.1
bald eagle *Haliaeetus leucocephalus*	ABNKC10010	Delisted	Endangered	G5	S3	FP
bank swallow *Riparia riparia*	ABPAU08010	None	Threatened	G5	S2	
beach layia *Layia carnosa*	PDAST5N010	Threatened	Endangered	G2	S2	1B.1
beaked tracyina *Tracyina rostrata*	PDAST9D010	None	None	G2	S2	1B.2
black-crowned night heron *Nycticorax nycticorax*	ABNGA11010	None	None	G5	S4	
Bolander's catchfly *Silene bolanderi*	PDCAR0U2L0	None	None	G2	S2	1B.2
bristle-stalked sedge *Carex leptalea*	PMCYP037E0	None	None	G5	S1	2B.2
California floater *Anodonta californiensis*	IMBIV04220	None	None	G3Q	S2?	
Cascade downingia *Downingia willamettensis*	PDCAM060E0	None	None	G4	S2	2B.2
chinook salmon - California coastal ESU *Oncorhynchus tshawytscha pop. 17*	AFCHA0205S	Threatened	None	G5T2Q	S2	
coast checkerbloom *Sidalcea oregana ssp. eximia*	PDMAL110K9	None	None	G5T1	S1	1B.2
coast cutthroat trout *Oncorhynchus clarkii clarkii*	AFCHA0208A	None	None	G5T4	S3	SSC
coast fawn lily *Erythronium revolutum*	PMLIL0U0F0	None	None	G4G5	S3	2B.2
coho salmon - southern Oregon / northern California ESU *Oncorhynchus kisutch pop. 2*	AFCHA02032	Threatened	Threatened	G5T2Q	S2	

Species	Element Code	Federal Status	State Status	Global Rank	State Rank	Rare Plant Rank/CDFW SSC or FP
Cooper's hawk *Accipiter cooperii*	ABNKC12040	None	None	G5	S4	WL
dark-eyed gilia *Gilia millefoliata*	PDPLM04130	None	None	G2	S2	1B.2
Del Norte salamander *Plethodon elongatus*	AAAAD12050	None	None	G4	S3	WL
eulachon *Thaleichthys pacificus*	AFCHB04010	Threatened	None	G5	S1	
Fisher *Pekania pennanti*	AMAJF01020	None	None	G5	S2S3	SSC
foothill yellow-legged frog - north coast DPS *Rana boylii pop. 1*	AAABH01051	None	None	G3TNRQ	S4	SSC
fringed myotis *Myotis thysanodes*	AMACC01090	None	None	G4	S3	
giant fawn lily *Erythronium oregonum*	PMLIL0U0C0	None	None	G5	S2	2B.2
golden eagle *Aquila chrysaetos*	ABNKC22010	None	None	G5	S3	FP
grasshopper sparrow *Ammodramus savannarum*	ABPBXA0020	None	None	G5	S3	SSC
great blue heron *Ardea herodias*	ABNGA04010	None	None	G5	S4	
great egret *Ardea alba*	ABNGA04040	None	None	G5	S4	
green sturgeon - southern DPS *Acipenser medirostris pop. 1*	AFCAA01031	Threatened	None	G2T1	S1	
hoary bat *Lasiurus cinereus*	AMACC05032	None	None	G3G4	S4	
Howell's montia *Montia howellii*	PDPOR05070	None	None	G3G4	S2	2B.2
Humboldt Bay owl's-clover *Castilleja ambigua var. humboldtiensis*	PDSCR0D402	None	None	G4T2	S2	1B.2
Humboldt County milk-vetch *Astragalus agnicidus*	PDFAB0F080	None	Endangered	G2	S2	1B.1
Humboldt marten *Martes caurina humboldtensis*	AMAJF01012	Threatened	Endangered	G4G5T1	S1	SSC
Humboldt mountain beaver *Aplodontia rufa humboldtiana*	AMAFA01017	None	None	G5TNR	SNR	
Kellogg's buckwheat *Eriogonum kelloggii*	PDPGN083A0	None	Endangered	G2	S2	1B.2
Kneeland Prairie pennycress *Noccaea fendleri ssp. californica*	PDBRA2P041	Endangered	None	G5?T1	S1	1B.1

Species	Element Code	Federal Status	State Status	Global Rank	State Rank	Rare Plant Rank/CDFW SSC or FP
leafy reed grass *Calamagrostis foliosa*	PMPOA170C0	None	Rare	G3	S3	4.2
leafy-stemmed mitrewort *Mitellastra caulescens*	PDSAX0N020	None	None	G5	S4	4.2
little willow flycatcher *Empidonax traillii brewsteri*	ABPAE33041	None	Endangered	G5T3T4	S1S2	
long-eared myotis *Myotis evotis*	AMACC01070	None	None	G5	S3	
longfin smelt *Spirinchus thaleichthys*	AFCHB03010	Candidate	Threatened	G5	S1	
long-legged myotis *Myotis volans*	AMACC01110	None	None	G4G5	S3	
maple-leaved checkerbloom *Sidalcea malachroides*	PDMAL110E0	None	None	G3	S3	4.2
marbled murrelet *Brachyramphus marmoratus*	ABNNN06010	Threatened	Endangered	G3	S2	
McDonald's rockcress *Arabis mcdonaldiana*	PDBRA06150	Endangered	Endangered	G3	S3	1B.1
Mendocino Coast paintbrush *Castilleja mendocinensis*	PDSCR0D3N0	None	None	G2	S2	1B.2
Mendocino gentian *Gentiana setigera*	PDGEN060S0	None	None	G2	S2	1B.2
Methuselah's beard lichen *Usnea longissima*	NLLEC5P420	None	None	G4	S4	4.2
minute pocket moss *Fissidens pauperculus*	NBMUS2W0U0	None	None	G3?	S2	1B.2
mountain plover *Charadrius montanus*	ABNNB03100	None	None	G3	S2S3	SSC
North American porcupine *Erethizon dorsatum*	AMAFJ01010	None	None	G5	S3	
North Central Coast Summer Steelhead Stream *North Central Coast Summer Steelhead Stream*	CARA2634CA	None	None	GNR	SNR	
northern clustered sedge *Carex arcta*	PMCYP030X0	None	None	G5	S1	2B.2
Northern Coastal Salt Marsh *Northern Coastal Salt Marsh*	CTT52110CA	None	None	G3	S3.2	
Northern Interior Cypress Forest *Northern Interior Cypress Forest*	CTT83220CA	None	None	G2	S2.2	
northern red-legged frog *Rana aurora*	AAABH01021	None	None	G4	S3	SSC
obscure bumble bee *Bombus caliginosus*	IIHYM24380	None	None	G2G3	S1S2	

Species	Element Code	Federal Status	State Status	Global Rank	State Rank	Rare Plant Rank/CDFW SSC or FP
Oregon coast paintbrush *Castilleja litoralis*	PDSCR0D012	None	None	G3	S3	2B.2
Oregon goldthread *Coptis laciniata*	PDRAN0A020	None	None	G4?	S3?	4.2
Oregon polemonium *Polemonium carneum*	PDPLM0E050	None	None	G3G4	S2	2B.2
osprey *Pandion haliaetus*	ABNKC01010	None	None	G5	S4	WL
oval-leaved viburnum *Viburnum ellipticum*	PDCPR07080	None	None	G4G5	S3?	2B.3
Pacific gilia *Gilia capitata ssp. pacifica*	PDPLM040B6	None	None	G5T3	S2	1B.2
Pacific lamprey *Entosphenus tridentatus*	AFBAA02100	None	None	G4	S3	SSC
Pacific tailed frog *Ascaphus truei*	AAABA01010	None	None	G4	S3S4	SSC
pallid bat *Antrozous pallidus*	AMACC10010	None	None	G4	S3	SSC
pink sand-verbena *Abronia umbellata var. breviflora*	PDNYC010N4	None	None	G4G5T2	S2	1B.1
Point Reyes salty bird's-beak *Chloropyron maritimum ssp. palustre*	PDSCR0J0C3	None	None	G4?T2	S2	1B.2
Raiche's manzanita *Arctostaphylos stanfordiana ssp. raichei*	PDERI041G2	None	None	G3T2	S2	1B.1
Red Mountain catchfly *Silene greenei ssp. angustifolia*	PDCAR0U0A2	None	Endangered	G5T1	S1	1B.2
Red Mountain stonecrop *Sedum eastwoodiae*	PDCRA0A0L1	None	None	G5T2	S2	1B.2
red-bellied newt *Taricha rivularis*	AAAAF02020	None	None	G2	S2	SSC
running-pine *Lycopodium clavatum*	PPLYC01080	None	None	G5	S3	4.1
seacoast ragwort *Packera bolanderi var. bolanderi*	PDAST8H0H1	None	None	G4T4	S2S3	2B.2
seaside bittercress *Cardamine angulata*	PDBRA0K010	None	None	G4G5	S3	2B.1
sharp-shinned hawk *Accipiter striatus*	ABNKC12020	None	None	G5	S4	WL
short-leaved evax *Hesperevax sparsiflora var. brevifolia*	PDASTE5011	None	None	G4T3	S3	1B.2
Siskiyou checkerbloom *Sidalcea malviflora ssp. patula*	PDMAL110F9	None	None	G5T2	S2	1B.2

Species	Element Code	Federal Status	State Status	Global Rank	State Rank	Rare Plant Rank/CDFW SSC or FP
small groundcone *Kopsiopsis hookeri*	PDORO01010	None	None	G4?	S1S2	2B.3
snowy egret *Egretta thula*	ABNGA06030	None	None	G5	S4	
Sonoma tree vole *Arborimus pomo*	AMAFF23030	None	None	G3	S3	SSC
southern torrent salamander *Rhyacotriton variegatus*	AAAAJ01020	None	None	G3G4	S2S3	SSC
steelhead - northern California DPS *Oncorhynchus mykiss irideus pop. 16*	AFCHA0209Q	Threatened	None	G5T2T3Q	S1	
steelhead - northern California DPS summer-run *Oncorhynchus mykiss irideus pop. 48*	AFCHA0213P	Threatened	Endangered	G5TNRQ	S2	
Steller sea lion *Eumetopias jubatus*	AMAJC03010	Delisted	None	G3	S2	
Ten Mile shoulderband *Noyo intersessa*	IMGASC5070	None	None	G2	S2	
three-ranked hump moss *Meesia triquetra*	NBMUS4L020	None	None	G5	S4	4.2
tidewater goby *Eucyclogobius newberryi*	AFCQN04010	Endangered	None	G3	S3	
Townsend's big-eared bat *Corynorhinus townsendii*	AMACC08010	None	None	G4	S2	SSC
tricolored blackbird *Agelaius tricolor*	ABPBXB0020	None	Threatened	G1G2	S1S2	SSC
Upland Douglas Fir Forest *Upland Douglas Fir Forest*	CTT82420CA	None	None	G4	S3.1	
Vine Hill ceanothus *Ceanothus foliosus var. vineatus*	PDRHA040D6	None	None	G3T1	S1	1B.1
water howellia *Howellia aquatilis*	PDCAM0A010	Delisted	None	G3	S2	2B.2
western brook lamprey *Lampetra richardsoni*	AFBAA02180	None	None	G4G5	S3S4	SSC
western bumble bee *Bombus occidentalis*	IIHYM24252	None	Candidate Endangered	G3	S1	
western lily *Lilium occidentale*	PMLIL1A0G0	Endangered	Endangered	G1G2	S1	1B.1
western pearlshell *Margaritifera falcata*	IMBIV27020	None	None	G4G5	S1S2	
western pond turtle *Emys marmorata*	ARAAD02030	None	None	G3G4	S3	SSC
western red bat *Lasiurus frantzii*	AMACC05080	None	None	G4	S3	SSC

Species	Element Code	Federal Status	State Status	Global Rank	State Rank	Rare Plant Rank/CDFW SSC or FP
western ridged mussel *Gonidea angulata*	IMBIV19010	None	None	G3	S1S2	
western sand-spurrey *Spergularia canadensis var. occidentalis*	PDCAR0W032	None	None	G5T4	S1	2B.1
western snowy plover *Charadrius nivosus nivosus*	ABNNB03031	Threatened	None	G3T3	S3	SSC
white-flowered rein orchid *Piperia candida*	PMORC1X050	None	None	G3?	S3	1B.2
Whitney's farewell-to-spring *Clarkia amoena ssp. whitneyi*	PDONA05025	None	None	G5T1	S1	1B.1
Yuma myotis *Myotis yumanensis*	AMACC01020	None	None	G5	S4	

Record Count: 106

This page left intentionally blank.

Appendix D. Mitigation Summary

This page left intentionally blank.

Memorandum

Making Conservation a California Way of Life

To: Julie Price
Environmental Scientist – Coordinator
North Region Environmental–District 01

Date: March 30, 2023
File: HUM 101 Drainage South
HUM-101 / 2.4-M53.9
01-0H640 / 0117000245

From: Tim Nelson
Environmental Scientist – Mitigation Specialist
North Region Environmental–District 01

SUBJECT: MITIGATION SUMMARY – HUM 101 Drainage South

The following Mitigation Summary is for the California Department of Transportation (Caltrans) for the purpose of offsetting impacts associated with HUM 101 Drainage South Project, 01-0H640 (hereinafter referred to as "project"). This Mitigation Summary addresses biological impacts associated with the project based on decisions made by the Project Development Team (PDT). The project would result in temporary and permanent impacts to sensitive habitats including riparian habitat regulated by the California Department of Fish and Wildlife (CDFW) and the North Coast Regional Water Quality Control Board (NCRWQCB); and Waters of the United States (U.S.)/State including Clean Water Act (CWA) wetlands and non-wetland waters regulated by the U.S. Army Corps of Engineers (USACE) and NCRWQCB.

PROJECT DESCRIPTION

The project proposes to rehabilitate drainage systems at 38 locations on US 101 in Humboldt County from Post Miles (PMs) 2.4 to M53.85. Most drainage systems would be rehabilitated by replacing culverts using the cut and cover method or jack and bore trenchless construction. There are no identified existing fish passage obstructions at any project locations. Proposed work includes replacement of culverts, downdrains, drainage inlets, headwalls, end walls, and retaining walls, and installation of rock slope protection and rock-lined ditch. Existing culverts would be replaced in-kind or upsized based on hydraulic conditions.

Work may include joint sealing, invert paving, culvert or drainage inlet repair using a Portland cement concrete material, regrading of drainage channels, repair of concrete or hot mix asphalt ditches or paved aprons, and stabilizing embankment using fill or RSP. Most culvert excavations would vary from approximately 2 to 20 feet in depth, with two locations requiring depths of up to 35 feet.

Dewatering and water diversion may be necessary at some locations if water is present at the beginning of construction. Vegetation clearing and grubbing, branch trimming, and/or removal of trees would be required for construction access and culvert replacement activities at some locations. Revegetation would be conducted within disturbed soil areas to replace vegetation removed and for soil stabilization and erosion control. Temporary erosion control would be provided to meet water quality requirements. The project would be constructed in conformance with a Stormwater Pollution Prevention Program.

Staging may occur on the paved roadway, and on paved and unpaved shoulders and pull-outs near work locations. Potential construction staging locations are identified at PMs 11.94, 14.28, 20.46, 20.70, 25.56, 25.77, 26.55, 26.78, 27.52, 28.02, 34.44, 35.96, 41.20, 40.70, 44.00, 46.67. Ramp and lane closures would be necessary at multiple locations to complete work. Most of the work would occur within the State right of way. Some locations would involve work within existing drainage easements. New permanent drainage easements and temporary construction easements (TCE) would be required at some locations (Caltrans 2023).

PROJECT IMPACTS

Impacts anticipated to occur as a result of the project include temporary and permanent impacts to Waters of the U.S./State and riparian habitats. Impacts on aquatic resources were considered temporary if fill would be removed following completion of construction and the temporarily disturbed portions of aquatic resources would be restored. Additional indirect temporary impacts caused by sedimentation or modification of hydrology could affect streams, wetlands, or riparian habitat. Temporary impacts to Waters of the U.S./State may result from construction of access roads, work areas, containment systems, clear water diversions, and excavation work for culvert placement. Permanent impacts to Waters of the U.S./State may result due to culvert realignment, repair of erosional features, RSP, and the extension of culvert systems (Caltrans 2022). Temporary project impacts are also anticipated for riparian habitats, though the full extent and nature of impacts are not known at this time.

Caltrans will mitigate permanent impacts to Waters of the State (wetlands) through the use of state wetland credits as outlined in the Cooperative Agreement for the HUM-36-Fen Parcel (2021) (hereinafter referred to as “Fen Parcel”) (APN 210-033-006). Caltrans will offset on-site all temporary and permanent impacts to non-wetland waters habitats directly from project activities (e.g., upsizing, shortening, and/or daylighting culverts), all temporarily impacted wetlands habitats, and all temporarily impacted riparian resources. A detailed description of the on-site Revegetation Plan will be available once the area of replanting is determined based on

final project design. Permanent impacts to wetland habitats will not be offset on-site; therefore, Caltrans will utilize state wetland credits available at the Fen Parcel. Table 1 below provides project impacts, on-site offsets and offsite mitigation acreage.

Table 1. Summary of HUM 101 Drainage South Impacts and Mitigation Needs

Jurisdictional Feature	Temporary Impacts (acres)	Permanent Impacts (acres)	Anticipated On-site Offsets (acres)	Anticipated Offsite Mitigation (acres)
Non-wetland waters	0.3980	0.0569	0.4549	N/A; Offsets to be completed on-site
Wetlands	0.1382	0.0134	0.1382	1.25-acres credit available at Fen Parcel
Riparian	0.2379	0.0000	0.2379	N/A; Offsets to be completed on-site
Project Impact Totals	**0.7741**	**0.0703**	**0.8310**	

Estimated offsets may be further refined following project scope refinement and additional discussions and negotiations with resource/regulatory agencies. The primary purpose of this document is to describe project mitigation intended to reduce permanent impacts to wetlands to a less than significant level as described in Section 2.4 [Biological Resources] of the CEQA Initial Study and Mitigated Negative Declaration, Checklist Question c). The secondary purpose of the document is to provide a summary of project activities that will be implemented to offset impacts to other aquatic resources. These measures include:

(1) On-site revegetation of riparian and wetland areas to achieve a success criteria of 100% replacement of all trees that were cut during construction,

(2) On-site restoration of Waters of the U.S./State including temporary and permanent impacts to non-wetland waters and temporary impacts to wetland habitats,

(3) Offsite mitigation for permanent impacts to wetlands via the use of state wetland credits as outlined in the Fen Parcel Cooperative Agreement agreed upon by the North Coast RWQCB (NCRWQCB), CDFW, and Caltrans on December 14, 2021. According to Recital 2.f. of the Cooperative Agreement, Caltrans may apply credits for 01-0H640, HUM 101 Drainage South, HUM 101 PM 0-54, with an estimated impact of 1.25 acres to wetlands.

Permanent impacts to Waters of the State (wetlands) from project activities are 0.0134 acre, significantly less than the estimated 1.25 acres of impacts listed in the Fen Parcel Cooperative Agreement.

ON-SITE OFFSETS

The following on-site activities to offset project impacts will include revegetation of riparian habitats and restoration of aquatic jurisdictional features at the project site.

On-Site Revegetation – Riparian Habitats

Within the proposed project footprint, all disturbed soil areas would be treated with erosion control consisting of a regionally appropriate seed mixture; seed would be locally sourced where possible. Additionally, Caltrans will implement on-site revegetation with appropriate native California plants in all disturbed soil areas of the project where feasible, however several constraints may limit these areas. On-site revegetation is feasible in Caltrans Right of Way (R/W) and where there is safe parking and access to the site during the planting, watering, and maintenance period. Riparian areas temporarily impacted by construction will be restored to pre-existing conditions once construction is complete. As applicable, depending on final design and impacts, riparian areas will be planted with riparian vegetation with the goal to shade any waters and to replace habitat. To offset impacts on-site, 100% of the number of riparian trees that were cut for construction will be replaced by living, installed, volunteer, and/or resprouting native woody plants.

Revegetation is typically performed under the guidance of Caltrans Revegetation Specialists, with work performed by the California Conservation Corps, a similar labor force, or an appropriate contractor. Planting commonly occurs one year after construction and is completed during the winter when the soil is wet from rain and the plants are dormant. This timing also allows any erosion-control seed to establish and allows microsite conditions to develop. Planting during dormancy decreases stress on the plants and gives them the best chance of survival. To protect genetic integrity, installed plantings are typically purchased through an outgrow contract of regionally appropriate stock or off-the-shelf if appropriate sourcing is available. Plants are typically caged to protect from herbivory, watered twice monthly during the first two dry seasons, mulched to suppress weeds and retain water, and weeded to decrease competition from non-native plants. Plant species are selected to replace habitat impacted by construction. Non-native plant species would be controlled in the revegetation areas to allow the plantings to establish. To the greatest extent feasible, Caltrans endeavors to eradicate any newly introduced

invasive species ranked as having High ecological impact by the California Invasive Plant Council (Cal-IPC)[1].

In summary, due to the customary project development process, designs are incomplete at this early stage; therefore, details of on-site revegetation are under development, including type, locations, and total area. Planting palettes and location details for proposed on-site revegetation will be specified in the Revegetation Plan, which will be submitted along with permit applications for agency review.

On-Site Waters of the U.S./State (Non-wetland waters and wetlands) Restoration

As a result of project activities, impacts to non-wetland waters and wetland habitats are both temporary and permanent and will be offset to the fullest extent possible on-site. Wetland and non-wetland waters areas temporarily impacted by construction will be restored to pre-existing conditions once construction is complete. If required, wetland areas will be planted/seeded with regionally appropriate native species. Anticipated permanent impacts to non-wetland waters will be offset on-site through credits achieved from project design (upsizing, shortening, and/or daylighting culverts); however, permanent impacts to wetlands are not anticipated to be offset on-site. As a result, Caltrans has identified and provided information below for a viable option to compensate for these future impacts, if deemed necessary.

[1] Cal-IPC (http://www.cal-ipc.org/): The Cal-IPC Inventory categorizes non-native invasive plants that threaten the state's wildlands. Categorization is based on the assessment of the ecological impacts of each species. The Inventory categorizes plants as High, Moderate, or Limited, reflecting the level of each species' negative ecological impact in California:

High: These species have severe ecological impacts on physical processes, plant and animal communities, and vegetation structure. Their reproductive biology and other attributes are conducive to moderate to high rates of dispersal and establishment. Most are widely distributed ecologically.

Moderate: These species have substantial and apparent—but generally not severe—ecological impacts on physical processes, plant and animal communities, and vegetation structure. Their reproductive biology and other attributes are conducive to moderate to high rates of dispersal, though establishment is generally dependent upon ecological disturbance. Ecological amplitude and distribution may range from limited to widespread.

Limited: These species are invasive but their ecological impacts are minor on a statewide level or there was not enough information to justify a higher score. Their reproductive biology and other attributes result in low to moderate rates of invasiveness. Ecological amplitude and distribution are generally limited, but these species may be locally persistent and problematic.

OFFSITE MITIGATION

Temporary and permanent project impacts to Waters of the State (wetlands) that cannot be fully offset at the project site have been mitigated at the Fen Parcel as described in the Fen Parcel Cooperative Agreement and approved by the resource and regulatory agencies. Off-site compensatory mitigation options include the use of state wetland credits from the Fen Parcel as described below.

State Wetlands Credits - Fen Parcel

To compensate for impacts to state wetlands at the project site, Caltrans will utilize fen credits at the Fen Parcel located along State Route (SR) 36, between the towns of Bridgeville and Dinsmore, within the Larabee Valley 7.5-minute U.S. Geological Survey quadrangle. The parcel is located in the Lower Eel River HUC 8 Watershed (18010105) and Lower Van Duzen River HUC 10 Watershed (1801010509). The Fen Parcel comprises 114-acres of upland forest surrounding and encompassing an ~5.11-acre sensitive fen. The Fen Parcel adjoins a 155.3-acre CDFW parcel (Robey/Burke Peatland, APN 210-033-002) that contains the majority of the fen (Figure 1). Acquisition of the Fen Parcel was completed in 2022 to add further protections from land development activities that highly threatened the fen's sensitive resources.

The Robey/Burke Peatland was acquired in 2017 by the Central Federal Lands Highway Division of the Federal Highway Administration (FHWA), in cooperation with Caltrans, as preservation and compensatory mitigation for proposed impacts to federal and state waters associated with a California SR 36 project (CDFW 2017). Similar to this acquisition, Caltrans once again worked with CDFW and NCRWQCB to acquire the 114-acre parcel for preservation and compensatory mitigation for eight programmed projects occurring in the Lower and South Fork Eel River watersheds. On August 26, 2019, Caltrans issued a proposal letter to CDFW and NCRWQCB that the Fen Parcel to be purchased in CDFW's name as a conservation strategy would satisfy wetland mitigation needs associated with multiple potential transportation projects located along SR 36 and US 101 within the Lower Eel River Watershed, including the Van Duzen Watershed and South Fork Eel Watershed. This acquisition would be used to mitigate for impacts resulting from eight future Caltrans projects including:

a. 01-0C500: Bridge Rail Replacement-3 Bridges, HUM 36, Hely Creek, Bridge No.4-92; Larabee Creek, Bridge No. 4-102; and Butte Creek Bridge No.4-116 with an estimated impact of 0.20 acre to wetlands;

b. 01-0F160: Carlotta Curve Improvement, HUM-36, PMs 10.5-10.8, with an estimated impact of 0.25 acre to wetlands;

c. 01-0A111: Eel River Bridge Seismic Retrofit, Bridge No.04-0016R, HUM 101 PM M53.9, with an estimated impact of 1.0 acre to wetlands;

d. Caltrans ID 20286: HUM-36, PMs 1-44.8, 35 culverts, with an estimated impact of 1.25 acre to wetlands;

e. **01-0H640**: Hum 101 Drainage South, HUM 101 PMs 0-54, 62 culverts with an estimated impact of 1.25 acre to wetlands;

f. 01-0J890: Carlotta Shoulder Widening, HUM 36 PMs 3-6, with an estimated impact of 0.5 acre to wetlands;

g. 01-0E010: Alton Shoulder Widening Project, HUM 36 PMs 0.1-1.65, with an estimated impact of 0.5 acre to wetlands; and

h. 01-0H241: HUM 254 Culverts, PMs 0.8-21, ten culverts with an estimated impact of 0.25 acres to wetlands.

CDFW issued a Concurrence Memorandum dated September 19, 2019, agreeing that the purchase of the Fen Parcel would mitigate for impacts to wetlands for the identified projects. Additionally, Caltrans can return to the Fen Parcel at a later date and enter into a future cooperative agreement with CDFW to complete additional activities for transportation-related mitigation. Similarly, NCRWQCB issued a concurrence letter dated October 7, 2019, also agreeing with Caltrans' proposal for wetland compensatory mitigation for the identified projects. A Cooperative Agreement was completed December 14, 2021, to purchase the Fen Parcel and provide additional endowment funds for the long-term management of the site. In April 2022, CDFW officially acquired the Fen Parcel and endowment funds were later transferred to an interest bearing account managed by the National Fish and Wildlife Foundation (NFWF). The estimated impacts to state wetlands for the identified projects equal approximately 5.20-acres, though this number may fluctuate as project designs are furthered refined. As stated in the Fen Parcel Cooperative Agreement, Caltrans, in coordination with the NCRWQCB and CDFW, may, as funds are programmed and allocated for these possible transportation projects, shift the wetland compensation values between each of the identified projects on the list, as long as the total does not exceed 5.20-acres of wetlands impact.



Figure 1. CDFW owned parcels associated with sensitive fen habitats along SR 36. APN 210-033-002 was purchased and transferred to CDFW in 2017 as compensatory mitigation for FHWA projects. APN 210-033-006 was purchased and transferred to CDFW in 2022 as compensatory mitigation for wetland impacts as a result of eight Caltrans projects.

REFERENCES

California Department of Fish and Wildlife (CDFW). 2017. Burke/Robey Peatland McClellan Mountain, Humboldt County, CA. Land Management Plan. Eureka, California.

California Department of Transportation (Caltrans). 2022. Natural Environment Study HUM 101 Drainage South Project. Eureka, California.

_____. 2023. Natural Environment Study Addendum for HUM 101 Drainage South Project. Eureka, California.

California Invasive Plant Council (Cal-IPC). 2022. *Cal-IPC Inventory.* Accessed on October 4, 2022, at https://www.cal-ipc.org/plants/inventory/

CDFW, North Coast Regional Water Quality Control Board (NCRWQCB), California Department of Transportation (Caltrans), National Fish and Wildlife Foundation (NFWF). 2021. Cooperative Agreement No. 01-0404 HUM-36 Fen Parcel.

This page left intentionally blank.

Appendix E. Wild and Scenic Rivers Determination with Concurrence

This page left intentionally blank

DEPARTMENT OF TRANSPORTATION

NORTH REGION ENVIRONMENTAL
1656 UNION STREET
EUREKA, CA 95501
(707) 298-1465
www.dot.ca.gov
TTY 711

Making Conservation a California Way of Life.

October 27, 2022

National Park Service
Attn: Stephen Bowes
333 Bush Street
San Francisco, CA 94014

RE: Request for Concurrence with Wild & Scenic River Determination for HUM-101 Drainage South Project (01-0H640)

Dear Mr. Bowes:

The California Department of Transportation (Caltrans) in District 1 proposes the HUM-101 Drainage South Project, a culvert rehabilitation project on United States Highway 101 (US 101) in Humboldt County, adjacent to the South Fork and main stem of the Eel River. The purpose of the project is to rehabilitate 40 drainage systems at 37 locations to good condition, as well as prevent potential roadway damage resulting from drainage system failures.

After reviewing the proposed project and evaluating the Wild and Scenic River status of the South Fork and main stem of the Eel River, Caltrans has determined the project would not alter the Recreational status of the river or its Outstanding Remarkable Values (ORVs).

Please review the enclosed memo and project information. If you concur with our findings, please sign and return the following page of this letter. If you have questions or need additional information, please contact me at **julie.price@dot.ca.gov** or (707) 362-5431.

Sincerely,

Julie Price

Julie Price
Environmental Scientist, Environmental Coordinator

Enclosure: Wild & Scenic Rivers Act Concurrence Memo

c: Julie East, Senior Environmental Scientist, E-1 Branch Chief
Amanda Chiachi, Sea Grant Fellow

Determination

Caltrans does not anticipate the project will have a permanent effect on water quality, the free-flowing characteristics of the Eel River, or its ORVs. The project will not alter the river's ability to meet the criteria that classify it as wild, scenic, or recreational.

Details of the proposed construction scenario are available for your review in the enclosed project description and layouts.

As a representative of the designated managing agency for these segments of the South Fork and main stem Eel River, if you concur please indicate by signing below that the project is consistent with the Wild and Scenic Rivers Act. Please return the signed copy of the letter and keep a copy for your records.

I concur that the above referenced project is consistent with the Wild and Scenic Rivers Act.

Stephen Bowes — 12/12/22

Stephen Bowes
National Park Service

Date

State of California
DEPARTMENT OF TRANSPORTATION

California State Transportation Agency

Memorandum

Making Conservation a California Way of Life

To: Julie Price
Environmental Coordinator
North Region Environmental-D01

Date: October 26, 2022

File: HUM-101 Drainage South
HUM-101 / PM 0.00 – 54.00
01-0H640 / 117000245

From: Amanda Chiachi
California Sea Grant State Fellow
North Region Environmental-D01

SUBJECT: HUM-101 DRAINAGE SOUTH (EA: 01-0H640) WILD & SCENIC RIVERS ACT CONCURRENCE

The California Department of Transportation (Caltrans) proposes a project in Humboldt County on United States Highway 101 (US 101) beginning at post mile (PM) 0.00 and ending at PM 54.00 adjacent to the South Fork and main stem of the Eel River. The project involves the replacement of 37 drainage systems within the Eel River watershed. A Draft CEQA Initial Study and Proposed Mitigated Negative Declaration (Draft Environmental Document or "DED") will be available for public review beginning in early November. It is the responsibility of Caltrans under both the Federal and State Wild and Scenic Rivers Act to receive concurrence from the appropriate river management agency that the proposed project will not have an adverse effect on the free-flowing characteristics of the river or have the potential to alter the river's ability to meet the criteria that classify it as wild, scenic, or recreational.

Purpose

The purpose of this project is to preserve the roadway and prevent damage from storm events by repairing failing drainage systems.

Need

The Culvert Inspection Program identified locations with drainage systems that have exceeded their design life and need repair. The project is necessary to repair failed and deteriorated drainage systems and prevent potential roadway damage resulting from drainage system failures.

PROJECT DESCRIPTION

The project proposes to rehabilitate 37 drainage systems on US 101 in Humboldt County from PM 0.00 to 54.00. Most drainage systems would be rehabilitated by replacing culverts using the cut and cover method or jack and bore trenchless construction[1]. If feasible, to improve fish passage, the box culvert at PM 0.88 may be replaced with a larger embedded box culvert, a precast bottomless arch culvert/bridge with engineered streambed material, or other similar option, as the existing culvert is a partial fish passage barrier. There are no identified existing fish passage obstructions at any of the other project locations. Proposed work includes replacement of culverts, downdrains (DD), drainage inlets (DI), headwalls, end walls, and retaining walls, and installation of rock slope protection (RSP) and rock-lined ditch. Existing culverts would be replaced in-kind or upsized based on hydraulic conditions. Refer to Table 1 for proposed work at each location.

Work may include joint sealing, invert paving, culvert or drainage inlet repair using a Portland cement concrete material, culvert slip lining including grouting and filling voids with a cement-like material or a similar product, regrading of drainage channels, repair of concrete or hot mix asphalt (HMA) ditches or paved aprons, and stabilizing embankment using fill or RSP. Most culvert excavations would vary from approximately 2 to 20 feet in depth, with two locations requiring depths of up to 35 feet.

Dewatering and water diversion may be necessary at some locations if water is present at the beginning of construction. Vegetation clearing and grubbing, branch trimming, and/or removal of trees would be required for construction access and culvert replacement activities at some locations. Revegetation would be conducted within disturbed soil areas to replace vegetation removed and for soil stabilization and erosion control. Temporary erosion control would be provided to meet water quality requirements. The project would be constructed in conformance with a water pollution plan/program.

Staging may occur on the paved roadway, and on paved and unpaved shoulders and pull-outs near work locations. Potential construction staging locations are identified at PMs 11.94, 14.28, 20.46, 20.70, 25.56, 25.77, 26.55, 26.78, 27.52, 28.02, 34.44, 35.96, 41.20, 40.70, 44.00, 46.67. Ramp and lane closures would be necessary at multiple locations to complete work. Most of the work would occur within the State right of way. Some locations would involve work within

[1] The cut and cover method would involve cutting and removing the original pavement and soil above the culvert, removing the old pipe, placing a new pipe, then covering the trench and paving to match the existing road level. The jack and bore trenchless method would involve decommissioning the old pipe by filling with concrete and then installing a new pipe using a machine to bore through the ground and push a new pipe into place.

existing drainage easements. New permanent drainage easements and temporary construction easements (TCE) would be required at some locations. Refer to the attached project layout sheets for the scope and limits of proposed work. Table 1 summarizes the proposed work at each drainage system location.

Table 1. Proposed Work at Drainage System Locations

	Post Mile	Method	Proposed Work
1	0.88	Cut & Cover	Remove four alders (three 16″ diameter at breast height [dbh] trees and one 18″-dbh tree) and existing 8′-wide x 6′-high x 80′-long box culvert. Install new 14′-wide x 10.5′-high x 73′-long precast concrete bottomless box culvert. Install new headwalls at inlet and outlet to conform to existing embankments. Install streambed material ±30′ upstream of inlet and ±20′ downstream of outlet. Clear water diversion and dewatering required. Another potential option is a precast bottomless arched culvert in the same dimensions as the previously stated bottomless box culvert.
2	2.40	Cut & Cover	Remove existing 36″-diameter x 12′-long corrugated steel pipe (CSP), 36″-diameter x 45′-long CSP, 36″-diameter x 50′-long CSP DD (downdrain), rock energy dissipator (RED), existing concrete slab beneath the RED, and ±24″-dbh tan oak tree. Abandon 36″-diameter x 60′-long CSP. Install wingwall, base rock at inlet, 36″-diameter x 67.5′-long alternative pipe culvert (APC), 36″-diameter x 17′-long CSP DD, manhole, 36″- diameter x 22′-long APC, two elbows, 36″-diameter x 36′-long CSP DD, flexible lined channel, and rock slope protection (RSP). Place hot mix asphalt (HMA) and aggregate base in various areas.
3	7.51	Cut & Cover	Remove 42″-diameter x 30′-long CSP, drainage inlet (DI), 12″-diameter x 8′-long CSP, 42″-diameter x 20′-long CSP, and 12″-diameter x 8′-long CSP (standpipe). Abandon 12″-diameter x 15′-long CSP (standpipe) and 42″-diameter x 425′-long CSP. Replenish existing RSP. Install 42″-diameter x 45′-long CSP DD two elbows, two cable anchorage systems, 42″-diameter x 60′-long APC, DI, 42″-diameter x 45′-long CSP DD, 42″-diameter x 315′-long APC, and steel flared end section (SFES). Place minor concrete to repair concrete-lined ditch (in-kind). Engineering shoring plan required for deep cut.

	Post Mile	Method	Proposed Work
4	13.39	Cut & Cover	Remove inlet, two 18″-diameter x 30′-long CSP, 18″-diameter x 18′-long DD. Abandon 18″-diameter x 67.5′-long CSP. Install Type G1 DI, 24″-diameter x 107′-long APC, cable anchorage system, 24″-diameter x 25′-long CSP DD, 24″-diameter x 17′-long CSP DD, and two elbows.
5	15.64	Cut & Cover	Remove 42″-diameter x 200′-long CSP. Install rock-lined ditch, headwall and 54″-diameter x 200′-long APC. May need dewatering.
6	16.09	Cut & Cover	Remove 30″-diameter x 120′-long CSP and inlet. Install 8′-tall x 24′-long Type 1 retaining wall, Type G1 DI, and 42″-diameter x 120′-long APC. Replenish existing RSP.
7	16.44	Cut & Cover	Remove 24″-diameter x 93′-long CSP, inlet, and concrete-lined ditch. Install rock-lined ditch, Type G1 DI, 48″-diameter x 93′-long APC, headwall. Replenish existing RSP.
8	17.54	Cut & Cover	Remove two 30″-diameter x 35′-long CSP, 18″-diameter x 173′-long CSP DD, inlet. Abandon 30″-diameter x 148′-long CSP. Install three elbows, 24″-diameter x 173′-long CSP DD, 24″-diameter SFES, 36″-diameter x 77′-long CSP DD, two cable anchorage systems, 36″-diameter x 140′-long APC, Type G1 DI, and embankment around new SFES. May need dewatering.
9A	17.76	Cut & Cover	Remove 18″-diameter x 240′-long CSP, inlet, 18″-diameter x 60′-long CSP, and SFES. Install two G1 DI, 24″-diameter x 61′-long APC, 24″-diameter x 82′-long APC, elbow, and 24″-diameter x 27′-long APC. Install concrete-lined swale to connect to existing concrete-lined ditch.
9B	17.76	Cut & Cover	Remove 18″-diameter x 50′-long CSP DD, two inlets, 36″-diameter x 215′-long CSP, and 18″-diameter x 190′-long CSP. Install 24″-diameter SFES, cable anchorage system, 24″-diameter x 50′-long CSP DD, three G1 DIs, 36″-diameter x 110′-long CSP, 36″-diameter x 89′-long APC, 24″-diameter x 150′-long APC, manhole, and 24″-diameter x 40′-long APC. Also includes embankment work, invert paving at the outlet, and ditch excavation near the inlet.

	Post Mile	Method	Proposed Work
10	18.25	Cut & Cover	Remove 24″-diameter x 270′-long CSP DD, 24″-diameter x 75′-long CSP, inlet, and 24″-diameter x 92′-long CSP DD. Install three elbows, 24″-diameter x 270′-long CSP DD, G1 DI, 24″-diameter x 75′-long APC, cable anchorage system, 24″-diameter x 92′-long CSP DD, RSP, SFES and embankment. May need dewatering.
11	19.43	Liner or Trench-less	Alternative #1: Remove SFES. Install SFES, 30″-diameter x 411′-long pipe liner, and rock-lined ditch. Alternative #2: Replace existing 30″-diameter x 411′-long CSP with 42″-diameter x 391′-long APC and SFES. Reduce system length by daylighting up to 20′ of culvert with rock-lined ditch. Install RSP at the outlet.
12	20.63	Cut & Cover	Remove 18″-diameter x 16′-long CSP, SFES, inlet, and 18″-diameter x 91′-long CSP. Install rock-lined ditch, straight headwall, and 42″-diameter x 91′-long APC.
13	23.46	Cut & Cover	Remove 24″-diameter x 16′-long CSP, two 24″-diameter x 25′-long CSP, inlet. Abandon 24″-diameter x 61′-long CSP. Install rock-lined ditch, Type G1 DI, cable anchorage system, 24″-diameter x 45′-long CSP DD, two elbows, and 24″-diameter x 68′-long APC.
14	26.16	Cut & Cover	Remove inlet, 30″-diameter x 12′-long CSP DD, and 30″-diameter x 87′-long CSP. Potentially remove one 14″-dbh bay tree. Install expanded Type G2 DI, cable anchorage system, 36″-diameter x 12′-long CSP DD, and 36″-diameter x 87′-long APC, elbow. Repair existing concrete RSP.
15	26.78	Cut & Cover	Remove one ≤10″-dbh redwood tree, inlet, 24″-diameter x 96′-long CSP, 24″-diameter x 73′-long CSP DD. Install Type G1 DI, four elbows, cable anchorage system, 24″-diameter x 73′-long CSP DD, 24″-diameter x 94′-long APC. Replenish existing RSP.
16	27.52	Cut & Cover	Remove inlet, 18″-diameter x 49′-long CSP DD, and 18″-diameter x 89′-long CSP. Install G1 DI, two elbows, cable anchorage system, 24″-diameter x 49′-long CSP DD, and 24″-diameter x 89′-long APC.
17	33.23	Cut & Cover	Remove inlet, 18″-diameter x 105′-long CSP, and 42″-diameter x 72′-long reinforced concrete pipe (RCP). Install two Type G1 DI, 24″-diameter x 105′-long APC, 48″-diameter x 72′-long APC, and a straight headwall. May need dewatering and clear water diversion.

	Post Mile	Method	Proposed Work
18	34.77	Cut & Cover	Remove one 22″-dbh Douglas fir tree, one 17″-dbh redwood tree, 24″-diameter x 32′-long CSP DD, inlet, 18″-diameter x 80′-long CSP DD, 12″-diameter x 386′-long CSP DD, and 24″-diameter x 90′-long CSP. Install new RSP, 24″-diameter x 7′-long APC, 24″-diameter x 25′-long APC, two cable anchorage systems, G1 DI, 8″-diameter underdrain, 24″-diameter x 25′-long APC, six elbows, 24″-diameter x 41′-long APC, 24″-diameter x 9′-long APC, 24″-diameter SFES, 24″-diameter x 4.5′-long APC, 24″-diameter x 64′-long APC, 24″-diameter x 130′-long APC, 24″-diameter x 183′-long CSP, 24″-diameter SFES, and 24″-diameter x 90′-long APC. May need dewatering and clear water diversion.
19	35.00	Cut & Cover	Remove three redwood trees (7″, 14″ and 23″-dbh), 24″-diameter x 85′-long CSP, inlet, 24″-diameter x 238′-long CSP DD, 24″-diameter x 88′-long CSP, and two SFES. Install two elbows, 24″-diameter x 85′-long APC, Type G1 DI, cable anchorage system, 24″-diameter tee, 24″-diameter x 88′-long APC, and two SFES.
20	37.64	Cut & Cover and Trench-less	Remove one 16″-dbh Douglas-fir tree, two 30″-diameter x 10′-long CSP, 18″-diameter x 60′-long CSP, 18″-diameter x 68′-long CSP, 12″-diameter x 54′-long CSP DD, and 30″-diameter x 55′-long CSP DD. Abandon 30″-diameter x 152′-long CSP. Install 24″-diameter x 60′-long APC, wingwall, 24″-diameter x 68′-long CSP, 60″-diameter x 151′-long welded steel pipe (WSP), elbow, and 36″-diameter x 70′-long CSP DD. Repair eroded area at inlet. Replenish existing RSP. May need clear water diversion.
21	39.01	Trench-less	Remove one 10″-dbh redwood tree, 24″-diameter x 20′-long CSP, and 24″-diameter x 140′-long CSP. Abandon 24″-diameter x 202′-long CSP. Install 24″-diameter SFES, 60″-diameter x 165′-long APC, four elbows, cable anchorage assembly system, 24″-diameter anchor assembly, 24″-diameter x 65′-long CSP DD, and 24″-diameter x 120′-long CSP DD.
22	39.23	Cut & Cover	Remove 30″-diameter x 43′-long CSP, 24″-diameter x 14′-long CSP, and DI. Install rock-lined ditch, wingwall, 36″-diameter x 50′-long APC, and miscellaneous HMA. Excavate ditch to connect to adjusted inlet.

	Post Mile	Method	Proposed Work
23	39.65	Trench-less	Remove one 12″-dbh Oregon ash tree, 30″-diameter x 73′-long CSP, inlet, 30″-diameter x 20′-long CSP, and 30″-diameter x 15′-long CSP. Abandon 30″-diameter x 230′-long CSP. Perform roadway excavation. Install wingwall, 36″-diameter x 265′-long WSP, DI, 36″-diameter x 75′-long APC, rock-lined ditch, and embankment. Replace overside drain. May need dewatering and clear water diversion.
24	40.38	Cut & Cover	Remove two inlets, 18″-diameter x 65′-long CSP, 18″-diameter x 47′-long CSP, and 18″-diameter x 160′-long CSP. Install two Type G1 DI, 24″-diameter x 65′-long APC, 24″-diameter x 25′-long APC, elbow, and 24″-diameter x 185′-long APC. Replace dike in-kind. Replenish existing RSP.
25	41.45	Cut & Cover	Remove 18″-diameter x 68′-long CSP DD, 12″-diameter x 20′-long high-density polyethylene (HDPE) pipe, buried junction box, and 18″-diameter x 70′-long CSP. Install straight headwall, 24″-diameter x 93′-long APC, two elbows, 24″-diameter x 65′-long CSP DD, RSP, and Type G1 DI.
26	41.69	Cut & Cover	Remove inlet, existing metal and concrete post anchors, 18″-diameter x 134′-long CSP, 18″-diameter x 78′-long CSP, 18″-diameter x 10′-long CSP, and SFES. Install two elbows, DI, two 8″-diameter underdrains ±3.7′ and ±4.3′ below the surface on the north and south sides of the DI, RSP, 24″-diameter x 134′-long APC, 24″-diameter x 78′-long CSP DD, 24″-diameter x 10′-long CSP DD, and SFES. Rebuild embankment.
27	42.12	Cut & Cover	Remove inlet, 24″-diameter x 52′-long CSP DD, and 24″-diameter x 108′-long CSP. Excavate ditch. Install cable anchorage system, elbow, Type G1 DI, 24″-diameter x 130′-long APC, and 24″-diameter x 50′-long CSP DD.
28	42.34	Cut & Cover	Remove several ≤6″-dbh redwood trees to access the inlet point. Repair concrete headwall and invert paving at existing 4.5′-wide x 5.2′-tall x 264′-long elliptical CSP. Install minor concrete to reduce pooling at the inlet. May need dewatering and clear water diversion.
29	43.17	Cut & Cover	Remove headwall, inlet, 24″-diameter x 45′-long CSP, and 24″-diameter x 18′-long CSP. Abandon 24″-diameter x 90′-long CSP. Install wingwall, elbow, 36″-diameter x 20′-long CSP DD, RSP, 36″-diameter x 132′-long APC, and Type GO DI.

	Post Mile	Method	Proposed Work
30	43.35/ 43.37	Cut & Cover	Remove two SFES, 18″-diameter x 75′-long CSP and 18″-diameter x 92′-long CSP. Install two SFES, 24″-diameter x 76′-long APC, 24″-diameter x 92′-long APC, and elbow.
31	43.54	Trench-less	Remove one ≤8″-dbh tree and two 18″-diameter x 15′-long CSP. Abandon 18″-diameter x 159′-long CSP. Install 42″-diameter x 185′-long WSP.
32	44.17	Cut & Cover	Remove 36″-diameter x 70′-long CSP, 36″-diameter x 83′-long CSP, and inlet. Replace SFES and install embankment around new SFES. Install 42″-diameter x 65′-long APC, 42″-diameter x 83′-long APC, and Type G1 DI.
33	45.25	Cut & Cover	Remove 18″-diameter x 44′-long CSP, two inlets, and 18″-diameter x 78′-long CSP. Install 24″-diameter x 44′-long APC, 24″-diameter x 78′-long APC, and two Type G1 DI. Replenish existing RSP.
34	47.01	Trench-less	Remove nine trees (12″ and 16″-dbh alders, 8″, 10″, 10″, 21″ and 16″-dbh redwoods, and two 15″-dbh maples), SFES, 54″-diameter x 15′-long CSP and 54″-diameter x 100′-long CSP. Abandon 54″-diameter x 290′-long CSP. Install temporary landing pad, elbow, cable anchorage system, 60″-diameter x 136′-long CSP DD, G2 DI, 60″-diameter x 75′-long APC, and 60″-diameter x 180′-long WSP. Repair existing concrete RSP and eroded area at inlet. Excavate ditch. Anticipate a clear water diversion.
35	49.86	-	Abandon 24″ x 110′ CSP. Repair eroded area at inlet to raise the flowline to access the proper existing culvert.
36A	52.49	Cut & Cover	Remove two inlets and 18″-diameter x 118′-long CSP. Install two G1 DI, 24″-diameter x 118′-long APC. Excavate ditch.
36B	52.92	Cut & Cover	Remove two junction boxes, 60″-diameter x 365′-long CSP, inlet, and 18″-diameter x 25′-foot CSP. Install two junction boxes, 60″-diameter x 365′-long APC, DI, and 24″-diameter x 25′-long APC.

	Post Mile	Method	Proposed Work
37	53.85	Cut & Cover	Remove two inlets, junction box, 18″-diameter x 80′-long CSP, 24″-diameter x 357′-long RCP, concrete flared end section (FES), 18″-diameter x 54′-long CSP. Install two Type G1 DI, junction box, 24″-diameter x 80′-long APC, 24″-diameter x 357′-long APC, SFES, 24″-diameter x 54′-long APC. Excavate ditch.

WILD AND SCENIC RIVER DESCRIPTION[2]

The South Fork Eel River and main stem of the Eel River are designated under the National Wild and Scenic River System and the California Wild and Scenic River System. Stream reaches within the project area have been classified as "Recreational" under the Wild and Scenic Rivers Act and are administered by the National Park Service.

"Recreational rivers" are defined in the Public Resources Code (PRC) as being *"those rivers or segments of river that are readily accessible by road or railroad, that may have some development along their shorelines, and that may have undergone some impoundment or diversion in the past."*

The "Recreational" classification allows for the utilization of river resources so long as the Outstandingly Remarkable Values (ORV) qualifying the river for designation are protected. The ORV of the Eel River system are Fisheries and Recreational. The primary fish of interest for the Eel River system include steelhead, Chinook, coho, and coastal cutthroat trout. In normal years, Chinook begin arriving in August and remain until rains allow them upstream. The run continues through December, with the peak in late October. The Eel River water, fish, and ecosystem have faced development challenges, and sections of the river are closed to fishing to protect the juvenile steelhead.

For Recreation, Dos Rios, located at the confluence of the Middle Fork of the Eel River and the mainstem in Mendocino County, is the put-in for a popular four-day trip through the Eel River Canyon to Alderpoint. A number of trails access the river, and the highest public use is by summer swimmers downstream near the Eel River Work Center and Eel River Campground. The

[2] www.rivers.gov/california.php

project is not located near these specific recreational areas, but recreation does occur near some of the project locations.

IMPACT EVALUATION

Minor vegetation removal, habitat modification, clear water diversion, fish relocation, noise, visual disturbance, and water quality impacts could temporarily affect salmonids and their designated habitats. As analyzed in Sections 2.4 and 2.16 of the DED, Caltrans has determined the project would have "No Impact" on recreation and would have a "Less than Significant Impact" on salmonids and their habitat due to the scope and duration of the project and the incorporation of Caltrans specifications and Standard Measures and Best Management Practices to protect fish habitat and water quality. Impacts would be temporary and short-term, with construction taking approximately 5 to 20 days at each location, except for the location on Hartsook Creek at PM 0.88 which may take around 90 days.

The project would comply with the Provisions of the Caltrans Statewide National Pollutant Discharge Elimination System (NPDES) Permit and the Construction General Permit. Before any ground-disturbing activities, the contractor would prepare a water pollution plan/program that includes erosion control measures and construction waste containment measures to protect Waters of the U.S./State during project construction. Most of the culvert locations would be dry during construction, and some would require dewatering and/or clear water diversions. The contractor would be required to prepare and submit a Construction Site Temporary Clear Water Diversion System Plan to Caltrans for authorization prior to any clear water diversion. If any of the locations convey flowing water during construction, temporary water diversions would comply with standard Best Management Practices (BMPs) to protect water quality throughout the duration of the project. Rock energy dissipators would be deployed at the outlets of culverts as needed and an erosion control plan and a revegetation plan would be implemented to protect exposed soils due to construction activities, and to further protect water quality.

The project would also require a NPDES permit and 401 certification from the North Coast Regional Water Quality Control Board (NCRWQCB), Lake or Streambed Alteration Agreement from the California Department of Fish & Wildlife (CDFW), 404 certification from the U.S. Army Corps of Engineers, and compliance with the *Programmatic Authorization for Caltrans' Routine Maintenance and Repair Activities in Districts 1, 2, and 3* in consultation with National Marine Fisheries Service (NMFS). Mitigation and monitoring of revegetation efforts would be performed pursuant to a 401 certification with the NCRWQCB.

DETERMINATION

Given the above, Caltrans does not anticipate the project would have a permanent effect on water quality, fish habitat, the free-flowing characteristics of the river, or its ORVs. By improving the drainage systems, Caltrans anticipates an overall benefit to water quality downstream of these systems. The project would not alter the river's ability to meet the criteria that classify it as recreational.

If you have questions or need additional information, please contact me at **Amanda.Chiachi@dot.ca.gov** or (707) 382-7248.

Sincerely,

Amanda Chiachi
California Sea Grant State Fellow
Caltrans, District 1
North Region Environmental

Attachments: Vicinity Map
Project Layout Sheets

VICINITY MAP

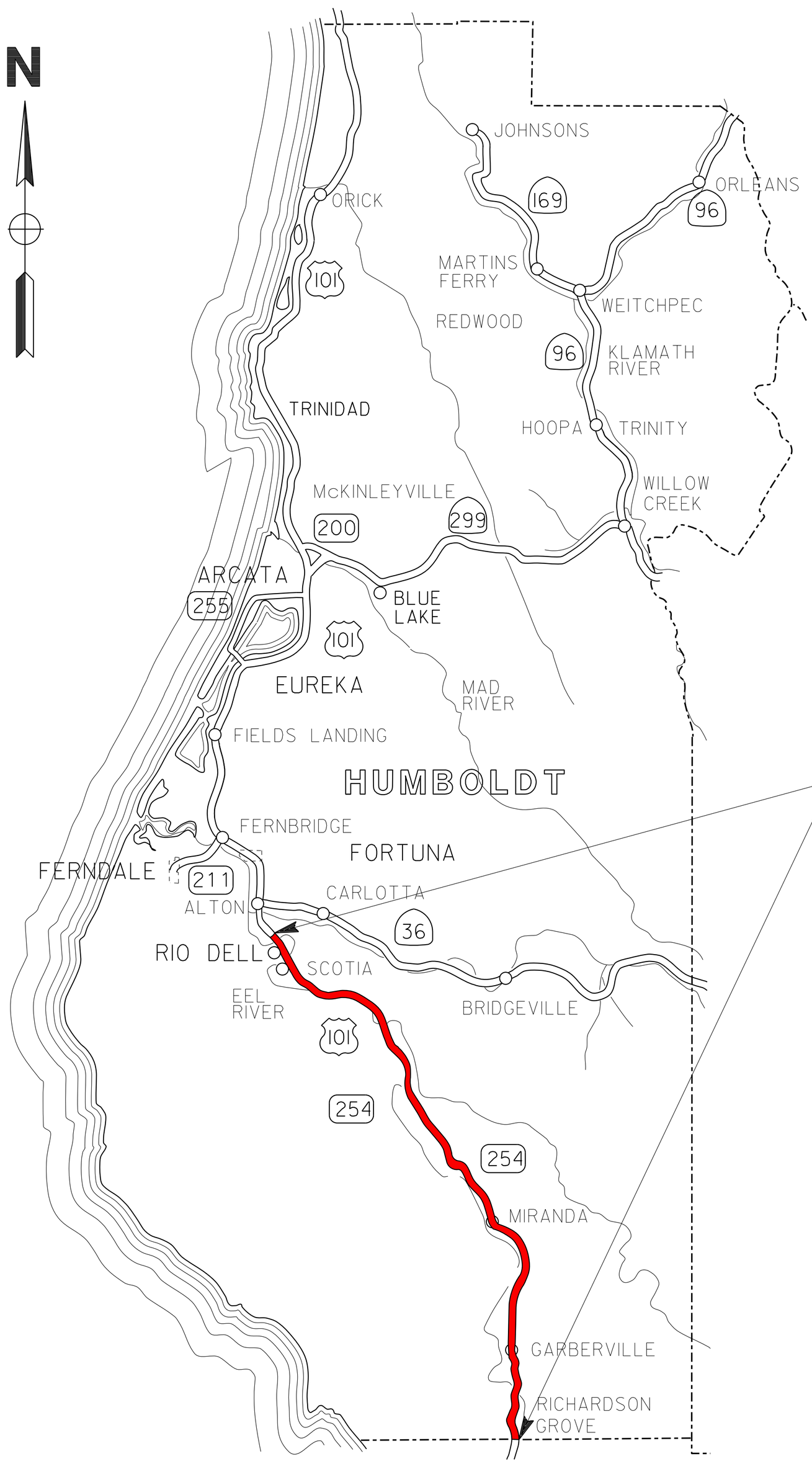

PROJECT LOCATION

HUM 101 PM T0.00/M54.00

HUM-101 Drainage South

01-HUM-101 (T0.00/ M54.00)

EA 01-0H640

EFIS 01 1700 02459

No Scale

INDEX OF PLANS

STATE OF CALIFORNIA

DEPARTMENT OF TRANSPORTATION

PROJECT PLANS FOR CONSTRUCTION ON

STATE HIGHWAY

IN HUMBOLDT COUNTY AT VARIOUS LOCATIONS FROM MENDOCINO COUNTY BORDER TO EEL RIVER BRIDGE #04-16R

TO BE SUPPLEMENTED BY STANDARD PLANS DATED 2018

Dist	COUNTY	ROUTE	POST MILES TOTAL PROJECT	SHEET No.	TOTAL SHEETS
01	HUM	101	0.00-54.00	1	78



LOCATION MAP

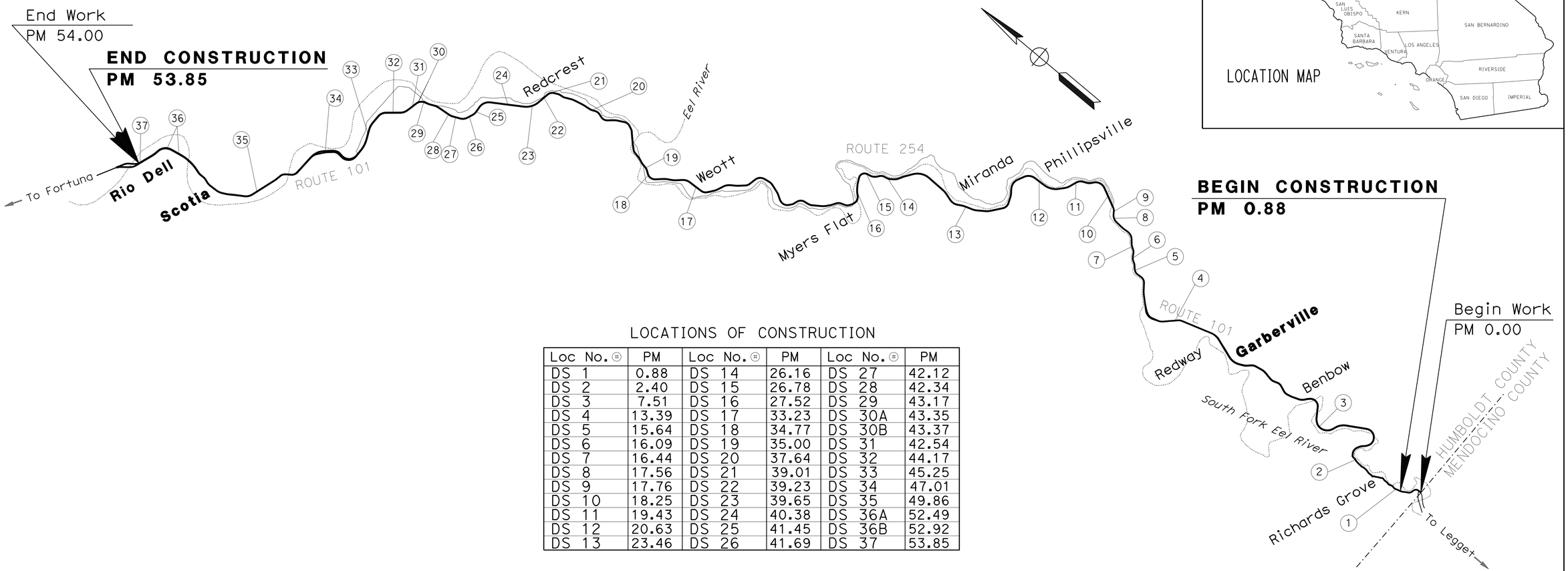

LOCATIONS OF CONSTRUCTION

Loc No.	PM	Loc No.	PM	Loc No.	PM
DS 1	0.88	DS 14	26.16	DS 27	42.12
DS 2	2.40	DS 15	26.78	DS 28	42.34
DS 3	7.51	DS 16	27.52	DS 29	43.17
DS 4	13.39	DS 17	33.23	DS 30A	43.35
DS 5	15.64	DS 18	34.77	DS 30B	43.37
DS 6	16.09	DS 19	35.00	DS 31	42.54
DS 7	16.44	DS 20	37.64	DS 32	44.17
DS 8	17.56	DS 21	39.01	DS 33	45.25
DS 9	17.76	DS 22	39.23	DS 34	47.01
DS 10	18.25	DS 23	39.65	DS 35	49.86
DS 11	19.43	DS 24	40.38	DS 36A	52.49
DS 12	20.63	DS 25	41.45	DS 36B	52.92
DS 13	23.46	DS 26	41.69	DS 37	53.85

NO SCALE

PROJECT ENGINEER
REGISTERED CIVIL ENGINEER

DATE

PLANS APPROVAL DATE

THE STATE OF CALIFORNIA OR ITS OFFICERS OR AGENTS SHALL NOT BE RESPONSIBLE FOR THE ACCURACY OR COMPLETENESS OF SCANNED COPIES OF THIS PLAN SHEET.

REGISTERED PROFESSIONAL ENGINEER — No. — Exp. CIVIL — STATE OF CALIFORNIA

PROJECT MANAGER NAME

DESIGN ENGINEER NAME

THE CONTRACTOR SHALL POSSESS THE CLASS (OR CLASSES) OF LICENSE AS SPECIFIED IN THE "NOTICE TO BIDDERS."

CONTRACT No.	01-0H6401
PROJECT ID	0117000245

LAST REVISION 00-00-00

DATE PLOTTED => 26-OCT-2022
TIME PLOTTED => 13:47

Dist	COUNTY	LOCATION CODE	POST MILES TOTAL PROJECT	SHEET No.	TOTAL SHEETS
01	HUM	101			78

REGISTERED CIVIL ENGINEER DATE

PLANS APPROVAL DATE

THE STATE OF CALIFORNIA, ITS OFFICERS OR AGENTS SHALL NOT BE RESPONSIBLE FOR THE ACCURACY OR COMPLETENESS OF SCANNED IMAGES OF THIS PLAN SHEET.

REGISTERED PROFESSIONAL ENGINEER No. Exp. CIVIL STATE OF CALIFORNIA

PRELIMINARY DESIGN ONLY FOR REVIEW

NOTE:

TCE WILL BE ACQUIRED FOR ADJACENT PROPERTIES, APN: 033-281-015 AND APN: 033-271-001.

CENTERLINE ALIGNMENT "A" USED FOR STATION CALLOUTS.

SAME FOOTING USED FOR CULVERT, STRAIGHT HEADWALL, AND WINGWALL.

STREAMBED MATERIAL IS PLACED BETWEEN CULVERT'S FOOTING.

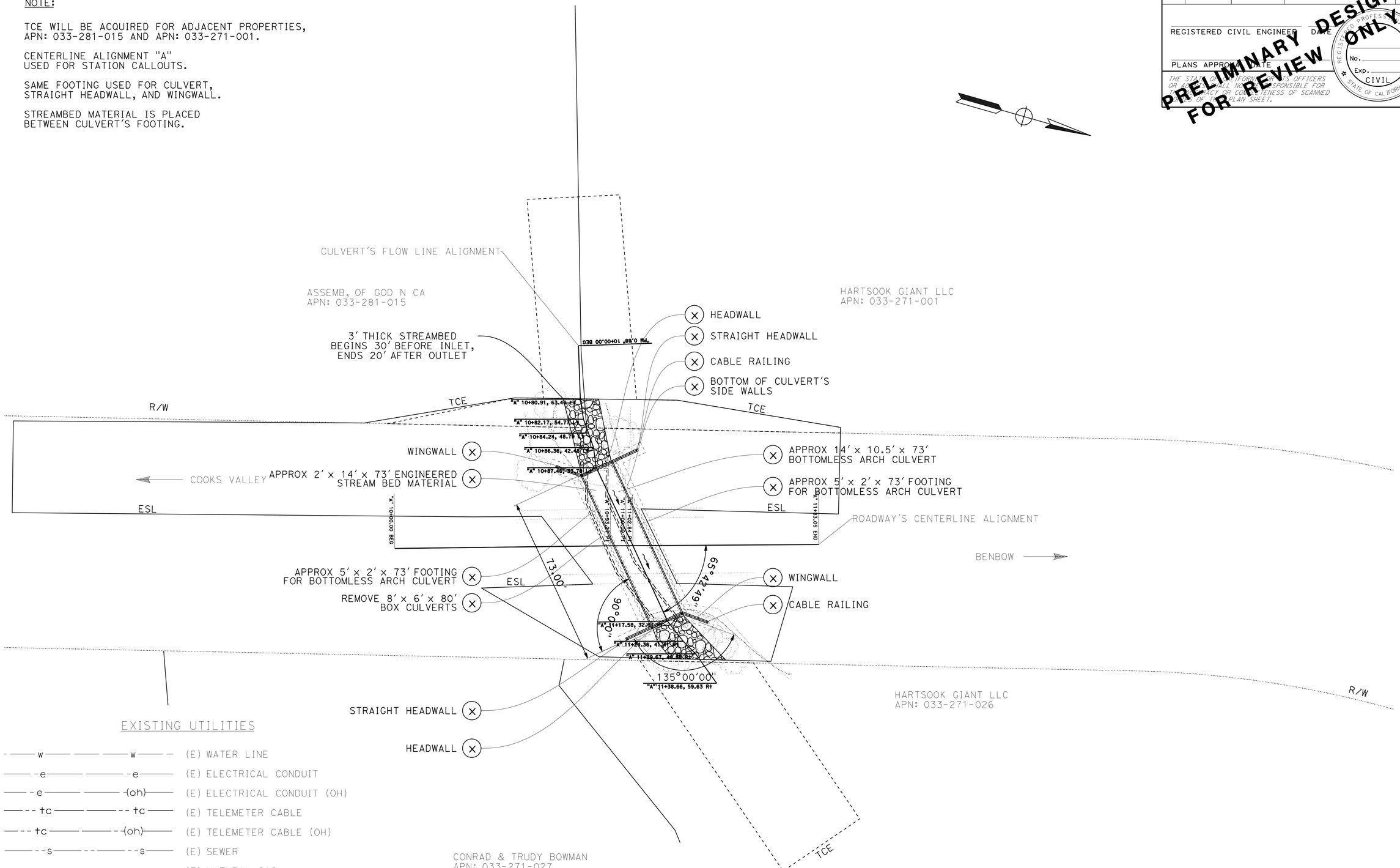

1 DRAINAGE SYSTEM No. 1
PM 0.88

EXISTING UTILITIES

- (E) WATER LINE
- (E) ELECTRICAL CONDUIT
- (E) ELECTRICAL CONDUIT (OH)
- (E) TELEMETER CABLE
- (E) TELEMETER CABLE (OH)
- (E) SEWER
- (E) NATURAL GAS
- (E) FIBER OPTIC CABLE

DRAINAGE LAYOUT

SCALE: 1" = 20'

D-1

CALCULATED-DESIGNED BY

CHECKED BY

Daniel Anderson

REVISED BY

DATE REVISED

FUNCTIONAL SUPERVISOR

Matt Smith

STATE OF CALIFORNIA - DEPARTMENT OF TRANSPORTATION

Caltrans

LAST REVISION DATE PLOTTED => 26-OCT-2022
10-26-22 TIME PLOTTED => 13:47

BORDER LAST REVISED 8/5/2020

USERNAME =>
DGN FILE => 01170000245ia000_PM 0.88.dgn

RELATIVE BORDER SCALE IS IN INCHES 0 1 2 3

UNIT 0312

PROJECT NUMBER & PHASE 01160000351

Dist	COUNTY	LOCATION CODE	POST MILES TOTAL PROJECT	SHEET No.	TOTAL SHEETS
01	HUM	101			78

REGISTERED CIVIL ENGINEER DATE

PLANS APPROVAL DATE

THE STATE OF CALIFORNIA, ITS OFFICERS OR AGENTS SHALL NOT BE RESPONSIBLE FOR THE ACCURACY OR COMPLETENESS OF SCANNED COPIES OF THIS PLAN SHEET.

REGISTERED PROFESSIONAL ENGINEER No. Exp. CIVIL STATE OF CALIFORNIA

PRELIMINARY DESIGN ONLY FOR REVIEW

NOTE:

ELBOW ANGLE IS APPROXIMATE, FIELD VERIFY PRIOR TO PROCUREMENT.

POTENTIALLY A PERMEANT DRAINAGE EASEMENT WILL NEED TO BE ACQUIRED

PREDICTED DSA CALCULATED BY ENGINEER SERVES AS SUGGESTION AND IS PRONE TO CHANGE DURING CONSTRUCTION

PDE: PROPOSED PERMANENT DRAINAGE EASAMENT

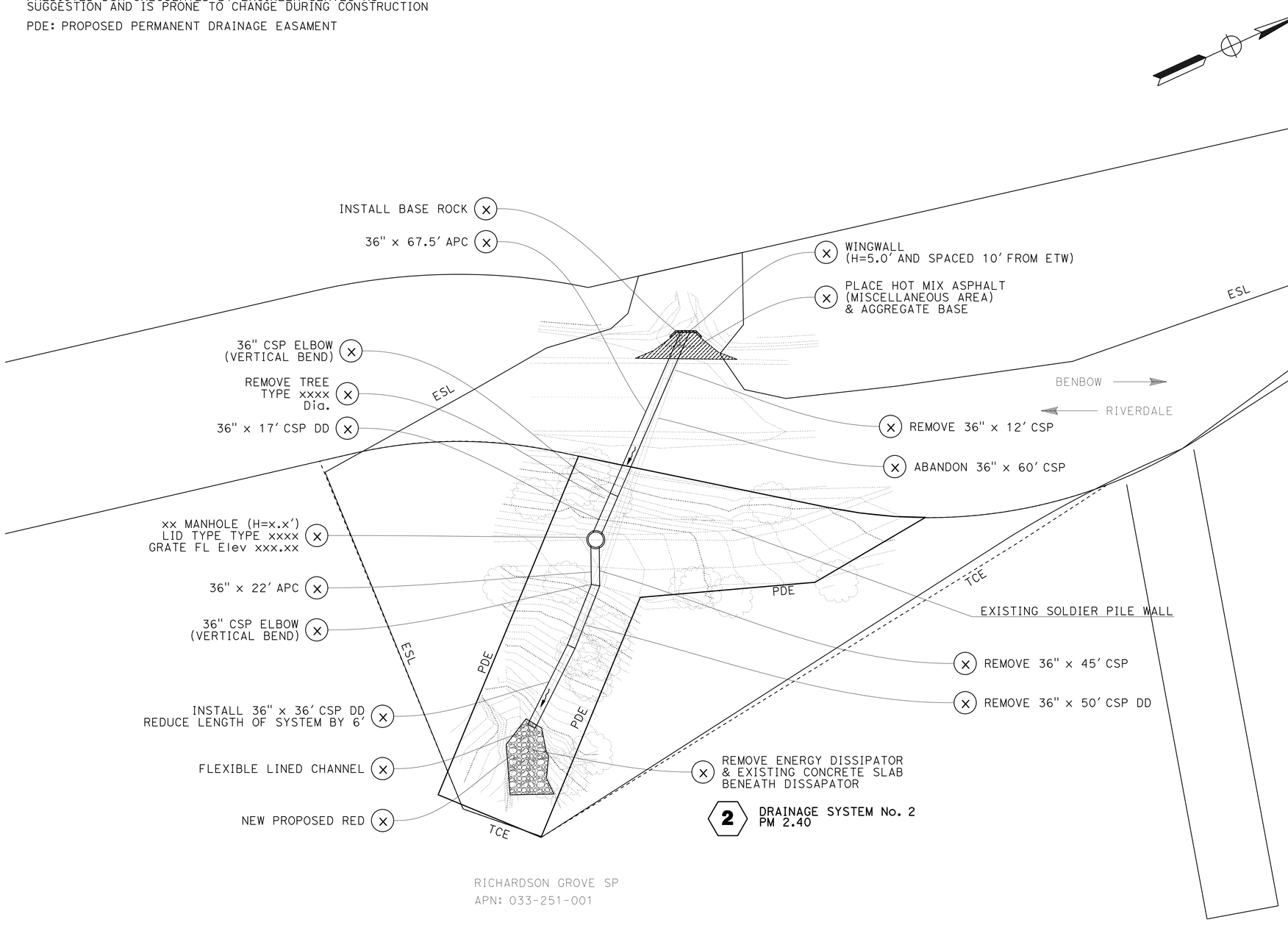

RICHARDSON GROVE SP
APN: 033-251-001

DRAINAGE LAYOUT

SCALE: 1" = 20'

D-2

STATE OF CALIFORNIA - DEPARTMENT OF TRANSPORTATION

Caltrans

FUNCTIONAL SUPERVISOR: Matt Smith

CALCULATED-DESIGNED BY: Daniel Anderson

CHECKED BY

REVISED BY | DATE REVISED

LAST REVISION | DATE PLOTTED => 26-OCT-2022 | TIME PLOTTED => 13:47 | 10-26-22

BORDER LAST REVISED 8/5/2020

USERNAME =>
DGN FILE => 01170002451a000_PM 2.40.dgn

RELATIVE BORDER SCALE IS IN INCHES 0 1 2 3

UNIT 0312

PROJECT NUMBER & PHASE 01160000351

Dist	COUNTY	LOCATION CODE	POST MILES TOTAL PROJECT	SHEET No.	TOTAL SHEETS
01	HUM	101			78

REGISTERED CIVIL ENGINEER DATE

PLANS APPROVAL DATE

THE STATE OF CALIFORNIA, ITS OFFICERS OR AGENTS SHALL NOT BE RESPONSIBLE FOR THE ACCURACY OR COMPLETENESS OF SCANNED COPIES OF THIS PLAN SHEET.

REGISTERED PROFESSIONAL ENGINEER No. Exp. CIVIL STATE OF CALIFORNIA

PRELIMINARY DESIGN ONLY FOR REVIEW

NOTE:

ELBOW ANGLE IS APPROXIMATE, FIELD VERIFY PRIOR TO PROCUREMENT.

LARGER LAND SURVEY REQUIRED TO ENSURE PRECISE LOCATION OF INLET.

CUT AND COVER INSTALLATION WILL REQUIRE AN ENGINEERING SHORING PLAN TO INSTALL 42" CSP THAT TRAVELS UNDER ROUTE 101. DEPTH OF CUT IS APPROX. 25 FT.

A TCE WILL BE OBTAINED FOR ACCESS TO OUTLET AND STAGING

PDE: PERMANENT DRAINAGE EASAMENT

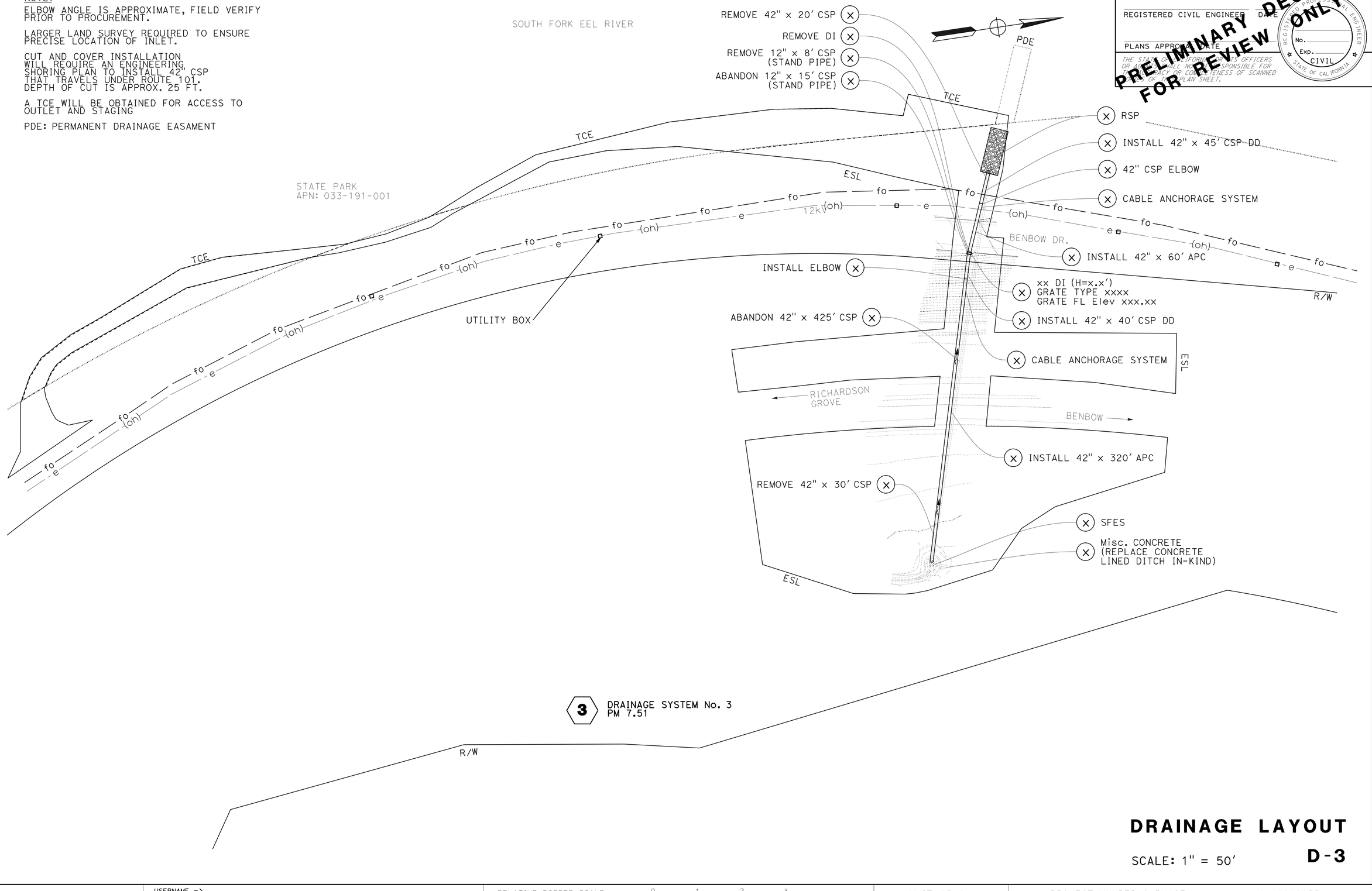

DRAINAGE LAYOUT

SCALE: 1" = 50'

D-3

REVISED BY | DATE REVISED

CALCULATED-DESIGNED BY | CHECKED BY

Daniel Anderson

FUNCTIONAL SUPERVISOR

Matt Smith

STATE OF CALIFORNIA - DEPARTMENT OF TRANSPORTATION

Caltrans

LAST REVISION 10-26-22

DATE PLOTTED => 26-OCT-2022

TIME PLOTTED => 13:47

BORDER LAST REVISED 8/5/2020

USERNAME =>

DGN FILE => 01170000245ia000_PM 7.51.dgn

RELATIVE BORDER SCALE IS IN INCHES 0 1 2 3

UNIT 0312

PROJECT NUMBER & PHASE 01160000351

Dist	COUNTY	LOCATION CODE	POST MILES TOTAL PROJECT	SHEET No.	TOTAL SHEETS
01	HUM	101			78

REGISTERED CIVIL ENGINEER DATE

PLANS APPROVAL DATE

THE STATE OF CALIFORNIA, ITS OFFICERS OR AGENTS SHALL NOT BE RESPONSIBLE FOR THE ACCURACY OR COMPLETENESS OF SCANNED IMAGES OF THIS PLAN SHEET.

REGISTERED PROFESSIONAL ENGINEER No. Exp. CIVIL STATE OF CALIFORNIA

PRELIMINARY DESIGN ONLY FOR REVIEW

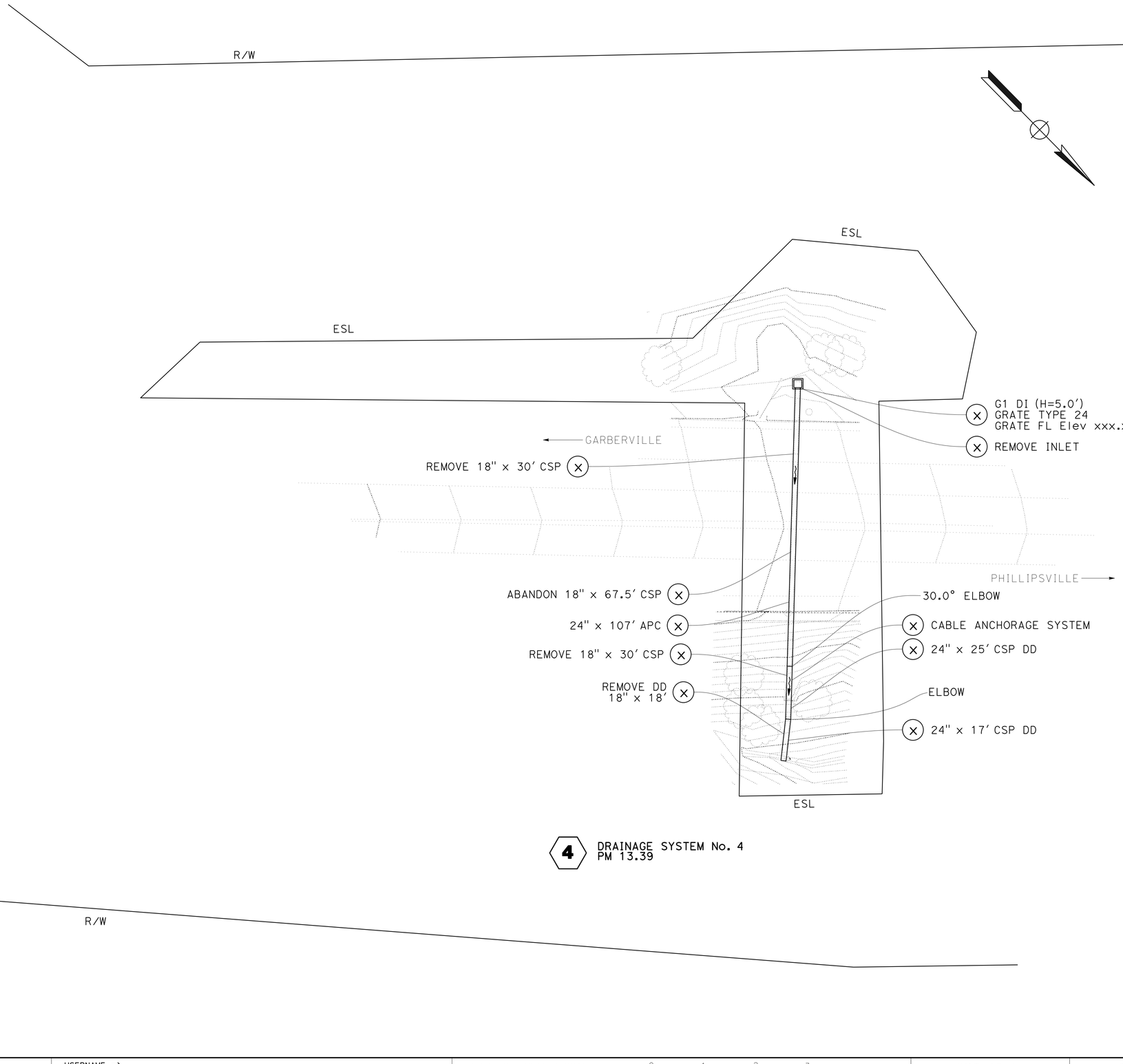

4 DRAINAGE SYSTEM No. 4
PM 13.39

DRAINAGE LAYOUT

SCALE: 1" = 20'

D-4

REVISED BY | DATE REVISED

Daniel Anderson

CALCULATED-DESIGNED BY | CHECKED BY

FUNCTIONAL SUPERVISOR

Matt Smith

STATE OF CALIFORNIA - DEPARTMENT OF TRANSPORTATION

Caltrans

LAST REVISION | DATE PLOTTED => 26-OCT-2022
10-26-22 | TIME PLOTTED => 13:47

BORDER LAST REVISED 8/5/2020

USERNAME =>
DGN FILE => 01170002451a000_PM 13.39.dgn

RELATIVE BORDER SCALE IS IN INCHES 0 1 2 3

UNIT 0312

PROJECT NUMBER & PHASE 01160000351

Dist	COUNTY	LOCATION CODE	POST MILES TOTAL PROJECT	SHEET No.	TOTAL SHEETS
01	HUM	101			78

REGISTERED CIVIL ENGINEER DATE

PLANS APPROVAL DATE

REGISTERED PROFESSIONAL ENGINEER No. Exp. CIVIL STATE OF CALIFORNIA

THE STATE OF CALIFORNIA, ITS OFFICERS OR AGENTS SHALL NOT BE RESPONSIBLE FOR ACCURACY OR COMPLETENESS OF SCANNED IMAGES OF THIS PLAN SHEET.

PRELIMINARY DESIGN ONLY FOR REVIEW

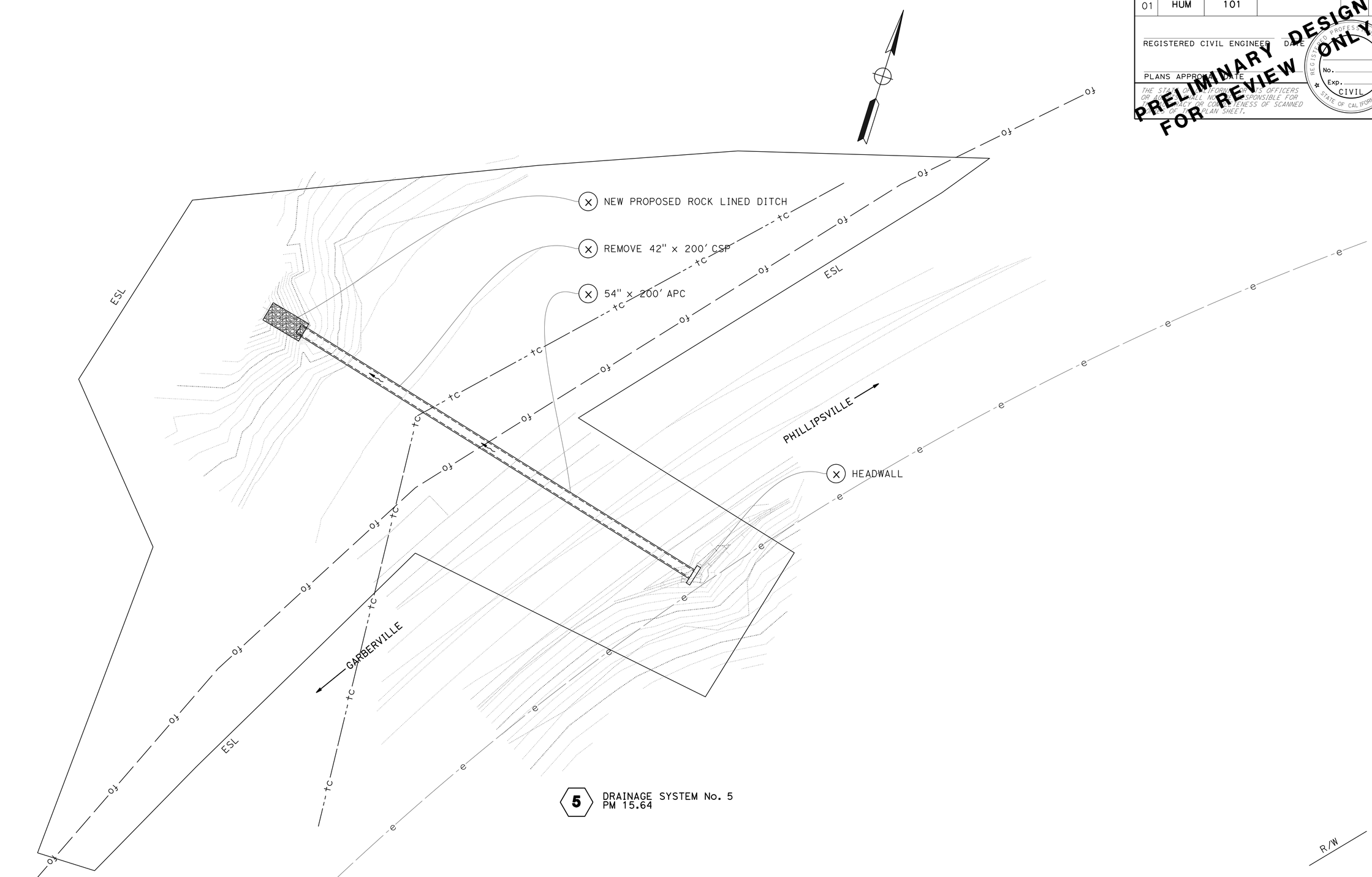

5 DRAINAGE SYSTEM No. 5
PM 15.64

R/W

DRAINAGE LAYOUT

SCALE: 1" = 20'

D-5

LAST REVISION DATE PLOTTED => 26-OCT-2022
10-26-22 TIME PLOTTED => 13:47

STATE OF CALIFORNIA - DEPARTMENT OF TRANSPORTATION
Caltrans

FUNCTIONAL SUPERVISOR: Matt Smith

CALCULATED-DESIGNED BY

CHECKED BY

Daniel Anderson

REVISED BY | DATE REVISED

BORDER LAST REVISED 8/5/2020

USERNAME =>
DGN FILE => 01170000245ia000_PM 15.64.dgn

RELATIVE BORDER SCALE IS IN INCHES 0 1 2 3

UNIT 0312

PROJECT NUMBER & PHASE 01160000351

Dist	COUNTY	LOCATION CODE	POST MILES TOTAL PROJECT	SHEET No.	TOTAL SHEETS
01	HUM	101			78

REGISTERED CIVIL ENGINEER DATE

PLANS APPROVAL DATE

THE STATE OF CALIFORNIA, ITS OFFICERS OR AGENTS SHALL NOT BE RESPONSIBLE FOR THE ACCURACY OR COMPLETENESS OF SCANNED COPIES OF THIS PLAN SHEET.

REGISTERED PROFESSIONAL ENGINEER
No.
Exp.
CIVIL
STATE OF CALIFORNIA

PRELIMINARY DESIGN ONLY FOR REVIEW

SOUTH FORK EEL RIVER

R/W

ESL

ESL

ESL

RSP

42" x 120' APC

REMOVE 30" x 120' CSP

fo

tc

GARBERVILLE

PHILLIPSVILLE

G1 DI (H=6.0')
GRATE TYPE 24
GRATE FL Elev xxx.xx
(MOVE DI 3' CLOSER TO TOE OF SLOPE)

REMOVE INLET

RETAINING WALL TYPE 1
8' HEIGHT x 24' LENGTH

6 DRAINAGE SYSTEM No. 6
PM 16.09

DRAINAGE LAYOUT

SCALE: 1" = 20'

D-6

REVISED BY	DATE REVISED

CALCULATED-DESIGNED BY: Daniel Anderson

CHECKED BY:

FUNCTIONAL SUPERVISOR: Matt Smith

STATE OF CALIFORNIA - DEPARTMENT OF TRANSPORTATION

Caltrans

LAST REVISION 10-26-22

DATE PLOTTED => 26-OCT-2022
TIME PLOTTED => 13:47

BORDER LAST REVISED 8/5/2020

USERNAME =>
DGN FILE => 0117000245ia000_PM 16.09.dgn

RELATIVE BORDER SCALE IS IN INCHES 0 1 2 3

UNIT 0312

PROJECT NUMBER & PHASE 01160000351

Dist	COUNTY	LOCATION CODE	POST MILES TOTAL PROJECT	SHEET No.	TOTAL SHEETS
01	HUM	101			78

REGISTERED CIVIL ENGINEER DATE

PLANS APPROVAL DATE

THE STATE OF CALIFORNIA, ITS OFFICERS OR AGENTS SHALL NOT BE RESPONSIBLE FOR THE ACCURACY OR COMPLETENESS OF SCANNED COPIES OF THIS PLAN SHEET.

REGISTERED PROFESSIONAL ENGINEER No. Exp. CIVIL STATE OF CALIFORNIA

PRELIMINARY DESIGN ONLY FOR REVIEW

NOTE:
TELECOMMUNICATION (FIBEROPTIC CABLE) IS KNOWN TO PUNCTURE EXISTING CSP ON WEST SIDE OF HIGHWAY 101

R/W

SOUTH FORK EEL RIVER

IMPROVE EXISTING RSP

fo

ESL

48" x 93' APC

ESL

GARBERVILLE

PHILLIPSVILLE

REMOVE 24" x 92.8' CSP

REMOVE INLET

HEADWALL

REPLACE 10' UNDERDRAIN PIPE, CONNECT TO EXISTING UNDERDRAIN SYSTEM

REPLACE 10' UNDERDRAIN PIPE, CONNECT TO EXISTING UNDERDRAIN SYSTEM

REMOVE EXIST CONCRETE LINED DITCH

RSP

G1 DI (H=5.0')
GRATE TYPE 24
GRATE FL Elev xxx.xx
(Connect to UD)

R/W

7 DRAINAGE SYSTEM No. 7
PM 16.44

DRAINAGE LAYOUT

SCALE: 1" = 20'

D-7

REVISED BY | DATE REVISED

Daniel Anderson

CALCULATED-DESIGNED BY | CHECKED BY

FUNCTIONAL SUPERVISOR

Matt Smith

STATE OF CALIFORNIA - DEPARTMENT OF TRANSPORTATION

Caltrans

LAST REVISION | DATE PLOTTED => 26-OCT-2022 | TIME PLOTTED => 13:48 | 10-26-22

BORDER LAST REVISED 8/5/2020

USERNAME =>
DGN FILE => 0117000245ia000_PM 16.44.dgn

RELATIVE BORDER SCALE IS IN INCHES 0 1 2 3

UNIT 0312

PROJECT NUMBER & PHASE 01160000351

Dist	COUNTY	LOCATION CODE	POST MILES TOTAL PROJECT	SHEET No.	TOTAL SHEETS
01	HUM	101			78

REGISTERED CIVIL ENGINEER DATE

PLANS APPROVAL DATE

REGISTERED PROFESSIONAL ENGINEER No. Exp. CIVIL STATE OF CALIFORNIA

THE STATE OF CALIFORNIA, ITS OFFICERS OR AGENTS SHALL NOT BE RESPONSIBLE FOR THE ACCURACY OR COMPLETENESS OF SCANNED TEXT OR GRAPHICS ON THIS PLAN SHEET.

PRELIMINARY DESIGN ONLY FOR REVIEW

NOTE:

ELBOW ANGLE IS APPROXIMATE, FIELD VERIFY PRIOR TO PROCUREMENT.

CONTRACTOR WILL NEED TO ACQUIRE AN ENCROACHMENT PERMIT TO ACCESS OUTLET ON HOOKER CREEK RD.

PDE: PROPOSED PERMANENT DRAINAGE EASAMENT

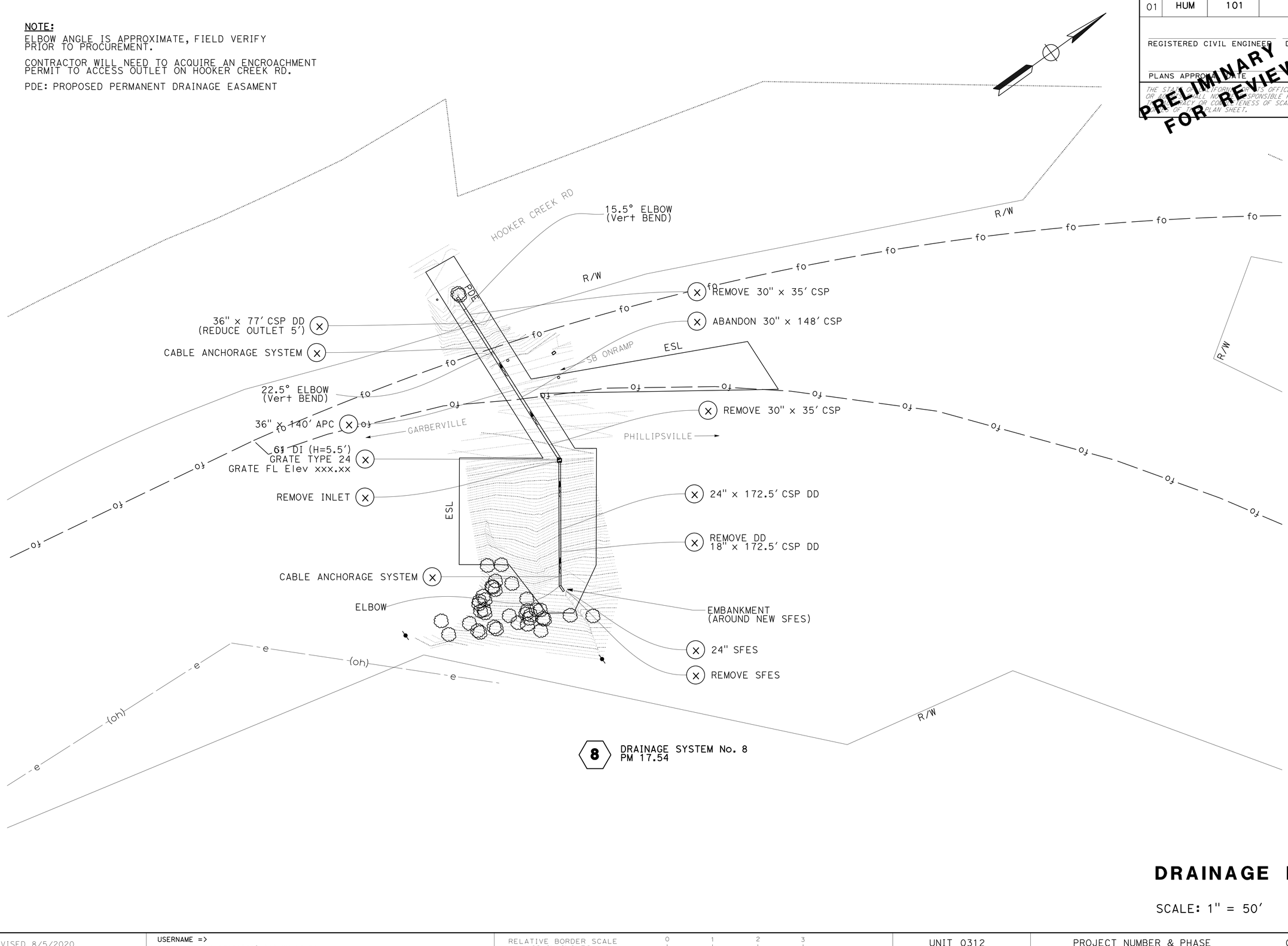

8 DRAINAGE SYSTEM No. 8
PM 17.54

DRAINAGE LAYOUT

SCALE: 1" = 50'

D-8

STATE OF CALIFORNIA - DEPARTMENT OF TRANSPORTATION

Caltrans

FUNCTIONAL SUPERVISOR: Matt Smith

CALCULATED-DESIGNED BY

CHECKED BY

Daniel Anderson

REVISED BY

DATE REVISED

LAST REVISION: DATE PLOTTED => 26-OCT-2022 10-26-22 TIME PLOTTED => 13:48

BORDER LAST REVISED 8/5/2020

USERNAME =>
DGN FILE => 01170000245ia000_PM 17.54.dgn

RELATIVE BORDER SCALE IS IN INCHES 0 1 2 3

UNIT 0312

PROJECT NUMBER & PHASE 01160000351

Dist	COUNTY	LOCATION CODE	POST MILES TOTAL PROJECT	SHEET No.	TOTAL SHEETS
01	HUM	101			78

REGISTERED CIVIL ENGINEER DATE

PLANS APPROVAL DATE

THE STATE OF CALIFORNIA, ITS OFFICERS OR AGENTS SHALL NOT BE RESPONSIBLE FOR THE ACCURACY OR COMPLETENESS OF SCANNED IMAGES OF THIS PLAN SHEET.

REGISTERED PROFESSIONAL ENGINEER No. Exp. CIVIL STATE OF CALIFORNIA

PRELIMINARY DESIGN ONLY FOR REVIEW

NOTE:
ELBOW ANGLE IS APPROXIMATE, FIELD VERIFY PRIOR TO PROCUREMENT.

LARGER LAND SURVEY REQUIRED TO ENSURE PRECISE LOCATION OF INLET AND OUTLET.

PREDICTED DSA CALCULATED BY ENGINEER SERVES AS SUGGESTION AND IS PRONE TO CHANGE DURING CONSTRUCTION.

PDE: PROPOSED PERMANENT DRAINAGE EASAMENT
APPROXIMATE LOCATION ONLY
DRAINAGE EASEMENT MAY EXIST ALREADY

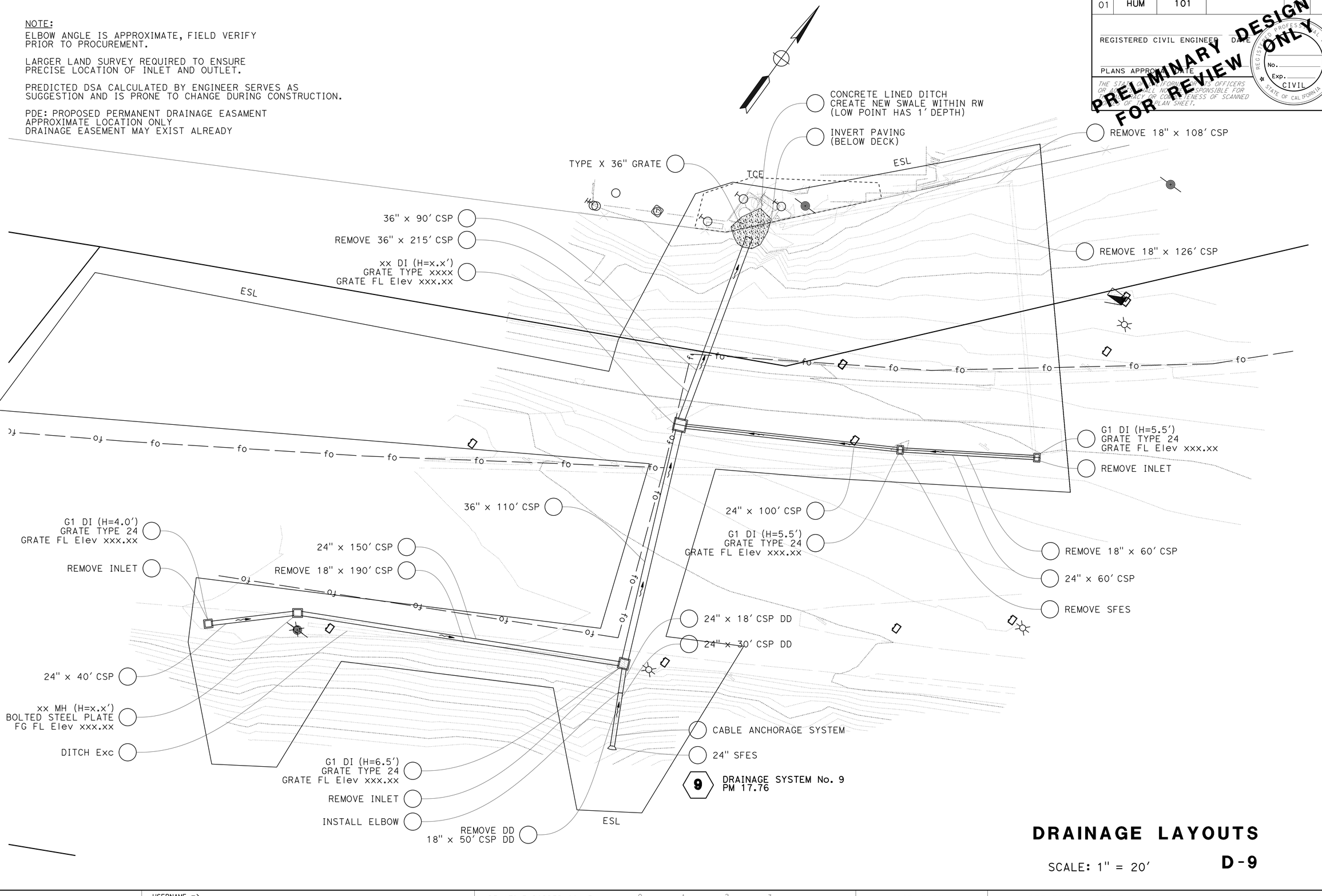

DRAINAGE LAYOUTS

SCALE: 1" = 20'

D-9

CALCULATED-DESIGNED BY

CHECKED BY

REVISED BY

DATE REVISED

Daniel Anderson

FUNCTIONAL SUPERVISOR

Matt Smith

STATE OF CALIFORNIA - DEPARTMENT OF TRANSPORTATION

Caltrans

LAST REVISION 10-26-22

DATE PLOTTED => 26-OCT-2022
TIME PLOTTED => 13:48

BORDER LAST REVISED 8/5/2020

USERNAME =>
DGN FILE => 0117000245id000_PM 17.76.dgn

RELATIVE BORDER SCALE IS IN INCHES 0 1 2 3

UNIT 0312

PROJECT NUMBER & PHASE 01160000351

Dist	COUNTY	LOCATION CODE	POST MILES TOTAL PROJECT	SHEET No.	TOTAL SHEETS
01	HUM	101			78

REGISTERED CIVIL ENGINEER DATE

PLANS APPROVAL DATE

THE STATE OF CALIFORNIA, ITS OFFICERS OR AGENTS SHALL NOT BE RESPONSIBLE FOR THE ACCURACY OR COMPLETENESS OF SCANNED COPIES OF THIS PLAN SHEET.

REGISTERED PROFESSIONAL ENGINEER No. Exp. CIVIL STATE OF CALIFORNIA

PRELIMINARY DESIGN ONLY FOR REVIEW

NOTE:
ELBOW ANGLE IS APPROXIMATE, FIELD VERIFY PRIOR TO PROCUREMENT.

LARGER LAND SURVEY REQUIRED TO ENSURE PRECISE LOCATION OF INLET.

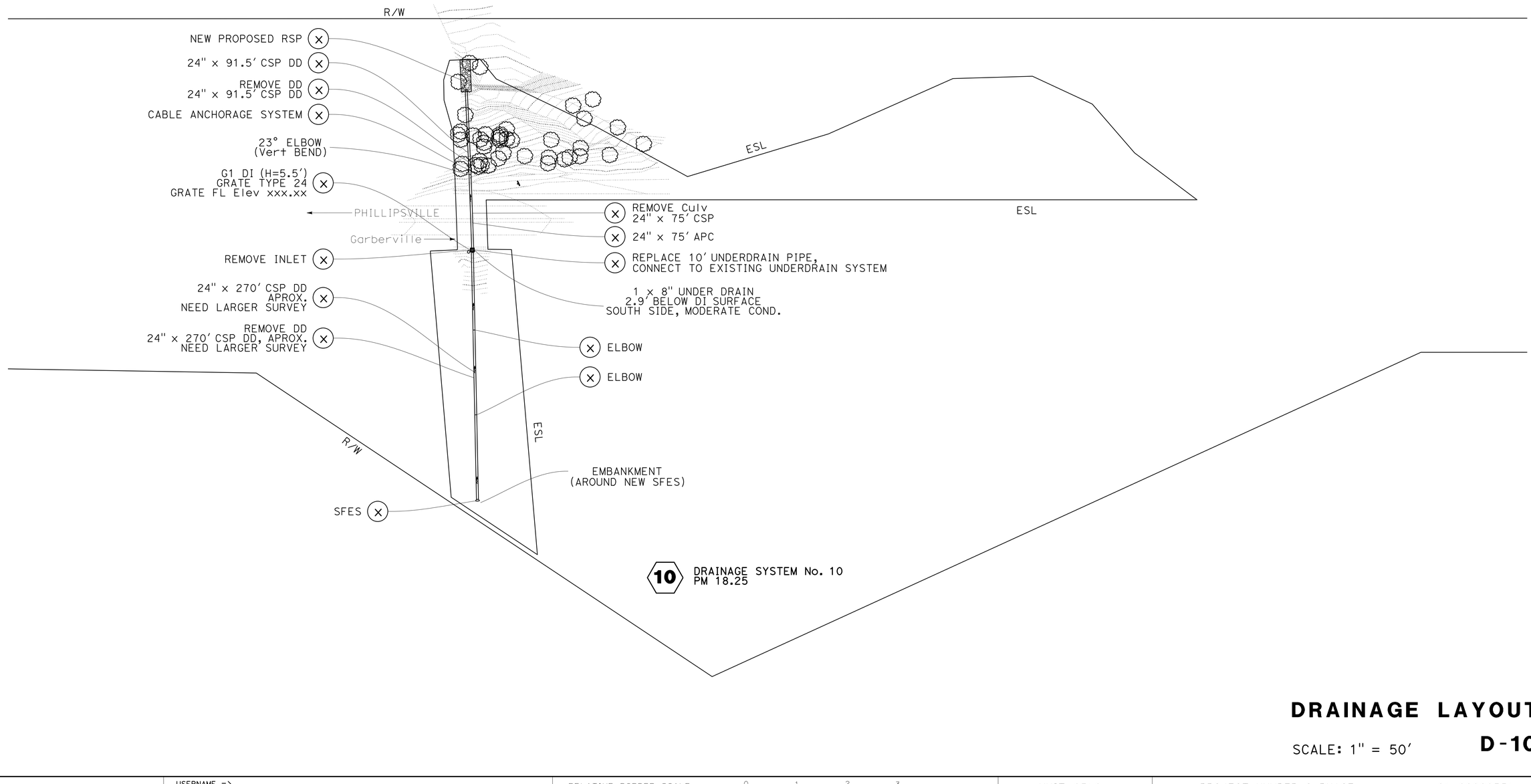

DRAINAGE LAYOUT

SCALE: 1" = 50'

D-10

STATE OF CALIFORNIA - DEPARTMENT OF TRANSPORTATION
Caltrans

FUNCTIONAL SUPERVISOR: Matt Smith
CALCULATED-DESIGNED BY: Daniel Anderson
CHECKED BY
REVISED BY
DATE REVISED

LAST REVISION
DATE PLOTTED => 26-OCT-2022
TIME PLOTTED => 13:48
10-26-22

BORDER LAST REVISED 8/5/2020
USERNAME =>
DGN FILE => 0117000245ia000_PM 18.25.dgn
RELATIVE BORDER SCALE IS IN INCHES 0 1 2 3
UNIT 0312
PROJECT NUMBER & PHASE 01160000351

Dist	COUNTY	LOCATION CODE	POST MILES TOTAL PROJECT	SHEET No.	TOTAL SHEETS
01	HUM	101		11	78

REGISTERED CIVIL ENGINEER DATE

PLANS APPROVAL DATE

THE STATE OF CALIFORNIA, ITS OFFICERS OR AGENTS SHALL NOT BE RESPONSIBLE FOR THE ACCURACY OR COMPLETENESS OF SCANNED IMAGES OF THIS PLAN SHEET.

REGISTERED PROFESSIONAL ENGINEER
No.
Exp.
CIVIL
STATE OF CALIFORNIA

PRELIMINARY DESIGN ONLY FOR REVIEW

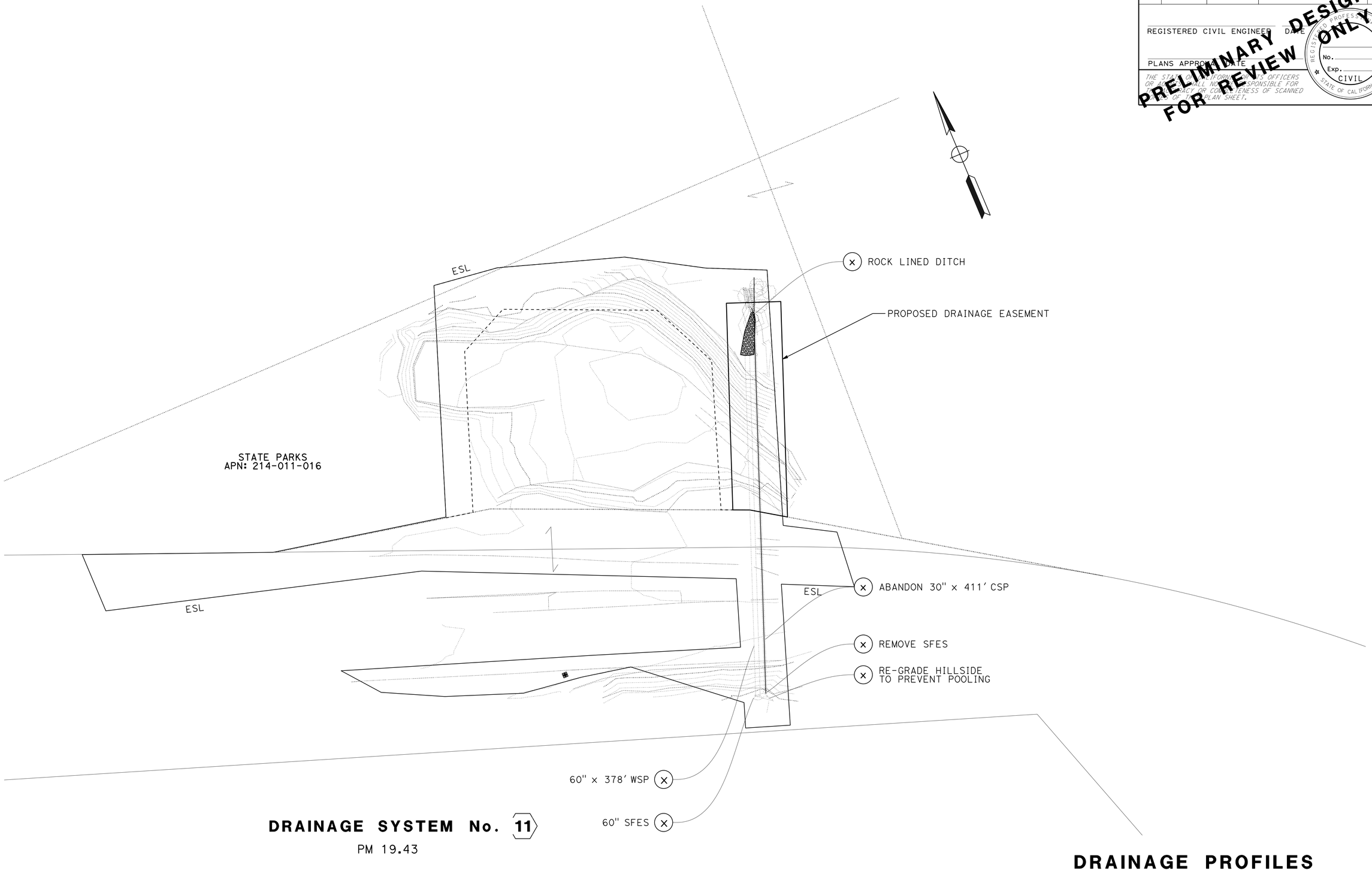

DRAINAGE SYSTEM No. 11

PM 19.43

DRAINAGE PROFILES

SCALE: 1" = 50'

D-11

CALCULATED-DESIGNED BY

CHECKED BY

Daniel Anderson

REVISED BY

DATE REVISED

FUNCTIONAL SUPERVISOR

Matt Smith

STATE OF CALIFORNIA - DEPARTMENT OF TRANSPORTATION

Caltrans

LAST REVISION 10-26-22

DATE PLOTTED => 26-OCT-2022

TIME PLOTTED => 13:48

Dist	COUNTY	LOCATION CODE	POST MILES TOTAL PROJECT	SHEET No.	TOTAL SHEETS
01	HUM	101	20.63		78

REGISTERED CIVIL ENGINEER DATE

PLANS APPROVAL DATE

REGISTERED PROFESSIONAL ENGINEER No. Exp. CIVIL STATE OF CALIFORNIA

THE STATE OF CALIFORNIA, ITS OFFICERS OR AGENTS SHALL NOT BE RESPONSIBLE FOR THE ACCURACY OR COMPLETENESS OF SCANNED COPIES OF THIS PLAN SHEET.

PRELIMINARY DESIGN ONLY FOR REVIEW

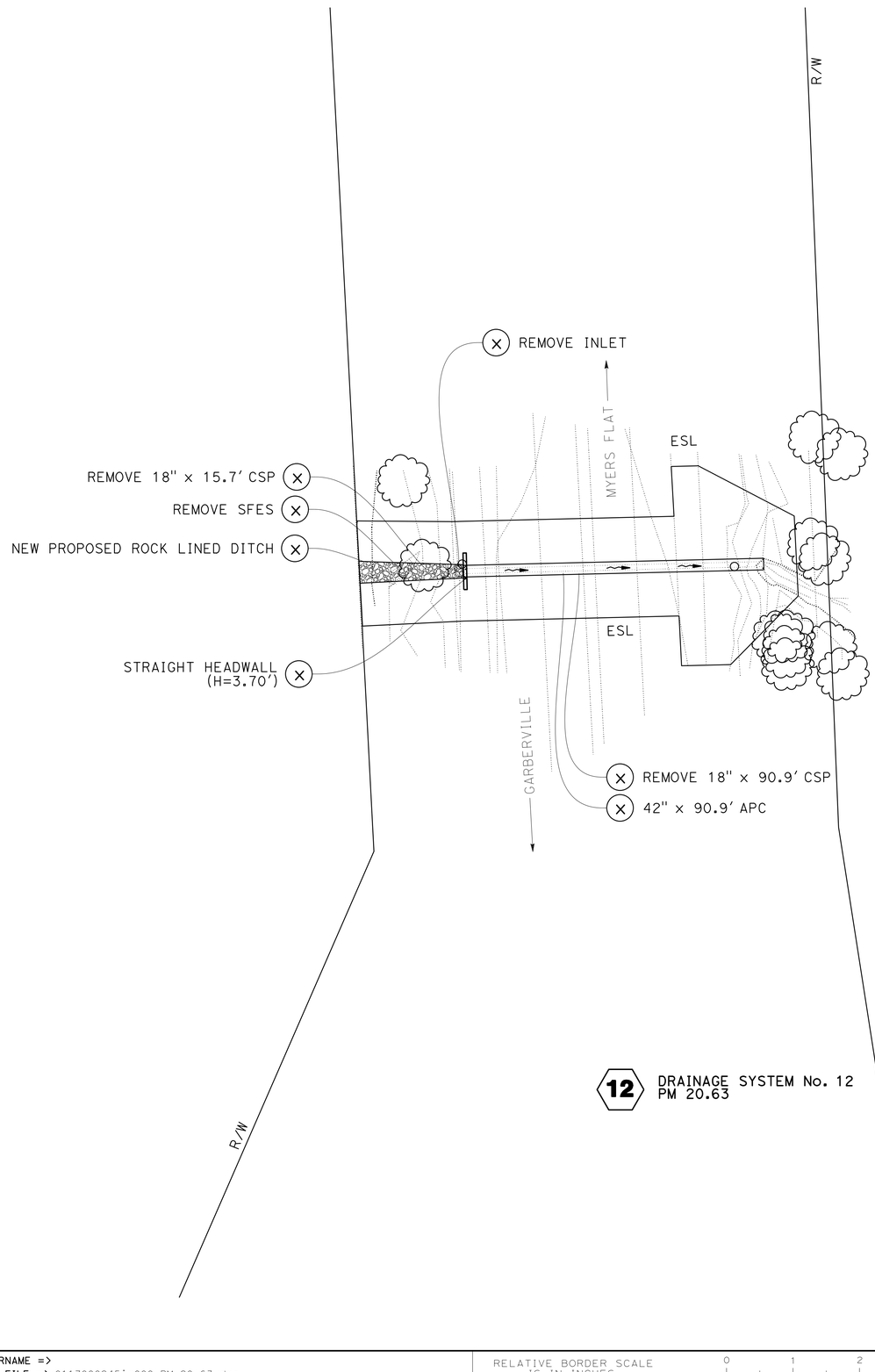

12 DRAINAGE SYSTEM No. 12
PM 20.63

DRAINAGE LAYOUT

SCALE: 1" = 20'

D-12

CALCULATED-DESIGNED BY: Daniel Anderson
CHECKED BY:
FUNCTIONAL SUPERVISOR: Matt Smith
REVISED BY
DATE REVISED

STATE OF CALIFORNIA - DEPARTMENT OF TRANSPORTATION
Caltrans

LAST REVISION 10-26-22
DATE PLOTTED => 26-OCT-2022
TIME PLOTTED => 13:48

BORDER LAST REVISED 8/5/2020
USERNAME =>
DGN FILE => 0117000245ia000_PM 20.63.dgn
RELATIVE BORDER SCALE IS IN INCHES 0 1 2 3
UNIT 0312
PROJECT NUMBER & PHASE 01160000351

Dist	COUNTY	LOCATION CODE	POST MILES TOTAL PROJECT	SHEET No.	TOTAL SHEETS
01	HUM	101			78

REGISTERED CIVIL ENGINEER DATE

PLANS APPROVAL DATE

THE STATE OF CALIFORNIA, ITS OFFICERS OR AGENTS SHALL NOT BE RESPONSIBLE FOR THE ACCURACY OR COMPLETENESS OF SCANNED IMAGES OF THIS PLAN SHEET.

REGISTERED PROFESSIONAL ENGINEER No. Exp. CIVIL STATE OF CALIFORNIA

PRELIMINARY DESIGN ONLY FOR REVIEW

NOTE:
ELBOW ANGLE IS APPROXIMATE, FIELD VERIFY PRIOR TO PROCUREMENT.

CONTRACTOR WILL NEED TO ACQUIRE AN ENCROACHMENT PERMIT IF MAPLE HILLS RD IS USED TO ACCESS THE OUTLET.

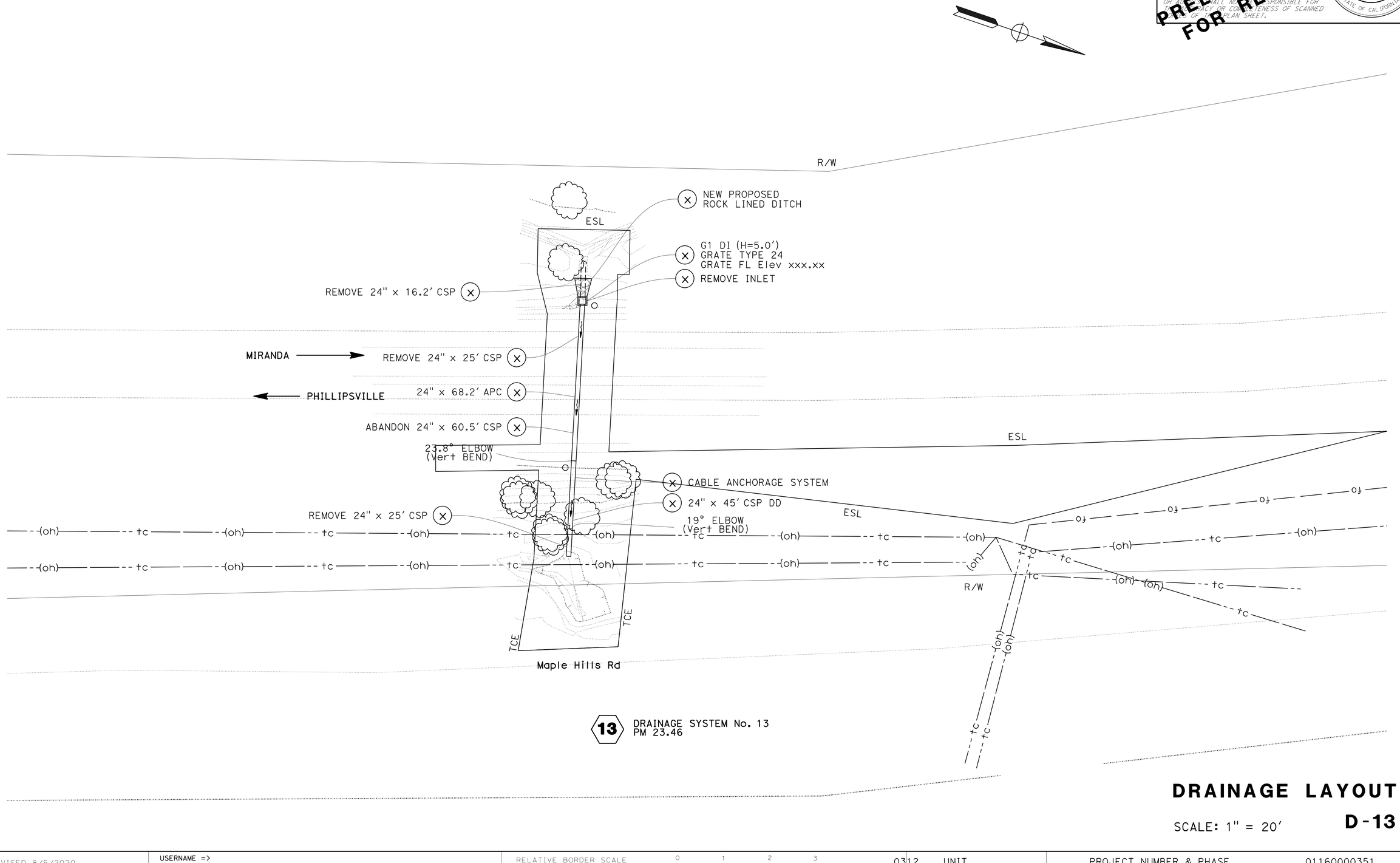

13 DRAINAGE SYSTEM No. 13
PM 23.46

DRAINAGE LAYOUT

SCALE: 1" = 20'

D-13

REVISED BY | DATE REVISED
Daniel Anderson
CALCULATED-DESIGNED BY | CHECKED BY
FUNCTIONAL SUPERVISOR
Matt Smith
STATE OF CALIFORNIA - DEPARTMENT OF TRANSPORTATION
Caltrans

LAST REVISION 10-26-22
DATE PLOTTED => 26-OCT-2022
TIME PLOTTED => 13:48

BORDER LAST REVISED 8/5/2020
USERNAME =>
DGN FILE => 0117000245ia000_PM 23.46.dgn
RELATIVE BORDER SCALE IS IN INCHES 0 1 2 3
0312 UNIT
PROJECT NUMBER & PHASE 01160000351

Dist	COUNTY	LOCATION CODE	POST MILES TOTAL PROJECT	SHEET No.	TOTAL SHEETS
01	HUM	101			78

REGISTERED CIVIL ENGINEER DATE

PLANS APPROVAL DATE

THE STATE OF CALIFORNIA, ITS OFFICERS OR AGENTS SHALL NOT BE RESPONSIBLE FOR THE ACCURACY OR COMPLETENESS OF SCANNED COPIES OF THIS PLAN SHEET.

REGISTERED PROFESSIONAL ENGINEER No. Exp. CIVIL STATE OF CALIFORNIA

PRELIMINARY DESIGN ONLY FOR REVIEW

R/W

fo fo fo fo fo fo fo fo fo fo fo fo fo fo

ESL

EXPANDED G2 DI (H=4.5')
GRATE TYPE 24
GRATE FL Elev xxx.xx

REMOVE INLET

PIERCY

REMOVE 30" x 86.6' CSP

36" x 86.6' APC

ELBOW

BENBOW

CABLE ANCHORAGE SYSTEM

36" x 12.2' CSP DD

REMOVE DD
30" x 12.2' CSP DD

IMPROVE EXISTING
CONCRETE RSP

ESL

S FORK EEL R

14 DRAINAGE SYSTEM No. 14
PM 26.16

R/W

DRAINAGE LAYOUT

SCALE: 1" = 20'

D-14

REVISED BY | DATE REVISED

Daniel Anderson

CALCULATED-DESIGNED BY | CHECKED BY

FUNCTIONAL SUPERVISOR

Matt Smith

STATE OF CALIFORNIA - DEPARTMENT OF TRANSPORTATION

Caltrans

LAST REVISION | DATE PLOTTED => 26-OCT-2022
10-26-22 | TIME PLOTTED => 13:49

BORDER LAST REVISED 8/5/2020

USERNAME =>
DGN FILE => 01170000245ia000_PM 26.16.dgn

RELATIVE BORDER SCALE IS IN INCHES 0 1 2 3

UNIT 0312

PROJECT NUMBER & PHASE 01160000351

Dist	COUNTY	LOCATION CODE	POST MILES TOTAL PROJECT	SHEET No.	TOTAL SHEETS
01	HUM	101			78

REGISTERED CIVIL ENGINEER DATE

PLANS APPROVAL DATE

THE STATE OF CALIFORNIA, ITS OFFICERS OR AGENTS SHALL NOT BE RESPONSIBLE FOR THE ACCURACY OR COMPLETENESS OF SCANNED COPIES OF THIS PLAN SHEET.

REGISTERED PROFESSIONAL ENGINEER No. Exp. CIVIL STATE OF CALIFORNIA

PRELIMINARY DESIGN ONLY FOR REVIEW

NOTE:
ELBOW ANGLE IS APPROXIMATE, FIELD VERIFY PRIOR TO PROCUREMENT.

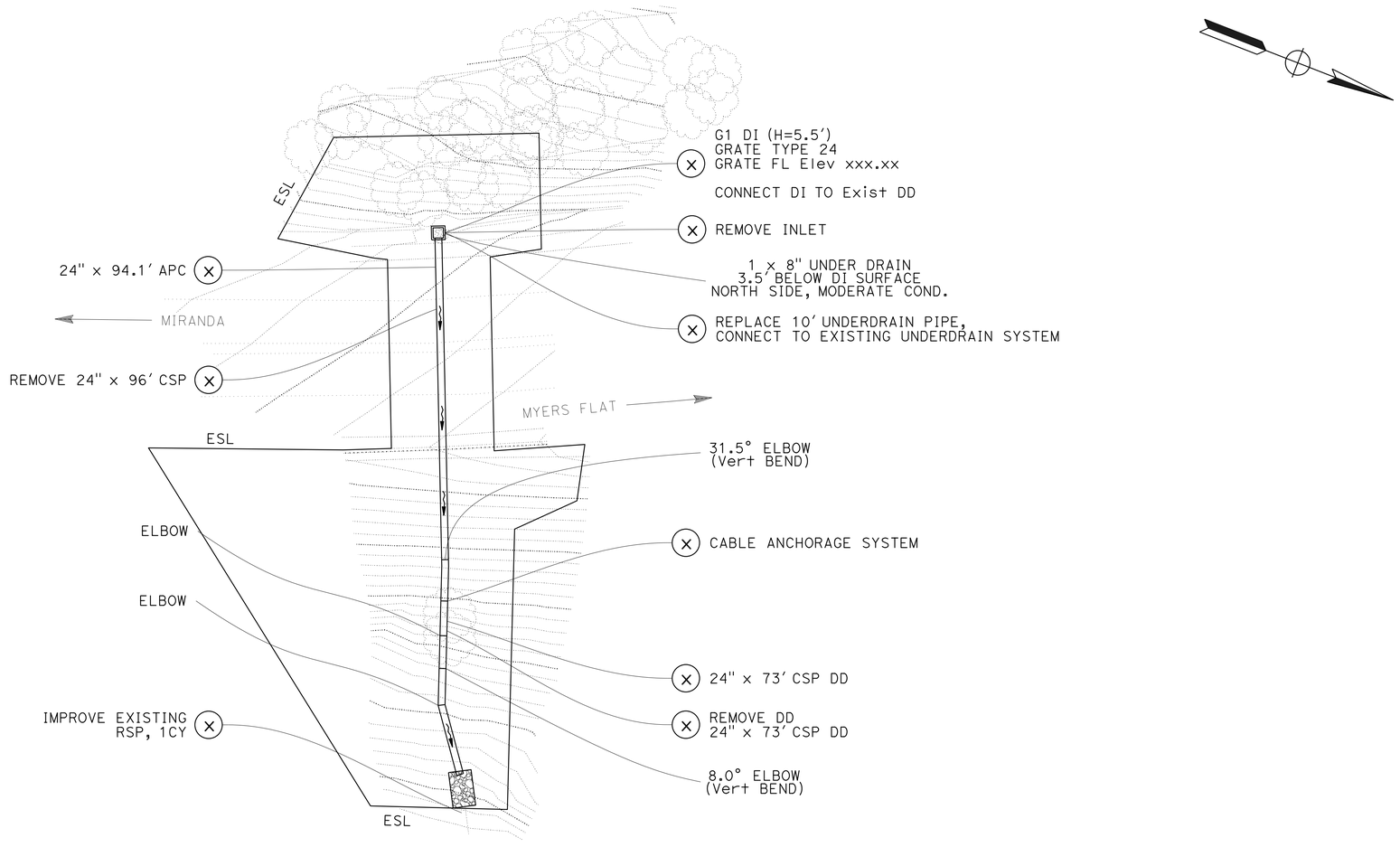

15 DRAINAGE SYSTEM No. 15
PM 26.78

DRAINAGE LAYOUT

SCALE: 1" = 20'

D-15

LAST REVISION 10-26-22
DATE PLOTTED => 26-OCT-2022
TIME PLOTTED => 13:49

REVISED BY | DATE REVISED

CALCULATED-DESIGNED BY: Daniel Anderson
CHECKED BY

FUNCTIONAL SUPERVISOR: Matt Smith

STATE OF CALIFORNIA - DEPARTMENT OF TRANSPORTATION
Caltrans

BORDER LAST REVISED 8/5/2020

USERNAME =>
DGN FILE => 01170000245ia000_PM 26.78.dgn

RELATIVE BORDER SCALE IS IN INCHES 0 1 2 3

UNIT 0312

PROJECT NUMBER & PHASE 01160000351

Dist	COUNTY	LOCATION CODE	POST MILES TOTAL PROJECT	SHEET No.	TOTAL SHEETS
01	HUM	101		16	78

REGISTERED CIVIL ENGINEER DATE

PLANS APPROVAL DATE

THE STATE OF CALIFORNIA, ITS OFFICERS OR AGENTS SHALL NOT BE RESPONSIBLE FOR THE ACCURACY OR COMPLETENESS OF SCANNED IMAGES OF THIS PLAN SHEET.

REGISTERED PROFESSIONAL ENGINEER No. Exp. CIVIL STATE OF CALIFORNIA

PRELIMINARY DESIGN ONLY FOR REVIEW

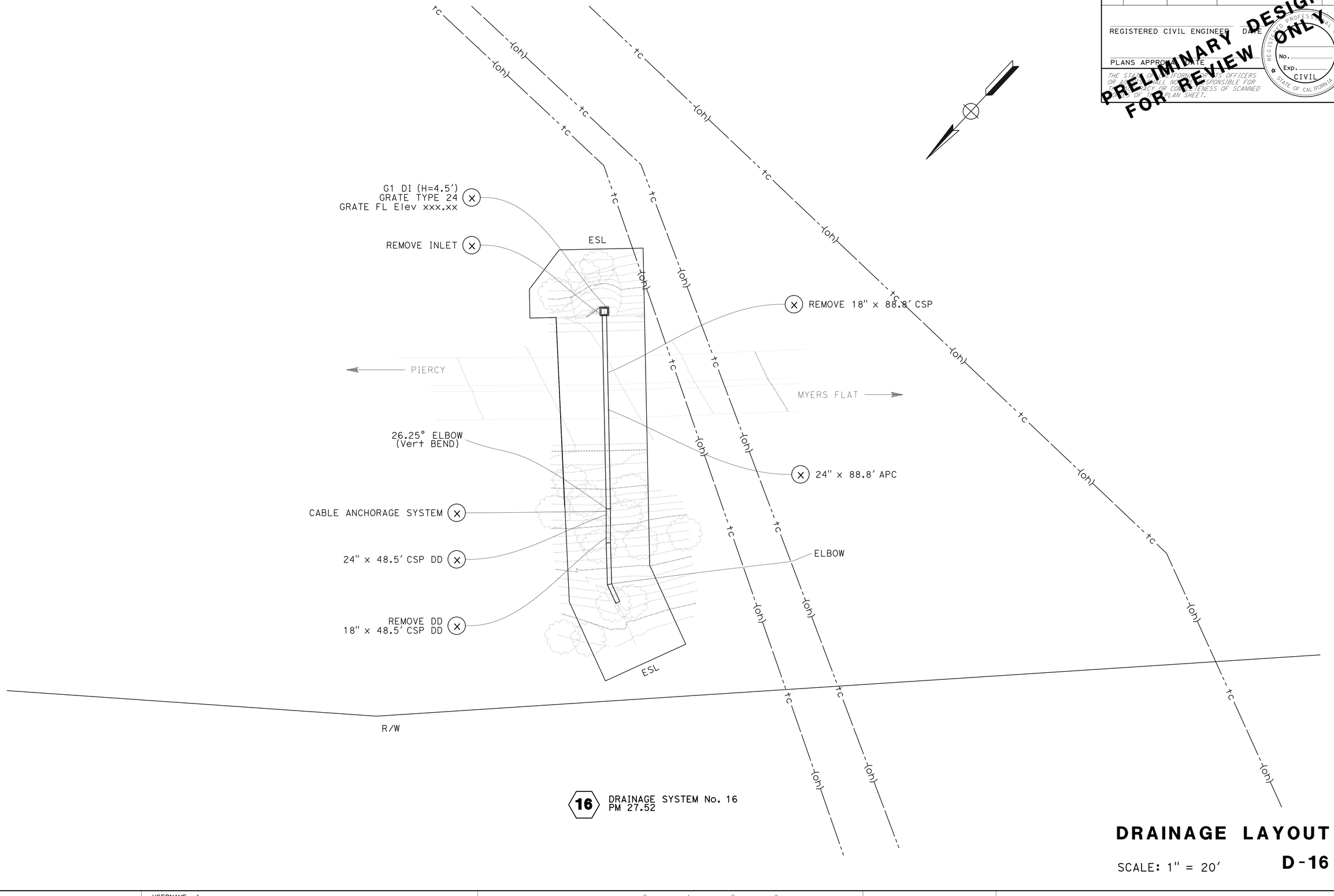

16 DRAINAGE SYSTEM No. 16
PM 27.52

DRAINAGE LAYOUT

SCALE: 1" = 20'

D-16

STATE OF CALIFORNIA - DEPARTMENT OF TRANSPORTATION
Caltrans

FUNCTIONAL SUPERVISOR: Matt Smith

CALCULATED-DESIGNED BY

CHECKED BY

Daniel Anderson

REVISED BY

DATE REVISED

LAST REVISION
DATE PLOTTED => 26-OCT-2022
TIME PLOTTED => 13:49
10-26-22

BORDER LAST REVISED 8/5/2020

USERNAME =>
DGN FILE => 01170000245ia000_PM 27.52.dgn

RELATIVE BORDER SCALE IS IN INCHES 0 1 2 3

UNIT 0312

PROJECT NUMBER & PHASE 01160000351

Dist	COUNTY	LOCATION CODE	POST MILES TOTAL PROJECT	SHEET No.	TOTAL SHEETS
01	HUM	101			78

REGISTERED CIVIL ENGINEER DATE

PLANS APPROVAL DATE

THE STATE OF CALIFORNIA EXEMPTS OFFICERS OR AGENTS FROM ALL RESPONSIBILITY FOR ACCURACY OR COMPLETENESS OF SCANNED IMAGES OF THIS PLAN SHEET.

REGISTERED PROFESSIONAL ENGINEER No. Exp. CIVIL STATE OF CALIFORNIA

PRELIMINARY DESIGN ONLY FOR REVIEW

NOTE:
CONTRACTOR WILL NEED TO ACQUIRE AN ENCROACHMENT PERMIT IF WORK WILL BE CONDUCTED OUTSIDE OF RW

G1 DI (H=5.25')
GRATE TYPE 24
GRATE FL Elev xxx.xx

REMOVE INLET

REMOVE 18" x 105' CSP

G1 DI (H=18.5')
GRATE TYPE 24
GRATE FL Elev xxx.xx

24" x 105' APC
(CONNECT TO EXISTING JUNCTION BOX)

48" x 72' APC
(CONNECT TO EXISTING DI)

REMOVE 42" x 72' RCP

STRAIGHT (HEADWALL
(H=6.2')

ESL

NEWTON ROAD

MYERS FLAT

REDCREST

R/W

17 DRAINAGE SYSTEM No. 17
PM 33.23

DRAINAGE LAYOUT

SCALE: 1" = 50'

D-17

REVISED BY	DATE REVISED

CALCULATED-DESIGNED BY: Daniel Anderson
CHECKED BY:

FUNCTIONAL SUPERVISOR: Matt Smith

STATE OF CALIFORNIA - DEPARTMENT OF TRANSPORTATION
Caltrans

LAST REVISION | DATE PLOTTED => 26-OCT-2022
10-26-22 | TIME PLOTTED => 13:49

BORDER LAST REVISED 8/5/2020 | USERNAME => | DGN FILE => 01170002451a000_PM 33.23.dgn | RELATIVE BORDER SCALE IS IN INCHES 0 1 2 3 | UNIT 0312 | PROJECT NUMBER & PHASE 01160000351

Dist	COUNTY	LOCATION CODE	POST MILES TOTAL PROJECT	SHEET No.	TOTAL SHEETS
01	HUM	101			78

REGISTERED CIVIL ENGINEER DATE

PLANS APPROVAL DATE

THE STATE OF CALIFORNIA EMPLOYEES OFFICERS OR AGENTS SHALL NOT BE RESPONSIBLE FOR THE ACCURACY OR COMPLETENESS OF SCANNED IMAGES OF THIS PLAN SHEET.

REGISTERED PROFESSIONAL ENGINEER No. Exp. CIVIL STATE OF CALIFORNIA

PRELIMINARY DESIGN ONLY FOR REVIEW

NOTE:
ELBOW ANGLE IS APPROXIMATE, FIELD VERIFY PRIOR TO PROCUREMENT.

RE-ALIGN PROPOSED COLLECTOR PIPE CLOSER TO THE TOE OF SLOPE, IN THE 1-PHASE

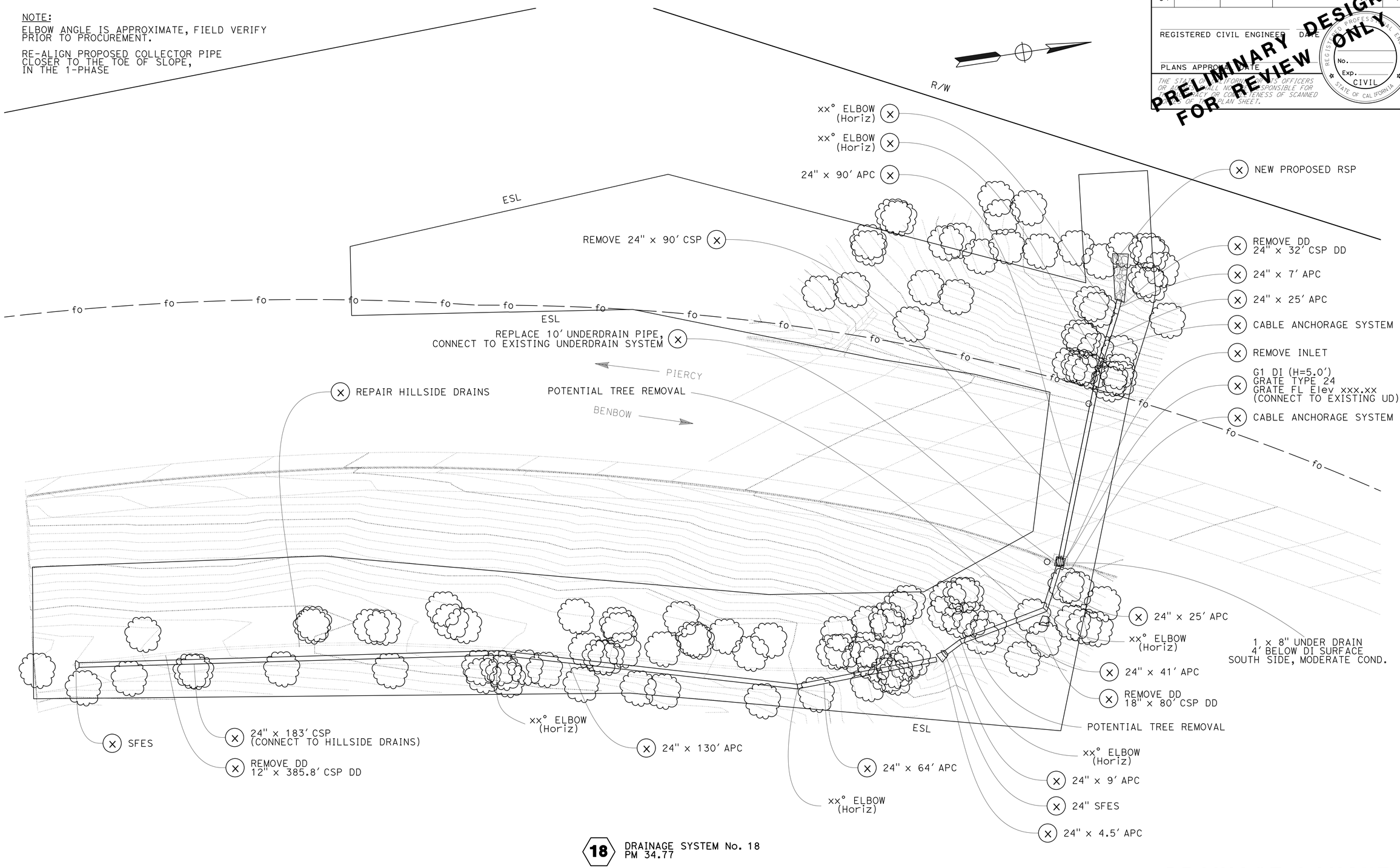

18 DRAINAGE SYSTEM No. 18
PM 34.77

DRAINAGE LAYOUT

SCALE: 1" = 20'

D-18

STATE OF CALIFORNIA - DEPARTMENT OF TRANSPORTATION
Caltrans

FUNCTIONAL SUPERVISOR: Matt Smith

CALCULATED-DESIGNED BY

CHECKED BY

Daniel Anderson

REVISED BY

DATE REVISED

LAST REVISION
DATE PLOTTED => 26-OCT-2022
TIME PLOTTED => 13:49
10-26-22

BORDER LAST REVISED 8/5/2020

USERNAME =>
DGN FILE => 0117000245ia000_PM 34.77.dgn

RELATIVE BORDER SCALE IS IN INCHES 0 1 2 3

UNIT 0312

PROJECT NUMBER & PHASE 01160000351

Dist	COUNTY	LOCATION CODE	POST MILES TOTAL PROJECT	SHEET No.	TOTAL SHEETS
01	HUM	101			78

REGISTERED CIVIL ENGINEER DATE

PLANS APPROVAL DATE

THE STATE OF CALIFORNIA, ITS OFFICERS OR AGENTS SHALL NOT BE RESPONSIBLE FOR ACCURACY OR COMPLETENESS OF SCANNED IMAGES OF THIS PLAN SHEET.

REGISTERED PROFESSIONAL ENGINEER No. Exp. CIVIL STATE OF CALIFORNIA

PRELIMINARY DESIGN ONLY FOR REVIEW

NOTE:

ABANDONED TELECOMMUNICATION (FIBEROPTIC CABLE) IS KNOWN TO PUNCTURE EXISTING CSP ON WEST SIDE OF HIGHWAY 101, D1 PERMITS IS WORKING WITH AT&T TO REMOVE SAID CABLE SYSTEM UNDER AN ENCROACHMENT PERMIT

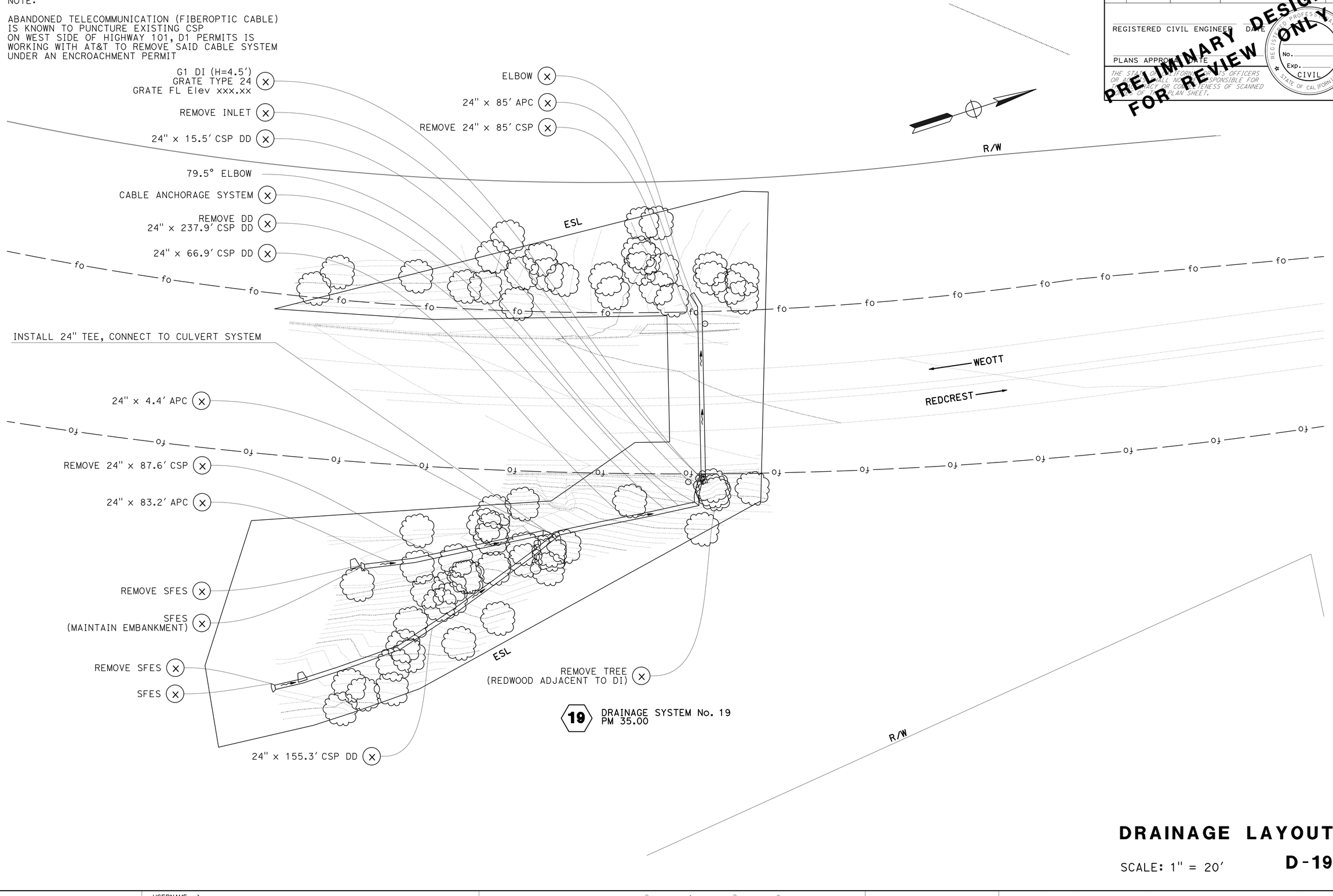

DRAINAGE LAYOUT

SCALE: 1" = 20'

D-19

STATE OF CALIFORNIA - DEPARTMENT OF TRANSPORTATION

Caltrans

FUNCTIONAL SUPERVISOR: Matt Smith

CALCULATED-DESIGNED BY

CHECKED BY

REVISED BY	DATE REVISED
Daniel Anderson	

LAST REVISION: DATE PLOTTED => 26-OCT-2022
10-26-22 TIME PLOTTED => 13:49

BORDER LAST REVISED 8/5/2020

USERNAME =>
DGN FILE => 01170000245ia000_PM 35.00.dgn

RELATIVE BORDER SCALE IS IN INCHES 0 1 2 3

UNIT 0312

PROJECT NUMBER & PHASE 01160000351

Dist	COUNTY	LOCATION CODE	POST MILES TOTAL PROJECT	SHEET No.	TOTAL SHEETS
01	HUM	101			78

REGISTERED CIVIL ENGINEER DATE

PLANS APPROVAL DATE

THE STATE OF CALIFORNIA, ITS OFFICERS OR AGENTS SHALL NOT BE RESPONSIBLE FOR THE ACCURACY OR COMPLETENESS OF SCANNED COPIES OF THIS PLAN SHEET.

REGISTERED PROFESSIONAL ENGINEER No. Exp. CIVIL STATE OF CALIFORNIA

PRELIMINARY DESIGN ONLY FOR REVIEW

NOTE:

ELBOW ANGLE IS APPROXIMATE, FIELD VERIFY PRIOR TO PROCUREMENT.

LARGER LAND SURVEY REQUIRED TO ENSURE PRECISE LOCATION OF INLET.

TCE WILL BE OBTAINED TO ACCESS THE PROJECT FROM HWY 254, TO HIGH ROCK CAMP.

PREDICTED DSA CALCULATED BY ENGINEER SERVES AS SUGGESTION AND IS PRONE TO CHANGE DURING CONSTRUCTION.

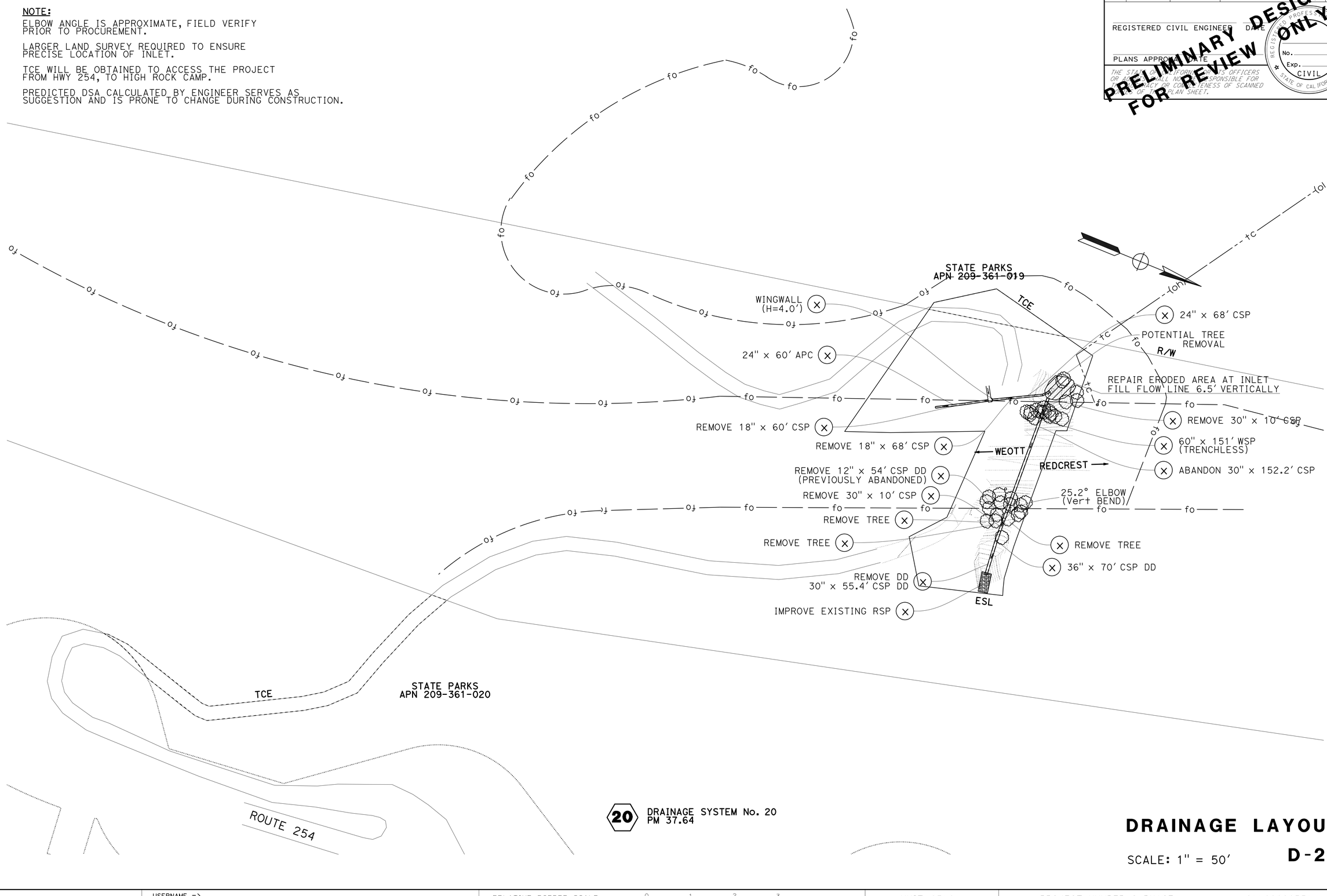

20 DRAINAGE SYSTEM No. 20
PM 37.64

DRAINAGE LAYOUT

SCALE: 1" = 50'

D-20

REVISED BY | DATE REVISED

CALCULATED-DESIGNED BY: Daniel Anderson

CHECKED BY

FUNCTIONAL SUPERVISOR: Matt Smith

STATE OF CALIFORNIA - DEPARTMENT OF TRANSPORTATION

Caltrans

LAST REVISION 10-26-22 | DATE PLOTTED => 26-OCT-2022 | TIME PLOTTED => 13:49

BORDER LAST REVISED 8/5/2020 | USERNAME => | DGN FILE => 01170000245ia000_PM 37.64.dgn | RELATIVE BORDER SCALE IS IN INCHES 0 1 2 3 | UNIT 0312 | PROJECT NUMBER & PHASE 01160000351

Dist	COUNTY	LOCATION CODE	POST MILES TOTAL PROJECT	SHEET No.	TOTAL SHEETS
01	HUM	101			78

REGISTERED CIVIL ENGINEER DATE

PLANS APPROVAL DATE

THE STATE OF CALIFORNIA, ITS OFFICERS OR AGENTS SHALL NOT BE RESPONSIBLE FOR THE ACCURACY OR COMPLETENESS OF SCANNED IMAGES OF THIS PLAN SHEET.

REGISTERED PROFESSIONAL ENGINEER No. Exp. CIVIL STATE OF CALIFORNIA

PRELIMINARY DESIGN ONLY FOR REVIEW

NOTE:

ELBOW ANGLE IS APPROXIMATE, FIELD VERIFY PRIOR TO PROCUREMENT.

A PERMANENT DRAINAGE EASEMENT WILL NEED TO BE OBTAINED FOR THE OUTLET OF THIS SYSTEM.

PDE: PROPOSED PERMANENT DRAINAGE EASAMENT

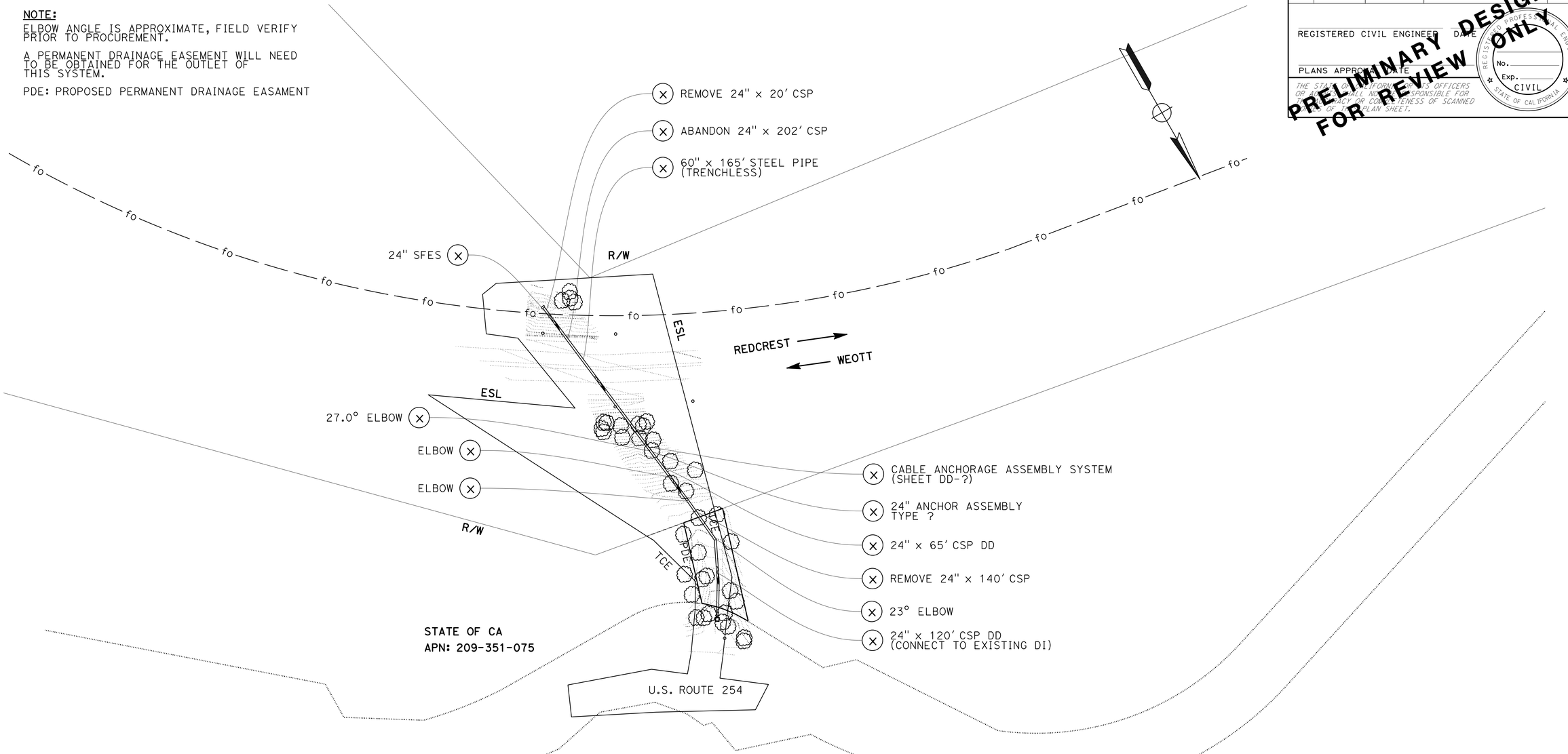

21 DRAINAGE SYSTEM No. 21
PM 39.01

DRAINAGE LAYOUT

SCALE: 1" = 50'

D-21

REVISED BY | DATE REVISED

CALCULATED-DESIGNED BY | Daniel Anderson

CHECKED BY

FUNCTIONAL SUPERVISOR | Matt Smith

STATE OF CALIFORNIA - DEPARTMENT OF TRANSPORTATION

Caltrans

LAST REVISION | DATE PLOTTED => 26-OCT-2022
10-26-22 | TIME PLOTTED => 13:49

BORDER LAST REVISED 8/5/2020 | USERNAME => | DGN FILE => 0117000245ia000_PM 39.01.dgn | RELATIVE BORDER SCALE IS IN INCHES 0 1 2 3 | UNIT 0312 | PROJECT NUMBER & PHASE 01160000351

Dist	COUNTY	LOCATION CODE	POST MILES TOTAL PROJECT	SHEET No.	TOTAL SHEETS
01	HUM	101		28	78

REGISTERED CIVIL ENGINEER DATE

PLANS APPROVAL DATE

THE STATE OF CALIFORNIA OR ITS OFFICERS OR AGENTS SHALL NOT BE RESPONSIBLE FOR THE ACCURACY OR COMPLETENESS OF SCANNED PAGES OF THIS PLAN SHEET.

REGISTERED PROFESSIONAL ENGINEER No. Exp. CIVIL STATE OF CALIFORNIA

PRELIMINARY DESIGN FOR REVIEW ONLY

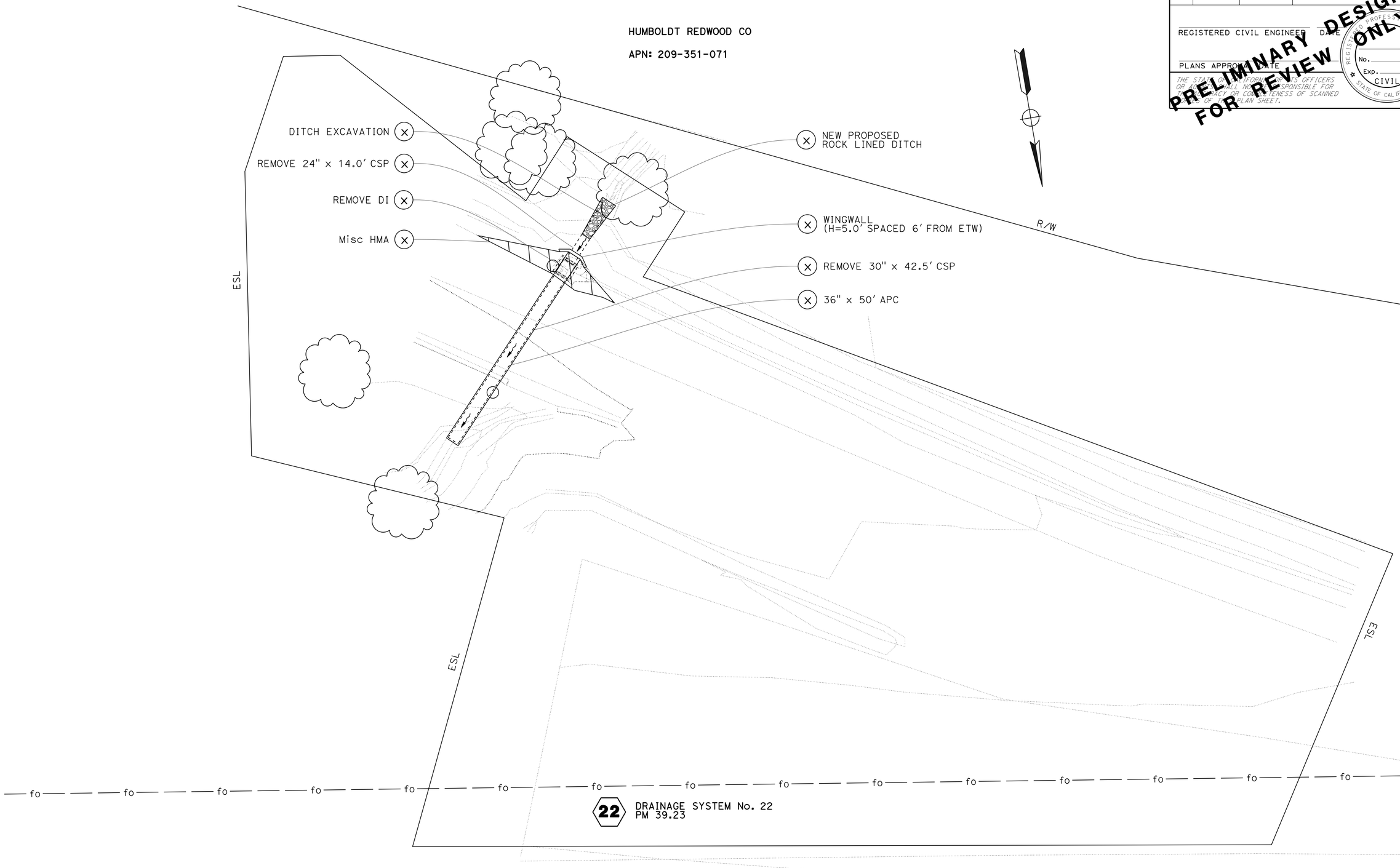

DRAINAGE LAYOUT

SCALE: 1" = 10'

D-22

STATE OF CALIFORNIA - DEPARTMENT OF TRANSPORTATION

Caltrans

FUNCTIONAL SUPERVISOR: Matt Smith

CALCULATED-DESIGNED BY: Daniel Anderson

CHECKED BY

REVISED BY

DATE REVISED

LAST REVISION 10-26-22

DATE PLOTTED => 26-OCT-2022

TIME PLOTTED => 13:49

Dist	COUNTY	LOCATION CODE	POST MILES TOTAL PROJECT	SHEET No.	TOTAL SHEETS
01	HUM	101			78

REGISTERED CIVIL ENGINEER DATE

PLANS APPROVAL DATE

THE STATE OF CALIFORNIA, ITS OFFICERS OR AGENTS SHALL NOT BE RESPONSIBLE FOR THE ACCURACY OR COMPLETENESS OF SCANNED COPIES OF THIS PLAN SHEET.

REGISTERED PROFESSIONAL ENGINEER No. Exp. CIVIL STATE OF CALIFORNIA

PRELIMINARY DESIGN ONLY FOR REVIEW

NOTE:
A TCE WILL BE ACQUIRED FOR ACCESS TO THE EXISTING INLET.

HUMBOLDT REDWOOD CO
APN: 209-351-071

ROADWAY EXCAVATION (CREATE NEW INLET POINT)
WINGWALL (H=5.0')
EMBANKMENT (COVER EXISTING INLET)
REMOVE 30" x 15' CSP
ABANDON 30" x 230' CSP
REMOVE 30" x 20' CSP
REMOVE INLET
REMOVE 30" x 72.6' CSP
REPLACE OVERSIDE DRAIN
36" x 265' WSP (TRENCHLESS)
REMOVE TREE
xx DI (H=x.x')
GRATE TYPE xxxx
GRATE FL Elev xxx.xx
36" x 75' APC
NEW PROPOSED ROCK LINED DITCH

ESL
R/W
WEOTT
PEPPERWOOD

23 DRAINAGE SYSTEM No. 23
PM 39.65

DRAINAGE LAYOUT

SCALE: 1" = 50'

D-23

STATE OF CALIFORNIA - DEPARTMENT OF TRANSPORTATION
Caltrans
FUNCTIONAL SUPERVISOR: Matt Smith
CALCULATED-DESIGNED BY
CHECKED BY
Daniel Anderson
REVISED BY
DATE REVISED

LAST REVISION DATE PLOTTED => 26-OCT-2022
TIME PLOTTED => 13:49
10-26-22

BORDER LAST REVISED 8/5/2020
USERNAME =>
DGN FILE => 0117000245ia000_PM 39.65.dgn
RELATIVE BORDER SCALE IS IN INCHES 0 1 2 3
UNIT 0312
PROJECT NUMBER & PHASE 01160000351

Dist	COUNTY	LOCATION CODE	POST MILES TOTAL PROJECT	SHEET No.	TOTAL SHEETS
01	HUM	101			78

REGISTERED CIVIL ENGINEER DATE

PLANS APPROVAL DATE

THE STATE OF CALIFORNIA, ITS OFFICERS OR AGENTS SHALL NOT BE RESPONSIBLE FOR THE ACCURACY OR COMPLETENESS OF SCANNED IMAGES OF THIS PLAN SHEET.

REGISTERED PROFESSIONAL ENGINEER No. Exp. CIVIL STATE OF CALIFORNIA

PRELIMINARY DESIGN ONLY FOR REVIEW

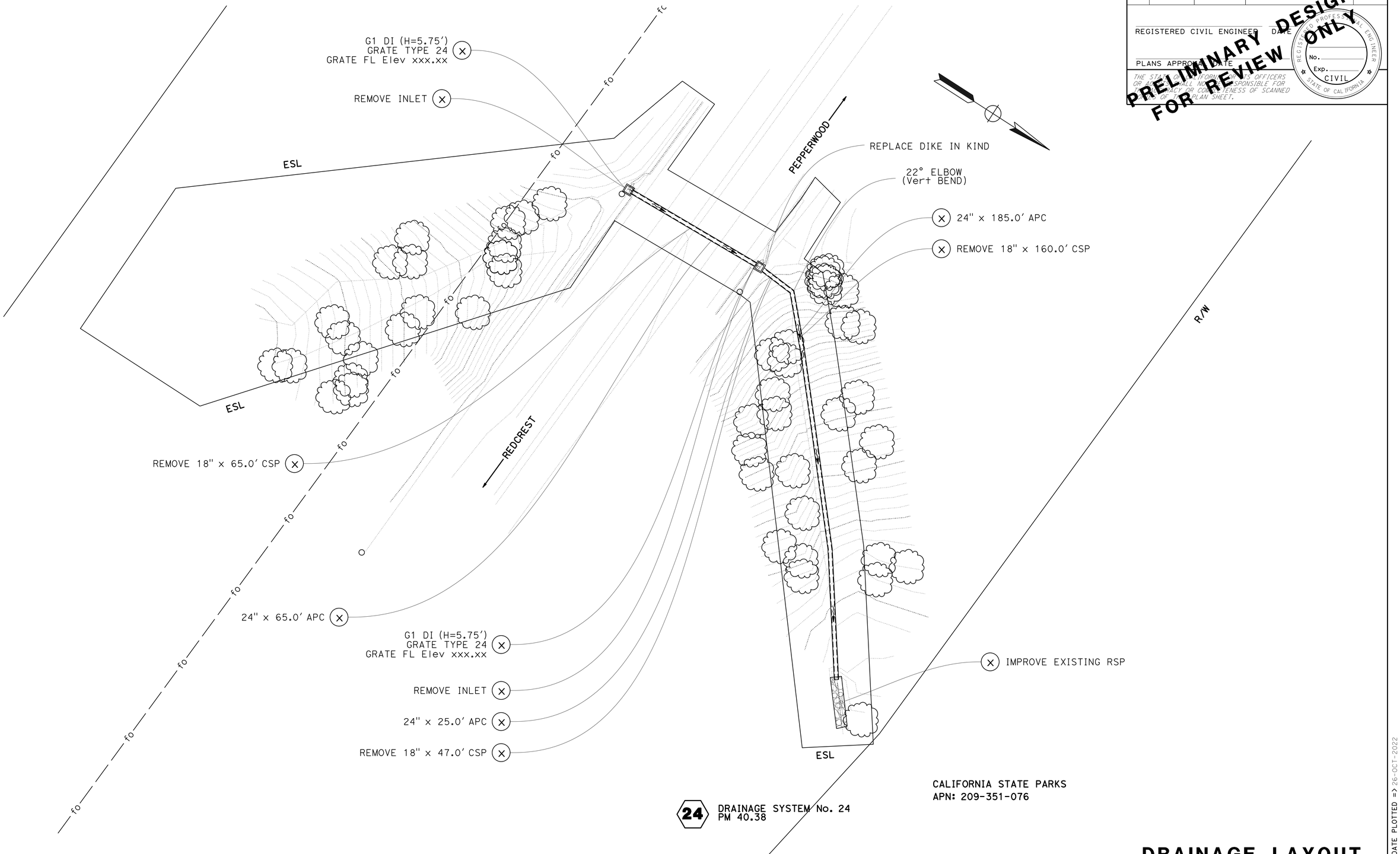

DRAINAGE LAYOUT

SCALE: 1" = 20'

D-24

CALCULATED-DESIGNED BY	CHECKED BY
Daniel Anderson	

REVISED BY	DATE REVISED

FUNCTIONAL SUPERVISOR: Matt Smith

STATE OF CALIFORNIA - DEPARTMENT OF TRANSPORTATION

Caltrans

LAST REVISION 10-26-22

DATE PLOTTED => 26-OCT-2022
TIME PLOTTED => 13:49

Dist	COUNTY	LOCATION CODE	POST MILES TOTAL PROJECT	SHEET No.	TOTAL SHEETS
01	HUM	101			78

REGISTERED CIVIL ENGINEER DATE

PLANS APPROVAL DATE

REGISTERED PROFESSIONAL ENGINEER No. Exp. CIVIL STATE OF CALIFORNIA

THE STATE OF CALIFORNIA, ITS OFFICERS OR AGENTS SHALL NOT BE RESPONSIBLE FOR THE ACCURACY OR COMPLETENESS OF SCANNED IMAGES OF THIS PLAN SHEET.

PRELIMINARY DESIGN ONLY FOR REVIEW

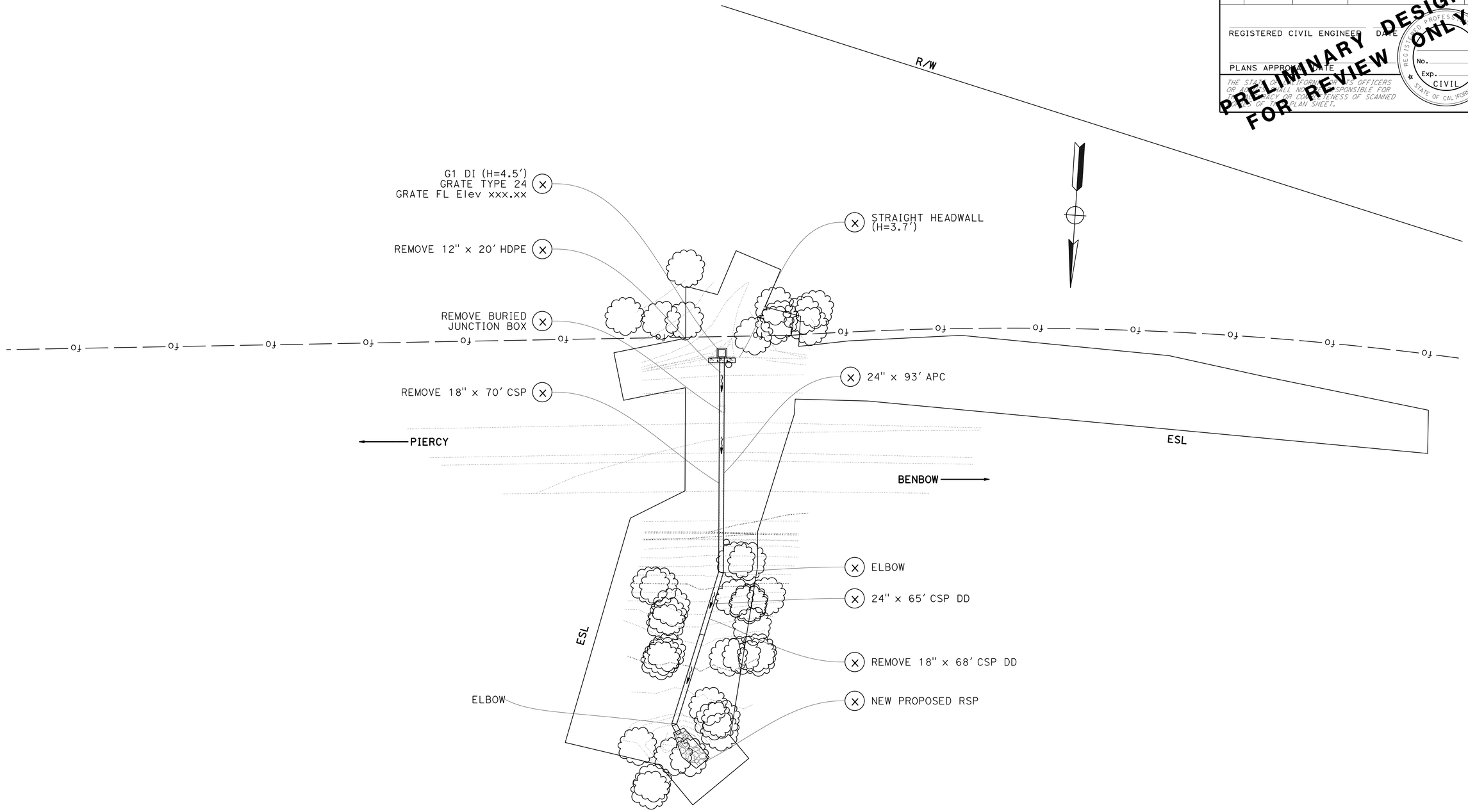

25 DRAINAGE SYSTEM No. 25
PM 41.45

DRAINAGE LAYOUT

SCALE: 1" = 20'

D-25

REVISED BY	DATE REVISED

CALCULATED-DESIGNED BY: Daniel Anderson

CHECKED BY:

FUNCTIONAL SUPERVISOR: Matt Smith

STATE OF CALIFORNIA - DEPARTMENT OF TRANSPORTATION

Caltrans

LAST REVISION 10-26-22

DATE PLOTTED => 26-OCT-2022
TIME PLOTTED => 13:49

BORDER LAST REVISED 8/5/2020

USERNAME =>
DGN FILE => 0117000245ia000_PM 41.45.dgn

RELATIVE BORDER SCALE IS IN INCHES 0 1 2 3

UNIT 0312

PROJECT NUMBER & PHASE 01160000351

Dist	COUNTY	LOCATION CODE	POST MILES TOTAL PROJECT	SHEET No.	TOTAL SHEETS
01	HUM	101			78

REGISTERED CIVIL ENGINEER DATE

PLANS APPROVAL DATE

THE STATE OF CALIFORNIA, ITS OFFICERS OR AGENTS SHALL NOT BE RESPONSIBLE FOR ACCURACY OR COMPLETENESS OF SCANNED COPIES OF THIS PLAN SHEET.

REGISTERED PROFESSIONAL ENGINEER No. Exp. CIVIL STATE OF CALIFORNIA

PRELIMINARY DESIGN ONLY FOR REVIEW

REMOVE SFES

SFES (REBUILD EMBANKMENT AROUND SFES)

REBUILD EMBANKMENT AROUND SFES

24" x 10.2' CSP DD

REMOVE 18" x 10.2' CSP

REMOVE 18" x 78' CSP

24" x 65' CSP DD

24" x 12' CSP DD

R/W

ESL

REPLACE 10' UNDERDRAIN PIPE, CONNECT TO EXISTING UNDERDRAIN SYSTEM

—REDCREST

24" x 134' APC

REMOVE 18" x 134' CSP

STAFFORD—

24" CSP ELBOW

24" CSP ELBOW

REMOVE INLET

xx DI (H=x.x')
GRATE TYPE xxxx
GRATE FL Elev xxx.xx

ESL

REPLACE 10' UNDERDRAIN PIPE, CONNECT TO EXISTING UNDERDRAIN SYSTEM

2 x 8" UNDER DRAINS
3.7' and 4.3' BELOW DI SURFACE
NORTH and SOUTH SIDE, POOR COND.

REMOVE EXISTING METAL AND CONCRETE POST ANCHORS

RSP

R/W

STATE OF CA
APN: 209-071-006

26 DRAINAGE SYSTEM No. 26
PM 41.69

DRAINAGE LAYOUT

SCALE: 1" = 50'

D-26

REVISED BY	DATE REVISED

CALCULATED-DESIGNED BY: Daniel Anderson

CHECKED BY:

FUNCTIONAL SUPERVISOR: Matt Smith

STATE OF CALIFORNIA - DEPARTMENT OF TRANSPORTATION

Caltrans

LAST REVISION 10-26-22

DATE PLOTTED => 26-OCT-2022
TIME PLOTTED => 13:50

BORDER LAST REVISED 8/5/2020

USERNAME =>
DGN FILE => 0117000245ia000_PM 41.69.dgn

RELATIVE BORDER SCALE IS IN INCHES 0 1 2 3

UNIT 0312

PROJECT NUMBER & PHASE 01160000351

Dist	COUNTY	LOCATION CODE	POST MILES TOTAL PROJECT	SHEET No.	TOTAL SHEETS
01	HUM	101			78

REGISTERED CIVIL ENGINEER DATE

PLANS APPROVAL DATE

THE STATE OF CALIFORNIA, ITS OFFICERS OR AGENTS SHALL NOT BE RESPONSIBLE FOR THE ACCURACY OR COMPLETENESS OF SCANNED COPIES OF THIS PLAN SHEET.

REGISTERED PROFESSIONAL ENGINEER No. Exp. CIVIL STATE OF CALIFORNIA

PRELIMINARY DESIGN ONLY FOR REVIEW

R/W

HUMBOLDT REDWOOD CO
APN: 209-081-029

ESL

G1 DI (H=3.75')
GRATE TYPE 24
GRATE FL Elev xxx.xx
(INSTALL 40' FROM ETW)

DITCH EXCAVATION

fo fo fo fo fo fo fo fo fo fo fo fo fo fo fo fo fo fo fo fo fo

REMOVE INLET

REMOVE 24" x 107.8' CSP

ESL

24" x 130' APC

REDCREST

STAFFORD

CABLE ANCHORAGE SYSTEM

24" CSP ELBOW

24" x 50.0' CSP DD

REMOVE 24" x 52' CSP DD

ESL

27 DRAINAGE SYSTEM No. 27
PM 42.12

R/W

DRAINAGE LAYOUT

SCALE: 1" = 20'

D-27

CALCULATED-DESIGNED BY

CHECKED BY

REVISED BY

DATE REVISED

Daniel Anderson

FUNCTIONAL SUPERVISOR

Matt Smith

STATE OF CALIFORNIA - DEPARTMENT OF TRANSPORTATION

Caltrans

LAST REVISION 10-26-22

DATE PLOTTED => 26-OCT-2022
TIME PLOTTED => 13:50

BORDER LAST REVISED 8/5/2020

USERNAME =>
DGN FILE => 0117000245ia000_PM 42.12.dgn

RELATIVE BORDER SCALE IS IN INCHES 0 1 2 3

UNIT 0312

PROJECT NUMBER & PHASE 01160000351

Dist	COUNTY	LOCATION CODE	POST MILES TOTAL PROJECT	SHEET No.	TOTAL SHEETS
01	HUM	101		28	78

REGISTERED CIVIL ENGINEER DATE

PLANS APPROVAL DATE

THE STATE OF CALIFORNIA OR ITS OFFICERS OR AGENTS SHALL NOT BE RESPONSIBLE FOR THE ACCURACY OR COMPLETENESS OF SCANNED TRACES OF THIS PLAN SHEET.

REGISTERED PROFESSIONAL ENGINEER No. Exp. CIVIL STATE OF CALIFORNIA

PRELIMINARY DESIGN FOR REVIEW ONLY

NOTE:
Existing 4.5' x 5.2' x 264.1' ELLIPTICAL CSP DRAINAGE SYSTEM

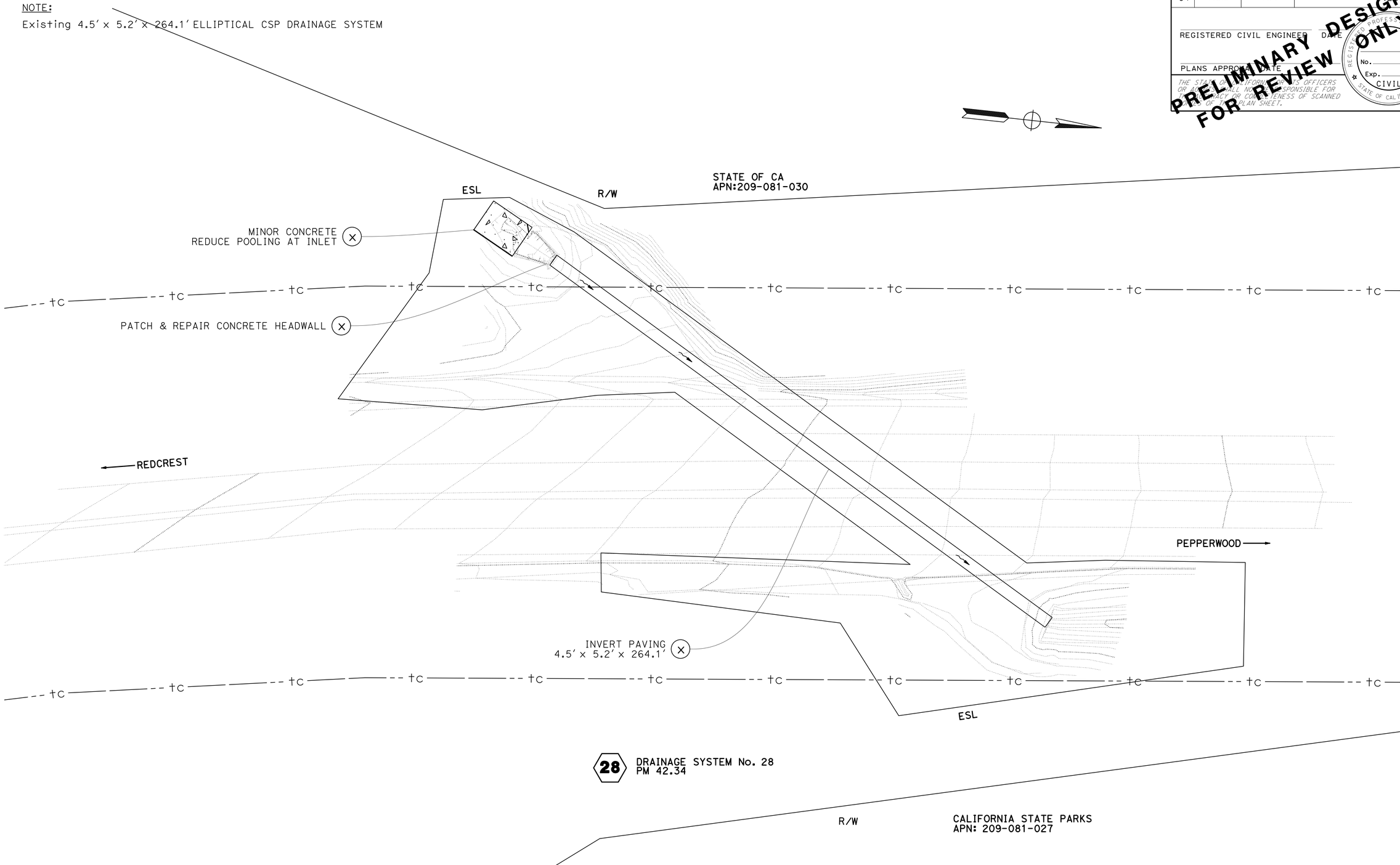

DRAINAGE LAYOUT

SCALE: 1" = 20'

D-28

STATE OF CALIFORNIA - DEPARTMENT OF TRANSPORTATION

Caltrans

FUNCTIONAL SUPERVISOR: Matt Smith

CALCULATED-DESIGNED BY: Daniel Anderson

CHECKED BY

REVISED BY

DATE REVISED

LAST REVISION 10-26-22

DATE PLOTTED => 26-OCT-2022
TIME PLOTTED => 13:50

Dist	COUNTY	LOCATION CODE	POST MILES TOTAL PROJECT	SHEET No.	TOTAL SHEETS
01	HUM	101			78

REGISTERED CIVIL ENGINEER DATE

PLANS APPROVAL DATE

THE STATE OF CALIFORNIA, ITS OFFICERS OR AGENTS SHALL NOT BE RESPONSIBLE FOR THE ACCURACY OR COMPLETENESS OF SCANNED COPIES OF THIS PLAN SHEET.

REGISTERED PROFESSIONAL ENGINEER No. Exp. CIVIL STATE OF CALIFORNIA

PRELIMINARY DESIGN ONLY FOR REVIEW

HUMBOLDT REDWOOD COMPANY
APN 209-081-20

R/W

GO DI (H=5.0')
GRATE TYPE 24
GRATE FL Elev xxx.xx
(CONNECT TO EXISTING UD)

REMOVE INLET

REMOVE 24" x 45' CSP

REDCREST

36" x 132' APC

REMOVE 24" x 18.1' CSP

NEW PROPOSED RSP

REMOVE HEADWALL

WINGWALL
(H=4')

ABANDON 24" x 90.1' CSP

ESL

ESL

ESL

STAFFORD

36" APC ELBOW

36" x 20' CSP DD
REDUCE LENGTH BY 5'

fo

R/W

STATE PARKS
APN 209-081-27

29 DRAINAGE SYSTEM No. 29
PM 43.17

DRAINAGE LAYOUT

SCALE: 1" = 20'

D-29

STATE OF CALIFORNIA - DEPARTMENT OF TRANSPORTATION

Caltrans

FUNCTIONAL SUPERVISOR: Matt Smith

CALCULATED-DESIGNED BY

CHECKED BY

Daniel Anderson

REVISED BY

DATE REVISED

LAST REVISION DATE PLOTTED => 26-OCT-2022
TIME PLOTTED => 13:50

10-26-22

BORDER LAST REVISED 8/5/2020

USERNAME =>
DGN FILE => 0117000245ia000_PM 43.17.dgn

RELATIVE BORDER SCALE IS IN INCHES 0 1 2 3

UNIT 0312

PROJECT NUMBER & PHASE 01160000351

Dist	COUNTY	LOCATION CODE	POST MILES TOTAL PROJECT	SHEET No.	TOTAL SHEETS
01	HUM	101			78

REGISTERED CIVIL ENGINEER DATE

PLANS APPROVAL DATE

REGISTERED PROFESSIONAL ENGINEER No. Exp. CIVIL STATE OF CALIFORNIA

THE STATE OF CALIFORNIA, ITS OFFICERS OR AGENTS SHALL NOT BE RESPONSIBLE FOR ACCURACY OR COMPLETENESS OF SCANNED IMAGES OF THIS PLAN SHEET.

PRELIMINARY DESIGN ONLY FOR REVIEW

REDCREST

STAFFORD

DRAINAGE SYSTEM 30A

SFES

REMOVE SFES

REMOVE 18" x 75.0' CSP

24" x 76' APC (NEW ALIGNMENT)

ESL

R/W

ESL

CALIFORNIA STATE PARKS
APN: 209-081-027

DRAINAGE SYSTEM 30B

24" APC ELBOW (APPROXIMATE LOCATION ONLY)

SFES

REMOVE SFES

24" x 25' APC

24" x 68' APC

REMOVE 18" x 92' CSP

tc

ESL

R/W

30 DRAINAGE SYSTEM No. 30
PM 43.35/ 43.37

DRAINAGE LAYOUT

SCALE: 1" = 20'

D-30

REVISED BY | DATE REVISED

Daniel Anderson

CALCULATED-DESIGNED BY | CHECKED BY

FUNCTIONAL SUPERVISOR

Matt Smith

STATE OF CALIFORNIA - DEPARTMENT OF TRANSPORTATION

Caltrans

LAST REVISION | DATE PLOTTED => 26-OCT-2022
10-26-22 | TIME PLOTTED => 13:50

BORDER LAST REVISED 8/5/2020

USERNAME =>
DGN FILE => 01170002451a000_PM 43.35 43.37.dgn

RELATIVE BORDER SCALE IS IN INCHES 0 1 2 3

UNIT 0312

PROJECT NUMBER & PHASE 01160000351

Dist	COUNTY	LOCATION CODE	POST MILES TOTAL PROJECT	SHEET No.	TOTAL SHEETS
01	HUM	101			78

REGISTERED CIVIL ENGINEER DATE

PLANS APPROVAL DATE

THE STATE OF CALIFORNIA, ITS OFFICERS OR AGENTS SHALL NOT BE RESPONSIBLE FOR ACCURACY OR COMPLETENESS OF SCANNED COPIES OF THIS PLAN SHEET.

REGISTERED PROFESSIONAL ENGINEER
No.
Exp.
CIVIL
STATE OF CALIFORNIA

PRELIMINARY DESIGN ONLY FOR REVIEW

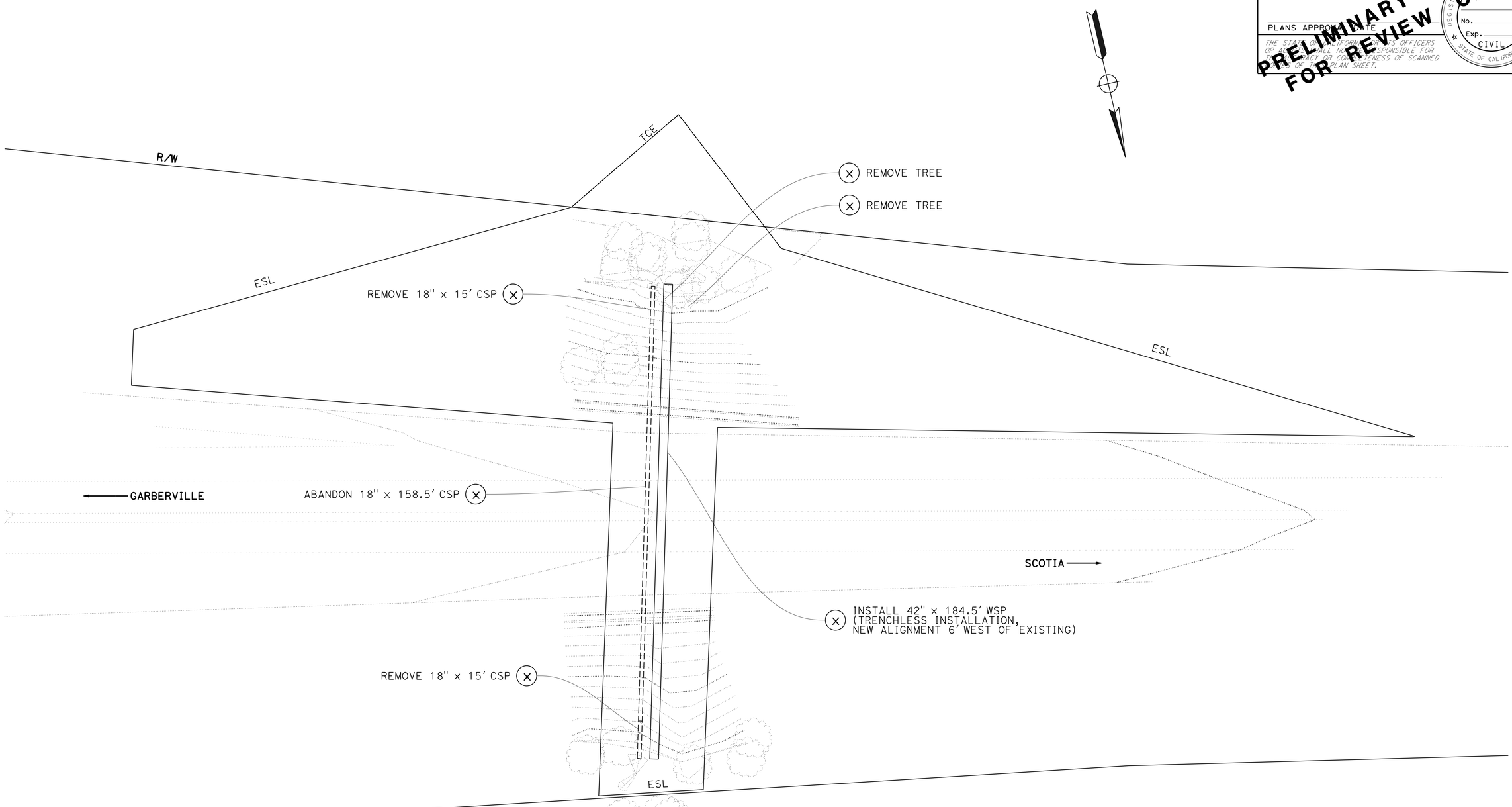

CALIFORNIA STATE PARKS
APN: 209-081-027

31 DRAINAGE SYSTEM No. 31
PM 43.54

DRAINAGE LAYOUT

SCALE: 1" = 20'

D-31

CALCULATED-DESIGNED BY

CHECKED BY

REVISED BY

DATE REVISED

Daniel Anderson

FUNCTIONAL SUPERVISOR

Matt Smith

STATE OF CALIFORNIA - DEPARTMENT OF TRANSPORTATION

Caltrans

LAST REVISION 10-26-22

DATE PLOTTED => 26-OCT-2022

TIME PLOTTED => 13:50

BORDER LAST REVISED 8/5/2020

USERNAME =>

DGN FILE => 01170000245ia000_PM 43.54.dgn

RELATIVE BORDER SCALE IS IN INCHES 0 1 2 3

UNIT 0312

PROJECT NUMBER & PHASE 01160000351

Dist	COUNTY	LOCATION CODE	POST MILES TOTAL PROJECT	SHEET No.	TOTAL SHEETS
01	HUM	101			78

REGISTERED CIVIL ENGINEER DATE

PLANS APPROVAL DATE

THE STATE OF CALIFORNIA, ITS OFFICERS OR AGENTS SHALL NOT BE RESPONSIBLE FOR THE ACCURACY OR COMPLETENESS OF SCANNED COPIES OF THIS PLAN SHEET.

REGISTERED PROFESSIONAL ENGINEER No. Exp. CIVIL STATE OF CALIFORNIA

PRELIMINARY DESIGN ONLY FOR REVIEW

NOTE:
REDUCE LENGHT OF SYSTEM BY 5'

HUMBOLDT REDWOOD CO
APN: 209-081-020

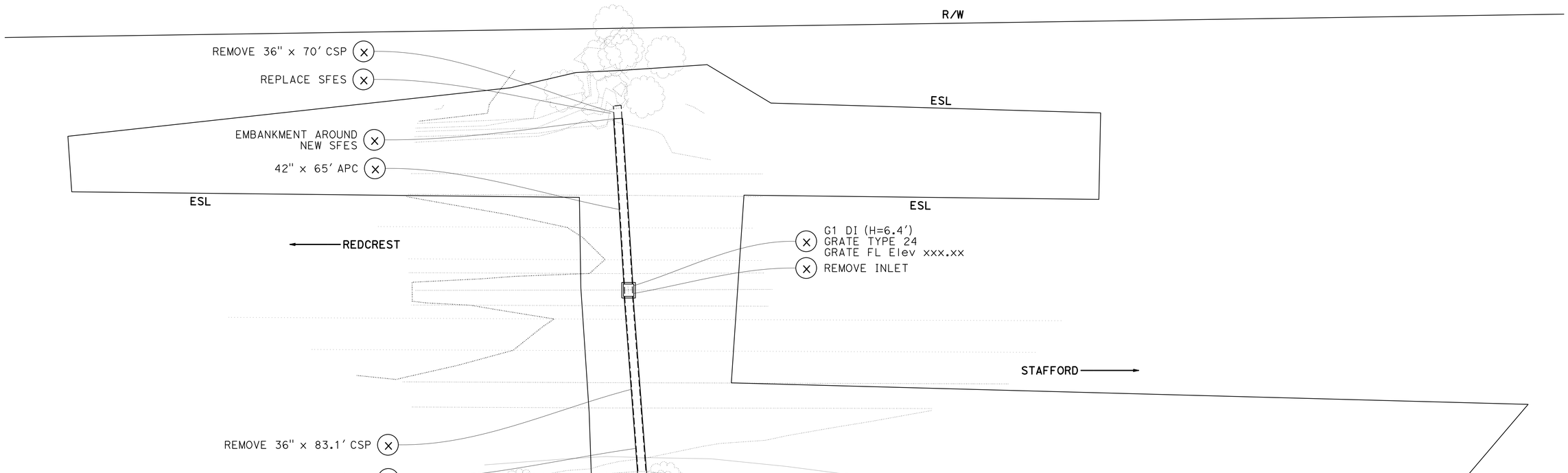

32 DRAINAGE SYSTEM No. 32
PM 44.17

CALIFORNIA STATE PARKS
APN: 209-081-027

DRAINAGE LAYOUT

SCALE: 1" = 20'

D-32

STATE OF CALIFORNIA - DEPARTMENT OF TRANSPORTATION
Caltrans

FUNCTIONAL SUPERVISOR: Matt Smith
CALCULATED-DESIGNED BY: Daniel Anderson
CHECKED BY:
REVISED BY
DATE REVISED

LAST REVISION: DATE PLOTTED => 26-OCT-2022
10-26-22 TIME PLOTTED => 13:50

BORDER LAST REVISED 8/5/2020 | USERNAME => | DGN FILE => 0117000245ia000_PM 44.17.dgn | RELATIVE BORDER SCALE IS IN INCHES 0 1 2 3 | UNIT 0312 | PROJECT NUMBER & PHASE 01160000351

Dist	COUNTY	LOCATION CODE	POST MILES TOTAL PROJECT	SHEET No.	TOTAL SHEETS
01	HUM	101			78

REGISTERED CIVIL ENGINEER DATE

PLANS APPROVAL DATE

THE STATE OF CALIFORNIA, ITS OFFICERS OR AGENTS SHALL NOT BE RESPONSIBLE FOR THE ACCURACY OR COMPLETENESS OF SCANNED COPIES OF THIS PLAN SHEET.

REGISTERED PROFESSIONAL ENGINEER No. Exp. CIVIL STATE OF CALIFORNIA

PRELIMINARY DESIGN ONLY FOR REVIEW

HUMBOLDT REDWOOD COMPANY
APN 205-321-32

R/W

G1 DI (H=4.75')
GRATE TYPE 24
GRATE FL Elev xxx.xx
(CONNECT TO EXIST UD)

REMOVE INLET

REPLACE 10' UNDERDRAIN PIPE,
CONNECT TO EXISTING UNDERDRAIN SYSTEM

ESL

SHIVELY

G1 DI (H=4.75')
GRATE TYPE 24
GRATE FL Elev xxx.xx

REMOVE INLET

INSTALL 24" x 78.2' APC

REMOVE 18" x 78.2' CSP

ESL

R/W

REPLACE 10' UNDERDRAIN PIPE,
CONNECT TO EXISTING UNDERDRAIN SYSTEM

INSTALL 24" x 44.2' APC

REMOVE 18" x 44.2' CSP

STAFFORD

IMPROVE EXISTING RSP

33 DRAINAGE SYSTEM No. 33
PM 45.25

STATE PARKS
APN 205-321-24

DRAINAGE LAYOUT

SCALE: 1" = 20'

D-33

REVISED BY | DATE REVISED

Daniel Anderson

CALCULATED-DESIGNED BY | CHECKED BY

FUNCTIONAL SUPERVISOR

Matt Smith

STATE OF CALIFORNIA - DEPARTMENT OF TRANSPORTATION

Caltrans

LAST REVISION 10-26-22 | DATE PLOTTED => 26-OCT-2022 | TIME PLOTTED => 13:50

BORDER LAST REVISED 8/5/2020 | USERNAME => | DGN FILE => 0117000245ia000_PM 45.25.dgn | RELATIVE BORDER SCALE IS IN INCHES 0 1 2 3 | UNIT 0312 | PROJECT NUMBER & PHASE | 01160000351

Dist	COUNTY	LOCATION CODE	POST MILES TOTAL PROJECT	SHEET No.	TOTAL SHEETS
01	HUM	101			78

REGISTERED CIVIL ENGINEER DATE

PLANS APPROVAL DATE

THE STATE OF CALIFORNIA, ITS OFFICERS OR AGENTS SHALL NOT BE RESPONSIBLE FOR THE ACCURACY OR COMPLETENESS OF SCANNED COPIES OF THIS PLAN SHEET.

REGISTERED PROFESSIONAL ENGINEER No. Exp. CIVIL STATE OF CALIFORNIA

PRELIMINARY DESIGN ONLY FOR REVIEW

NOTE:
LARGER LAND SURVEY REQUIRED TO ENSURE PRECISE LOCATION OF INLET AND OUTLET.

12kV

SLOPE EASEMENT

REPAIR ERODED AREA AT INLET (RAISE FL ELEV. 15' APROX.) CLAY PLUG

R/W

HUMBOLDT REDWOOD CO
APN: 205-261-006

REMOVE SFES

REMOVE 54" x 15' CSP

ESL

REDCREST

60" x 180' WSP (TRENCHLESS INSTALLATION)

ABANDON 54" x 290' CSP

60" CSP ELBOW

CABLE ANCHORAGE SYSTEM

60" x 136' CSP DD

NEED LANDING PAD FOR CONSTRUCTION CREW

G2 DI (H=8.5')
GRATE TYPE 24
GRATE FL Elev xxx.xx

DITCH EXCAVATION

60" x 75' APC

ESL

REMOVE 54" x 100' CSP

STAFFORD

IMPROVE EXISTING CONCRETE RSP

R/W

ESL

APN: 205-321-022

34 DRAINAGE SYSTEM No. 34
PM 47.01

DRAINAGE LAYOUT

SCALE: 1" = 50'

D-34

STATE OF CALIFORNIA - DEPARTMENT OF TRANSPORTATION
Caltrans

FUNCTIONAL SUPERVISOR: Matt Smith

CALCULATED-DESIGNED BY: Daniel Anderson

CHECKED BY

REVISED BY

DATE REVISED

LAST REVISION: DATE PLOTTED => 26-OCT-2022
10-26-22 TIME PLOTTED => 13:50

BORDER LAST REVISED 8/5/2020

USERNAME =>
DGN FILE => 01170000245ia000_PM 47.01.dgn

RELATIVE BORDER SCALE IS IN INCHES 0 1 2 3

UNIT 0312

PROJECT NUMBER & PHASE 01160000351

Dist	COUNTY	LOCATION CODE	POST MILES TOTAL PROJECT	SHEET No.	TOTAL SHEETS
01	HUM	101			78

REGISTERED CIVIL ENGINEER DATE

PLANS APPROVAL DATE

THE STATE OF CALIFORNIA, ITS OFFICERS OR AGENTS SHALL NOT BE RESPONSIBLE FOR THE ACCURACY OR COMPLETENESS OF SCANNED COPIES OF THIS PLAN SHEET.

REGISTERED PROFESSIONAL ENGINEER No. Exp. CIVIL STATE OF CALIFORNIA

PRELIMINARY DESIGN ONLY FOR REVIEW

HUMBOLDT REDWOOD CO
APN: 205-351-026

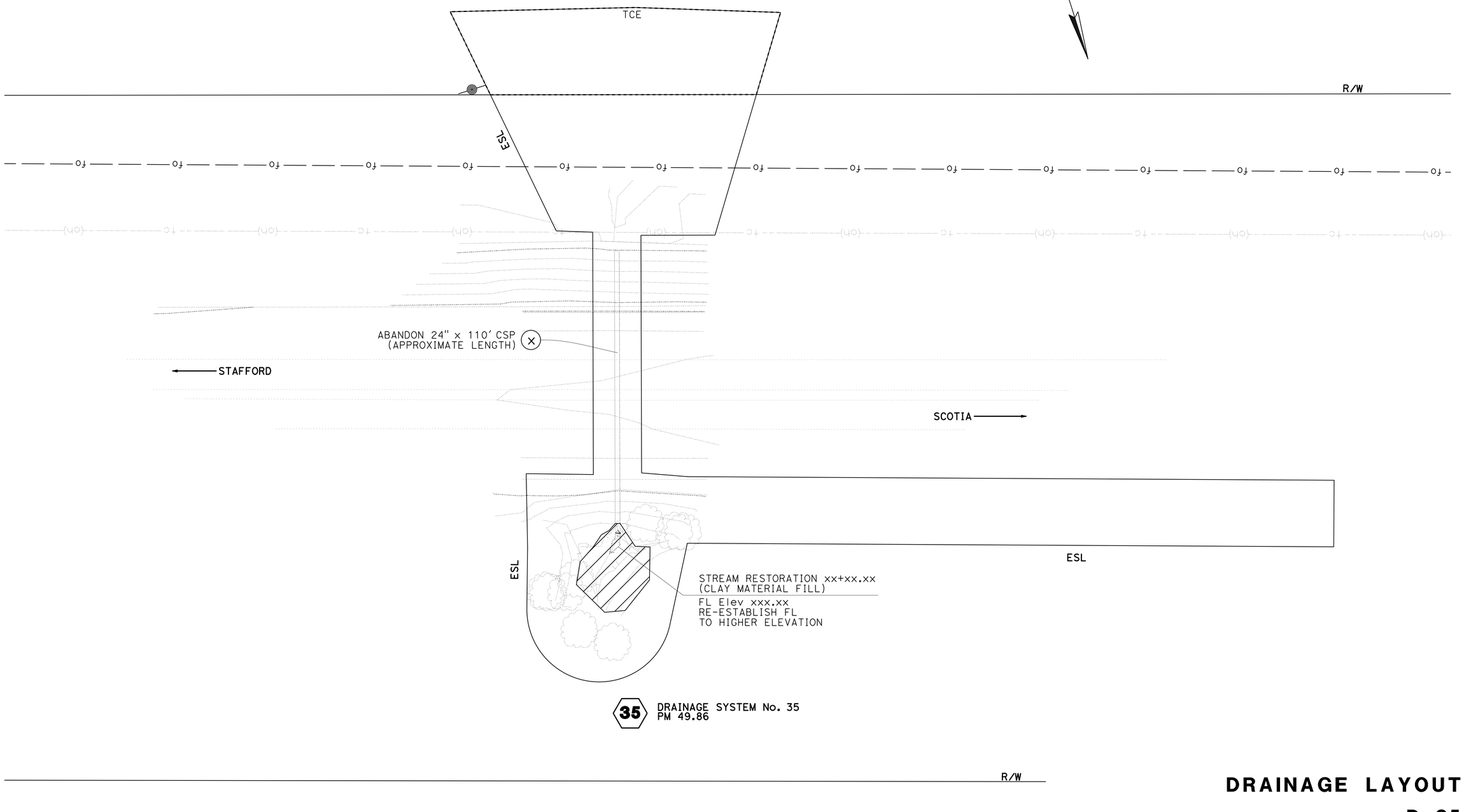

DRAINAGE LAYOUT

SCALE: 1" = 20'

D-35

REVISED BY | DATE REVISED

Daniel Anderson

CALCULATED-DESIGNED BY | CHECKED BY

FUNCTIONAL SUPERVISOR

Matt Smith

STATE OF CALIFORNIA - DEPARTMENT OF TRANSPORTATION

Caltrans

LAST REVISION | DATE PLOTTED => 26-OCT-2022 | TIME PLOTTED => 13:50

10-26-22

BORDER LAST REVISED 8/5/2020

USERNAME =>
DGN FILE => 01170002451a000_PM 49.86.dgn

RELATIVE BORDER SCALE IS IN INCHES 0 1 2 3

UNIT 0312

PROJECT NUMBER & PHASE 01160000351

Dist	COUNTY	LOCATION CODE	POST MILES TOTAL PROJECT	SHEET No.	TOTAL SHEETS
01	HUM	101		36	78

REGISTERED CIVIL ENGINEER DATE

PLANS APPROVAL DATE

THE STATE OF CALIFORNIA OR ITS OFFICERS OR AGENTS SHALL NOT BE RESPONSIBLE FOR THE ACCURACY OR COMPLETENESS OF SCANNED PAGES OF THIS PLAN SHEET.

REGISTERED PROFESSIONAL ENGINEER No. Exp. CIVIL STATE OF CALIFORNIA

PRELIMINARY DESIGN FOR REVIEW ONLY

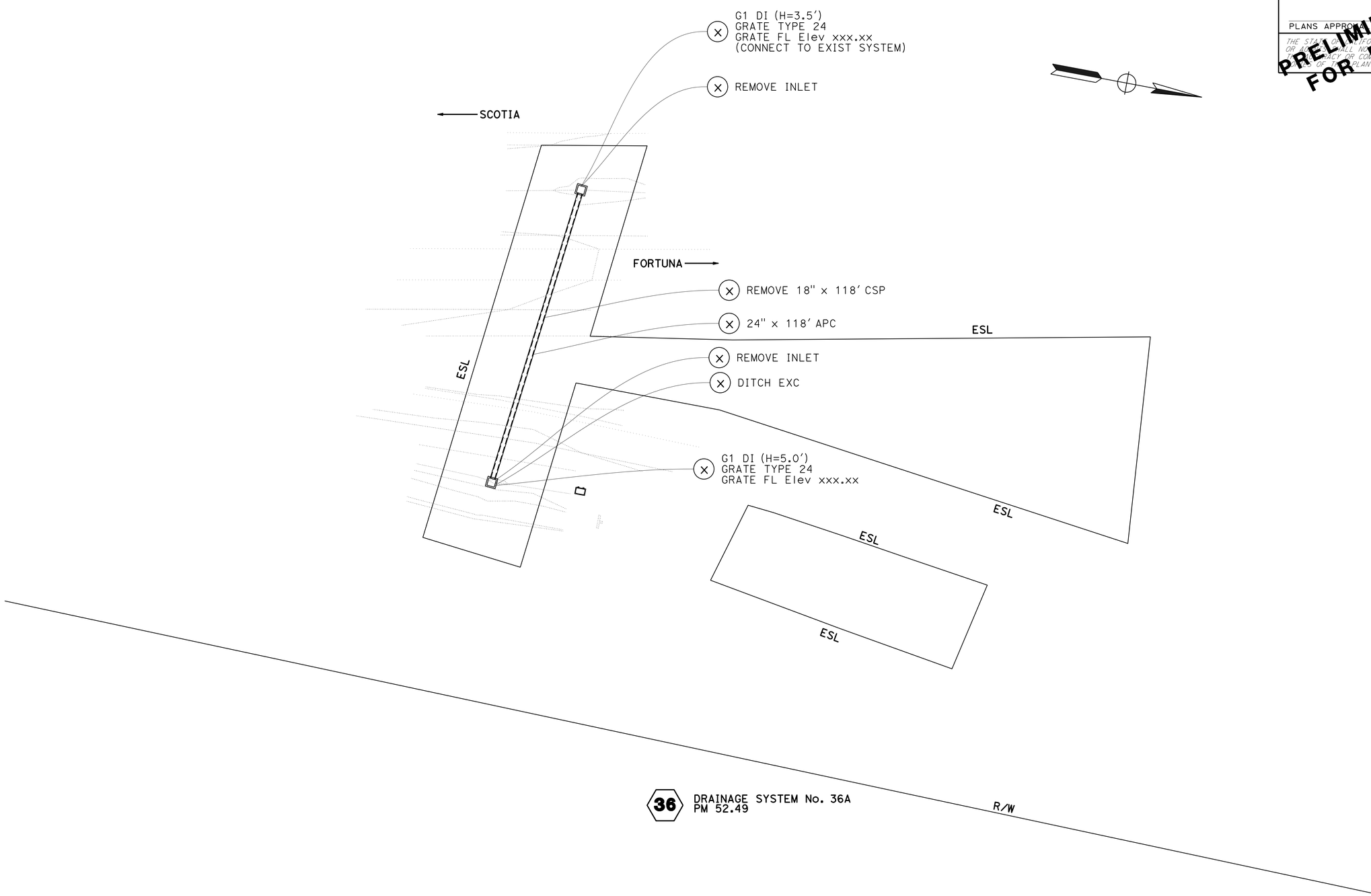

DRAINAGE LAYOUT

SCALE: 1" = 20'

D-36A

STATE OF CALIFORNIA - DEPARTMENT OF TRANSPORTATION

Caltrans

FUNCTIONAL SUPERVISOR: Matt Smith

CALCULATED-DESIGNED BY: Daniel Anderson

CHECKED BY

REVISED BY

DATE REVISED

LAST REVISION 10-26-22

DATE PLOTTED => 26-OCT-2022

TIME PLOTTED => 13:50

BORDER LAST REVISED 8/5/2020

USERNAME =>

DGN FILE => 0117000245ia000_PM 52.92A.dgn

RELATIVE BORDER SCALE IS IN INCHES 0 1 2 3

UNIT 0312

PROJECT NUMBER & PHASE 01160000351

Dist	COUNTY	LOCATION CODE	POST MILES TOTAL PROJECT	SHEET No.	TOTAL SHEETS
01	HUM	101			78

REGISTERED CIVIL ENGINEER DATE

PLANS APPROVAL DATE

THE STATE OF CALIFORNIA, ITS OFFICERS OR AGENTS SHALL NOT BE RESPONSIBLE FOR THE ACCURACY OR COMPLETENESS OF SCANNED IMAGES OF THIS PLAN SHEET.

REGISTERED PROFESSIONAL ENGINEER No. Exp. CIVIL STATE OF CALIFORNIA

PRELIMINARY DESIGN ONLY FOR REVIEW

NOTE:

POTHOLING IS REQUIRED TO VERIFY LOCATION OF JUNCTION BOXES

VERIFY LOCATION AND LENGTHS OF JUNCTION BOXES AND CULVERTS

REMOVE JUNCTION BOX

xx JUNCTION BOX (H=x.x′)
(CONNECT TO EXISTING SYSTEM)

REMOVE 60" x 365′ CSP

60" x 365′ APC
(APPROXIMATE LENGTH)

REMOVE JUNCTION BOX

xx JUNCTION BOX (H=x.x′)
(CONNECT TO EXISTING SYSTEM)

R/W

ESL

SCOTIA

FORTUNA

REMOVE INLET

xx DI (H=x.x′)
GRATE TYPE xxxx
GRATE FL Elev xxx.xx
(CONNECT TO EXISTING SYSTEM)

REMOVE 18" x 25′ CSP

24" x 25′ APC

ESL

R/W

36 DRAINAGE SYSTEM No. 36B
PM 52.92

DRAINAGE LAYOUT

SCALE: 1" = 50′ **D-36B**

CALCULATED-DESIGNED BY	REVISED BY	DATE REVISED
CHECKED BY	Daniel Anderson	

FUNCTIONAL SUPERVISOR: Matt Smith

STATE OF CALIFORNIA - DEPARTMENT OF TRANSPORTATION
Caltrans

LAST REVISION DATE PLOTTED => 26-OCT-2022
TIME PLOTTED => 13:50
10-26-22

BORDER LAST REVISED 8/5/2020

USERNAME =>
DGN FILE => 01170002451a000_PM 52.92B.dgn

RELATIVE BORDER SCALE IS IN INCHES 0 1 2 3

UNIT 0312

PROJECT NUMBER & PHASE 01160000351

Dist	COUNTY	LOCATION CODE	POST MILES TOTAL PROJECT	SHEET No.	TOTAL SHEETS
01	HUM	101			78

REGISTERED CIVIL ENGINEER DATE

PLANS APPROVAL DATE

THE STATE OF CALIFORNIA, ITS OFFICERS OR AGENTS SHALL NOT BE RESPONSIBLE FOR THE ACCURACY OR COMPLETENESS OF SCANNED COPIES OF THIS PLAN SHEET.

REGISTERED PROFESSIONAL ENGINEER No. Exp. CIVIL STATE OF CALIFORNIA

PRELIMINARY DESIGN ONLY FOR REVIEW

NOTE:
AN ENCROACHMENT PERMIT WILL NEED TO BE ACQUIRED BY THE CONTRACTOR FOR ACCESS ALONG BELLEVIEW AVE, CITY OF RIO DELL

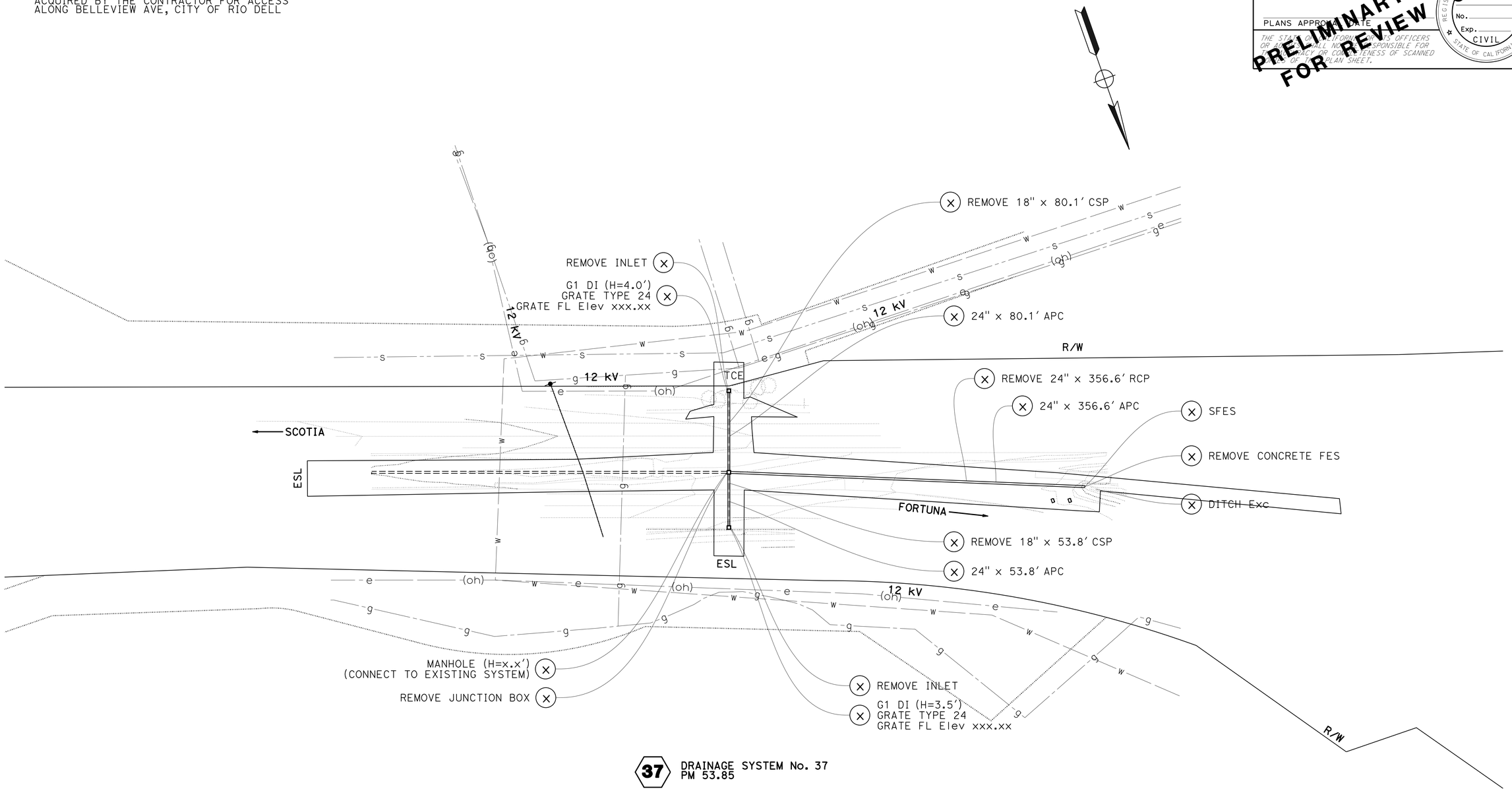

37 DRAINAGE SYSTEM No. 37
PM 53.85

DRAINAGE LAYOUT

SCALE: 1" = 50'

D-37

LAST REVISION 10-26-22
DATE PLOTTED => 26-OCT-2022
TIME PLOTTED => 13:50

REVISED BY | DATE REVISED
CALCULATED-DESIGNED BY: Daniel Anderson | CHECKED BY
FUNCTIONAL SUPERVISOR: Matt Smith
STATE OF CALIFORNIA - DEPARTMENT OF TRANSPORTATION
Caltrans

BORDER LAST REVISED 8/5/2020
USERNAME =>
DGN FILE => 01170000245ia000_PM 53.85.dgn
RELATIVE BORDER SCALE IS IN INCHES 0 1 2 3
UNIT 0312
PROJECT NUMBER & PHASE 01160000351

Dist	COUNTY	LOCATION CODE	POST MILES TOTAL PROJECT	SHEET No.	TOTAL SHEETS
01	HUM	101			78

REGISTERED CIVIL ENGINEER DATE

PLANS APPROVAL DATE

THE STATE OF CALIFORNIA, ITS OFFICERS OR AGENTS SHALL NOT BE RESPONSIBLE FOR THE ACCURACY OR COMPLETENESS OF SCANNED COPIES OF THIS PLAN SHEET.

REGISTERED PROFESSIONAL ENGINEER No. Exp. CIVIL STATE OF CALIFORNIA

PRELIMINARY DESIGN ONLY FOR REVIEW

NOTE:

FLOW LINE ALIGNMENT "PM 0.88" USED FOR STATION CALLOUTS.

SAME FOOTING USED FOR CULVERT, STRAIGHT HEADWALL, AND WINGWALL.

STREAMBED MATERIAL IS PLACED BETWEEN CULVERT'S FOOTING.

FG GRADES BEGIN AT ETW AND FINISH AT HEADWALL

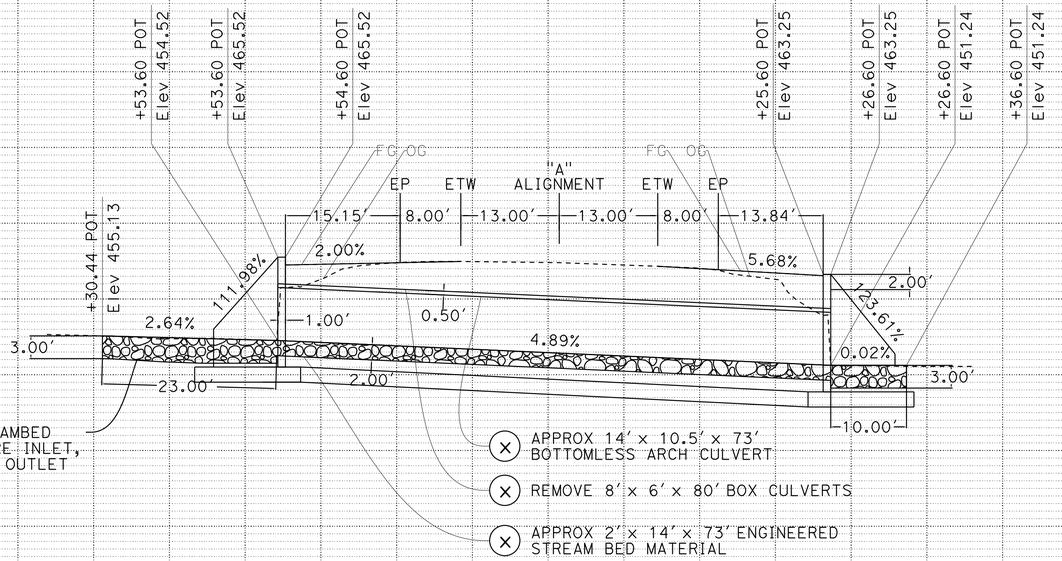

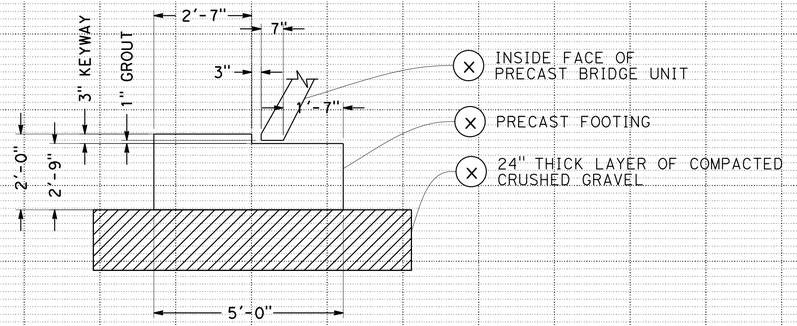

PRECAST FOOTING DETAIL

NO SCALE

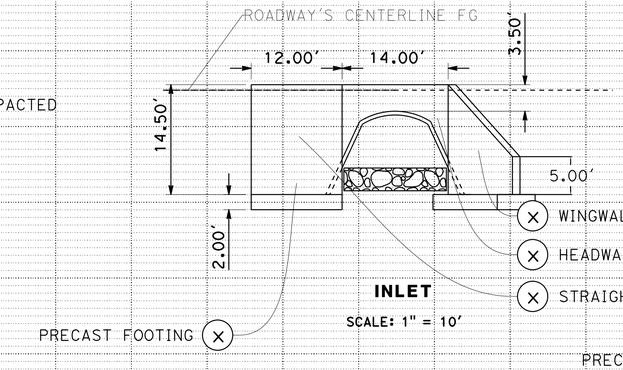

INLET

SCALE: 1" = 10′

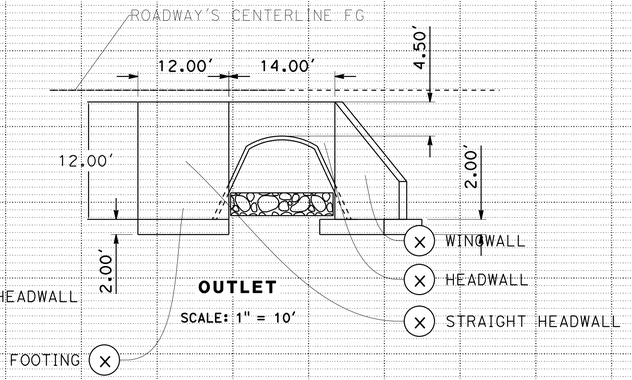

OUTLET

SCALE: 1" = 10′

DRAINAGE SYSTEM No. 1

PM 0.88

DRAINAGE PROFILES

SCALE: 1" = 10′ **DP-1**

STATE OF CALIFORNIA - DEPARTMENT OF TRANSPORTATION

Caltrans

FUNCTIONAL SUPERVISOR: Matt Smith

CALCULATED-DESIGNED BY

CHECKED BY

Daniel Anderson

REVISED BY

DATE REVISED

LAST REVISION DATE PLOTTED => 26-OCT-2022
TIME PLOTTED => 13:51
10-26-22

BORDER LAST REVISED 8/5/2020

USERNAME =>
DGN FILE => 01170000245ib000_PM 0.88.dgn

RELATIVE BORDER SCALE IS IN INCHES 0 1 2 3

UNIT 0312

PROJECT NUMBER & PHASE 01160000351

Dist	COUNTY	LOCATION CODE	POST MILES TOTAL PROJECT	SHEET No.	TOTAL SHEETS
01	HUM	101			78

REGISTERED CIVIL ENGINEER DATE

PLANS APPROVAL DATE

THE STATE OF CALIFORNIA, ITS OFFICERS OR AGENTS SHALL NOT BE RESPONSIBLE FOR THE ACCURACY OR COMPLETENESS OF SCANNED COPIES OF THIS PLAN SHEET.

REGISTERED PROFESSIONAL ENGINEER No. Exp. CIVIL STATE OF CALIFORNIA

PRELIMINARY DESIGN ONLY FOR REVIEW

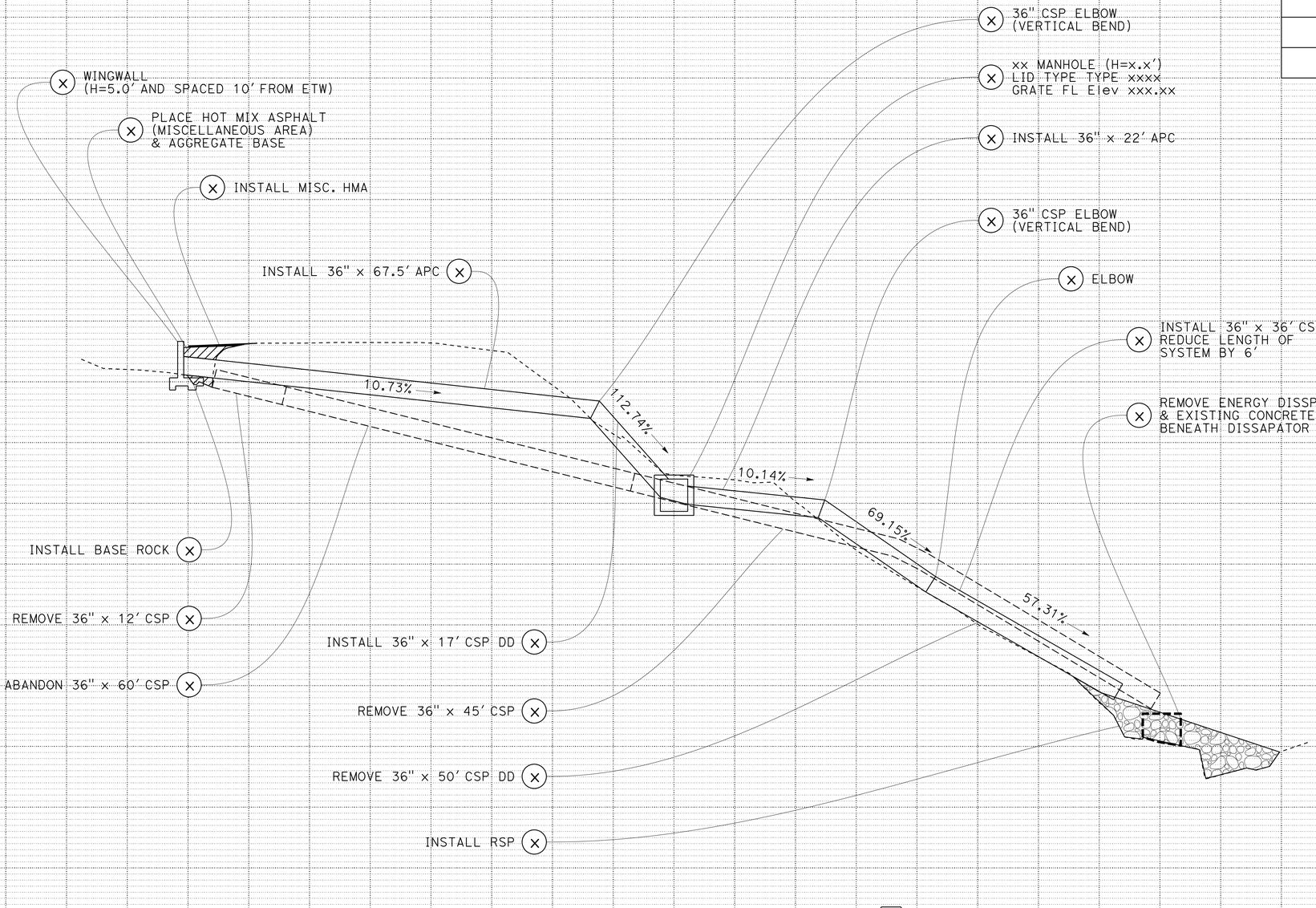

DRAINAGE SYSTEM No. 2

PM 2.40

DRAINAGE PROFILES

SCALE: 1" = 10'

DP-2

REVISED BY | DATE REVISED

Daniel Anderson

CALCULATED-DESIGNED BY | CHECKED BY

FUNCTIONAL SUPERVISOR

Matt Smith

STATE OF CALIFORNIA - DEPARTMENT OF TRANSPORTATION

Caltrans

LAST REVISION 10-26-22 | DATE PLOTTED => 26-OCT-2022 | TIME PLOTTED => 13:51

BORDER LAST REVISED 8/5/2020 | USERNAME => | DGN FILE => 0117000245ib000_PM 2.40.dgn | RELATIVE BORDER SCALE IS IN INCHES 0 1 2 3 | UNIT 0312 | PROJECT NUMBER & PHASE 01160000351

Dist	COUNTY	LOCATION CODE	POST MILES TOTAL PROJECT	SHEET No.	TOTAL SHEETS
01	HUM	101		24	78

REGISTERED CIVIL ENGINEER DATE

PLANS APPROVAL DATE

THE STATE OF CALIFORNIA, ITS OFFICERS OR AGENTS SHALL NOT BE RESPONSIBLE FOR THE ACCURACY OR COMPLETENESS OF SCANNED COPIES OF THIS PLAN SHEET.

REGISTERED PROFESSIONAL ENGINEER No. Exp. CIVIL STATE OF CALIFORNIA

PRELIMINARY DESIGN ONLY FOR REVIEW

NOTE:
ENGINEERING SHORING PLAN WILL BE REQUIRED TO INSTALL PROPOSED CSP, DEPTH OF CUT IS APROX. 25 5/32

MATCH LINE

-3.50%

Misc. CONCRETE (REPLACE CONCRETE LINED DITCH IN-KIND)

SFES

REMOVE 42" x 30' CSP

ABANDON Culv 42" x 425' CSP

INSTALL 42" x 320' APC

MATCH LINE

REMOVE DI

xx DI (H=x.x') GRATE TYPE xxxx GRATE FL Elev xxx.xx

INSTALL 42" x 60' APC

42" CSP ELBOW

INSTALL 42" x 45' CSP DD

INSTALL ELBOW

INSTALL 42" x 40' CSP DD

-86.32%

-3.88%

-62.15%

-6.21%

-16.02%

CABLE ANCHORAGE SYSTEM

CABLE ANCHORAGE SYSTEM

REMOVE 12" x 8' CSP

ABANDON 12" x 15' CSP

RSP

REMOVE 42" x 20' CSP

DRAINAGE SYSTEM No. 3

PM 7.51

DRAINAGE PROFILES

SCALE: 1" = 10'

DP-3

REVISED BY	DATE REVISED
Daniel Anderson	

CALCULATED-DESIGNED BY

CHECKED BY

FUNCTIONAL SUPERVISOR: Matt Smith

STATE OF CALIFORNIA - DEPARTMENT OF TRANSPORTATION

Caltrans

LAST REVISION DATE PLOTTED => 26-OCT-2022
TIME PLOTTED => 13:51
10-26-22

BORDER LAST REVISED 8/5/2020

USERNAME =>
DGN FILE => 01170002451b000_PM 7.51.dgn

RELATIVE BORDER SCALE IS IN INCHES 0 1 2 3

UNIT 0312

PROJECT NUMBER & PHASE 01160000351

Dist	COUNTY	LOCATION CODE	POST MILES TOTAL PROJECT	SHEET No.	TOTAL SHEETS
01	HUM	101			78

REGISTERED CIVIL ENGINEER DATE

PLANS APPROVAL DATE

THE STATE OF CALIFORNIA, ITS OFFICERS OR AGENTS SHALL NOT BE RESPONSIBLE FOR THE ACCURACY OR COMPLETENESS OF SCANNED COPIES OF THIS PLAN SHEET.

REGISTERED PROFESSIONAL ENGINEER No. Exp. CIVIL STATE OF CALIFORNIA

PRELIMINARY DESIGN ONLY FOR REVIEW

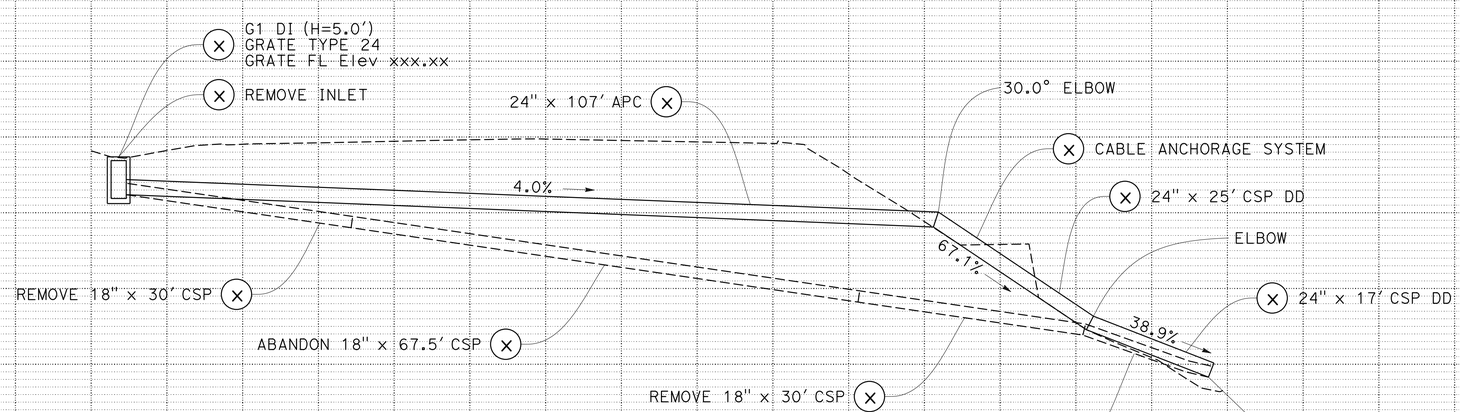

DRAINAGE SYSTEM No. 4

PM 13.39

DRAINAGE PROFILES

SCALE: 1" = 10'

DP-4

REVISED BY | DATE REVISED

Daniel Anderson

CALCULATED-DESIGNED BY | CHECKED BY

FUNCTIONAL SUPERVISOR: Matt Smith

STATE OF CALIFORNIA - DEPARTMENT OF TRANSPORTATION

Caltrans

LAST REVISION | DATE PLOTTED => 26-OCT-2022 | TIME PLOTTED => 13:51 | 10-26-22

BORDER LAST REVISED 8/5/2020

USERNAME =>
DGN FILE => 0117000245ib000_PM 13.39.dgn

RELATIVE BORDER SCALE IS IN INCHES 0 1 2 3

UNIT 0312

PROJECT NUMBER & PHASE 01160000351

Dist	COUNTY	LOCATION CODE	POST MILES TOTAL PROJECT	SHEET No.	TOTAL SHEETS
01	HUM	101		44	78

REGISTERED CIVIL ENGINEER DATE

PLANS APPROVAL DATE

THE STATE OF CALIFORNIA OR ITS OFFICERS OR AGENTS SHALL NOT BE RESPONSIBLE FOR THE ACCURACY OR COMPLETENESS OF SCANNED VERSIONS OF THIS PLAN SHEET.

PRELIMINARY DESIGN FOR REVIEW ONLY

REGISTERED PROFESSIONAL ENGINEER No. Exp. CIVIL STATE OF CALIFORNIA

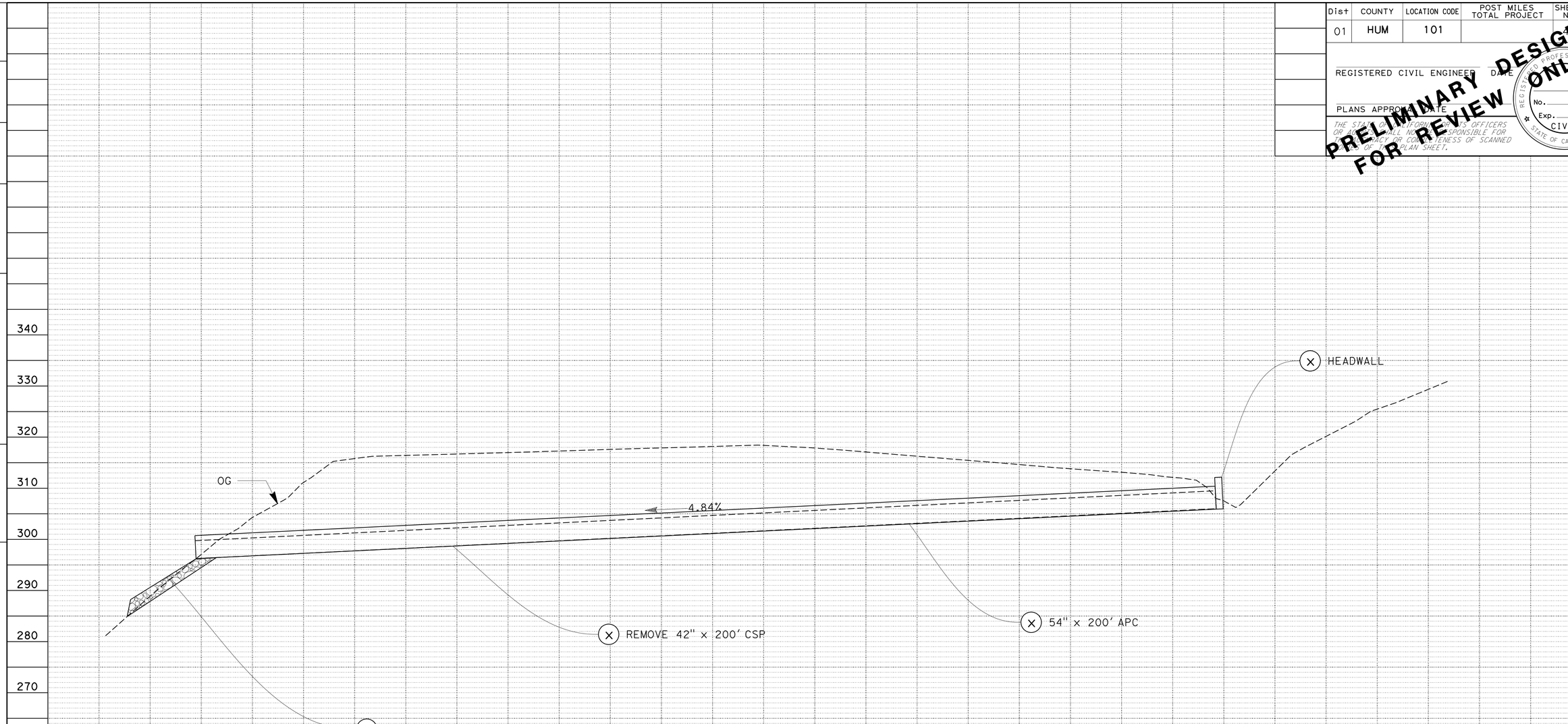

DRAINAGE SYSTEM No. 5

PM 15.64

DRAINAGE PROFILES

SCALE: 1" = 10'

DP-5

REVISED BY | DATE REVISED

Daniel Anderson

CALCULATED-DESIGNED BY | CHECKED BY

FUNCTIONAL SUPERVISOR: Matt Smith

STATE OF CALIFORNIA - DEPARTMENT OF TRANSPORTATION

Caltrans

DATE PLOTTED => 26-OCT-2022
TIME PLOTTED => 13:51

LAST REVISION 10-26-22

Dist	COUNTY	LOCATION CODE	POST MILES TOTAL PROJECT	SHEET No.	TOTAL SHEETS
01	HUM	101			78

REGISTERED CIVIL ENGINEER DATE

PLANS APPROVAL DATE

THE STATE OF CALIFORNIA, ITS OFFICERS OR AGENTS SHALL NOT BE RESPONSIBLE FOR THE ACCURACY OR COMPLETENESS OF SCANNED IMAGES OF THIS PLAN SHEET.

PRELIMINARY DESIGN ONLY FOR REVIEW

REGISTERED PROFESSIONAL ENGINEER No. Exp. CIVIL STATE OF CALIFORNIA

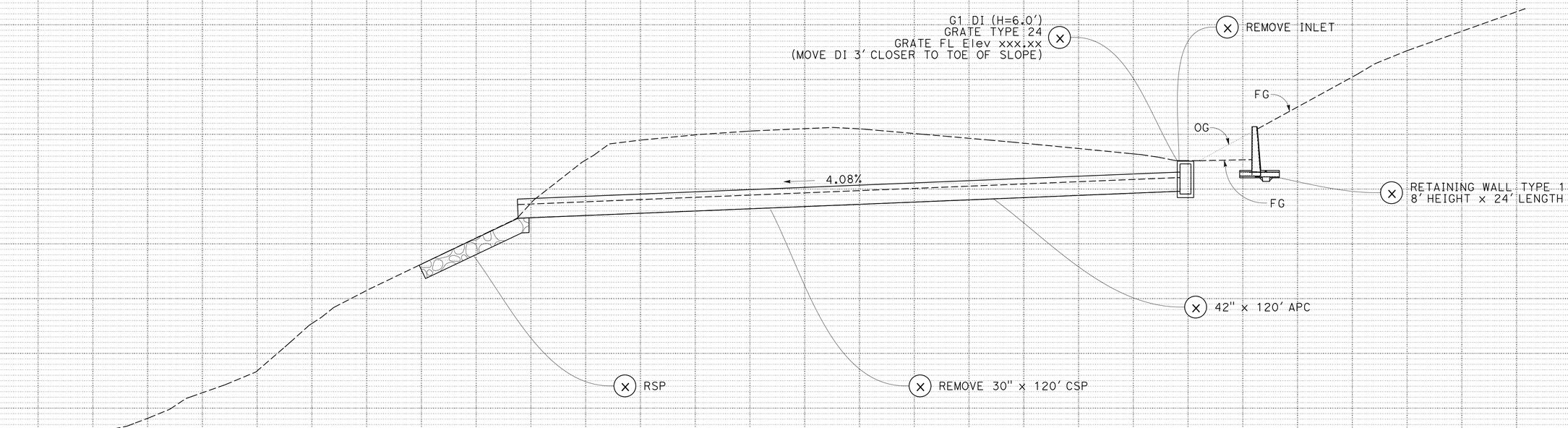

DRAINAGE SYSTEM No. 6

PM 16.09

DRAINAGE PROFILES

SCALE: 1" = 10'

DP-6

REVISED BY | DATE REVISED

CALCULATED-DESIGNED BY: Daniel Anderson

CHECKED BY

FUNCTIONAL SUPERVISOR: Matt Smith

STATE OF CALIFORNIA - DEPARTMENT OF TRANSPORTATION

Caltrans

LAST REVISION | DATE PLOTTED => 26-OCT-2022 | TIME PLOTTED => 13:51 | 10-26-22

BORDER LAST REVISED 8/5/2020 | USERNAME => | DGN FILE => 01170002451b000_PM 16.09.dgn | RELATIVE BORDER SCALE IS IN INCHES 0 1 2 3 | UNIT 0312 | PROJECT NUMBER & PHASE 01160000351

Dist	COUNTY	LOCATION CODE	POST MILES TOTAL PROJECT	SHEET No.	TOTAL SHEETS
01	HUM	101		77	78

REGISTERED CIVIL ENGINEER DATE

PLANS APPROVAL DATE

THE STATE OF CALIFORNIA, ITS OFFICERS OR AGENTS SHALL NOT BE RESPONSIBLE FOR THE ACCURACY OR COMPLETENESS OF SCANNED COPIES OF THIS PLAN SHEET.

REGISTERED PROFESSIONAL ENGINEER No. Exp. CIVIL STATE OF CALIFORNIA

PRELIMINARY DESIGN ONLY FOR REVIEW

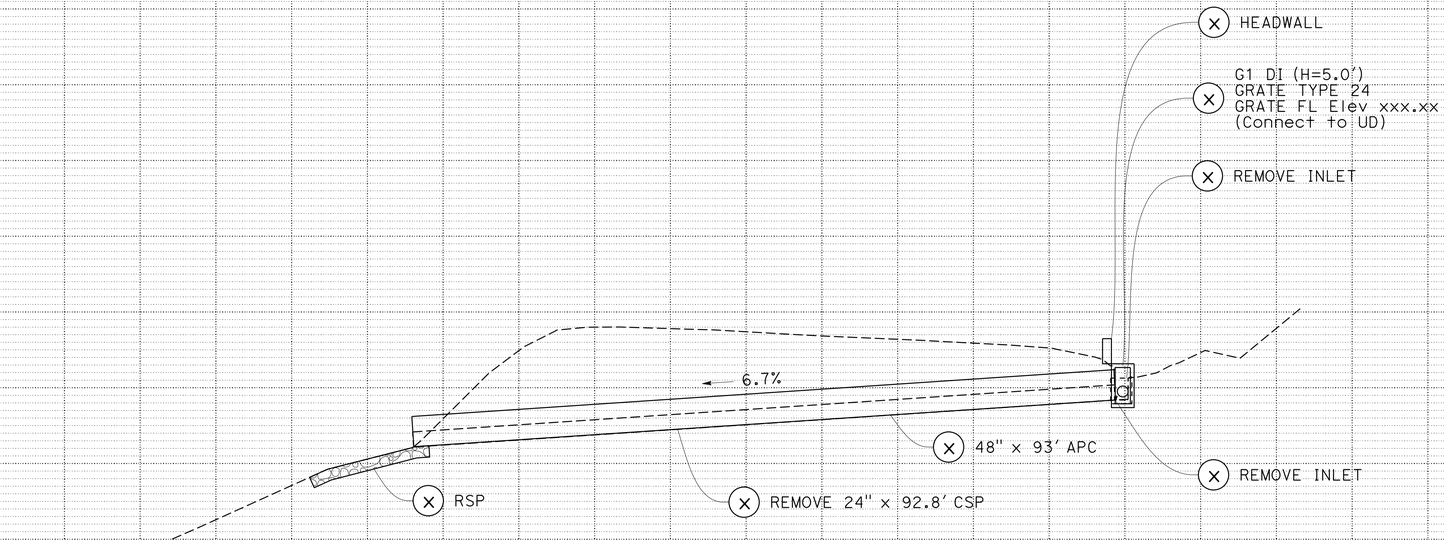

DRAINAGE SYSTEM No. 7

PM 16.44

DRAINAGE PROFILES

SCALE: 1" = 10'

DP-7

REVISED BY | DATE REVISED

Daniel Anderson

CALCULATED-DESIGNED BY | CHECKED BY

FUNCTIONAL SUPERVISOR

Matt Smith

STATE OF CALIFORNIA - DEPARTMENT OF TRANSPORTATION

Caltrans

BORDER LAST REVISED 8/5/2020

USERNAME =>
DGN FILE => 01170000245ib000_PM 16.44.dgn

RELATIVE BORDER SCALE IS IN INCHES 0 1 2 3

UNIT 0312

PROJECT NUMBER & PHASE 01160000351

LAST REVISION DATE PLOTTED => 26-OCT-2022
TIME PLOTTED => 13:51
10-26-22

Dist	COUNTY	LOCATION CODE	POST MILES TOTAL PROJECT	SHEET No.	TOTAL SHEETS
01	HUM	101			78

REGISTERED CIVIL ENGINEER DATE

PLANS APPROVAL DATE

THE STATE OF CALIFORNIA, ITS OFFICERS OR AGENTS SHALL NOT BE RESPONSIBLE FOR THE ACCURACY OR COMPLETENESS OF SCANNED COPIES OF THIS PLAN SHEET.

REGISTERED PROFESSIONAL ENGINEER No. Exp. CIVIL STATE OF CALIFORNIA

PRELIMINARY DESIGN ONLY FOR REVIEW

EMBANKMENT (AROUND NEW SFES)

ELBOW

CABLE ANCHORAGE SYSTEM

60.1%

24" SFES

REMOVE SFES

65.1%

24" x 172.5' CSP DD

REMOVE DD 18" x 172.5' CSP DD

G1 DI (H=5.5') GRATE TYPE 24 GRATE FL Elev xxx.xx

REMOVE INLET

MATCH LINE

REMOVE 30" x 35' CSP

22.5° ELBOW (Vert BEND)

36" x 140' APC

CABLE ANCHORAGE SYSTEM

3.1%

MATCH LINE

36" x 77' CSP DD

45.6%

45.5%

ABANDON 30" x 148' CSP

16.0%

REMOVE 30" x 35' CSP

15.5° ELBOW (Vert BEND)

DRAINAGE SYSTEM No. 8

PM 17.54

DRAINAGE PROFILES

SCALE: 1" = 10'

DP-8

REVISED BY | DATE REVISED

CALCULATED-DESIGNED BY: Daniel Anderson

CHECKED BY

FUNCTIONAL SUPERVISOR: Matt Smith

STATE OF CALIFORNIA - DEPARTMENT OF TRANSPORTATION

Caltrans

LAST REVISION | DATE PLOTTED => 26-OCT-2022 | TIME PLOTTED => 13:51

10-26-22

BORDER LAST REVISED 8/5/2020

USERNAME =>

DGN FILE => 01170002451b000_PM 17.54.dgn

RELATIVE BORDER SCALE IS IN INCHES 0 1 2 3

UNIT 0312

PROJECT NUMBER & PHASE 01160000351

Dist	COUNTY	LOCATION CODE	POST MILES TOTAL PROJECT	SHEET No.	TOTAL SHEETS
01	HUM	101			78

REGISTERED CIVIL ENGINEER DATE

PLANS APPROVAL DATE

THE STATE OF CALIFORNIA, ITS OFFICERS OR AGENTS SHALL NOT BE RESPONSIBLE FOR THE ACCURACY OR COMPLETENESS OF SCANNED COPIES OF THIS PLAN SHEET.

REGISTERED PROFESSIONAL ENGINEER No. Exp. CIVIL STATE OF CALIFORNIA

PRELIMINARY DESIGN ONLY FOR REVIEW

REVISED BY | DATE REVISED

Daniel Anderson

CALCULATED-DESIGNED BY | CHECKED BY

FUNCTIONAL SUPERVISOR

Matt Smith

STATE OF CALIFORNIA - DEPARTMENT OF TRANSPORTATION

Caltrans

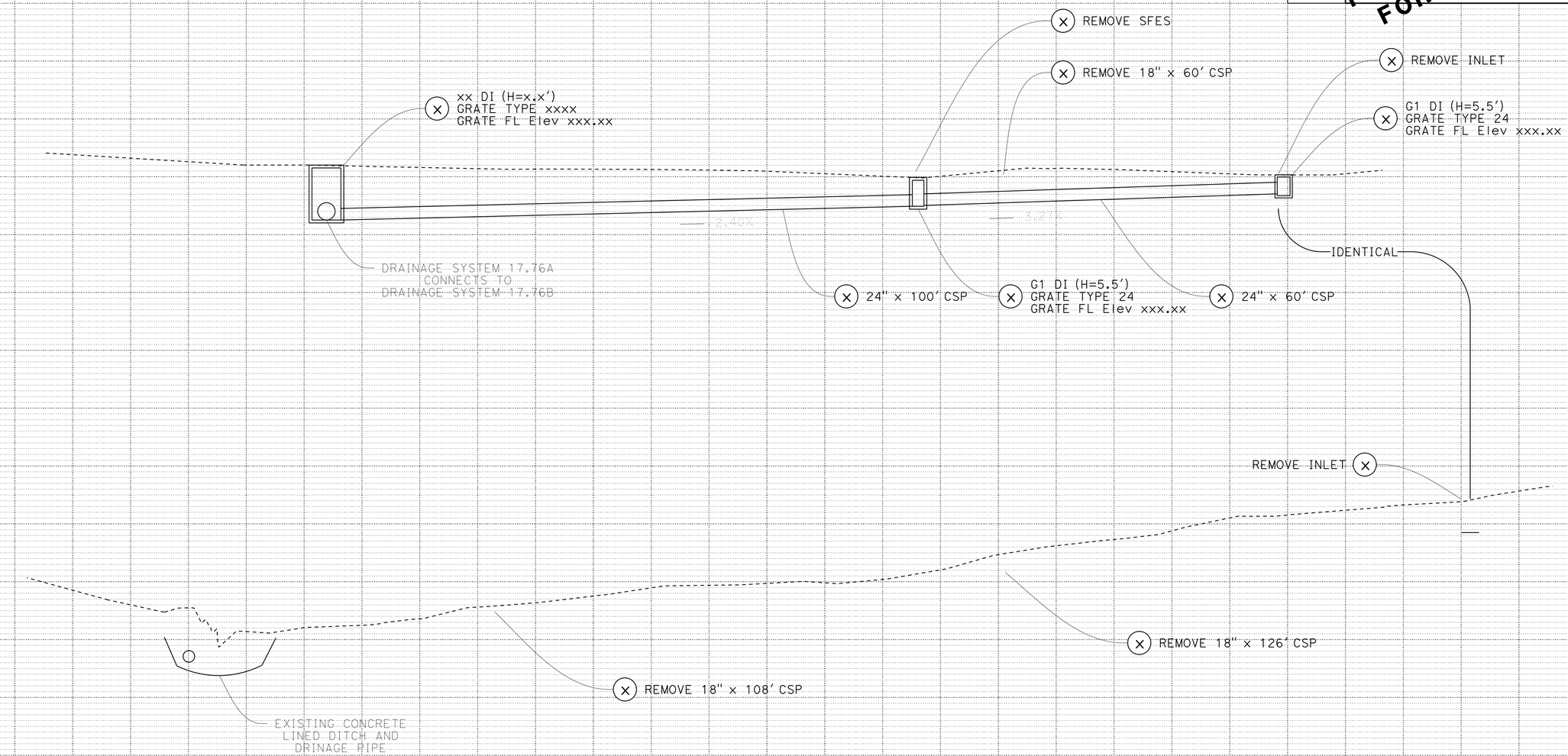

DRAINAGE SYSTEM No. 9

PM 17.76A

DRAINAGE PROFILES

SCALE: 1" = 10'

DP-9A

LAST REVISION | DATE PLOTTED => 26-OCT-2022
10-26-22 | TIME PLOTTED => 13:51

BORDER LAST REVISED 8/5/2020

USERNAME =>
DGN FILE => 01170002451b000_PM 17.76A.dgn

RELATIVE BORDER SCALE IS IN INCHES 0 1 2 3

UNIT 0312

PROJECT NUMBER & PHASE 01160000351

Dist	COUNTY	LOCATION CODE	POST MILES TOTAL PROJECT	SHEET No.	TOTAL SHEETS
01	HUM	101			78

REGISTERED CIVIL ENGINEER DATE

PLANS APPROVAL DATE

THE STATE OF CALIFORNIA, ITS OFFICERS OR AGENTS SHALL NOT BE RESPONSIBLE FOR THE ACCURACY OR COMPLETENESS OF SCANNED COPIES OF THIS PLAN SHEET.

REGISTERED PROFESSIONAL ENGINEER No. Exp. CIVIL STATE OF CALIFORNIA

PRELIMINARY DESIGN ONLY FOR REVIEW

24" SFES

INSTALL ELBOW

24" x 18' CSP DD

CABLE ANCHORAGE SYSTEM

24" x 30' CSP DD

REMOVE DD
18" x 50' CSP DD

IDENTICAL

MATCH LINE

36" x 110' CSP

REMOVE Culv
36" x 215' CSP

REMOVE INLET

G1 DI (H=6.5')
GRATE TYPE 24
GRATE FL Elev xxx.xx

DITCH Exc

24" x 150' CSP

REMOVE 18" x 190' CSP

G1 DI (H=4.0')
GRATE TYPE 24
GRATE FL Elev xxx.xx

REMOVE INLET

DITCH Exc

xx MH (H=x.x')
BOLTED STEEL PLATE
FG FL Elev xxx.xx

24" x 40' CSP

REMOVE INLET

xx DI (H=x.x')
GRATE TYPE xxxx
GRATE FL Elev xxx.xx

36" x 97' APC

TYPE X 36" GRATE

MATCH LINE

CONCRETE LINED DITCH
CREATE NEW SWALE WITHIN RW
(LOW POINT HAS 1' DEPTH)

EXISTING CULVERT
LINED DITCH AND
DRINAGE PIPE

DRAINAGE SYSTEM No. 9

PM 17.76B

DRAINAGE PROFILES

SCALE: 1" = 10'

DP-9B

REVISED BY | DATE REVISED

Daniel Anderson

CALCULATED-DESIGNED BY | CHECKED BY

FUNCTIONAL SUPERVISOR

Matt Smith

STATE OF CALIFORNIA - DEPARTMENT OF TRANSPORTATION

Caltrans

LAST REVISION | DATE PLOTTED => 26-OCT-2022
10-26-22 | TIME PLOTTED => 13:51

BORDER LAST REVISED 8/5/2020

USERNAME =>
DGN FILE => 01170000245ib000_PM 17.76B.dgn

RELATIVE BORDER SCALE IS IN INCHES 0 1 2 3

UNIT 0312

PROJECT NUMBER & PHASE 01160000351

Dist	COUNTY	LOCATION CODE	POST MILES TOTAL PROJECT	SHEET No.	TOTAL SHEETS
01	HUM	101			78

REGISTERED CIVIL ENGINEER DATE

PLANS APPROVAL DATE

THE STATE OF CALIFORNIA, ITS OFFICERS OR AGENTS SHALL NOT BE RESPONSIBLE FOR THE ACCURACY OR COMPLETENESS OF SCANNED COPIES OF THIS PLAN SHEET.

REGISTERED PROFESSIONAL ENGINEER No. Exp. CIVIL STATE OF CALIFORNIA

PRELIMINARY DESIGN ONLY FOR REVIEW

SFES

ELBOW

18.8%

MATCH LINE

48.4%

2.4%

G1 DI (H=5.5')
GRATE TYPE 24
GRATE FL Elev xxx.xx
(CONNECT TO EXIST. UD)

REMOVE INLET

24" x 75' APC

REMOVE 24" x 75' CSP

23° ELBOW
(Vert BEND)

CABLE ANCHORAGE SYSTEM

REMOVE DD
24" x 91.5' CSP DD

24" x 91.5' CSP DD

43.3%

RSP

24" x 270' CSP DD
APROX.
NEED LARGER SURVEY

REMOVE DD
24" x 270' CSP DD, APROX.
NEED LARGER SURVEY

48.4%

MATCH LINE

410 400 390 380 370 360 350 300 290 280 270 260 250 240 230

DRAINAGE SYSTEM No. 10

PM 18.25

DRAINAGE PROFILES

SCALE: 1" = 10'

DP-10

CALCULATED-DESIGNED BY

CHECKED BY

FUNCTIONAL SUPERVISOR Matt Smith

REVISED BY

DATE REVISED

Daniel Anderson

STATE OF CALIFORNIA - DEPARTMENT OF TRANSPORTATION

Caltrans

LAST REVISION DATE PLOTTED => 26-OCT-2022
TIME PLOTTED => 13:51

10-26-22

BORDER LAST REVISED 8/5/2020

USERNAME =>
DGN FILE => 01170002451b000_PM 18.25.dgn

RELATIVE BORDER SCALE IS IN INCHES 0 1 2 3

UNIT 0312

PROJECT NUMBER & PHASE 01160000351

Dist	COUNTY	LOCATION CODE	POST MILES TOTAL PROJECT	SHEET No.	TOTAL SHEETS
01	HUM	101			78

REGISTERED CIVIL ENGINEER DATE

PLANS APPROVAL DATE

THE STATE OF CALIFORNIA, ITS OFFICERS OR AGENTS SHALL NOT BE RESPONSIBLE FOR THE ACCURACY OR COMPLETENESS OF SCANNED IMAGES OF THIS PLAN SHEET.

REGISTERED PROFESSIONAL ENGINEER No. Exp. CIVIL STATE OF CALIFORNIA

PRELIMINARY DESIGN ONLY FOR REVIEW

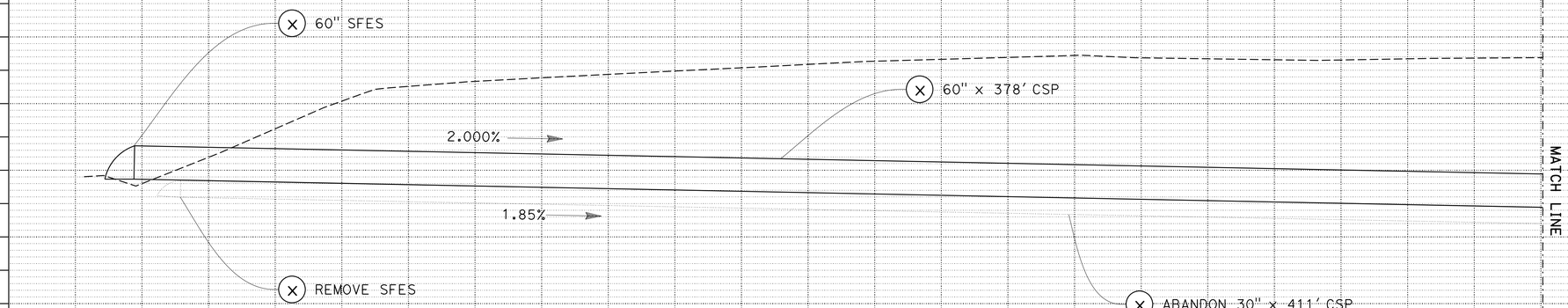

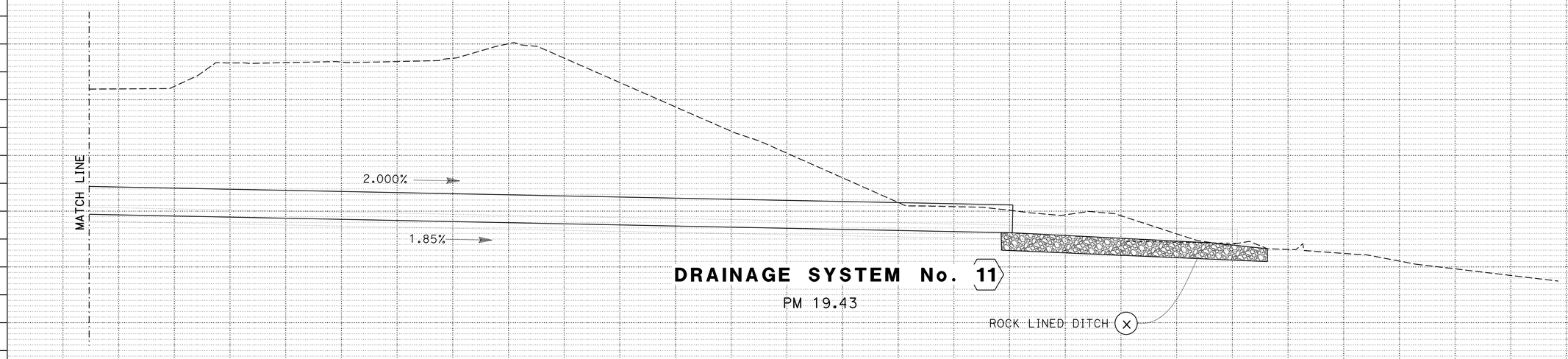

DRAINAGE SYSTEM No. 11

PM 19.43

DRAINAGE PROFILES

SCALE: 1" = 10'

DP-11

REVISED BY | DATE REVISED

Daniel Anderson

CALCULATED-DESIGNED BY | CHECKED BY

FUNCTIONAL SUPERVISOR

Matt Smith

STATE OF CALIFORNIA - DEPARTMENT OF TRANSPORTATION

Caltrans

LAST REVISION | DATE PLOTTED => 26-OCT-2022 | TIME PLOTTED => 13:51 | 10-26-22

BORDER LAST REVISED 8/5/2020

USERNAME =>
DGN FILE => 01170002451b000_PM 19.43.dgn

RELATIVE BORDER SCALE IS IN INCHES 0 1 2 3

UNIT 0312

PROJECT NUMBER & PHASE 01160000351

Dist	COUNTY	LOCATION CODE	POST MILES TOTAL PROJECT	SHEET No.	TOTAL SHEETS
01	HUM	101		78	

REGISTERED CIVIL ENGINEER DATE

PLANS APPROVAL DATE

THE STATE OF CALIFORNIA, ITS OFFICERS OR AGENTS SHALL NOT BE RESPONSIBLE FOR THE ACCURACY OR COMPLETENESS OF SCANNED COPIES OF THIS PLAN SHEET.

REGISTERED PROFESSIONAL ENGINEER No. Exp. CIVIL STATE OF CALIFORNIA

PRELIMINARY DESIGN ONLY FOR REVIEW

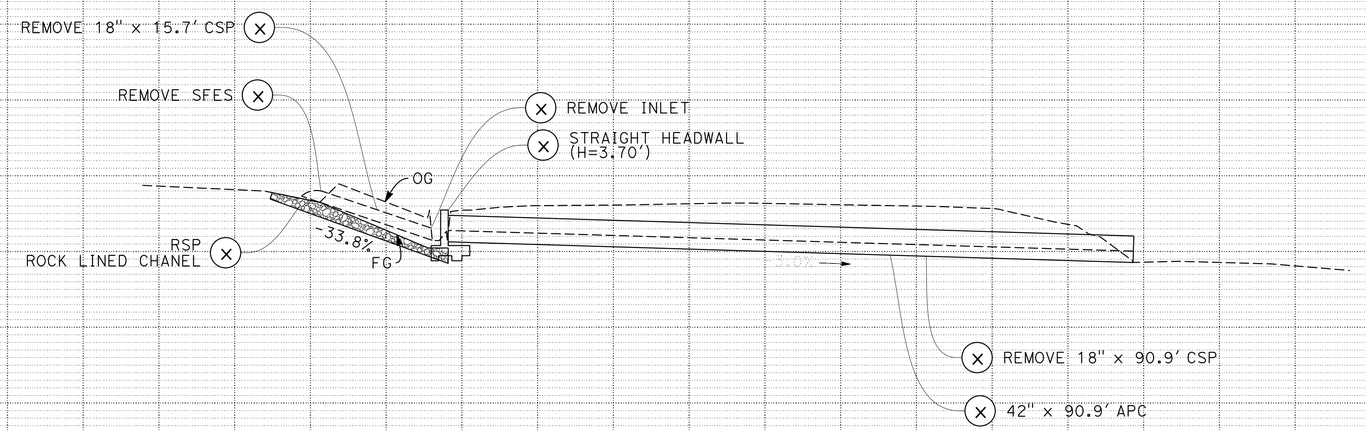

DRAINAGE SYSTEM No. 12

PM 20.63

DRAINAGE PROFILES

SCALE: 1" = 10'

DP-12

STATE OF CALIFORNIA - DEPARTMENT OF TRANSPORTATION

Caltrans

FUNCTIONAL SUPERVISOR: Matt Smith

CALCULATED-DESIGNED BY

CHECKED BY

REVISED BY

DATE REVISED

Daniel Anderson

LAST REVISION DATE PLOTTED => 26-OCT-2022
TIME PLOTTED => 13:51

BORDER LAST REVISED 8/5/2020

USERNAME =>
DGN FILE => 01170002451b000_PM 20.63.dgn

RELATIVE BORDER SCALE IS IN INCHES 0 1 2 3

UNIT 0312

PROJECT NUMBER & PHASE 01160000351

Dist	COUNTY	LOCATION CODE	POST MILES TOTAL PROJECT	SHEET No.	TOTAL SHEETS
01	HUM	101			78

REGISTERED CIVIL ENGINEER DATE

PLANS APPROVAL DATE

THE STATE OF CALIFORNIA, ITS OFFICERS OR AGENTS SHALL NOT BE RESPONSIBLE FOR THE ACCURACY OR COMPLETENESS OF SCANNED IMAGES OF THIS PLAN SHEET.

REGISTERED PROFESSIONAL ENGINEER No. Exp. CIVIL STATE OF CALIFORNIA

PRELIMINARY DESIGN ONLY FOR REVIEW

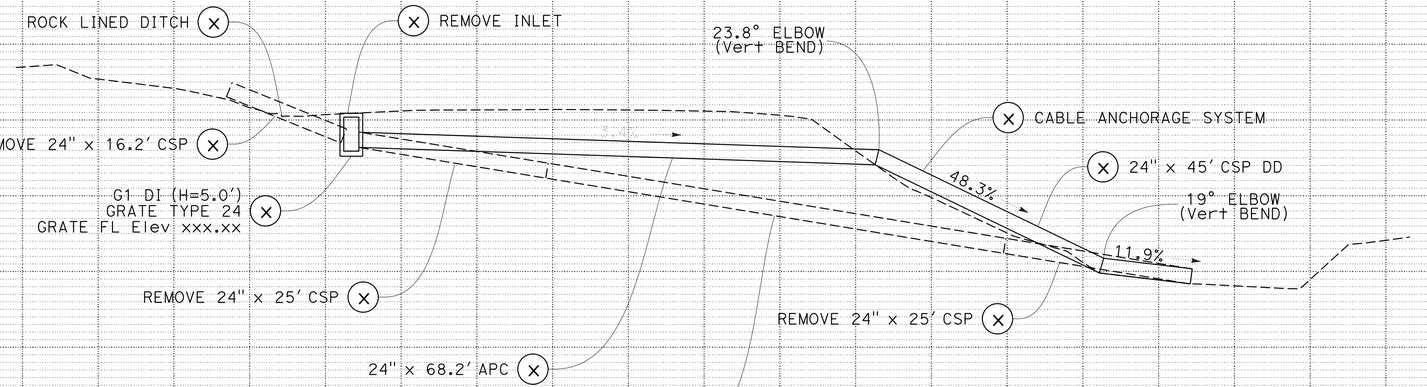

DRAINAGE SYSTEM No. 13

PM 23.46

DRAINAGE PROFILES

SCALE: 1" = 10'

DP-13

STATE OF CALIFORNIA - DEPARTMENT OF TRANSPORTATION

Caltrans

FUNCTIONAL SUPERVISOR: Matt Smith

CALCULATED-DESIGNED BY

CHECKED BY

DETAILED BY

REVISED BY

DATE REVISED

Daniel Anderson

LAST REVISION DATE PLOTTED => 26-OCT-2022
TIME PLOTTED => 13:52
10-26-22

BORDER LAST REVISED 8/5/2020

USERNAME =>
DGN FILE => 0117000245ib000_PM 23.46.dgn

RELATIVE BORDER SCALE IS IN INCHES 0 1 2 3

UNIT 0312

PROJECT NUMBER & PHASE 01160000351

Dist	COUNTY	LOCATION CODE	POST MILES TOTAL PROJECT	SHEET No.	TOTAL SHEETS
01	HUM	101			78

REGISTERED CIVIL ENGINEER DATE

PLANS APPROVAL DATE

THE STATE OF CALIFORNIA, ITS OFFICERS OR AGENTS SHALL NOT BE RESPONSIBLE FOR THE ACCURACY OR COMPLETENESS OF SCANNED COPIES OF THIS PLAN SHEET.

REGISTERED PROFESSIONAL ENGINEER No. Exp. CIVIL STATE OF CALIFORNIA

PRELIMINARY DESIGN ONLY FOR REVIEW

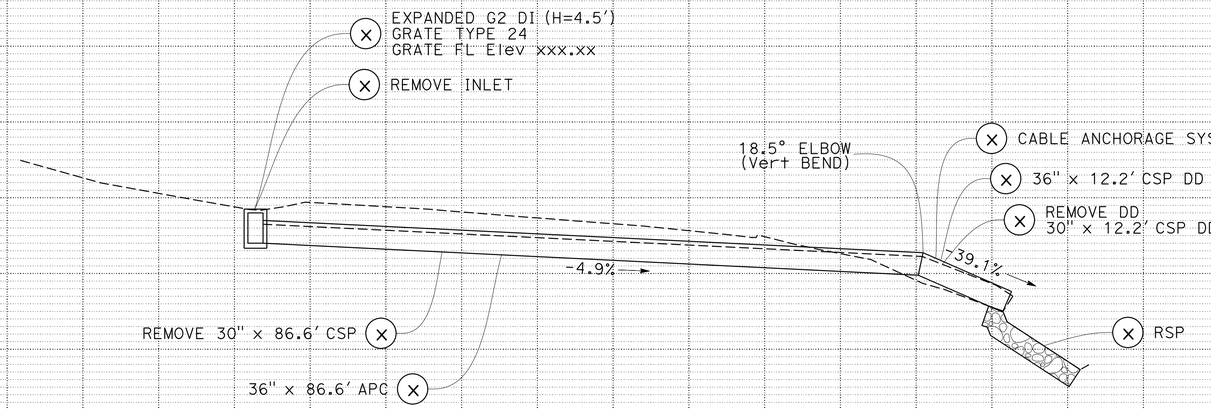

DRAINAGE SYSTEM No. 14

PM 26.16

DRAINAGE PROFILES

SCALE: 1" = 10'

DP-14

STATE OF CALIFORNIA - DEPARTMENT OF TRANSPORTATION

Caltrans

FUNCTIONAL SUPERVISOR: Matt Smith

CALCULATED-DESIGNED BY

CHECKED BY

REVISED BY

DATE REVISED

Daniel Anderson

LAST REVISION DATE PLOTTED => 26-OCT-2022
TIME PLOTTED => 13:52
10-26-22

BORDER LAST REVISED 8/5/2020

USERNAME =>
DGN FILE => 01170002451b000_PM 26.16.dgn

RELATIVE BORDER SCALE IS IN INCHES 0 1 2 3

UNIT 0312

PROJECT NUMBER & PHASE 01160000351

Dist	COUNTY	LOCATION CODE	POST MILES TOTAL PROJECT	SHEET No.	TOTAL SHEETS
01	HUM	101			78

REGISTERED CIVIL ENGINEER DATE

PLANS APPROVAL DATE

THE STATE OF CALIFORNIA, ITS OFFICERS OR AGENTS SHALL NOT BE RESPONSIBLE FOR THE ACCURACY OR COMPLETENESS OF SCANNED COPIES OF THIS PLAN SHEET.

PRELIMINARY DESIGN FOR REVIEW ONLY

REGISTERED PROFESSIONAL ENGINEER No. Exp. CIVIL STATE OF CALIFORNIA

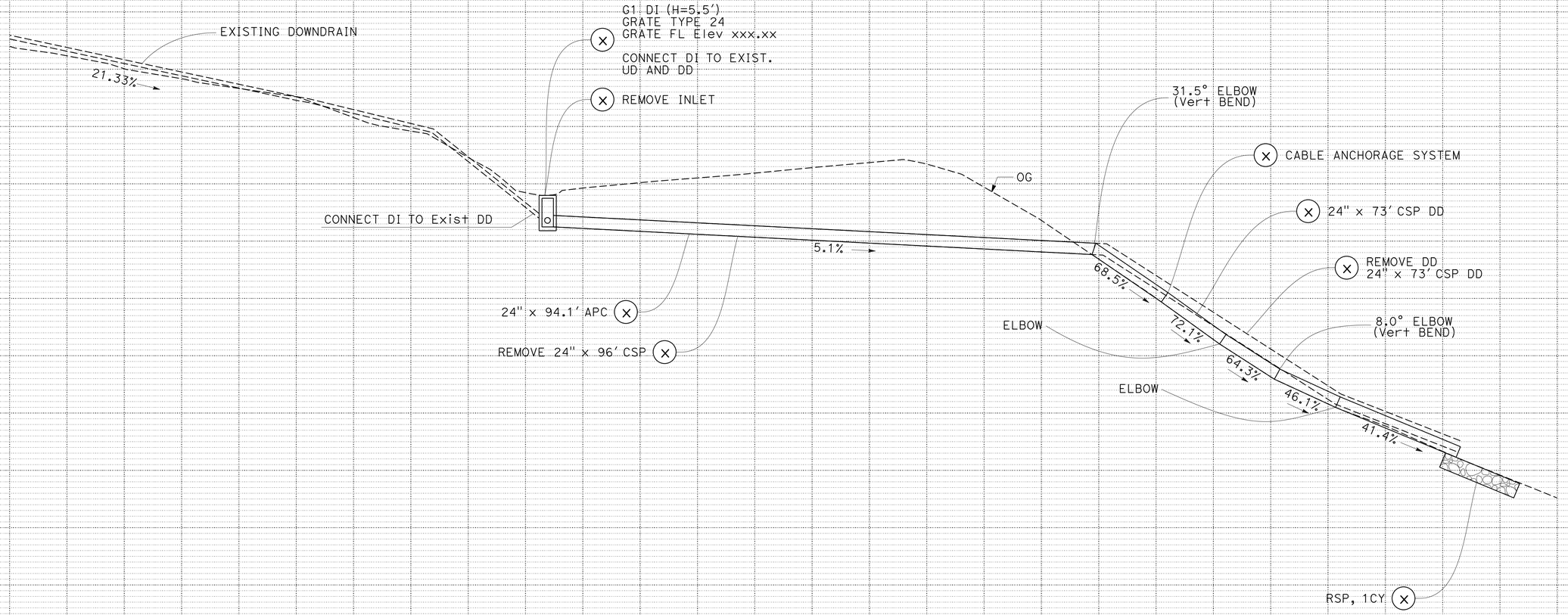

DRAINAGE SYSTEM No. 15

PM 26.78

DRAINAGE PROFILES

SCALE: 1" = 10'

DP-15

REVISED BY

DATE REVISED

CALCULATED-DESIGNED BY

CHECKED BY

Daniel Anderson

FUNCTIONAL SUPERVISOR

Matt Smith

STATE OF CALIFORNIA - DEPARTMENT OF TRANSPORTATION

Caltrans

LAST REVISION 10-26-22

DATE PLOTTED => 26-OCT-2022

TIME PLOTTED => 13:52

BORDER LAST REVISED 8/5/2020

USERNAME =>

DGN FILE => 0117000245ib000_PM 26.78.dgn

RELATIVE BORDER SCALE IS IN INCHES 0 1 2 3

UNIT 0312

PROJECT NUMBER & PHASE 01160000351

Dist	COUNTY	LOCATION CODE	POST MILES TOTAL PROJECT	SHEET No.	TOTAL SHEETS
01	HUM	101			78

REGISTERED CIVIL ENGINEER DATE

PLANS APPROVAL DATE

THE STATE OF CALIFORNIA, ITS OFFICERS OR AGENTS SHALL NOT BE RESPONSIBLE FOR THE ACCURACY OR COMPLETENESS OF SCANNED COPIES OF THIS PLAN SHEET.

REGISTERED PROFESSIONAL ENGINEER No. Exp. CIVIL STATE OF CALIFORNIA

PRELIMINARY DESIGN ONLY FOR REVIEW

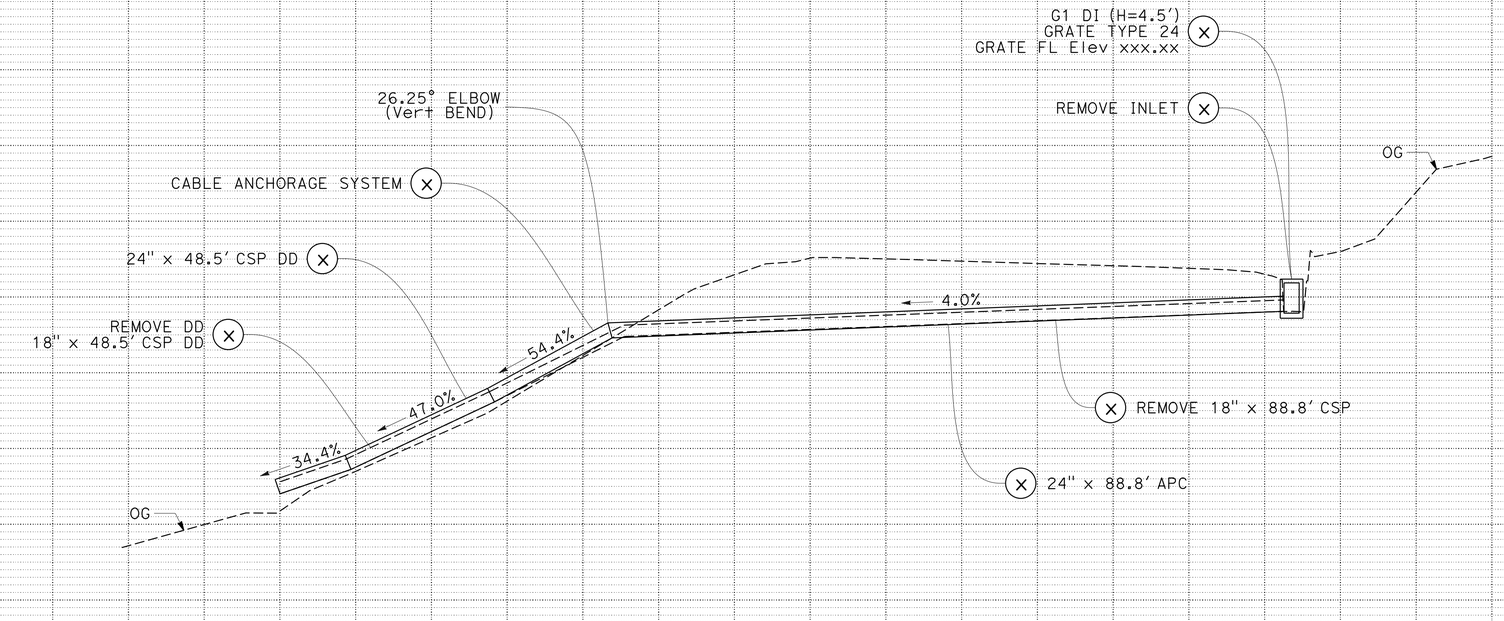

DRAINAGE SYSTEM No. 16

PM 27.52

DRAINAGE PROFILES

SCALE: 1" = 10'

DP-16

STATE OF CALIFORNIA - DEPARTMENT OF TRANSPORTATION

Caltrans

FUNCTIONAL SUPERVISOR: Matt Smith

CALCULATED-DESIGNED BY

CHECKED BY

Daniel Anderson

REVISED BY

DATE REVISED

LAST REVISION: DATE PLOTTED => 26-OCT-2022
TIME PLOTTED => 13:52
10-26-22

BORDER LAST REVISED 8/5/2020

USERNAME =>
DGN FILE => 01170000245ib000_PM 27.52.dgn

RELATIVE BORDER SCALE IS IN INCHES 0 1 2 3

UNIT 0312

PROJECT NUMBER & PHASE 01160000351

Dist	COUNTY	LOCATION CODE	POST MILES TOTAL PROJECT	SHEET No.	TOTAL SHEETS
01	HUM	101			78

REGISTERED CIVIL ENGINEER DATE

PLANS APPROVAL DATE

THE STATE OF CALIFORNIA, ITS OFFICERS OR AGENTS SHALL NOT BE RESPONSIBLE FOR THE ACCURACY OR COMPLETENESS OF SCANNED COPIES OF THIS PLAN SHEET.

REGISTERED PROFESSIONAL ENGINEER No. Exp. CIVIL STATE OF CALIFORNIA

PRELIMINARY DESIGN ONLY FOR REVIEW

NOTE:
POTHOLING WILL BE REQUIED TO FIND EXACT LOCATION OF JUNCTION BOX

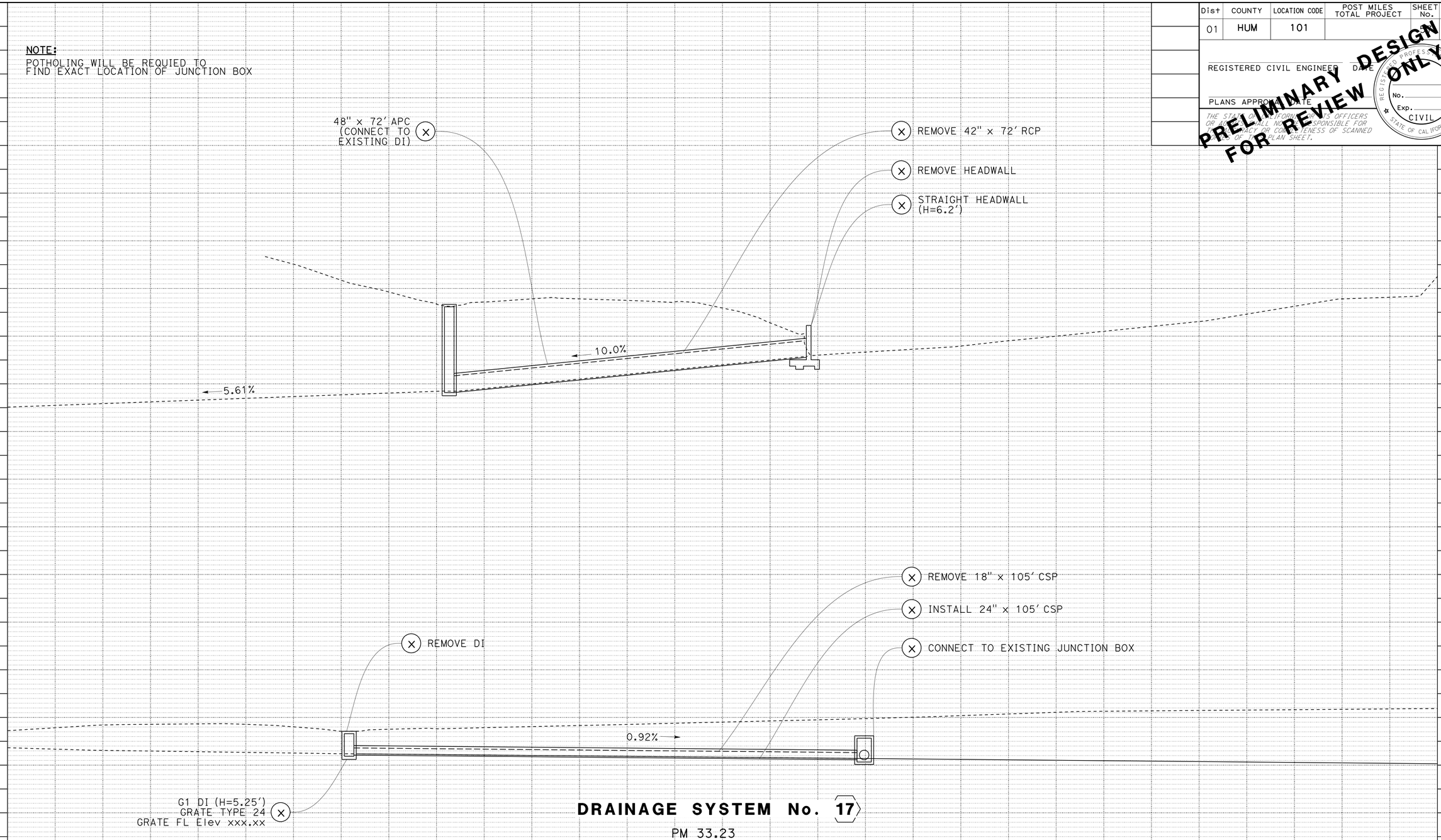

DRAINAGE SYSTEM No. 17

PM 33.23

DRAINAGE PROFILES

SCALE: 1" = 10'

DP-17

REVISED BY | DATE REVISED

Daniel Anderson

CALCULATED-DESIGNED BY | CHECKED BY

FUNCTIONAL SUPERVISOR

Matt Smith

STATE OF CALIFORNIA - DEPARTMENT OF TRANSPORTATION

Caltrans

LAST REVISION | DATE PLOTTED => 26-OCT-2022
10-26-22 | TIME PLOTTED => 13:52

BORDER LAST REVISED 8/5/2020

USERNAME =>
DGN FILE => 01170002451b000_PM 33.23.dgn

RELATIVE BORDER SCALE IS IN INCHES 0 1 2 3

UNIT 0312

PROJECT NUMBER & PHASE 01160000351

Dist	COUNTY	LOCATION CODE	POST MILES TOTAL PROJECT	SHEET No.	TOTAL SHEETS
01	HUM	101		18	78

REGISTERED CIVIL ENGINEER DATE

PLANS APPROVAL DATE

THE STATE OF CALIFORNIA, ITS OFFICERS OR AGENTS SHALL NOT BE RESPONSIBLE FOR THE ACCURACY OR COMPLETENESS OF SCANNED COPIES OF THIS PLAN SHEET.

REGISTERED PROFESSIONAL ENGINEER No. Exp. CIVIL STATE OF CALIFORNIA

PRELIMINARY DESIGN ONLY FOR REVIEW

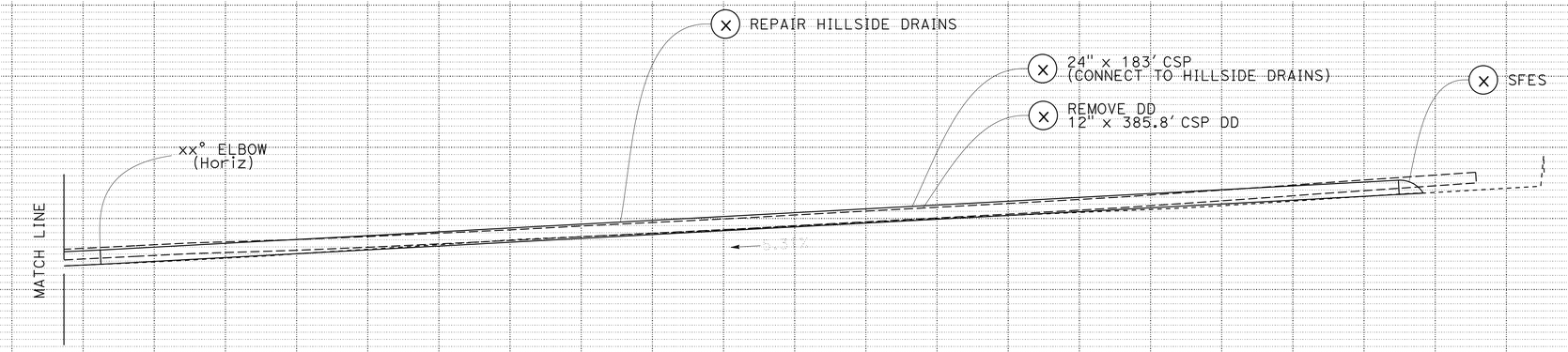

DRAINAGE SYSTEM No. 18

PM 34.77

DRAINAGE PROFILES

SCALE: 1" = 10'

DP-18

REVISED BY | DATE REVISED

CALCULATED-DESIGNED BY: Daniel Anderson

CHECKED BY

FUNCTIONAL SUPERVISOR: Matt Smith

STATE OF CALIFORNIA - DEPARTMENT OF TRANSPORTATION

Caltrans

LAST REVISION DATE PLOTTED => 26-OCT-2022
10-26-22 TIME PLOTTED => 13:52

BORDER LAST REVISED 8/5/2020 | USERNAME => | DGN FILE => 0117000245ib000_PM 34.77.dgn | RELATIVE BORDER SCALE IS IN INCHES 0 1 2 3 | UNIT 0312 | PROJECT NUMBER & PHASE 01160000351

Dist	COUNTY	LOCATION CODE	POST MILES TOTAL PROJECT	SHEET No.	TOTAL SHEETS
01	HUM	101			78

REGISTERED CIVIL ENGINEER DATE

PLANS APPROVAL DATE

THE STATE OF CALIFORNIA, ITS OFFICERS OR AGENTS SHALL NOT BE RESPONSIBLE FOR THE ACCURACY OR COMPLETENESS OF SCANNED COPIES OF THIS PLAN SHEET.

PRELIMINARY DESIGN FOR REVIEW ONLY

REGISTERED PROFESSIONAL ENGINEER No. Exp. CIVIL STATE OF CALIFORNIA

NOTE:

ABANDONED TELECOMMUNICATION (FIBEROPTIC CABLE) IS KNOWN TO PUNCTURE EXISTING CSP ON WEST SIDE OF HIGHWAY 101, D1 PERMITS IS WORKING WITH AT&T TO REMOVE SAID CABLE SYSTEM UNDER AN ENCROACHMENT PERMIT

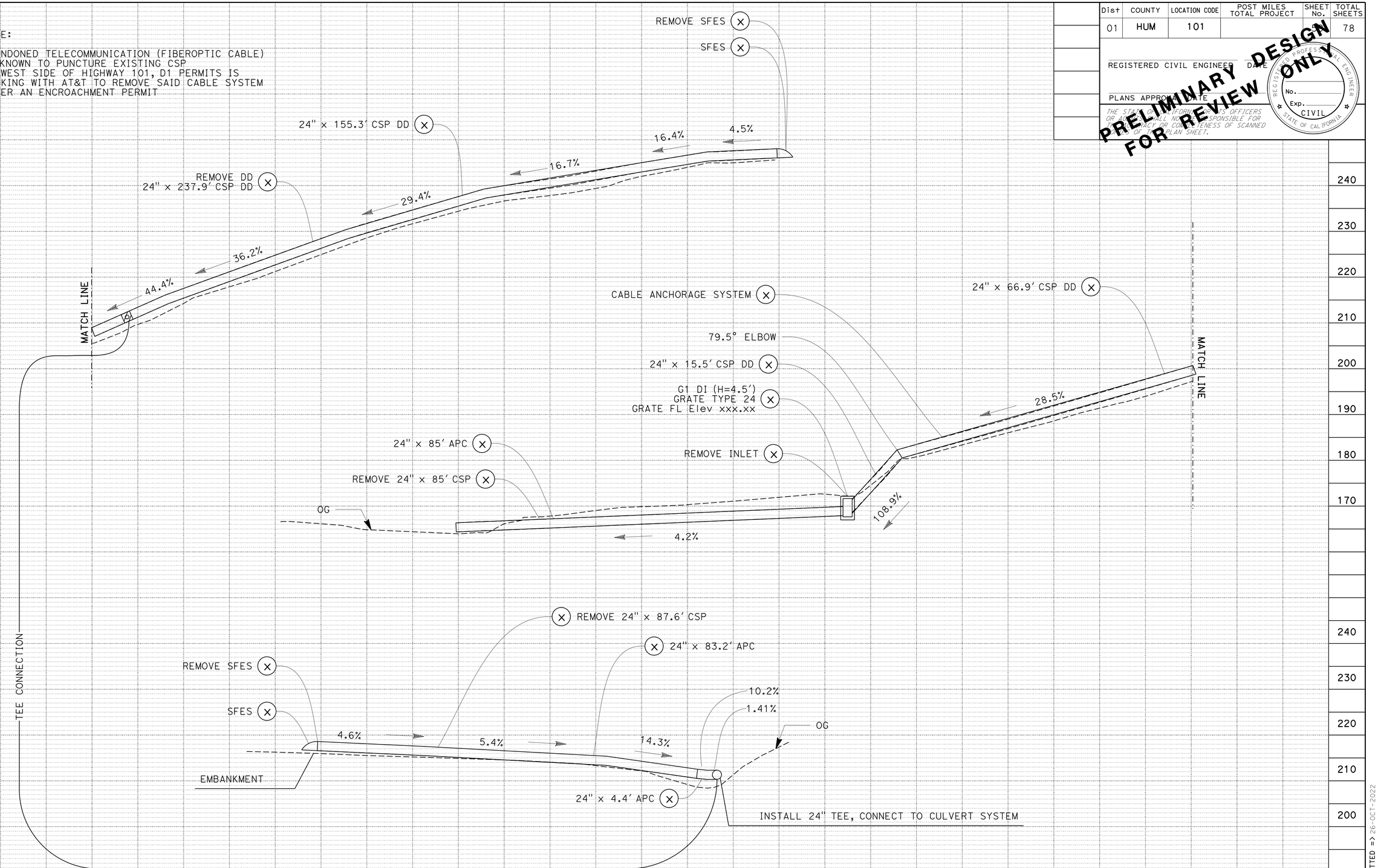

DRAINAGE SYSTEM No. 19

PM 35.00

DRAINAGE PROFILES

SCALE: 1" = 10'

DP-19

REVISED BY | DATE REVISED

Daniel Anderson

CALCULATED-DESIGNED BY | CHECKED BY

FUNCTIONAL SUPERVISOR: Matt Smith

STATE OF CALIFORNIA - DEPARTMENT OF TRANSPORTATION

Caltrans

LAST REVISION | DATE PLOTTED => 26-OCT-2022 | TIME PLOTTED => 13:52

10-26-22

BORDER LAST REVISED 8/5/2020 | USERNAME => | DGN FILE => 0117000245ib000_PM 35.00.dgn | RELATIVE BORDER SCALE IS IN INCHES 0 1 2 3 | UNIT 0312 | PROJECT NUMBER & PHASE 01160000351

Dist	COUNTY	LOCATION CODE	POST MILES TOTAL PROJECT	SHEET No.	TOTAL SHEETS
01	HUM	101		60	78

REGISTERED CIVIL ENGINEER DATE

PLANS APPROVAL DATE

THE STATE OF CALIFORNIA OR ITS OFFICERS OR AGENTS SHALL NOT BE RESPONSIBLE FOR THE ACCURACY OR COMPLETENESS OF SCANNED VERSIONS OF THIS PLAN SHEET.

PRELIMINARY DESIGN FOR REVIEW ONLY

REGISTERED PROFESSIONAL ENGINEER No. Exp. CIVIL STATE OF CALIFORNIA

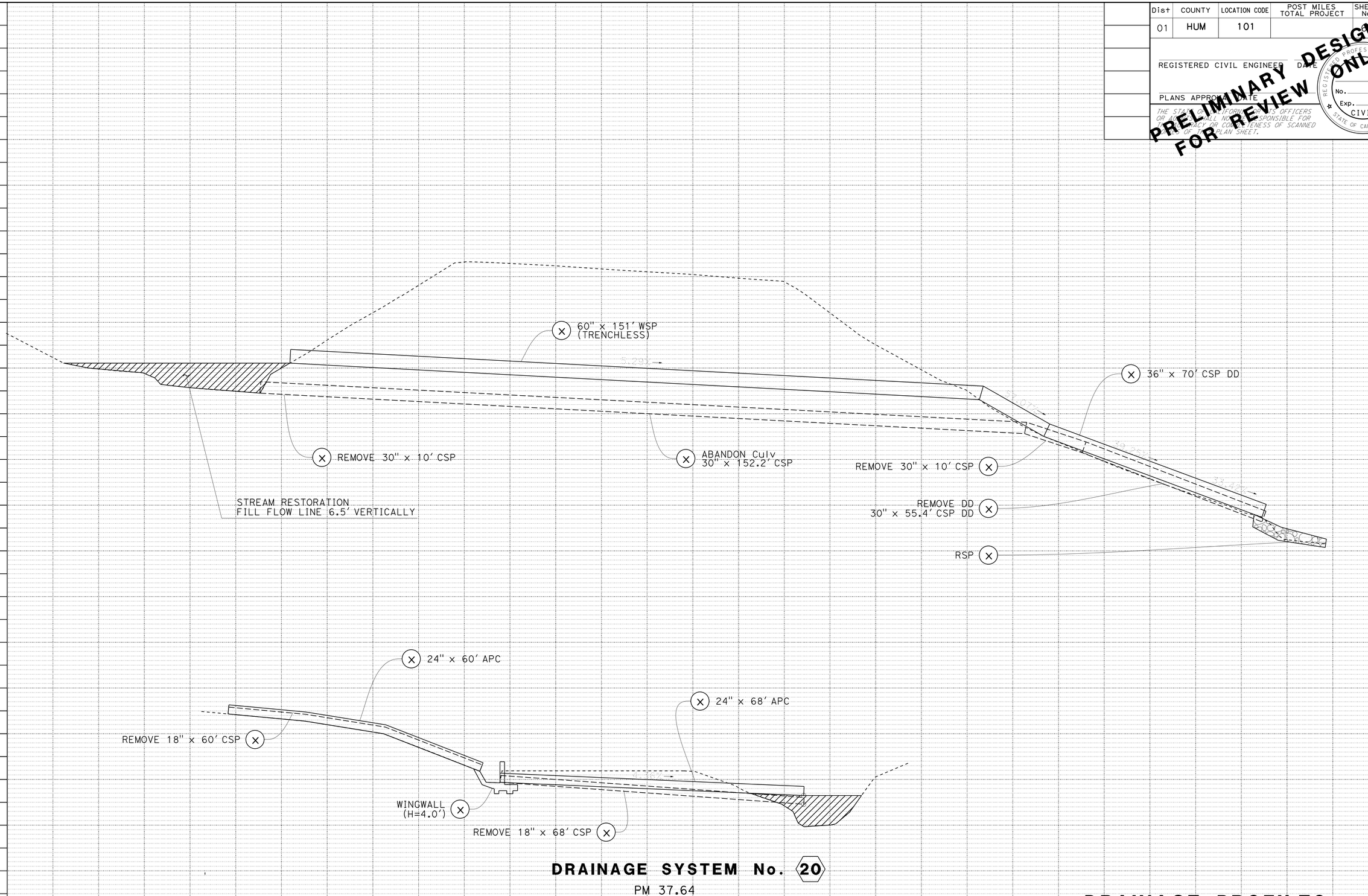

DRAINAGE SYSTEM No. 20

PM 37.64

DRAINAGE PROFILES

SCALE: 1" = 10'

DP-20

STATE OF CALIFORNIA - DEPARTMENT OF TRANSPORTATION

Caltrans

FUNCTIONAL SUPERVISOR: Matt Smith

CALCULATED-DESIGNED BY: Daniel Anderson

CHECKED BY

REVISED BY

DATE REVISED

DATE PLOTTED => 26-OCT-2022

TIME PLOTTED => 13:52

LAST REVISION 10-26-22

Dist	COUNTY	LOCATION CODE	POST MILES TOTAL PROJECT	SHEET No.	TOTAL SHEETS
01	HUM	101			78

REGISTERED CIVIL ENGINEER DATE

PLANS APPROVAL DATE

THE STATE OF CALIFORNIA, ITS OFFICERS OR AGENTS SHALL NOT BE RESPONSIBLE FOR THE ACCURACY OR COMPLETENESS OF SCANNED COPIES OF THIS PLAN SHEET.

REGISTERED PROFESSIONAL ENGINEER No. Exp. CIVIL STATE OF CALIFORNIA

PRELIMINARY DESIGN ONLY FOR REVIEW

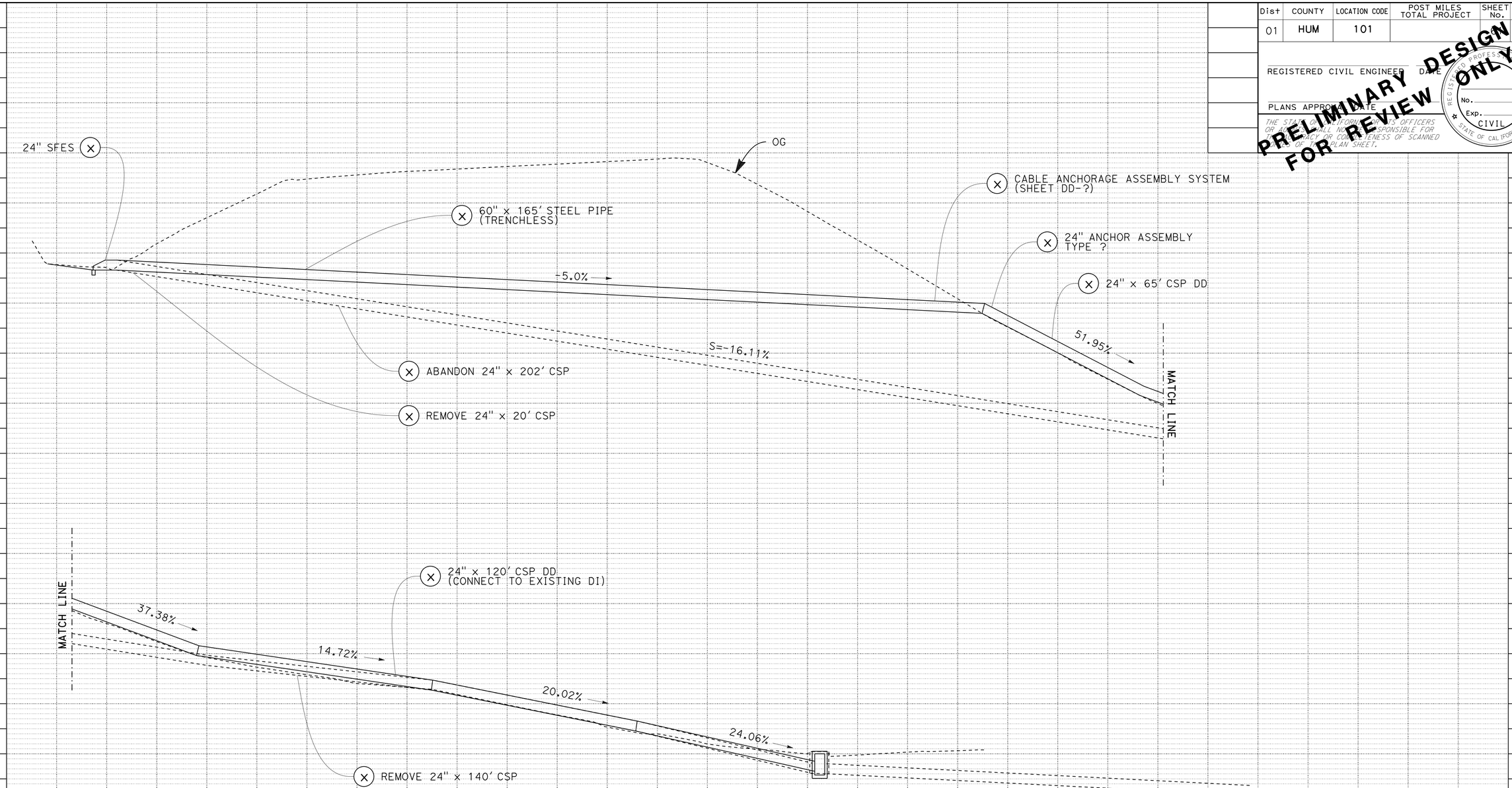

DRAINAGE SYSTEM No. 21

PM 39.01

DRAINAGE PROFILES

SCALE: 1" = 10'

DP-21

CALCULATED-DESIGNED BY

CHECKED BY

FUNCTIONAL SUPERVISOR: Matt Smith

REVISED BY | DATE REVISED: Daniel Anderson

STATE OF CALIFORNIA - DEPARTMENT OF TRANSPORTATION

Caltrans

LAST REVISION | DATE PLOTTED => 26-OCT-2022 | TIME PLOTTED => 13:52 | 10-26-22

BORDER LAST REVISED 8/5/2020

USERNAME =>

DGN FILE => 01170002451b000_PM 39.01.dgn

RELATIVE BORDER SCALE IS IN INCHES 0 1 2 3

UNIT 0312

PROJECT NUMBER & PHASE 01160000351

Dist	COUNTY	LOCATION CODE	POST MILES TOTAL PROJECT	SHEET No.	TOTAL SHEETS
01	HUM	101			78

REGISTERED CIVIL ENGINEER DATE

PLANS APPROVAL DATE

THE STATE OF CALIFORNIA, ITS OFFICERS OR AGENTS SHALL NOT BE RESPONSIBLE FOR THE ACCURACY OR COMPLETENESS OF SCANNED COPIES OF THIS PLAN SHEET.

REGISTERED PROFESSIONAL ENGINEER No. Exp. CIVIL STATE OF CALIFORNIA

PRELIMINARY DESIGN ONLY FOR REVIEW

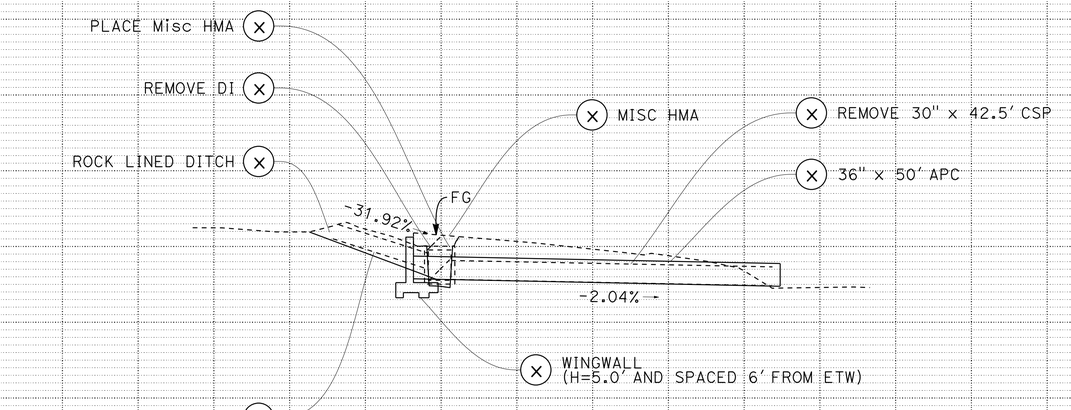

DRAINAGE SYSTEM No. 22

PM 39.23

DRAINAGE PROFILES

SCALE: 1" = 10'

DP-22

REVISED BY | DATE REVISED

Daniel Anderson

CALCULATED-DESIGNED BY | CHECKED BY

FUNCTIONAL SUPERVISOR: Matt Smith

STATE OF CALIFORNIA - DEPARTMENT OF TRANSPORTATION

Caltrans

LAST REVISION 10-26-22 | DATE PLOTTED => 26-OCT-2022 | TIME PLOTTED => 13:52

BORDER LAST REVISED 8/5/2020 | USERNAME => | DGN FILE => 0117000245ib000_PM 39.23.dgn | RELATIVE BORDER SCALE IS IN INCHES 0 1 2 3 | UNIT 0312 | PROJECT NUMBER & PHASE 01160000351

Dist	COUNTY	LOCATION CODE	POST MILES TOTAL PROJECT	SHEET No.	TOTAL SHEETS
01	HUM	101		78	

REGISTERED CIVIL ENGINEER DATE

PLANS APPROVAL DATE

THE STATE OF CALIFORNIA, ITS OFFICERS OR AGENTS SHALL NOT BE RESPONSIBLE FOR THE ACCURACY OR COMPLETENESS OF SCANNED COPIES OF THIS PLAN SHEET.

REGISTERED PROFESSIONAL ENGINEER No. Exp. CIVIL STATE OF CALIFORNIA

PRELIMINARY DESIGN ONLY FOR REVIEW

WINGWALL (H=5.0')

36" x 265' WSP (TRENCHLESS)

ROADWAY EXCAVATION

MATCH LINE

xx DI (H=x.x')
GRATE TYPE xxxx
GRATE FL Elev xxx.xx

ROCK LINED DITCH

MATCH LINE

36" x 75' APC

EMBANKMENT (COVER EXISTING INLET)

REMOVE 30" x 15' CSP

ABANDON 30" x 230' CSP

MATCH LINE

MATCH LINE

REMOVE INLET

REMOVE 30" x 72.6' CSP

REMOVE 30" x 20' CSP

DRAINAGE SYSTEM No. 23

PM 39.65

DRAINAGE PROFILES

SCALE: 1" = 10'

DP-23

REVISED BY
DATE REVISED
Daniel Anderson
CALCULATED-DESIGNED BY
CHECKED BY
FUNCTIONAL SUPERVISOR
Matt Smith
STATE OF CALIFORNIA - DEPARTMENT OF TRANSPORTATION
Caltrans

LAST REVISION DATE PLOTTED => 26-OCT-2022
10-26-22 TIME PLOTTED => 13:52

BORDER LAST REVISED 8/5/2020 | USERNAME => | DGN FILE => 01170002451b000_PM 39.65.dgn | RELATIVE BORDER SCALE IS IN INCHES 0 1 2 3 | UNIT 0312 | PROJECT NUMBER & PHASE 01160000351

Dist	COUNTY	LOCATION CODE	POST MILES TOTAL PROJECT	SHEET No.	TOTAL SHEETS
01	HUM	101		24	78

REGISTERED CIVIL ENGINEER DATE

PLANS APPROVAL DATE

THE STATE OF CALIFORNIA, ITS OFFICERS OR AGENTS SHALL NOT BE RESPONSIBLE FOR THE ACCURACY OR COMPLETENESS OF SCANNED COPIES OF THIS PLAN SHEET.

REGISTERED PROFESSIONAL ENGINEER No. Exp. CIVIL STATE OF CALIFORNIA

PRELIMINARY DESIGN ONLY FOR REVIEW

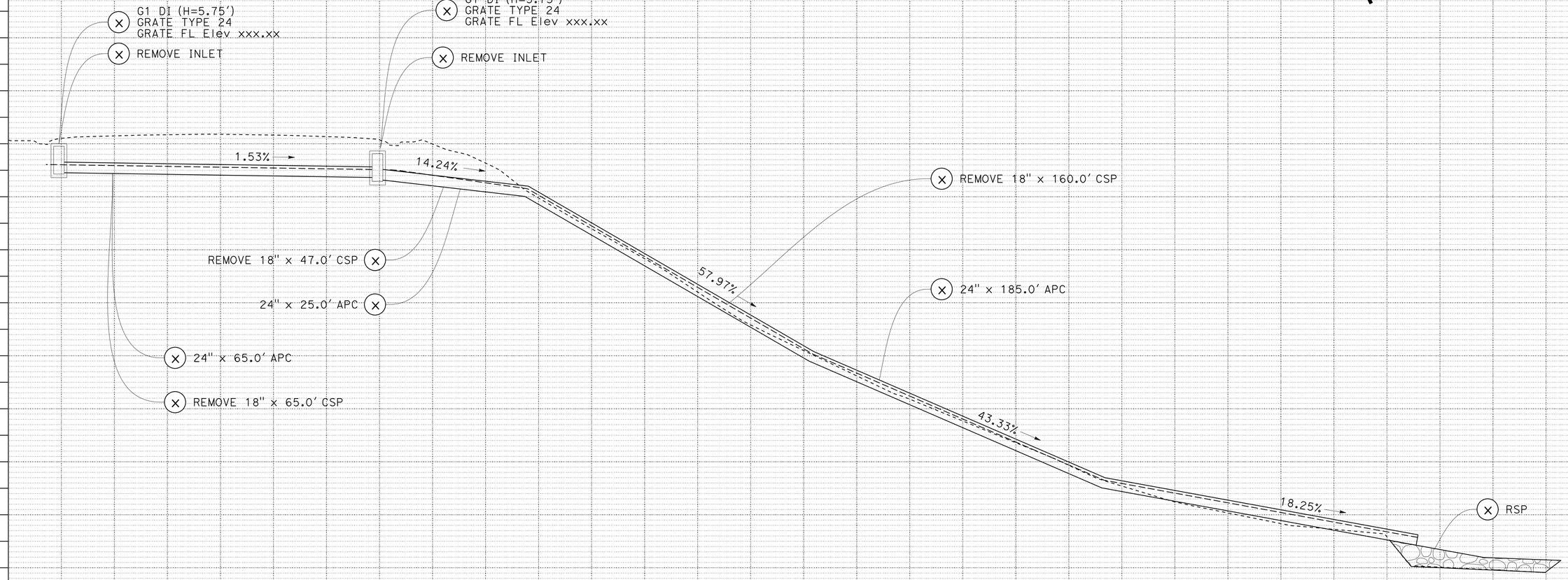

DRAINAGE SYSTEM No. 24

PM 40.38

DRAINAGE PROFILES

SCALE: 1" = 10'

DP-24

CALCULATED-DESIGNED BY

CHECKED BY

FUNCTIONAL SUPERVISOR: Matt Smith

REVISED BY | DATE REVISED

Daniel Anderson

STATE OF CALIFORNIA - DEPARTMENT OF TRANSPORTATION

Caltrans

LAST REVISION | DATE PLOTTED => 26-OCT-2022 | TIME PLOTTED => 13:52

10-26-22

BORDER LAST REVISED 8/5/2020

USERNAME =>
DGN FILE => 01170002451b000_PM 40.38.dgn

RELATIVE BORDER SCALE IS IN INCHES 0 1 2 3

UNIT 0312

PROJECT NUMBER & PHASE 01160000351

Dist	COUNTY	LOCATION CODE	POST MILES TOTAL PROJECT	SHEET No.	TOTAL SHEETS
01	HUM	101			78

REGISTERED CIVIL ENGINEER DATE

PLANS APPROVAL DATE

THE STATE OF CALIFORNIA, ITS OFFICERS OR AGENTS SHALL NOT BE RESPONSIBLE FOR THE ACCURACY OR COMPLETENESS OF SCANNED IMAGES OF THIS PLAN SHEET.

REGISTERED PROFESSIONAL ENGINEER No. Exp. CIVIL STATE OF CALIFORNIA

PRELIMINARY DESIGN ONLY FOR REVIEW

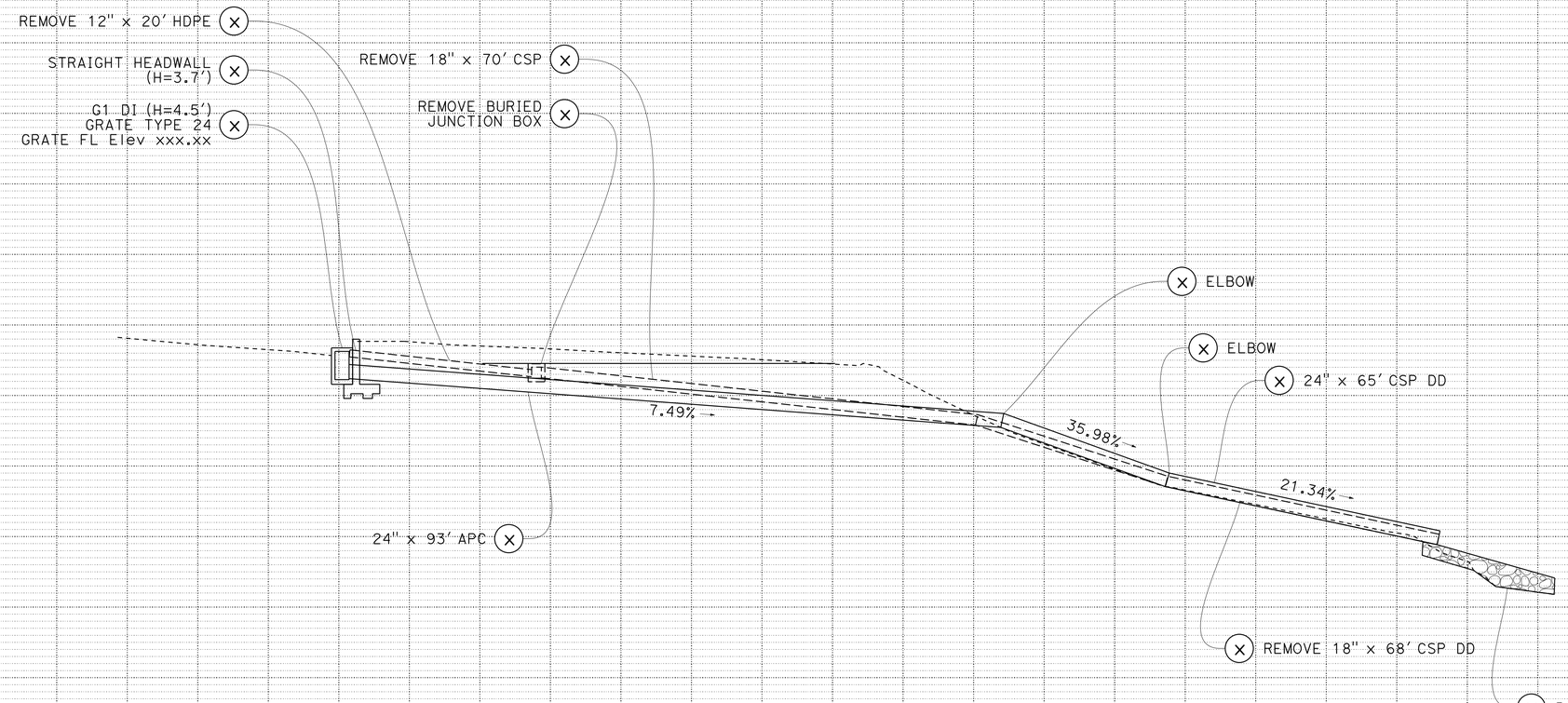

DRAINAGE SYSTEM No. 25

PM 41.45

DRAINAGE PROFILES

SCALE: 1" = 10'

DP-25

CALCULATED-DESIGNED BY

CHECKED BY

FUNCTIONAL SUPERVISOR: Matt Smith

REVISED BY | DATE REVISED

Daniel Anderson

STATE OF CALIFORNIA - DEPARTMENT OF TRANSPORTATION

Caltrans

LAST REVISION | DATE PLOTTED => 26-OCT-2022 | TIME PLOTTED => 13:52

10-26-22

BORDER LAST REVISED 8/5/2020

USERNAME =>
DGN FILE => 0117000245ib000_PM 41.45.dgn

RELATIVE BORDER SCALE IS IN INCHES 0 1 2 3

UNIT 0312

PROJECT NUMBER & PHASE 01160000351

Dist	COUNTY	LOCATION CODE	POST MILES TOTAL PROJECT	SHEET No.	TOTAL SHEETS
01	HUM	101			78

REGISTERED CIVIL ENGINEER DATE

PLANS APPROVAL DATE

THE STATE OF CALIFORNIA, ITS OFFICERS OR AGENTS SHALL NOT BE RESPONSIBLE FOR THE ACCURACY OR COMPLETENESS OF SCANNED COPIES OF THIS PLAN SHEET.

REGISTERED PROFESSIONAL ENGINEER No. Exp. CIVIL STATE OF CALIFORNIA

PRELIMINARY DESIGN ONLY FOR REVIEW

REVISED BY | DATE REVISED

CALCULATED-DESIGNED BY: Daniel Anderson

CHECKED BY

FUNCTIONAL SUPERVISOR: Matt Smith

STATE OF CALIFORNIA - DEPARTMENT OF TRANSPORTATION

Caltrans

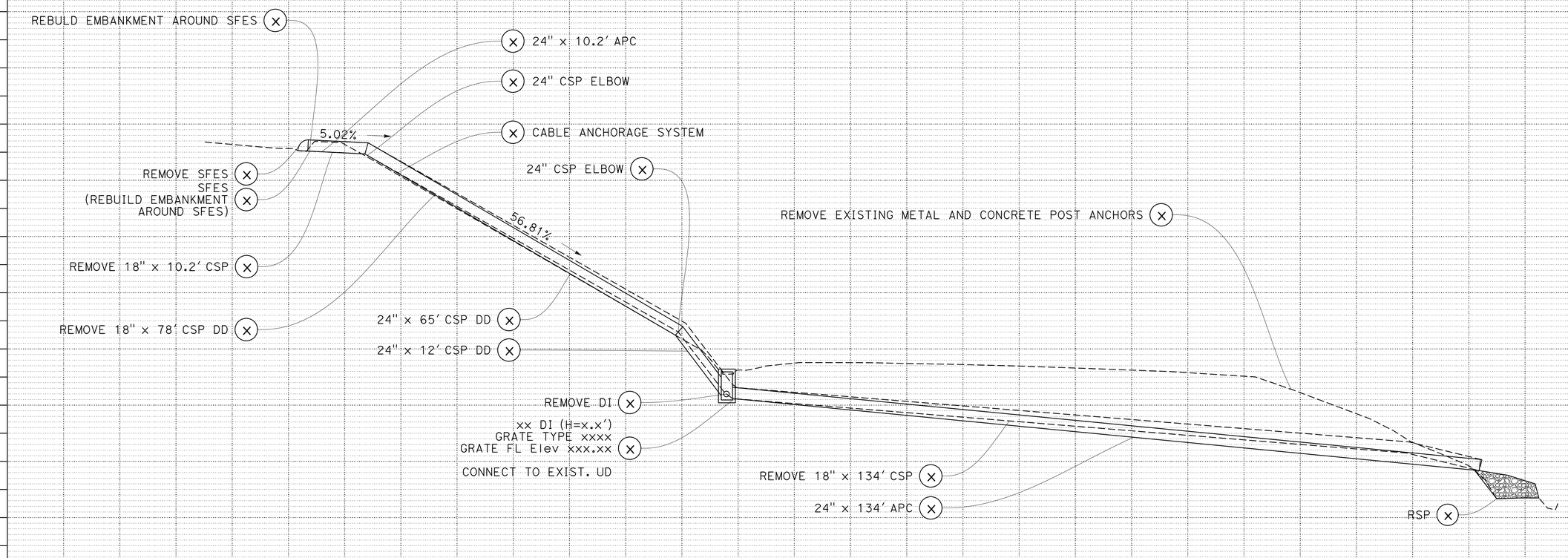

DRAINAGE SYSTEM No. 26

PM 41.69

DRAINAGE PROFILES

SCALE: 1" = 10'

DP-26

LAST REVISION DATE PLOTTED => 26-OCT-2022
10-26-22 TIME PLOTTED => 13:52

BORDER LAST REVISED 8/5/2020

USERNAME =>
DGN FILE => 01170002451b000_PM 41.69.dgn

RELATIVE BORDER SCALE IS IN INCHES 0 1 2 3

UNIT 0312

PROJECT NUMBER & PHASE 01160000351

Dist	COUNTY	LOCATION CODE	POST MILES TOTAL PROJECT	SHEET No.	TOTAL SHEETS
01	HUM	101			78

REGISTERED CIVIL ENGINEER DATE

PLANS APPROVAL DATE

THE STATE OF CALIFORNIA, ITS OFFICERS OR AGENTS SHALL NOT BE RESPONSIBLE FOR THE ACCURACY OR COMPLETENESS OF SCANNED COPIES OF THIS PLAN SHEET.

REGISTERED PROFESSIONAL ENGINEER No. Exp. CIVIL STATE OF CALIFORNIA

PRELIMINARY DESIGN ONLY FOR REVIEW

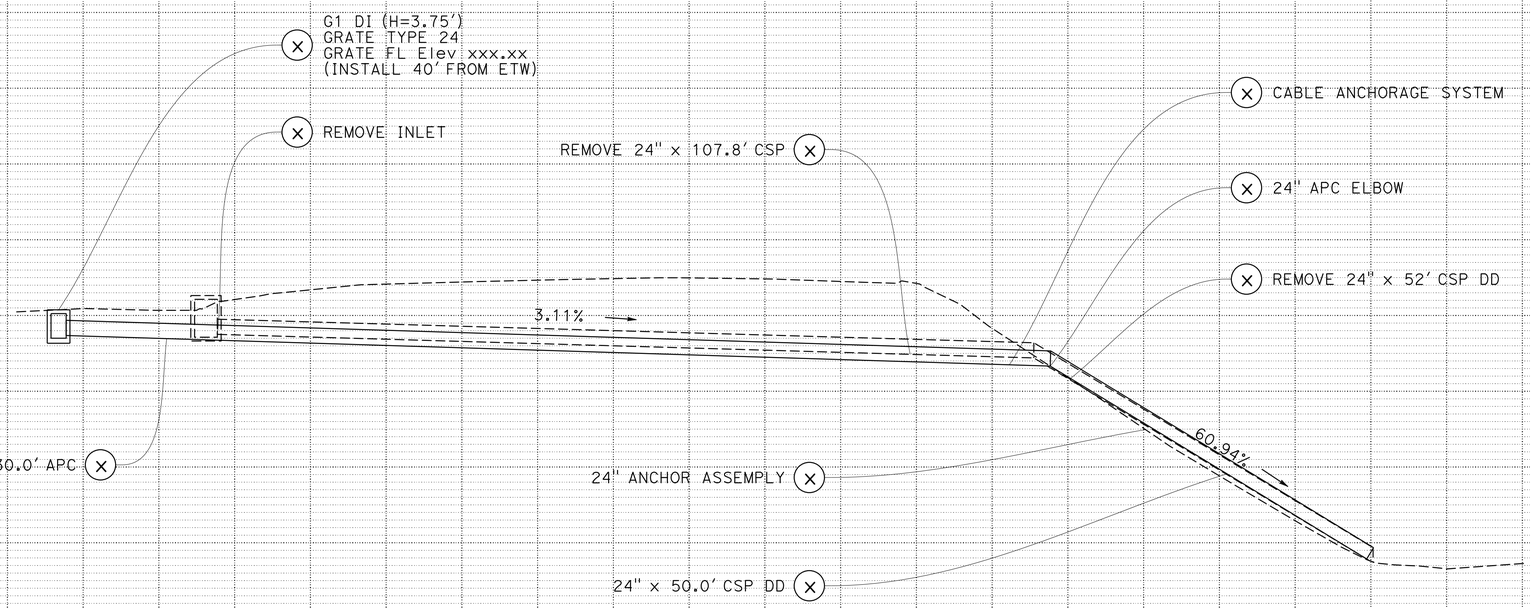

DRAINAGE SYSTEM No. 27

PM 42.12

DRAINAGE PROFILES

SCALE: 1" = 10'

DP-27

STATE OF CALIFORNIA - DEPARTMENT OF TRANSPORTATION

Caltrans

FUNCTIONAL SUPERVISOR: Matt Smith

CALCULATED-DESIGNED BY

CHECKED BY

REVISED BY

DATE REVISED

Daniel Anderson

LAST REVISION DATE PLOTTED => 26-OCT-2022
TIME PLOTTED => 13:53
10-26-22

BORDER LAST REVISED 8/5/2020

USERNAME =>
DGN FILE => 01170000245ib000_PM 42.12.dgn

RELATIVE BORDER SCALE IS IN INCHES 0 1 2 3

UNIT 0312

PROJECT NUMBER & PHASE 01160000351

Dist	COUNTY	LOCATION CODE	POST MILES TOTAL PROJECT	SHEET No.	TOTAL SHEETS
01	HUM	101		28	78

REGISTERED CIVIL ENGINEER DATE

PLANS APPROVAL DATE

THE STATE OF CALIFORNIA, ITS OFFICERS OR AGENTS SHALL NOT BE RESPONSIBLE FOR THE ACCURACY OR COMPLETENESS OF SCANNED IMAGES OF THIS PLAN SHEET.

REGISTERED PROFESSIONAL ENGINEER
No.
Exp.
CIVIL
STATE OF CALIFORNIA

PRELIMINARY DESIGN ONLY FOR REVIEW

REVISED BY | DATE REVISED

Daniel Anderson

CALCULATED-DESIGNED BY | CHECKED BY

FUNCTIONAL SUPERVISOR

Matt Smith

STATE OF CALIFORNIA - DEPARTMENT OF TRANSPORTATION

Caltrans

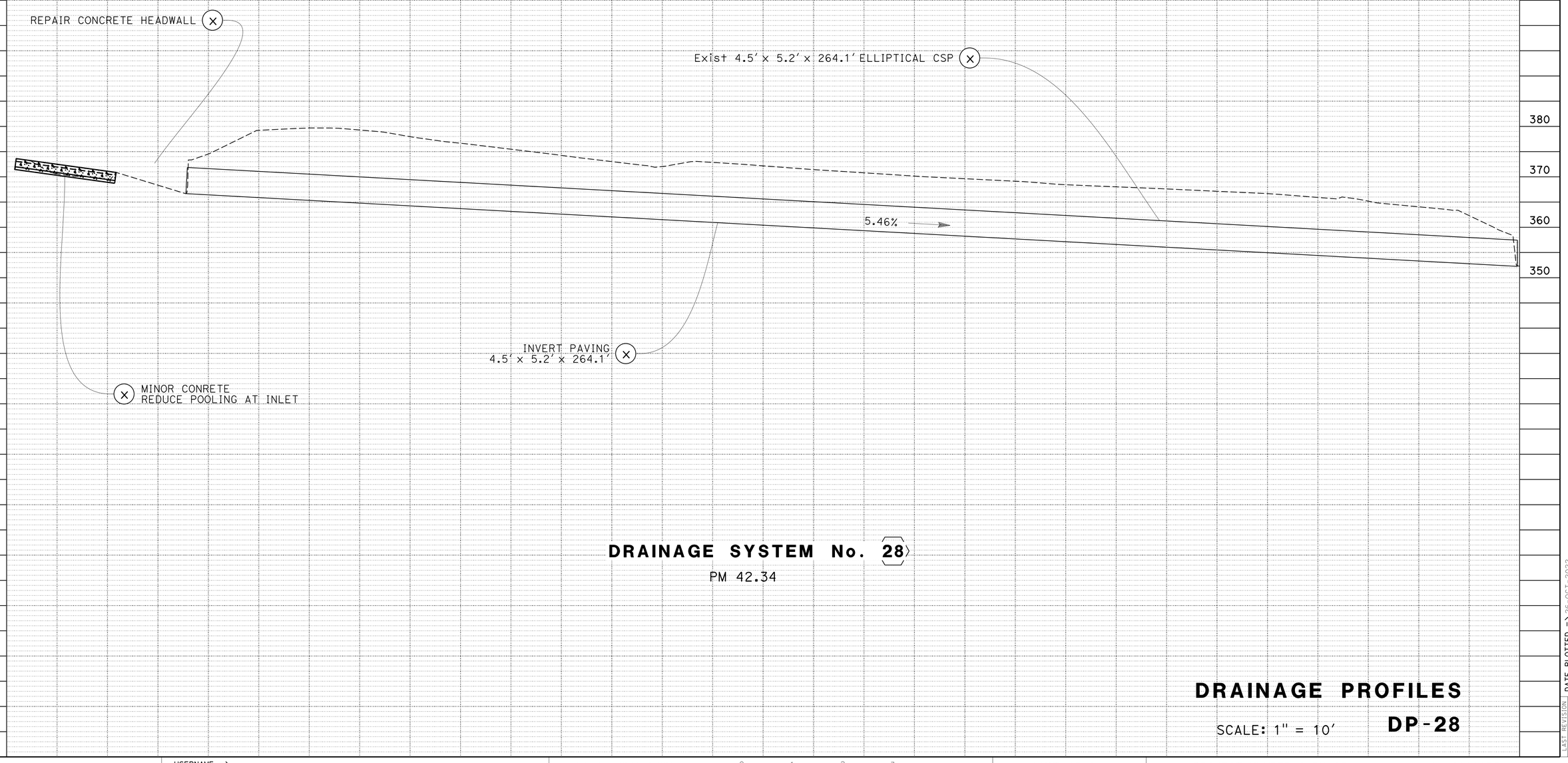

DRAINAGE SYSTEM No. 28

PM 42.34

DRAINAGE PROFILES

SCALE: 1" = 10'

DP-28

LAST REVISION | DATE PLOTTED => 26-OCT-2022
10-26-22 | TIME PLOTTED => 13:53

BORDER LAST REVISED 8/5/2020

USERNAME =>
DGN FILE => 01170000245ib000_PM 42.34.dgn

RELATIVE BORDER SCALE IS IN INCHES 0 1 2 3

UNIT 0312

PROJECT NUMBER & PHASE 01160000351

Dist	COUNTY	LOCATION CODE	POST MILES TOTAL PROJECT	SHEET No.	TOTAL SHEETS
01	HUM	101			78

REGISTERED CIVIL ENGINEER DATE

PLANS APPROVAL DATE

THE STATE OF CALIFORNIA, ITS OFFICERS OR AGENTS SHALL NOT BE RESPONSIBLE FOR THE ACCURACY OR COMPLETENESS OF SCANNED COPIES OF THIS PLAN SHEET.

REGISTERED PROFESSIONAL ENGINEER No. Exp. CIVIL STATE OF CALIFORNIA

PRELIMINARY DESIGN ONLY FOR REVIEW

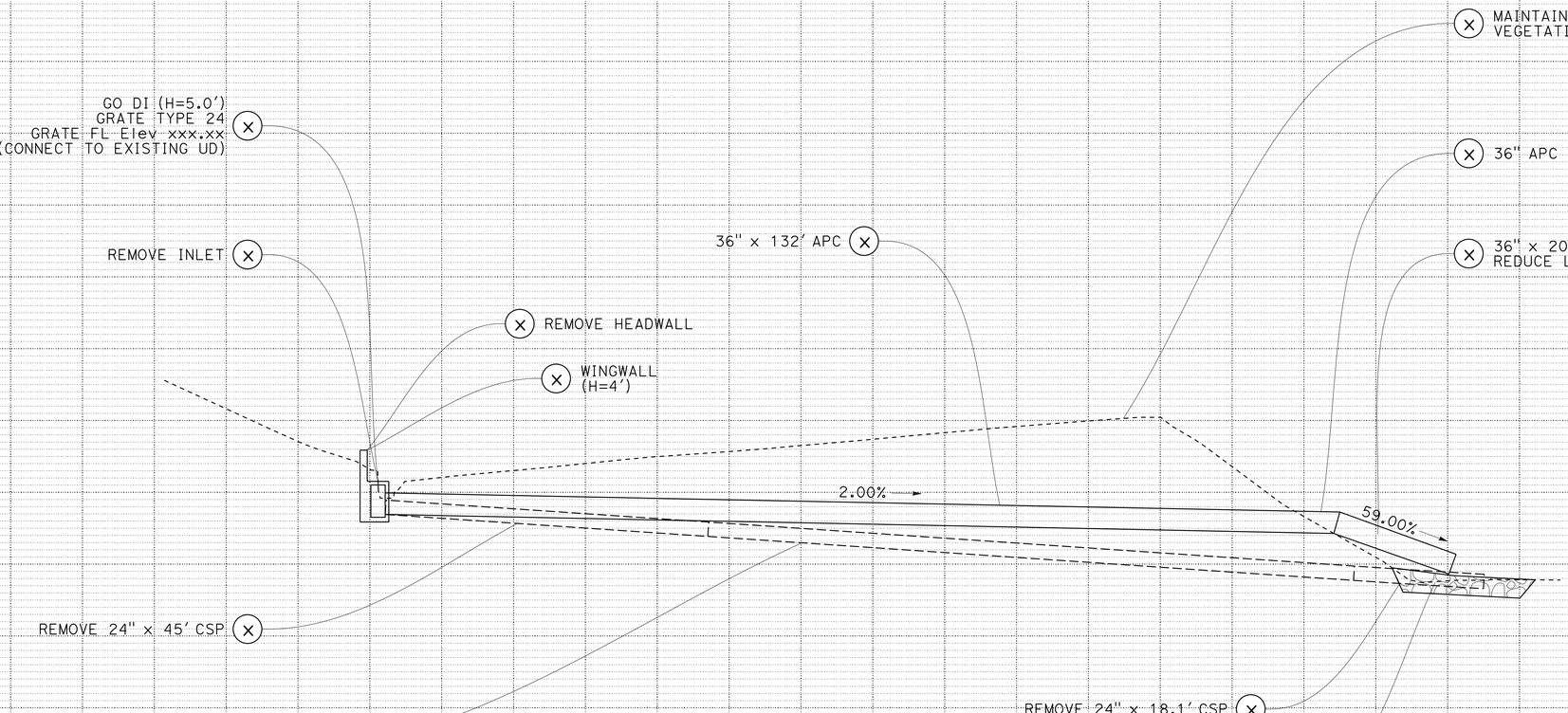

DRAINAGE SYSTEM No. 29

PM 43.17

DRAINAGE PROFILES

SCALE: 1" = 10'

DP-29

REVISED BY | DATE REVISED

CALCULATED-DESIGNED BY: Daniel Anderson

CHECKED BY

FUNCTIONAL SUPERVISOR: Matt Smith

STATE OF CALIFORNIA - DEPARTMENT OF TRANSPORTATION

Caltrans

LAST REVISION 10-26-22

DATE PLOTTED => 26-OCT-2022

TIME PLOTTED => 13:53

BORDER LAST REVISED 8/5/2020

USERNAME =>

DGN FILE => 0117000245ib000_PM 43.17.dgn

RELATIVE BORDER SCALE IS IN INCHES 0 1 2 3

UNIT 0312

PROJECT NUMBER & PHASE 01160000351

Dist	COUNTY	LOCATION CODE	POST MILES TOTAL PROJECT	SHEET No.	TOTAL SHEETS
01	HUM	101			78

REGISTERED CIVIL ENGINEER DATE

PLANS APPROVAL DATE

THE STATE OF CALIFORNIA, ITS OFFICERS OR AGENTS SHALL NOT BE RESPONSIBLE FOR THE ACCURACY OR COMPLETENESS OF SCANNED COPIES OF THIS PLAN SHEET.

REGISTERED PROFESSIONAL ENGINEER No. Exp. CIVIL STATE OF CALIFORNIA

PRELIMINARY DESIGN ONLY FOR REVIEW

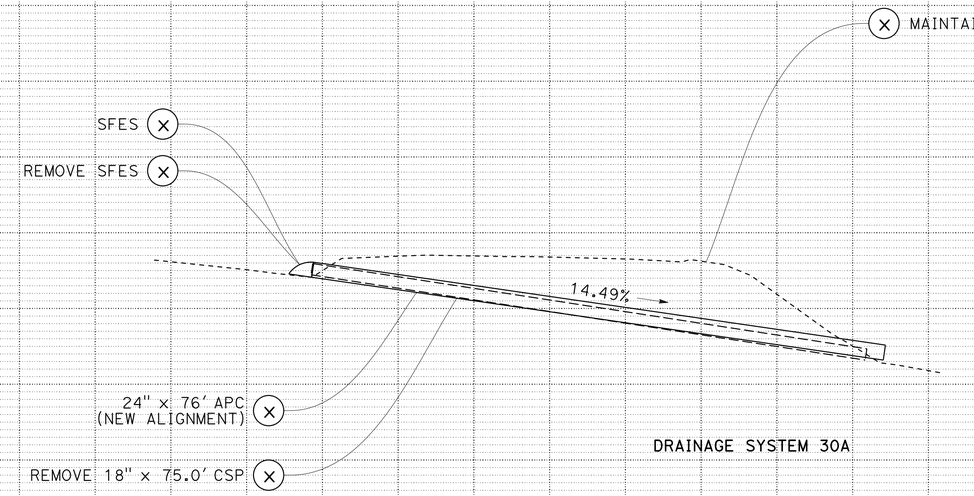

DRAINAGE SYSTEM 30A

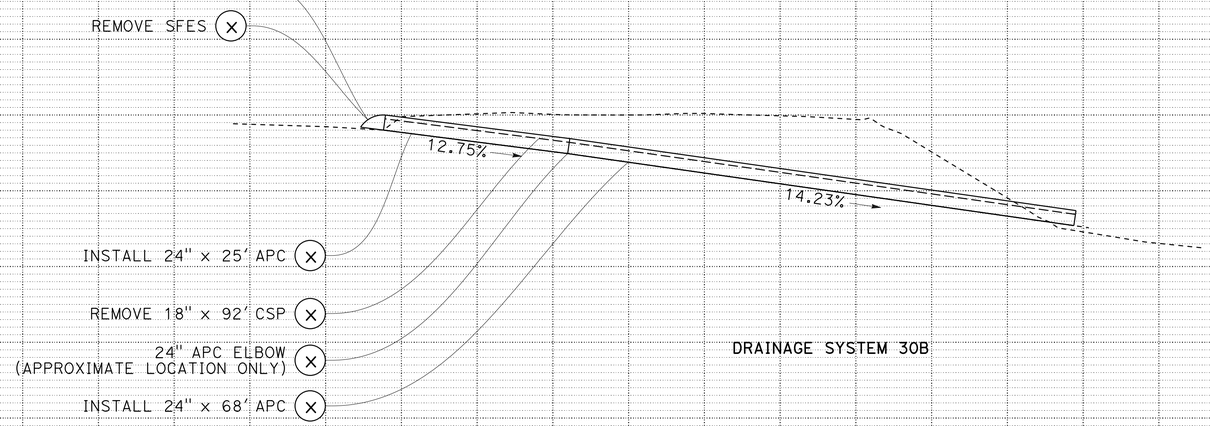

DRAINAGE SYSTEM 30B

DRAINAGE SYSTEM No. 30

PM 43.35/ 43.37

DRAINAGE PROFILES

SCALE: 1" = 10'

DP-30

STATE OF CALIFORNIA - DEPARTMENT OF TRANSPORTATION

Caltrans

FUNCTIONAL SUPERVISOR: Matt Smith

CALCULATED-DESIGNED BY

CHECKED BY

Daniel Anderson

REVISED BY

DATE REVISED

LAST REVISION DATE PLOTTED => 26-OCT-2022
TIME PLOTTED => 13:53
10-26-22

BORDER LAST REVISED 8/5/2020

USERNAME =>
DGN FILE => 01170002451b000_PM 43.35 43.37.dgn

RELATIVE BORDER SCALE IS IN INCHES 0 1 2 3

UNIT 0312

PROJECT NUMBER & PHASE 01160000351

Dist	COUNTY	LOCATION CODE	POST MILES TOTAL PROJECT	SHEET No.	TOTAL SHEETS
01	HUM	101			78

REGISTERED CIVIL ENGINEER DATE

PLANS APPROVAL DATE

THE STATE OF CALIFORNIA, ITS OFFICERS OR AGENTS SHALL NOT BE RESPONSIBLE FOR THE ACCURACY OR COMPLETENESS OF SCANNED IMAGES OF THIS PLAN SHEET.

REGISTERED PROFESSIONAL ENGINEER
No.
Exp.
CIVIL
STATE OF CALIFORNIA

PRELIMINARY DESIGN ONLY FOR REVIEW

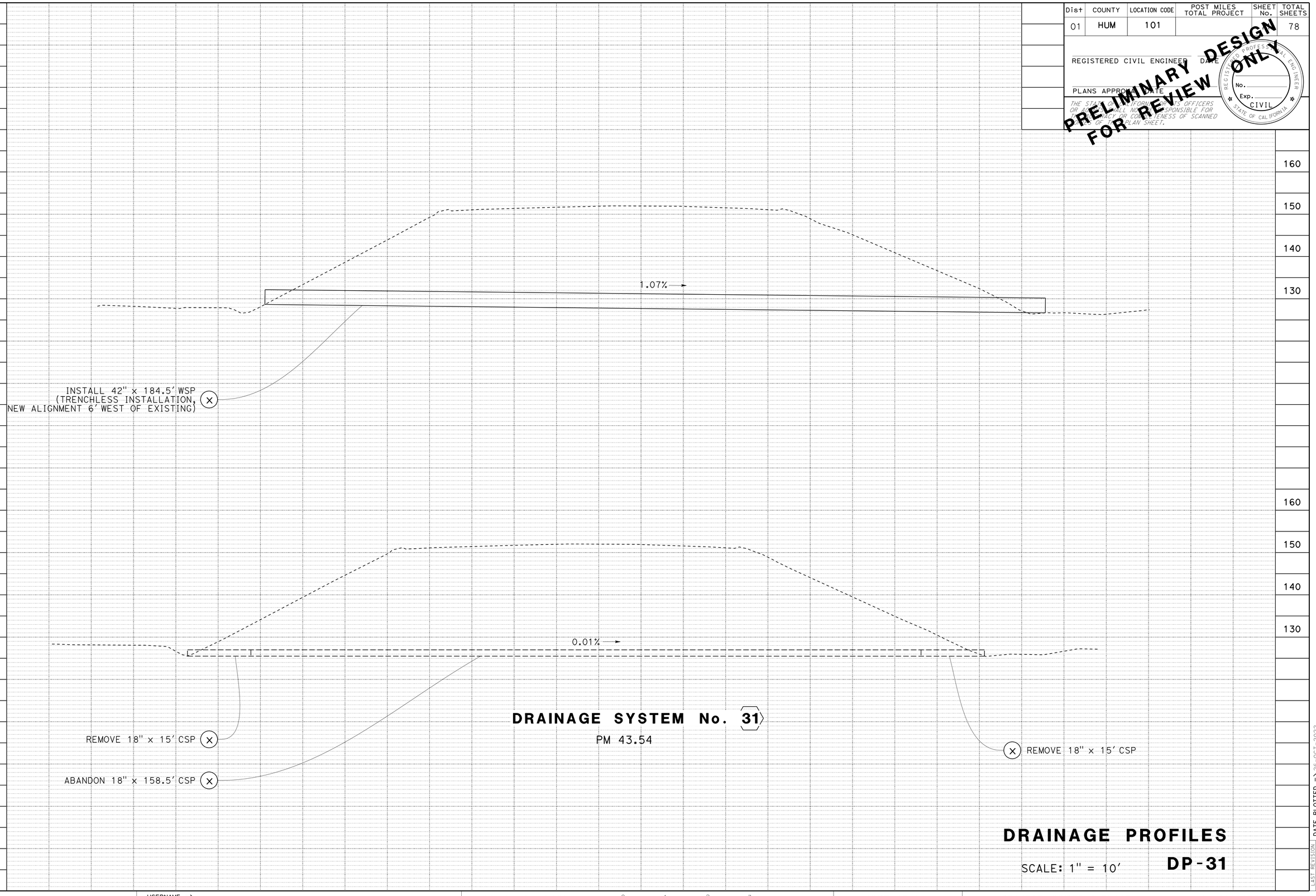

DRAINAGE SYSTEM No. 31

PM 43.54

DRAINAGE PROFILES

SCALE: 1" = 10'

DP-31

REVISED BY | DATE REVISED

CALCULATED-DESIGNED BY

CHECKED BY

Daniel Anderson

FUNCTIONAL SUPERVISOR

Matt Smith

STATE OF CALIFORNIA - DEPARTMENT OF TRANSPORTATION

Caltrans

LAST REVISION | DATE PLOTTED => 26-OCT-2022 | TIME PLOTTED => 13:53 | 10-26-22

BORDER LAST REVISED 8/5/2020

USERNAME =>
DGN FILE => 01170002451b000_PM 43.54.dgn

RELATIVE BORDER SCALE IS IN INCHES 0 1 2 3

UNIT 0312

PROJECT NUMBER & PHASE 01160000351

Dist	COUNTY	LOCATION CODE	POST MILES TOTAL PROJECT	SHEET No.	TOTAL SHEETS
01	HUM	101			78

REGISTERED CIVIL ENGINEER DATE

PLANS APPROVAL DATE

THE STATE OF CALIFORNIA, ITS OFFICERS OR AGENTS SHALL NOT BE RESPONSIBLE FOR THE ACCURACY OR COMPLETENESS OF SCANNED COPIES OF THIS PLAN SHEET.

REGISTERED PROFESSIONAL ENGINEER No. Exp. CIVIL STATE OF CALIFORNIA

PRELIMINARY DESIGN ONLY FOR REVIEW

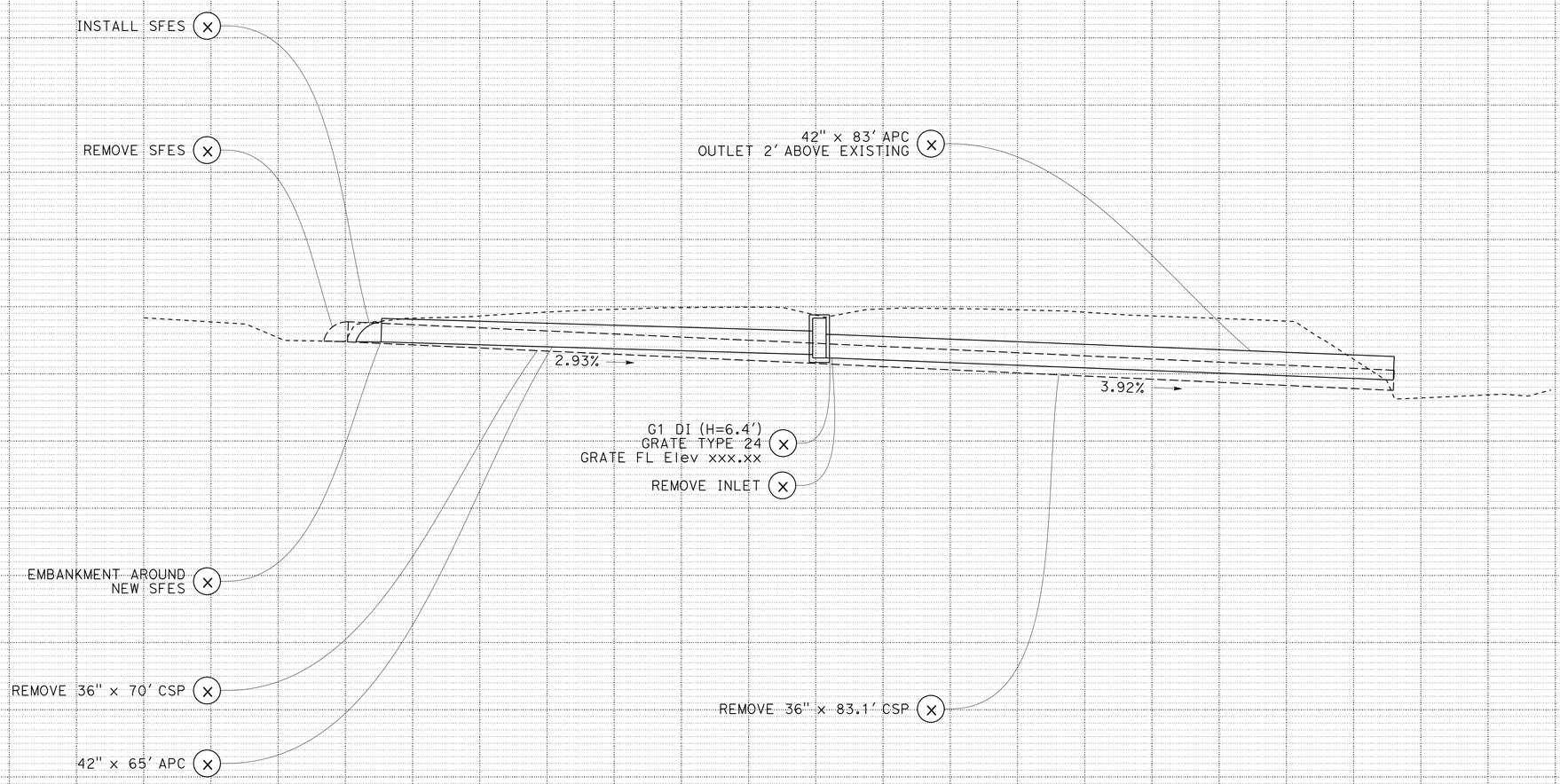

DRAINAGE SYSTEM No. 32

PM 44.17

DRAINAGE PROFILES

SCALE: 1" = 10'

DP-32

CALCULATED-DESIGNED BY

CHECKED BY

REVISED BY

DATE REVISED

Daniel Anderson

FUNCTIONAL SUPERVISOR

Matt Smith

STATE OF CALIFORNIA - DEPARTMENT OF TRANSPORTATION

Caltrans

LAST REVISION DATE PLOTTED => 26-OCT-2022
TIME PLOTTED => 13:53
10-26-22

BORDER LAST REVISED 8/5/2020

USERNAME =>
DGN FILE => 01170002451b000_PM 44.17.dgn

RELATIVE BORDER SCALE IS IN INCHES 0 1 2 3

UNIT 0312

PROJECT NUMBER & PHASE 01160000351

Dist	COUNTY	LOCATION CODE	POST MILES TOTAL PROJECT	SHEET No.	TOTAL SHEETS
01	HUM	101			78

REGISTERED CIVIL ENGINEER DATE

PLANS APPROVAL DATE

THE STATE OF CALIFORNIA, ITS OFFICERS OR AGENTS SHALL NOT BE RESPONSIBLE FOR THE ACCURACY OR COMPLETENESS OF SCANNED COPIES OF THIS PLAN SHEET.

REGISTERED PROFESSIONAL ENGINEER No. Exp. CIVIL STATE OF CALIFORNIA

PRELIMINARY DESIGN ONLY FOR REVIEW

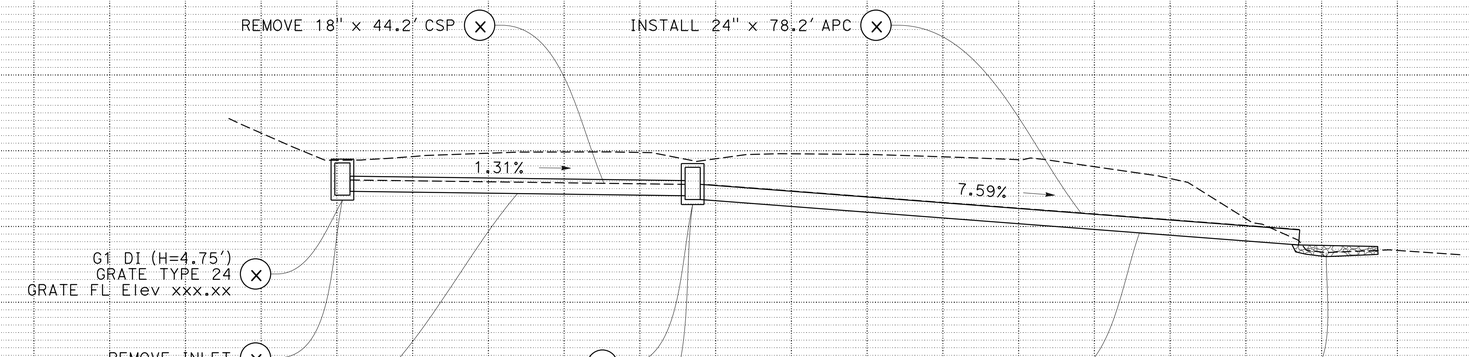

DRAINAGE SYSTEM No. 33

PM 45.25

DRAINAGE PROFILES

SCALE: 1" = 10'

DP-33

REVISED BY | DATE REVISED

CALCULATED-DESIGNED BY: Daniel Anderson

CHECKED BY

FUNCTIONAL SUPERVISOR: Matt Smith

STATE OF CALIFORNIA - DEPARTMENT OF TRANSPORTATION

Caltrans

LAST REVISION DATE PLOTTED => 26-OCT-2022 TIME PLOTTED => 13:53

10-26-22

BORDER LAST REVISED 8/5/2020

USERNAME =>
DGN FILE => 01170000245ib000_PM 45.25.dgn

RELATIVE BORDER SCALE IS IN INCHES 0 1 2 3

UNIT 0312

PROJECT NUMBER & PHASE 01160000351

Dist	COUNTY	LOCATION CODE	POST MILES TOTAL PROJECT	SHEET No.	TOTAL SHEETS
01	HUM	101			78

REGISTERED CIVIL ENGINEER DATE

PLANS APPROVAL DATE

THE STATE OF CALIFORNIA, ITS OFFICERS OR AGENTS SHALL NOT BE RESPONSIBLE FOR THE ACCURACY OR COMPLETENESS OF SCANNED IMAGES OF THIS PLAN SHEET.

REGISTERED PROFESSIONAL ENGINEER No. Exp. CIVIL STATE OF CALIFORNIA

PRELIMINARY DESIGN ONLY FOR REVIEW

60" x 180' WSP
(TRENCHLESS INSTALLATION)

STREAM RESTORATION
(RAISE FL ELEV. 15' APROX.)
CLAY PLUG

60" CSP ELBOW

8.37%

MATCH LINE

REMOVE 54" x 15' CSP

REMOVE SFES

ABANDON 54" x 290' CSP

CABLE ANCHORAGE SYSTEM

60" x 136' CSP DD

MATCH LINE

50.01%

G2 DI (H=8.5')
GRATE TYPE 24
GRATE FL Elev xxx.xx

60" x 75' APC

REMOVE 54" x 100' CSP

CONCRETE RSP

4.32%

200 190 180 170 180 170 160 150 140 130 120

DRAINAGE SYSTEM No. 34

PM 47.01

DRAINAGE PROFILES

SCALE: 1" = 10'

DP-34

REVISED BY | DATE REVISED

Daniel Anderson

CALCULATED-DESIGNED BY | CHECKED BY

FUNCTIONAL SUPERVISOR

Matt Smith

STATE OF CALIFORNIA - DEPARTMENT OF TRANSPORTATION

Caltrans

LAST REVISION | DATE PLOTTED => 26-OCT-2022 | TIME PLOTTED => 13:53

10-26-22

BORDER LAST REVISED 8/5/2020

USERNAME =>
DGN FILE => 01170002451b000_PM 47.01.dgn

RELATIVE BORDER SCALE IS IN INCHES 0 1 2 3

UNIT 0312

PROJECT NUMBER & PHASE 01160000351

Dist	COUNTY	LOCATION CODE	POST MILES TOTAL PROJECT	SHEET No.	TOTAL SHEETS
01	HUM	101			78

REGISTERED CIVIL ENGINEER DATE

PLANS APPROVAL DATE

THE STATE OF CALIFORNIA, ITS OFFICERS OR AGENTS SHALL NOT BE RESPONSIBLE FOR THE ACCURACY OR COMPLETENESS OF SCANNED IMAGES OF THIS PLAN SHEET.

REGISTERED PROFESSIONAL ENGINEER No. Exp. CIVIL STATE OF CALIFORNIA

PRELIMINARY DESIGN ONLY FOR REVIEW

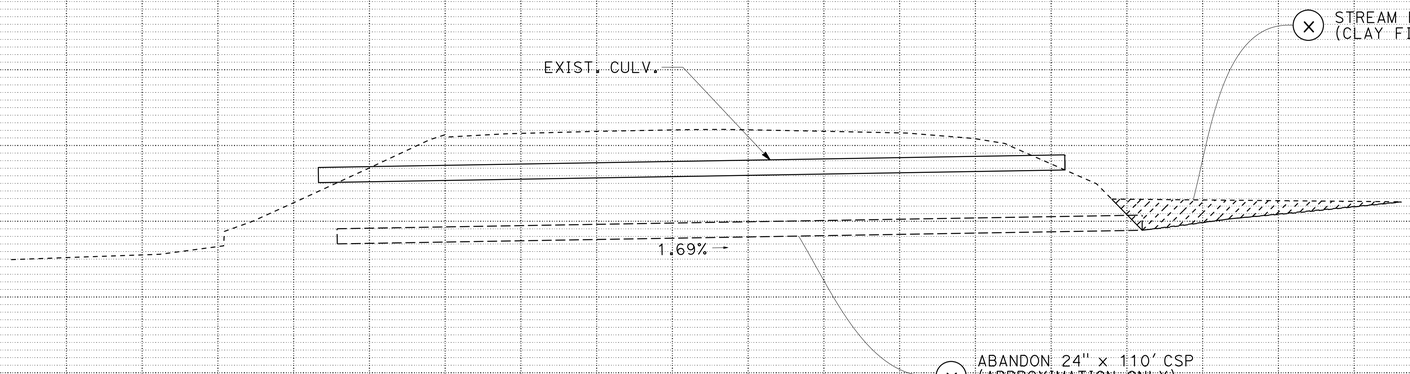

DRAINAGE SYSTEM No. 35

PM 49.86

DRAINAGE PROFILES

SCALE: 1" = 10'

DP-35

REVISED BY | DATE REVISED

Daniel Anderson

CALCULATED-DESIGNED BY | CHECKED BY

FUNCTIONAL SUPERVISOR: Matt Smith

STATE OF CALIFORNIA - DEPARTMENT OF TRANSPORTATION

Caltrans

LAST REVISION | DATE PLOTTED => 26-OCT-2022 | TIME PLOTTED => 13:53 | 10-26-22

BORDER LAST REVISED 8/5/2020 | USERNAME => | DGN FILE => 01170002451b000_PM 49.86.dgn | RELATIVE BORDER SCALE IS IN INCHES 0 1 2 3 | UNIT 0312 | PROJECT NUMBER & PHASE 01160000351

Dist	COUNTY	LOCATION CODE	POST MILES TOTAL PROJECT	SHEET No.	TOTAL SHEETS
01	HUM	101			78

REGISTERED CIVIL ENGINEER DATE

PLANS APPROVAL DATE

THE STATE OF CALIFORNIA, ITS OFFICERS OR AGENTS SHALL NOT BE RESPONSIBLE FOR THE ACCURACY OR COMPLETENESS OF SCANNED COPIES OF THIS PLAN SHEET.

REGISTERED PROFESSIONAL ENGINEER No. Exp. CIVIL STATE OF CALIFORNIA

PRELIMINARY DESIGN ONLY FOR REVIEW

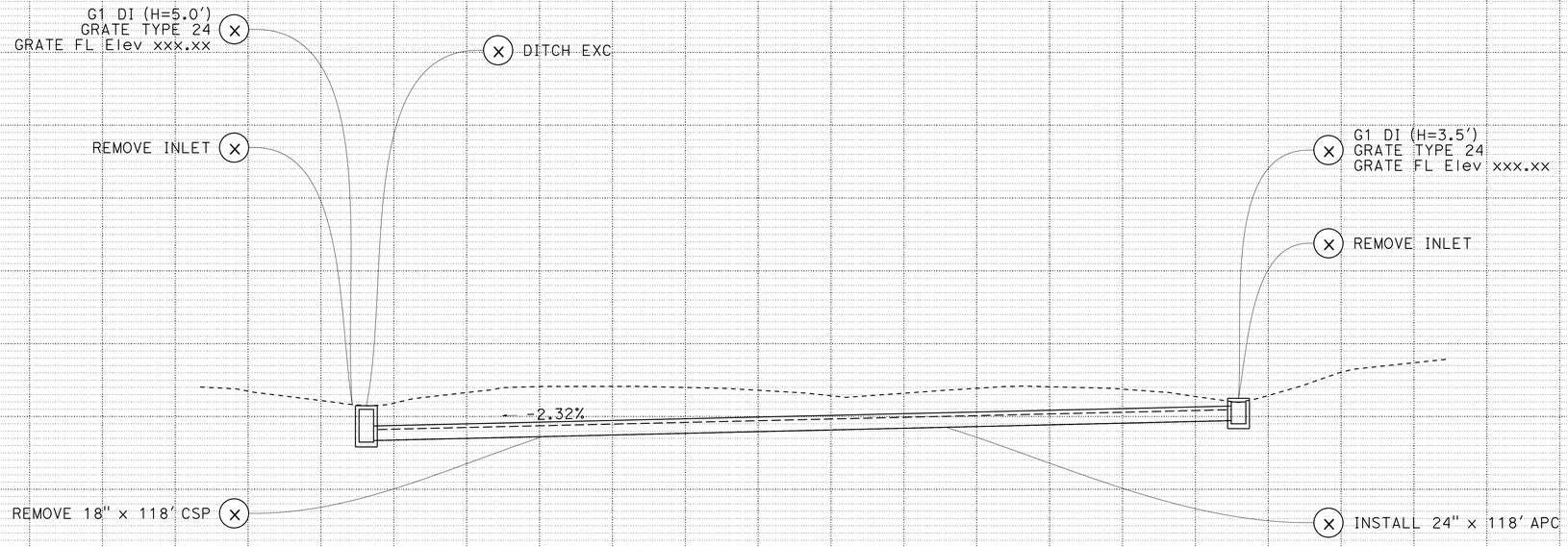

DRAINAGE SYSTEM No. 36A

PM 52.92A

DRAINAGE PROFILES

SCALE: 1" = 10' **DP-36A**

LAST REVISION DATE PLOTTED => 26-OCT-2022
10-26-22 TIME PLOTTED => 13:53

REVISED BY | DATE REVISED

CALCULATED-DESIGNED BY: Daniel Anderson
CHECKED BY:

FUNCTIONAL SUPERVISOR: Matt Smith

STATE OF CALIFORNIA - DEPARTMENT OF TRANSPORTATION
Caltrans

BORDER LAST REVISED 8/5/2020

USERNAME =>
DGN FILE => 0117000245ib000_PM 52.92A.dgn

RELATIVE BORDER SCALE IS IN INCHES 0 1 2 3

UNIT 0312

PROJECT NUMBER & PHASE 01160000351

Dist	COUNTY	LOCATION CODE	POST MILES TOTAL PROJECT	SHEET No.	TOTAL SHEETS
01	HUM	101			78

REGISTERED CIVIL ENGINEER DATE

PLANS APPROVAL DATE

THE STATE OF CALIFORNIA, ITS OFFICERS OR AGENTS SHALL NOT BE RESPONSIBLE FOR THE ACCURACY OR COMPLETENESS OF SCANNED COPIES OF THIS PLAN SHEET.

PRELIMINARY DESIGN ONLY FOR REVIEW

REGISTERED PROFESSIONAL ENGINEER No. Exp. CIVIL STATE OF CALIFORNIA

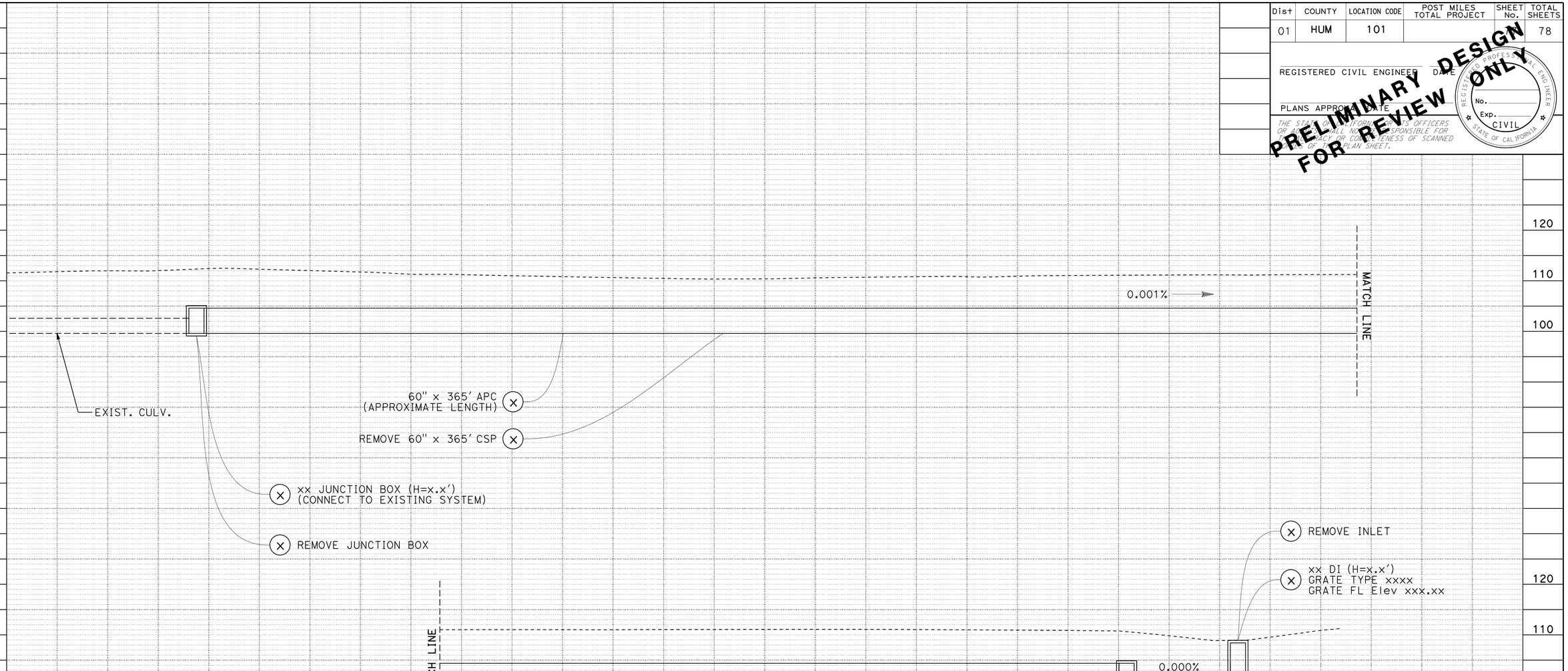

DRAINAGE SYSTEM No. 36B

PM 52.92B

DRAINAGE PROFILES

SCALE: 1" = 10'

DP-36B

REVISED BY | DATE REVISED

Daniel Anderson

CALCULATED-DESIGNED BY | CHECKED BY

FUNCTIONAL SUPERVISOR

Matt Smith

STATE OF CALIFORNIA - DEPARTMENT OF TRANSPORTATION

Caltrans

LAST REVISION DATE PLOTTED => 26-OCT-2022
TIME PLOTTED => 13:53
10-26-22

BORDER LAST REVISED 8/5/2020

USERNAME =>
DGN FILE => 01170000245ib000_PM 52.92B.dgn

RELATIVE BORDER SCALE IS IN INCHES 0 1 2 3

UNIT 0312

PROJECT NUMBER & PHASE 01160000351

Dist	COUNTY	LOCATION CODE	POST MILES TOTAL PROJECT	SHEET No.	TOTAL SHEETS
01	HUM	101			78

REGISTERED CIVIL ENGINEER DATE

PLANS APPROVAL DATE

THE STATE OF CALIFORNIA, ITS OFFICERS OR AGENTS SHALL NOT BE RESPONSIBLE FOR THE ACCURACY OR COMPLETENESS OF SCANNED COPIES OF THIS PLAN SHEET.

REGISTERED PROFESSIONAL ENGINEER No. Exp. CIVIL STATE OF CALIFORNIA

PRELIMINARY DESIGN ONLY FOR REVIEW

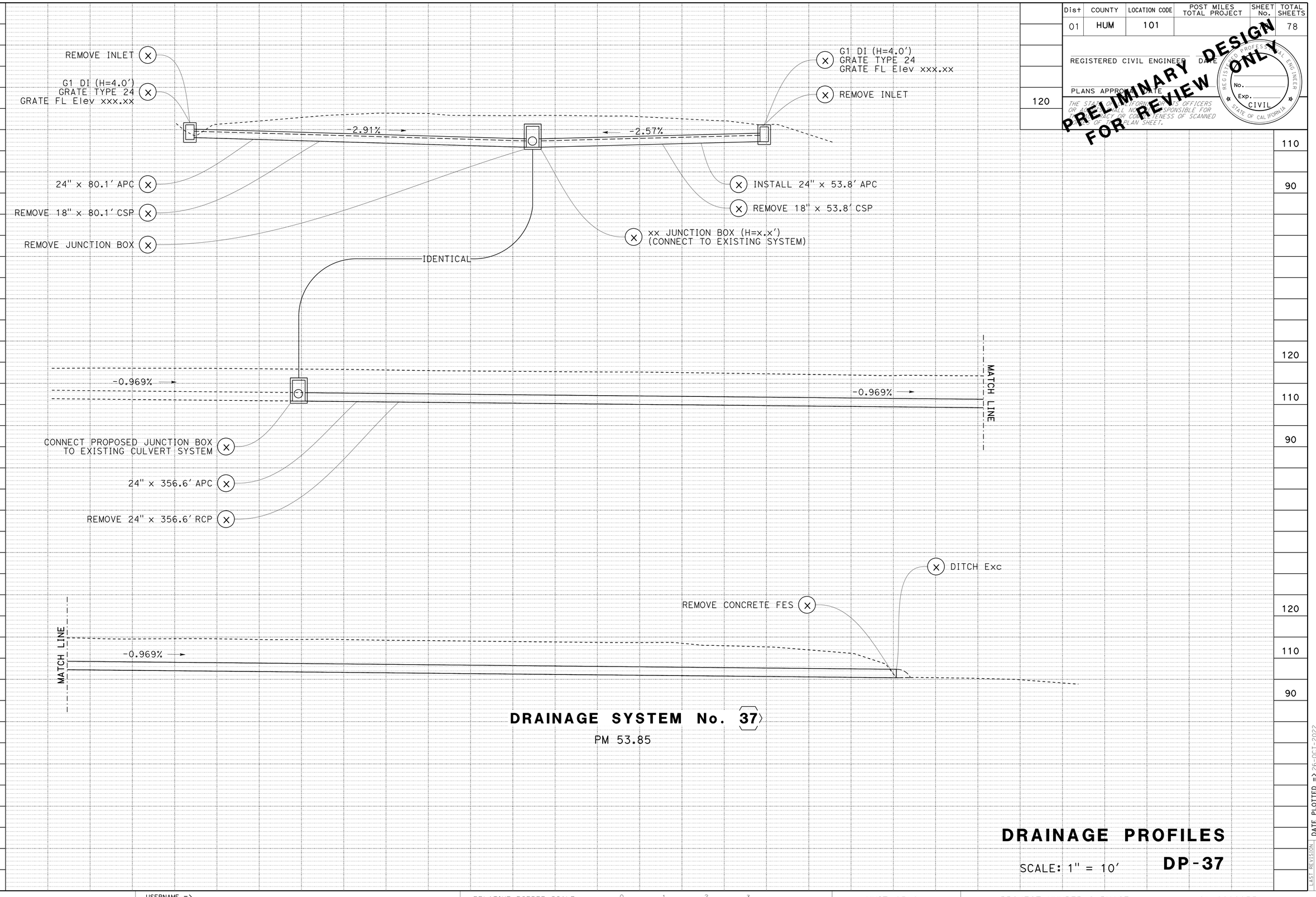

DRAINAGE SYSTEM No. 37

PM 53.85

DRAINAGE PROFILES

SCALE: 1" = 10'

DP-37

REVISED BY | DATE REVISED

Daniel Anderson

CALCULATED-DESIGNED BY | CHECKED BY

FUNCTIONAL SUPERVISOR: Matt Smith

STATE OF CALIFORNIA - DEPARTMENT OF TRANSPORTATION

Caltrans

LAST REVISION | DATE PLOTTED => 26-OCT-2022 | TIME PLOTTED => 13:53

10-26-22

BORDER LAST REVISED 8/5/2020

USERNAME =>

DGN FILE => 01170002451b000_PM 53.85.dgn

RELATIVE BORDER SCALE IS IN INCHES 0 1 2 3

UNIT 0312

PROJECT NUMBER & PHASE 01160000351

NOTE:
WHEN PARCEL LINES DISAGREE WITH EXISTING RIGHT OF WAY, PRIORITY IS GIVEN TO RIGHT OF WAY.

Dist	COUNTY	ROUTE	POST MILES TOTAL PROJECT	SHEET No.	TOTAL SHEETS

REGISTERED CIVIL ENGINEER — DATE

PRELIMINARY DESIGN FOR REVIEW ONLY

REGISTERED PROFESSIONAL ENGINEER — No. — Exp. — CIVIL — STATE OF CALIFORNIA

THE STATE OF CALIFORNIA OR ITS OFFICERS OR AGENTS SHALL NOT BE RESPONSIBLE FOR THE ACCURACY OR COMPLETENESS OF SCANNED IMAGES OF THIS PLAN SHEET.

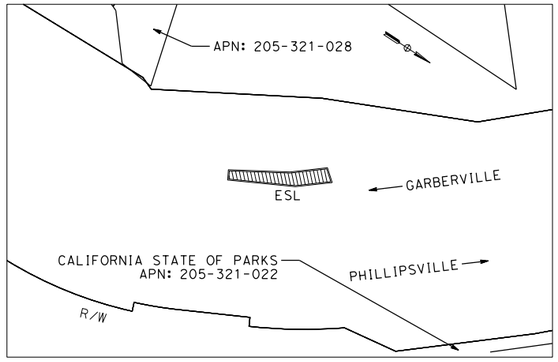

PM 46.67 STAGING FOR
DRAINAGE SYSTEM No. 34

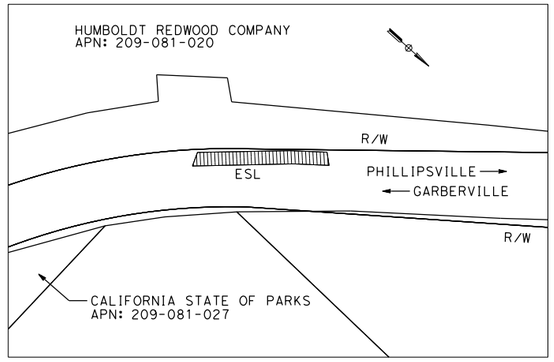

PM 44.00 STAGING FOR
DRAINAGE SYSTEM No. 31

LEGEND

R/W

STAGING AREA

ESL

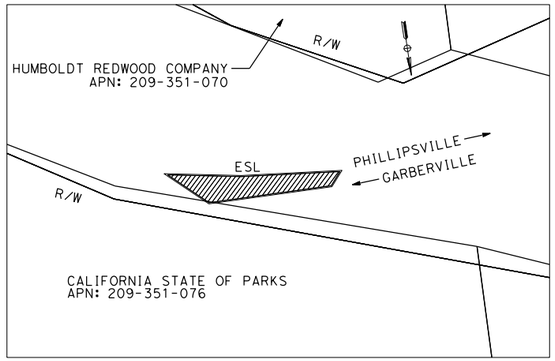

PM 40.7 STAGING FOR
DRAINAGE SYSTEM No. 24
DRAINAGE SYSTEM No. 25
DRAINAGE SYSTEM No. 26

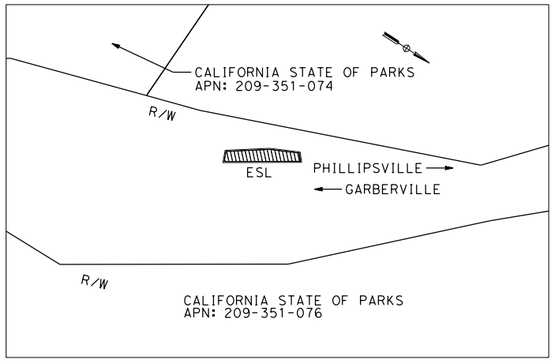

PM 41.2 STAGING FOR
DRAINAGE SYSTEM No. 24

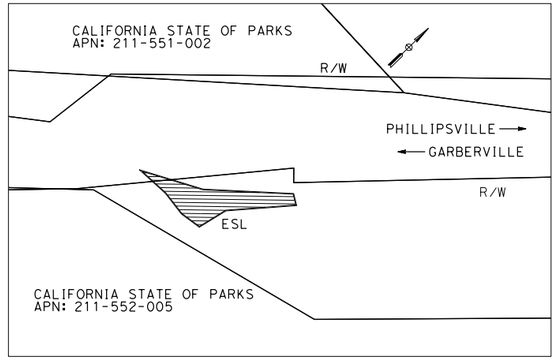

PM 35.96 STAGING FOR
DRAINAGE SYSTEM No. 18
DRAINAGE SYSTEM No. 19

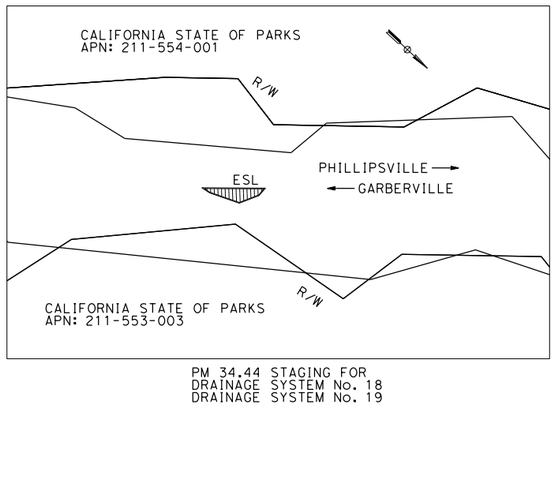

PM 34.44 STAGING FOR
DRAINAGE SYSTEM No. 18
DRAINAGE SYSTEM No. 19

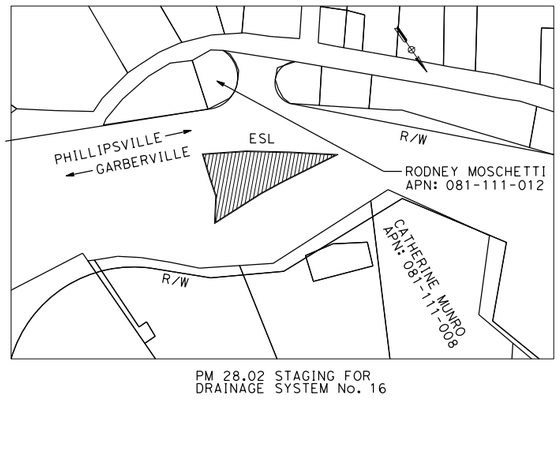

PM 28.02 STAGING FOR
DRAINAGE SYSTEM No. 16

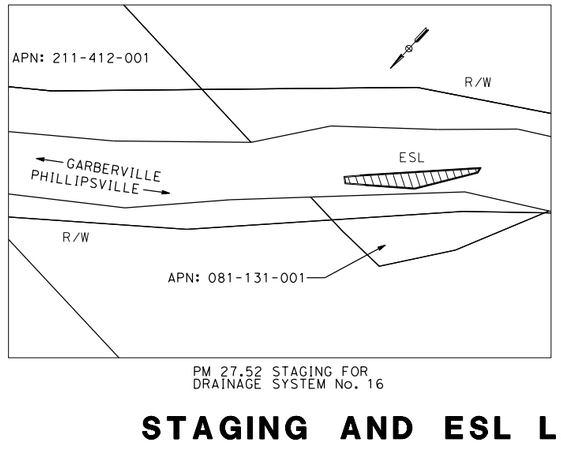

PM 27.52 STAGING FOR
DRAINAGE SYSTEM No. 16

STAGING AND ESL LAYOUTS

NO SCALE

L-1

REVISED BY | DATE REVISED

CALCULATED-DESIGNED BY | CHECKED BY

FUNCTIONAL SUPERVISOR

STATE OF CALIFORNIA - DEPARTMENT OF TRANSPORTATION

Caltrans®

LAST REVISION | DATE PLOTTED => 6/23/2022
TIME PLOTTED => 4:13:06 PM

BORDER LAST REVISED 8/5/2020 | USERNAME => | DGN FILE => ...\46.67-27.52.dgn | RELATIVE BORDER SCALE IS IN INCHES 0 1 2 3 | UNIT | PROJECT NUMBER & PHASE

Dist	COUNTY	ROUTE	POST MILES TOTAL PROJECT	SHEET No.	TOTAL SHEETS

REGISTERED CIVIL ENGINEER — DATE

PLANS APPROVAL DATE

THE STATE OF CALIFORNIA OR ITS OFFICERS OR AGENTS SHALL NOT BE RESPONSIBLE FOR THE ACCURACY OR COMPLETENESS OF SCANNED IMAGES OF THIS PLAN SHEET.

REGISTERED PROFESSIONAL ENGINEER — No. — Exp. — CIVIL — STATE OF CALIFORNIA

PRELIMINARY DESIGN FOR REVIEW ONLY

NOTE:
WHEN PARCEL LINES DISAGREE WITH EXISTING RIGHT OF WAY, PRIORITY IS GIVEN TO RIGHT OF WAY.

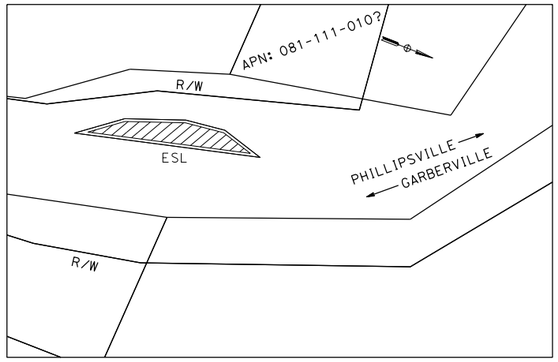

PM 26.78 STAGING FOR
DRAINAGE SYSTEM No. 15

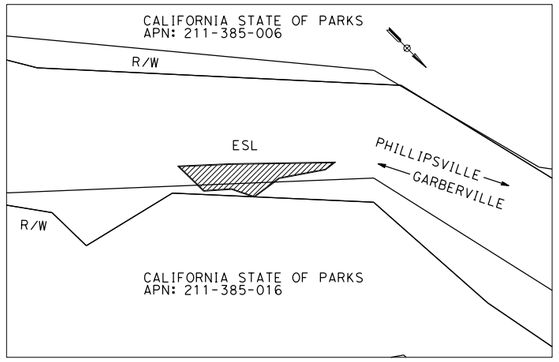

PM 26.55 STAGING FOR
DRAINAGE SYSTEM No. 14
DRAINAGE SYSTEM No. 15

LEGEND

R/W

STAGING AREA

ESL

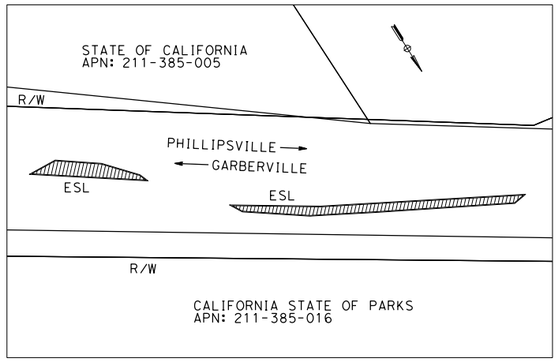

PM 25.77 AND 25.56 STAGING FOR
DRAINAGE SYSTEM No. 14

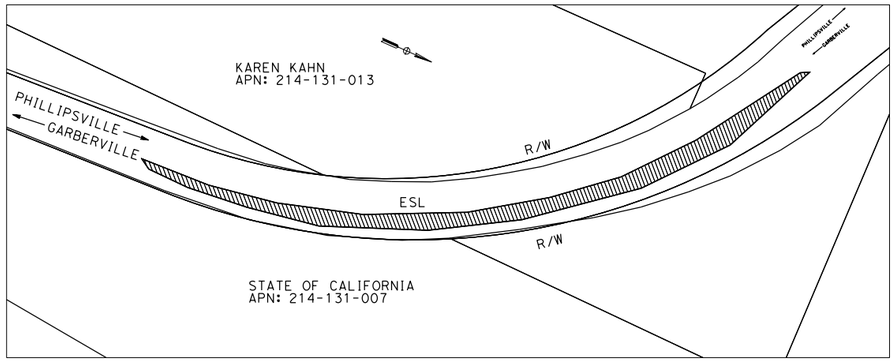

PM 20.46 STAGING FOR
DRAINAGE SYSTEM No. 12
DRAINAGE SYSTEM No. 13

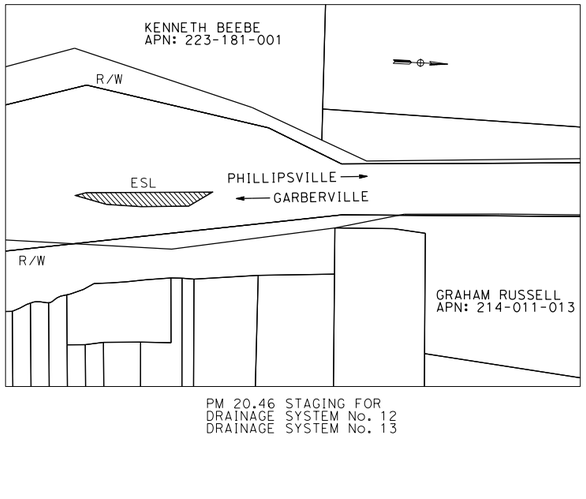

PM 20.46 STAGING FOR
DRAINAGE SYSTEM No. 12
DRAINAGE SYSTEM No. 13

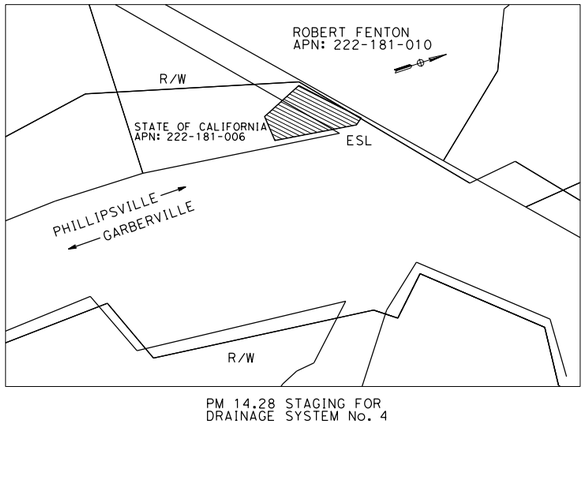

PM 14.28 STAGING FOR
DRAINAGE SYSTEM No. 4

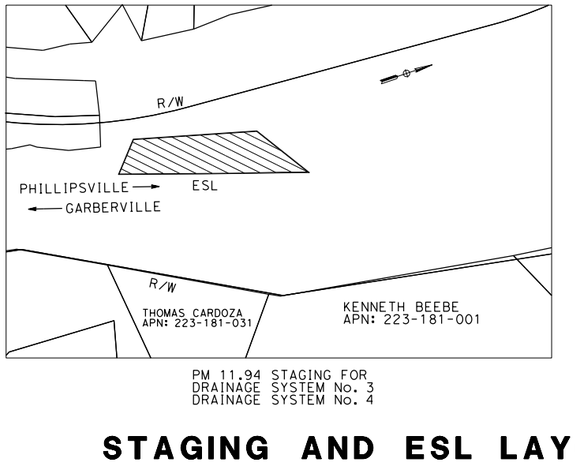

PM 11.94 STAGING FOR
DRAINAGE SYSTEM No. 3
DRAINAGE SYSTEM No. 4

STAGING AND ESL LAYOUTS

NO SCALE

L-2

REVISED BY	DATE REVISED

CALCULATED-DESIGNED BY

CHECKED BY

FUNCTIONAL SUPERVISOR

STATE OF CALIFORNIA - DEPARTMENT OF TRANSPORTATION

Caltrans

LAST REVISION

DATE PLOTTED => 6/23/2022
TIME PLOTTED => 4:13:14 PM

BORDER LAST REVISED 8/5/2020

USERNAME =>
DGN FILE => ...\26.78-11.94.dgn

RELATIVE BORDER SCALE IS IN INCHES 0 1 2 3

UNIT

PROJECT NUMBER & PHASE

Appendix F. Final Section 4(f) *de minimis* Evaluation with Concurrence

This page left intentionally blank

Section 4(f) *de minimis* Evaluation

Introduction

This section of the document discusses *de minimis* impact determinations under Section 4(f). Section 6009(a) of SAFETEA-LU amended Section 4(f) legislation at 23 United States Code (USC) 138 and 49 USC 303 to simplify the processing and approval of projects with only *de minimis* impacts on lands protected by Section 4(f). This amendment provides that once the U.S. Department of Transportation (USDOT) determines that a transportation use of Section 4(f) property, after consideration of any impact avoidance, minimization, and mitigation or enhancement measures, results in a *de minimis* impact on that property, an analysis of avoidance alternatives is not required, and the Section 4(f) evaluation process is complete. FHWA's final rule on Section 4(f) *de minimis* findings is codified in 23 Code of Federal Regulations (CFR) 774.3 and CFR 774.17.

Responsibility for compliance with Section 4(f) has been assigned to the Department of Transportation (Caltrans) pursuant to 23 USC 326 and 327, including *de minimis* impact determinations, as well as coordination with those agencies that have jurisdiction over a Section 4(f) resource that may be affected by a project action.

Applicability and Findings

The following documentation demonstrates that criteria for the Section 4(f) have been applied and are appropriate for this action.

The impacts of a transportation project on a park, recreation area, or wildlife and waterfowl refuge that qualifies for Section 4(f) protection may be determined to be *de minimis* if:

1. The transportation use of the Section 4(f) resource, together with any impact avoidance, minimization, and mitigation or enhancement measures incorporated into the project, does not adversely affect the activities, features, and attributes that qualify the resource for protection under Section 4(f);

2. The official(s) with jurisdiction over the property are informed of FHWA's or FTA's intent to make the *de minimis* impact finding based on their written concurrence that the project would not adversely affect the activities, features, and attributes that qualify the property for protection under Section 4(f); and

3. The public has been afforded an opportunity to review and comment on the effects of the project on the protected activities, features, and attributes of the Section 4(f) resource.

Project Location

The project is located on United States Highway 101 (US 101) in Humboldt County between post miles (PMs) 2.40 and M53.85.

Purpose

The purpose of this project is to preserve the roadway and prevent damage from storm events by repairing failing drainage systems.

Need

The Culvert Inspection Program identified locations with drainage systems that have exceeded their design life and need repair. The project is necessary to repair failed and deteriorated drainage systems and prevent potential roadway damage resulting from drainage system failures.

Project Description

The HUM 101 Drainage South project (EA #01-0H640) proposes to rehabilitate drainage systems at 38 locations on US 101 in Humboldt County from PMs 2.40 to M53.85. Most drainage systems would be rehabilitated by replacing culverts using the cut and cover method, or jack and bore trenchless construction. There are no identified existing fish passage obstructions at any project locations. Proposed work includes replacement of culverts, downdrains (DD), drainage inlets (DI), headwalls, end walls, and retaining walls, and installation of rock slope protection (RSP) and rock-lined ditch. Existing culverts would be replaced in-kind or upsized based on hydraulic conditions. Refer to Table 1 for proposed work at each location.

Work may include joint sealing, invert paving, culvert or drainage inlet repair using a Portland cement concrete material, regrading of drainage channels, repair of concrete or hot mix asphalt (HMA) ditches or paved aprons, and stabilizing embankment using fill or RSP. Most culvert excavations would vary from approximately 2 to 20 feet in depth, with two locations requiring depths of up to 35 feet.

Dewatering and water diversion may be necessary at some locations if water is present at the beginning of construction. Vegetation clearing and grubbing, branch trimming, and/or removal of trees would be required for construction access and culvert replacement activities at some locations. Revegetation would be conducted within disturbed soil areas to replace vegetation removed and for soil stabilization and erosion control. Temporary erosion control would be

provided to meet water quality requirements. The project would be constructed in conformance with a stormwater pollution plan/program.

Staging may occur on the paved roadway and on paved and unpaved shoulders and pull-outs near work locations. Potential construction staging locations are identified at PMs 11.94, 14.28, 20.46, 20.70, 25.56, 25.77, 26.55, 26.78, 27.52, 28.02, 34.44, 35.96, 41.20, 40.70, 44.00, 46.67. Ramp and lane closures would be necessary at multiple locations to complete the work. Most of the work would occur within the existing Caltrans right of way. Some locations would involve work within existing drainage easements. New permanent drainage easements and temporary construction easements (TCEs) would be required at some locations (see Table 2).

Five drainage systems would involve project activities performed within existing or proposed drainage easements and/or TCEs on California State Parks property. These locations are described below and summarized in Table 1. There are no known archaeological or historic sites within these locations. Two locations (PMs R43.17, R45.25) are adjacent to State Parks, but all work at these locations will be conducted within Caltrans right of way.

The proposed work presented here is based on preliminary designs and will continue to be refined until project plans are completed at the “Ready to List” phase scheduled for spring 2024. Environmental permits will be required at many locations. Refer to Section 1.3 of the Environmental Document for a complete list of permits and approvals required for the project.

Table 1. Proposed Work at Drainage System Locations

Location	Post Mile	Method	Proposed Work
1	2.40	Cut & Cover	Remove headwall, 36″-diameter x 104′-long corrugated steel pipe (CSP), rock energy dissipator (RED), existing concrete slab beneath the RED, and ±24″-dbh tan oak tree. Abandon 36″-diameter x 60′-long CSP. Install headwall, cable railing, 36″-diameter x 76’-long alternative pipe culvert (APC), 36″-diameter x 76′-long CSP DD, manhole, three elbows, cable anchors, and rock slope protection (RSP). Place hot mix asphalt (HMA) and aggregate base in various areas. (CDFW 1600 agreement required.)
2	R7.51	Cut & Cover	Remove 42″-diameter x 30′-long CSP, drainage inlet (DI), 42″-diameter x 20′-long CSP DD, and 12″-diameter x 8′-long CSP (standpipe). Abandon 12″-diameter x 15′-long CSP (standpipe) and 42″-diameter x 425′-long CSP. Replenish existing RSP. Install 42″-diameter x 314′-long APC, two elbows, cable anchorage system, DI, 42″-diameter x 95′-long CSP DD, and steel flared end section (SFES). Place minor concrete to repair concrete-lined ditch (in-kind). Engineering shoring plan required for deep cut. (CDFW 1600 agreement required.)
10	R19.43	Trenchless	Remove SFES. Abandon 30″-diameter x 411′-long CSP. Install SFES, 60″-diameter x 367′-long WSP, and rock-lined ditch. May need dewatering and clear water diversion. (CDFW 1600 agreement may be required.)
19	37.64	Cut & Cover and Trenchless	Remove one 16″-dbh Douglas-fir tree, 30″-diameter x 30′-long CSP, 18″-diameter x 35′-long CSP DD, 18″-diameter x 54′-long CSP, two SFES, and 30″-diameter x 42′-long CSP DD. Install two SFES, 24″-diameter x 31′-long CSP DD, 24″-diameter x 54′-long APC, 42″-diameter x 153′-long WSP, two elbows, and RSP. Replace DI (in kind). Add fill to increase elevation at inlet approach. Repair eroded area at inlet. Clear water diversion anticipated. (CDFW 1600 agreement required.)
20	39.01	Trenchless	Remove one 10″-dbh redwood tree, SFES, 24″-diameter x 40′-long CSP, and 24″-diameter x 123′-long CSP DD. Install two SFES, 36″-diameter x 162′-long WSP, RSP, embankment, and 24″-diameter x 36′-long CSP DD. (CDFW 1600 agreement may be required.)

In addition, the project would generate short-term construction traffic and result in temporary lane and ramp closures. Traffic impacts are discussed later in this document.

PM 2.40

Environmental Setting

Drainage System #1 (PM 2.40) is at the north end of Richardson Grove State Park on a forested slope below the grade of US 101 (APN 033-251-001). An unpaved road is accessed from a pullout on US 101 and continues down the hill, providing access to the downdrain and outlet. A culvert passes intermittent flows received upgradient of US 101 from the west, which ultimately discharges to the South Fork Eel River. There are no known trails at this location.

Scope of Work

Within State Parks property, work at this location would include replacing a 36-inch-diameter culvert and downdrain in an alternate alignment approximately 6-feet offset from the existing alignment to avoid a retaining wall; installing a manhole in the access road; removing the energy riser, rock energy dissipator and concrete slab beneath the dissipator at the outlet; replacing the downdrain; and placing RSP at the outlet. Culvert replacement would use the cut and cover method. One ±24-inch-dbh tan oak tree would be removed between the access road and US 101. Minor vegetation removal would be required. Work within the existing Caltrans right of way (ROW) would include replacing the culvert under US 101 and inlet improvements. Work for all activities at this location is expected to take up to 7 days.

Use

The total area of use on State Parks land would be approximately 0.45 acre. Uses at this location would include:

- The establishment of a new permanent drainage easement, including ongoing access to the site for maintenance.
- Temporary access to the site during construction to include traffic control on US 101 and full closure of the access road each day work is performed. Steel plates would be placed over the trench to provide passage on the State Parks road at the end of each workday.
- Removal of one 24-inch-dbh tan oak tree between US 101 and the access road to avoid an existing soldier pile wall when replacing the culvert.
- Removal of minor vegetation to replace the downdrain. Minor vegetation includes young saplings of predominantly tan oak and bay laurel, in addition to French broom.

The uses at this location do not adversely affect the activities, features, and attributes of the State Park resource because the activities are temporary, of short duration, and would improve drainage that flows through the State Park property, reducing scour and negative downstream

effects. The drainage easement would allow Caltrans to maintain the improved facilities, such as removing debris from drainage systems before the rainy season, which would help protect downstream resources. Vegetation removal would be insignificant considering the robust recruitment of trees occurring naturally at the site. Other than the access road, the site is not adjacent to a known trail, campground, or other Park facilities, and there is no clear evidence of use by recreationists at this location. The access road appears to be used by State Parks personnel. Closure of the road during trenching would be limited to a few days and would be pre-arranged with State Parks personnel. Lane closures on US 101 to perform work within the ROW would be scheduled to avoid special events and peak travel periods. These measures would be memorialized in the TCE, Transportation Management Plan (TMP), and the project specifications package. A CDFW 1600 Agreement is anticipated at this location. For these reasons, the *de minimis* finding can be made.

PM 7.51

Environmental Setting

Within Benbow State Recreation Area, Drainage System #2 (PM 7.51) is located behind a State Parks gate with a dirt parking area and vehicle access to the South Fork Eel River (APN 033-191-001). The lower part of this drainage system, including the outlet, is located approximately 700 feet north of the parking area at the end of the unpaved road within an area dominated by coyote brush and annual grasses. The outlet is approximately 125 feet east of the river. The drainage system receives ephemeral flows from the east side of US 101. Between the outlet and the river is a grove of madrone trees and some individual oaks that are outside the project limits to the south. Willows are the dominant vegetation at the outlet.

Scope of Work

Work within State Parks property includes replacing a 42-inch-diameter culvert and downdrain and placing RSP at the outlet. There is an existing drainage easement at this location. Work within the existing Caltrans ROW includes replacing the rest of the drainage system across US 101 using the cut and cover method of installation. One segment of the culvert crosses under Benbow Drive (County ROW) between the Caltrans ROW and State Parks property. Work for all activities at this location, including work within the Caltrans and County ROW, is expected to take approximately 15 days.

Use

The total area of use on State Parks land would be approximately 0.54 acre. Uses at this location would include:

- Temporary access and staging adjacent to the existing drainage easement. Caltrans would use the State Parks road to access the staging area adjacent to the outlet. There would be no obstruction of the parking area or river access.

- Minor vegetation removal to access the staging and work area. Vegetation would predominantly include annual grasses, coyote brush, and some willows at the outlet.

The uses at this location do not adversely affect the activities, features, and attributes of the State Park resource because the activities are temporary and of short duration and would improve drainage that flows through the Recreation Area, reducing negative downstream effects. Construction activities would not obstruct public access to the river, road, or parking area. Vegetation removal would be limited to only that required for access and staging for work at the outlet. Substantial staging area exists in the ROW for all other work. The oaks and madrones are outside the project limits and would not be impacted by the project. Work at this location would require a Section 401 Water Quality Certification (401) from the North Coast Regional Water Quality Control Board (NCRWQCB), which would include the replacement of riparian vegetation. Willow cuttings could be collected before willow removal and used for revegetation. A CDFW 1600 Agreement is anticipated at this location. For these reasons, the *de minimis* finding can be made.

PM R19.43

Environmental Setting

The portion of Drainage System #10 (PM R19.43) within State Parks property consists of a spoils storage area and forest adjacent to a roadside pullout and former truck scale (APN 214-011-16). The terrain is flat to gently sloping in the disturbed areas and moderately sloping in the forested area. The drainage system receives intermittent flows from the south side of US 101 and discharges into the forest within Humboldt Redwoods State Park, approximately 45 feet from the bank of the South Fork Eel River.

Scope of Work

Work within State Parks would involve replacing a 30-inch-diameter by 411-foot-long culvert with a 60-inch-diameter by 367-foot-long culvert using the jack and bore trenchless installation method. The existing culvert would be abandoned. The new culvert would be approximately 44 feet shorter than the existing culvert. RSP would be installed at the outlet and connected to a new rock-lined ditch. This work would require minor vegetation removal at the outlet and grading to create an approximately 20-foot-long by 20-foot-wide pad for the trenchless equipment, and access to the pad. Work for all activities at this location is expected to take up to 20 days.

Use

The total area of use on State Parks land would be approximately 0.95 acre. Uses at this location would include:

- The establishment of a new permanent drainage easement, including ongoing access to the site for maintenance.

- Temporary access to the site during construction.

The uses at this location do not adversely affect the activities, features, and attributes of the State Park resource because the activities are temporary, of short duration, and would improve the drainage system that transports flows through the Park, reducing scour and negative downstream effects. Work would not require tree removal. The rock-lined ditch and the added RSP at the outlet would reduce the potential for erosion and downstream sedimentation. Work at this location would require a Section 401 Water Quality Certification (401) from the North Coast Regional Water Quality Control Board (NCRWQCB). A CDFW 1600 Agreement is also anticipated at this location. The site is not adjacent to a trail, campground, or other State Park facilities, and there is no clear evidence of use by recreationists at this location. For these reasons, the *de minimis* finding can be made.

PM 37.64

Environmental Setting

Within Humboldt Redwoods State Park, Drainage System #19 (PM 37.64) is on and adjacent to the access road to High Rock Conservation Camp (APN 209-361-19). Access to the site is from State Route (SR) 254. There is also direct access to the site from US 101 through a locked gate near PM 37.64. The terrain is gently to moderately sloping within an open canopy of mature forest. The drainage system receives intermittent flows from State Parks property, delivered from the forested hillside west of US 101 and discharging to the South Fork Eel River over 900 feet east of the outlet.

Scope of Work

All work and staging at this location would be performed within the existing Caltrans ROW. Work would include replacing existing culverts using both trenchless and cut and cover methods; repairing scour and increasing the elevation at the inlet; replenishing RSP at the outlet; removing a 16-inch-dbh Douglas-fir tree, and vegetation removal. Clear water diversion and a CDFW 1600 Agreement are anticipated at this location. Because all work would occur within the Caltrans ROW, no drainage easement is required. Work is expected to take approximately 8 days.

Use

The total area of use on State Parks land would be approximately 0.23 acre. The use at this location would include temporary access to the site during construction for use of the road where it traverses State Parks. The road to High Rock Conservation Camp, which traverses State Parks property and Caltrans ROW, would be used to access the site, requiring a Right of Entry permit. This road is also used by the California Department of Forestry and Fire Protection (CAL FIRE), who leases part of the property from State Parks. Full road closure would be

required during cut and cover work for approximately two days due to trenching across the road to replace the cross culvert. Steel plates would be placed over the trench to provide passage on the road at the end of each workday. A detour from US 101 could be provided during the closure.

The use at this location does not adversely affect the activities, features, and attributes of the State Parks road because the activities are temporary, of short duration, and would improve the drainage system that transports flows through the Park and under the Park road, reducing negative downstream effects. Arrangements would be made with Parks and CAL FIRE to schedule the road closure to avoid peak travel periods. For these reasons, the *de minimis* finding can be made.

PM 39.01

Environmental Setting

Drainage System #20 (PM 39.01) is situated between the US 101 ROW to the west and the SR 254 ROW to the east (APN 209-351-75). The lower part of the drainage system and outlet are within Humboldt Redwoods State Park and dominated by redwood forest on moderately sloping terrain. There are no known trails at or adjacent to the site. There are large redwoods on both sides of the drainage inlet (DI) where the downdrain connects. The system passes ephemeral flows from the south side of US 101 to the southwest side of SR 254. These flows continue to the South Fork Eel River, approximately 1,000 feet east.

Scope of Work

Work within State Parks property would include removing one 10-inch-dbh redwood tree and replacing a 120-foot-long downdrain on the existing grade, possibly with a rock-lined ditch, and connecting it to an existing DI. To the extent feasible, any excavation required at the DI to connect the downdrain would be performed in accordance with standard measures to protect the structural root zone of large trees, including the use of root-friendly excavation and severance methods in lieu of mechanical excavators or other ripping tools. Work for the entire project is expected to take 11 days.

Use

The total area of use on State Parks land would be approximately 0.09 acre. Uses at this location would include:

- Establishment of a new permanent drainage easement.
- Temporary access to the outlet and downdrain during construction.

The uses at this location do not adversely affect the activities, features, and attributes of the State Park resource because the activities are temporary, of short duration, and would improve

the drainage system that transports flows through the Park, reducing negative downstream effects. The site is not adjacent to a known trail, campground, or other Park facilities; access to Park facilities would not be impacted. For these reasons, the *de minimis* finding can be made.

Temporary Construction Easements

Table 2 summarizes the approximate size of the area at each location that would be subject to Temporary Construction Easements. The three permanent drainage easements at PMs 2.40, R19.43, and 39.01 would be within these areas.

Table 2. Temporary Construction Easement Areas

Location (Post Mile)	Area (square feet)	Area (Acre)	Assessor Parcel Number
2.40	19,595	0.45	033-251-001
7.51	23,448	0.54	033-191-001
19.43	41,468	0.95	214-011-016
37.64	6,772	0.16	209-361-020
37.64	3,261	0.07	209-361-019
39.01	4,034	0.09	209-351-075

Traffic Delays

Most locations are situated where the highway is 4 lanes. Traffic-related delays would be most noticeable near PM 2.40 at Richardson Grove State Park where US 101 is a narrow two-lane highway with limited shoulder width. Work at this location is expected to take up to 7 days.

Construction traffic would be scheduled and routed to reduce congestion. Temporary lane and ramp closures on US 101 and SR 254 would be coordinated with adjacent projects and special events to minimize cumulative delay. Specifically, one lane in each direction of travel would be open for use by public traffic at all locations, including PM 2.40, during the following events (actual dates would be verified by the contractor):

- Redwood Run & Music Festival, 2nd weekend in June
- Reggae on the River, 1st weekend in August
- Northern Nights Music Festival, 2nd weekend in July
- Cal Poly Humboldt Graduation, 2nd weekend in May

The Transportation Management Plan (TMP) would be tailored to minimize project-related traffic delays by the effective application of project-specific traffic abatement strategies, public and

motorist information, demand management, incident management, system management, alternate route strategies, construction strategies, and other strategies. Given that traffic delays would be temporary and the same for all travelers through the project corridor (not disproportionately affecting State Parks visitors), peak travel events would be avoided, and delays would be minimized with careful planning, the *de minimis* finding can be made.

Minimization Measures

The scope of work at each location is limited to short-duration construction activities and the establishment of drainage easements which should not adversely affect the State Park resources. Standard Measures and Best Management Practices identified in Section 1.4 of the CEQA Initial Study with Proposed Mitigated Negative Declaration (Draft Environmental Document [DED]) would be implemented, including:

- Protection of tree roots and the structural root zone of large trees.
- Implementation of a Revegetation Plan to replace vegetation removed during construction.
- Any planting on State Parks land would comply with the North Coast Redwoods District Genetic Integrity Guidelines for Revegetation, Seed Collection, and Propagation dated April 13, 2003, in coordination with State Parks as needed.
- Measures to minimize the spread and transport of invasive plant species.
- Bird protection measures, including limiting vegetation removal to the period outside of the bird breeding season to protect occupied nests and eggs.
- Implementation of a TMP to minimize delays during peak travel periods and special events. The TMP will be updated throughout the life of the project to reflect changes in design, event schedules, and field conditions during construction. Every effort will be made to keep traffic flowing through areas of active construction.

To encourage communication between the appropriate Caltrans and State Park personnel prior to the scheduling of construction, the following measures are recommended:

- Notify State Parks as soon as the construction kickoff meeting has been scheduled, including the date, time, and location of the meeting. At the kickoff meeting, (1) contact information shall be exchanged between site personnel (contractor, resident engineer, environmental construction liaison) and the appropriate California State Parks representative(s) and (2) discuss the scheduling of work at the five State Park locations to minimize or avoid delays and inconvenience to the public related to construction activities.
- Notify State Parks at least 5 working days prior to initiating work at each of the State Parks locations.

DocuSign Envelope ID: 7D84EAB2-1D0D-4E31-8C76-F45604E9B2E4

Public Notice Process

Public noticing for the 4(f) evaluation was conducted concurrently with public noticing for the DED in accordance with Article 6 of the CEQA Guidelines. A Notice of Intent (NOI) to adopt the DED was published in the local paper and provided directly to adjacent landowners, responsible and trustee agencies, the State Clearinghouse, and the Humboldt County clerk to allow the public and agencies a minimum 30-day review and comment period. No comments were received regarding this Section 4(f) evaluation and *de minimis* finding during the public comment period, which ended December 9, 2022.

Written Concurrence from the Jurisdictional Agency

California State Parks is the agency with jurisdiction over the locations described in this evaluation. On June 30, 2022, a site visit was conducted with State Parks personnel Rosalind Litzky, Marisa Parish-Hanson, and Patrick Kolence, and Caltrans personnel Julie East, Julie Price, and Bryan Atkinson to discuss potential issues at each of the five sites. Feedback received has been incorporated into this evaluation. Written concurrence from State Parks on this Section 4(f) determination is requested following the public comment period, which is now closed.

Victor Bjelajac	**District Superintendent**
Name	Title
DocuSigned by: Victor Bjelajac A1FBEA009EE0488...	4/4/2023
Signature	Date