DIST.	COUNTY	ROUTE	KILOMETER POST TOTAL PROJECT	SHEET NO.	TOTAL SHEETS
04	CC, Sol	80	22.0/22.7, 0.0/1.8	329	714

Caltrans Metric

REGISTERED ENGINEER - CIVIL

7-12-99

PLANS APPROVAL DATE

REGISTERED PROFESSIONAL ENGINEER G. L. Orsolini No. 44461 Exp. 3/31/02 CIVIL STATE OF CALIFORNIA

The State of California or its officers or agents shall not be responsible for the accuracy or completeness of electronic copies of this plan sheet.

DE LEUW- PAC-STEINMAN
120 Howard Street, Suite 850
San Francisco, CA 94105

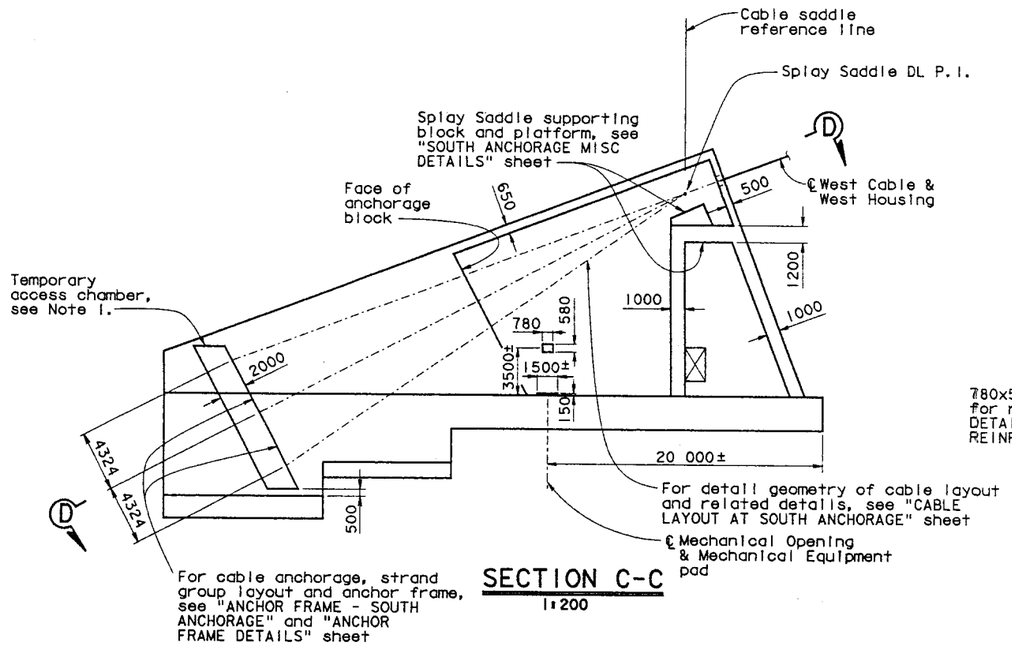

SECTION C-C
1:200

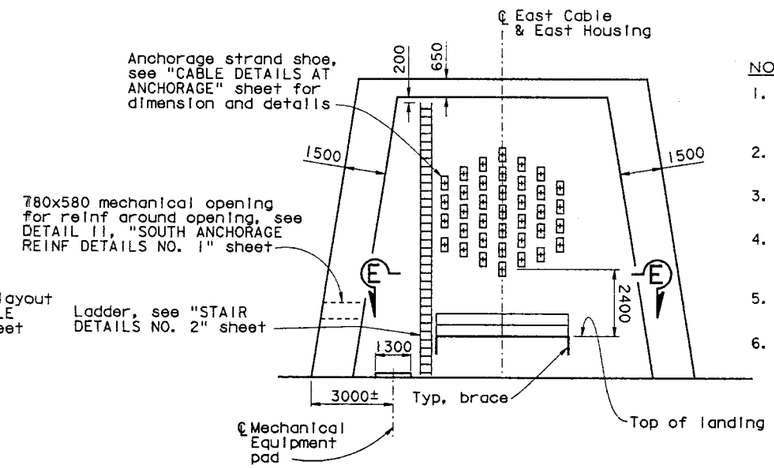

ELEVATION V-V
1:100

NOTES:

1. Temporary access chamber shall be completely filled with concrete upon completion of placement and adjustment of anchor rods.
2. For splay saddle, see "SPLAY SADDLE SOUTH" sheet.
3. For DETAIL M, see "STAIR DETAILS NO. 3" sheet.
4. For call out location of ELEVATION V-V, see "SOUTH ANCHORAGE ACCESS DETAILS NO. 1" sheet.
5. For mechanical equipment, see Mechanical Drawings.
6. Size & location of mechanical opening and equipment pad are approximate, adjustment may be needed when equipment is selected.

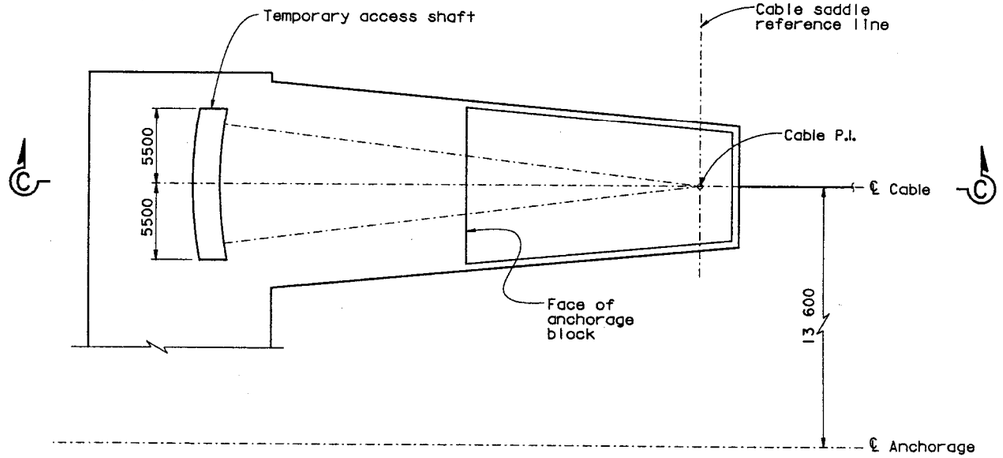

SECTION D-D
1:200

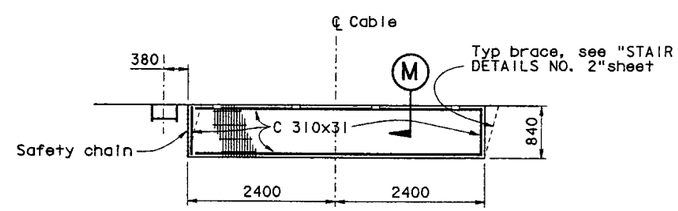

VIEW E-E
1:40

ALL DIMENSIONS ARE IN MILLIMETERS UNLESS OTHERWISE SHOWN

V. Gastoni, DESIGN OVERSIGHT; Vincent Gastoni 3/31/99, SIGN OFF DATE; Rev. Date 6-2-97	DESIGN BY R. CHANG	CHECKED A. Loof/J. Quincy	PREPARED FOR THE STATE OF CALIFORNIA DEPARTMENT OF TRANSPORTATION	G. Orsolini, PROJECT ENGINEER; T. Spoth, BRIDGE DESIGN MANAGER	BRIDGE NO. 28-0352L; KILOMETER POST 0.01	CARQUINEZ BRIDGE & OVERHEAD SOUTH ANCHORAGE SECTIONS	
	DETAILS BY R. PENG	CHECKED A. Loof/J. Quincy					
	QUANTITIES BY R. CHANG	CHECKED A. Loof		CU 04 EA 013011	DISREGARD PRINTS BEARING EARLIER REVISION DATES	REVISION DATES (PRELIMINARY STAGE ONLY) 4/20/98 9/18/98 12/18/98 1/8/99 1/18/99 2/16/99	SHEET 95 OF 348

ORIGINAL SCALE IN MILLIMETERS FOR REDUCED PLANS 0 10 20 30 40 50 60 70 80 90 100

FILE => ett004_20100411

PEN TABLE=> PEN

USERNAME => trphlts DATE PLOTTED => 20-Jul-1999 TIME PLOTTED => 10:08