8 Seismic Analysis of Bridge Structures

Introduction

The purpose of this course is to give engineers the tools necessary to obtain earthquake forces on bridges. A simple method is presented that models a bridge as a single degree of freedom system. As the bridge model becomes more complicated, this simple procedure becomes less accurate. Then, a multimodal dynamic analysis or time history computer analysis is recommended.

There are two basic concepts that are presented in this course. The first is that there is a relationship between a bridge's mass and stiffness and the forces and displacements that effect the structure during an earthquake. Therefore, if we can calculate the mass and the stiffness for our structure we can obtain the earthquake forces acting on it. The second concept is that Caltran's bridges are designed to behave nonlinearly for large earthquakes. Therefore, the engineer is required to make successive estimates of an equivalent linearized stiffness to obtain the seismic forces and displacements of the bridge.

The units of measurement for this course are in SI. Sufficient information is provided in this section to do the assignment. However, structural dynamics is a complicated subject and engineers are encouraged to read books and take courses to improve their understanding.

Basics

Mass is a measure of a body's resistance to acceleration. It requires a force of one Newton to accelerate one kilogram at a rate of one meter per second squared. In this course, we will calculate the weight in Newtons and divide by g, the acceleration due to gravity (9.81 m/sec^2) to obtain a bridge's mass in kilograms.

Stiffness is a measure of a structure's resistance to displacement. In this course, we define it as the force (in Newtons) required to move a structure one meter. The boundary conditions for the bridge need to be carefully studied to determine the stiffness of the structure. We typically consider the stiffness of columns and abutments in our analysis. If the stiffness of column footings or the bridge superstructure has a large effect on a bridge's seismic behavior, the bridge shouldn't be analyzed using the simple procedure given in this course. If the results of an analysis suggest that a column may rock on its footing, simple seismic rocking analyses can be performed.

Period is the time, in seconds it takes to complete one cycle of movement. A cycle is the trip from the point of zero displacement to the completion of the structures furthest left and right excursions and back to the point of zero displacement.

Natural Period is the time a single degree of freedom system will vibrate at in the absence of damping or other forces. Natural period (T) has the following relationship to the system's mass (m) and stiffness (k).

$$T = 2\pi\sqrt{\frac{m}{k}} \quad (1)$$

This is the most fundamental relationship in structural dynamics. We will use it to obtain the earthquake force and displacement on bridge structures.

Frequency is the inverse of period and can be measured as the number of cycles per second (f) or the number of radians per second (ω) where one cycle equals 2π radians.

Damping (viscous damping) is a measure of a structure's resistance to velocity. Bridges are underdamped structures. This means that the displacement of successive cycles becomes smaller. The damping coefficient (c) is the force required to move a structure at a speed of one meter per second. Critical damping (c_c) is the amount of damping that would cause a structure to stop moving after half a cycle. Bridge engineers describe damping using the damping ratio (ξ) where

$$\xi = \frac{c}{c_c} \quad (2)$$

A damping ratio of 5% is used for most bridge structures.

The Force Equation

The force equation for structural dynamics can be derived from Newton's second law:

$$\Sigma F = ma \quad (3)$$

Thus, all the forces acting on a body are equal to its mass times its acceleration.

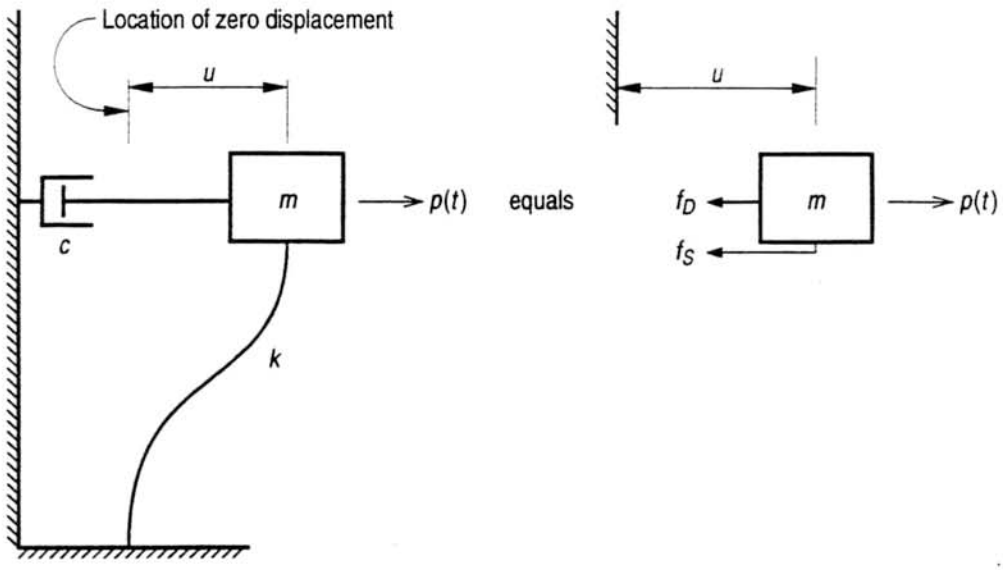

When a structure is acted on by a force, Newton's second law becomes:

$$p - f_s - f_D = mu'' \quad (4)$$

Where:

$f_s = ku$ the force due to the stiffness of the structure (5)

$f_D = cu'$ the force due to damping of the structure (6)

and

p is the external force acting on the structure. (7)

The variables u' and u'' and are the first and second derivatives of the displacement u, k is the force required for a unit displacement of the structure, and c is a measure of the damping in the system.

Thus, equation (4) can be rearranged as shown in equation (8).

$$mu'' + cu' + ku = p(t) \quad (8)$$

However, for earthquakes, the force is not applied at the mass but at the ground,

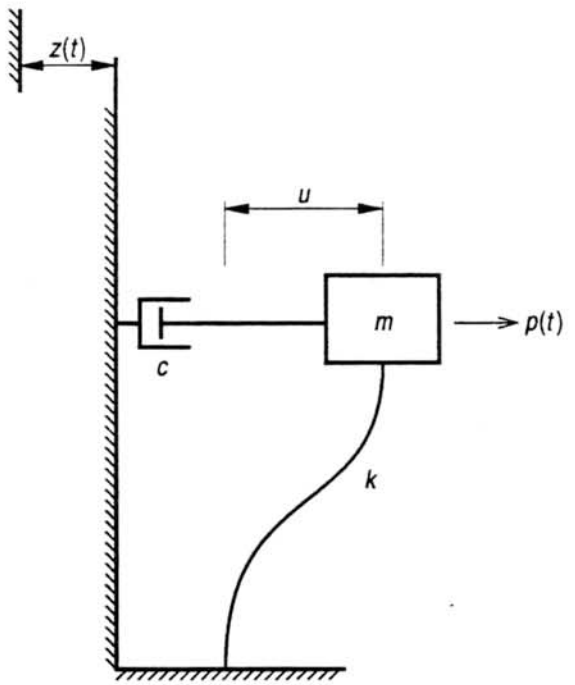

therefore, equation (8) becomes:

$$mu'' + c(u' - z') + k(u - z) = p \quad (9)$$

for the relative displacement $w = u - z$ (10)

and the equation of motion, when there is no external force p being applied, is:

$$mw'' + cw' + kw = -mz'' \quad (11)$$

In equation (11), the mass m, the damping factor c, and the stiffness k, are all known. The support acceleration z'' can be obtained from accelerogram records of previous earthquakes. Equation (11) is a second order differential equation that can be solved to obtain the relative displacement w, the relative velocity w', and the relative acceleration w'' for a bridge structure due to an earthquake.

Caltrans' Response Spectra

Response spectra have been developed so that engineers don't have to solve a differential equation repeatedly to capture the maximum force or displacement of their structure for a given acceleration record.

A response spectra is a graph of the maximum response (displacement, velocity or acceleration) of different single degree of freedom systems for a given earthquake record.

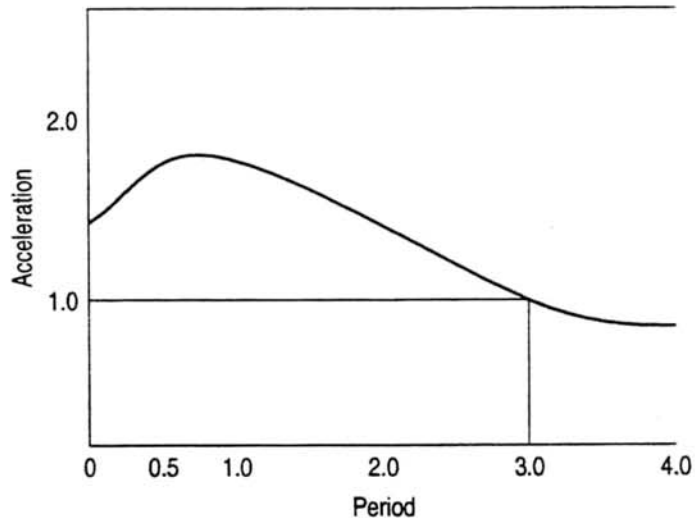

Example Response Spectra

The horizontal axis is the system's period and the vertical axis is the system's maximum response. A vertical line is drawn from the period to the spectra and a connecting horizontal line is drawn to obtain the response.

Thus, engineers can calculate the structure's period from its mass and stiffness, and use the appropriate 5% damped spectra to obtain the structure's response from the earthquake. If a bridge has a higher damping ratio, response spectra at higher damping can be calculated.

The Force Equation showed three responses that can be obtained from a dynamic analysis; displacement, velocity, and acceleration. We can also obtain them using response spectra. The spectral displacement (Sd) and velocity (Sv) can be obtained from the spectral acceleration using the following relationship.

$$Sa = \omega Sv = \omega^2 Sd \quad (12)$$

Therefore

$$Sd = \frac{Sa}{\omega^2} = \frac{Sa}{\left(\frac{2\pi}{T}\right)^2} = \frac{T^2 Sa}{4\pi^2} \quad \text{(13)}$$

Caltrans developed response spectra using five large California earthquake ground motions on rock. Twenty-eight different spectra were created based on four soil depths and seven peak ground accelerations (PGA). Therefore, engineers can obtain the earthquake forces on a bridge by picking the appropriate response spectra based on PGA and soil depth at the bridge site and calculating the natural period of their structure. These response spectra can be found in Caltrans' *Bridge Design Specifications* and in the Appendix at the back of this section. However, Caltrans is moving towards using site specific response spectra for many bridge sites.

Nonlinear Behavior

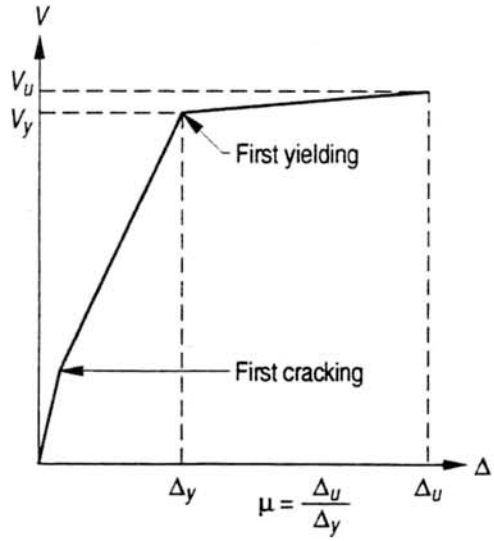

Nonlinear Column Stiffness

Bridge members change stiffness during earthquakes. A column's stiffness is reduced when the concrete cracks in tension. It is further reduced as the steel begins to yield and plastic hinges form. The axial stiffness of a bridge changes in tension and compression as expansion joints open and close. The soil behind the abutment yields for large compressive forces and may not support tension. We must consider all changes of stiffness to accurately obtain force and displacement values for our bridge.

Currently, our policy is to calculate a cracked stiffness for bridge columns. A value of $Icr = 0.5(I_{gross})$ can be used unless a moment-curvature analysis is warranted. Also, since bridge columns are designed to yield during large earthquakes, we take the column force obtained from our analysis, reduce it by a ductility factor, and design the columns for this smaller force. Caltrans is currently using a ductility factor (μ) of about 5 for designing new columns. However, a moment-curvature analysis of columns should be done when the column's ductility is uncertain.

Since we do not know how large a gap will exist at an abutment or hinge during an earthquake, the engineer should determine the largest and smallest gap and perform two analyses and use the largest force and displacement. The example problem will illustrate this procedure. An advantage of doing a hand analysis is that it allows us to consider many nonlinearities that are difficult to model when doing a multimodal dynamic analysis.

Abutment Stiffness

Longitudinally, the soil behind the backwall is assumed to have a stiffness, which is related to the area of the backwall as shown below:

$$k_L = (47\ 000)(W)(h) \quad \text{(kN/m)} \qquad (14)$$

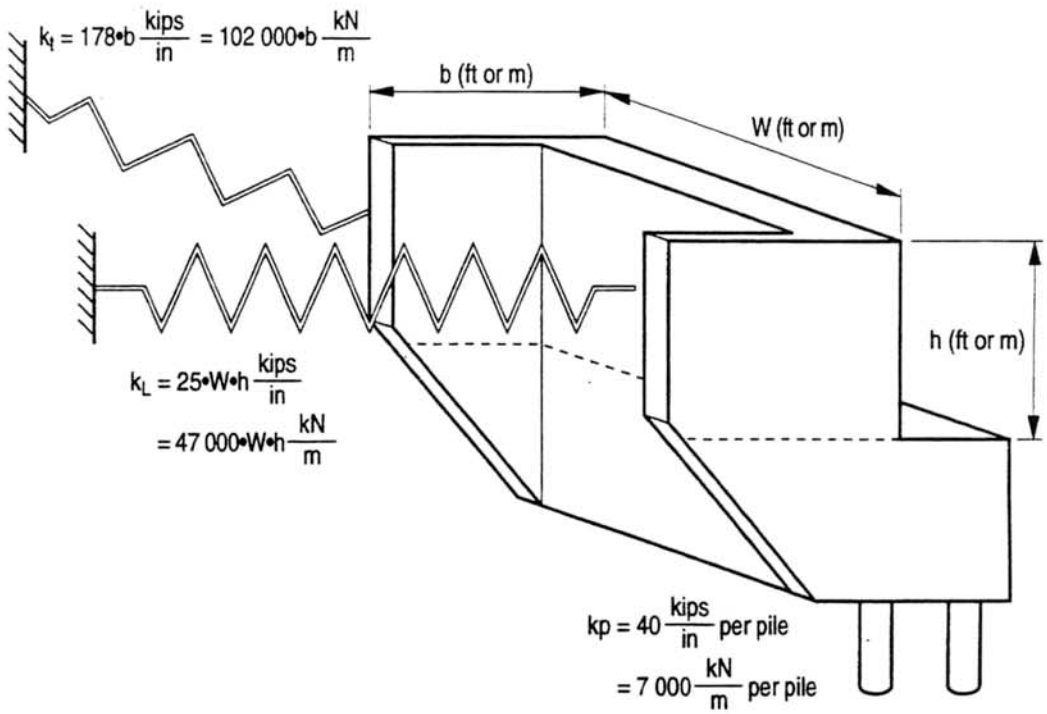

Abutment Stiffness

Transversely, the stiffness is considered ⅔ effective per length of inside wingwall (assuming the wingwall is designed to take the load) and the outside wingwall is only ⅓ effective per wingwall length for a resultant stiffness shown in equation 15.

$$K_T = (102\ 000)(b) \quad \text{(kN/m)} \qquad \text{(kN/m)} \quad (15)$$

An additional stiffness of 7 000 kN/m for each pile is added in both directions.

Therefore, in the longitudinal direction,

$$K_L = (47\ 000)Wh + (7\ 000)n \quad \text{(kN/m)} \qquad (16)$$

In the transverse direction,

$$K_T = (102\ 000)b + (7\ 000)n \quad \text{(kN/m)} \qquad (17)$$

More information on abutment stiffness can be obtain in *Bridge Design Aids*.

The abutment stiffness is highly nonlinear. Bridge abutments are only effective in compression. A gap may need to be closed on seat type abutments before the soil stiffness is initiated. The abutment stiffness remains linear until it reaches the ultimate strength of 370 kN/m^2. This value was confirmed by testing at the University of California at Davis. after reaching its ultimate strength, the abutment is assumed to have a perfectly plastic behavior. After about a meter of movement it has a negative stiffness. To capture this behavior in a linear analysis is, of course, impossible. However, the engineer can calculate the displacement and adjust the secant stiffness until the change in stiffness is less than 5%. This will be shown in the example problem.

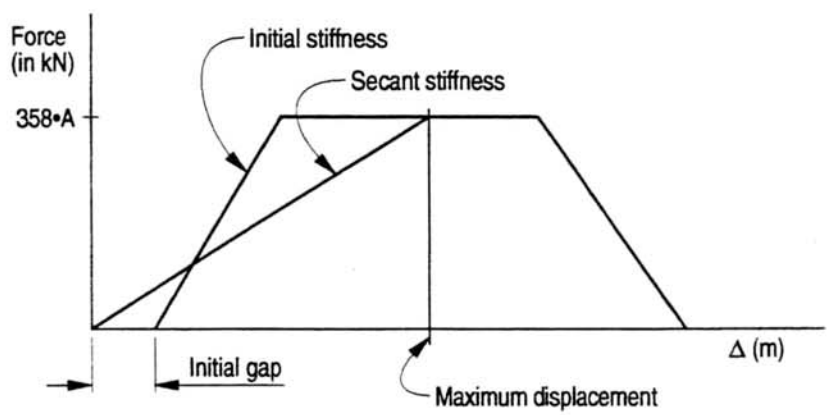

Nonlinear Abutment Behavior

Parallel and Series Systems

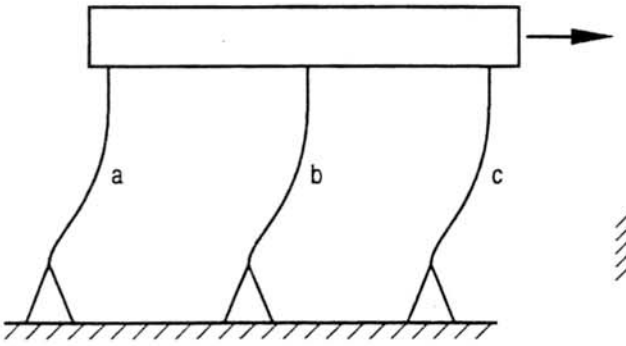

$$K_{total} = K_a + K_b + K_c$$

Parallel System

$$\frac{1}{K_{total}} = \frac{1}{K_a} + \frac{1}{K_b} + \frac{1}{K_c}$$

Series System

A simplification that allows engineers to analyze by hand many complicated and statically indeterminant structures is the concept of parallel and series structural systems. For a parallel system, all the elements share the same displacement, while for a series system, they share the same force. Also, their stiffnesses are summed differently. By assuming a rigid superstructure or by making other simplifying assumptions, bridge structures can be analyzed as combinations of parallel and series systems. This concept is particularly useful when evaluating the *longitudinal displacement* of the superstructure.

Code Requirements

Earthquakes are only considered for the Group VII loading. There are two cases. Case No. 1 is for 100% of the transverse force and 30% of the longitudinal force. Case No. 2 is for 100% of the longitudinal force and 30% of the transverse force. This is to take care of uncertainty as to the earthquake direction and to account for curved and skewed bridges with members that take a vector component of both the longitudinal and transverse force.

Example Problem

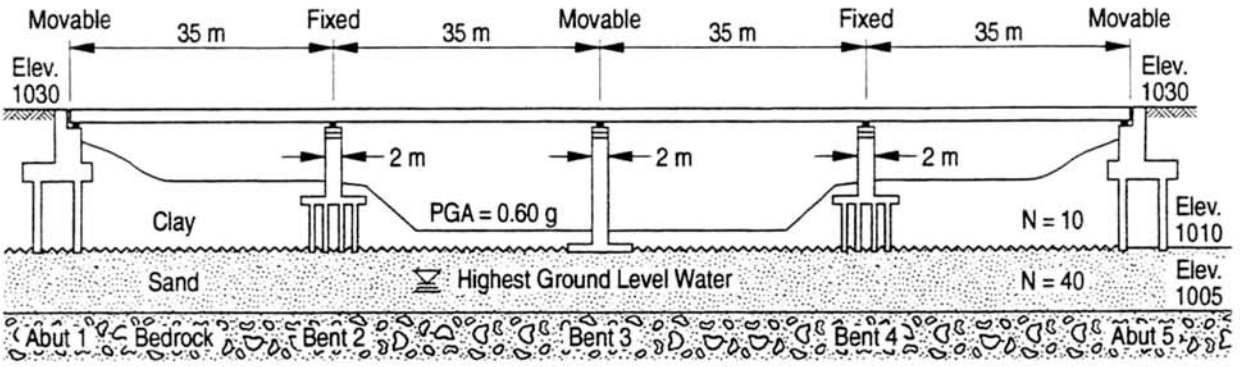

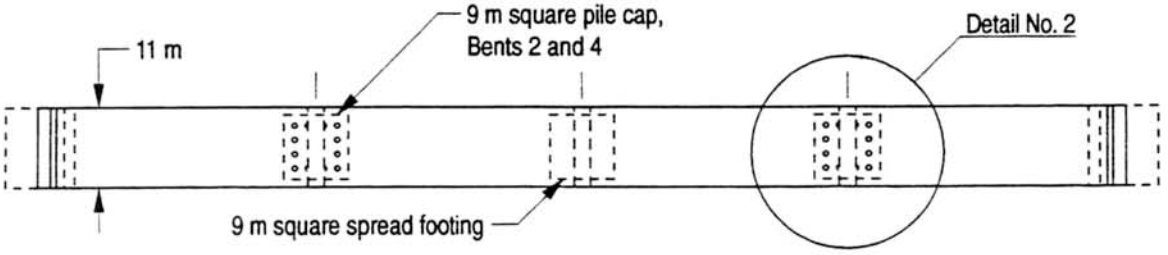

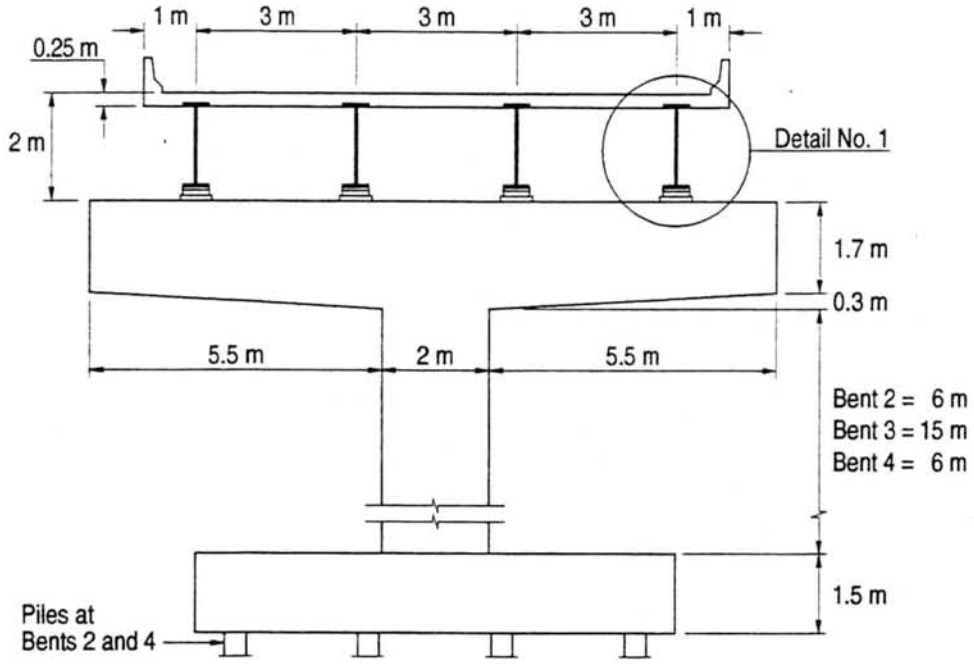

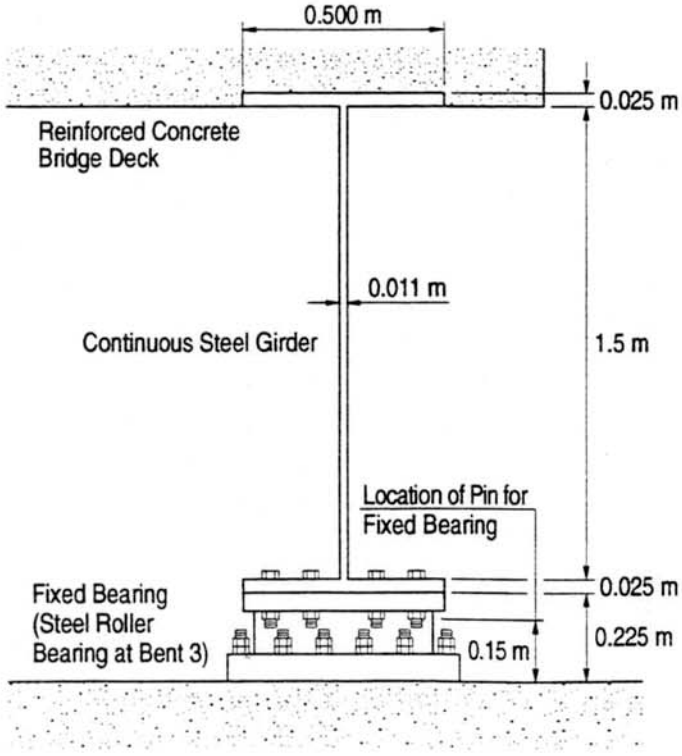

Detail No. 1

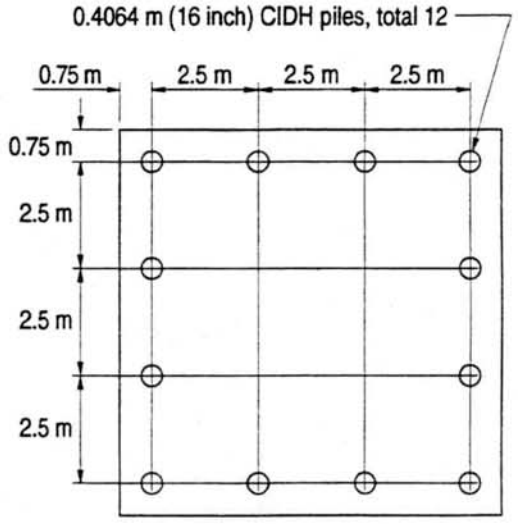

9 m by 9 m by 1.5 m footing. (Bent 2 and 4 with piles, Bent 3 without piles.)

Detail No. 2

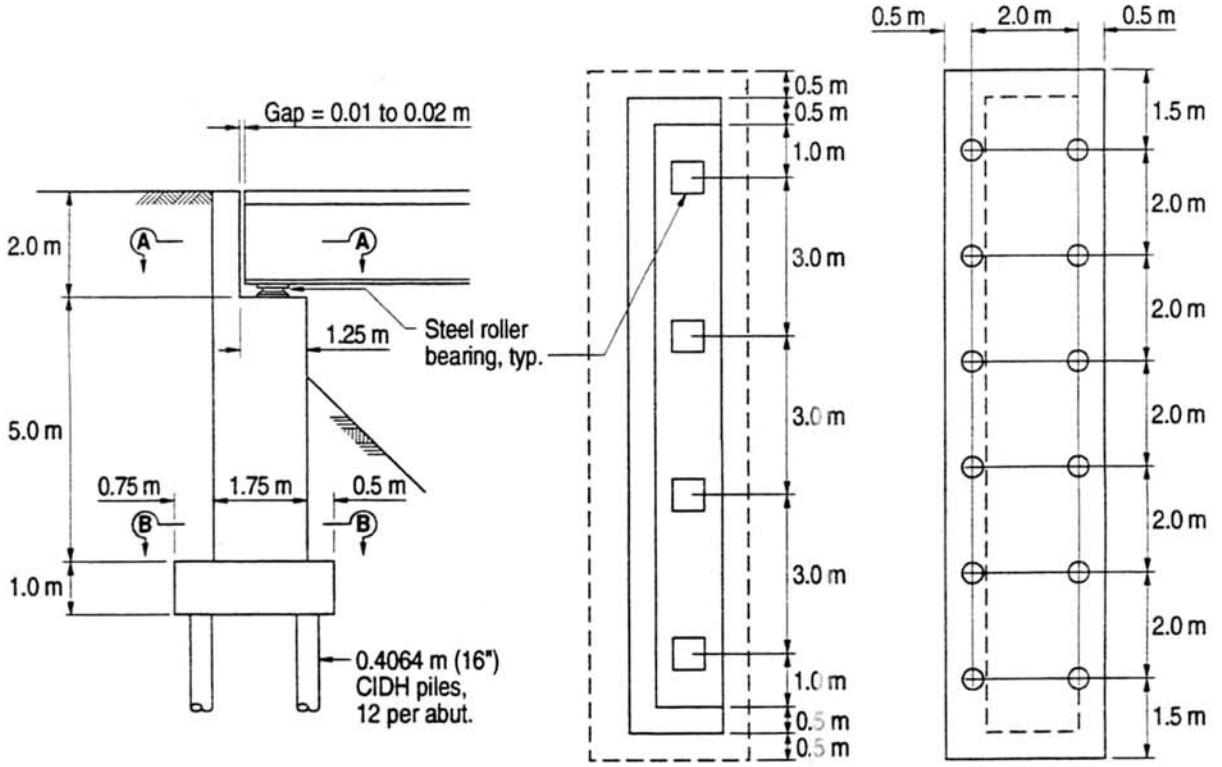

Section A-A **Section B-B**

A) Calculating Longitudinal Seismic Forces

We will assume the bent footings are fixed and ignore the stiffness of the bent caps to simplify the analysis. Bent #3 will not be considered in the analysis since it has a roller bearing and contributes a negligible resistance to the earthquake force. However, engineers need to make a field inspection of existing bridges to make sure bearings are capable of rolling. For a seismic analysis we will use the cracked moment of inertia of the columns.

$$K_c = 2 \text{ Columns}\left(\frac{3EI_{cr}}{l^3}\right) = \frac{2(3)(2.5\times10^7)(0.5)\left(\frac{2\times2^3}{12}\right)}{8^3} = 1.95\times10^5 \text{ kN/m}$$

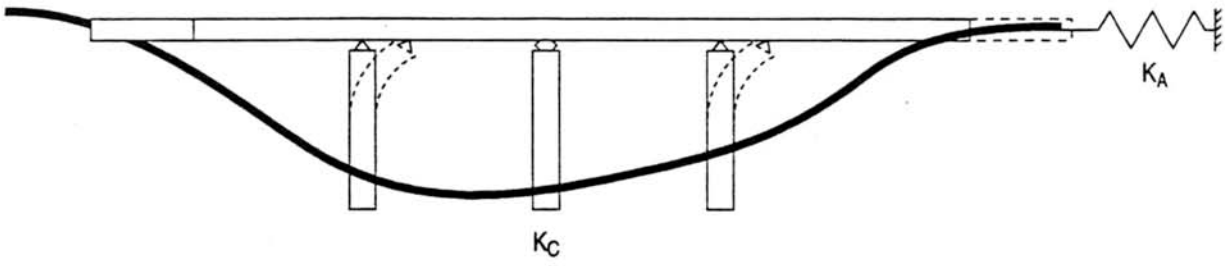

The only other stiffness we need to consider is at the abutment. Since only one abutment can act at a time (the one the superstructure is pressing against), and because both abutments are identical, we will only consider one abutment in our analysis. Equation (14) gives the following stiffness;

$$K_A = (47\ 000)2(11) + (7\ 000)12 = 1.03 \times 10^6 + 8.4 \times 10^4 = 1.114 \times 10^6 \text{ kN/m}$$

Longitudinally, the bridge behaves as a parallel system, therefore the total stiffness is

$$K_{tot} = K_C + K_A = 1.95 \times 105 + 1.11 \times 10^6 = 1.31 \times 10^6 \text{ kN/m}$$

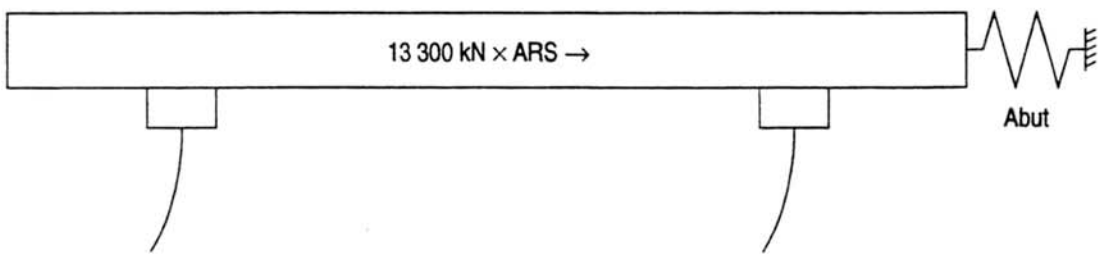

W, the structures dead load is equal to the dead weight of the superstructure plus the dead weight of the bent caps for bents #2 and #4.

The total weight for our structure is 13 300 kN.

From the chapter on abutments, we know that the abutment will yield at a force equal to 370 kN/m^2 times the area of the backwall. Therefore;

$$F_y = 370 \times A = 370 \times 2 \times 11 = 8\ 140 \text{ kN}$$

Our next step is make a plot of force versus displacement for the bridge. This will help us iterate to obtain the longitudinal seismic force on the bridge. From the bridge plans we know that the minimum abutment gap is 0.01 meters and the maximum gap is 0.02 meters. We must examine both gap openings to determine the maximum force.

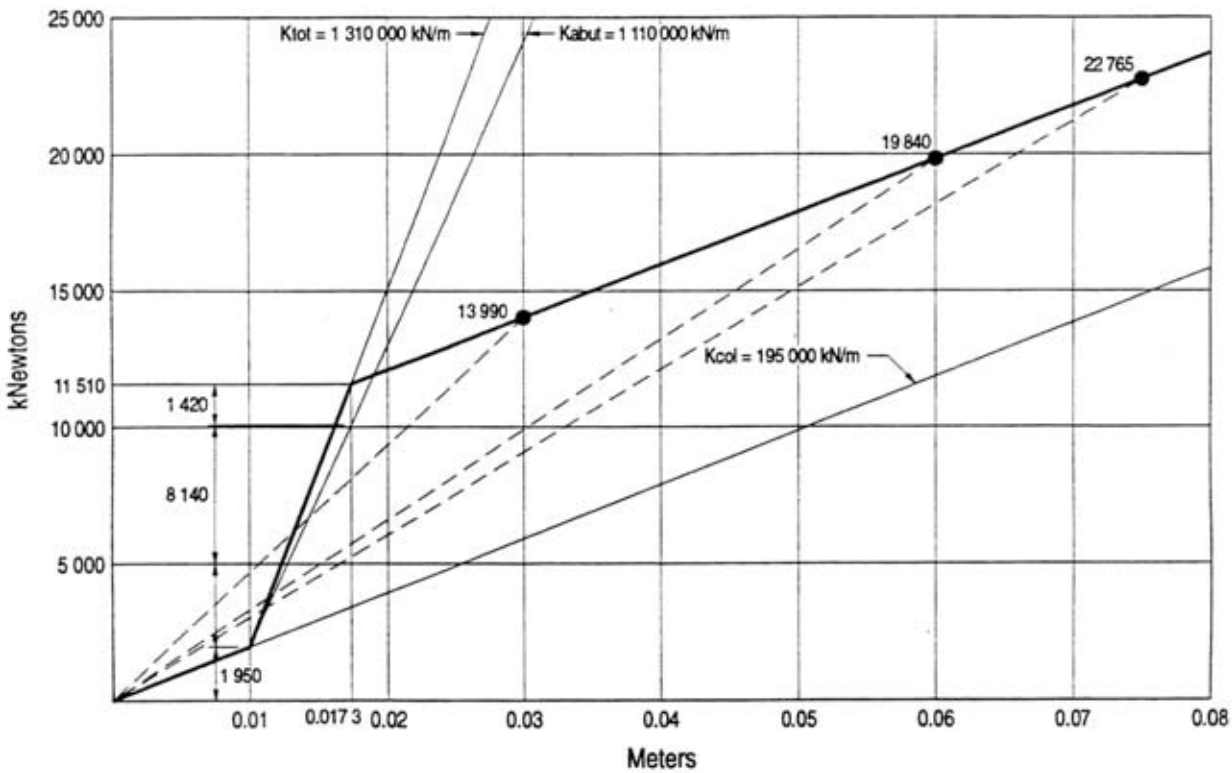

The figure above gives a good visual representation of the nonlinear behavior of our bridge. There is a 0.01 meter gap where only the cracked column stiffness is acting. After the gap closes the abutment is engaged and the total stiffness is acting. The abutment yields at a force of 8 140 kN. An additional 1 420 kN goes to the columns as the bridge displaces to the point where the abutment yields. Then, the bridge's remaining stiffness is the cracked column stiffness.

The procedure is to guess the maximum seismic displacement, calculate a linearized stiffness, and obtain the actual displacement based on that stiffness. The procedure is repeated until the guessed displacement and calculated displacement are within 5%.

Trial 1. Assume a 0.03 meter total displacement.

Total force = $\sum K\Delta$ = (195 000)(0.01) + (1 310 000)(0.0073) + (195 000)(0.0127) = 13 990 kN

Linearized Stiffness $K = F/\Delta$ = 13 990/0.03 = 466 320 kN/m

$$\text{Period } T = 2\pi\sqrt{\frac{M}{K}} = 2\pi\sqrt{\frac{W/g}{K}} = 2\pi\sqrt{\frac{13\,300/9.81}{466\,320}} = 0.34 \text{ second}$$

The Appendix has the twenty-eight response spectra most commonly used by Caltrans. A thorough examination of the bridge tells us that the footings vary from 5 to 17 meters above bedrock. Therefore we should use the B Response Spectra for a 0.6 *g* peak ground acceleration. For a longitudinal period of 0.34 seconds, we get an ARS of 1.78.

Now we calculate the actual displacement for our linearized stiffness as:

$$\Delta = \frac{ARS \times W}{K} = \frac{1.78 \times 13\,330}{466\,320} = 0.051 \text{ meters}$$

We guessed a 0.03 meters displacement but the actual displacement was larger.

Therefore, we must make a second trial with a larger displacement.

Trial 2. Assume a 0.06 meter total displacement.

Total force = $\sum K\Delta$ = (195 000)(0.01) + (1 310 000)(0.0073) + (195 000)(0.0427) = 19 840 kN

Linearized Stiffness $K = F/\Delta$ = 19 840/0.06 = 330 670 kN/m

$$\text{Period } T = 2\pi\sqrt{\frac{M}{K}} = 2\pi\sqrt{\frac{W/g}{K}} = 2\pi\sqrt{\frac{13\,300/9.81}{330\,670}} = 0.40 \text{ second}$$

Therefore the ARS is 1.74.

$$\Delta = \frac{ARS \times W}{K} = \frac{1.74 \times 13\,330}{330\,670} = 0.07 \text{ meters}$$

Trial 3. Assume a 0.075 meter total displacement.

Force $(F) = \sum K\Delta = (195\,000)(0.01) + (1\,310\,000)(0.0073) + (195\,000)(0.0577) = 22\,765$ kN

Linearized Stiffness $K = F/\Delta = 22\,765/0.075 = 303\,530$ kN/m

$$\text{Period } T = 2\pi\sqrt{\frac{M}{K}} = 2\pi\sqrt{\frac{W/g}{K}} = 2\pi\sqrt{\frac{13\,300/9.81}{303\,530}} = 0.42 \text{ second}$$

Therefore the ARS is 1.72.

$$\Delta = \frac{ARS \times W}{K} = \frac{1.72 \times 13\,330}{303\,530} = 0.075 \text{ meters}$$

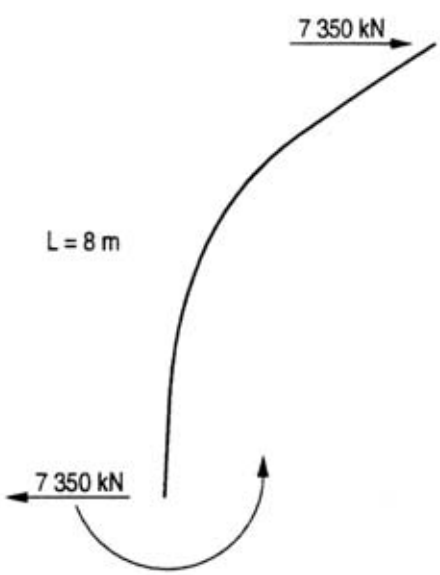

M = VL = (8 m)(7 350 kN) = 58 800 kN – m

Good. We obtained the maximum displacement on the third try. Now we can calculate the seismic force to the bridge columns. Bents 2 and 4 have a cracked stiffness of

$K_c = (3EI_{cr}/l^3) = 3(2.5 \times 10^7)(0.5)(2 \times 2^3/12)/8^3 = 9.8 \times 10^4$ kN/m

$V = (98\,000 \text{ kN})(0.075 \text{ m}) = 7\,350$ kN.

$M = VL = 8(7\,350) = 58\,800$ kN–m

For designing the columns, we would reduce this moment by a ductility factor. For new bridges, we'll use a ductility factor of 5.0.

We would then redo our analysis with the maximum gap of 0.02 meters and use whichever analysis gave the largest column force.

The shear force at Bent 3 is limited to the friction of the roller bearing. Since that is not a seismic calculation it will not be considered in this chapter.

B) Calculating Transverse Seismic Forces

Calculating the longitudinal behavior of bridges is relatively straightforward. This is because the parallel system analogy works well in the longitudinal direction. In the transverse direction, there is no simple way to model the whole bridge's behavior. This has led engineers to analyze the transverse motion of each bent separately. This simplification is most accurate for a long bridge where each bent is more able to act independent of the rest of the bridge. For shorter bridges this method is considered less accurate but conservative. For bridges with complicated geometries like skews, curves, varying span and column lengths, etc., this method should not be used. There are hand methods capable of analyzing the transverse seismic behavior of whole bridges (the Single Mode Spectra Method is recommended by AASHTO) but they require the engineer to calculate the displacement of a statically indeterminate structure by hand. Therefore, Caltrans policy is to recommend doing a multimodal dynamic analysis of bridges with a computer (using GTSTRUDL) except for those cases when a quick, simple, conservative way of obtaining transverse seismic forces is required. This could be for bridges composed of simple spans, long bridges or when an engineer needs a reality check for a computer solution.

Since the transverse hand solution will treat each column separately, the only non-linearity that will be considered is the cracked stiffness of the concrete bridge columns.

Although we did not consider Bent #3 for longitudinal motion, it must be considered for transverse motion. This is because the roller at the top of Bent #3(and at the abutments) engages the superstructure transversely. The engineer needs to investigate the actual device since different bearings transfer different amounts of load in either direction.

Our first step will be to divide the superstructure into tributary areas and lump the mass to the appropriate bent. Since the abutment's have bearings that engage the superstructure, they also will get a tributary area of the superstructure.

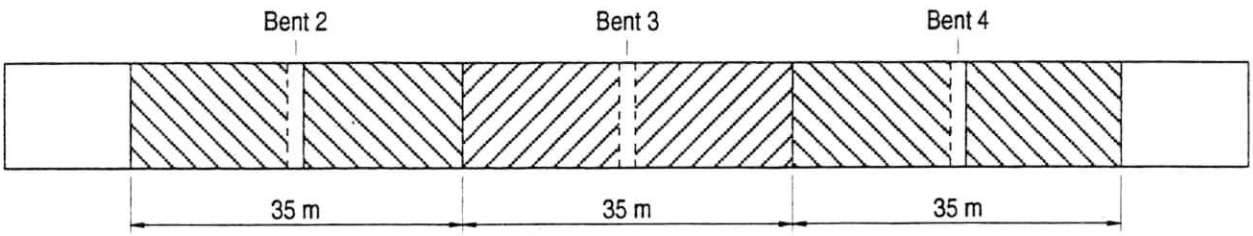

Superstructure Dead Load = (12.8 + 68.4)35 = 2 850 kN

Bent Cap Dead Load = 970 kN

Total Dead Load (per bent) = 3 820 kN

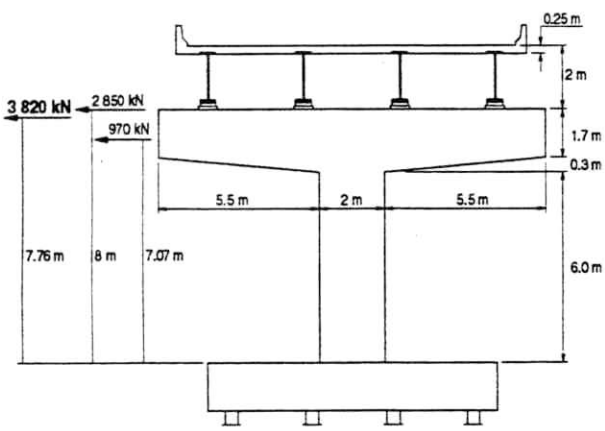

Bent 2 and 4

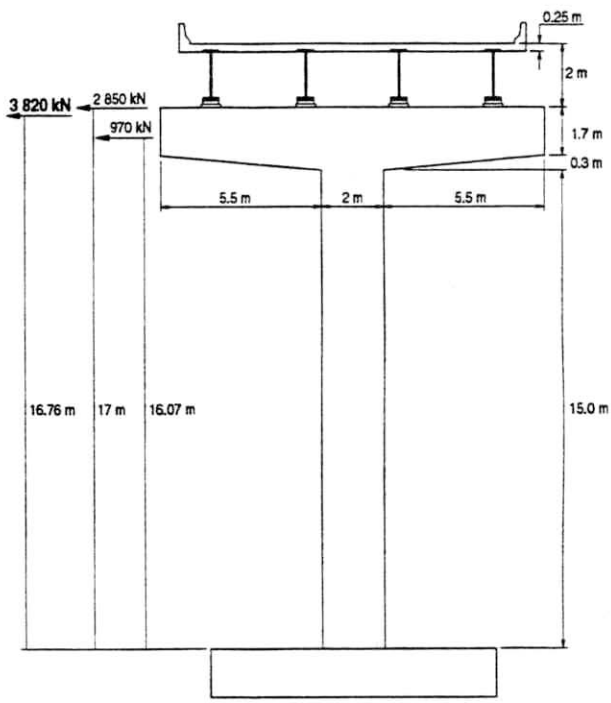

Bent 3

Bent 2 and 4 Seismic Force

$$K = \frac{3EI}{L^3} = \frac{3(2.5\times10^7)(0.5)\left(\frac{(2)^4}{12}\right)}{7.76^3} = 107\,000 \text{ kN/m}$$

$$T = 2\pi\sqrt{\frac{W/g}{K}} = 2\pi\sqrt{\frac{3\,820/9.81}{107\,000}} = 0.38$$

ARS = 1.75

$V(ars)$ = 1.75(3 820) = 6 685 kN

M = 7.76(6 685) = 51 875 kN–m

Bent 3 Seismic Force

$$K = \frac{3EI}{L^3} = \frac{3(2.5\times10^7)(0.5)\left(\frac{(2)^4}{12}\right)}{16.76^3} = 10\,620 \text{ kN/m}$$

$$T = 2\pi\sqrt{\frac{W/g}{K}} = 2\pi\sqrt{\frac{3\,820/9.81}{10\,620}} = 1.20$$

$V(ars)$ = 0.80(3 820) = 3 056 kN

M = 16.76(3 056) = 51 220 kN–m

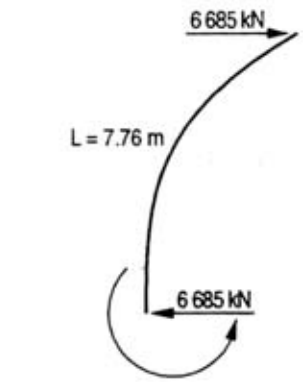

M = VL = 6 685(7.64) = 51 800 kN – m

Bent 2 and 4

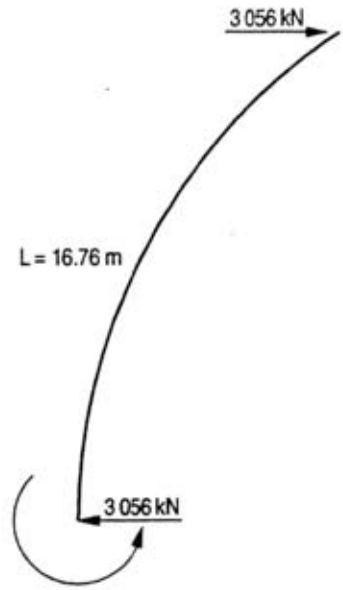

M = VL = 3 056(16.64) = 51 220 kN – m

Bent 3

Example Problem Results (Hand Solution)

	Shear (Elastic)	Moment (Elastic) (at bottom of column)	Moment (Reduced) (at bottom of column)
Bent 2 Longitudinal	7 350 kN	58 800 kN–m	11 760 kN–m
Bent 2 Transverse	6 685 kN	51 875 kN–m	10 375 kN–m
Bent 3 Longitudinal	0	0	0
Bent 3 Transverse	3 056 kN	51 220 kN–m	10 244 kN–m
Bent 4 Longitudinal	7 350 kN	58 800 kN–m	11 760 kN–m
Bent 4 Transverse	6 685 kN	51 070 kN–m	10 214 kN–m

Homework Problem

This two-span bridge is in a highly seismic area with a Peak Ground Acceleration of 0.7 g. Calculate the maximum seismic forces per column to be used in design.

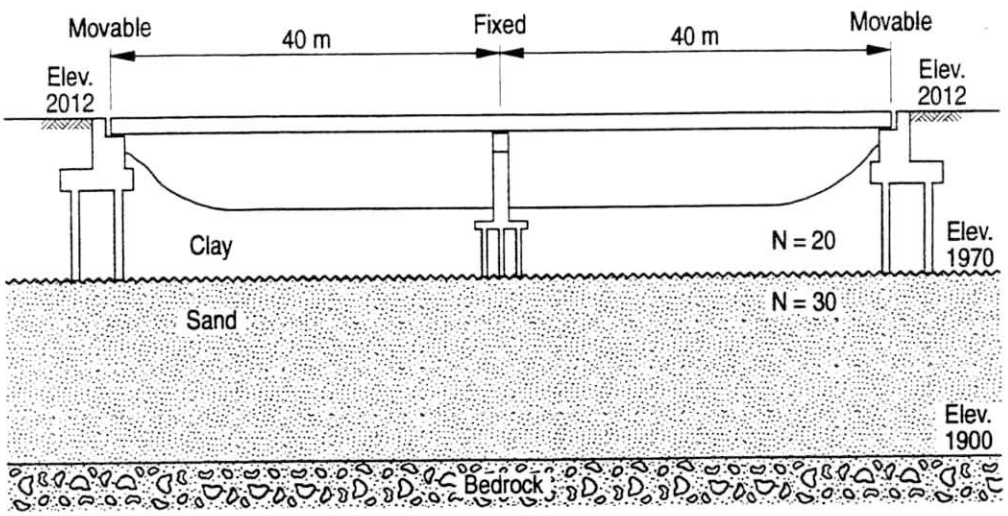

Elevation View

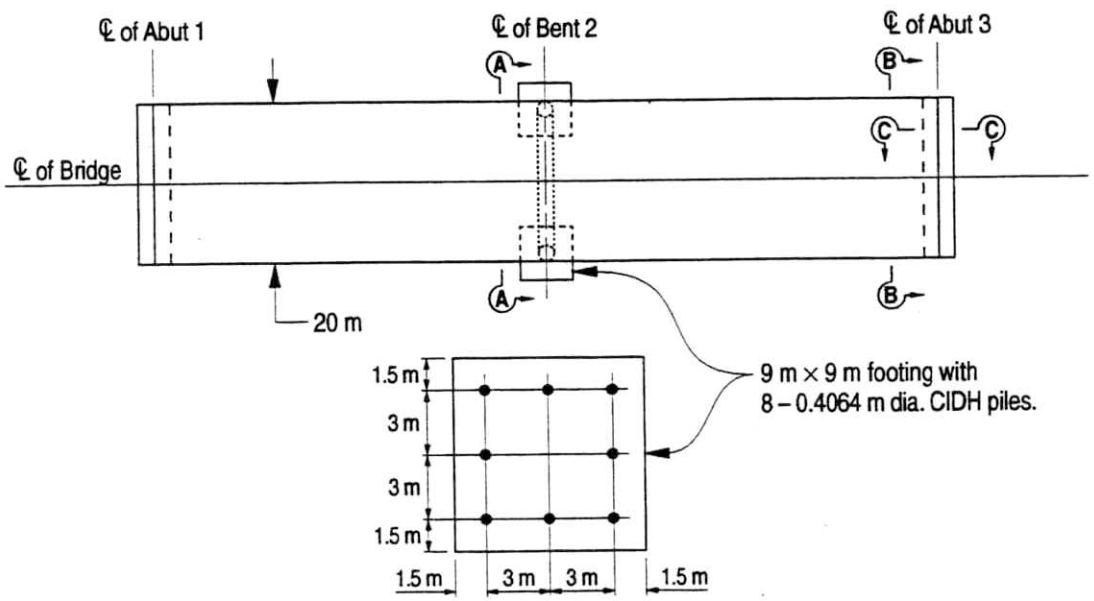

Plan View

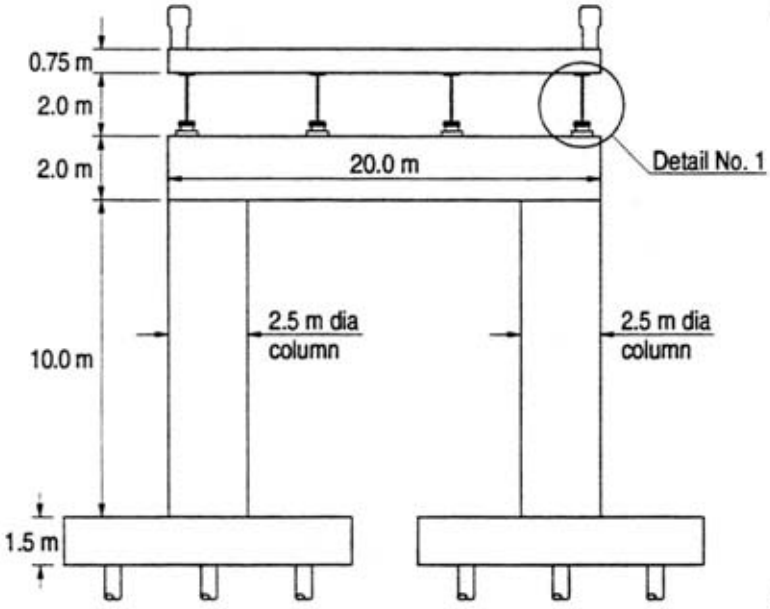

Section A-A

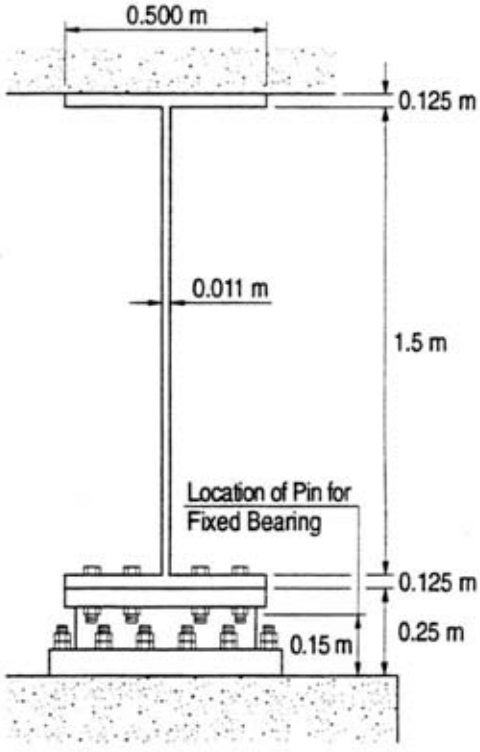

Detail No. 1

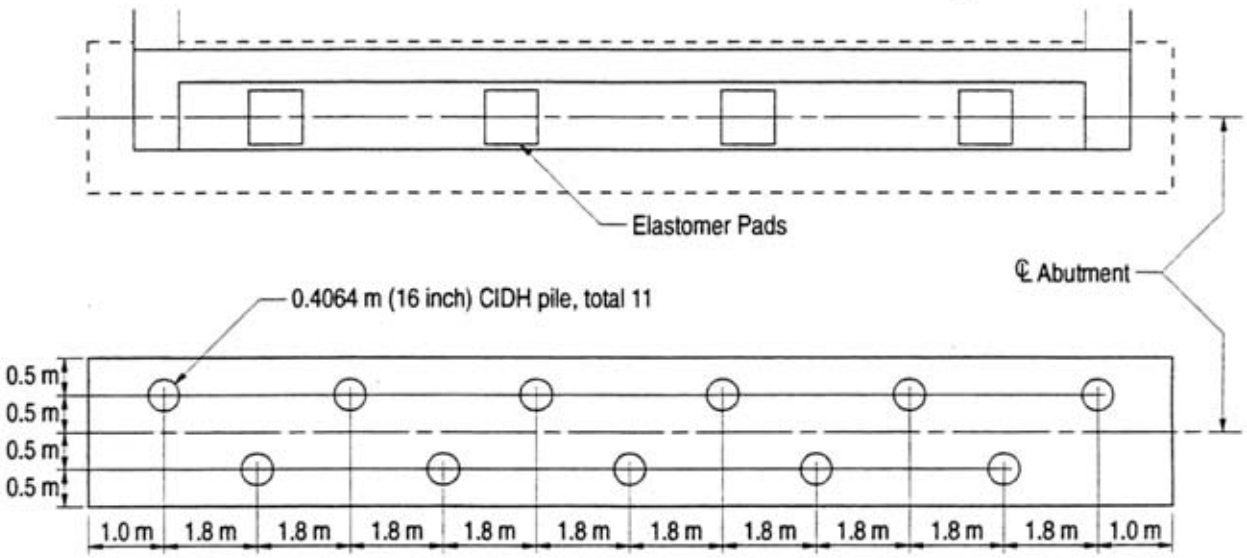

Section A-A

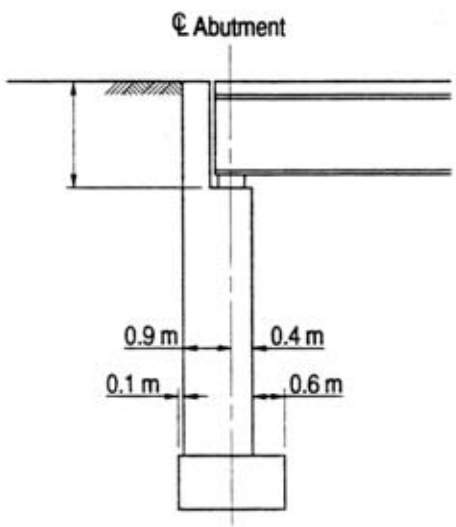

Section C-C

APPENDIX

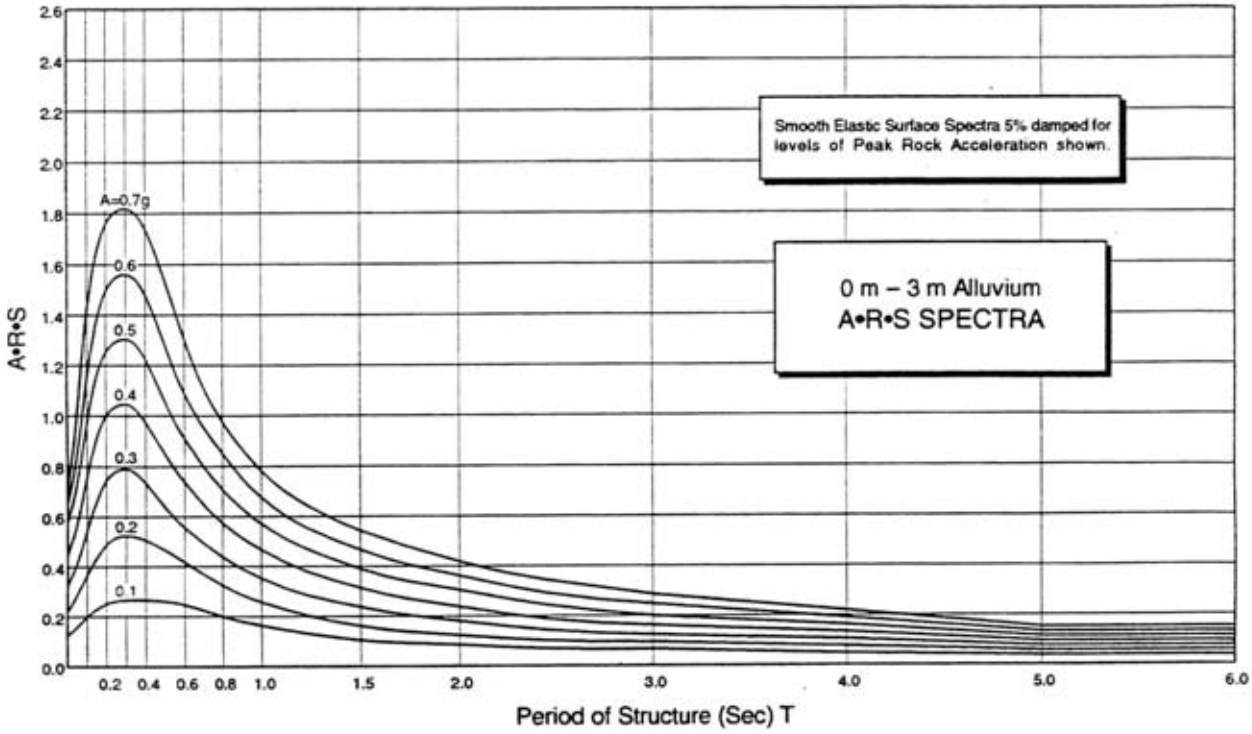
Smooth Elastic Surface Spectra 5% damped for levels of Peak Rock Acceleration shown.
0 m – 3 m Alluvium
A•R•S SPECTRA
A=0.7g
0.6
0.5
0.4
0.3
0.2
0.1
A•R•S
Period of Structure (Sec) T

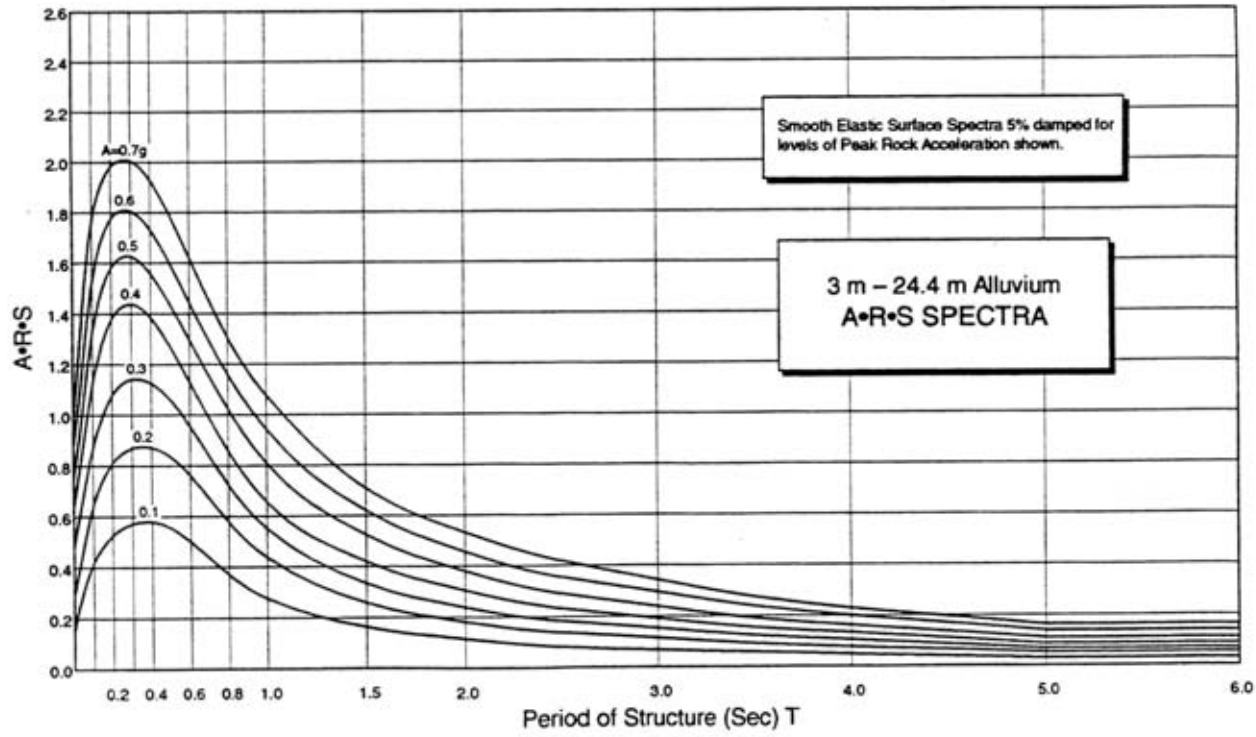
Smooth Elastic Surface Spectra 5% damped for levels of Peak Rock Acceleration shown.
3 m – 24.4 m Alluvium
A•R•S SPECTRA
A=0.7g
0.6
0.5
0.4
0.3
0.2
0.1
A•R•S
Period of Structure (Sec) T

APPENDIX

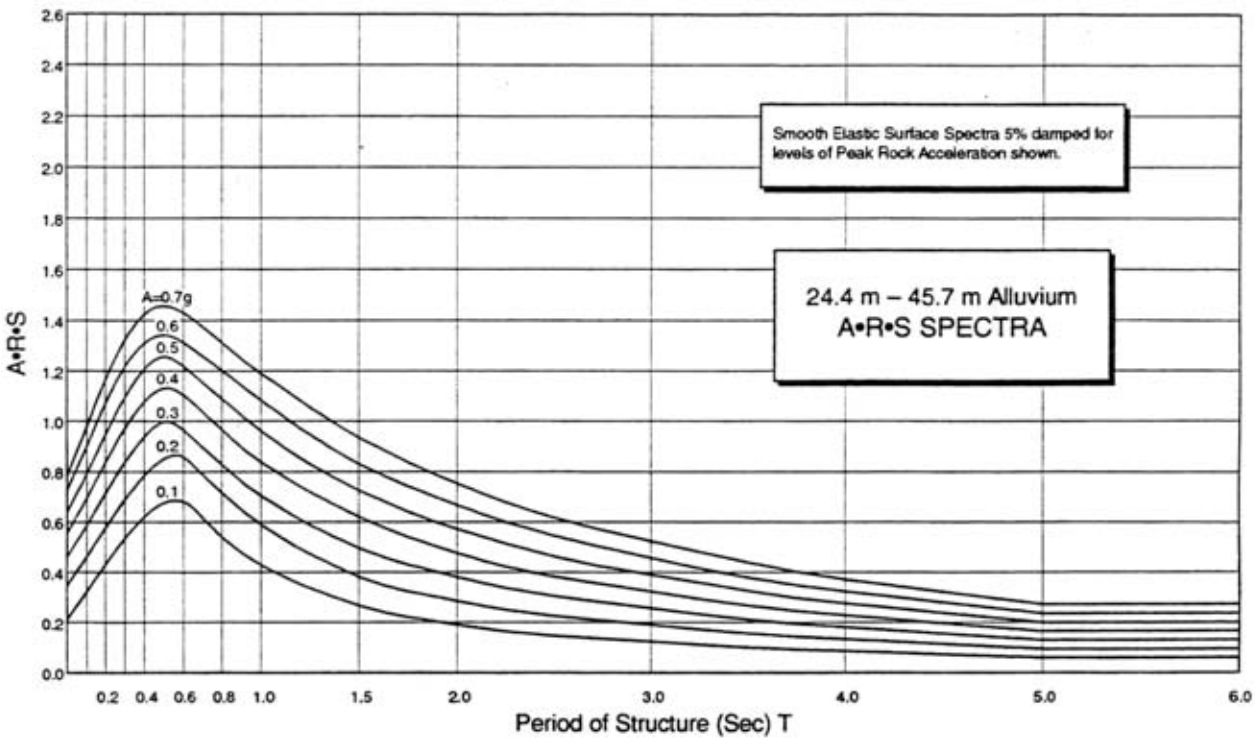
Smooth Elastic Surface Spectra 5% damped for levels of Peak Rock Acceleration shown.
24.4 m – 45.7 m Alluvium
A•R•S SPECTRA
A=0.7g
0.6
0.5
0.4
0.3
0.2
0.1
A•R•S
Period of Structure (Sec) T

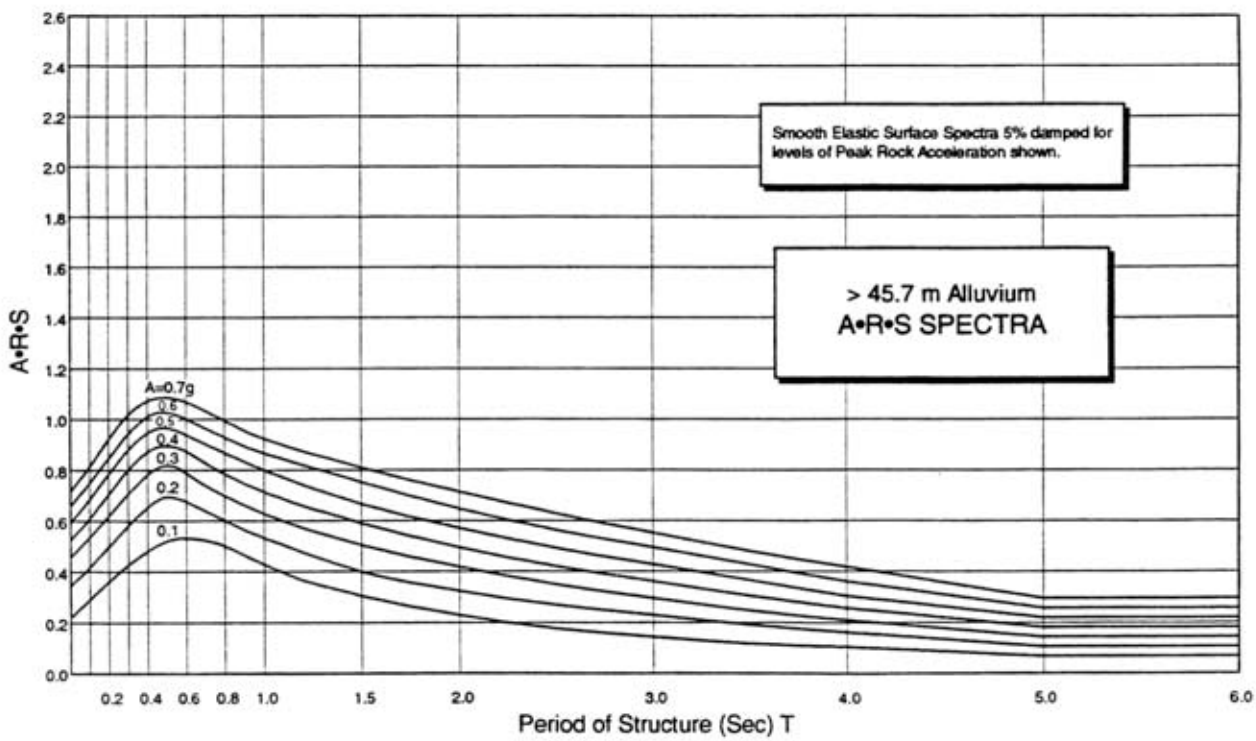
Smooth Elastic Surface Spectra 5% damped for levels of Peak Rock Acceleration shown.
> 45.7 m Alluvium
A•R•S SPECTRA
A=0.7g
0.6
0.5
0.4
0.3
0.2
0.1
A•R•S
Period of Structure (Sec) T