4 Design of Welded Steel Plate Girders

In accordance with the 1992 Fifteenth Edition AASHTO Specifications and Revisions by Caltrans Bridge Design Specifications

Contents

Notations and Abbreviations 4-1

4.0 Introduction 4-9

4.1 General Design Considerations 4-10

4.2 Design Loads 4-11

4.3 Design for Maximum Loads 4-11

4.3.1 Braced Sections 4-11

4.3.2 Unbraced Sections 4-13

4.3.3 Shear Capacity and Design 4-14

4.4 Composite Girders 4-16

4.5 Fatigue Design 4-18

4.5.1 Factors Affecting Fatigue Performance 4-18

4.5.2 Applied Stress Range 4-19

4.5.3 Allowable Stress Range 4-20

4.5.4 Type of Loading 4-20

4.5.5 Stress Category 4-20

4.5.6 Redundancy 4-20

4.6 Charpy V-Notch Impact Requirements 4-21

4.7 Fracture Control Plan (FCP) 4-22

4.8 Design Example Problem 4-23

Design Example Solution

4.9 Loading 4-25
4.9.1 Dead Load 4-25
4.9.2 Live Load 4-26

4.10 Composite Section Design 4-29
4.10.1 Design Loads 4-29
4.10.2 Fatigue Loads 4-30
4.10.3 Girder Section 4-31
4.10.4 Width to Thickness Ratios 4-37
4.10.5 Bracing Requirements 4-37
4.10.6 Fatigue Requirements 4-38
4.10.6.1 Applied and Allowable Stress Ranges 4-48
4.10.7 Shear Design 4-49
4.10.7.1 Moment and Shear Interaction 4-50
4.10.7.2 Transverse Stiffener Design 4-51

4.11 Non-Composite Section Design 4-52
4.11.1 Design Loads 4-52
4.11.2 Girder Section 4-53
4.11.3 Width to Thickness Ratios 4-55
4.11.4 Bracing Requirements 4-56
4.11.5 Fatigue Requirements 4-56
4.11.6 Shear Design 4-57
4.11.6.1 Moment and Shear Interaction 4-58
4.11.6.2 Transverse Stiffener Design 4-61

4.12 Flange-to-Web Weld 4-63
4.12.1 Weld Design 4-63
4.12.2 Fatigue Check 4-64

4.13 Shear Connectors 4-65
4.13.1 Fatigue Design 4-65
4.13.2 Ultimate Strength 4-68
4.13.3 Shear Connectors at Points of Contraflexure 4-69

4.14 Bearing Stiffener at Pier 2 4-70

4.15 Splice Plate Connection *TO BE ADDED AT A FUTURE DATE* 4-75

4.16 Bridge Design System Computer Output ..... 4-A to 4-I

4 Design of Welded Steel Plate Girders

Notations

References within parentheses are to *Bridge Design Specifications*, Section 10.

A = area of cross section (Articles 10.37.1.1, 10.34.4, 10.48.1.1, 10.48.2.1, 10.48.4.2, 10.48.5.3 and 10.55.1)

A = bending moment coefficient (Article 10.50.1.1.2)

A_F = amplification factor (Articles 10.37.1.1 and 10.55.1)

$(AF_y)_{bf}$ = product of area and yield point for bottom flange of steel section (Article 10.50.1.1.1)

$(AF_y)_c$ = product of area and yield point of that part of reinforcing which lies in the compression zone of the slab (Article 10.50.1.1.1)

$(AF_y)_{tf}$ = product of area and yield point for top flange of steel section (Article 10.50.1.1.1)

$(AF_y)_w$ = product of area and yield point for web of steel section (Article 10.50.1.1.1)

A_f = area of flange (Articles 10.39.4.4.2, 10.48.2.1, 10.53.1.2, and 10.56.3)

A_{fc} = area of compression flange (Article 10.48.4.1)

A_s^r = total area of longitudinal reinforcing steel at the interior support within the effective flange width (Article 10.38.5.1.2)

A_r^s = total area of longitudinal slab reinforcement steel for each beam over interior support (Article 10.38.5.1.3)

A_s = area of steel section (Articles 10.38.5.1.2, 10.54.1.1, and 10.54.2.1)

A_w = area of web of beam (Article 10.53.1.2)

a = distance from center of bolt under consideration to edge of plate in inches (Articles 10.32.3.3.2 and 10.56.2)

a = spacing of transverse stiffeners (Article 10.39.4.4.2)

a = depth of stress block (Figure 10.50A)

a = ratio of numerically smaller to the larger end moment (Article 10.54.2.2)

B = constant based on the number of stress cycles (Article 10.38.5.1.1)

B = constant for stiffeners (Articles 10.34.4.7 and 10.48.5.3)

b = compression flange width (Table 10.32.1A and Article 10.34.2.1.3)

b = distance from center of bolt under consideration to toe of fillet of connected part, in. (Articles 10.32.3.3.2 and 10.56.2)

b = effective width of slab (Article 10.50.1.1.1)

b = effective flange width (Articles 10.38.3 and 10.38.5.1.2)

b = widest flange width (Article 10.15.2.1)

b = distance from edge of plate or edge of perforation to the point of support (Article 10.35.2.3)

b = unsupported distance between points of support (Article 10.35.2.7)

b = flange width between webs (Articles 10.37.3.1, 10.39.4.2, 10.51.5.1, and 10.55 3)

b' = width of stiffeners (Articles 10.34.5.2, 10.34.6, 10.37.2.4, 10.39.4.5.1, and 10.55.2

b' = width of a projecting flange element, angle, or stiffener (Articles 10.34.2.2, 10.37.3.2, 10.39.4.5.1, 10.48.1, 10.48.2, 10.48.5.3, 10.50, 10.51.5.5, and 10.55.3)

C = web buckling coefficient (Articles 10.34.4, 10.48.5.3, 10.48.8. and 10.50(e))

C = compressive force in the slab (Article 10.50.1.1.1)

C = equivalent moment factor (Article 10.54.2.1)

C' = compressive force in top portion of steel section (Article 10.50.1.1.1)

C_b = bending coefficient (Table 10.32.1A, Article 10.48.4.1)

C_c = column slenderness ratio dividing elastic and inelastic buckling (Table 10.32.1A)

C_{mx} = coefficient about X-axis (Article 10.36)

C_{my} = coefficient about the Y-axis (Article 10.36)

c = buckling stress coefficient (Article 10.51.5.2)

D = clear distance between flanges, inches (Article 10.15.2)

D = clear unsupported distance between flange components (Articles 10.34.3, 10.34.4, 10.34.5, 10.37.2, 10.48.1, 10.48.2, 10.48.5, 10.48.6, 10.48.8, 10.49.2, 10.49.3.2, 10.50(d), 10.50.1.1.2, 10.50.2.1, and 10.55.2)

D_c = clear distance between the neutral axis and the compression flange (Articles 10.48.2.1(b), 10.48.4.1, 10.49.2, 10.49.3 and, 10.50(d))

D_c = moments caused by dead load acting on composite girder (Article 10.50.1.2.2)

D_{cp} = distance to the compression flange from the neutral axis for plastic bending, inches (Articles 10.50.1.1.2 and 10.50.2.1)

D_s = moments caused by dead load acting on steel girder (Article 10.50.1.2.2)

d = bolt diameter (Table 10.32.3B)

d = diameter of stud, inches (Article 10.38.5.1)

d = depth of beam or girder, inches (Article 10.13, Table 10.32.1A, Articles 10.48.2, 10.48.4.1, and 10.50.1.1.2)

d = diameter of rocker or roller, inches (Article 10.32.4.2)

d_b = beam depth (Article 10.56.3)

d_c = column depth (Article 10.56.3)

d_o = spacing of intermediate stiffener (Articles 10.34.4, 10.34.5, 10.48.5.3, 10.48.6.3, and 10.48.8)

E = modulus of elasticity of steel, psi (Table 10.32.1A and Articles 10.15.3, 10.36, 10.37, 10.39.4.4.2, 10.54.1, and 10.55.1)

E_c = modulus of elasticity of concrete, psi (Article 10.38.5.1.2)

F = maximum induced stress in the bottom flange (Article 10.20.2.1)

F = maximum compressive stress, psi (Article 10.41.4.6)

F_a = allowable axial unit stress (Table 10.32.1A and Articles 10.36, 10.37.1.2, and 10.55.1)

F_b = allowable bending unit stress (Table 10.32.1A and Articles 10.37.1.2 and 10.55.1)

F_{cr} = buckling stress of the compression flange plate or column (Articles 10.51.1, 10.51 5, 10.54.1.1, and 10.54.2.1)

F_{bx} = compressive bending stress permitted about the X-axis (Article 10.36)

F_{by} = compressive bending stress permitted about the Y-axis (Article 10.36)

F_D = maximum horizontal force (Article 10.20.2.2)

F_e = Euler buckling stress (Articles 10.37.1, 10.54.2.1, and 10.55.1)

F_e' = Euler stress divided by a factor of safety (Article 10.36)

F_p = computed bearing stress due to design load (Table 10.32.3B)

F_s = limiting bending stress (Article 10.34.4)

F_{sr} = allowable range of stress (Table 10.3.1A)

F_y^r = specified minimum yield point of the reinforcing steel (Articles 10.38.5.1.2)

$F.S.$ = factor of safety (Table 10.32.1A and Articles 10.32.1 and 10.36)

F_u = specified minimum tensile strength (Tables 10.32.1A and 10.32.3B, Article 10.18.4)

F_u = tensile strength of electrode classification (Table 10.56A and Article 10.32.2)

F_v = allowable shear stress (Tables 10.32.1A, 10.32.3B and Articles 10.32.2, 10.32.3, 10.34.4, 10.40.2.2)

F_v = shear strength of a fastener (Article 10.56.1.3)

F_{vc} = combined tension and shear in bearing-type connections (Article 10.56.1.3)

F_y = specified minimum yield point of steel (Articles 10.15 .2.1, 10.15.3, 10.16.11, 10.32.1, 10.32.4, 10.34, 10.35, 10.37.1 .3, 10.38.5, 10.39.4, 10.40.2.2, 10.41.4.6, 10.46, 10.48, 10.49, 10.50, 10.51.5, and 10.54)

F_{yf} = specified minimum yield strength of the flange (Article 10.48.1.1, and 10.53.1)

F_{yw} = specified minimum yield strength of the web (Article 10.53.1)

f_a = computed axial compression stress (Articles 10.35.2.10, 10.36, 10.37, 10.55.2, and 10.55.3)

f_b = computed compressive bending stress (Articles 10.34.2, 10.34.3, 10.34.5.2, 10.37, 10.39, and 10.55)

f_c' = unit ultimate compressive strength of concrete as determined by cylinder tests at age of 28 days, psi (Articles 10.38.1, 10.38.5.1.2, 10.45.3, and 10.50.1.1.1)

$f_{d\ell 1}$ = top flange compressive stress due to noncomposite dead load (Article 10.34.2.1, 10.34.2.2 and 10.50(c))

f_r = range of stress due to live load plus impact, in the slab reinforcement over the support (Article 10.38.5.1.3)

f_s = maximum longitudinal bending stress in the flange of the panels on either side of the transverse stiffener (Article 10.39.4.4)

f_t = tensile stress due to applied loads (Articles 10.32.3.3.3 and 10.56.1.3.2)

f_v = unit shear stress (Articles 10.32.3.2.3 and 10.34.4.4)

f_{bx} = computed compressive bending stress about the x axis (Article 10.36)

f_{by} = computed compressive bending stress about the y axis (Article 10.36)

g = gage between fasteners, inches (Articles 10.16.14 and 10.24.5)

H = height of stud, inches (Article 10.38.5.1.1)

h = average flange thickness of the channel flange, inches (Article 10.38.5.1.2)

I = moment of inertia, in.^{4} (Articles 10.34.4, 10.34.5, 10.38.5.1.1, 10.48.5.3, and 10.48.6.3)

I_s = moment of inertia of stiffener (Articles 10.37.2, 10.39.4.4.1, and 10.51.5.4)

I_t = moment of inertia of transverse stiffeners (Article 10.39.4.4.2)

I_y = moment of inertia of member about the vertical axis in the plane of the web, in.^{4} (Article 10.48.4.1)

I_{yc} = moment of inertia of compression flange about the vertical axis in the plane of the web, in.^{4} (Table 10.32.1A, Article 10.48.4.1)

J = required ratio of rigidity of one transverse stiffener to that of the web plate (Articles 10.34.4.7 and 10.48.5.3)

J = in.^{4} (Table 10.32.1A, Article 10.48.4.1) St. Venant torsional constant

K = effective length factor in plane of buckling (Table 10.32.1A and Articles 10.37, 10.54.1 and 10.54.2)

K_b = effective length factor in the plane of bending (Article 10.36)

k = constant: 0.75 for rivets; 0.6 for high-strength bolts with thread excluded from shear plane (Article 10.32.3.3.4)

k = buckling coefficient (Articles 10.34.4, 10.39.4.3, 10.48.8, and 10.51.5.4)

k = distance from outer face of flange to toe of web fillet of member to be stiffened (Article 10.56.3)

k_1 = buckling coefficient (Article 10.39.4.4)

L = distance between bolts in the direction of the applied force (Table 10.32.3B)

L = actual unbraced length (Table 10.32.1A and Articles 10.7.4, 10.15.3, and 10.55.1)

L = ½ of the length of the arch rib (Article 10.37.1)

L = distance between transverse beams (Article 10.41.4.6)

L_b = unbraced length (Table 10.48.2.1A and Articles 10.36, 10.48.1.1, 10.48.2.1, 10.48.4.1, and 10.53.1.3)

L_c = length of member between points of support, inches (Article 10.54.1.1)

L_p = limiting unbraced length (Article 10.48.4.1)

L_r = limiting unbraced length (Article 10.48.4.1)

ℓ = member length (Table 10.32.1A and Article 10.35.1)

M = maximum bending moment (Articles 10.48.8, and 10.54.2.1)

M_1 = moments at the ends of a member

M_1 & M_2 = moments at two adjacent braced points (Table 10.32.1A, Articles 10.36A and 10.48.4.1)

M_c = column moment (Article 10.56.3.2)

M_p = full plastic moment of the section (Articles 10.50.1.1.2 and 10.54.2.1)

M_r = lateral torsional buckling moment or yield moment (Articles 10.48.4.1 and 10.53.1.3)

M_s = elastic pier moment for loading producing maximum positive moment in adjacent span (Article 10.50.1.1.2)

M_u = maximum bending strength (Articles 10.48, 10.51.1, 10.53.1, and 10.54.2.1)

N_1 & N_2 = number of shear connectors (Article 10.38.5.1.2)

N_c = number of additional connectors for each beam at point of contraflexure (Article 10.38.5.1.3)

N_s = number of slip planes in a slip critical connection (Articles 10.32.3.2.1 and 10.57.3.1)

N_w = number of roadway design lanes (Article 10.39.2)

n = ratio of modulus of elasticity of steel to that of concrete (Article 10.38.1)

n = number of longitudinal stiffeners (Articles 10.39.4.3, 10.39.4.4, and 10.51.5.4)

P = allowable compressive axial load on members (Article 10.35.1)

P = axial compression on the member (Articles 10.48.1.1, 10.48.2.1, and 10.54.2.1)

$P, P_1,$
P_2 & P_3 = force in the slab (Article 10.38.5.1.2)

P_s = allowable slip resistance (Article 10.32 2.2.1)

P_u = maximum axial compression capacity (Article 10.54.1.1)

p = allowable bearing (Article 10.32.4.2)

Q = prying tension per bolt (Articles 10.32.3.3.2 and 10.56.2)

Q = statical moment about the neutral axis (Article 10.38.5.1.1)

Q_u = ultimate strength of a shear connector (Article 10.50.1.1. 1)

R = radius (Article 10.15.2.1)

R = number of design lanes per box girder (Article 10.39.2.1)

R = reduction factor for hybrid girders (Articles 10.40.2.1.1, 10.53.1.2, and 10.53.1.3)

R_b = bending capacity reduction factor (Articles 10.48.4.1, and 10.53.1.3)

Rev = a range of stress involving both tension and compression during a stress cycle (Table 10.3.1B)

R_s = vertical force at connections of vertical stiffeners to longitudinal stiffeners (Article 10.39.4.4.8)

R_w = vertical web force (Article 10.39.4.4.7)

r = radius of gyration, inches (Articles 10.35.1, 10.37.1, 10.41.4.6, 10.48.6.3, 10.54.1.1, 10.54.2.1, and 10.55.1)

r_b = radius of gyration in plane of bending (Article 10.36)

r_y = radius of gyration with respect to the Y – Y axis (Article 10.48.1.1)

r' = radius of gyration in inches of the compression flange about the axis in the plane of the web (Table 10.32.1A, Article 10.48.4.1)

S = allowable rivet or bolt unit stress in shear (Article 10.32.3.3.4)

S = section modulus, in.^{3} (Articles 10.48.2, 10.51.1, 10.53.1.2, and 10.53.1.3)

S = pitch of any two successive holes in the chain (Article 10.16.14.2)

S_r = range of horizontal shear (Article 10.38.5.1.1)

S_s = section modulus of transverse stiffener, in3 (Articles 10.39.4.4 and 10.48.6.3)

S_t = section modulus of longitudinal or transverse stiffener, in.^{3} (Article 10.48.6.3)

S_u = ultimate strength of the shear connector (Article 10.38.5.1.2)

S_{xc} = section modulus with respect to the compression flange, in.^{3} (Table 10.32.1A, Article 10.48.4.1)

s = computed rivet or bolt unit stress in shear (Article 10.32.3.3.4)

T = range in tensile stress (Table 10.3.1B)

T = direct tension per bolt due to external load (Articles 10.32.3 and 10.56.2)

T = arch rib thrust at the quarter point from dead + live + impact loading (Articles 10.37.1 and 10.55.1)

t = thickness of the thinner outside plate or shape (Article 10.35.2)

t = thickness of members in compression (Article 10.35.2)

t = thickness of thinnest part connected, inches (Articles 10.32.3.3.2 and 10.56.2)

t = computed rivet or bolt unit stress in tension, including any stress due to prying action (Article 10.32.3.3.4)

t = thickness of the wearing surface, inches (Article 10.41.2)

t = flange thickness, inches (Articles 10.34.2.1, 10.39.4.2, 10.48.1.1, 10.48.2.1, 10.50, and 10.51.5.1)

t = thickness of a flange angle (Article 10.34.2.2)

t = thickness of the web of a channel, in. (Article 10.38.5.1.2)

t = thickness of stiffener (Article 10.48.5.3)

t_b = thickness of flange delivering concentrated force (Article 10.56.3.2)

t_c = thickness of flange of member to be stiffened (Article 10.56.3.2)

t_f = thickness of the flange (Articles 10.37.3, 10.55.3 and 10.39.4.3)

t_s = thickness of stiffener (Article 10.37.2 and 10.55.2)

t_s = slab thickness (Articles 10.38.5.1.2, 10.50.1.1.1, 10.50.1.1.2)

t_w = web thickness, inches (Articles 10.15.2.1, 10.34.3, 10.34.4, 10.34.5, 10.37.2, 10.48, 10.49.2, 10.49.3, 10.55.2, and 10.56.3)

t_{tf} = thickness of top flange (Article 10.50.1.1.1)

t' = thickness of outstanding stiffener element (Articles 10.39.4.5.1 and 10.51.5.5)

V = shearing force (Articles 10.35.1, 10.48.5.3, 10.48.8, and 10.51.3)

V_p = shear yielding strength of the web (Articles 10.48.8 and 10.53.1.4)

V_r = range of shear due to live loads and impact, kips (Article 10.38.5.1.1)

V_u = maximum shear force (Articles 10.34.4, 10.48.5.3, 10.48 .8, and 10.53.1.4)

V_v = vertical shear (Article 10.39.3.1)

V_w = design shear for a web (Articles 10.39.3.1 and 10.51.3)

W = length of a channel shear connector, inches (Article 10.38.5.1.2)

W_c = roadway width between curbs in feet or barriers if curbs are not used (Article 10.39.2.1)

W_L = fraction of a wheel load (Article 10.39.2)

w = length of a channel shear connector in inches measured in a transverse direction on the flange of a girder (Article 10.38.5.1.1)

w = unit weight of concrete, lb. per cu. ft. (Article 10.38.5.1.2)

w = width of flange between longitudinal stiffeners (Articles 10.39.4.3, 10.39.4.4, and 10.51.5.4)

Y = ratio of web plate yield strength to stiffener plate yield strength (Articles 10.34.4 and 10.48.5.3)

Y_o = distance from the neutral axis to the extreme outer fiber, inches (Article 10.15.3)

$\bar{y}$ = location of steel sections from neutral axis (Article 10.50.1.1.1)

Z = plastic section modulus (Articles 10.48.1, 10.53.1.1, and 10.54.2.1)

Z_r = allowable range of horizontal shear, in pounds on an individual connector (Article 10.38.5.1)

α = constant based on the number of stress cycles (Article 10.38.5.1.1)

α = minimum specified yield strength of the web divided by the minimum specified yield strength of the tension flange (Articles 10.40.2 and 10.40.4)

β = area of the web divided by the area of the tension flange (Articles 10.40.2 and 10.53.1.2)

ρ = F_{yw}/F_{yf} (Article 10.53.1.2)

θ	= angle of inclination of the web plate to the vertical (Articles 10.39.3.1 and 10.51.3)
ψ	= ratio of total cross sectional area to the cross sectional area of both flanges (Article 10.15.2)
ψ	= distance from the outer edge of the tension flange to the neutral axis divided by the depth of the steel section (Articles 10.40.2 and 10.53.1.2)
Δ	= amount of camber, inches (Article 10.15.3)
Δ_{DL}	= dead load camber in inches at any point (Article 10.15.3)
Δ_m	= maximum value of Δ_{DL}, inches (Article 10.15.3)
ϕ	= reduction factor (Articles 10.38.5.1.2, 10.56.1.1, and 10.56.1.3)
ϕ	= longitudinal stiffener coefficient (Articles 10.39.4.3 and 10.51.5.4)
μ	= slip coefficient in a slip-critical joint (Article 10.57.3)

Abbreviations

BDS	= *Bridge Design Specifications* manual

4.0 Introduction

This section illustrates Load Factor Design (LFD) for a continuous, welded, structural steel girder highway bridge, composite for positive live load moments according to Section 10 of the *Bridge Design Specifications* (BDS).

In addition to being classified as symmetrical or unsymmetrical as shown in Figure 4-1, steel girders can be further categorized as follows:

- Compact
- Non-compact
- Braced
- Unbraced
- Transversely stiffened
- Longitudinally stiffened
- Composite
- Non-composite
- Hybrid

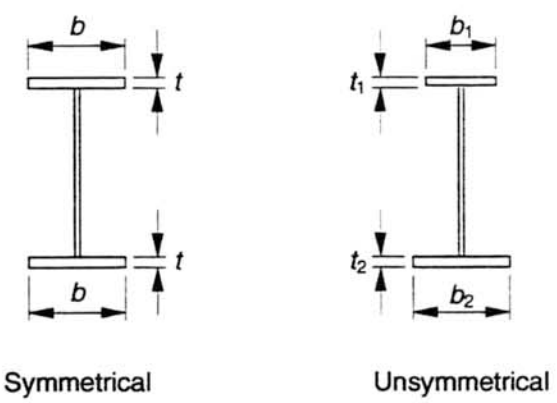

Figure 4-1 Types of Steel Girders

The steel girders designed by Caltrans are usually welded plate girders. Typically these are non-compact and transversely stiffened; they can be either braced or unbraced. The use of longitudinal stiffeners should be avoided if possible as they lead to complicated details and, when extended into tension zones, become a fatigue consideration. Non-composite girders are generally symmetrical.

A plate girder is a beam built up from plate elements to achieve a more efficient arrangement of material. Plate girders are economical in the span range between 100 to 300 feet. Since the 1950's steel girders designed by Caltrans have been welded plate girders. They are shop welded using two flange plates and one web plate to make an I-shaped cross section as shown in Figure 4-2.

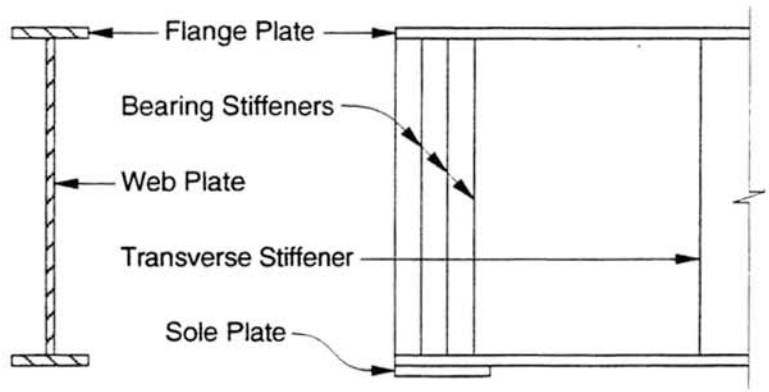

Figure 4-2 Details of Welded Steel Plate Girder

4.1 General Design Considerations

Members designed by the load factor design (LFD) method are proportioned for a number of design loads. They are required to meet three main theoretical load levels:

1. Maximum Design Load
2. Overload
3. Service Load

The maximum design load and overload requirements are based on multiples of the service loads with certain other coefficients necessary to insure the required capabilities of the structure. The maximum design load criteria insures the structures capability of withstanding a few passages of exceptionally heavy vehicles.

The overload criteria insures control of permanent deformation in a member caused by occasional overweight vehicles as specified in BDS, Article 10.57.

Service loads are utilized for the serviceability criteria to limit the live load deflection and provide an adequate fatigue life of a member.

4.2 Design Loads

The moments and shears are determined by subjecting the girder to the design loads. Elastic analysis is used to calculate the various straining actions.

The design loads are given by

For HS20: $1.3\ [\ D + \frac{5}{3}(L + I)]$

For permit loading: 1. widely spaced $1.3\ [D + (L + I)_{HS20} + 1.15\ (L + I)_{P13}]$
2. closely spaced $1.3\ [D + (L + I)_{P13}]$

Where D = dead load, L = live load (HS20, P13), I = impact. The factor 1.3 is included to compensate for uncertainties in strength, theory, loading, analysis and material properties. Also, the factors $\frac{5}{3}$ and 1.15 are incorporated to allow for variability in overloads.

4.3 Design for Maximum Loads

Welded plate girders of normal proportions are not likely to satisfy the requirements for a compact section, which is capable of developing full plastic stress distribution. Usually welded plate girders are non-compact braced or unbraced sections. The non-compact braced section is a section that can develop yield strength in the compression flange before the onset of local buckling, but it cannot resist inelastic deformation required for full plastic stress distribution.

4.3.1 Braced Sections

For non-compact braced section;

$$M_u = F_y S \qquad (10\text{-}97)$$

Where F_y = yield stress and S = elastic section modulus.

The section modulus consequently must be proportioned so that

$$F_y S \geq 1.3[D + \tfrac{5}{3}(L + I)_{HS20}]$$

$$\geq 1.3[D + (L + I)_{HS20} + 1.15(L + I)_{P13}] \text{ for widely spaced}$$

$$\geq 1.3[D + (L + I)_{P13}] \text{ for closely spaced}$$

For the relationship to be permitted, the following criteria must be satisfied:

1. Width-thickness ratio of the compression flange:

$$\frac{b'}{t} \leq \frac{2,200}{\sqrt{F_y}} \quad \text{(10-98)}$$

where b' = width of projecting flange element = $\frac{b}{2}$
t = flange thickness

2. Depth – thickness ratio of the web:

$$\frac{D_c}{t_w} \leq \frac{15,400}{\sqrt{F_y}} \quad \text{(10-99)}$$

Where D_c is the depth of the web in compression and t_w is the web thickness. However, for a symmetrical section this ratio can be exceeded by providing transverse stiffeners and meeting

$$\frac{D}{t_w} \leq \frac{36,500}{\sqrt{F_y}} \quad \text{(10-103) and (10.50(d))}$$

or for an unsymmetrical section

$$\frac{D_c}{t_w} \leq \frac{18,250}{\sqrt{F_y}} \quad \text{(10-119)}$$

3. Spacing of lateral bracing of the compression flange :

$$L_b \leq \frac{20,000,000 A_f}{F_y d} \quad \text{(10-100)}$$

where A_f = cross sectional area of compression flange
d = total depth of girder

4.3.2 Unbraced Sections

When a girder does not meet the lateral bracing requirement, the section is considered an unbraced section and its ultimate moment capacity is given by:

$$M_u = M_r R_b \qquad (10\text{-}102a)$$

Where M_u is the maximum bending strength, M_r is the lateral torsional buckling moment, and R_b is a bending capacity reduction factor.

When the compression region of a bending member does not have adequate lateral support, the member may deflect laterally in a torsional mode before the compressive bending stress reaches the yield stress. This mode of failure is known as "lateral torsional buckling" or simply "lateral buckling".

The tendency of the compression flange to twist is resisted by a combination of St. Venant and warping torsion. In resisting lateral buckling by warping torsion, the compression flange acts as a column susceptible to buckling in the lateral direction. In closed sections, such as box girders or tubes, torsional stiffness is generally very large and lateral buckling is not a concern. However, for open sections, such as plate girders, lateral buckling must be considered. Because of the complexity of the theoretical expressions for lateral buckling stress that take into account the simultaneous resistance to lateral buckling afforded by St. Venant and warping torsion, conservative simplified expressions have been developed for design use that consider the effects separately. Plate girders, usually deep girders, are controlled by warping torsion since the effect of St. Venant torsion is small. The ultimate moment capacity for unbraced section, as used in AASHTO Specifications prior to the fifteen edition, is:

$$M_u = F_y S\left[1 - \frac{3F_y}{4\pi^2 E}\left(\frac{L_b}{b'}\right)^2\right]$$

This equation treats the compression flange as a column, provided that the compression flange is not smaller in width than the tension flange. When using the equation, the moment capacity may be increased 20% when the ratio of the end moments is less than 0.7, but cannot exceed $F_y S$. The specifications also limit the stress in the top flange of a composite girder to $0.6F_y$ under dead load. However, if the width of the compression flange is smaller than the tension flange, then the above equation is unconservative and the moment capacity should be calculated using

$$M_u = M_r R_b \qquad (10\text{-}102a)$$

4.3.3 Shear Capacity and Design

The shear capacity of girder webs with transverse stiffeners is given by:

$$V_u = V_p\left[C + \frac{0.87(1-C)}{\sqrt{1+\left(\frac{d_o}{D}\right)^2}}\right] \quad \text{(10-113)}$$

This equation combines the "beam action" and the "tension field action." The first term of the equation represents web buckling under shear and the second term represents the additional post-buckling strength.

$$V_p = \text{plastic shear capacity} = 0.58\,F_y D\,t_w \quad \text{(10-114)}$$

and

$$C = \frac{\text{web buckling shear stress}}{\text{web shear yield stress}}$$

Depending on the value of D/t_w the web can be one of three cases which is given in Article 10.48:

1. Yielding: $\frac{D}{t_w} < \frac{6{,}000\sqrt{k}}{\sqrt{F_y}}$: $C = 1.0$

2. Inelastic buckling: $\frac{6{,}000\sqrt{k}}{\sqrt{F_y}} \le \frac{D}{t_w} \le \frac{7{,}500\sqrt{k}}{\sqrt{F_y}}$: $C = \frac{6{,}000\sqrt{k}}{\left(\frac{D}{t_w}\right)\sqrt{F_y}}$ ..... (10-115)

3. Elastic buckling: $\frac{D}{t_w} > \frac{7{,}500\sqrt{k}}{\sqrt{F_y}}$: $C = \frac{4.5\times10^7 k}{\left(\frac{D}{t_w}\right)^2 F_y}$ ..... (10-116)

where k is the buckling coefficient given by: $k = 5 + \frac{5}{(d_o/D)^2}$

Generally, the effect of bending on the shear strength of a girder can be ignored. However, if the bending M exceeds $0.75\,M_u$ and the shear capacity is calculated from Equation 10-113, then the shear at that section should be limited to:

$$V = V_u\left[2.2 - 1.6\frac{M}{M_u}\right] \quad \text{(10-117)}$$

Spacing of transverse stiffeners along a girder should not exceed d_o determined from V_u formula nor $3D$. However, for transversely stiffened plate girders with D/t_w >150, the stiffener spacing shall not exceed

$$D\left[\frac{260}{D/t_w}\right]^2$$ to ensure efficient handling, fabrication and erection of the girder.

At simply supported ends of girders, the first stiffener space shall be such that the applied shear will not exceed the plastic or buckling shear force:

$$V = CV_p \quad \text{(10-112)}$$

and the maximum spacing is limited to $1.5D$.

Transverse stiffeners should be proportioned so that the width-thickness ratio shall be

$$\frac{b'}{t} \le \frac{2{,}600}{\sqrt{F_y}} \quad \text{(10-104)}$$

Also, the gross cross-sectional area of each one-sided stiffener or pair of two-sided stiffeners shall be at least

$$A = \left[0.15BDt_w(1-C)\frac{V}{V_u} - 18t_w^2\right]Y \ge 0 \quad \text{(10-105)}$$

where Y = ratio of web yield strength to stiffener yield strength; $B = 1.0$ for stiffener pairs; $B = 2.4$ for single plates, and; C is the value used in computation of V_u.

In addition, the required moment of inertia of stiffeners with respect to midplane of web is

$$I = d_o t_w^3 J \quad \text{(10-106)}$$

where $J = 2.5\left(\frac{D}{d_o}\right)^2 - 2 \ge 0.5$ (10-107)

4.4 Composite Girders

In the non-composite type of steel girder bridge, the entire dead load and live load of the superstructure is supported by the steel girders alone, with the deck only transmitting loads to the girders. However, in composite construction, the concrete deck is keyed to the steel girders by mechanical means and may thus be considered a component part of the girder.

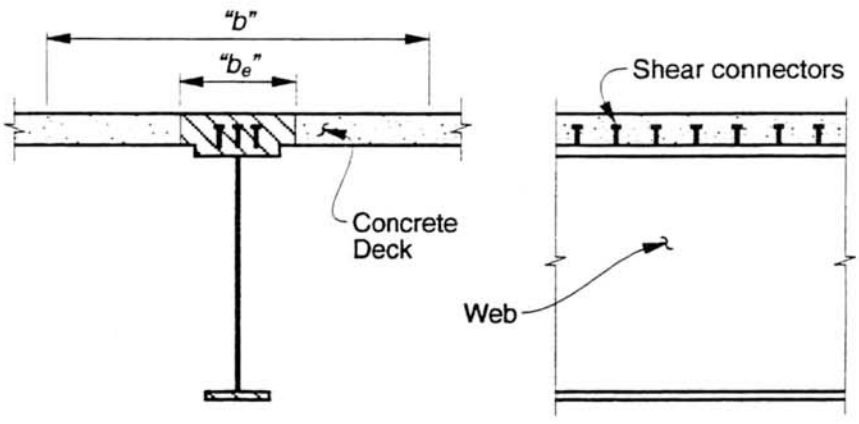

Figure 4-3 Details of Composite Steel Girder

Figure 4-3 shows a section and elevation view of a typical composite girder. The concrete deck is keyed to the steel girder by shear connectors, therefore, the deck serves as additional upper flange area for the steel girder.

In accordance with BDS, Article 10.38.3.1, the assumed effective width of the concrete deck shall not exceed the following:

(a) one-fourth of the span length of the girder.

(b) the distance center to center of girders.

(c) twelve times the least thickness of slab

Since the modulus of elasticity of the concrete deck is different from that of the steel girders, the effectiveness of the concrete as flange material is a function of the modular ratio $n = E_s/E_c$. The equivalent net composite section is usually obtained by converting the effective concrete area to an equivalent area of steel. Thus in Figure 4-3 the equivalent width of concrete, b_e, equals the effective width, b, divided by n. When the concrete deck has been

converted to an equivalent area of steel, the section may be considered to be a steel girder composed of (1) the original steel girder and (2) an additional rectangular flange of width b_e. The composite bridge steel girder is usually designed as a composite for live load and non-composite for dead load. Since intermediate temporary supports are not normally used during deck placement, the steel girder alone has to carry its own weight in addition to the weight of the deck. Once the concrete hardens the girder and deck will act as a composite section. Usually three types of loading act on the girder:

1. Dead load (weight of girder and slab)
2. Additional dead load (rail, AC overlay)
3. Live load

For design purposes the girder is considered a non-composite section for dead load and a full composite section for live load. However, for additional dead load (AC overlay + rail) the girder will act as a partially composite section. This is because the additional dead load will cause sustained stress on the concrete section. Due to this sustained stress, the concrete will undergo plastic flow, and its effectiveness in resisting stress will be reduced. The main reason of this plastic flow is the creep of concrete. One conservative way to account for the creep of concrete under sustained loading is to reduce the elastic modulus E_c to $^1/_3E_c$ which means increasing n to $3n$ as in the BDS Article 10.38.1.4.

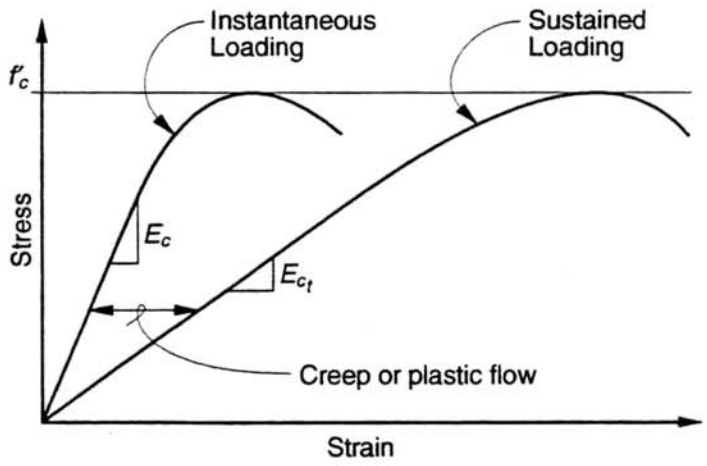

Figure 4-4 Effect of Creep on Concrete

4.5 Fatigue Design

The fatigue provisions of the bridge design specifications were developed from research and studies of failures in the field with respect to in-plane bending; out-of-plane bending is not addressed. Details for main load carrying members, such as butt weld at tension flanges and stiffener welds, are familiar to designers. However, the effects of connections to the main members are not as familiar and have been a source of an increasing number of fatigue problems.

Fatigue may be defined as the initiation and/or propagation of cracks due to repeated variation of normal stresses which include a tensile component. Therefore, fatigue is the process of cumulative damage that is caused by repeated fluctuating loads.

Fatigue damage for a component that is subjected to normally elastic stress fluctuations occurs at regions of stress raisers. After a certain number of load fluctuations, the accumulated damage causes the initiation and subsequent propagation of a crack or cracks in the plastically damaged regions. This process can and in many cases does cause fracture of components. The more severe the stress concentration, the shorter the time to initiate a fatigue crack for the same stress cycle.

4.5.1 Factors Affecting Fatigue Performance

Many parameters affect the fatigue performance of structural components. They include parameters related to stress, geometry and properties of the component, and external environment.

The stress parameters include stress range, constant or variable loading and frequency. The geometry and properties of the component include stress raisers, size, stress gradient and mechanical properties of the base metal and weldment. The external environment parameters include temperature and aggressiveness of the environment. The major factors that govern fatigue are:

- applied stress range
- number of load cycles applied
- type of detail

Structures are typically designed with a finite fatigue life of fifty years, however, an infinite fatigue life could be designed for with proper consideration to the items listed above. It is important to note that once fatigue cracks develop, it does not imply that the useful life of the structure has ended. Usually with minor repairs the structure can still function in the same capacity for many years.

4.5.2 Applied Stress Range

The applied stress range may be defined as the algebraic difference between extreme stresses resulting from the passage of load across the structure. If, as in a compression member, the stress range remains within compressive values there is no fatigue considerations.

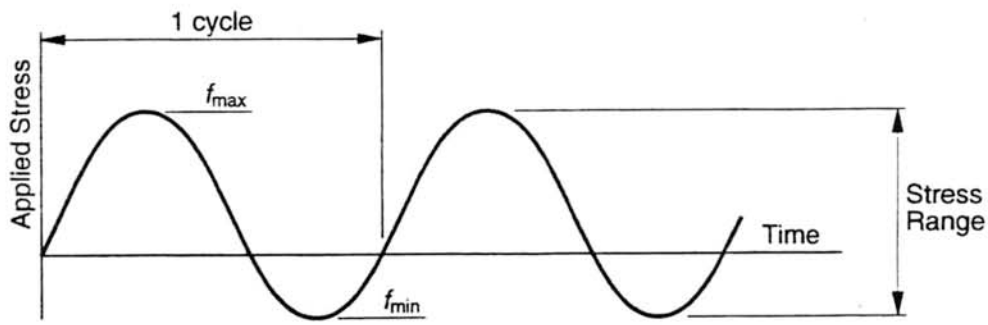

Figure 4-5 Constant Amplitude Cycles

The above figure represents the simplest stress history which is the constant-amplitude cyclic-stress fluctuation. The stress range is the algebraic difference between the maximum stress, f_{max}, and the minimum stress, f_{min}, in the cycle.

$$f_{sr} = f_{max} + |f_{min}|$$

The other type of stress history is the variable-amplitude random-sequence stress history as shown in the Figure 4-6. This is a very complex history and cannot be represented by an analytical function. The truck loading on bridges is a particular example of this stress history.

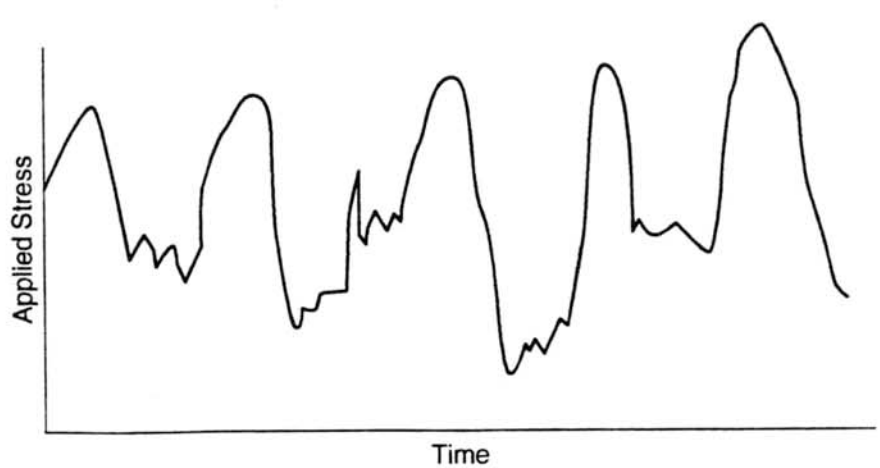

Figure 4-6 Variable Amplitude Cycles

4.5.3 Allowable Stress Range

The following items control the allowable stress range.

1. type of loading
2. stress category (connection detail)
3. redundancy

4.5.4 Type of Loading

The number of cycles has a significant affect on the fatigue design. Generally, by increasing the number of cycles, the allowable stress range would decrease.

The number of cycles used for fatigue design depends on the type of road and live load. For example, "Case I", which is the most used case for freeways (an average daily truck traffic which exceeds 2,500), has the following live load cycles to consider for longitudinal members:

1. HS20 (multi-truck) ..... 2,000,000 cycles
2. HS20 (multi-lane) ..... 500,000 cycles
3. Single HS20 (truck) ..... over 2,000,000 cycles
4. P Loading (P13 with HS20) ..... 100,000 cycles

4.5.5 Stress Category

The main stress categories A, B, C, D, E and F are described in Table 10.3.1B and illustrated in Figure 10.3.1C of the *Bridge Design Specifications*. These categories correspond to plates and rolled beams; welds and welded beams and plate girders; stiffener and short (less than 2") attachments; intermediate (over 2" but less than 4") attachments; long (over 4") attachments and cover plates; and fillet welds in shear, respectively.

The most severe connection details are in category E and E′. These should be avoided as much as possible because they are regarded as poor details.

4.5.6 Redundancy

Bridge structures are considered non-redundant when the failure of a member or of a single element could cause collapse of the structure (such as a tension chord in a truss bridge). The design specification places increased restrictions on non-redundant structures by imposing lower allowable stress ranges in almost all categories. This reduction to a lower stress range makes details that fall into Category E very uneconomical and, in essence, restricts their use.

In summary, the fatigue allowable stress ranges and number of cycles represent a confidence limit for 95-percent survival of all details in a given category. Also, the stress ranges are governed by details that have the most severe geometrical discontinuities and/or imperfections. It is important to note that the fatigue crack/propagation is independent of the strength of steel. Therefore, the allowable stress ranges are independent of steel strength.

4.6 Charpy V-Notch Impact Requirements

Main load carrying member components subjected to tensile stress are required to provide impact properties as shown in the table below.

These impact requirements vary depending on the type of steel used and the average minimum service temperature to which the structure may be subjected.

The basis and philosophy used to develop these requirements are given in a paper entitled "The Development of AASHTO Fracture-Toughness Requirements for Bridge Steels" by John M. Barsom, February 1975, available from the American Iron and Steel Institute, Washington, D.C.

Charpy V-notch (CVN) impact values shall conform to the following minimum values:

Table 4-1 Fracture Toughness Requirements

Welded or Mechanically Fastened	Grade (Y.P./Y.S.)	Thickness (Inches)	Fracture-Critical			Non-Fracture-Critical		
			Zone 1 Ft-Lbs @ °F	Zone 2 Ft-Lbs @ °F	Zone 3 Ft-Lbs @ °F	Zone 1 Ft-Lbs @ °F	Zone 2 Ft-Lbs @ °F	Zone 3 Ft-Lbs @ °F
Welded	36	$t \leq 1\frac{1}{2}$	25 @ 70	25 @ 40	25 @ 10	15 @ 70	15 @ 40	15 @ 10
		$1\frac{1}{2} < t \leq 4$	25 @ 70	25 @ 40	25 @ −10	15 @ 70	15 @ 40	15 @ 10
	50/50W	$t \leq 1\frac{1}{2}$	25 @ 70	25 @ 40	25 @ 10	15 @ 70	15 @ 40	15 @ 10
		$1\frac{1}{2} < t \leq 2$	25 @ 70	25 @ 40	25 @ −10	15 @ 70	15 @ 40	15 @ 10
		$2 < t \leq 4$	30 @ 70	30 @ 40	30 @ −10	20 @ 70	20 @ 40	20 @ 10
	70W	$t \leq 1\frac{1}{2}$	30 @ 20	30 @ 20	30 @ −10	20 @ 50	20 @ 20	20 @ −10
		$1\frac{1}{2} < t \leq 2\frac{1}{2}$	30 @ 20	30 @ 20	30 @ −30	20 @ 50	20 @ 20	20 @ −10
		$2\frac{1}{2} < t \leq 4$	35 @ 20	35 @ 20	35 @ −30	25 @ 50	25 @ 20	25 @ −10
Mechanically Fastened	36	$t \leq 1\frac{1}{2}$	25 @ 70	25 @ 40	25 @ 10	15 @ 70	15 @ 40	15 @ 10
		$1\frac{1}{2} < t \leq 4$	25 @ 70	25 @ 40	25 @ −10	15 @ 70	15 @ 40	15 @ 10
	50/50W	$t \leq 1\frac{1}{2}$	25 @ 70	25 @ 40	25 @ 10	15 @ 70	15 @ 40	15 @ 10
		$1\frac{1}{2} < t \leq 4$	25 @ 70	25 @ 40	25 @ −10	15 @ 70	15 @ 40	15 @ 10
	70W	$t \leq 1\frac{1}{2}$	30 @ 20	30 @ 20	30 @ −10	20 @ 50	20 @ 20	20 @ −10
		$1\frac{1}{2} < t \leq 4$	30 @ 20	30 @ 20	30 @ −30	20 @ 50	20 @ 20	20 @ −10

The CVN-impact testing shall be "P" plate frequency testing in accordance with AASHTO T-243 (ASTM A673). For Zone 3 requirements only, Charpy impact tests are required on each plate at each end. The Charpy test pieces shall be coded with respect to heat/plate number and that code shall be recorded on the mill-test report of the steel supplier with the test result. If requested by the Engineer, the broken pieces from each test (three specimens, six halves) shall be packaged and forwarded to the Quality Assurance organization of the State. Use the average of three (3) tests. If the energy value for more than one of three test specimens is below the minimum average requirements, or if the energy value for one of the three specimens is less than two-thirds (⅔) of the specified minimum average requirements, a retest shall be made and the energy value obtained from each of the three retest specimens shall equal or exceed the specified minimum average requirements.

Zone 1: Minimum Service Temperature 0°F and above.

Zone 2: Minimum Service Temperature from –1°F to –30°F.

Zone 3: Minimum Service Temperature from –31°F to –60°F

4.7 Fracture Control Plan (FCP)

The FCP is a plan devised to prevent collapse of steel bridges. Much of the FCP relates to design, welding, and material properties. The designer has the responsibility for designating any member or structural component as a Fracture Critical Member (FCM) when failure of that member would cause the structure to collapse. The FCP requires the FCM be fabricated in a qualified shop and inspected by qualified inspectors; requires Nondestructive Inspection (NDI) by qualified testers; supplements the current AWS and AASHTO welding specifications; and specifies material toughness.

It is a comprehensive plan whose adoption should improve the overall quality of steel structures from design through fabrication.

For more detailed information see AASHTO's *Guide Specification for Fracture Critical Non-Redundant Steel Bridge Members.*

4.8 Design Example Problem

To illustrate load factor design, portions of an interior girder of a three-span bridge as shown in Figure 4-7 will be designed. The section in the positive-moment region consists of a welded steel girder acting compositely with the concrete slab. In the negative moment region, the section is designed as a non-composite section.

Roadway Section:	Figure 4-8 Typical Section
Specification:	*1992 Fifteenth Edition AASHTO* with Interims and Revisions by Caltrans
Loading:	1. Dead Load 2. Live Load; HS20-44 and alternative and permit design load
Structural Steel:	A709 Grade 50 – assume for web and flanges A709 Grade 36 – assume for stiffeners, etc.
Concrete:	$f_c' = 3{,}250$ psi, modular ratio $n = 9$

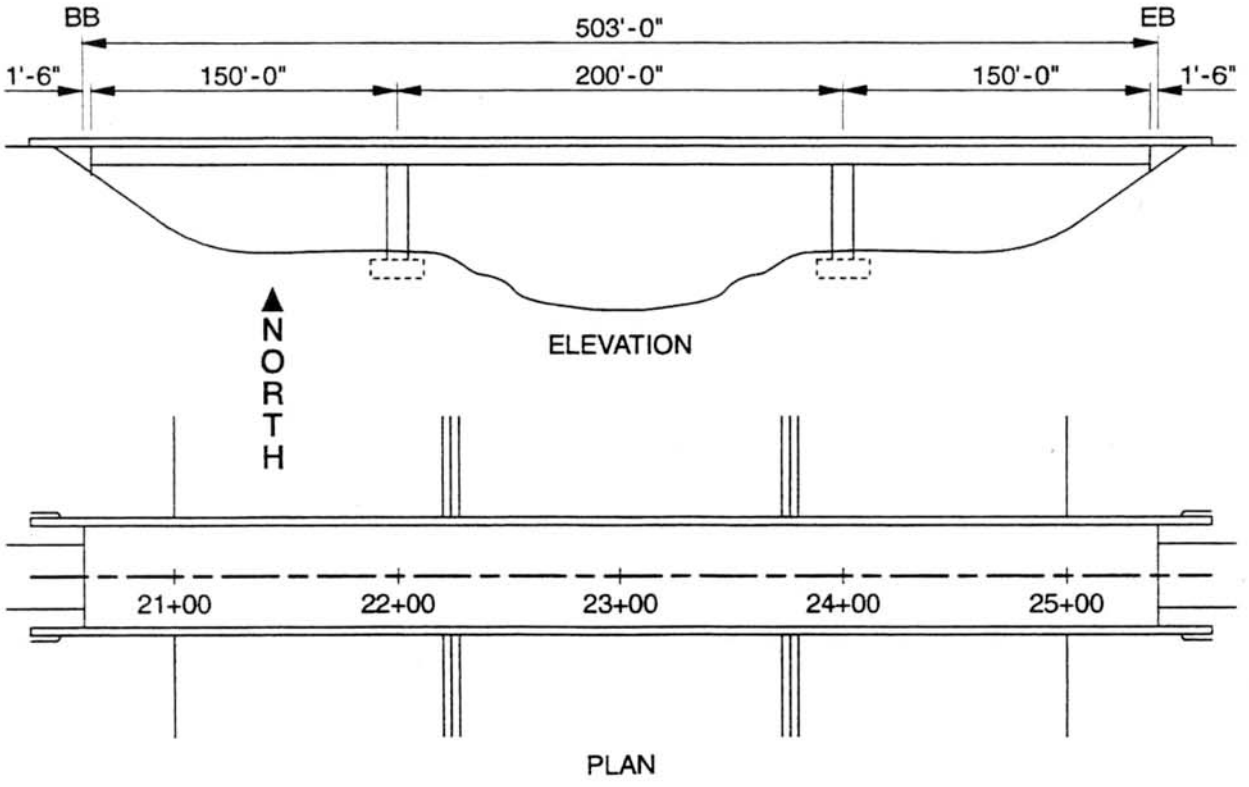

Figure 4-7 Design Example

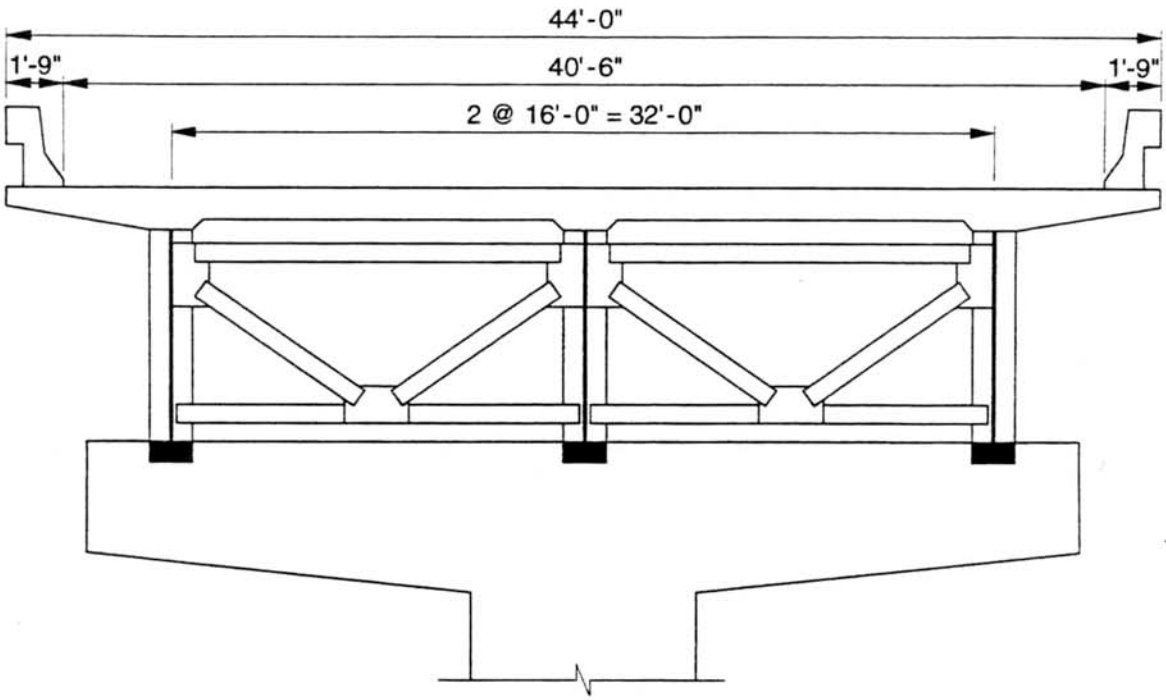

Figure 4-8 Typical Section

4.9 Loading

Since the spacing between girders exceeds 14 feet (BDS Table 3.23.1), this is a widely spaced girder and should be checked for load combinations I_H and I_{PW}.

I_H Group $= 1.3[D + \frac{5}{3}(L + I)_{HS20}]$

I_{PW} Group $= 1.3[D + (L + I)_{HS20} + 1.15(L + I)_{P13}]$

4.9.1 Dead Load

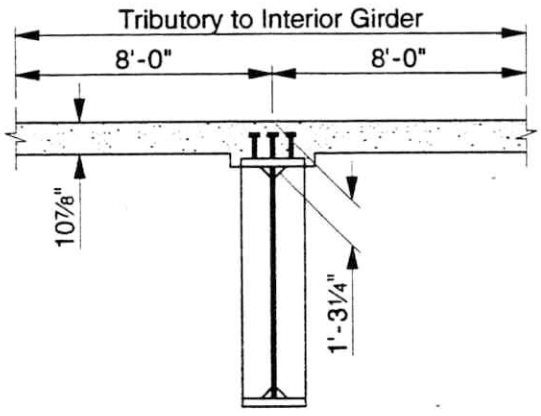

Figure 4-9 Interior Girder Cross Section

Concrete Slab: Assume transverse deck design has been completed and a 10⅞" thick deck has been selected.

Area = (10⅞/12)(16) = 14.50 ft^2

w = 14.50 (0.150) = 2.18 k/ft

Steel Girder:

w = 0.30 k/ft (including bracing and fillet welds) (estimated weight)

Type 25 Concrete Barriers:

w = ⅓(2)(2.61)(0.15) = 0.26 k/ft

AC Overlay:

w = 0.035 (16) = 0.56 k/ft

Dead Load of steel girder and slab = 2.18 + 0.30 = 2.5 k/ft

Dead Load of rail and AC overlay = 0.26 + 0.56 = 0.82 k/ft

4.9.2 Live Load

For widely spaced girders, the load on each girder will be the reaction of the wheel loads assuming the deck between the girders acts as a simple beam.

Number of traffic lanes:

width of deck between rails = 44 – 2(1.75) = 40.5 ft

From BDS 3.6, a traffic lane is 12 feet wide

$$\text{number of traffic lanes} = \frac{40.5}{12} = 3.38 \therefore \text{number of design traffic lanes} = 3.$$

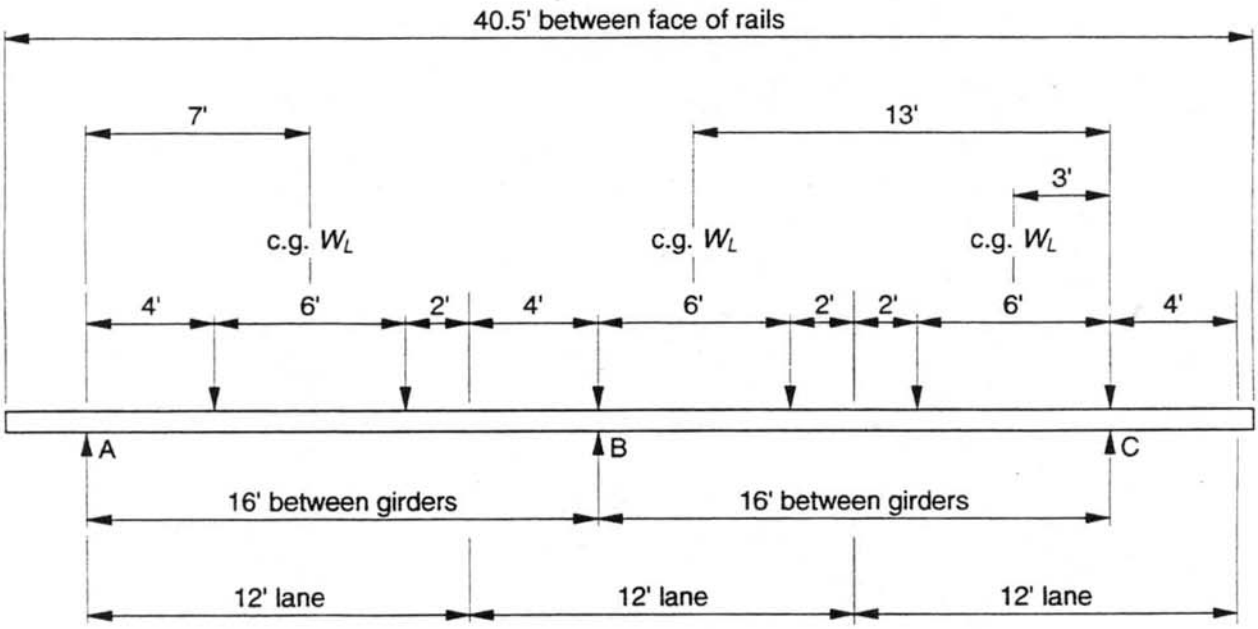

Figure 4-10 Location of 3 Traffic Lanes for Maximum Load at B (HS20)

Live Load contributory reaction at Interior Girder B (3 lanes)

$$R_B = \frac{(13+3)}{16} + \frac{7}{16} = 1.44$$

number of live load lanes = 1.44

However, according to BDS 3.12.1, for 3 lanes use 90% of maximum.

number of design live load lanes = 0.90(1.44) = 1.30 lanes HS20

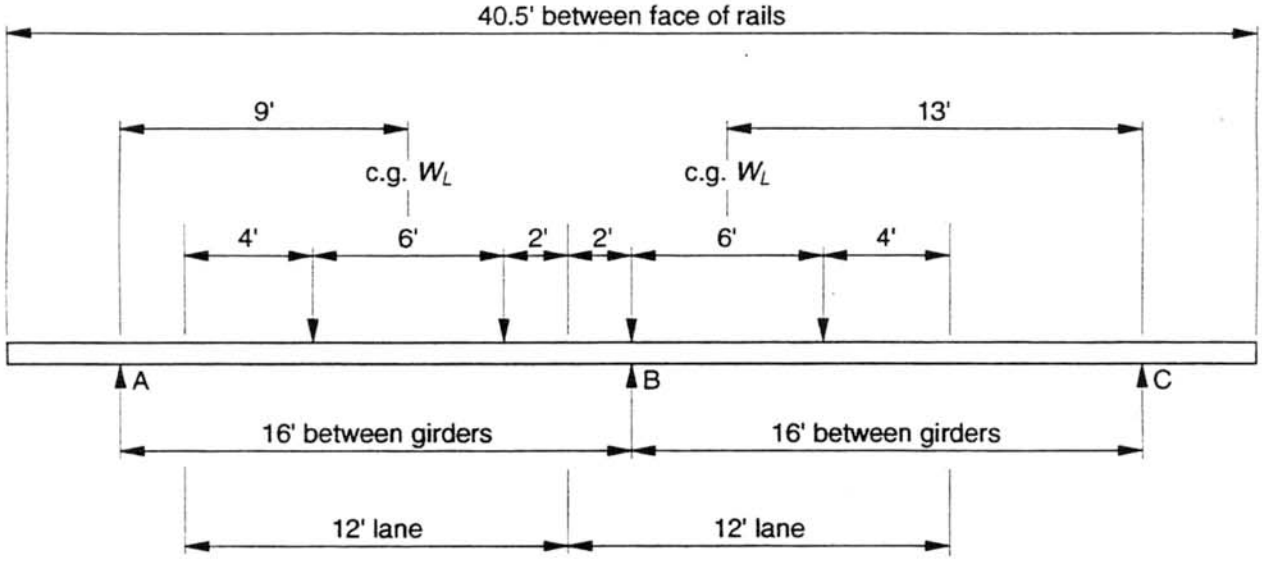

Figure 4-11 Location of 2 Traffic Lanes for Maximum Load at B (HS20)

Live Load contributory reaction at Interior Girder B (2 lanes)

$$R_B = \frac{13}{16} + \frac{9}{16} = 1.38$$

number of design live load lanes = 1.38 lanes HS20 > 1.30 for 3-lane trial

∴ For I_H Group, live load distribution = 1.38 lanes

$I_H = 1.3[D + 5/3(1.38)(L + I)_{HS20}]$

$I_H = 1.3D + 3.0(L + I)_{HS20}$ (See footnote below)

In these expressions the term $(L+I)$ represents the effects of one lane of the designated live load, including impact.

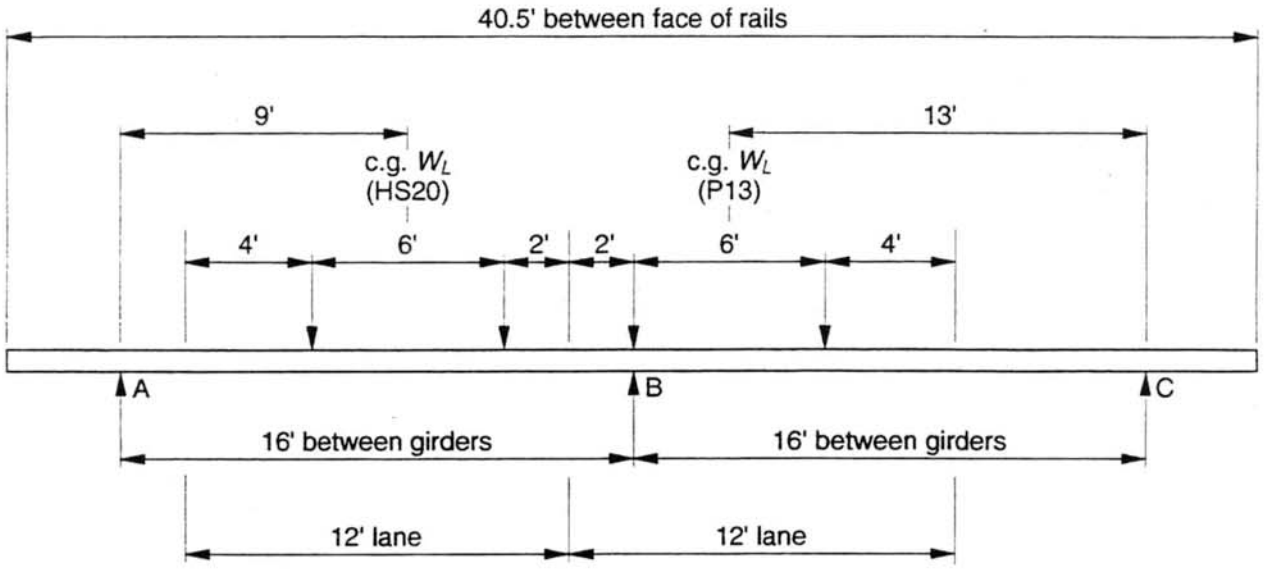

Figure 4-12 Location of 2 Traffic Lanes for Maximum Load at B (P13 with HS20)

Live Load contributory reaction at Interior Girder B

P13: $R_B = \frac{13}{16} = 0.81$ lanes

HS20: $R_B = \frac{9}{16} = 0.56$ lanes

For I_{PW} Group

$$I_{PW} = 1.3\ [D + 0.56(L+I)_{\text{HS20}} + 1.15(0.81)(L+I)_{\text{P13}}]$$

$$I_{PW} = 1.3D + 0.73(L+I)_{\text{HS20}} + 1.22(L+I)_{\text{P13}}$$ (See footnote below)

In these expressions the term $(L+I)$ represents the effects of one lane of the designated live load, including impact.

4.10 Composite Section Design

This section illustrates the design of an interior girder of a composite section at 0.4 point of Span 1

4.10.1 Design Loads (*See Section 4-16, Bridge Design System Computer Output*)

Load on Steel Girder Only (Non-composite)

Dead Load girder and slab

- Moment = 1.3(3,590) = 4,667 k-ft
- Shear = 1.3(–15.2) = –19.8 k

Load on Partially Composite Section ($n = 3 \times 9 = 27$)

Dead Load rail and AC overlay

- Moment = 1.3(1,221) = 1,587 k-ft
- Shear = 1.3(–5.2) = –6.8 k

Load on Composite Section ($n = 9$)

Live Load Group I_H

- Maximum Moment = 3.0 (2,424) = 7,272 k-ft
- Associated Shear = 3.0 (17.7) = 53.1 k
- Maximum + Shear = 3.0 (38.7) = 116 k
- Associated Moment = 3.0 (2,319) = 6,957 k-ft
- Maximum – Shear = 3.0 (–36.7) = –110 k
- Associated Moment = 3.0 (1,367) = 4,101 k-ft

Live Load Group I_{PW}

- Maximum Moment = 0.73(2,424) + 1.22(6,648) = 9,880 k-ft
- Associated Shear = 0.73(17.7) + 1.22(48.4) = 72.0 k
- Maximum + Shear = 0.73(38.7) + 1.22(79.1) = 125 k
- Associated Moment = 0.73(2,319) + 1.22(4,748) = 7,485 k-ft
- Maximum – Shear = 0.73(–36.7) + 1.22(–60.4) = –100 k
- Associated Moment = 0.73(1,367) + 1.22(3,865) = 5,713 k-ft

4.10.2 Fatigue Loads (Case I Road)

HS20 (Single Truck) Over 2,000,000 Cycles

- $+LLM = 0.81(2{,}360) = 1{,}912$ k-ft
- $-LLM = 0.81(-590) = -478$ k-ft

HS20 (Multiple Lanes) 2,000,000 Cycles (Truck Load)

- $+LLM = 1.38(2{,}360) = 3{,}257$ k-ft
- $-LLM = 1.38(-590) = -814$ k-ft

HS20 (Multiple Lanes) 500,000 Cycles (Lane Load)

- $+LLM = 1.38(2{,}424) = 3{,}345$ k-ft
- $-LLM = 1.38(-805) = -1{,}111$ k-ft

P13 with HS20 100,000 Cycles

- $+LLM = 0.56(2{,}424) + 0.81(1.15)6{,}648 = 7{,}550$ k-ft
- $-LLM = 0.56(-805) + 0.81(1.15)(-2{,}219) = -2{,}518$ k-ft

4.10.3 Girder Section

Top Flange

Typically, the maximum transported length of a steel plate girder is 120 feet. Due to construction problems, some erectors limit the length of girder shipping pieces to 85 times the flange width. Based on that, for 120 foot length, the width of the compression flange will be about 18 inches, and this dimension can be used for the first trial size.

Try top flange 18" × 1"

where the thickness of the flange can be obtained from the following equation.

$$\frac{b'}{t} \leq \frac{2,200}{\sqrt{F_y}} = \frac{2,200}{\sqrt{50,000}} = 9.84 \quad \text{(10-98)}$$

$$\frac{b'}{t} = \frac{9}{1} = 9 < 9.84 \quad \text{Okay}$$

Web

Depth to Span Ratio: $\frac{D}{s} = 0.04$ ..... (10.5.1)

$D = 0.04\,(200') = 8 \text{ ft} = 96 \text{ in.}$

For initial sizing of the web the following equation can be used.

$$\frac{D}{t_w} \cong 150 \qquad t_w \cong \frac{96}{150} = 0.64 \text{ in.}$$

Try web 96" × 5/8"

Bottom Flange

Try bottom flange 18" × 1½"

Composite Concrete Slab

From Article10.38.3, the effective flange width of the slab shall not exceed:

1. ¼ span length = ¼ (150) = 37.5 ft
2. Spacing between girders = 16 ft
3. Twelve times the slab thickness = 12 (10⅞) = 131 in. ← control

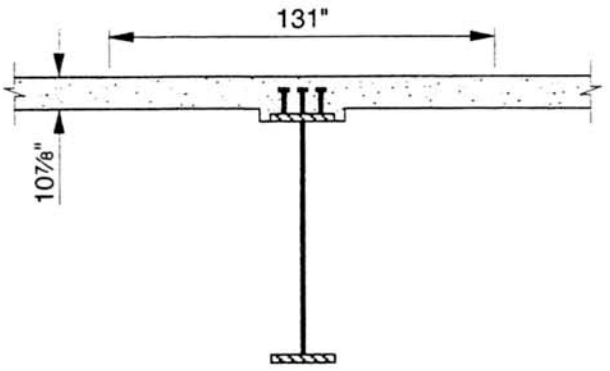

Figure 4-13 Deck Effective Width

Effective concrete area = 131 (10⅞) = 1,425 in.^{2}

For a full composite section with $f_c' = 2{,}900 - 3{,}500$ psi, $n = \dfrac{E_s}{E_c} = 9$ .....(10.38.1.3)

For a partially composite section, $n = 3(9) = 27$ .....(10.38.1.4)

Calculation of moment of inertia can be done using the composite girder worksheet or with "COMP" on IBM mainframe. Both methods are illustrated on the following pages.

STATE OF CALIFORNIA • DEPARTMENT OF TRANSPORTATION

COMPOSITE WELDED GIRDER WORKSHEET

DS-D0124 (REV. 1/91)

Job: *Example* Sheet _____ of _____

[X] Interior
[ ] Exterior
Composite Welded Girder

By: _____

Span: _____ Spacing: _____ Date: _____

Section for Slab and Girder Loads

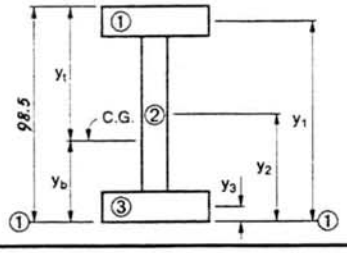

	Size		Area	y	Ay	Ay²
① Top Flange =	18 × 1.0	=	18	98	1,764	172,872
② Web =	96 × 5/8	=	60	49.5	2,970	147,015
③ Bot. Flange =	18 × 1 1/2	=	27	0.75	20.3	15.2
		ΣA =	105		4,754	319,902

$\frac{\Sigma A_y}{\Sigma A} = y_b =$ 45.3

$y_t =$ 53.2

I_{OO} Web = + 46,080

$I_{①-①}$ = 365,982

$-\bar{y}_b^2 \times \Sigma A = -$ 215,266

$I_{C.G.}$ = 150,717 in.⁴

Section for Curb Loads, Railing, Utilities (n = 27)

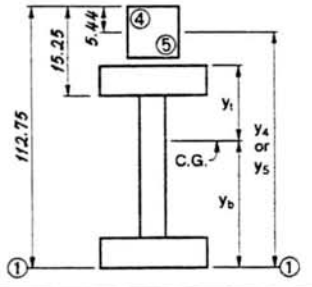

ΣA =	105			4,754	319,902
④ Concrete =	1,425 / 27 =	52.8	107.3	5,663	607,646
		157.8		10,417	927,548

$\frac{\Sigma A_y}{\Sigma A} = y_b =$ 66.0

$y_t =$ 32.5

I_{OO} Web = + 46,080

$I_{①-①}$ = 973,628

$-\bar{y}_b^2 \times \Sigma A = -$ 687,771

$I_{C.G.}$ = 285,857 in.⁴

Section for Live Loads (n = 9)

ΣA =	105			4,754	319,902
⑤ Concrete =	1,425 / 9 =	158.3	107.3	16,989	1,822,938
		263.3		21,743	2,142,840

$\frac{\Sigma A_y}{\Sigma A} = y_b =$ 82.6

$y_t =$ 15.9

I_{OO} Web = + 46,080

$I_{①-①}$ = 2,188,920

$-\bar{y}_b^2 \times \Sigma A = -$ 1,795,314

$I_{C.G.}$ = 393,606 in.⁴

Concrete Stress:

$$DL = 0.000$$

$$\text{Rail} = \frac{1,587(12)(112.75-66.0)}{285,857(27)} = 0.115$$

$$LL = \frac{9,880(12)(112.75-82.6)}{393,606(9)} = 1.009$$

1.124 ksi

< 3,250 psi Okay

Slab & Girder Loads	=	4,667 ft-k
Curb Loads	=	1,587 ft-k
Live Loads	=	9,880 ft-k

Stresses

		y_b	Bottom f_s		y_t	Top f_s
Slab & Girder Moments:	4,667 × 12 / 150,717	× 45.3	= 16.8	4,667 × 12 / 150,717	× 53.2	= 19.8
Curb Moments:	1,587 × 12 / 285,857	× 66.0	= 4.4	1,587 × 12 / 285,857	× 32.5	= 2.2
Live Load Moments:	9,880 × 12 / 393,606	× 82.6	= 24.9	9,880 × 12 / 393,606	× 15.9	= 4.8

Bottom f_s = 46.1 k/in.² < 50 ksi Top f_s = 26.8 k/in.²

Section Properties Using "COMP" on IBM Mainframe

```
*****************************************************************************************
*                                                                                       *
*                                                PF3=QUIT          PF5=PRINT            *
*        COMPOSITE GIRDER CROSS SECTION ANALYSIS/FLANGE DESIGN                          *
*   :--- SLAB --- :  BAR  :  STEEL  : ------- WED ------- : --------- FLANGE --------- :  *
*   : DIM.   EFF. :  DIM. :   BAR   : DIM.                :     TOP          BOTTOM    :  *
*   :  A     AREA :   8   :   AREA  :  Y     DEPTH    T   : WIDTH    T     WIDTH    T  :  *
*     5.4   1425.0    8.9      0.0    15.3    96.0   10.0    18.0    8.0    18.0   12.0   *
*   : ---- APPLIED MOMENTS ---- :                                                         *
*   : DEAD     CURB &     LIVE  :   N      ALLOW                                          *
*   : LOAD      RAIL      LOAD  :            FS                                           *
*     4667.0   1587.0     9880.0    9.0     50.0                                          *
*       *  *  *  *  *  *  *  *  *  *   OUTPUT   *  *  *  *  *  *  *  *  *  *              *
*   LOADS    C/I       C/I        C/I        Y              I        Q/I                  *
*           (BARS)   (TOP FL)   (BOT FL)    BAR                                           *
*   DEAD              4.237      3.605     45.3            150723                         *
*   C&R      1.583    1.359      2.766     66.0            286561   0.00761               *
*   LIVE     0.645    0.482      2.506     82.6            395505   0.00991               *
*   ------------- STEEL AREAS  ------------+-----------------  STRESS  -----------------  *
*      WEB   : ---- FLANGE ---- :  TOTAL   |                        TOP       BOTTOM      *
*            :   TOP    BOTTOM  :  GIRDER  |  LOAD        BARS     FLANGE     FLANGE      *
*      60.0      18.0    27.0       105.0  |  DEAD                   19.8      -16.8       *
*                                          |  C&R          2.5        2.2       -4.4       *
*                                          |  LIVE         6.4        4.8      -24.8       *
*                                          |  TOTAL        8.9       26.7      -46.0       *
*                                                                                       *
*      ***  RESULTS SENT TO PRINTER                                                      *
*                                                                                       *
*                                                                                       *
*                                                                                       *
*****************************************************************************************
```

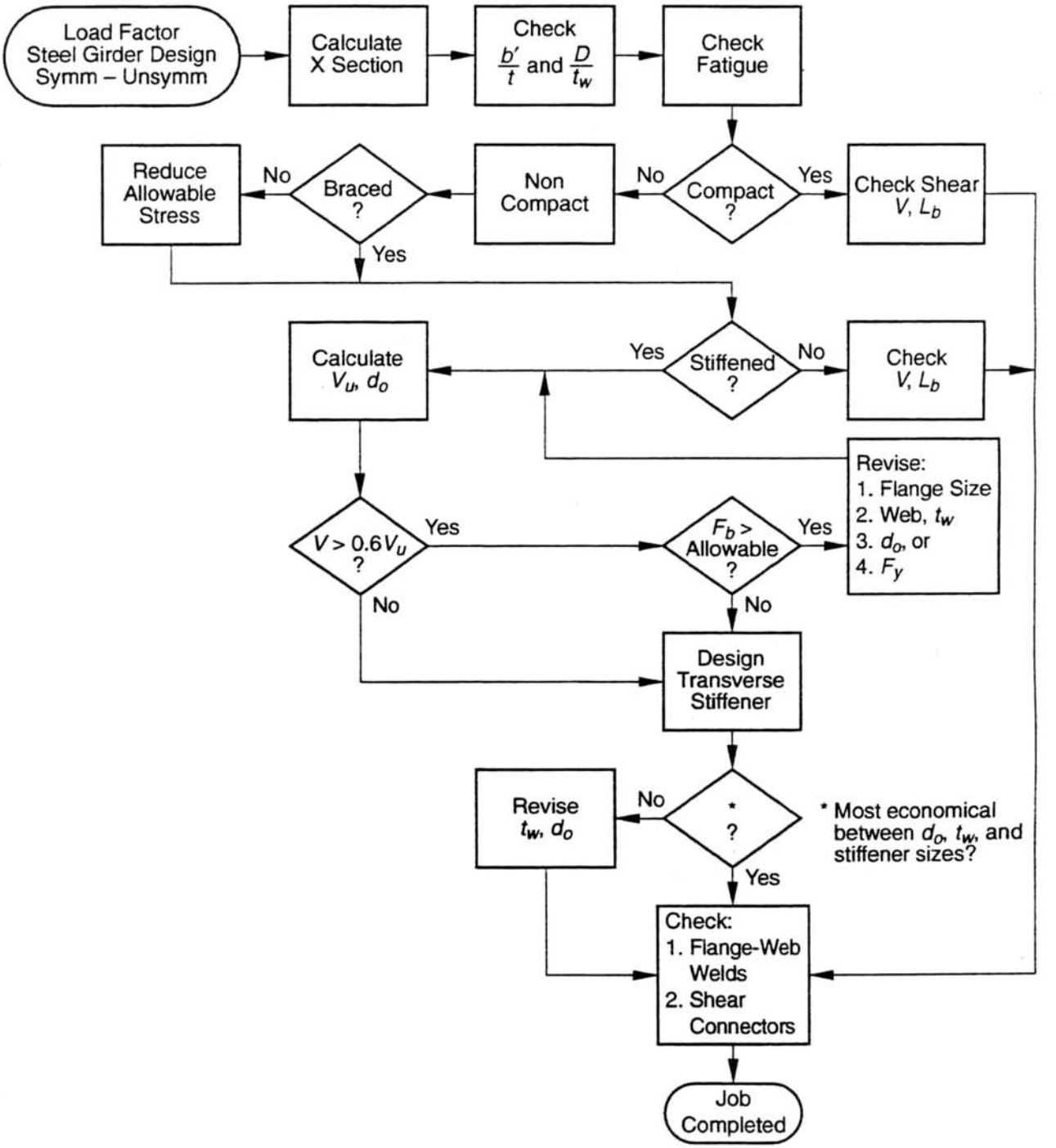

Flow Chart for Load Factor Design

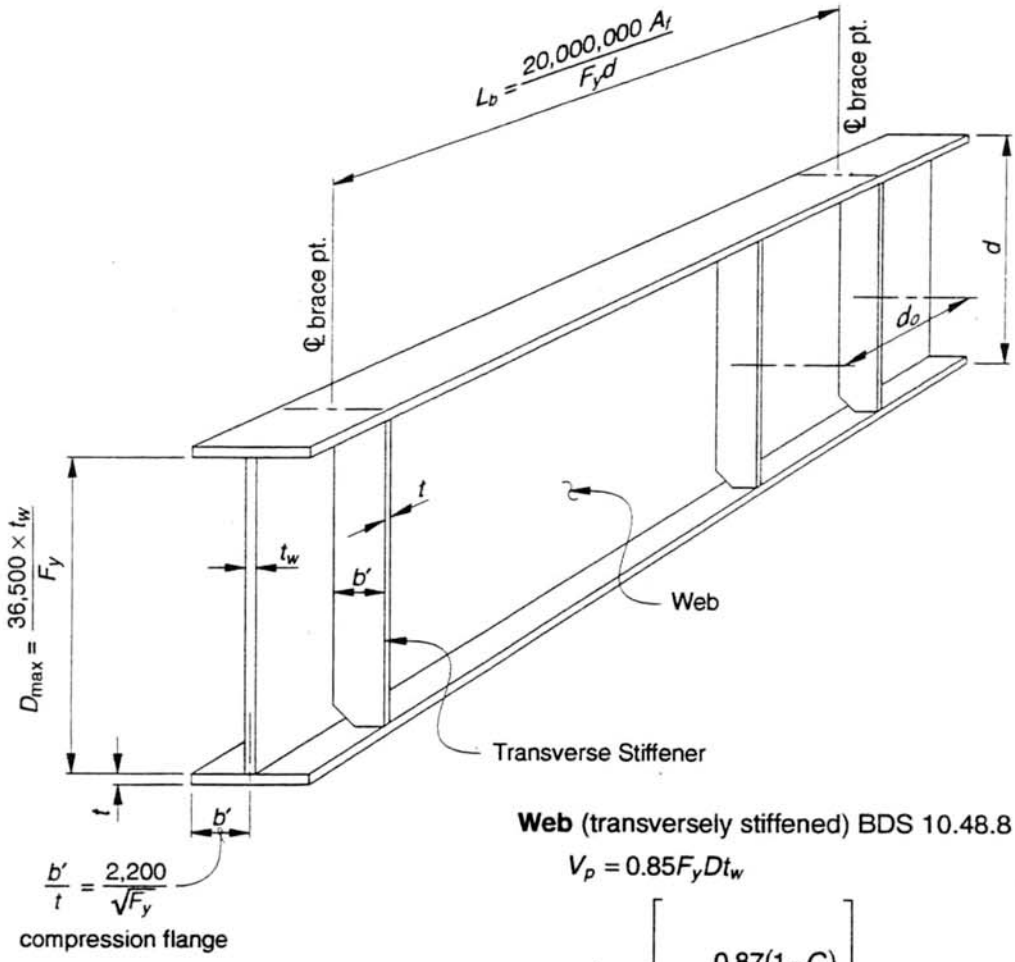

Transverse Stiffener BDS 10.48.5.3

$$\frac{b'}{t} \le \frac{2{,}600}{\sqrt{F_y}}$$

$$A = \left[0.15BDt_w(1-C)\frac{V}{V_u} - 18t_w^2\right]Y$$

$$I = d_o t_w^3 J$$

$$J = 2.5\left(\frac{D}{d_o}\right)^2 - 2 \ge 0.5$$

$$Y = \left[\frac{F_y(\text{web})}{F_y(\text{stiffener})}\right]$$

$$B = 1.0(\text{stiffener pairs})$$

Web (transversely stiffened) BDS 10.48.8

$$V_p = 0.85F_yDt_w$$

$$V_u = V_p\left[C + \frac{0.87(1-C)}{\sqrt{1+\left(\frac{d_o}{D}\right)^2}}\right]$$

if $M > 0.75M_u$

$$V = V_u\left[2.2 - 1.6\frac{M}{M_u}\right]$$

Bending

1. BDS 10.48.2
   $M_u = F_yS$
2. BDS 10.48.4
   if $L_b > \frac{20{,}000{,}000A_f}{F_yd}$

   $$M_u = F_yS\left[1 - \frac{3F_y}{4\pi^2E}\left(\frac{L_b}{b'}\right)^2\right]$$

Figure 4-14 Typical Transversely Stiffened Non-Compact Steel Section

4.10.4 Width to Thickness Ratios

Requirements for braced non-compact sections

a) Outstanding leg of compression flange, non–compact

$$\frac{b'}{t} \le \frac{2{,}200}{\sqrt{F_y}} = 9.84 \quad \text{.....(10.48.2.1)}$$

$$b' = \frac{18}{2} = 9$$

$$\frac{b'}{t} = \frac{9}{1} < 9.84 \quad \text{Okay}$$

b) web requirement for transversely stiffened girder (composite section without longitudinal stiffeners)

$$\frac{D}{t_w} \le \frac{36{,}500}{\sqrt{F_y}} = 163 \quad \text{.....(10.50(d))}$$

$$\frac{96}{(5/8)} = 154 < 163 \quad \text{Okay}$$

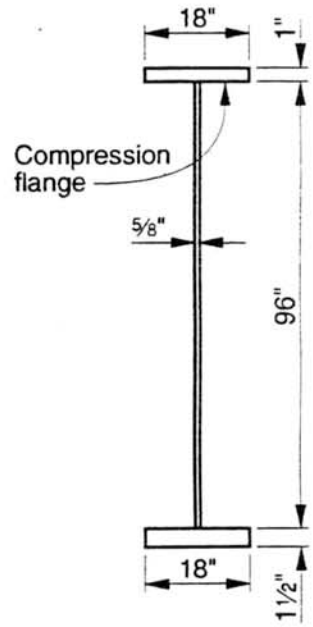

Figure 4-15
Girder Dimensions

4.10.5 Bracing Requirements

The section is a non-compact braced section. It is braced since the compression flange (top flange) is embedded in the concrete which provides a continuous lateral support. However, the stress that is induced on the compression flange from non-composite dead load should be checked because the flange is unbraced for dead load.

$$L_b \le \frac{20{,}000{,}000 A_f}{F_y d} \quad \text{.....(10-100)}$$

L_b = unbraced length

A_f = area of compression flange = 18 (1) = 18 in.^{2}

d = depth of girder = 96 + 1 + 1½ = 98.5 in.

$$L_b \le \frac{20{,}000{,}000(18)}{50{,}000(98.5)} = 73.1 \text{ in.} = 6.1 \text{ ft}$$

Since the spacing between the cross-frames will be 20 feet, the section is unbraced for non-composite dead load, and therefore, a reduction in allowable stresses is required due to buckling.

Allowable stress

$F_{cr} = 0.6\,F_y = 30$ ksi ..... (10.50(h))

or

$$F_{cr} = F_y\left[1 - \frac{3F_y}{4\pi^2 E}\left(\frac{L_b}{b'}\right)^2\right]$$

$L_b = 20\,(12) = 240$ in.

$b' = 18/2 = 9$

$F_y = 50$ ksi

$E = 29 \times 10^3$ ksi

$$F_{cr} = 50\left[1 - \frac{3(50)}{4\pi^2(29\times10^3)}\left(\frac{240}{9}\right)^2\right] = 45.3 \text{ ksi} \therefore F_{cr} = 30 \text{ ksi controls}$$

Applied *DL* stress in top flange

$f_{DL} = 19.8$ ksi ..... from page 4-33

since $F_{cr} = 30$ ksi $> f_{DL} = 19.8$ ksi, top flange bracing of 20 feet is okay.

4.10.6 Fatigue Requirements

The allowable fatigue stress ranges are dependent on (BDS Table 10.3.1A):

1. redundant or non-redundant load path structures
2. stress cycles
3. stress categories

The flow chart on page 4-39 illustrates a procedure for determining the allowable stress range F_{sr} for any fatigue detail.

If failure occurred in the interior girder, the load would be redistributed to the exterior girders and the bridge probably would not collapse. Therefore, the interior girder of this three girder system is considered redundant.

The bridge is located on a major highway with average daily truck traffic greater than 2,500. From BDS Table 10.3.2A this is a "Case I" road and the following stress cycles are to be considered:

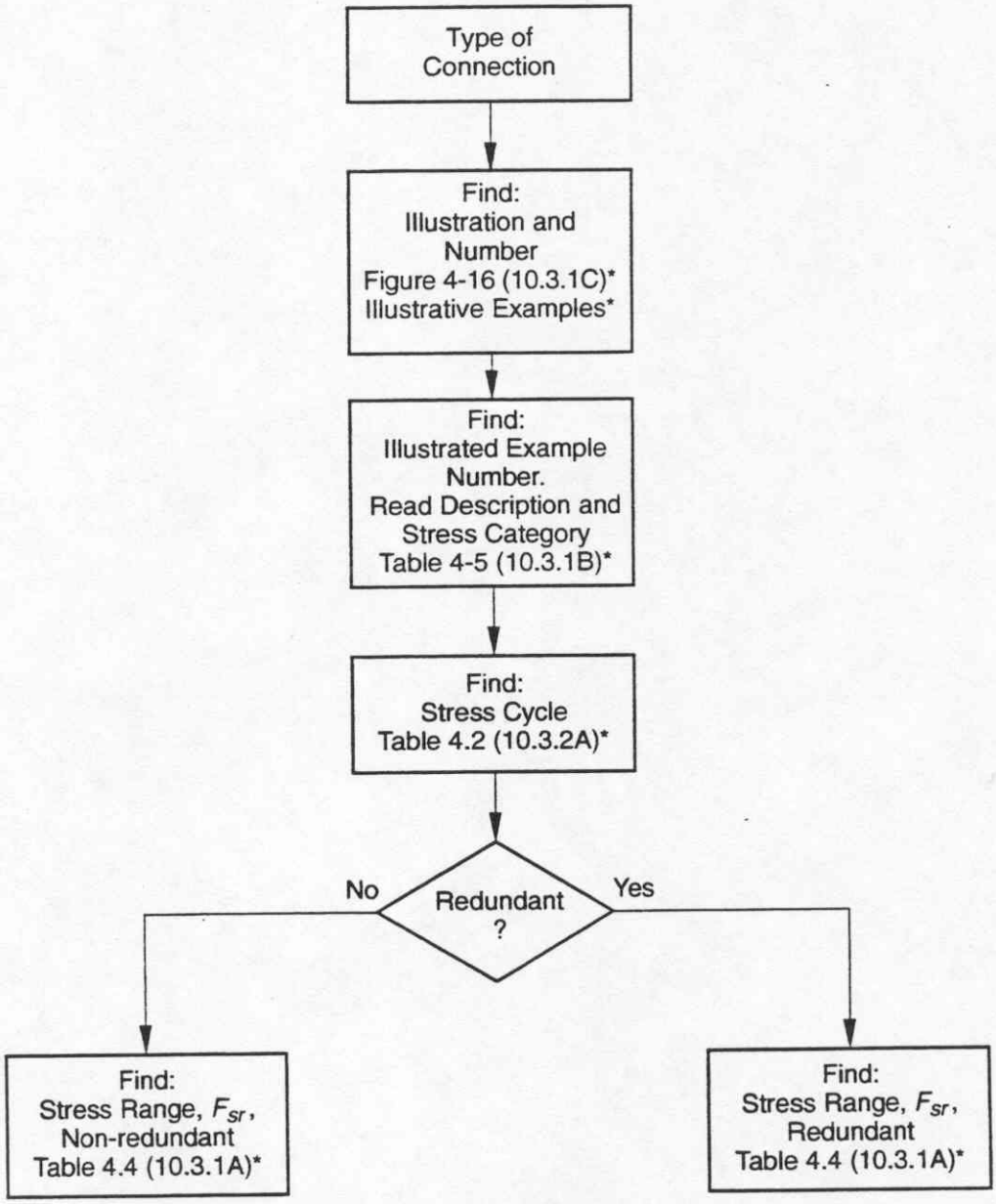

( ) Bridge Design Specifications

Flow Chart to Find Allowable Stress Range, F_{sr}

Table 4-2 Number of Cycles for Case I

Loading	Cycles
P13 with HS20	100,000
HS20 Lane Loading	500,000
HS20 Truck Loading	2,000,000
HS20 Single Truck Loading	over 2,000,000

Due to the uncertainty involved in predicting future traffic levels, it is specified that "Case I" be used for all designs. This also insures that permit vehicles are considered since P13 with HS20 (at 100,000 cycles) has a strong influence on the fatigue behavior.

The most common types of connections found in plate girders are:

1. Transverse stiffeners
2. Butt weld of flange plates
3. Gusset plates for lateral bracing
4. Flange-to-web weld

These connections and others are illustrated in Figure 4-16 (Illustrative Examples) and described in Table 4-5. Table 4-5 is used to select the category which matches the detail being considered.

The four connections listed above have been marked on Figure 4-16 and Table 4-5 and the results summarized below:

Table 4-3 Common Types of Bridge Connections

Type of Connection		Stress	Category	Illustration
1	Toe of transverse stiffeners	T or Rev.	C	6
2	Butt weld at flanges	T or Rev.	B	8, 10
3	Gusset for lateral bracing (bolt gusset to flange)	T or Rev.	B	21
4	Flange-to-web weld	Shear	F	9

The applicable stress ranges are now read from BDS Table 10.3.1A and shown below:

Table 4-4 Allowable Fatigue Stress Range

	Type of Connection	Category	Cycles			
			100,000 (Permit)	500,000 (HS20 Lane)	2,000,000 (HS20 Truck)	Over 2,000,000 (HS20 Single Truck)
1	Toe of transverse stiffeners	C	35.5 ksi	21 ksi	13 ksi	12 ksi
2	Butt weld at flanges	B	49 ksi	29 ksi	18 ksi	16 ksi
3	Gusset for lateral bracing	B	49 ksi	29 ksi	18 ksi	16 ksi
4	Flange-to-web weld	F	15 ksi	12 ksi	9 ksi	8 ksi

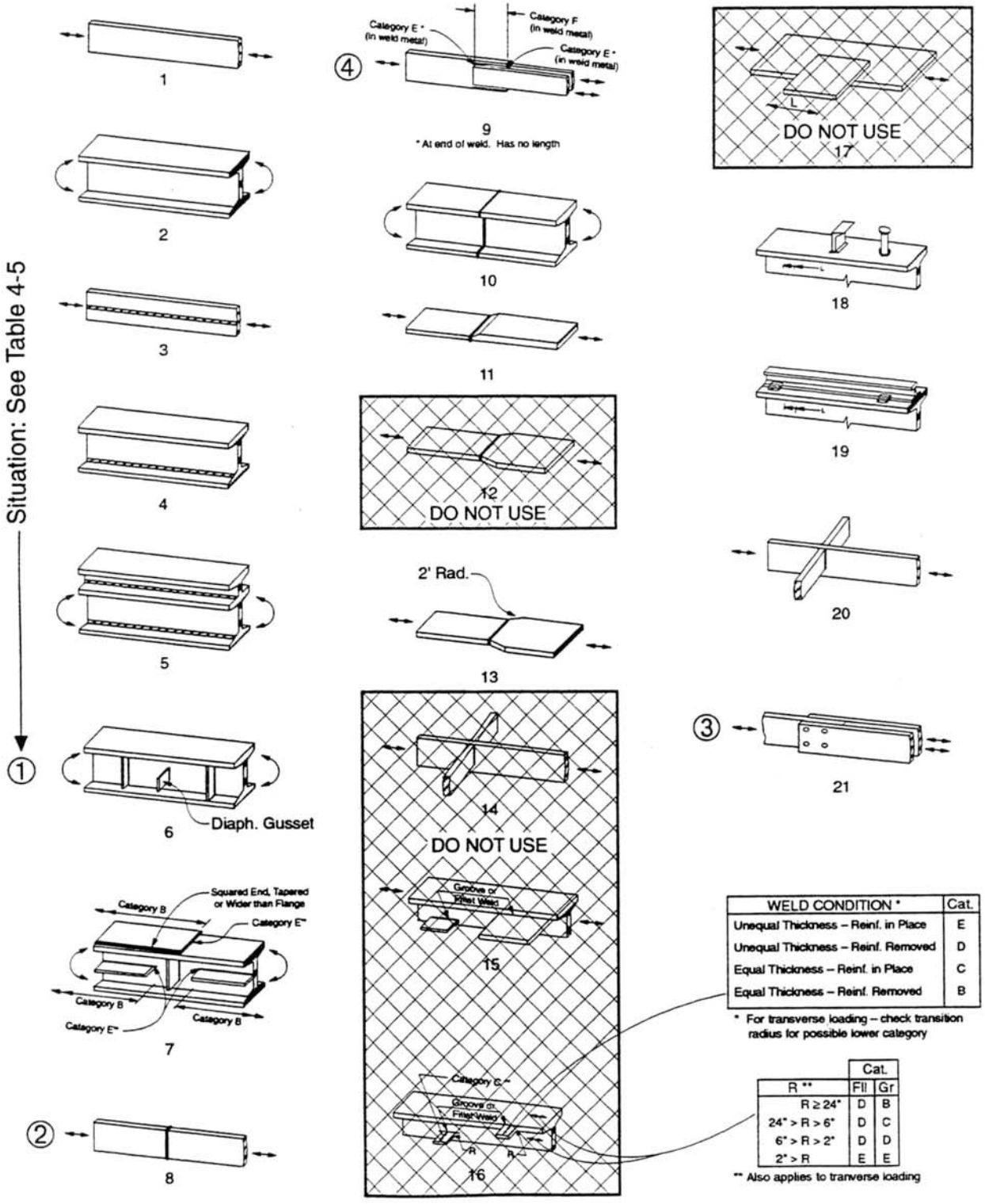

WELD CONDITION *	Cat.
Unequal Thickness – Reinf. in Place	E
Unequal Thickness – Reinf. Removed	D
Equal Thickness – Reinf. in Place	C
Equal Thickness – Reinf. Removed	B

* For transverse loading – check transition radius for possible lower category

R **	Cat. Fil	Cat. Gr
R ≥ 24"	D	B
24" > R > 6"	D	C
6" > R > 2"	D	D
2" > R	E	E

** Also applies to tranverse loading

Figure 4-16 Illustrative Examples

Table 4-5 (BDS Table 10.3.1B)

General Condition	Situation	Kind of Stress	Stress Category (See Table 10.3.1A)	Illustrative Example (See Figure 10.3.1C)	
Plain Member	Base metal with rolled or cleaned surface. Flamecut edges with ANSI smoothness of 1,000 or less.	T or Rev[a]	A	1, 2	
Built-Up Members	Base metal and weld metal in members of built-up plates or shapes. (without attachments) connected by continuous full penetration groove welds (with backing bars removed) or by continuous fillet welds parallel to the direction of applied stress.	T or Rev	B	3, 4, 5, 7	
	Base metal and weld metal in members of built-up plates or shapes (without attachments) connected by continuous full penetration groove welds with backing bars not removed, or by continuous partial penetration groove welds parallel to the direction of applied stress.	T or Rev	B′	3. 4. 5. 7	
	Calculated flexural stress at the toe of transverse stiffener welds on girder webs or flanges.	T or Rev	C	6	1
	Base metal at ends of partial length welded coverplates narrower than the flange having square or tapered ends, with or without welds across the ends, or wider than flange with welds across the ends.				
	(a) Flange thickness ≤ 0.8 in.	T or Rev	E	7	
	(b) Flange thickness > 0.8 in.	T or Rev	E′	7	
	Base metal at the ends of partial length welded coverplates wider than the flange without welds across the ends.	T or Rev	E′	7	
Groove Welded Connections	Base metal and weld metal in or adjacent to full penetration groove weld splices of rolled or welded sections having similar profiles when welds are ground flush with grinding in the direction of applied stress and weld soundness established by nondestructive inspection.	T or Rev	B	8.10	2
	Base metal and weld metal in or adjacent to full penetration groove weld splices with 2 foot radius transitions in width, when welds are ground flush with grinding in the direction of applied stress and weld soundness established by nondestructive inspection.	T or Rev	B	13	

Table 4-5 *(continued)*

General Condition	Situation	Kind of Stress	Stress Category (See Table 10.3.1A)	Illustrative Example (See Figure 10.3.1C)
	Base metal and weld metal in or adjacent to full penetration groove weld splices at transitions in width or thickness, with welds ground to provide slopes no steeper than 1 to 2½, with grinding in the direction of the applied stress, and weld soundness established by nondestructive inspection:			
	(a) AASHTO M270 Grades 100/100W(ASTM A709) base metal	T or Rev	B′	11. 12
	(b) Other base metals	T or Rev	B	11. 12
	Base metal and weld metal in or adjacent to full penetration groove weld splices, with or without transitions having slopes no greater than 1 to 2½, when the reinforcement is not removed and weld soundness is established by nondestructive inspection.	T or Rev	C	8. 10. 11. 12
Groove Welded Attachments – Longitudinally Loaded[b]	Base metal adjacent to details attached by full or partial penetration groove welds when the detail length, *L*, in the direction of stress, is less than 2 inches.	T or Rev	C	6. 15
	Base metal adjacent to details attached by full or partial penetration groove welds when the detail length, *L*, in the direction of stress, is between 2 inches and 12 times the plate thickness but less than 4 inches.	T or Rev	D	15
	Base metal adjacent to details attached by full or partial penetration groove welds when the detail length, *L*. in the direction of stress, is greater than 12 times the plate thickness or greater than 4 inches:			
	(a) Detail thickness <1.0 inches.	T or Rev	E	15
	(b) Detail thickness ≥ 1.0 inches.	T or Rev	E′	15
	Base metal adjacent to details attached by full or partial penetration groove welds with a transition radius, *R*. regardless of the detail length:			
	— With the end welds ground smooth	T or Rev		16
	(a) Transition radius ≥ 24 inches.		B	
	(b) 24 inches > Transition radius ≥ 6 inches.		C	

Table 4-5 *(continued)*

General Condition	Situation	Kind of Stress	Stress Category (See Table 10.3.1A)	Illustrative Example (See Figure 10.3.1C)
	(c) 6 inches > Transition radius ≥ 2 inches.		D	
	(d) 2 inches > Transition radius ≥ 0 inches.		E	
	— For all transition radii without end welds ground smooth.	T or Rev	E	16
Groove Welded Attachments Transversely Loaded[b,c]	Detail base metal attached by full penetration groove welds with a transition radius. *R*. regardless of the detail length and with weld soundness transverse to the direction of stress established by nondestructive inspection:			
	— With equal plate thickness and reinforcement removed.	T or Rev		16
	(a) Transition radius ≥ 24 inches.		B	
	(b) 24 inches > Transition radius ≥ 6 inches.		C	
	(c) 6 inches > Transition radius ≥ 2 inches.		D	
	(d) 2 inches > Transition radius ≥ 0 inches.		E	
	— With equal plate thickness and reinforcement not removed.	T or Rev		16
	(a) Transition radius ≥ 6 inches.		C	
	(b) 6 inches > Transition radius ≥ 2 inches.			
	(c) 2 inches > Transition radius ≥ 0 inches.		E	
	— With unequal plate thickness and reinforcement removed.	T or Rev		16
	(a) Transition radius ≥ 2 inches.	D		
	(b) 2 inches > Transition radius ≥ 0 inches.	E		
	— For all transition radii with unequal plate thickness and reinforcement not removed.	T or Rev	E	16
Fillet Welded Connections	Base metal at details connected with transversely loaded welds, with the welds perpendicular to the direction of stress:			
	(a) Detail thickness ≤ 0.5 inches.	T or Rev	C	14
	(b) Detail thickness > 0.5 inches.	T or Rev	See Note d	
	Base metal at intermittent fillet welds.	T or Rev	E	—
	Shear stress on throat of fillet welds.	Shear	F	9

4

Table 4-5 *(continued)*

General Condition	Situation	Kind of Stress	Stress Category (See Table 10.3.1A)	Illustrative Example (See Figure 10.3.1C)
Fillet Welded Attachments—Longitudinally Loaded [b,c,e]	Base metal adjacent to details attached by fillet welds length, *L*. in the direction of stress, is less than 2 inches and stud-type shear connectors.	T or Rev	C	15. 17. 18. 20
	Base metal adjacent to details attached by fillet welds with length, *L*. in the direction of stress, between 2 inches and 12 times the plate thickness but less than 4 inches.	T or Rev	D	15. 17
	Base metal adjacent to details attached by fillet welds with length. *L*. in the direction of stress greater than 12 times the plate thickness or greater than 4 inches:			
	(a) Detail thickness < 1.0 inch.	T or Rev	E	7. 9. 15. 17
	(b) Detail thickness ≥ 1.0 inch.	T or Rev	E′	7. 9. 15
	Base metal adjacent to details attached by fillet welds with a transition radius. *R*. regardless of the detail length:			
	— With the end welds ground smooth	T or Rev		16
	(a) Transition radius ≥ 2 inches.		D	
	(b) 2 inches > Transition radius ≥ 0 inch.		E	
	— For all transition radii without the end welds ground smooth.	T or Rev	E	16
Fillet Welded Attachments – Transversely Loaded with the weld in the direction of principal stress [b,c]	Detail base metal attached by fillet welds with a transition radius. *R*. regardless of the detail length (shear stress on the throat of fillet welds governed by Category F):			
	— With the end welds ground smooth	T or Rev		16
	(a) Transition radius ≥ 2 inches.		D	
	(b) 2 inches > Transition radius ≥ 0 inch.		E	
	— For all transition radii without the end welds ground smooth.	T or Rev	E	16

Table 4-5 *(continued)*

General Condition	Situation	Kind of Stress	Stress Category (See Table 10.3.1A)	Illustrative Example (See Figure 10.3.1C)
Mechanically Fastened Connections	Base metal at gross section of high strength bolted slip resistant connections, except axially loaded joints which induce out-of-plane bending in connecting materials.	T or Rev	B	21
	Base metal at net section of high strength bolted bearing-type connections.	T or Rev	B	21
	Base metal at net section of riveted connections.	T or Rev	D	21

[a] "T" signifies range in tensile stress only. "Rev" signifies a range of stress involving both tension and compression during a stress cycle.

[b] "Longitudinally Loaded" signifies direction of applied stress is parallel to the longitudinal axis of the weld. "Transversely Loaded" signifies direction of applied stress is perpendicular to the longitudinal axis of the weld.

[c] Transversely loaded partial penetration groove welds are prohibited.

[d] Allowable fatigue stress range on throat of fillet welds transversely loaded is a function of the effective throat and plate thickness. (See Frank and Fisher, Journal of the Structural Division, ASCE. Vol. 105. No. ST9. Sept. 1979.)

$$S_r = S_r^c \left(\frac{0.06 + 0.79 \frac{H}{t_p}}{1.1 t_p^{\frac{1}{6}}} \right)$$

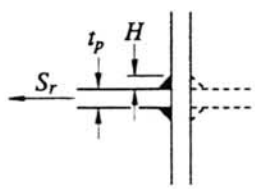

where S_r^c is equal to the allowable stress range for Category C given in Table 10.3.1A. This assumes no penetration at the weld root.

[e] Gusset plates attached to girder flange surfaces with only transverse fillet welds are prohibited.

4.10.6.1 Applied and Allowable Stress Ranges

1. HS20 (Multiple Lanes) 2,000,000 cycles (Truck)

   $+LLM = 3{,}257$ k-ft

   $-LLM = -814$ k-ft

   $$\text{Stress range} = \frac{3{,}257(12)}{393{,}606}(82.6) + \frac{814(12)}{150{,}717}(45.3)$$

   $$= 8.20 + 2.94 = 11.1 \text{ ksi} < 13 \text{ ksi} < 18 \text{ ksi} \quad \text{Okay for Category B and C}$$

2. HS20 (Multiple Lanes) 500,000 (Lane Load)

   $+LLM = 3{,}345$ k-ft

   $-LLM = -1{,}111$ k-ft

   $$\text{Stress range} = \frac{3{,}345(12)}{393{,}606}(82.6) + \frac{1{,}111(12)}{150{,}717}(45.3)$$

   $$= 8.42 + 4.01 = 12.4 \text{ ksi} < 21 \text{ ksi} < 29 \text{ ksi} \quad \text{Okay for Category B and C}$$

3. P13 with HS20 100,000 cycles

   $+LLM = 7{,}550$ k-ft

   $-LLM = -2{,}518$ k-ft

   $$\text{Stress range} = \frac{7{,}550(12)}{393{,}606}(82.6) + \frac{2{,}518(12)}{150{,}717}(45.3)$$

   $$= 19.01 + 9.08 = 28.1 \text{ ksi} < 35.5 \text{ ksi} < 49 \text{ ksi} \quad \text{Okay for Category B and C}$$

4. Single HS20 over 2,000,000 cycles (Truck)

   $+LLM = 1{,}912$ k-ft

   $-LLM = -478$ k-ft

   $$\text{Stress range} = \frac{1{,}912(12)}{393{,}606}(82.6) + \frac{478(12)}{150{,}717}(45.3)$$

   $$= 4.81 + 1.72 = 6.5 \text{ ksi} < 12 \text{ ksi} < 16 \text{ ksi} \quad \text{Okay for Category B and C}$$

Calculations for flange-to-web weld (Category F) are not shown, see page 4-63 for procedure.

4.10.7 Shear Design

The shear capacity, V_u, of the section is dependent on the yield strength and thickness of the web and the spacing of the transverse stiffener as

$$V_u = V_p\left[C + \frac{0.87(1-C)}{\sqrt{1+\left(\frac{d_o}{D}\right)^2}}\right] \quad \text{(10-113)}$$

where:

V_p = plastic shear capacity

$= 0.58F_yDt_w$ ..... (10-114)

$= 0.58(50)\ 96\ (^5/_8) = 1{,}740$ k

C = ratio of buckling shear stress to shear yield stress

The stiffeners are usually spaced equally between cross frames up to a maximum of $3D$ as specified in BDS Article 10.48.8.3.

Maximum $d_o = 3(96) = 288$ inches

Try $d_o = 20$ feet = 240 inches = spacing between cross-frames

$$k = \text{buckling coefficient} = 5 + \frac{5}{\left(\frac{d_o}{D}\right)^2} = 5 + \frac{5}{\left(\frac{240}{96}\right)^2} = 5.8$$

$$\frac{6{,}000\sqrt{k}}{\sqrt{F_y}} = \frac{6{,}000\sqrt{5.8}}{\sqrt{50{,}000}} = 64.6 \text{ and } \frac{7{,}500\sqrt{k}}{\sqrt{F_y}} = \frac{7{,}500\sqrt{5.8}}{\sqrt{50{,}000}} = 80.8$$

$$\frac{D}{t_w} = \frac{96}{5/8} = 154 > \frac{7{,}500\sqrt{k}}{\sqrt{F_y}} = 80.8$$

$$\therefore C = \frac{4.5\times10^7 k}{\left(\frac{D}{t_w}\right)^2 F_y} = \frac{4.5\times10^7(5.8)}{\left(\frac{96}{5/8}\right)^2 50{,}000} = 0.22 \quad \text{(10-116)}$$

$$V_u = 1,740\left[0.22 + \frac{0.87(1-0.22)}{\sqrt{1+\left(\frac{240}{96}\right)^2}}\right] = 821\,k$$

Applied Shear = V_{max} = –19.8 – 6.8 – 110 = – 137 k

V_{max} = 137 k < V_u = 821 k Okay

Check requirements for handling

$$\frac{D}{t_w} = \frac{96}{5/8} = 153.6 > 150 \quad \text{(10.48.8.3)}$$

$$\therefore d_o \le D\left(\frac{260}{D/t_w}\right)^2 = 96\left(\frac{260}{153.6}\right)^2 = 275 \text{ inches}$$

d_o = 240 inches ≤ 275 inches Okay

Spacing of transverse stiffeners and cross-frames is 20 feet.

As might be expected due to low shear demands at the 0.4 point, only minimal stiffeners are required. However, as the design check moves closer to the supports, where the shear is higher, the spacing of the stiffeners may become much closer.

4.10.7.1 Moment and Shear Interaction

Moment – shear interaction ..... (10.48.8.2)

If $M > 0.75\,M_u$ then a reduction in the allowable shear, V, must be made.

Let $M = M_u$

$$\frac{V}{V_u} = 2.2 - 1.6\frac{M}{M_u} = 2.2 - 1.6 = 0.6 \quad \text{(10-117)}$$

$\therefore\ V = 0.6Vu = 0.6(821) = 493$ k

V_{max} = 137 k < 493 k Okay

4.10.7.2 Transverse Stiffener Design

Moment of inertia required:

$$I = d_o t_w^3 J \quad \text{(10-106)}$$

where:

$$J = 2.5\left(\frac{D}{d_o}\right)^2 - 2 \geq 0.5 \quad \text{(10-107)}$$

$$= 2.5\left(\frac{96}{240}\right)^2 - 2 = -1.60 \quad \text{use J} = 0.5$$

$$I_{\text{req'd}} = 240\left(\frac{5}{8}\right)^3 0.5 = 29.3 \text{ in.}^4$$

Area required:

$$A = \left[0.15BDt_w(1-C)\frac{V}{V_u} - 18t_w^2\right]Y$$

where:

Y = Ratio of web plate yield to stiffener yield

$= \frac{50}{36} = 1.39$

B = 1.0 for stiffener pairs

$$A = \left[0.15(1.0)96\left(\frac{5}{8}\right)(1-0.22)\frac{137}{821} - 18\left(\frac{5}{8}\right)^2\right]1.39$$

$= -8.15 < 0$

Since area required < 0, then the transverse stiffener must meet only the moment of inertia requirement (10-106) and the width-to-thickness ratio:

$$\frac{b'}{t} \leq \frac{2{,}600}{\sqrt{F_y}} \quad \text{(10-104)}$$

The width of stiffener is preferred to be at least 6 inches to allow adequate space for cross-frame connection.

$$\frac{b'}{t} \le \frac{2{,}600}{\sqrt{36{,}000}} = 13.7$$

$$\text{Let } b' = 6 \quad t_{\min} = \frac{6}{13.7} = 0.44 \text{ inch}$$

Try 6" × ½" stiffeners

$$\frac{b'}{t} = \frac{6}{\frac{1}{2}} = 12 < 13.7 \quad \text{Okay}$$

$$I = \frac{\frac{1}{2}(6.31)^3}{3}(2)$$

$$= 83.7 \text{ in.}^4 > I_{\text{req'd}} = 29.3 \text{ in.}^4 \quad \text{Okay}$$

Use 6" × ½" stiffeners

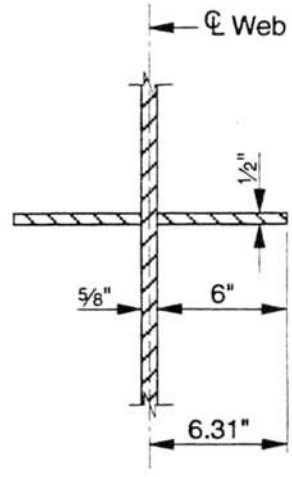

Figure 4-17
Web and Stiffener Cross Section

4.11 Non-Composite Section Design

This section illustrates the design of non-composite section at Pier 2.

4.11.1 Design Loads *(See Section 4-16, Bridge Design System Computer Output)*

Dead Load Girder and Slab

Moment	= 1.3 (–7,899)	= –10,269 k-ft
Shear	= 1.3 (250)	= 325 k

Dead Load Rail and AC Overlay

Moment	= 1.3 (–2,686)	= –3,492 k-ft
Shear	= 1.3 (85)	= 111 k

Live Loads

1. Live Load Group I_H

Maximum moment	= 3.0(–3,292)	= –9,876 k-ft
Associated shear	= 3.0(94.9)	= 285 k
Maximum shear	= 3.0(110)	= 330 k
Associated moment	= 3.0(–2,634)	= –7,902 k-ft

2. Live Load Group I_{pw}

Maximum moment	= 0.73(–3,292) + 1.22(–5,548)	= –9,172 k-ft
Associated shear	= 0.73(94.9) + 1.22(217)	= 334 k
Maximum shear	= 0.73(110) + 1.22(279)	= 421 k
Associated moment	= 0.73(–2,634) + 1.22(4,569)	= –7,497 k-ft

Fatigue Loads (Case I Road)

1. HS20 (single truck) over 2,000,000 cycles

+*LLM*	= 0.81(322)	= 261 k–ft
–*LLM*	= 0.81(–1,476)	= –1,196 k-ft

2. HS20 (Multiple Lanes) 2,000,000 cycles (truck)

+*LLM*	= 1.38(322)	= 444 k-ft
–*LLM*	= 1.38(–1,476)	= –2,037 k-ft

3. HS20 (Multiple Lanes) 500,000 cycles (Lane)

+*LLM*	= 1.38(365)	= 504 k-ft
–*LLM*	= 1.38(-3,292)	= –4,543 k-ft

4. P13 with HS20 100,000 cycles

+*LLM*	= 0.56(365) + 1.15 (0.81) 1,110	= 1,238 k-ft
–*LLM*	= 0.56(–3,292) + (1.15) 0.81 (–5,548)	= –7,011 k-ft

4.11.2 Girder Section

The section over the pier is designed as a non-composite section. It is Caltrans policy to minimize the use of shear connectors in negative moment areas to minimize welding on the tension flange.

One method of minimizing the welding on the tension flange is to add additional studs near the *DL* point of contraflexure and additional reinforcement is placed in the concrete deck over the pier to control cracking in the deck. Reference can be made to BDS Article 10.38.4.3 regarding minimum deck reinforcement in negative moment regions.

Another method would be to use shear connectors at the maximum spacing of 24 inches through the negative moment area.

A symmetrical steel section will be used.

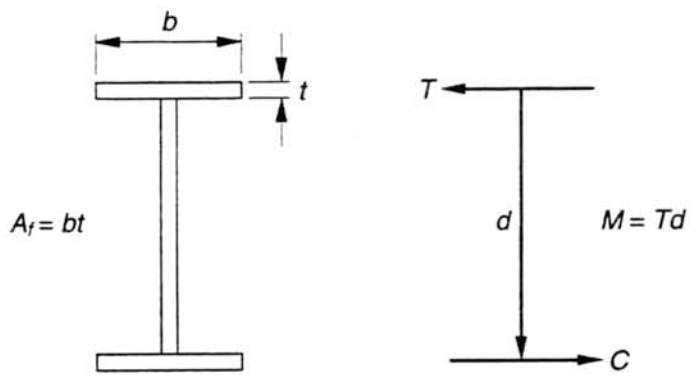

Figure 4-18 Equilibrium of Forces

By equilibrium $T = C = F_y A_f$

Design Moment $Td = F_y A_f d$

Design Moment: Girder + Slab = – 10,269 k-ft
Rail + AC = – 3,492 k-ft
Live Load = – 9,876 k-ft $M_{applied}$ = 23,637 k-ft
– 23,637 k-ft

Distance between c.g. of the flanges $d = 96 + 2 = 98$ inches ± (assuming 2-inch thick flanges)

To make the fabrication of the plate girder easier, the web depth should remain constant throughout the length of girder. The depth of the web ($D = 96$") is the same as used in the composite area.

$$T = \frac{M}{D} = \frac{23{,}637(12)}{98} = 2{,}894 \text{ k}$$

$$F_y = 50 \text{ ksi}$$

$$A_f = \frac{2{,}894}{50} = 57.9 \text{ in}^2$$

Let $b = 18$ inches, $t = \dfrac{57.9}{18} = 3.2$ inches

Try: 18" × 2⅞" flanges and 96" × ⅝" web

$$I = 2A_f\left(\frac{D}{2}+\frac{t}{2}\right)^2 + I_{o-o_{web}}$$

$$= 2(18)(2\tfrac{7}{8})\left(\frac{96}{2}+\frac{2\tfrac{7}{8}}{2}\right)^2 + \frac{1}{12}\left(\frac{5}{8}\right)(96)^3 = 252{,}961 + 46{,}080 = 299{,}041 \text{ in}^4$$

$$Y_t = Y_b = \frac{96}{2} + 2\tfrac{7}{8} = 50.9 \text{ inches}$$

$$f_b = \frac{Mc}{I} = \frac{23{,}637(50.9)12}{299{,}041} = 48.3 \text{ ksi}$$

$f_b = 48.3$ ksi < 50 ksi Okay

4.11.3 Width to Thickness Ratios

a) Outstanding leg of compression flange — non–compact

$$\frac{b'}{t} \le \frac{2{,}200}{\sqrt{F_y}} = 9.84 \quad \text{(10.48.2.1)}$$

$$\frac{b'}{t} = \frac{9}{2\tfrac{7}{8}} = 3.13 < 9.84 \quad \text{Okay}$$

b) Web — transversely stiffened girder

$$\frac{D}{t_w} \le \frac{36{,}500}{\sqrt{F_y}} = 163 \quad \text{(10-103)}$$

$$\frac{96}{\tfrac{5}{8}} = 154 < 163 \quad \text{Okay}$$

4.11.4 Bracing Requirements

$$L_b \leq \frac{20{,}000{,}000}{F_y d} A_f \quad \text{(10-100)}$$

A_f = Area of compression flange
= $18(2\frac{7}{8}) = 51.8$

d = $96 + 2(2\frac{7}{8}) = 101.8$

$$L_b \leq \frac{20{,}000{,}000(51.8)}{50{,}000(101.8)} = 203.5 \text{ inches} = 17 \text{ feet}$$

Let spacing between cross-frames be 15 feet, and no moment reduction due to bracing will be required.

4.11.5 Fatigue Requirements

1. HS20 (Multiple Lanes) 2,000,000 cycles (Truck Load)

   $$\text{Stress range} = \frac{(444 + 2{,}037)50.9}{299{,}041}(12) = 5.07 \text{ ksi} < 13 \text{ ksi} < 18 \text{ ksi}$$

   Okay for Category B and C

2. HS20 (Multiple Lanes) 500,000 cycles (Lane Load)

   $$\text{Stress range} = \frac{(504 + 4{,}543)50.9}{299{,}041}(12) = 10.3 \text{ ksi} < 21 \text{ ksi} < 29 \text{ ksi}$$

   Okay for Category B and C

3. P13 with HS20 100,000 cycles

   $$\text{Stress range} = \frac{(1{,}238 + 7{,}011)50.9}{299{,}041}(12) = 16.8\text{ksi} < 35.5 \text{ ksi} < 49 \text{ ksi}$$

   Okay for Category B and C

4. HS20 (Single Truck) over 2,000,000 cycles

   $$\text{Stress range} = \frac{(261 + 1{,}196)50.9}{299{,}041}(12) = 3.0 \text{ ksi} < 12 \text{ ksi} < 16 \text{ ksi}$$

   Okay for Category B and C

Calculations for flange-to-web weld (Category F) are shown on page 4-63.

4.11.6 Shear Design

Maximum Shear capacity, V_u

$$V_u = V_p\left[C + \frac{0.87(1-C)}{\sqrt{1+\left(\frac{d_o}{D}\right)^2}}\right] \quad \text{(10-113)}$$

where $V_p = 0.58F_yDt_w$ ..... (10-114)

$= 0.58\ (50)\ 96\ (5/8) = 1{,}740$ k

where d_o = spacing between transverse stiffeners

maximum $d_o = 3D = 3(96) = 288$ in., or for handling $= 96\left(\frac{260}{153.6}\right)^2 = 275$ in.

try $d_o = 15$ ft $= 180$ in. = spacing between cross-frames

$$k = 5 + \frac{5}{\left(\frac{d_o}{D}\right)^2} = 5 + \frac{5}{\left(\frac{180}{96}\right)^2} = 6.42$$

$$\frac{6{,}000\sqrt{k}}{\sqrt{F_y}} = \frac{6{,}000\sqrt{6.42}}{\sqrt{50{,}000}} = 68 \text{ and } \frac{7{,}500\sqrt{k}}{\sqrt{F_y}} = \frac{7{,}500\sqrt{6.42}}{\sqrt{50{,}000}} = 85$$

$$\frac{D}{t_w} = \frac{96}{5/8} = 154 > \frac{7{,}500\sqrt{k}}{\sqrt{F_y}} = 85$$

$$\therefore C = \frac{(4.5)10^7 k}{\left(\frac{D}{t_w}\right)^2 F_y} = \frac{(4.5)(10^7)6.42}{\left(\frac{96}{5/8}\right)^2 50{,}000} = 0.24 \quad \text{(10-116)}$$

$$V_u = 1{,}740\left[0.24 + \frac{0.87(1-0.24)}{\sqrt{1+\left(\frac{180}{96}\right)^2}}\right] = 959 \text{ k}$$

Design $V = 325 + 111 + 421 = 857$ k

Since Design $V = 857$ k $< V_u = 959$ k, spacing of transverse stiffeners, $d_o = 15$ ft, is okay.

4.11.6.1 Moment and Shear Interaction

1. Maximum Shear – Associated Moment

$V_{applied} = 857$ k

$M_{applied} = -10{,}269 - 3.492 - 7{,}497 = -21{,}258$ k-ft

$$M_u = F_y S = F_y\left(\frac{I}{c}\right) = (50)\frac{299{,}041}{50.9}\left(\frac{1}{12}\right) = 24{,}479 \text{ k-ft}$$

$0.75\,M_u = 0.75\,(24{,}479) = 18{,}360$ k-ft

Since $M = 21{,}258$ k-ft $> 0.75\,M_u = 18{,}360$ k-ft, a reduction in the allowable shear, V, must be made.

$$\frac{V}{V_u} = 2.2 - 1.6\frac{M}{M_u} = 2.2 - 1.6\left(\frac{21{,}258}{24{,}479}\right) = 0.81$$

$V = V_u(0.81) = 959\,(0.81) = 777$ k

Since applied $V = 857$ k > allowable $V = 777$ k N.G. The section must be revised.

The section can be revised by one or more of the following:

1. Increase flange size.
2. Increase web thickness.
3. Reduce stiffener spacing, d_o.

   Try reducing stiffener spacing, $d_o = 90$ in.

$$k = 5 + \frac{5}{\left(\frac{d_o}{D}\right)^2} = 5 + \frac{5}{\left(\frac{90}{96}\right)^2} = 10.69$$

$$\frac{7{,}500\sqrt{k}}{\sqrt{F_y}} = \frac{7{,}500\sqrt{10.69}}{\sqrt{50{,}000}} = 110$$

$$\frac{D}{t_w} = \frac{96}{5/8} = 154 > \frac{7{,}500\sqrt{k}}{\sqrt{F_y}} = 110$$

$$\therefore C = \frac{4.5(10^7)k}{\left(\frac{D}{t_w}\right)^2 F_y} = \frac{4.5(10^7)(10.69)}{\left(\frac{96}{5/8}\right)^2 50{,}000} = 0.41$$

$$V_u = V_p\left[C + \frac{0.87(1-C)}{\sqrt{1+\left(\frac{d_o}{D}\right)^2}}\right] \quad \text{(10-113)}$$

$$= 1{,}740\left[0.41 + \frac{0.87(1-0.41)}{\sqrt{1+\left(\frac{90}{96}\right)^2}}\right] = 1{,}365 \text{ k}$$

allowable $V = 0.81 V_u = 0.81\ (1{,}365) = 1{,}105$ k

applied $V = 857$ k < allowable $V = 1{,}105$ k Okay

If web size were increased, $t_w = 3/4$ in., and the stiffener spacing remained the same $d_o = 180$ in.

$$V_u = V_p\left[C + \frac{0.87(1-C)}{\sqrt{1+\left(\frac{d_o}{D}\right)^2}}\right] \quad \text{(10-113)}$$

$V_p = 0.58\ F_y D\ t_w = 0.58\ (50)\ 96\ (3/4) = 2{,}088$ k

$k = 6.42$ as before

$$\frac{7{,}500\sqrt{k}}{\sqrt{F_y}} = 85 < \frac{D}{t_w} = \frac{96}{3/4} = 128$$

$$\therefore C = \frac{4.5\times10^7 k}{\left(\frac{D}{t_w}\right)^2 F_y} = \frac{4.5\times10^7(6.42)}{\left(\frac{96}{3/4}\right)^2 50{,}000} = 0.35$$

$$V_u = 2{,}088\left[0.35 + \frac{0.87(1-0.35)}{\sqrt{1+\left(\frac{180}{96}\right)^2}}\right] = 1{,}286 \text{ k}$$

$$I = 2A_f\left(\frac{D}{2}+\frac{t}{2}\right)^2 + I_{0-0\text{web}}$$

$$= 2(18)(2\,7/8)\left(\frac{96}{2}+\frac{2\,7/8}{2}\right)+\frac{1}{12}\left(\frac{3}{4}\right)(96)^3 = 308,257 \text{ in.}^4$$

$$M_u = \frac{F_y I}{c} = (50)\frac{308,257}{50.9(12)} = 25,234 \text{ k-ft}$$

$0.75\,M_u = 18,925$ k-ft $< M = 21,258$ k-ft

$$\frac{V}{V_u} = 2.2 - 1.6\frac{M}{M_u} = 2.2 - 1.6\left(\frac{21,258}{25,234}\right) = 0.85$$

$V = 0.85V_u = 0.85(1,286) = 1,093$ k

applied $V = 857$ k < allowable $V = 1,093$ k Okay

So either reduce spacing between transverse stiffeners, $d_o = 90$ in., or increase the size of the web, $t_w = 3/4$ in.

For this example use:

$t_w = 3/4$ in. and $d_o = 180$ in.

2. Maximum moment – associated shear

a) I_H Group

$M = -10,269 - 3,492 - 9,876 = -23,637$ k-ft

$V = 325 + 111 + 285 = 721$ k

$M_u = 25,234$ k-ft

$0.75M_u = 18,925$ k-ft $< M = 23,637$ k-ft

$$\therefore \frac{V}{V_u} = 2.2 - 1.6\frac{M}{M_u} = 2.2 - 1.6\left(\frac{23,637}{25,234}\right) = 0.70$$

$V = 0.70V_u = 0.70(1,286) = 900$ k

applied $V = 721$ k < allowable $V = 900$ k Okay

b) I_{PW} Group

$M = -10{,}269 - 3{,}492 - 9{,}172 = -22{,}933$ k-ft

$V = 325 + 111 + 334 = 770$ k

$M_u = 25{,}234$ k-ft

$0.75\,M_u = 18{,}925$ k-ft $< M = 22{,}933$ k-ft

$$\therefore \frac{V}{V_u} = 2.2 - 1.6\frac{M}{M_u} = 2.2 - 1.6\left(\frac{22{,}933}{25{,}234}\right) = 0.75$$

$V = 0.75V_u = 0.75(1{,}286) = 964$ k

applied $V = 770$ k < allowable $V = 964$ k Okay

4.11.6.2 Transverse Stiffener Design

Moment of inertia required:

$$I = d_o t_w^3 J \quad \text{(10-106)}$$

Where:

$$J = 2.5\left(\frac{D}{d_o}\right)^2 - 2 \geq 0.5$$

$$= 2.5\left(\frac{96}{180}\right)^2 - 2 = -1.289$$

Use:

$$J = 0.5$$

$$I_{\text{req'd}} = 180\left(\frac{3}{4}\right)^3(0.5) = 38.0 \text{ in}^4$$

Area Required:

$$A = \left[0.15BDt_w(1-C)\left(\frac{V}{V_u}\right) - 18t_w^2\right]Y \quad \text{(10-105)}$$

Where:

$Y =$ Ratio of web plate yield to stiffener yield

$$= \frac{50}{36} = 1.39$$

$B =$ 1.0 for stiffener pairs

$$A = \left[0.15(1.0)96\left(\frac{3}{4}\right)(1-0.35)\frac{857}{1{,}286} - 18\left(\frac{3}{4}\right)^2\right]1.39$$

$$= -7.57 < 0$$

Since area required < 0, then the transverse stiffener must meet only the moment of inertia requirement (10-106) and the width to thickness ratio:

$$\frac{b'}{t} \le \frac{2{,}600}{\sqrt{F_y}} \quad \text{(10-104)}$$

$$\frac{b'}{t} \le \frac{2{,}600}{\sqrt{36{,}000}} = 13.7$$

Let $b' = 6$ in. $\quad t_{\min} = \frac{6}{13.7} = 0.44$ in.

Try 6" × ½" Stiffeners

$$\frac{b'}{t} = \frac{6}{1/2} = 12 < 13.7 \quad \text{Okay}$$

$$I = \frac{1/2\,(6.38)^3}{3}(2)$$

$$= 86.6 \text{ in.}^4 > I_{req'd} = 38.0 \text{ in.}^4$$

Use 6" × ½" Stiffeners

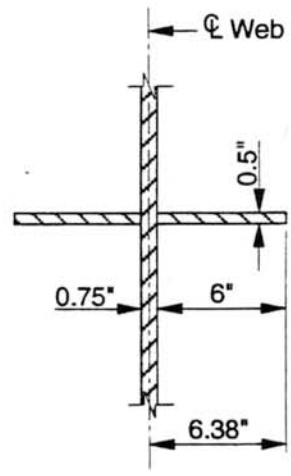

Figure 4-19
Web and Stiffener Cross Section

4.12 Flange-to-Web Weld

4.12.1 Weld Design

@ Pier 2 $V_{applied}$ = 857 k = Design Shear

Applied shear flow at flange-to-web weld:

$$s = \frac{VQ}{I}$$

where:

Q = static moment = 18(2⅞)49.4 = 2,556 in.^{3}

I = 308,257 in.^{4}

$$s = \frac{857(2,556)}{308,257} = 7.11 \text{ k/in.}$$

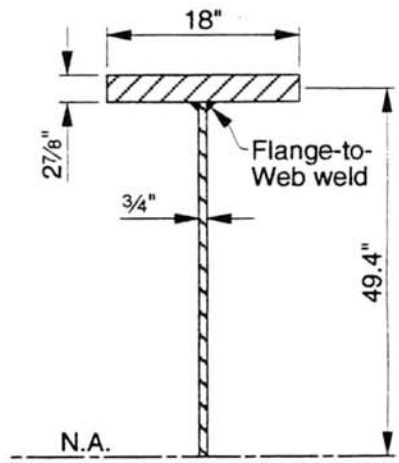

Figure 4-20
Girder Dimensions

According to BDS Article 10.23.6, the minimum size of fillet weld for 2⅞" plate is ½", but need not exceed the thickness of the thinner part joined. Use ½" fillet welds.

Allowable shear on throat of weld

$F_v = 0.45F_u$

F_u = ultimate strength of base metal or weld metal, whichever is smaller

For A709 Grade 50 F_u = 65 ksi

For E_{xx70} weld metal F_u = 70 ksi

Use F_u = 65 ksi

F_v = 0.45(65) = 29.3 ksi

allowable shear flow on throat of two ½" welds

= 2(½) 0.707(29.3) = 20.7 k/in.

applied shear = 7.11 k/in. < allowable = 20.7 k/in. Okay

Use ½" weld

4.12.2 Fatigue Check

For flange-to-web weld in shear, the allowable ranges of shear, F_{sr}, are:

Table 4-6

Type of Load	Cycles	Category	F_{sr}
P13 with HS20	100,000	F	15 ksi
HS20 Lane Load	500,000	F	12 ksi
HS20 Truck Load	2,000,000	F	9 ksi
HS20 Single Truck	over 2,000,000	F	8 ksi

Allowable shear flow for F_{sr} for 15 ksi = $2(^1/_2)\ 0.707(15) = 10.6$ k/in.

For 12 ksi ..... $2(^1/_2)\ 0.707(12) = 8.48$ k/in.

For 9 ksi ..... $2(^1/_2)\ 0.707(9) = 6.36$ k/in.

For 8 ksi ..... $2(^1/_2)\ 0.707(8) = 5.66$ k/in.

Applied Shear Range (See Section 4-16, Bridge Design System Computer Output):

1. HS20 (Multiple Lanes) 2,000,000 cycles (Truck Load)
   Shear range = $V_r = 1.38(87.6) = 121$ k

   $$s = \frac{V_r Q}{I} = \frac{121(2{,}556)}{308{,}257} = 1.0 \text{ k/in.} < 6.36 \text{ k/in.} \quad \text{Okay}$$

2. HS20 (Multiple Lanes) 500,000 cycles (Lane Load)
   Shear range = $V_r = 1.38(119) = 164$ k

   $$s = \frac{V_r Q}{I} = \frac{164(2{,}556)}{308{,}257} = 1.36 \text{ k/in.} < 8.48 \text{ k/in.} \quad \text{Okay}$$

3. P13 with HS20 100,000 cycles
   Shear range = $V_r = 0.56(119) + 1.15(0.81)304 = 350$ k

   $$s = \frac{V_r Q}{I} = \frac{350(2{,}556)}{308{,}257} = 2.90 \text{ k/in.} < 10.6 \text{ k/in.} \quad \text{Okay}$$

4. HS20 (Single Truck) over 2,000,000 cycles
   Shear range = $V_r = 0.81(87.6) = 71$ k

   $$s = \frac{V_r Q}{I} = \frac{71(2{,}556)}{308{,}257} = 0.59 \text{ k/in.} < 5.66 \text{ k/in.} \quad \text{Okay}$$

4.13 Shear Connectors

4.13.1 Fatigue Design

The shear connectors are designed for fatigue and checked for ultimate strength. Maximum spacing equals 24 inches.

$$S_r = \frac{V_r Q}{I} \qquad (10\text{-}57)$$

where:

S_r = range of horizontal shear flow
V_r = range of vertical shear due to $(LL+I)$ (Service Load)
Q = static moment of the transformed concrete area
I = moment of inertia of the composite section
s = spacing = $\frac{\Sigma Z_r}{S_r}$

where:

Z_r = allowable range for horizontal shear

for welded studs with $H/d \geq 4$, $Z_r = \alpha d^2$, where d = diameter of stud and

α = 13,000 for 100,000 cycles
= 10,600 for 500,000 cycles
= 7,850 for 2,000,000 cycles
= 5,500 for over 2,000,000 cycles

$\frac{Q}{I}$ = 0.010 from "COMP" program on IBM mainframe

1. HS20 (Multiple Lanes) 2,000,000 cycles (Truck Load)
   Allowable range of horizontal shear
   Assume 7/8" diameter studs, 3 per row

   $\alpha = 7{,}850$

   $$\Sigma Z_r = \frac{7{,}850(7/8)^2 3}{1{,}000} = 18\ ^{k}/_{3} \text{ studs} \rightarrow \text{spacing} = \frac{18}{S_r}$$

Table 4-7

Span 1	V_r	Q/I	S_r	Spacing
Abut 1	122	0.010	1.22	14.8
0.4L1	101	0.010	1.01	17.8
0.7L1	105	0.010	1.05	17.1

2. HS20 (Multiple Lanes) 500,000 cycles (Lane Load)

   $$\Sigma Z_r = \frac{10{,}600(7/8)^2 3}{1{,}000} = 24.3 \text{ k/3 studs} \rightarrow \text{spacing} = \frac{24.3}{S_r}$$

Table 4-8

Span 1	V_r	Q/I	S_r	Spacing
Abut 1	134	0.010	1.34	18.1
0.4L1	97.0	0.010	0.97	25.1 > 24 use 24
0.7L1	110	0.010	1.10	22.1

3. P13 with HS20 100,000 cycles

   $$\Sigma Z_r = \frac{13{,}000(7/8)^2 3}{1{,}000} = 29.9 \text{ k/3 studs} \rightarrow \text{spacing} = \frac{29.9}{S_r}$$

Table 4-9

Span 1	V_r	Q/I	S_r	Spacing
Abut 1	299	0010	2.99	10.0
0.4L1	171	0.010	1.71	17.5
0.7L1	199	0.010	1.99	15.0

4. HS20 (Single Truck) over 2,000,000 cycles

$$\Sigma Z_r = \frac{5{,}500(7/8)^2 3}{1{,}000} = 12.6 \text{ k}/3 \text{ studs} \rightarrow \text{spacing} = \frac{12.6}{S_r}$$

Table 4-10

Span 1	V_r	Q/I	S_r	Spacing
Abut 1	71.6	0.010	0.716	17.6
0.4L1	59.4	0.010	0.594	21.2
0.7L1	61.3	0.010	0.613	20.6

Spacing for Fatigue

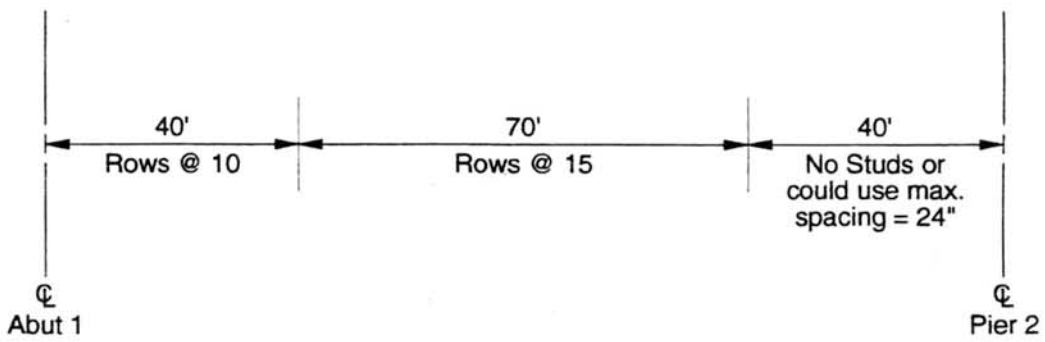

Figure 4-21 Spacing of Shear Studs

Number of studs provided for Span 1:

$$= (48 + 56 + 1) \times 3 = 315 \text{ studs}$$

These calculation are also applicable to Span 3 because the bridge is symmetrical. Span 2 calculations are similar.

4.13.2 Ultimate Strength

The number of studs provided for fatigue must be checked for the ultimate strength of the structure.

$$N_1 = \frac{P}{\phi S_u} \quad \text{(10-60)}$$

where:

N_1 = number of studs between point of maximum positive moment and adjacent end support or point of inflection.
ϕ = 0.85, a reduction factor
S_u = ultimate strength of connector
P = ultimate force capacity, smaller of

$$P_1 = A_s F_y \quad \text{(10-61)}$$
$$P_2 = 0.85\, f_c'\, b t_s \quad \text{(10-62)}$$

where:

A_s = area of steel section
F_y = yield point of steel
f_c' = compressive strength of concrete
b = effective flange width of concrete
t_s = thickness of concrete

The ultimate strength, S_u, of the stud connector with $H/d > 4$ is:

$$S_u = 0.4 d^2 \sqrt{f_c' E_c} \le A_{sc} F_y \quad \text{(10-66)}$$

where:

E_c = $w^{3/2} \times 33\sqrt{f_c'}$
f_c' = 3,250 psi, w = 145 pcf, $E_c = (145)^{3/2}\, 33\sqrt{3{,}250} = 3.3 \times 10^6$ psi, $d = 7/8$ in.

$$S_u = 0.4(7/8)^2 \sqrt{3{,}250(3.3\times10^6)}\left(\frac{1}{1{,}000}\right) = 31.7 \text{ k/stud}$$

A_{sc} = area of stud section
F_y = yield point of stud

$$A_{sc}F_y = \frac{\pi}{4}(7/8)^2(70) = 42.1 \text{ k/stud} \quad \therefore \text{use } S_u = 31.7 \text{ k per stud}$$

P_1 = $A_s F_y = 105(50) = 5{,}250$ k
P_2 = $0.85\, f_c' b t_s = 0.85(3.25)131(10^7/8) = 3{,}936$ k

therefore $P = 3{,}936$ k controls

$$\text{number of studs } N_1 = \frac{P}{\phi S_u} = \frac{3{,}936}{0.85(31.7)} = 147$$

number of studs required in compression flange length of Span 1 = 2 × 147 = 294 studs

315 studs provided for fatigue > 294 studs required for strength

Fatigue design governs the number of studs in Span 1

4.13.3 Shear Connectors at Points of Contraflexure

If no studs are used over the negative moment area, additional studs are required at the dead load points of contraflexure to anchor the additional deck reinforcement placed over the pier. The minimum amount of reinforcement is 1% of the concrete area, of which two-thirds must be placed in the top layer within the effective width.

Area of concrete = 14.50 ft^2

A_r^s = total area of longitudinal slab reinforcement over pier
= 0.01(14.50) = 0.145 ft^2 = 20.9 in.^{2}

Number of connectors:

$$N_c = \frac{A_r^s f_r}{Z_r} \quad \text{(10-68)}$$

where:

N_c = number of additional connectors at points of contraflexure

f_r = range of stress due to live load plus impact in the slab reinforcement. f_r may be taken as 10 ksi.

Z_r = allowable range of horizontal shear on an individual shear connector

$= \frac{12.6}{3} = 4.2$ for 7/8" diameter stud at over 2,000,000 cycles

$$N_c = \frac{20.9(10)}{4.2} = 50 \text{ studs}$$

These studs must be placed adjacent to the dead load point of contraflexure within a distance equal to one-third the effective slab width. The reinforcing should extend 40 diameters beyond this group.

4.14 Bearing Stiffener at Pier 2

Reaction at Pier 2 (*See Section 4-16, Bridge Design System Computer Output*):

1. *DL* (Girder + Slab) = 1.3(240 + 250) = 637 k
2. *DL* (rail + overlay) = 1.3(82 + 85) = 217 k
3. Live load – greater of either:
   a) I_H Group = 3.0 (185) = 555k
   b) I_{PW} Group = 0.73 (185) + 1.22 (344) = 555k

   R = 637 + 217 + 555 = 1,409 k

According to BDS Article 10.34.6, bearing stiffeners are designed as concentrically loaded columns.

$$P_u = 0.85 A_s F_{cr} \quad \text{(10-150)}$$

where:

A_s = gross effective area of column

and

$$F_{cr} = F_y \left[1 - \frac{F_y}{4\pi^2 E} \left(\frac{KL_c}{r} \right)^2 \right] \quad \text{(10-151)}$$

when

$$\frac{KL_c}{r} \le \sqrt{\frac{2\pi^2 E}{F_y}} \quad \text{(10-152)}$$

or

$$F_{cr} = \frac{\pi^2 E}{\left(\frac{KL_c}{r} \right)^2} \quad \text{(10-153)}$$

when

$$\frac{KL_c}{r} > \sqrt{\frac{2\pi^2 E}{F_y}} \quad \text{(10-154)}$$

where:

K = effective length factor
= 0.75 for welded end connections

r = radius of gyration, F_y = yield of steel, $E = 29 \times 10^6$ psi, F_{cr} = critical buckling stress

The stiffeners are A709 Grade 36 steel, F_y = 36 ksi

for short columns assume

$$F_{cr} = F_y = 36 \text{ ksi}$$

$$A_{\text{req'd}} = \frac{P}{F_{cr}} = \frac{1{,}409}{36} = 39.1 \text{ in.}^2$$

Try:

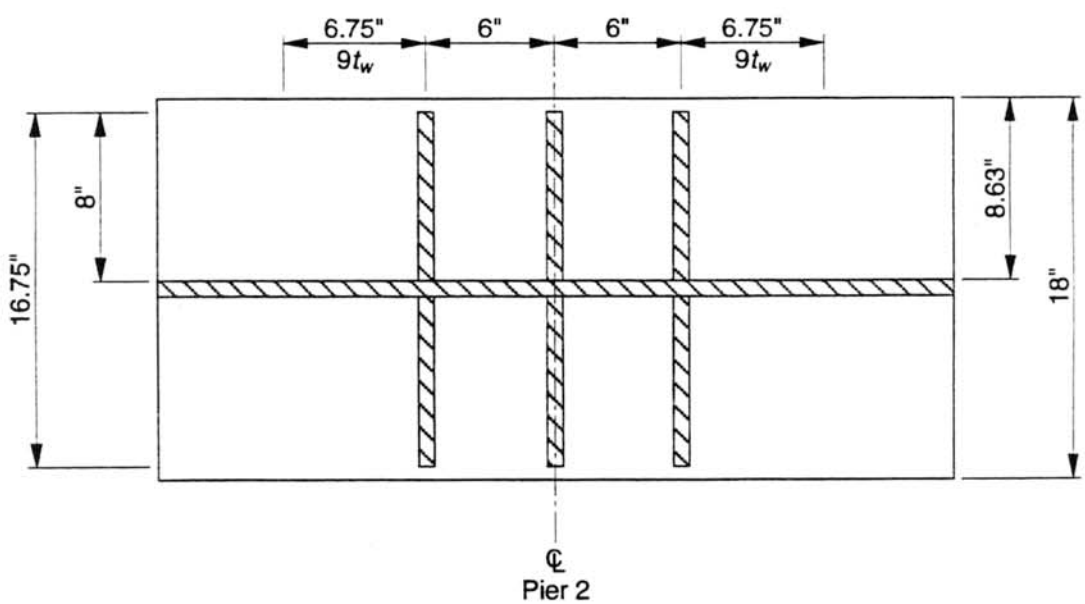

Figure 4-22 Plan View of Bearing Stiffeners

$$t_{\text{stiffener}} = \frac{39.1}{6(8)} = 0.81 \text{ in.}^2 \quad \text{Try } 8'' \times 3/4'' \text{ PL}$$

$$t_{\min} = \frac{b'}{12}\sqrt{\frac{F_y}{33{,}000}} \quad \text{(10-34)}$$

$$= \frac{8}{12}\sqrt{\frac{36{,}000}{33{,}000}} = 0.70 \text{ in.} < 0.75 \text{ in.} \quad \text{Okay}$$

Area:

stiffeners = (6)8(3/4) = 36 in.^{2}

web:

between stiffeners = 12(3/4) = 9 in.^{2}

outside stiffeners ($18t_w$) = 18(3/4)3/4 = 10.1 in.^{2}

total area = 55.1 in.^{2}

$$I_{x-x} = \frac{(3)\,3/4\,(16.75)^3}{12} = 881 \text{ in.}^4$$

$$r = \sqrt{\frac{I}{A}} = \sqrt{\frac{881}{55.1}} = 4.00 \text{ in.}$$

$$\frac{KL_c}{r} = \frac{0.75(96)}{4.00} = 18.0$$

$$\sqrt{\frac{2\pi^2 E}{F_y}} = \sqrt{\frac{2\pi^2(29\times10^6)}{36{,}000}} = 126 > \frac{KL_c}{r} = 18.0$$

$$\therefore F_{cr} = F_y\left[1 - \frac{F_y}{4\pi^2 E}\left(\frac{KL_c}{r}\right)^2\right]$$

$$= 36\left[1 - \frac{36}{4\pi^2(29\times10^6)}(18.0)^2\right] = 35.6 \text{ ksi}$$

$$P_u = 0.85A_sF_{cr} = 0.85(55.1)35.6 = 1{,}667 \text{ k} > 1{,}409 \text{ k} \quad \text{Okay}$$

Check bearing on end of stiffeners

bearing strength = $1.5F_y = 1.5(36) = 54$ ksi

applied bearing (assuming 1½ in. cope on bearing stiffeners)

$$= \frac{1{,}409}{6(8-1.5)0.75} = 48.2 \text{ ksi} \quad \text{Okay}$$

∴ use 6 PL 8" × ¾" @ Pier 2

Note: Spacing of bearing stiffeners is normally controlled by the size of the bearing pad. Access for welding should also be considered: the 6 inches shown in Figure 4-22, while adequate for design purposes, will make welding difficult.

4.15 Splice Plate Connection

Example and details to be completed at a later date and distributed at that time.

4.16 Bridge Design System Computer Output

The following pages are selected parts of "Bridge Design System" for the example problem.

INPUT FILE: STRUCTURAL STEEL DESIGN EXAMPLE PAGE 1

FRAME DESCRIPTION

MEM NO	JT. LT	JT. RT	END COND LT	END COND RT	DIR	SPAN	I	SUPPORT OR HINGE	E	DEAD LOAD UNI	DEAD LOAD SEC	K LT	K RT	CARRY OVER FACTORS LT	CARRY OVER FACTORS RT	RECALL MEM
1	1	2	R		H	150.0	90.00	0.0	3600.	2.500	.000	0.00	0.00	0.00	0.00	0
2	2	3			H	200.0	90.00	0.0	3600.	2.500	.000	0.00	0.00	0.00	0.00	0
3	3	4		R	H	150.0	90.00	0.0	3600.	2.500	.000	0.00	0.00	0.00	0.00	0
4	5	2		P		20.0	5.00	0.0	3250.	0.000	.000	0.00	0.00	0.00	0.00	0
5	6	3		P		20.0	5.00	0.0	3250.	0.000	.000	0.00	0.00	0.00	0.00	0

FRAME PROPERTIES

MEM NO	JT LT	JT RT	END COND LT	END COND RT	DIR	SPAN	MIN E*I	SUPPORT OR HINGE	E	CARRY OVER FACTORS LT	CARRY OVER FACTORS RT	DISTRIBUTION FACTORS LT	DISTRIBUTION FACTORS RT
1	1	2	R		H	150.0	0.3240E+06	0.0	3600.	0.500	0.000	0.000	0.500
2	2	3			H	200.0	0.3240E+06	0.0	3600.	0.500	0.500	0.500	0.500
3	3	4		R	H	150.0	0.3240E+06	0.0	3600.	0.000	0.500	0.500	0.000
4	5	2		P		20.0	0.1625E+05	0.0	3250.	0.000	0.500	0.000	0.000
5	6	3		P		20.0	0.1625E+05	0.0	3250.	0.000	0.500	0.000	0.000

*** FRAME DOES NOT SWAY WITH THIS LOADING ***

HORIZONTAL MEMBER MOMENTS TRIAL 0

MEM NO	LEFT	.1 PT	.2 PT	.3 PT	.4 PT	.5 PT	.6 PT	.7 PT	.8 PT	.9 PT	RIGHT
1	0.	1741.	2920.	3536.	3590.	3082.	2010.	377.	-1819.	-4578.	-7899.
2	-7899.	-3399.	101.	2601.	4101.	4601.	4101.	2601.	101.	-3399.	-7899.
3	-7899.	-4578.	-1819.	377.	2010.	3082.	3590.	3536.	2920.	1741.	0.

HORIZONTAL MEMBER SHEARS TRIAL 0

1	134.8	97.3	59.8	22.3	-15.2	-52.7	-90.2	-127.7	-165.2	-202.7	-240.2
2	250.0	200.0	150.0	100.0	50.0	0.0	-50.0	-100.0	-150.0	-200.0	-250.0
3	240.2	202.7	165.2	127.7	90.2	52.7	15.2	-22.3	-59.8	-97.3	-134.8

PAGE 2
LOAD DATA TRIAL 1

LINE MEM	W OR P	LOAD CODE	A	B	FIXED END MOMENTS LEFT	RIGHT	DEFLT	COMMENTS
1	0.850	U	0.0	0.0	0.	0.	0	0
		ASSUMED DATA 150.0						
2	0.850	U	0.0	0.0	0.	0.	0	0
		ASSUMED DATA 200.0						
3	0.850	U	0.0	0.0	0.	0.	0	0
		ASSUMED DATA 150.0						

HORIZONTAL MEMBER MOMENTS TRIAL 1

MEM NO	LEFT	.1 PT	.2 PT	.3 PT	.4 PT	.5 PT	.6 PT	.7 PT	.8 PT	.9 PT	RIGHT
1	0.	592.	993.	1202.	1221.	1048.	684.	128.	-619.	-1557.	-2686.
2	-2686.	-1156.	34.	884.	1394.	1564.	1394.	884.	34.	-1156.	-2686.
3	-2686.	-1557.	-619.	128.	684.	1048.	1221.	1202.	993.	592.	0.

HORIZONTAL MEMBER SHEARS TRIAL 1

1	45.8	33.1	20.3	7.6	-5.2	-17.9	-30.7	-43.4	-56.2	-68.9	-81.7
2	85.0	68.0	51.0	34.0	17.0	0.0	-17.0	-34.0	-51.0	-68.0	-85.0
3	81.7	68.9	56.2	43.4	30.7	17.9	5.2	-7.6	-20.3	-33.1	-45.8

LIVE LOAD DIAGNOSTICS

SUPERSTRUCTURE LIVE LOAD

MEM NO.	SUPERSTRUCTURE LT.END	RT.END	SUBSTRUCTURE LT.END	RT.END	UNIT STEEL POSITIVE	NEGATIVE	M ENV.	S	SCALE	ENCE LINES	GEN
1	1.000	1.000	1.0	1.0	0.	0.	0		0	NO	NO
2	1.000	1.000	1.0	1.0	0.	0.					
3	1.000	1.000	1.0	1.0	0.	0.					

LIVE LOAD NO.	TRUCK P1	D1	P2	D2	LANE P3	UNIFORM	NO. LIVE MOM. RIDER	SHEAR RIDER	IMPACT	LL LNS.	LOAD SIDESWAY
1.	8.0	14.0	32.0	14.0	32.0	0.640	18.0	26.0	YES	0.00	NO
	COMMENTS: HS20-44 AASHTO LOADING WITHOUT ALTERNATIVE										
2.	0.0	0.0	0.0	0.0	0.0	0.640	18.0	26.0	YES	0.00	NO
	COMMENTS: LANE LOADING										
3.	8.0	14.0	32.0	14.0	32.0	0.000	0.0	0.0	YES	0.00	NO
	COMMENTS: TRUCK LOADING										

AASHTO IMPACT FACTORS CALCULATED BY PROGRAM

MEM NO	IMPACT %
1	18.2
2	15.4
3	18.2

LL NO. 1. NEGATIVE LIVE LOAD MOMENT ENVELOPE AND ASSOCIATED SHEARS

MEM NO	LEFT	.1 PT	.2 PT	.3 PT	.4 PT	.5 PT	.6 PT	.7 PT	.8 PT	.9 PT	RIGHT
1	0.	-201.	-403.	-604.	-805.	-1007.	-1208.	-1409.	-1611.	-2155.	-3292.
SHEAR	0.0	-13.4	-13.4	-13.4	-13.4	-13.4	-13.4	-13.4	-13.4	-36.8	-91.4
2	-3292.	-1724.	-968.	-913.	-913.	-913.	-913.	-913.	-968.	-1724.	-3292.
SHEAR	94.9	59.6	-4.0	0.0	0.0	0.0	0.0	0.0	4.0	-38.8	-94.9
3	-3292.	-2155.	-1611.	-1409.	-1208.	-1007.	-805.	-604.	-403.	-201.	0.
SHEAR	91.4	36.8	13.4	13.4	13.4	13.4	13.4	13.4	13.4	13.4	0.0

LL NO. 1. POSITIVE LIVE LOAD MOMENT ENVELOPE AND ASSOCIATED SHEARS

MEM NO	LEFT	.1 PT	.2 PT	.3 PT	.4 PT	.5 PT	.6 PT	.7 PT	.8 PT	.9 PT	RIGHT
1	0.	1023.	1740.	2183.	2424.	2431.	2211.	1775.	1133.	545.	365.
SHEAR	0.0	68.2	58.0	31.5	17.7	-17.2	-30.7	-44.1	-57.2	-35.6	1.9
2	365.	537.	1319.	2014.	2560.	2744.	2560.	2014.	1319.	537.	365.
SHEAR	-6.4	66.1	58.4	44.8	27.6	10.4	-27.6	-44.8	-58.4	-66.1	6.4
3	365.	545.	1133.	1775.	2211.	2431.	2424.	2183.	1740.	1023.	0.
SHEAR	-1.9	35.6	57.2	44.1	30.7	17.2	-17.7	-31.5	-58.0	-68.2	0.0

LL NO. 1. LIVE LOAD SHEAR ENVELOPES AND ASSOCIATED MOMENTS

MEMBER	1 LEFT	.1 PT	.2 PT	.3 PT	.4 PT	.5 PT	.6 PT	.7 PT	.8 PT	.9 PT	RIGHT
POS. V	82.7	68.3	58.0	48.1	38.7	29.8	21.5	14.1	7.5	4.1	2.7
MOM.	0.	918.	1740.	2165.	2319.	2231.	1936.	1477.	904.	365.	284.
NEG. V	-14.5	-15.4	-21.3	-28.4	-36.7	-46.1	-56.5	-67.7	-79.7	-92.1	-105.0
MOM.	0.	421.	831.	1166.	1367.	1380.	1160.	671.	-116.	-1216.	-2634.
RANGE	97.3	83.7	79.2	76.5	75.3	75.8	78.0	81.8	87.2	96.2	107.7

PAGE 3 cont.

LL NO. 1. LIVE LOAD SHEAR ENVELOPES AND ASSOCIATED MOMENTS

MEMBER	2 LEFT	.1 PT	.2 PT	.3 PT	.4 PT	.5 PT	.6 PT	.7 PT	.8 PT	.9 PT	RIGHT
POS. V	110.2	93.8	78.0	63.3	49.8	38.0	27.9	19.7	13.4	9.5	9.0
MOM.	-2634.	-781.	529.	1328.	1679.	1671.	1413.	1023.	625.	702.	284.
NEG. V	-9.0	-9.5	-13.4	-19.7	-27.9	-38.0	-49.8	-63.3	-78.0	-93.8	-110.2
MOM.	284.	702.	1061.	1544.	1950.	2171.	2101.	1647.	734.	-687.	-2634.
RANGE	119.3	103.4	91.5	83.0	77.8	76.0	77.8	83.0	91.5	103.4	119.3

LL NO. 1. LIVE LOAD SHEAR ENVELOPES AND ASSOCIATED MOMENTS

MEMBER	3 LEFT	.1 PT	.2 PT	.3 PT	.4 PT	.5 PT	.6 PT	.7 PT	.8 PT	.9 PT	RIGHT
POS. V	105.0	92.1	79.7	67.7	56.5	46.1	36.7	28.4	21.3	15.4	14.5
MOM.	-2634.	-1216.	-116.	671.	1160.	1380.	1367.	1166.	831.	421.	0.
NEG. V	-2.7	-4.1	-7.5	-14.1	-21.5	-29.8	-38.7	-48.1	-58.0	-68.3	-82.7
MOM.	284.	549.	904.	1477.	1936.	2231.	2319.	2165.	1740.	1024.	0.
RANGE	107.7	96.2	87.2	81.8	78.0	75.8	75.3	76.5	79.2	83.7	97.3

LL NO. 1 LIVE LOAD SUPPORT RESULTS

	MAX. AXIAL LOAD	MAX. AXIAL LOAD ------MOMENT------		MAX. LONGITUDINAL MOMENT	MAX. LONGITUDINAL MOMENT ------MOMENT------	
	AXIAL LOAD	TOP	BOT.	AXIAL LOAD	TOP	BOT.
SUPPORT JT. 1						
POSITIVE	82.7	0.	0.	0.0	0.	0.
NEGATIVE	-14.5	0.	0.	0.0	0.	0.
SUPPORT JT. 2						
POSITIVE	185.2	0.	0.	0.0	0.	0.
NEGATIVE	-11.7	0.	0.	0.0	0.	0.
SUPPORT JT. 3						
POSITIVE	185.2	0.	0.	0.0	0.	0.
NEGATIVE	-11.7	0.	0.	0.0	0.	0.
SUPPORT JT. 4						
POSITIVE	82.7	0.	0.	0.0	0.	0.
NEGATIVE	-14.5	0.	0.	0.0	0.	0.

THE RATIO OF SUBSTRUCTURE / SUPERSTRUCTURE LOADING IS 1.000

LL NO. 2. NEGATIVE LIVE LOAD MOMENT ENVELOPE AND ASSOCIATED SHEARS

MEM NO	LEFT	.1 PT	.2 PT	.3 PT	.4 PT	.5 PT	.6 PT	.7 PT	.8 PT	.9 PT	RIGHT
1	0.	-201.	-403.	-604.	-805.	-1007.	-1208.	-1409.	-1611.	-2155.	-3292.
SHEAR	0.0	-13.4	-13.4	-13.4	-13.4	-13.4	-13.4	-13.4	-13.4	-36.8	-91.4
2	-3292.	-1724.	-968.	-913.	-913.	-913.	-913.	-913.	-968.	-1724.	-3292.
SHEAR	94.9	59.6	-4.0	0.0	0.0	0.0	0.0	0.0	4.0	-38.8	-94.9
3	-3292.	-2155.	-1611.	-1409.	-1208.	-1007.	-805.	-604.	-403.	-201.	0.
SHEAR	91.4	36.8	13.4	13.4	13.4	13.4	13.4	13.4	13.4	13.4	0.0

LL NO. 2. POSITIVE LIVE LOAD MOMENT ENVELOPE AND ASSOCIATED SHEARS

MEM NO	LEFT	.1 PT	.2 PT	.3 PT	.4 PT	.5 PT	.6 PT	.7 PT	.8 PT	.9 PT	RIGHT
1	0.	975.	1702.	2183.	2424.	2431.	2211.	1775.	1133.	545.	365.
SHEAR	0.0	59.3	45.4	31.5	17.7	-17.2	-30.7	-44.1	-57.2	-35.6	1.9
2	365.	517.	1156.	2014.	2560.	2744.	2560.	2014.	1156.	517.	365.
SHEAR	-6.4	31.0	50.2	44.8	27.6	10.4	-27.6	-44.8	-50.2	-31.0	6.4
3	365.	545.	1133.	1775.	2211.	2431.	2424.	2183.	1702.	975.	0.
SHEAR	-1.9	35.6	57.2	44.1	30.7	17.2	-17.7	-31.5	-45.4	-59.3	0.0

LL NO. 2. LIVE LOAD SHEAR ENVELOPES AND ASSOCIATED MOMENTS

MEMBER	1 LEFT	.1 PT	.2 PT	.3 PT	.4 PT	.5 PT	.6 PT	.7 PT	.8 PT	.9 PT	RIGHT
POS. V	82.7	68.3	55.3	43.8	33.7	25.0	17.8	11.9	7.4	4.1	2.7
MOM.	0.	918.	1453.	1676.	1659.	1474.	1189.	869.	576.	365.	284.
NEG. V	-14.5	-15.4	-21.3	-28.4	-36.7	-46.1	-56.5	-67.7	-79.7	-92.1	-105.0
MOM.	0.	421.	831.	1166.	1367.	1380.	1160.	671.	-116.	-1216.	-2634.
RANGE	97.3	83.7	76.6	72.1	70.3	71.1	74.3	79.6	87.0	96.2	107.7

LL NO. 2. LIVE LOAD SHEAR ENVELOPES AND ASSOCIATED MOMENTS

MEMBER	2 LEFT	.1 PT	.2 PT	.3 PT	.4 PT	.5 PT	.6 PT	.7 PT	.8 PT	.9 PT	RIGHT
POS. V	110.2	93.8	78.0	63.3	49.8	38.0	27.9	19.7	13.4	9.5	9.0
MOM.	-2634.	-781.	529.	1328.	1679.	1671.	1413.	1023.	625.	702.	284.
NEG. V	-9.0	-9.5	-13.4	-19.7	-27.9	-38.0	-49.8	-63.3	-78.0	-93.8	-110.2
MOM.	284.	702.	1061.	1544.	1950.	2171.	2101.	1647.	734.	-687.	-2634.
RANGE	119.3	103.4	91.5	83.0	77.8	76.0	77.8	83.0	91.5	103.4	119.3

LL NO. 2. LIVE LOAD SHEAR ENVELOPES AND ASSOCIATED MOMENTS

MEMBER	3 LEFT	.1 PT	.2 PT	.3 PT	.4 PT	.5 PT	.6 PT	.7 PT	.8 PT	.9 PT	RIGHT
POS. V	105.0	92.1	79.7	67.7	56.5	46.1	36.7	28.4	21.3	15.4	14.5
MOM.	-2634.	-1216.	-116.	671.	1160.	1380.	1367.	1166.	831.	421.	0.
NEG. V	-2.7	-4.1	-7.4	-11.9	-17.8	-25.0	-33.7	-43.8	-55.3	-68.3	-82.7
MOM.	284.	549.	886.	1253.	1601.	1877.	2020.	1969.	1659.	1024.	0.
RANGE	107.7	96.2	87.0	79.6	74.3	71.1	70.3	72.1	76.6	83.7	97.3

PAGE 5

LL NO. 3. NEGATIVE LIVE LOAD MOMENT ENVELOPE AND ASSOCIATED SHEARS

MEM NO	LEFT	.1 PT	.2 PT	.3 PT	.4 PT	.5 PT	.6 PT	.7 PT	.8 PT	.9 PT	RIGHT
1	0.	-148.	-295.	-443.	-590.	-738.	-886.	-1033.	-1181.	-1328.	-1476.
SHEAR	0.0	-9.8	-9.8	-9.8	-9.8	-9.8	-9.8	-9.8	-9.8	-9.8	-9.8
2	-1476.	-981.	-836.	-692.	-547.	-402.	-547.	-692.	-836.	-981.	-1476.
SHEAR	53.7	7.2	7.2	7.2	7.2	7.2	-7.2	-7.2	-7.2	-7.2	-53.7
3	-1476.	-1328.	-1181.	-1033.	-886.	-738.	-590.	-443.	-295.	-148.	0.
SHEAR	9.8	9.8	9.8	9.8	9.8	9.8	9.8	9.8	9.8	9.8	0.0

LL NO. 3. POSITIVE LIVE LOAD MOMENT ENVELOPE AND ASSOCIATED SHEARS

MEM NO	LEFT	.1 PT	.2 PT	.3 PT	.4 PT	.5 PT	.6 PT	.7 PT	.8 PT	.9 PT	RIGHT
1	0.	1023.	1740.	2169.	2360.	2324.	2097.	1675.	1103.	434.	322.
SHEAR	0.0	68.2	58.0	41.7	32.1	-37.6	-46.5	-54.6	-62.0	-68.5	2.1
2	322.	537.	1319.	1944.	2339.	2461.	2339.	1944.	1319.	537.	322.
SHEAR	-7.2	66.1	58.4	49.5	39.9	-30.0	-39.9	-49.5	-58.4	-66.1	7.2
3	322.	434.	1103.	1675.	2097.	2324.	2360.	2169.	1740.	1023.	0.
SHEAR	-2.1	68.5	62.0	54.6	46.5	37.6	-32.1	-41.7	-58.0	-68.2	0.0

LL NO. 3. LIVE LOAD SHEAR ENVELOPES AND ASSOCIATED MOMENTS

MEMBER	1 LEFT	.1 PT	.2 PT	.3 PT	.4 PT	.5 PT	.6 PT	.7 PT	.8 PT	.9 PT	RIGHT
POS. V	78.6	68.2	58.0	48.1	38.7	29.8	21.5	14.1	7.5	2.1	2.1
MOM.	0.	1023.	1740.	2165.	2319.	2231.	1936.	1477.	904.	289.	322.
NEG. V	-9.8	-9.8	-14.4	-24.6	-34.6	-44.2	-53.2	-61.6	-69.3	-76.1	-81.8
MOM.	0.	-148.	1327.	1926.	2235.	2274.	2074.	1669.	1103.	426.	-304.
RANGE	88.4	78.0	72.4	72.7	73.3	73.9	74.7	75.7	76.8	78.2	84.0

LL NO. 3. LIVE LOAD SHEAR ENVELOPES AND ASSOCIATED MOMENTS

MEMBER	2 LEFT	.1 PT	.2 PT	.3 PT	.4 PT	.5 PT	.6 PT	.7 PT	.8 PT	.9 PT	RIGHT
POS. V	80.3	73.7	65.6	56.5	46.8	36.9	27.2	18.1	9.9	7.2	7.2
MOM.	-349.	513.	1305.	1924.	2303.	2406.	2226.	1791.	1161.	177.	322.
NEG. V	-7.2	-7.2	-9.9	-18.1	-27.2	-36.9	-46.8	-56.5	-65.6	-73.7	-80.3
MOM.	322.	177.	1161.	1791.	2226.	2406.	2303.	1924.	1305.	513.	-349.
RANGE	87.6	80.9	75.5	74.6	74.0	73.8	74.0	74.6	75.5	80.9	87.6

LL NO. 3. LIVE LOAD SHEAR ENVELOPES AND ASSOCIATED MOMENTS

MEMBER	3 LEFT	.1 PT	.2 PT	.3 PT	.4 PT	.5 PT	.6 PT	.7 PT	.8 PT	.9 PT	RIGHT
POS. V	81.8	76.1	69.3	61.6	53.2	44.2	34.6	24.6	14.4	9.8	9.8
MOM.	-304.	426.	1103.	1669.	2074.	2274.	2235.	1926.	1327.	-148.	0.
NEG. V	-2.1	-2.1	-7.5	-14.1	-21.5	-29.8	-38.7	-48.1	-58.0	-68.2	-78.6
MOM.	322.	289.	904.	1477.	1936.	2231.	2319.	2165.	1740.	1023.	0.
RANGE	84.0	78.2	76.8	75.7	74.7	73.9	73.3	72.7	72.4	78.0	88.4

LIVE LOAD DIAGNOSTICS PAGE 6

LIVE LOAD GENERATOR

MEM NO.	NUMBER OF LIVE LOAD LANES SUPERSTRUCTURE LT.END	SUPERSTRUCTURE RT.END	SUBSTRUCTURE LT.END	SUBSTRUCTURE RT.END	RESISTING MOMENT OF UNIT STEEL POSITIVE	NEGATIVE	PLOT M ENV.	PLOT S SCALE	INFLUENCE LINES	GEN
1	1.000	1.000	1.0	1.0	0.	0.	0	0	NO	YES
2	1.000	1.000	1.0	1.0	0.	0.				
3	1.000	1.000	1.0	1.0	0.	0.				

LL NO. 4. NEGATIVE LIVE LOAD MOMENT ENVELOPE AND ASSOCIATED SHEARS

*** SPECIAL TRUCK WITH 7 AXLES WAS REQUESTED THIS LIVE LOAD ***

MEM NO	LEFT	.1 PT	.2 PT	.3 PT	.4 PT	.5 PT	.6 PT	.7 PT	.8 PT	.9 PT	RIGHT
1	0.	-555.	-1110.	-1664.	-2219.	-2774.	-3329.	-3884.	-4438.	-4993.	-5548.
SHEAR	0.0	-37.0	-37.0	-37.0	-37.0	-37.0	-37.0	-37.0	-37.0	-37.0	-37.0
2	-5548.	-3386.	-2887.	-2387.	-1887.	-1388.	-1887.	-2387.	-2887.	-3386.	-5548.
SHEAR	217.4	25.0	25.0	25.0	25.0	25.0	-25.0	-25.0	-25.0	-25.0	-217.4
3	-5548.	-4993.	-4438.	-3884.	-3329.	-2774.	-2219.	-1664.	-1110.	-555.	0.
SHEAR	37.0	37.0	37.0	37.0	37.0	37.0	37.0	37.0	37.0	37.0	0.0

LL NO. 4. POSITIVE LIVE LOAD MOMENT ENVELOPE AND ASSOCIATED SHEARS

*** SPECIAL TRUCK WITH 7 AXLES WAS REQUESTED THIS LIVE LOAD ***

MEM NO	LEFT	.1 PT	.2 PT	.3 PT	.4 PT	.5 PT	.6 PT	.7 PT	.8 PT	.9 PT	RIGHT
1	0.	2777.	4772.	6014.	6648.	6588.	5862.	4437.	2436.	999.	1110.
SHEAR	0.0	185.1	136.4	93.5	48.4	-57.4	-99.9	-144.1	-185.9	7.4	7.4
2	1110.	611.	3074.	5528.	6998.	7494.	6998.	5528.	3074.	611.	1110.
SHEAR	-25.0	-25.0	171.9	122.6	82.3	-32.6	-82.3	-122.6	-171.9	25.0	25.0
3	1110.	999.	2436.	4437.	5862.	6588.	6648.	6014.	4772.	2777.	0.
SHEAR	-7.4	-7.4	185.9	144.1	99.9	57.4	-48.4	-93.5	-136.4	-185.1	0.0

LL NO. 4. LIVE LOAD SHEAR ENVELOPES AND ASSOCIATED MOMENTS

*** SPECIAL TRUCK WITH 7 AXLES WAS REQUESTED THIS LIVE LOAD ***

MEMBER	1 LEFT	.1 PT	.2 PT	.3 PT	.4 PT	.5 PT	.6 PT	.7 PT	.8 PT	.9 PT	RIGHT
POS. V	225.7	185.1	146.8	111.3	79.1	50.7	26.2	7.4	7.4	7.4	7.4
MOM.	0.	2777.	4405.	5010.	4748.	3799.	2360.	777.	888.	999.	1110.
NEG. V	-37.0	-37.0	-37.0	-37.3	-60.4	-88.3	-120.8	-158.8	-198.0	-235.5	-270.1
MOM.	0.	-555.	-1110.	2914.	3865.	4439.	4445.	3745.	2137.	-329.	-3480.
RANGE	262.7	222.1	183.8	148.7	139.5	139.0	147.0	166.2	205.4	242.9	277.5

PAGE 7

LL NO. 4. LIVE LOAD SHEAR ENVELOPES AND ASSOCIATED MOMENTS

*** SPECIAL TRUCK WITH 7 AXLES WAS REQUESTED THIS LIVE LOAD ***

MEMBER	2 LEFT	.1 PT	.2 PT	.3 PT	.4 PT	.5 PT	.6 PT	.7 PT	.8 PT	.9 PT	RIGHT
POS. V	278.7	241.2	201.2	160.4	120.4	83.0	49.9	25.0	25.0	25.0	25.0
MOM.	-4569.	-586.	2539.	4580.	5452.	5207.	4029.	-389.	111.	611.	1110.
NEG. V	-25.0	-25.0	-25.0	-25.0	-49.9	-83.0	-120.4	-160.4	-201.2	-241.2	-278.7
MOM.	1110.	611.	111.	-389.	4029.	5207.	5452.	4580.	2539.	-586.	-4569.
RANGE	303.6	266.2	226.2	185.3	170.2	166.0	170.2	185.3	226.2	266.2	303.6

LL NO. 4. LIVE LOAD SHEAR ENVELOPES AND ASSOCIATED MOMENTS

*** SPECIAL TRUCK WITH 7 AXLES WAS REQUESTED THIS LIVE LOAD ***

MEMBER	3 LEFT	.1 PT	.2 PT	.3 PT	.4 PT	.5 PT	.6 PT	.7 PT	.8 PT	.9 PT	RIGHT
POS. V	270.1	235.5	198.0	158.8	120.8	88.3	60.4	37.3	37.0	37.0	37.0
MOM.	-3480.	-329.	2137.	3745.	4445.	4439.	3865.	2914.	-1110.	-555.	0.
NEG. V	-7.4	-7.4	-7.4	-7.4	-26.2	-50.7	-79.1	-111.3	-146.8	-185.1	-225.7
MOM.	1110.	999.	888.	777.	2360.	3799.	4748.	5010.	4405.	2777.	0.
RANGE	277.5	242.9	205.4	166.2	147.0	139.0	139.5	148.7	183.8	222.1	262.7

*** SPECIAL TRUCK WITH 7 AXLES WAS SUGGESTED THIS LIVE LOAD ***

LL NO. 4 LIVE LOAD SUPPORT RESULTS

	MAX. AXIAL LOAD	MAX. AXIAL LOAD MOMENT TOP	MAX. AXIAL LOAD MOMENT BOT.	MAX. LONGITUDINAL MOMENT AXIAL LOAD	MAX. LONGITUDINAL MOMENT TOP	MAX. LONGITUDINAL MOMENT BOT.
SUPPORT JT. 1						
POSITIVE	225.7	0.	0.	0.0	0.	0.
NEGATIVE	-37.0	0.	0.	0.0	0.	0.
SUPPORT JT. 2						
POSITIVE	344.3	0.	0.	0.0	0.	0.
NEGATIVE	-32.4	0.	0.	0.0	0.	0.
SUPPORT JT. 3						
POSITIVE	344.3	0.	0.	0.0	0.	0.
NEGATIVE	-32.4	0.	0.	0.0	0.	0.
SUPPORT JT. 4						
POSITIVE	225.7	0.	0.	0.0	0.	0.
NEGATIVE	-37.0	0.	0.	0.0	0.	0.

THE RATIO OF SUBSTRUCTURE / SUPERSTRUCTURE LOADING IS 1.000