Section 2 – Reinforced Concrete

Notations and Abbreviations 2-1

2.0.0 Introduction 2-4

Part A – Design Example 2-5

2.1.0 Structure Requirements 2-5

2.2.0 Typical Section Geometry 2-5

2.3.0 Superstructure Loads 2-8

2.3.1 Dead Loads, D 2-8

2.3.2 Live Loads, L 2-8

2.4.0 Effective Depth 2-9

2.4.1 Minimum Bar Cover 2-9

2.4.2 Transverse Bars 2-9

2.5.0 Factored Design Shears 2-10

2.6.0 Girder Web Flares 2-11

2.7.0 Factored Design Moments 2-14

2.8.0 Maximum Design Moments 2-15

2.9.0 Steel Requirements at Maximum Moment Section 2-15

2.9.1 Positive Moment Section Parameters 2-15

2.9.2 Span 1 0.4 point, M_u = 10777 k-ft (Solution Method 1) 2-16

2.9.3 Span 2 0.5 point, M_u = 19126 k-ft (Solution Method 2) 2-16

2.9.4 Span 3 0.6 point, M_u = 14529 k-ft (Solution Method 3) 2-17

2.9.5 Negative Moment Section Parameters 2-18

2.9.6 Bent 2, M_u = – 22504 k-ft 2-18

2.9.7 Bent 3, Mu = -23577 k-ft 2-18

2.10.0 Maximum Allowed Tension Steel 2-19

2.10.1 Maximum Tension Steel in the Soffit Slab 2-19

2.10.2 Maximum Tension Steel in the Deck Slab 2-19

2.11.0 Effective Tension Flange Width 2-20

2.11.1 Span 2 - Positive Moment Tension Flange Width (soffit slab) 2-20

2.11.2 Bent 3 - Negative Moment Tension Flange Width (deck slab) 2-21

2.12.0 Positive Moment Bar Size Limitation 2-23

2.12.1 Span 2 Inflection Points 2-23

2.12.2 Span 3 Inflection Point 2-23

2.12.3 Span 3 Abutment 2-24

2.13.0 Crack Control (Pre-Design) 2-24

2.13.1 Span 2 0.5 point - #9 bars only 2-27

2.14.0 Bar Spacing Limits 2-29

2.14.1 Minimum Bar Spacing Limits 2-29

2.14.2 Maximum Bar Spacing Limits 2-29

2.14.3 Minimum Number of Bars Required 2-29

2.15.0 Minimum Reinforcement Requirements 2-30

2.16.0 Bar Layout, Span 2 2-31

2.16.1 Choose Bar Groups 2-31

2.17.0 Bar Layout, Span 3 - Positive Moment 2-34

2.17.1 Choose Bar Groups 2-34

2.18.0 Bar Layout, Bent 3, Negative Moment 2-37

2.18.1 Choose Bar Groups 2-37

2.19.0 Fatigue Check 2-39

2.20.0 Final Bar Layouts **2-42**

2.20.1 Span 2 - Bottom Slab Reinforcement 2-42

2.20.2 Span 3 - Bottom Slab Reinforcement 2-43

2.20.3 Bent 3 - Top Slab Reinforcement 2-44

2.21.0 Longitudinal Web Reinforcement **2-45**

2.22.0 Shear Reinforcement **2-46**

2.22.1 Stirrup Design Within The Flares 2-47

2.22.2 Stirrup Spacing Limits 2-48

2.22.3 Shear Capacity for Different Stirrup Spacings 2-48

2.22.4 Graphical Procedure 2-49

2.23.0 Bent 3 Model **2-50**

2.24.0 Bent Loads **2-50**

2.24.1 Dead Loads 2-50

2.24.2 Live Loads 2-50

2.25.0 Bent Cap Geometry **2-51**

2.26.0 Face of Bent Support **2-52**

2.27.0 Factored Cap Design Moments **2-53**

2.28.0 Maximum Design Moments **2-53**

2.29.0 Bent Cap Minimum Reinforcement Requirements **2-54**

2.29.1 For Positive Moments 2-54

2.29.2 For Negative Moments 2-54

2.30.0 Cap Effective Depth **2-54**

2.31.0 Cap Steel Requirements **2-55**

2.31.1 Positive Moment Sections 2-55

2.31.2 Negative Moment Sections 2-55

2.32.0 Crack Control **2-56**

2.33.0 Construction Reinforcement **2-57**

2.34.0 Cap Side Face Reinforcement **2-59**

2.35.0 Cap Shear Reinforcement **2-59**

2.35.1 Span 1 Shear Design at Support Face 2-60

2.35.2 Span 1 Shear Design at Cap End 2-61

2.36.0 Final Cap Design **2-63**

2.37.0 Computer Output **2-64**

2.37.1 Factored Loads – BDS 2-65

2.37.2 Service Loads – BDS 2-78

2.37.3 Bent 3 Loads – BENT 2-86

Part B: Design Notes **2-92**

2.38.0 Service Load Design - Overview **2-92**

2.39.0 Strength Design Method - Overview **2-93**

2.40.0 Face Support - Negative Moment Design **2-95**

2.40.1 Example 2-96

2.41.0 Cross Sections Experiencing Positive Bending **2-97**

2.42.0 Cross Sections Experiencing Negative Bending **2-98**

2.43.0 T-Girder Compression Flange Width Positive Moment Case **2-99**

2.43.1 Example 2-100

2.44.0 Box Girder Compression Flange Width **2-100**

2.45.0 Box Girder Effective Tension Flange Positive Moment Case **2-101**

2.45.1 Example 2-102

2.46.0 Box Girder/T-Girder Effective Tension Flange Negative Moment Case **2-103**

2.47.0 Rectangular Section With Tension Bars Only 2-104

2.45.1 Example 2-105

2.48.0 Flanged Section With Tension Bars Only 2-106

2.48.1 Example 2-108

2.48.2 Example 2-108

2.49.0 Bar Spacing Limits for Girders 2-109

2.50.0 Development of Reinforcement 2-110

2.51.0 Positive Moment Bar Size Limitation 2-110

2.51.1 Example 2-110

2.52.0 Minimum Reinforcement Requirements 2-111

2.52.1 Example 2-112

2.53.0 Moment Capacity Diagram 2-113

2.54.0 Moment Capacity Diagram Versus Design Moment Envelope 2-114

2.55.0 Bar Layout-Graphical Procedure 2-115

2.56.0 Matching Bar Ends 2-117

2.57.0 Working Stress Analysis Calculations 2-119

2.57.1 Example 2-120

2.58.0 Crack Control Serviceability 2-121

2.59.0 Crack Control Check - Post Design Rectangular Sections 2-122

2.59.1 Example 2-123

2.60.0 Crack Control Check - Post Design / Box Girder with Single Layer of Steel 2-124

2.60.1 Example 2-125

2.61.0 Crack Control - Pre Design 2-126

2.62.0 Pre Design Crack Control Derivation 2-128

2.62.1 Final Logic 2-129

2.63.0 Fatigue Serviceability 2-130

2.63.1 Derivation for Procedure Outlined 2-131

2.63.2 Example 2-132

2.64.0 Shear Design 2-133

2.65.0 Shear Design and Girder Webs 2-133

2.66.0 Shear Design of Flared Girder Webs - Example 2-134

2.67.0 Shear Modification Due To Bar Cutoffs 2-137

2.67.1 Modification Method 1 2-137

2.67.2 Modification Method 2 2-137

2.67.3 Modification Method 1 - Derivation 2-139

2.67.4 Modification Method 2 - Derivation 2-139

2.68.0 Shear Friction Design 2-140

2.68.1 Basic Shear Friction Requirements 2-142

2.68.2 Example-Shear Key 2-144

2.69.0 Compression Members 2-145

2.69.1 Example 2-146

2.69.2 Example 2-150

Reinforced Concrete Design

Notations

a = depth of equivalent rectangular stress block (BDS Article 8.16.2.7)

a_b = depth of equivalent rectangular stress block for balanced strain conditions, inches (BDS Article 8.16.4.2.3)

A = effective tension area of concrete surrounding the flexural tension reinforcement and having the same centroid as that reinforcement, divided by the number of bars or wires, square inches; when the flexural reinforcement consists of several bar sizes or wires the number of bars or wires shall be computed as the total area of reinforcement divided by the area of the largest bar or wire used (BDS Article 8.16.8.4)

A_b = area of an individual bar, square inches (BDS Article 8.25.1)

A_{cv} = area of concrete section resisting shear transfer, square inches (BDS Article 8.16.6.4.5)

A_g = gross area of section, square inches

A_n = area of reinforcement in bracket or corbel resisting tensile force, N_c (N_{uc}), square inches (BDS Articles 8.15.5.8 and 8.16.6.8)

A_s = area of tension reinforcement, square inches

A'_s = area of compression reinforcement, square inches

A_{sf} = area of reinforcement to develop compressive strength of overhanging flanges of I- and T-sections (BDS Article 8.16.3.3.2)

A_v = area of shear reinforcement within a distance s

A_{vf} = area of shear-friction reinforcement, square inches (BDS Article 8.15.5.4.3)

b = width of compression face of member

b_t = effective tension flange width (not a code variable)

b_w = web width, or diameter of circular section. For tapered webs, the average width or 1.2 times the minimum width, whichever is smaller, inches (BDS Article 8.15.5.1.1)

c = distance from extreme compression fiber to neutral axis (BDS Article 8.16.2.7)

d = distance from extreme compression fiber to centroid of tension reinforcement, inches. For computing shear strength of circular sections, d need not be less than the distance from extreme compression fiber to centroid of tension reinforcement in opposite half of member. For computing horizontal shear strength of composite members, d shall be the distance from extreme compression fiber to centroid of tension reinforcement for entire composite section.

d' = distance from extreme compression fiber to centroid of compression reinforcement, inches

d_b = nominal diameter of bar or wire, inches

d_c = thickness of concrete cover measured from extreme tension fiber to center of bar or wire located closest thereto (BDS Article 8.16.8.4)

E_c = modulus of elasticity of concrete, psi (BDS Article 8.7.1)

E_s = modulus of elasticity of reinforcement, psi (BDS Article 8.7.2)

f_c = extreme fiber compressive stress in concrete at service loads (BDS Article 8.15.2.1.1)

f'_c = specified compressive strength of concrete, psi

$\sqrt{f'_c}$ = square root of specified compressive strength of concrete, psi

f_f = fatigue stress range in reinforcement, ksi (BDS Article 8.16.8.3)

f_{min} = algebraic minimum stress level in reinforcement (BDS Article 8.16.8.3)

f_r = modulus of rupture of concrete, psi (BDS Article 8.15.2.1.1)

f_s = tensile stress in reinforcement at service loads, psi (BDS Article 8.15.2.2)

f'_s = stress in compression reinforcement (different than defined in code)

f_t = extreme fiber tensile stress in concrete at service loads (BDS Article 8.15.2.1.1)

f_y = specified yield strength of reinforcement, psi

h = overall thickness of member, inches

h_f = compression flange thickness of I- and T- sections

h_t = tension flange thickness (not a code variable)

I_g = moment of inertia of gross concrete section about centroidal axis, neglecting reinforcement

L = span length (not a code variable)

ℓ_a = additional embedment length at support or at point of inflection, inches (BDS Article 8.24.2.3)

L_{clr} = clear span length (not a code variable)

ℓ_d = development length, inches

M_{cr} = cracking moment (BDS Article 8.13.3)

M_n = nominal moment strength of a section

M_u = factored moment at section

n = modular ratio of elasticity = E_s/E_c (BDS Article 8.15.3.4)

n = number of bars

N = effective number of bars

N_u = factored axial load normal to the cross section occurring simultaneously with V_u

P_b = nominal axial load strength of a section at balanced strain conditions (BDS Article 8.16.4.2.3)

P_n = nominal axial load strength at given eccentricity

P_u = factored axial load at given eccentricity

s = spacing of shear reinforcement in direction parallel to the longitudinal reinforcement, inches

t = tension flange thickness (not a code variable)

V_c = nominal shear strength provided by concrete (BDS Article 8.16.6.1)

V_n = nominal shear strength (BDS Article 8.16.6.1)

V_s = nominal shear strength provided by shear reinforcement (BDS Article 8.16.6.1)

V_u = factored shear force at section (BDS Article 8.16.6.1)

y_t = distance from centroidal axis of gross section, neglecting reinforcement, to extreme fiber in tension (BDS Article 8.13.3)

z = quantity limiting distribution of flexural reinforcement (BDS Article 8.16.8.4)

α_f = angle between shear-friction reinforcement and shear plane (BDS Articles 8.15.5.4 and 8.16.6.4)

β_b = ratio of area of reinforcement cut off

(beta) to total area of reinforcement at the section (BDS Article 8.24.1.4.2)

β_1 = ratio of depth of equivalent compression zone to depth from fiber of maximum compressive strain to the neutral axis (BDS Article 8.16.2.7)

λ = correction factor related to unit weight for concrete (BDS Articles 8.15.5.4 and 8.16.6.4)

μ (mu)= coefficient of friction (BDS Article 8.15.5.4.3)

ρ (rho)= tension reinforcement ratio = A_s/bd

ρ' = compression reinforcement ratio = A'_s/bd

ρ_b = reinforcement ratio producing balanced strain conditions (BDS Article 8.16.3.1.1)

ϕ (phi)= strength reduction factor (BDS Article 8.16.1.2)

Abbreviations

BDS = *Bridge Design Specifications*

2.0.0 Introduction

The purpose of this section of the Bridge Design Practice Manual is to assist design engineers with reinforced concrete design.

There are two parts to this chapter:

Part A – Design Example

This section contains an example design solution for a reinforced concrete box girder superstructure using Strength Design methods. The computer programs "Bridge Design System" and "Bent" were used to do the required structural analysis.

It should be noted that the example does not constitute a complete bridge design. Only enough work has been done to demonstrate design methods. For example, tension steel has not been designed for every span of the structure as would be done for an actual bridge design. Additionally, there are other design considerations not considered in the example. For instance, seismic design has not been addressed. It is hoped, however, that the example will provide a good foundation for the design of reinforced concrete bridge structures.

Also, note that the example does not completely meet current CALTRANS design standards. For example, current CALTRANS standards require continuous small diameter tension bars in box girder bridges in addition to large diameter bars. However, for simplicity, the small diameter bars were not utilized in this example.

It is also important to note that the example design is *only* an example. It is the work of *only* one engineer. *The methods used should not be viewed as Caltrans standards!* There are often several different ways to solve a design problem.

Part B – Design Notes

This section contains helpful formulas, interpretations of the specifications, derivations and examples. It does not cover all sections of the specifications and it is not intended to be a commentary on the specifications. It does, however, offer guidance on how to handle frequently encountered bridge design problems.

A final word of caution is appropriate at this point! The information contained in this section should not be used as a design guide in place of reading the specifications. There may be certain instances where the methods described in this section are not appropriate for use. Therefore, it is recommended that prior to applying any formula or procedure contained within this section, the designer should read the appropriate section of the specifications to be certain that the described formula or procedure is appropriate for use.

Any errors found in this chapter, either technical or typographical in nature, should be reported to the chairman of the Caltrans Reinforced Concrete Committee.

Part A – Design Example

2.1.0 Structure Requirements

Design a reinforced concrete box girder structure with the span configuration shown below. Provide for 40 feet of clearance between Type 25 barrier rails. Assume the use of two Type 2R columns with base diameters of 4 feet. Assume $f'_c = 3.25$ ksi and $f_y = 60$ ksi.

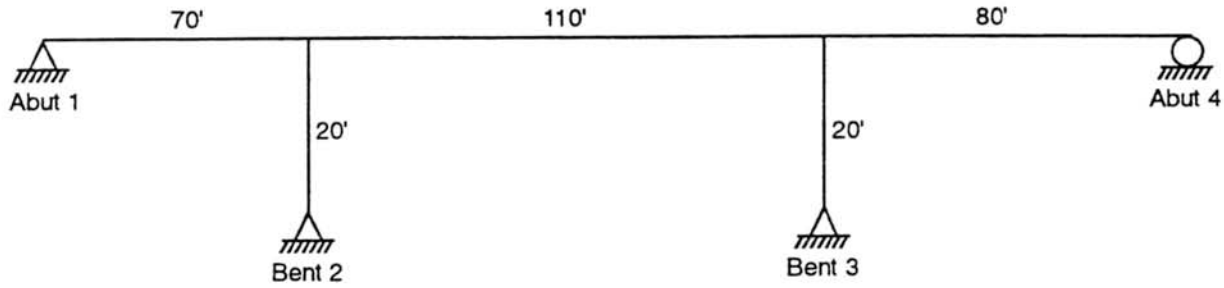

2.2.0 Typical Section Geometry

Deck width = (curb to curb clearance) + (two Type 25 barrier rails)

= 40' + 2(1.75') = 43.5'

From the *Bridge Design Aids* manual, for a reinforced concrete box girder with continuous spans, an economical design will result when

$$\frac{\text{Structure Depth}}{\text{Span}} = 0.055$$

Structure Depth = (0.055)(110') = 6.05'

Use Depth = 6'

Slope the exterior girder web for aesthetic reasons.

$$\text{Exterior web slope} = \frac{1' \text{ Horizontal}}{2' \text{ Vertical}}$$

Assume exterior web width = 10"

Assume interior web width = 8"

The exterior webs are wider to allow for easier concrete placement which is difficult due to the webs slope.

From the *Memo to Designers* manual, Memo 15 -2, the spacing between girder webs for a reinforced concrete box girder should be approximately 1½ times the structures depth.

girder spacing = (1.5)(6') = 9'

$$\frac{\text{deck width}}{\text{girder spacing}} = \frac{43.5'}{9'} = 4.83$$

Assume 4 bays @ 9' and two deck overhangs.

$$\text{Overhang length} = \frac{43.5' - 4(9') - 11.2''/12}{2} = 3.283' = 3'\text{-}3\tfrac{7}{16}''$$

Use overhangs = 3 '- 3"

Assume overhangs to be 7 inches deep at outside edge of deck and 12 inches at the intersection of the overhangs with the exterior girder web.

Effective clear span between girder webs (interior bay) = S = (9 ') – (8") = 8 '- 4"

From the *Bridge Design Details* manual, Page 8-30, when S = 8 '- 6",

deck slab depth = 8⅛ "

soffit slab depth = 6⅜ "

Soffit slab width = deck width - 2(overhang) - 2(girder slope)(girder depth)

= 43.5' – 2(3.25') – 2(½)(6' - 1') = 32'

Assume the use of two Type 2R columns at each bent.

See the *Bridge Design Details* manual, starting with Chapter 7, page 31, for standard architectural columns used by Caltrans.

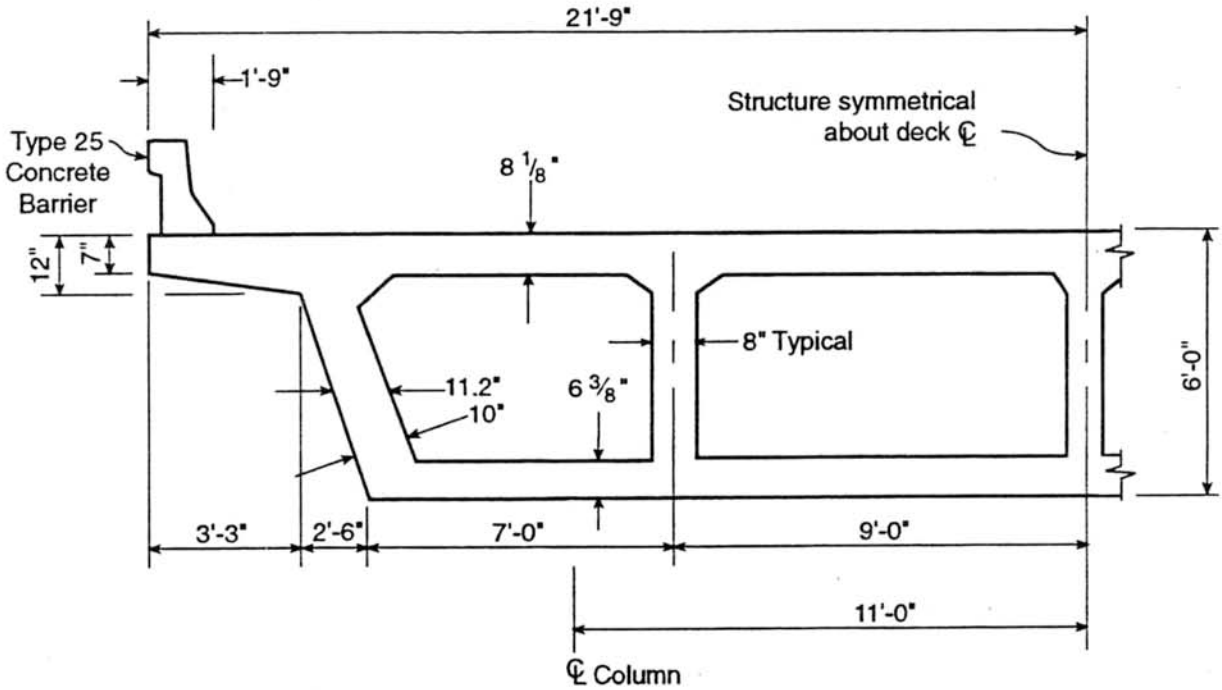
21'-9"
1'-9"
Structure symmetrical
about deck ℄
Type 25
Concrete
Barrier
8 1/8"
12"
7"
8" Typical
11.2"
10"
6 3/8"
6'-0"
3'-3"
2'-6"
7'-0"
9'-0"
11'-0"
℄ Column

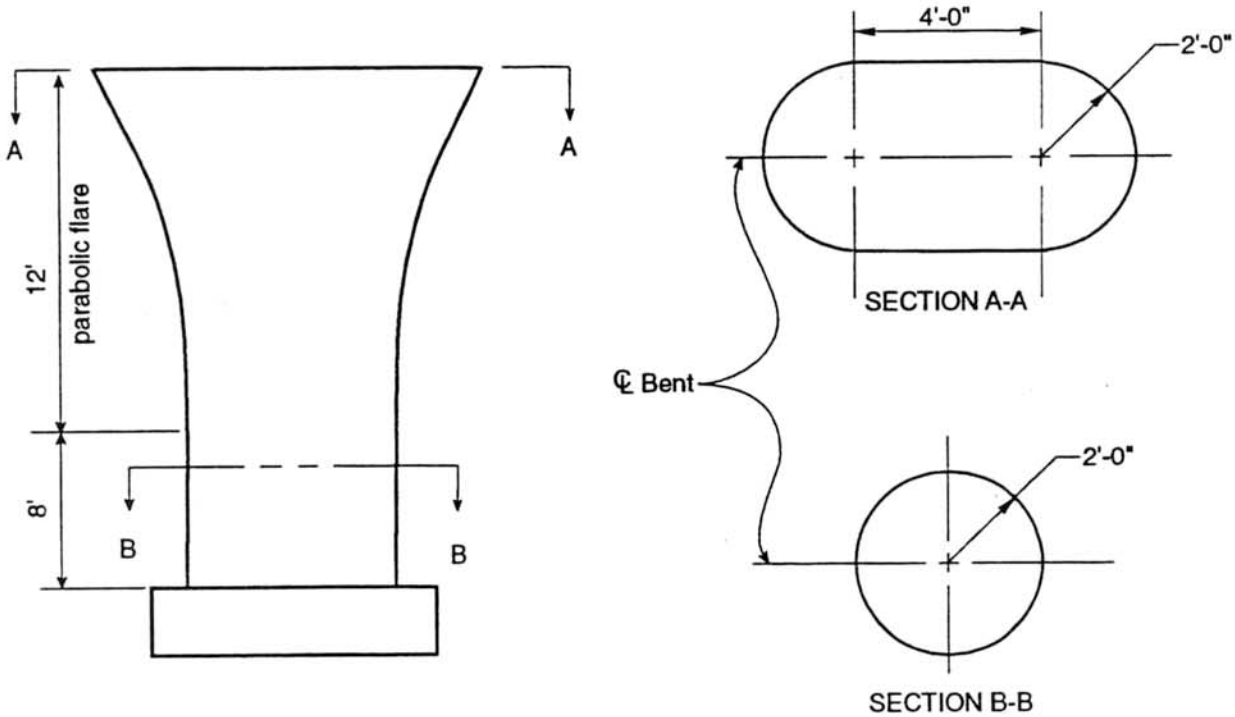
A
A
12'
parabolic flare
8'
B
B
4'-0"
2'-0"
SECTION A-A
℄ Bent
2'-0"
SECTION B-B

2.3.0 Superstructure Loads

Caltrans currently uses a program titled *"Bridge Design System"* to perform structural analysis of standard concrete box girder structures. The user is required to input the number of live load lanes which are to be loaded on the structure. The program will analyze for different truck positions along each span and also for lane loadings as described in Chapter 3 of the *Bridge Design Specifications*.

A simple way of obtaining factored results is to input more lanes into the program than actually exists. Factored results will then be output.

Design Loads to Consider (See BDS table 3.22.1A)				
Load 1	=	Service Load	=	1.0 [D+ (L+I) H]
Load 2	=	Group I_H	=	1.3 [D+1.67 (L+I) H]
Load 3	=	Group I_{pc}	=	1.3 [D+ (L+I) P]

2.3.1 Dead Loads, D

Superstructure (box) weight = 0.15 kcf

Future AC wearing surface = (43.5' - 3.5')(0.035 ksf) = 1.4 klf

Type 25 barrier rail = (2rails)(2.61cf/ft)(0.15 kcf) = 0.783 klf

Future AC plus barrier rails = 2.183 klf

2.3.2 Live Loads, L

BDS Art. 3.23.2.2 says:

> The live load bending moment for each interior stringer shall be determined by applying to the stringer the fraction of a wheel load (both front and rear wheels) determined in Table 3.23.1.

BDS Table 3.23.1 says:

> Concrete box girders are designed as whole width units. The number of wheel lines applied to a box girder structure is:

$$\frac{\text{overall deck width, feet}}{7.0}$$

Number of design live load lanes

$$= \left(\frac{43.5'}{7}\text{ wheel lines}\right)\left(\frac{1\text{ live load lane}}{2\text{ wheel lines}}\right) = 3.107\text{ live load lanes}$$

Input Data To BDS Analysis Program			
	Load 1	Load 2	Load 3
	HS20 Service	Group I_H HS20 Factored	Group I_{pc} P -Truck Factored
Superstructure DL, kcf	0.15	1.3(0.15) = 0.195	1.3(0.15) = 0.195
AC and Barrier DL, klf	2.183	1.3(2.183) = 2.838	1.3(2.183) = 2.838
#HS20 live load lanes	3.107	1.3(1.67)(3.107) = 6.745	0
#P -truck live load lanes	0	0	1.3(3.107) = 4.039

2.4.0 Effective Depth

2.4.1 Minimum bar cover (BDS Art. 8.22.1)

top deck steel = 2"

bottom slab steel = 1.5"

Note: The above cover requirements assume normal environmental conditions.

2.4.2 Transverse Bars

From Caltrans *Bridge Design Details* manual, Page 8 -30, dated June 1986, and an effective span length (clear span between girder webs) of 8' - 4" find:

top transverse bars = #6

bottom transverse bars = #4

Assume main longitudinal bars to be #11's. This is probably conservative.

$$d_{pos} = 72" - 1.5" - 0.5" - \frac{1.41}{2} = 69.3"$$

$$d_{neg} = 72" - 2" - 0.75" - \frac{1.41}{2} = 68.54"$$

Note: *Bridge Design Details* manual, page 8-30 has been updated. Future designs should be based on the current standard.

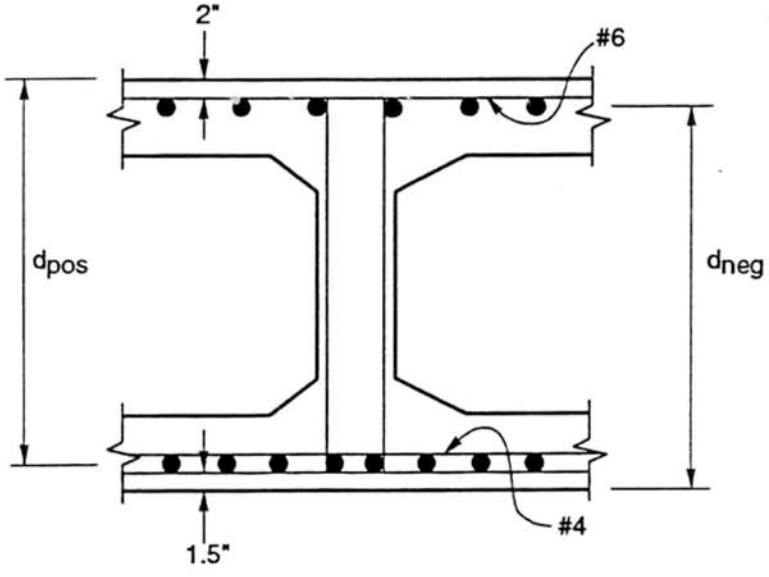

2.5.0 Factored Design Shears (D + L + I) in kips

Location	Span 1	Span 2	Span 3
0.0	906 P	1701 P	1579 P
0.1	693 P	1382 P	1349 P
0.2	509 H	1067 P	1114 P
0.3	329 H	749 P	880 P
0.4	154 H / – 274 H	470 H / -IH	660 H
0.5	– 456 H	– 243 H	467 H
0.6	– 635 H	– 488 H	270 H / – 175 H
0.7	– 841 P	– 765 P	– 367 H
0.8	– 1043 P	– 1082 P	– 566 P
0.9	– 1247 P	– 1398 P	– 791 P
1.0	– 1456 P	– 1717 P	– 1036 P

See pages 2-71 and 2-76

2.6.0 Girder Web Flares

assume $V_c = 2\sqrt{f'_c}\, b_w d$ (BDS Art. 8.16.6.2.1)

maximum usable $V_s = 8\sqrt{f'_c}\, b_w d$ (BDS Art. 8.16.6.3.9)

maximum allowable $V_u = 10\phi\sqrt{f'_c}\, b_w d$

$b_w \geq \dfrac{V_u}{10\phi\sqrt{f'_c}\, d}$ is required.

$\phi = 0.85$

$f'_c = 3250$ psi

$d = 68.54$ "

$b_w = 2(10") + 3(8") = 44"$ (initial assumption)

maximum allowable $V_u = 10(0.85)\sqrt{3250}\,(44)(68.54)\left(\dfrac{1\text{kip}}{1000\text{lb}}\right) = 1461$ k

Maximum design shears, V_u, may be assumed to be the shears which occur at a distance d from the face of abutment and bent cap supports. (BDS Art. 8.16.6.1.2)

At the abutments, this point occurs at;

$$1.25' + \frac{68.54"}{12} = 6.96' \text{ from abutment center lines.}$$

At bents, this point occurs at;

$$2.25' + \frac{68.54"}{12} = 7.96' \text{ from bent center lines.}$$

Referring to the table of factored design shears, it is seen that the maxium design shears for spans 1 and 3 will never exceed the maximum allowable design shear of V_u = 1461 k. For Span 2, design shears must be calculated at 7.96 feet from the bent center lines to determine if web flares will be required.

$$\text{Bent 2: } V_u = 1701 - \frac{7.96}{11}(1701 - 1382) = 1470 \text{ k} > 1461 \text{ k}$$

$$\text{Bent 3: } V_u = -1717 + \frac{7.96}{11}(1717 - 1398) = -1486 \text{ k} > 1461 \text{ k}$$

Web flares are required at both ends of Span 2.

Determine total web width required at the face of the bent caps. By observation it is recognized that it will be appropriate to calculate flare requirements at Bent 3 and apply the requirements to both bents.

$$\text{Bent 3 cap face: } V_u = -1717 + \frac{2.25}{11}(1717 - 1398) = -1652 \text{ k}$$

$$\text{require that } b_w \geq \frac{V_u}{10\phi\sqrt{f'_c}d} = \frac{1652(1000\text{lb/k})}{10(0.85)\sqrt{3250}(68.54)}$$

require $b_w \geq 49.7"$

Use b_w = 10" for each web at the cap face.

Total b_w = 50" for the whole box girder.

Determine the required length of flare. The webs must begin to flare at the point in the span where:

V_u = maximum allowable V_u = 1461 k

Let x = minimum distance from support center line to start of web flare.

$$V_u = 1461 = 1717 - \frac{x}{11}(1717 - 1398)$$

$$x = 8.83'$$

Required flare length = 8.83' – 2.25' = 6.58'

Minimum required flare length = 12(difference in web thickness) (BDS Art. 8.11.3)

= 12(10" – 8") = 2'

Use flare length = 7'

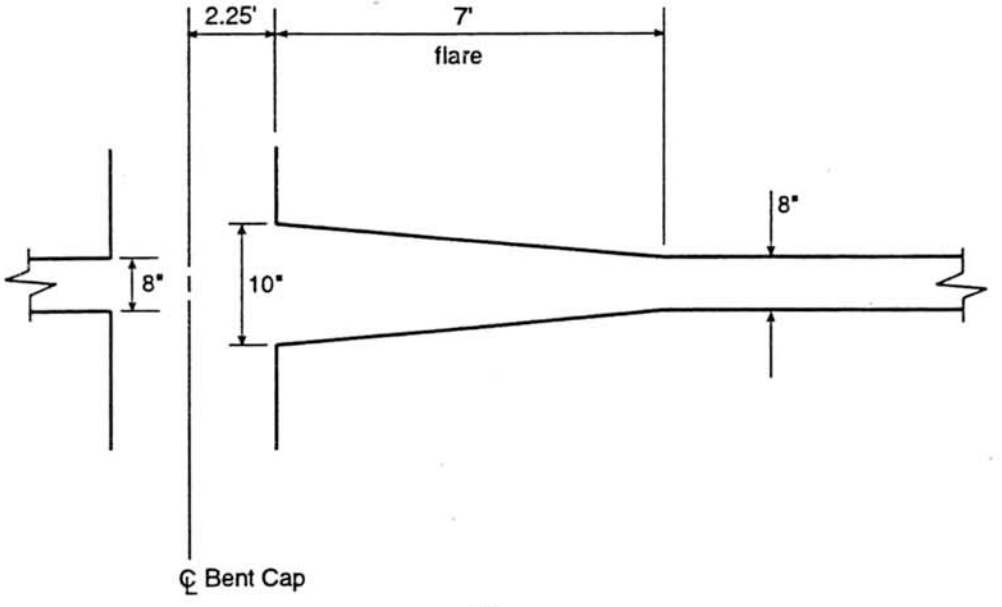

Plan

Bent 2 – Typical Interior Girder (Bent 3 is similar)

2.7.0 Factored Design Moments (D + L + I) in k-ft

Location		Positive	Negative
Span 1	0.0	0	
	0.1	5240 P	
	0.2	8669 H	
	0.3	10394 H	
	0.4	10777 P	1196 P
	0.5	9658 H	– 436 P
	0.6	7301 H	– 2841 P
	0.7	3522 H	– 6018 P
	0.8	–1487 H	– 9968 P
	0.9		– 14690 P
	1.0		– 22476 P
Span 2	0.0		–25319 P
	0.1	– 4439 H	– 9835 P
	0.2	4548 H	– 1327 P
	0.3	12358 P	3717 P
	0.4	17525 P	
	0.5	19126 P	
	0.6	17364 P	
	0.7	12027 P	2585 P
	0.8	3931 H	– 2860 P
	0.9	– 5519 H	– 10936 P
	1.0		– 26386 P
Span 3	0.0		– 24568 P
	0.1		– 14598 P
	0.2	– 665 H	– 8940 P
	0.3	5515 P	– 4291 P
	0.4	10405 P	– 651 P
	0.5	13366 P	1980 P
	0.6	14529 P	
	0.7	13814 P	
	0.8	11069 P	
	0.9	6831 P	
	1.0	0	

See pages 2-70 and 2-75

2.8.0 Maximum Design Moments

Moments at faces of support may be used for negative moment design. (BDS Art. 8.8.2)

Bent 2

Span 1 side of cap: $M_u = -22476 + \frac{2}{7}(22476 - 14690) = -20252$ k-ft

Span 2 side of cap: $M_u = -25319 + \frac{2}{11}(25319 - 9835) = -22504$ k-ft

Bent 3

Span 2 side of cap: $M_u = -26386 + \frac{2}{11}(26386 - 10936) = -23577$ k-ft

Span 3 side of cap: $M_u = -24568 + \frac{2}{8}(24568 - 14598) = -22076$ k-ft

Location		Design Moment
Span 1	0.4	10777 k-ft
Span 2	0.5	19126
Span 3	0.6	14529
Bent 2		– 22504
Bent 3		– 23577

2.9.0 Steel Requirements at Maximum Moment Sections

2.9.1 Positive Moment Section Parameters

$b = 43.5' = 522''$

$b_w = 10 + 8 + 8 + 8 + 10 = 44''$

$h_f = 8.125''$

$d = 69.3''$

$\phi = 0.9$

2.9.2 Span 1 0.4 point, M_u = 10777 k-ft (Solution Method 1)

assume $a \le h_f$ (i.e., section is rectangular in nature)

require $\phi M_n \ge M_u$

$$\phi M_n = \phi A_s f_y\left(d - \frac{a}{2}\right) \quad \text{where} \quad a = \frac{A_s f_y}{.85 f_c' b}$$ (BDS Art. 8.16.3.2.1)

set $$\phi A_s f_y\left(d - \frac{a}{2}\right) = M_u$$

$$\phi A_s f_y\, d - \phi A_s f_y \frac{A_s f_y}{1.7 f_c' b} = M_u$$

$$\left(\frac{\phi f_y^{\,2}}{1.7 f_c' b}\right) A_s^2 - (\phi f_y d) A_s + M_u = 0$$

$$1.123 A_s^2 - 3742 A_s + (10777)(12) = 0$$

This is a quadratic equation which can be solved for A_s.

$A_s = 34.93\ \text{in}^2$

check that $a \le h_f$

$$a = \frac{A_s f_y}{.85 f_c' b} = 1.45'' < 8.125''$$ okay

Required $A_s = 34.93\ \text{in}^2$

2.9.3 Span 2 0.5 point, M_u = 19126 k-ft (Solution Method 2)

assume $a \le h_f$

set $$\phi A_s f_y\left(d - \frac{a}{2}\right) = M_u$$

The above equation can be solved algebraically to yield a direct solution for A_s:

$$A_s = \frac{z}{2}\left[1 - \sqrt{1 - \frac{4M_u}{\phi f_y d z}}\right] \qquad \text{where } z = \frac{1.7 f_c' b d}{f_y}$$

Units for all variables must be consistent.

$$z = \frac{1.7(3.25)(522)(69.3)}{60} = 3331 \text{ in}^2$$

$$A_s = \frac{3331}{2}\left[1 - \sqrt{1 - \frac{4(19126)(12)}{(0.9)(60)(69.3)(3331)}}\right] = 62.50 \text{ in}^2$$

check that $a \le h_f$

$$a = \frac{A_s f_y}{.85 f_c' b} = 2.60" < 8.125" \qquad \text{okay}$$

Required $A_s = 62.50 \text{ in}^2$

2.9.4 Span 3 0.6 point, M_u = 14529 k-ft (Solution Method 3)

assume $a \le h_f$

$$\text{set} \quad \phi A_s f_y\left(d - \frac{a}{2}\right) = M_u \quad \text{where } a = \frac{A_s f_y}{.85 f_c' b}$$

Restate the above equations in a different form:

$$a = \frac{A_s f_y}{.85 f_c' b} \qquad A_s = \frac{M_u}{\frac{\phi f_y}{2}(2d - a)}$$

$$a = 0.04161 A_s \qquad A_s = \frac{M_u}{2.25(138.6 - a)}$$

For the above equations, a = inches, M_u = k-ft

Start with an assumed value of a. Then iterate between equations.

a = 4" (initial assumption)	A_s = 47.97 in^2
a = 1.996"	A_s = 47.27 in^2
a = 1.967"	A_s = 47.26 in^2
a = 1.967"	A_s = 47.26 in^2
a = 1.967" < 8.125"	okay

Required $A_s = 47.26 \text{ in}^2$

2.9.5 Negative Moment Section Parameters

$b = 32' = 384"$

$b_w = 44"$ (web flares have been neglected)

$h_f = 6.375"$

$d = 68.54"$

$\phi = 0.9$

2.9.6 Bent 2, M_u = -22504 k-ft

Assume $a \leq h_f$

Require $\phi M_n \geq M_u$

Use one of previous methods to solve for A_s.

$A_s = 75.30 \text{ in}^2$ $a = 4.26" < 6.375"$

Required $A_s = 75.30 \text{ in}^2$

2.9.7 Bent 3, M_u = -23577 k-ft

Solve the same as for Bent 2.

Required $A_s = 79.02 \text{ in}^2$ $a = 4.47" < h_f$

2.10.0 Maximum Allowed Tension Steel (BDS Art. 8.16.3.1.1)

$\rho = \frac{A_s}{bd}$ and ρ_b = balanced reinforcement ratio.

Maximum allowed $\rho = 0.75\ \rho_b$

From the above equations and BDS Art. 8.16.3.3, it can be found that for a flanged section with the neutral axis below the flange,

$$\text{maximum allowed } A_s = \frac{0.6375 f'_c}{f_y}\left[\beta_1 b_w d\left(\frac{87000}{87000 + f_y}\right) + (b - b_w)h_f\right]$$

2.10.1 Maximum Tension Steel in the Soffit Slab

f'_c = 3250 psi
f_y = 60,000 psi
β_1 = 0.85
b = 522"
b_w = 44"
h_f = 8.125"
d = 69.3"
maximum allowed A_s = 187.08 in^2

2.10.2 Maximum Tension Steel in the Deck Slab

f'_c = 3250 psi
f_y = 60,000 psi
β_1 = 0.85
b = 384"
b_w = 44" (Note: Do not include web flares here)
h_f = 6.375"
d = 68.54"
Maximum allowed A_s = 127.23 in^2

2.11.0 Effective Tension Flange Width (BDS Art. 8.17.2.1)

2.11.1 Span 2 - Positive Moment Tension Flange Width (soffit slab)

Exterior Girder:

6t = 6 (6.375") = 38.25" $\frac{1}{12}$ L = $\frac{1}{12}$ (110') = 110" $\frac{1}{2}$ L $_{clr}$ = $\frac{1}{2}$ (70") = 35"	10" + 35" = 45"	45"
$\frac{1}{10}$ L = $\frac{1}{10}$ (110') = 132"		

First Interior Girder:

6t = 6 (6.375") = 38.25" $\frac{1}{2}$ L $_{clr\ left}$ = $\frac{1}{2}$ (70") = 35" $\frac{1}{2}$ L $_{clr\ right}$ = $\frac{1}{2}$ (100") = 50"	35" + 8" + 38.25" = 81.25"	81.25"
$\frac{1}{10}$ L = $\frac{1}{10}$ (110') = 132"		

Second Interior Girder:

6t = 6 (6.375") = 38.25" $\frac{1}{2}$ L $_{clr}$ = $\frac{1}{2}$ (100") = 50"	38.25" + 8" + 38.25" = 84.5"	84.5"
$\frac{1}{10}$ L = $\frac{1}{10}$ (110') = 132"		

Total effective tension flange width.

= 45" + 81.25" + 84.5" + 81.25" + 45" = 337"

Note: Calculations for spans 1 and 3 are similar.

2.11.2 Bent 3 - Negative Moment Tension Flange Width (deck slab)

Exterior Girder:

6t	= 6 (8.125")	= 48.75"	39" + 10" + 48.75" = 97.75"	97.75"
overhang	= 39"			
$\frac{1}{2}$ L $_{clr}$	= $\frac{1}{2}$ (99")	= 49.5"		
$\frac{1}{10}$ L	= $\frac{1}{10}$ (110')	= 132"		

First Interior Girder:

6t	= 6 (8.125")	= 48.75"	48.75" + 10" + 48.75" = 107.5"	107.5"
$\frac{1}{2}$ L $_{clr\ left}$	= $\frac{1}{2}$ (99")	= 49.5"		
$\frac{1}{2}$ L $_{clr\ right}$	= $\frac{1}{2}$ (98")	= 49"		
$\frac{1}{10}$ L	=$\frac{1}{10}$ (110')	= 132"		

Second Interior Girder:

6t	= 6 (8.125")	= 48.75"	48.75" +10" + 48.75"= 107.5"	107.5"
$\frac{1}{2}$ L $_{clr}$	= $\frac{1}{2}$ (98")	= 49"		
$\frac{1}{10}$ L	=$\frac{1}{10}$ (110')	= 132"		

Total effective tension flange width

= 97.75" + 107.5" + 107.5" + 107.5" + 97.75" = 518"

Note: According to BDS Art. 8.17.2.1.3, an effective tension flange width shall be calculated on each side of the bent cap. The larger of the two effective widths shall be used. Upon inspection it can be seen that the 518 inch width calculated above will control.

Location		Design Moment, M_u	A_s Requirement	Effective Tension Flange
Span 1	0.4	10777 k-ft	34.93 in^2	336.5"
Span 2	0.5	19126	62.50	337
Span 3	0.6	14529	47.26	337
Bent 2		– 22504	75.30	518
Bent 3		– 23577	79.02	518

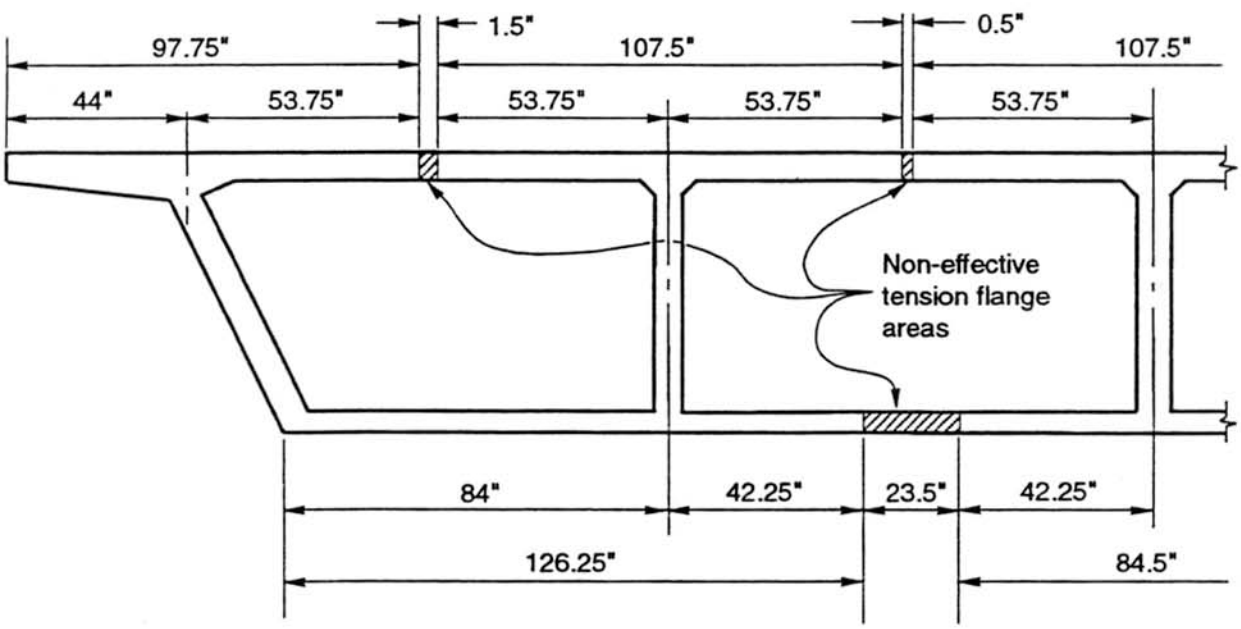

All main tension steel bars shall be distributed within the effective tension flange areas.

2.12.0 Positive Moment Bar Size Limitation (BDS Art. 8.24.2.3)

Requirement at simple supports and points of inflection:

$$\ell_d \leq \frac{M_n}{V_u} + \ell_a$$

2.12.1 Span 2 Inflection Points

Inflection points occur at 0.15 and 0.85 points of Span 2. (See moment envelope, page 2-33)

at 0.15 point, $V_u = 1382 - \frac{1}{2}(1382 - 1067) = 1225$ k

at 0.85 point, $V_u = -1398 + \frac{1}{2}(1398 - 1082) = -1240$ k

at 0.5 point, $M_u = 19126$ k-ft $\leq \phi M_n$

$$M_n \geq \frac{19126}{0.9} = 21251 \text{ k-ft}$$

At least ¼ of the steel present at the 0.5 point of Span 2 must be extended into the bent caps. (BDS Art. 8.24.2.1)

Therefore, it is safe to assume that the moment capacity at the inflection points is at least:

$M_n = \frac{1}{4}(21251) = 5313$ k-ft.

ℓ_a = greater of d or 12 d_b at points of inflection

ℓ_a = [69.3" or 12 (1.41) = 16.9"] for #11 bars = 69.3"

ℓ_d = 66" for #11 bars

$$\frac{M_n}{V_u} + \ell_a = \frac{5313}{1240}(12) + 69.3" = 121" > \ell_d = 66"$$

Any bar size #11 or smaller may be used for positive moment steel in Span 2.

2.12.2 Span 3 Inflection Point

The inflection point occurs at 0.2 point of Span 3. (see page 2-36)

at 0.2 point, $V_u = 1114$ k

at 0.6 point, $M_u = 14529$ k-ft $\leq \phi M_n$

$$M_n \geq \frac{14529}{0.9} = 16143 \text{ k-ft}$$

At least ¼ of the steel present at the 0.6 point of Span 3 must be extended to the bent cap. (BDS Art. 8.24.2.1)

Assume at 0.2 point, $M_n = \frac{1}{4}(16143) = 4036$ k-ft.

$\ell_a = 69.3"$

$\ell_d = 66"$

$$\frac{M_n}{V_u} + \ell_a = \frac{4036}{1114}(12) + 69.3" = 113" > \ell_d = 66"$$

2.12.3 Span 3 Abutment

at the abutment, $V_u = -1036$ k

at 0.6 point, $M_u = 14529$ k-ft $\leq \phi M_n$

$$M_n = \frac{14529}{0.9} = 16143 \text{ k-ft}$$

At least $\frac{1}{3}$ of the steel present at the 0.6 point of Span 3 must be extended to the abutment. (BDS Art. 8.24.2.1)

Assume at the abutment, $M_n = \frac{1}{3}(16143) = 5381$ k-ft

ℓ_a = embedment length beyond support center line.

$\ell_a = (1' - 3") - 3" = 12"$

$\ell_d = 66"$

$$\frac{M_n}{V_u} + \ell_a = \frac{5381}{1036}(12) + 12" = 74" > \ell_d = 66"$$

Any bar size #11 or smaller may be used for positive moment steel in Span 3.

2.13.0 Crack Control (Pre-Design) (BDS Art. 8.16.8.4)

The following procedure can be used to find out how many tension bars should be used to satisfy crack control requirements. If an existing design is to be checked for crack control, do not use this procedure. Also, please note that this procedure is only valid if all of the tension bars are the same size (see pages 2-121 thru 2-129).

d_c = distance from extreme concrete tension fiber to center of the closest tension bar.

A_s = area of tension steel required to meet strength design requirements.

A_b = area of one tension bar.

A_e = effective area of concrete in tension which surrounds the tension steel and has the same centroid as the tension steel.

z = crack control factor (see specifications).

f_s = working stress in tension steel at service loads.

n_{sd} = number of bars required to satisfy strength design.

n_{cc} = number of bars required to satisfy crack control allowable stress formula, $f_s = z / (d_c A)^{\frac{1}{3}}$.

n_{24} = number of bars required to create stresses in the tension steel of 24 ksi.

n_{36} = number of bars required to create stresses in the tension steel of 36 ksi.

n = minimum number of bars required

f_y = 60 ksi is assumed.

1. Calculate required A_s for the factored moment, M_u.
2. Calculate f_s assuming A_s = amount of tension steel present. Use working stress analysis and service load moments, D+(L+I)H.
3. Calculate $n_{sd} = \dfrac{A_s}{A_b}$
4. If $f_s \leq 24$ ksi, use $n = n_{sd}$.
5. Calculate d_c, A_e, and $T = A_s f_s$

   $A_e = (b_t) \times \text{lesser of} \begin{cases} 2d_c \\ h_t \end{cases}$

   where h_t = thickness of tension flange

   b_t = effective tension flange width

   * This definition of A_e is only good if all tension bars are in a single layer.

6. Calculate $n_{cc} = \left[\left(\dfrac{T}{zA_b}\right)^3 d_c A_e\right]^{\frac{1}{4}}$

   $$n_{24} = \frac{T}{24A_b}$$

   $$n_{36} = \frac{T}{36A_b}$$

7. If $n_{cc} > n_{24}$ use n = larger of n_{24} or n_{sd}

   If $n_{24} > n_{cc} > n_{36}$ use n = larger of n_{cc} or n_{sd}

   If $n_{cc} < n_{36}$ use n = larger of n_{36} or n_{sd}

Service Load Moments (D + L + I) H in k-ft

Location		Positive	Negative
Span 2	0.0		– 14408
	col. face*		– 12903
	0.1		– 6132
	0.5	10669	
	0.9		– 7069
	col. face*		– 14006
	1.0		– 15547
Span 3	0.0		– 14670
	col.face*		– 13198
	0.1		– 8782
	0.6	8359	

See page 2-83

*Calculate moments at column support faces.

Bent 2: $M = -14408 + \frac{2}{11}(14408 - 6132) = -12903$ k-ft

Bent 3: $M = -15547 + \frac{2}{11}(15547 - 7069) = -14006$

$M = -14670 + \frac{2}{8}(14670 - 8782) = -13198$

Calculate f_s at each section using required A_s from strength design calculations (see page 2-119).

	0.5 Span 2	0.6 Span 3	Bent 2 Rt	Bent 3 Lt	Bent 3 Rt
b	522"	522	384	384	384
b_w	44 "	44	50	50	44
h_f	8.125 "	8.125	6.375	6.375	6.375
n	9	9	9	9	9
A_s	62.5 in²	47.26	75.30	79.02	79.02
d	69.3 in²	69.3	68.54	68.54	68.54
M	10669 k-ft	8359	–12903	–14006	–13198
f_s	31.08 ksi	32.09	31.58	32.69	30.78

2.13.1 Span 2 0.5 point - #9 bars only

$A_s = 62.5\ in^2$ $f_s = 31.08$ ksi $T = A_s f_s = (62.5)(31.08) = 1943$ k

b_t = effective tension flange width = 337"

$d_c = 1.5 + 0.5 + 1.128/2 = 2.57"$

$2d_c = 5.14"$

$h_t = 6.375"$

$A_e = (b_t)(\text{lesser of } 2d_c \text{ and } h_t) = (337)(5.14) = 1732\ in^2$

z = 170 for normal enviromental conditions

$$n_{sd} = \frac{A_s}{A_b} = \frac{62.5}{1.0} = 63$$

$$n_{cc} = \left[\left(\frac{T}{zA_b}\right)^3 d_c A_e\right]^{\frac{1}{4}} = \left[\left(\frac{1943}{(170)(1.0)}\right)^3 (2.57)(1732)\right]^{\frac{1}{4}} = 51$$

$$n_{24} = \frac{T}{24A_b} = \frac{1943}{(24)(1.0)} = 81$$

$$n_{36} = \frac{T}{36A_b} = \frac{1943}{(36)(1.0)} = 54$$

$n_{cc} < n_{36}$

Therefore, n = larger of n_{36} or n_{sd} = 63

	Span 2		0.5 point
	A_s = 62.5		f_s = 31.08
	T =1943		z = 170
	h_t = 6.375		b_t = 337
Bar	#9	#10	#11
A_b	1.0	1.27	1.56
d_c	2.57	2.64	2.70
$2d_c$	5.14	5.28	5.40
A_e	1732	1779	1820
n_{sd}	63	50	40
n_{cc}	51	43	38
n_{24}	81	64	52
n_{36}	54	43	35
n	63	50	40

Span 3		0.6 point
A_s = 47.26		f_s = 32.09
T = 1517		z = 170
h_t = 6.375		b_t = 337
#9	#10	#11
1.0	1.27	1.56
2.57	2.64	2.70
5.14	5.28	5.40
1732	1779	1820
48	38	31
43	36	31
64	50	41
43	34	27
48	38	31

	Bent 2		Right
	A_s = 75.30		f_s = 31.58
	T = 2378		z = 170
	h_t = 8.125		b_t = 518
Bar	#9	#10	#11
A_b	1.0	1.27	1.56
d_c	3.31	3.39	3.46
$2d_c$	6.62	6.78	6.92
A_e	3429	3512	3585
n_{sd}	76	60	49
n_{cc}	75	64	55
n_{24}	99	78	64
n_{36}	66	52	43
n	76	64	55

Bent 3		Left
A_s = 79.02		f_s = 32.69
T = 2583		z = 170
h_t = 8.125		b_t = 518
#9	#10	#11
1.0	1.27	1.56
3.31	3.39	3.46
6.62	6.78	6.92
3429	3512	3585
79	63	51
80	68	59
108	85	69
72	57	46
80	68	59

2.14.0 Bar Spacing Limits

2.14.1 Minimum bar spacing (BDS Art. 8.21.1)

$$\text{greater of} \begin{cases} 1.5\ d_b = 1.5(1.41") & = 2.12" \\ 1.5\ (\text{aggregate size}) & = 1.5\ (1") = 1.5" \\ 1.5" \end{cases}$$

Minimum bar spacing = 2.12" assuming use of #11 bars.

2.14.2 Maximum bar spacing (BDS Art. 8.21.6)

$$\text{lesser of} \begin{cases} 1.5\ (\text{slab thickness}) & = 1.5\ (8.125") & = 12.2" \text{ for top slab} \\ & = 1.5\ (6.375") & = 9.56" \text{ for bottom slab} \\ 18" \end{cases}$$

Maximum spacing = 12.2" for the top slab

= 9.56" for the bottom slab

2.14.3 Minimum Number of Bars Required

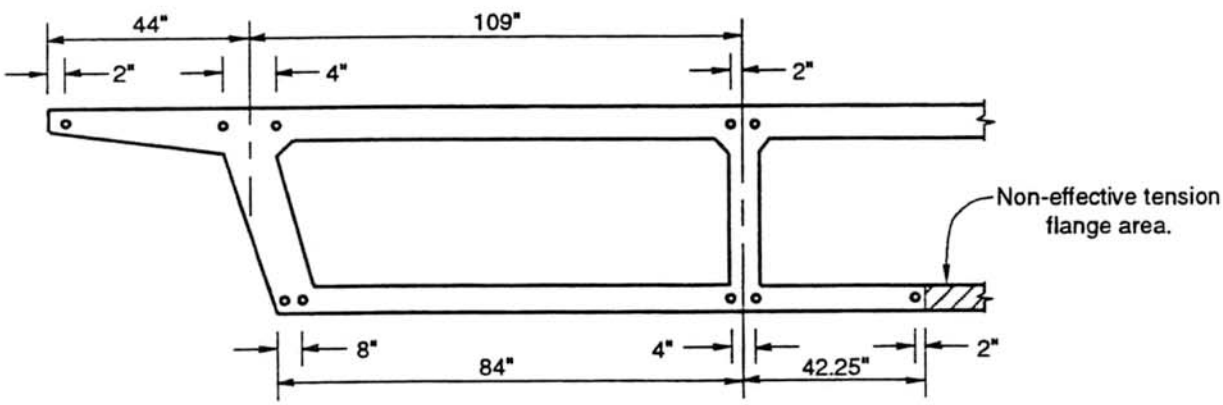

Top slab, 44 inch section $\frac{44"-2"-2"}{12.2"} = 3.3$ spaces required between bars shown.

5 bars required

Top slab, 109" section $\frac{109" - 2" - 2"}{12.2"} = 8.6$ spaces

10 bars required

Bottom slab, 84" section $\frac{84" - 8" - 2"}{9.56"} = 7.7$ spaces

10 bars required

Bottom slab, 42.25" section $\frac{42.25" - 2" - 2"}{9.56"} = 4$ spaces

5 bars required

Note: The 2 inch, 4 inch, and 8 inch dimensions on the above figure are only approximations.

2.15.0 Minimum Reinforcement Requirements (BDS Art. 8.17.1)

A minimum design strength is required at any section where tension reinforcement is required.

$$\text{minimum } \phi M_n = 1.2M_{cr} = 9\sqrt{f'_c}\,\frac{I_g}{y_t}$$ (BDS Art. 8.17.1.1)

From the BDS frame analysis output;

$I_g = I_{gross} = I_{zz} = 363.38 \text{ ft}^4$

$y_t = 3.49'$ for positive moments.

Modify the design moment envelope as follows;

For positive moments

$$\text{minimum } M_u = 9\sqrt{3250}\left(\frac{363.38\text{ft}^4}{3.49\text{ft}}\right)\left(\frac{144\,\text{in}^2/\text{ft}^2}{1000\,\text{lb/k}}\right) = 7693 \text{ k-ft}$$

For negative moments

$$\text{minimum } M_u = 9\sqrt{3250}\left(\frac{363.38\text{ft}^4}{6-3.49\text{ft}}\right)\left(\frac{144\,\text{in}^2/\text{ft}^2}{1000\,\text{lb/k}}\right) = 10697 \text{ k-ft}$$

The minimum design moment requirements above may be waived if the steel provided at a section is one third greater than that required due to the applied factored moment, M_u (BDS Art. 8.17.1.2)

For example, if $M_u = 90$ k-ft (factored D + L + I), then it is acceptable to design for an adjusted M_u value of $M_u = 90 + \frac{1}{3}(90) = 120$ k-ft

2.16.0 Bar Layout, Span 2 - Positive Moment

Try #10 bars $n = 50$

Effective tension flange = 337"

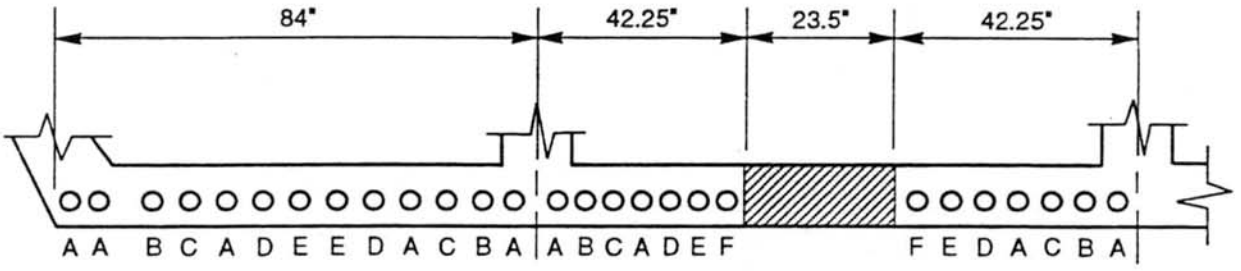

$\frac{84}{337}(50) = 12.5 \rightarrow$ try 13 bars in 84" flange section.

$\frac{42.25}{337}(50) = 6.3 \rightarrow$ try 7 bars in 42.25" flange section

Total number of bars = 2(13 + 7 + 7) = 54

Extend at least ¼ (54) = 13.5 bars into bent caps. (BDS Art. 8.24.2.1)

2.16.1 Choose Bar Groups

Bars have been tentatively layed out as shown in the above diagram. It is assumed that the A bars will extend into the bent caps. The A bars within the girder webs will be continuous.

Bar Type	No.	Groups	A_s	ϕM_n
A	18	18	22.86 in²	7086 k-ft
B	8	26	33.02	10204
C	8	34	43.18	13303
D	8	42	53.34	16382
E	8	50	63.50	19442
F	4	54	68.58	20964

Draw the factored design moment envelope. Modify the envelope to meet minimum A_s requirements of BDS Art. 8.17.1. Draw lines representing ϕM_n for each bar group.

Mark off bar extensions in accordance with BDS Art. 8.24.1.2.1.

Check that all bars extend past the moment envelope at least a distance equal to development length, ℓ_d, in accordance with BDS Art. 8.24.1.2.2.

Measure, in feet, the distance from the span center line to the ends of each bar group.

Match bar ends to reduce the number of different bar lengths required in the field. Keep in mind that 60 feet is the longest practical bar length available. Anything longer will require splicing. Try to keep splicing to a minimum.

5 + 5 = 10			4 bars 5 + 5 = 10'	F
20 + 37 = 57			8 bars 21 + 37 = 58'	C
27 + 31 = 58	→	Use	8 bars 27 + 31 = 58'	E
31 + 26 = 57			8 bars 31 + 27 = 58'	D
38 + 20 = 58			8 bars 38 + 20 = 58'	B
continuous			18 bars continuous	A

Provide reinforcement in noneffective tension flange areas. (BDS Art. 8.17.2.1.1)

required area = (0.4%)(6.375")(23.5") = 0.60 in^2

Place one #7 bar at the center of the noneffective areas.

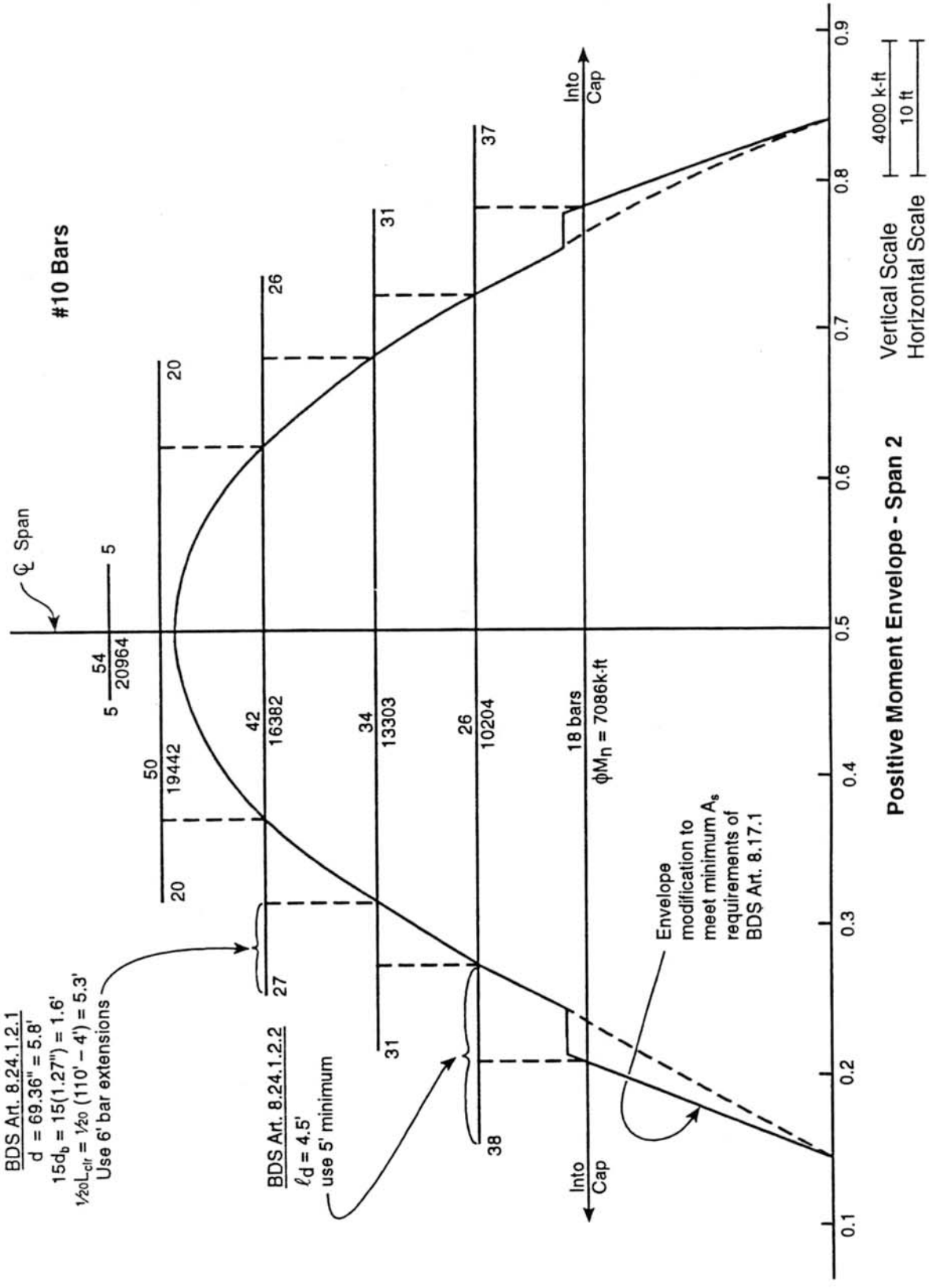
#10 Bars
℄ Span
5
5
54
20964
5
50
19442
20
20
42
16382
26
26
34
13303
31
31
26
10204
37
38
18 bars
ϕM_n = 7086k-ft
Into Cap
Into Cap
BDS Art. 8.24.1.2.1
d = 69.36" = 5.8'
$15d_b$ = 15(1.27") = 1.6'
$1/20 L_{clr}$ = 1/20 (110' – 4') = 5.3'
Use 6' bar extensions
BDS Art. 8.24.1.2.2
ℓ_d = 4.5'
use 5' minimum
27
31
Envelope modification to meet minimum A_s requirements of BDS Art. 8.17.1
0.1
0.2
0.3
0.4
0.5
0.6
0.7
0.8
0.9
Positive Moment Envelope - Span 2
Vertical Scale 4000 k-ft
Horizontal Scale 10 ft

2.17.0 Bar Layout, Span 3 – Positive Moment

Try #10 bars n = 38

Effective tension flange = 337"

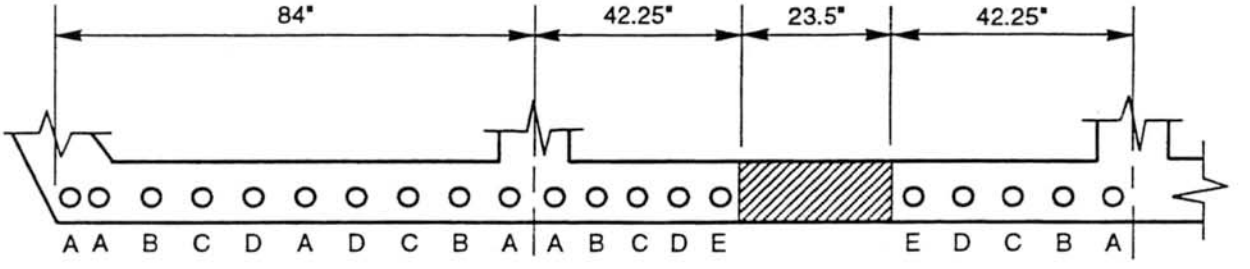

$\frac{84}{337}(38) = 9.5 \rightarrow$ try 10 bars in 84" flange sections.

$\frac{42.25}{337}(38) = 4.8 \rightarrow$ try 5 bars in 42.25" flange sections.

Total number of bars = 2(10 + 5 + 5) = 40

Extend at least ¼ (40) = 10 bars into bent cap. (BDS Art. 8.24.2.1)

Extend at least ⅓ (40) = 13.3 bars into abutment (BDS Art. 8.24.2.1)

2.17.1 Choose bar groups

Bar Type	No.	Groups	A_s	ϕM_n
A	12	12	15.24 in^2	4735 k-ft
B	8	20	25.40	7867
C	8	28	35.56	10980
D	8	36	45.72	14074
E	4	40	50.80	15614

Perform graphical procedures as was done for Span 2. Match bar lengths.

3 + 20 = 23'			4 bars 3 + 20 = 23'
13 + 41 = 54'			8 bars 15 + 41 = 56'
19 + 37 = 56'	→	Use	8 bars 19 + 37 = 56'
26 + 30 = 56'			8 bars 26 + 30 = 56'
continuous			12 bars continuous

Place one #7 bar at the center of the noneffective area.

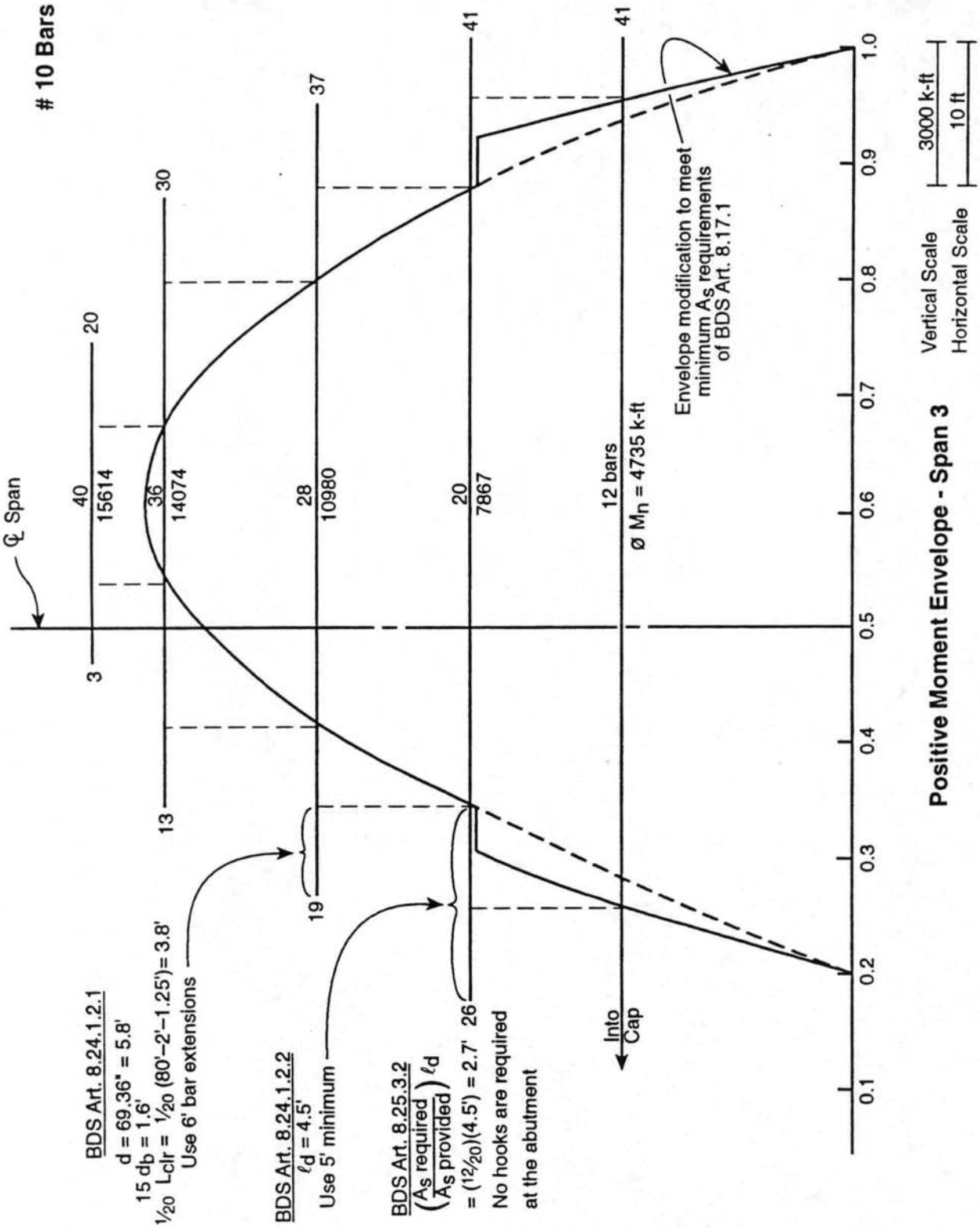

Positive Moment Envelope - Span 3

2.18.0 Bar Layout, Bent 3 - Negative Moment

Try #10 bars n = 68

Effective tension flange = 518"

The non-effective tension flange regions are very small. Consider the full 522 inch flange width for distribution of the tension steel.

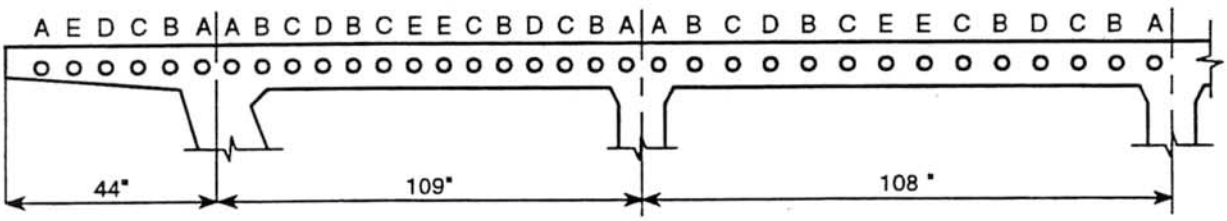

$\frac{44}{522}(68) = 5.7$ → try 6 bars in 44" overhangs.

$\frac{109}{522}(68) = 14.2$ → try 14 bars in each bay.

Total number of bars = 2 (6 + 14 + 14) = 68

Extend at least ⅓ (68) = 22.7 bars beyond inflection point. (BDS Art. 8.24.3.3)

2.18.1 Choose bar groups

Bar Type	No.	Groups	A_s	ϕM_n
A	12	12	15.24 in^2	4675 k-ft
B	18	30	38.10	11578
C	10	40	50.80	15356
D	10	50	63.50	19092
E	18	68	86.36	25714

Perform graphical procedures similar to those done for Spans 1 and 2. Match bar lengths.

35 + 10 = 45			18 bars 35 + 10 = 45'
11 + 42 = 53	→	Use	18 bars 11 + 42 = 53'
17 + 14 = 31			10 bars 17 + 15 = 32'
14 + 18 = 32			10 bars 14 + 18 = 32'
continuous			12 bars continuous

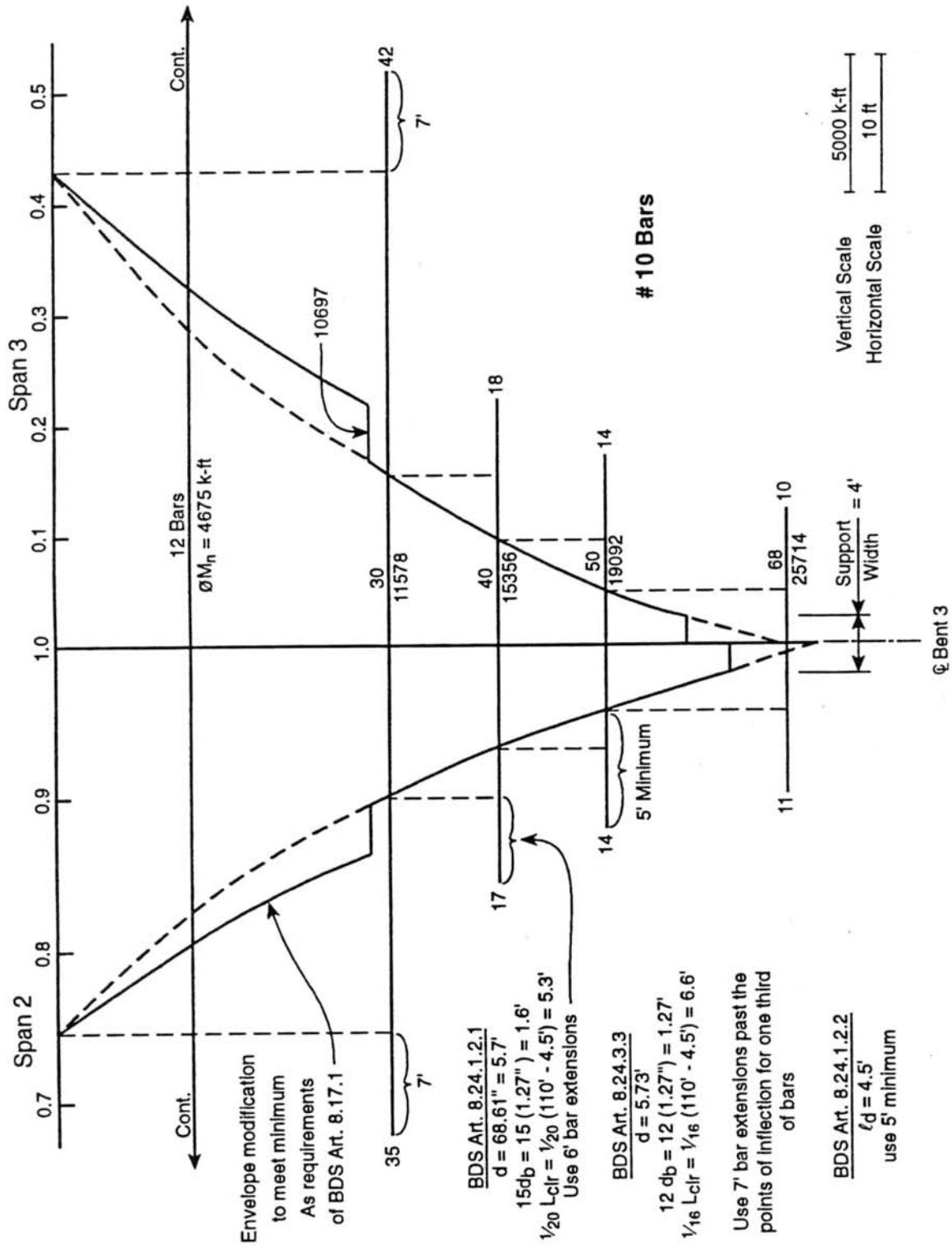

Negative Moment Envelope - Bent 3

2.19.0 Fatigue Check (BDS Art. 8.16.8.3)

Requirement: equivalent expressions

$$\begin{cases} 23.4 - 0.33f_{min} \geq f_{max} - f_{min} \\ f_{max} - 0.67f_{min} \leq 23.4 \text{ ksi} \end{cases}$$

f_{max} = maximum stress in reinforcement from (D + L + I) HS service loads in ksi (calculate using working stress analysis)

f_{min} = minimum stress in reinforcement from (D + L + I) HS service loads in ksi (calculate using working stress analysis)

Sign convention: tensile stresses are positive;

compressive stresses are negative.

Location	M_{pos}	M_{neg}	N_{bot}	N_{top}	$(M_{max} - 0.67\ M_{min}) / N$	
Span 2						
0.5	10669 k-ft	6323 k-ft	54	12	119	
0.6	9656	5454	50	12	120	
0.7	6690	2953	34	12	139	
0.8	1848	– 1017	18	30	–	← check
0.9	– 4605	– 7069	18	40	100	
col. face	– 10190	– 14005	18	68	106	
Span 3						
col. face	– 9697	– 13198	12	68	99	
0.1	– 6120	– 8782	12	50	94	
0.2	– 1401	– 4333	12	30	113	← check
0.3	2620	– 1075	20	30	–	← check
0.4	5626	1407	36	30	130	
0.5	7527	3113	36	12	151	← check
0.6	8359	4043	40	12	141	
0.7	8080	4196	36	12	146	
0.8	6672	3574	36	12	119	
0.9	3994	2175	20	12	127	

See page 2-83

M_{pos} = Dead plus positive live load moment envelope.

M_{neg} = Dead plus negative live load moment envelope.

M_{max} = Moment which causes maximum stresses in the tension steel.

M_{min} = Moment which causes minimum stresses in the tension steel.

N_{bot} = Number of fully developed bars in the bottom slab.

N_{top} = Number of fully developed bars in the top slab.

$M_{max} - 0.67\ M_{min}$ = internal member moment which will result in a steel stress of $f_{max} - 0.67\ f_{min}$ This is only true when M_{max} and M_{min} have the same sign (i.e. no moment reversal).

Do a fatigue check at the member location yielding the largest value of $(M_{max} - 0.67\ M_{min})/N$. Do this check separately for positive moment locations and negative moment locations. Also do a fatigue check at locations where moment reversal takes place.

Working Stress Analysis						
	Span 2 0.8		Span 3 0.2	Span 3 0.3		Span 3 0.5
N_{bot}	18	18	12	20	20	36
N_{top}	30	30	30	30	30	12
n	9	9	9	9	9	9
b	522"	384	384	522	384	522
b_w	44"	44	44	44	44	44
h_f	8.125"	6.375	6.375	8.125	6.375	8.125
d	69.36"	68.61	68.61	69.36	68.61	69.36
d'	3.39"	2.64	2.64	3.39	2.64	3.39
A_s	22.86 in²	38.10	38.10	25.40	38.10	45.72
A'_s	38.10 in²	22.86	15.24	38.10	25.40	15.24
M*	1848 k-ft	–1017	– 3395	2620	–1075	5441
f_s top bars	–1.42 ksi	4.86	16.25	– 2.02	5.14	– 4.39
f_s bot bars	14.47 ksi	–1.24	– 4.32	18.50	– 1.29	21.55

*M = applied moment at locations where moment reversal occurs.

*M = $M_{max} - 0.67\ M_{min}$ at locations where moment reversal does not occur.

Span 2:	0.8 pt bottom steel	14.47 – 0.67 (– 1.24) = 15.3 < 23.4 ksi	okay
	0.8 pt top steel	4.86 – 0.67 (– 1.42) = 5.8 < 23.4	okay
Span 3:	0.2 pt top steel	16.25 < 23.4	okay
	0.3 pt bottom steel	18.50 – 0.67(– 1.29) = 19.4 < 23.4	okay
	0.3 pt top steel	5.14 – 0.67 (– 2.02) = 6.5 < 23.4	okay
	0.5 pt bottom steel	21.55 < 23.4	okay

Fatigue requirements have been satisfied.

2.20.0 Final Bar Layouts

2.20.1 Span 2 – Bottom Slab Reinforcement

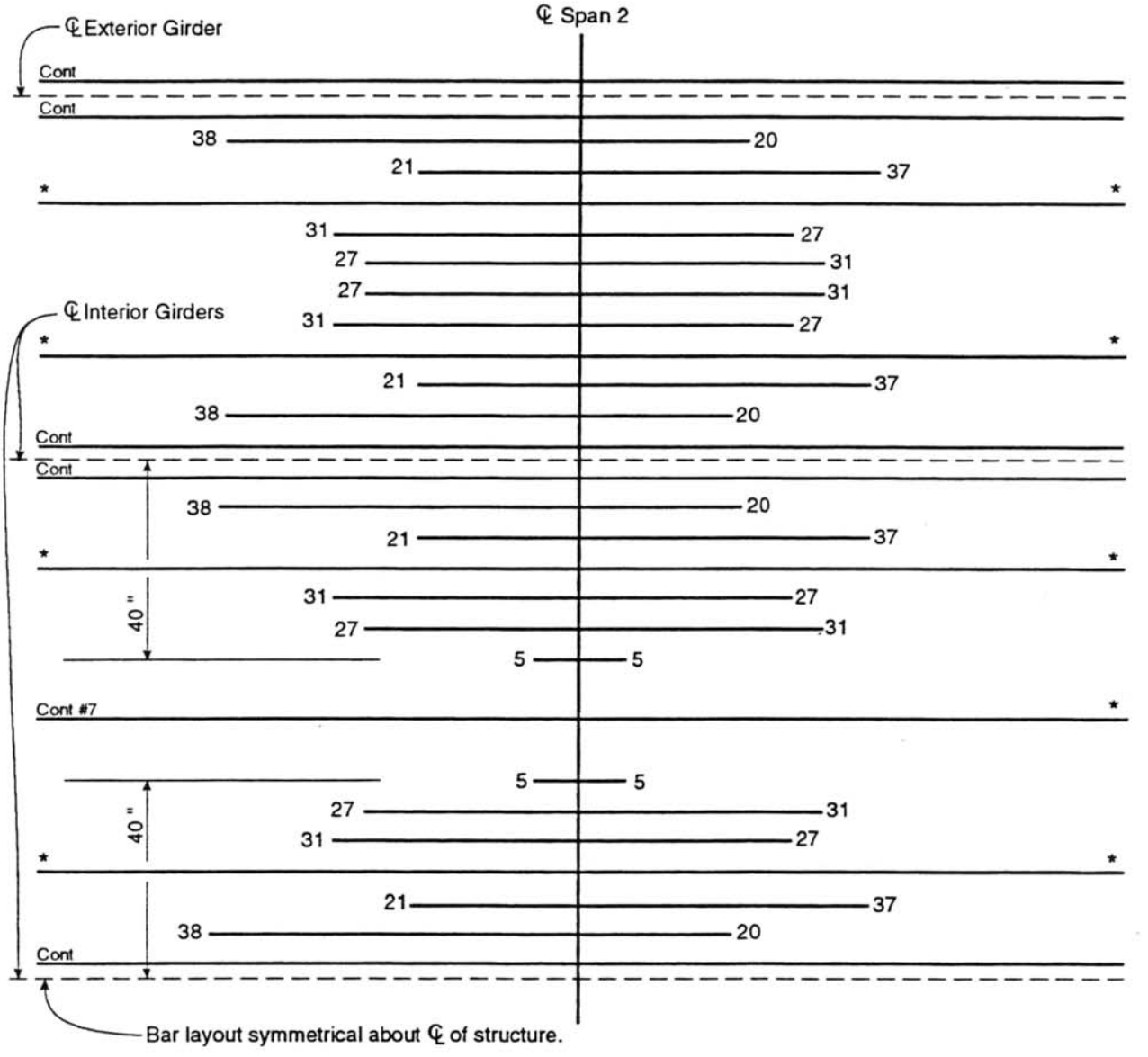

All bars are #10 except where noted.
All bars shall be evenly spaced within limits shown.
Numbers at ends of bars represent distances from span center line.

* Extend at least 6" into bent caps.

2.20.2 Span 3 – Bottom Slab Reinforcement

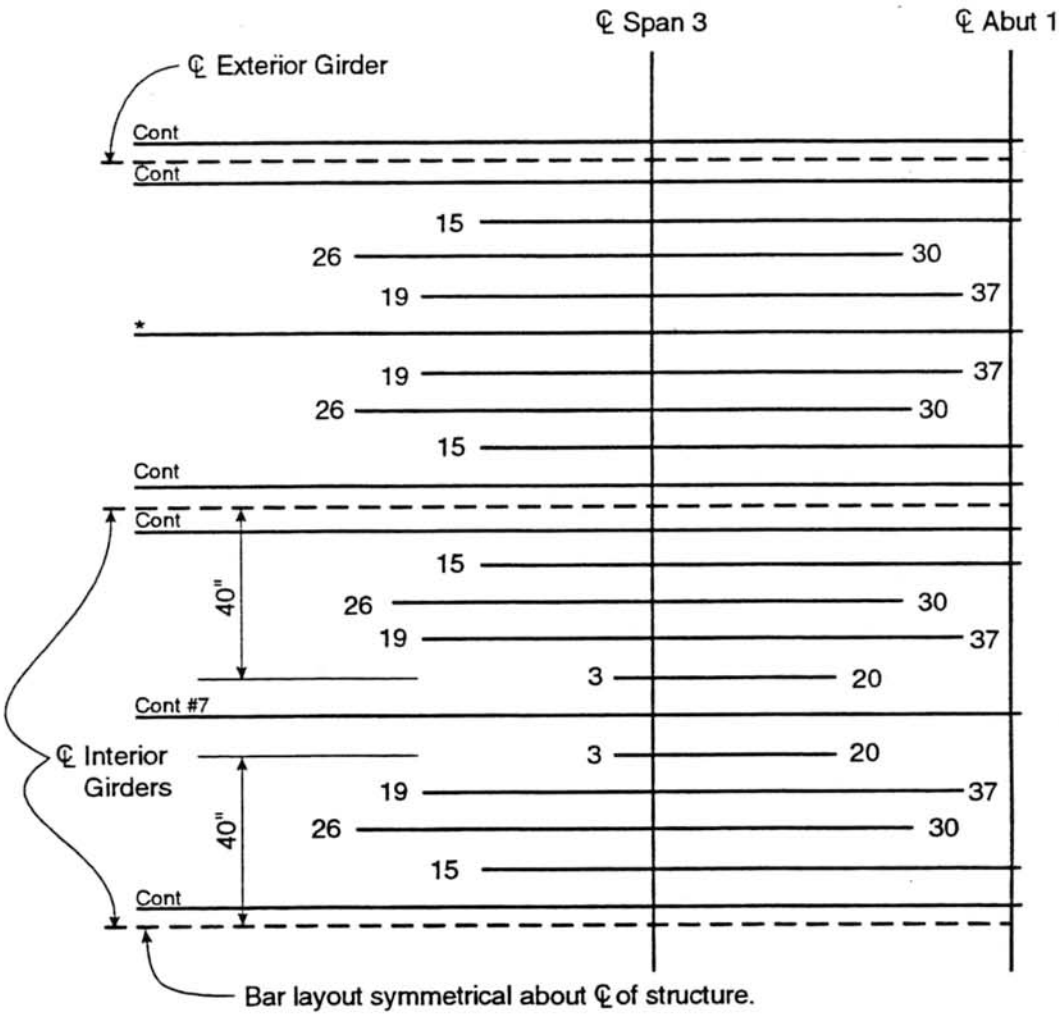

All bars are #10 except where noted.
All bars shall be evenly spaced within limits shown.
Numbers at ends of bars represent distances from span center line.

* Extend at least 6" into bent cap.

2.20.3 Bent 3 – Top Slab Reinforcement

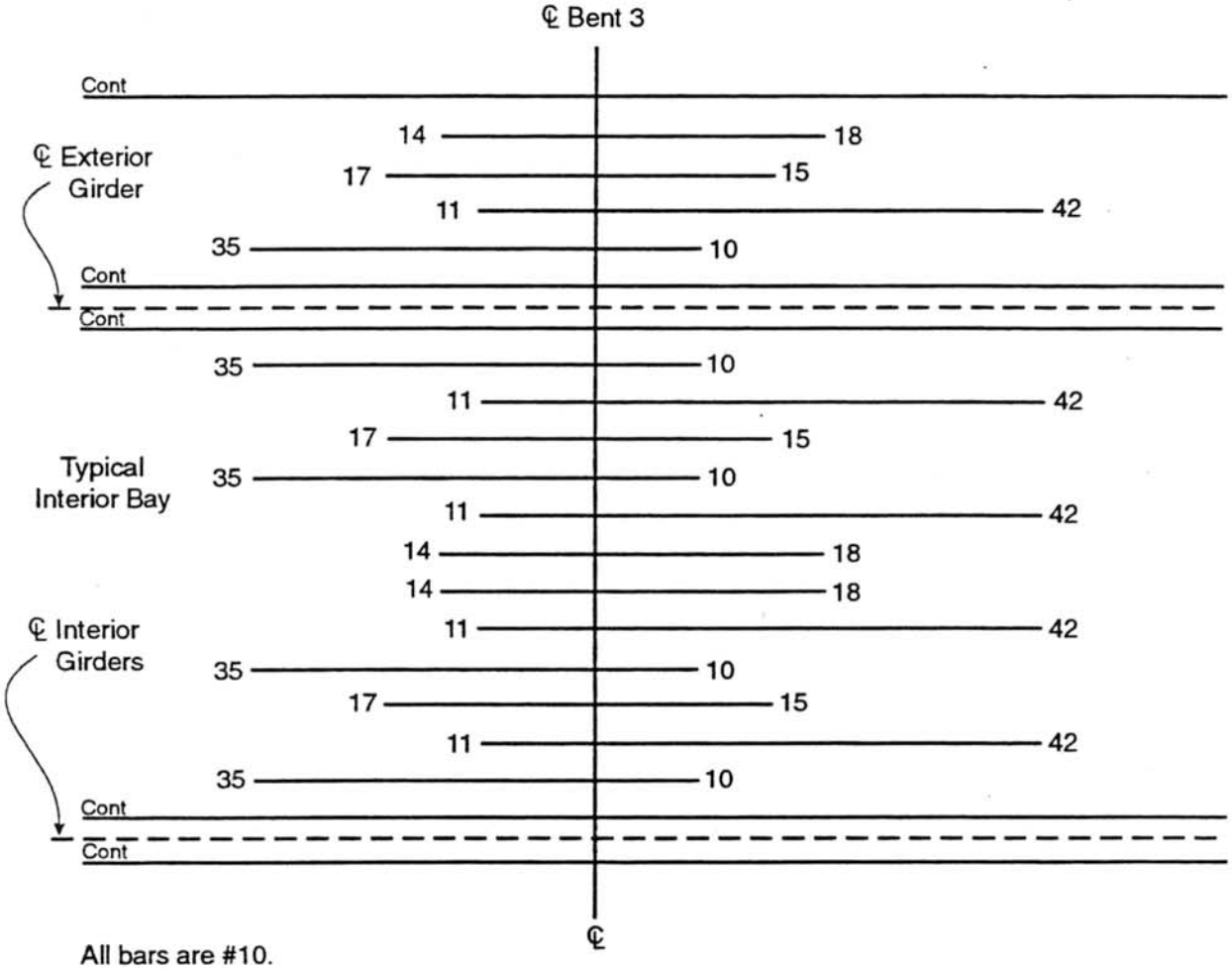

All bars are #10.
All bars shall be evenly spaced.
Numbers at ends of bars represent distances from the bent center line.

2.21.0 Longitudinal Web Reinforcement (BDS Art. 8.17.2.1.4) (BDS Art. 8.17.2.1.5)

The maximum amount of flexural reinforcement occurs at Bent 3, $A_s = 86.36\ in^2$

$$10\%\ of\ A_s = 8.64 in^2 \rightarrow \frac{8.64 in^2}{5\ girders} = 1.73\ in^2/girder\ web.$$

Minimum bar size to be used is a No. 4 bar ($A_s = 0.20\ in^2$).

$$\text{Number of No. 4 bars required} = \frac{1.73 in^2}{0.20 in^2} = 9\ bars = 5\ bars/web\ face.$$

Check maximum spacing requirement:

$$\text{Maximum bar spacing} = \text{lesser of} \begin{cases} \text{web width} = 8" & \leftarrow \\ 12" \end{cases}$$

Based on maximum spacing requirements, the number of 8 " spaces between bars is:

$$\frac{d - h_f - fillets - 2"}{8"} = \frac{69.3 - 8.125 - 4 - 2}{8} = 6.9\ spaces$$

and therefore the minimum number of bars required = 8 bars along each girder web face.

Maximum spacing requirement controls the design.

The top side face bar on each face of the girder web shall be a No. 8 bar.

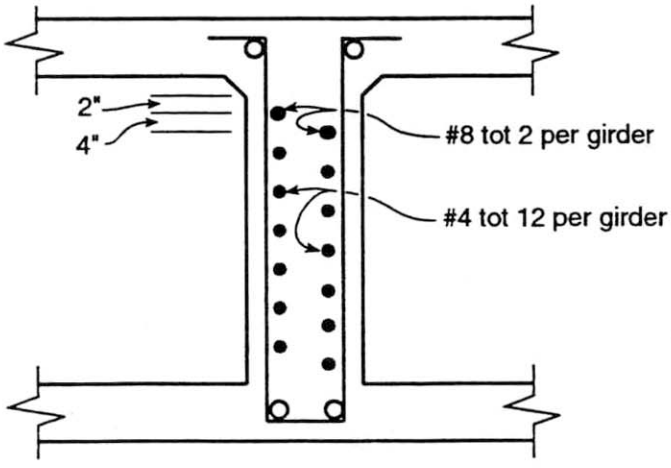

2.22.0 Shear Reinforcement

Location		Shear
Span 2	0.0	1701 k
	0.1	1382
	0.2	1067
	0.3	749
	0.4	470
	0.5	– 243
	0.6	– 488
	0.7	– 765
	0.8	– 1082
	0.9	– 1398
	1.0	– 1717

See page 2-10

Sections located less than d from the face of the bent caps may be designed (BDS Art. 8.16.6.1.2) for the factored shear, V_u, which occurs at d from the face of the caps.

d = 68.61" = 5.71'

d from cap face = 2.25' + 5.71' = 7.96' from support

The three interior girder webs are flared from 8 inches to 10 inches over a 7 foot flare length.

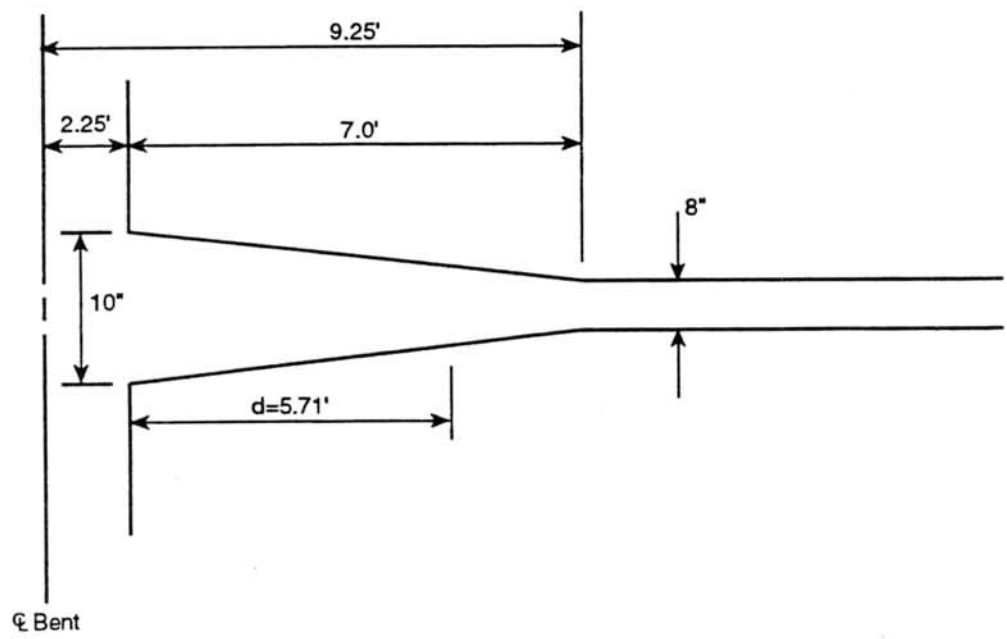

At the end of the 7 foot flare

$b_w = 10" + 8 + 8 + 8 + 10 = 44"$

At the cap face

$b_w = 5(10") = 50"$

At d = 5.71 ' from the cap face

$$b_w = 50 - \frac{5.71}{7}(50 - 44) = 45.1"$$

2.22.1 Stirrup Design Within the Flares

It was assumed when calculating the flare geometry that the stirrup steel would be utilized to the full extent allowed by BDS Art. 8.16.6.3.9

$$\text{maximum } V_s = 8\sqrt{f_c'}\,b_w d = 8\sqrt{3250}(45.1)(68.61)\left(\frac{1}{1000}\right) = 1411 \text{ k}$$

Assuming #5 stirrups are used, A_v = (5 girders)(2 legs/girder)(0.31 in^2/leg) = 3.1 in^2

$$S = \frac{A_v f_y d}{V_s} = \frac{(3.1)(60)(68.61)}{1411} = 9.04" \text{ maximum}$$

when $V_s > 4\sqrt{f_c'}\,b_w d$, S shall not exceed $\frac{d}{4}$ or 12". (BDS Art. 8.16.6.3.8)

$$\frac{d}{4} = \frac{68.61}{4} = 17.1"$$

Use S = 9" within the flared sections.

2.22.2 Stirrup Spacing Limits (BDS Art. 8.16.6.3.8 and 8.19.3)

$$\text{maximum allowed } S = \begin{cases} \frac{d}{2} \text{ or } 24'' \text{ when } V_s \le 4\sqrt{f'_c}b_w d \\ \frac{d}{4} \text{ or } 12'' \text{ when } 4\sqrt{f'_c}b_w d < V_s \le 8\sqrt{f'_c}b_w d \end{cases}$$

$$\frac{d}{2} = \frac{68.61}{2} = 34.3''$$

$$\frac{d}{4} = \frac{68.61}{4} = 17.1''$$

Assume $V_c = 2\sqrt{f'_c}\,b_w d$ (BDS Art. 8.16.6.2.1)

$$\phi V_n = \phi(V_c + V_s) = \begin{cases} 6\phi\sqrt{f'_c}b_w d & \text{when } V_s = 4\sqrt{f'_c}b_w d \\ 10\phi\sqrt{f'_c}b_w d & \text{when } V_s = 8\sqrt{f'_c}b_w d \end{cases}$$

$b_w = 44''$ at web sections where no flare is present.

$\phi = 0.85$ for shear (BDS Art. 8.16.1.2.2)

$6\phi\sqrt{f'_c}\,b_w d = 878$ k

$10\phi\sqrt{f'_c}\,b_w d = 1463$ k

$$\text{maximum allowed } S = \begin{cases} 24'' & \text{when } \phi V_n \le 878\text{k} \\ 12'' & \text{when } 878\text{k} < \phi V_n \le 1463\text{k} \end{cases}$$

2.22.3 Shear Capacity for Different Stirrup Spacings

$A_v = 3.1 \text{ in}^2$

$b_w = 44''$

$d = 68.61''$

$V_c = 2\sqrt{f'_c}\,b_w d \qquad V_s = \frac{A_v f_y d}{s} \qquad \phi V_n = \phi(V_c + V_s)$

S	ϕV_n
9 "	*1463 k
12	1196
15	1015
18	894
24	744

*1463 k is from the limit, maximum $\phi V_n = 10\phi\sqrt{f'_c}\,b_w d$

2.22.4 Graphical Procedure (Steps are shown circled on the following graph)

Step 1: Plot the V_u design envelope to scale. Note that the maximum value of V_u occurs at d from the bent cap faces.

Step 2: For different S values plot ϕV_n as a horizontal line. Only do this in the nonflaring web lengths.

Step 3: Plot ϕV_n values which correspond to maximum S values.

Step 4: Choose reasonable stirrup spacings. Graphically measure distances along the span for each value of S chosen.

Step 5: Stipulate final design stirrup spacing.

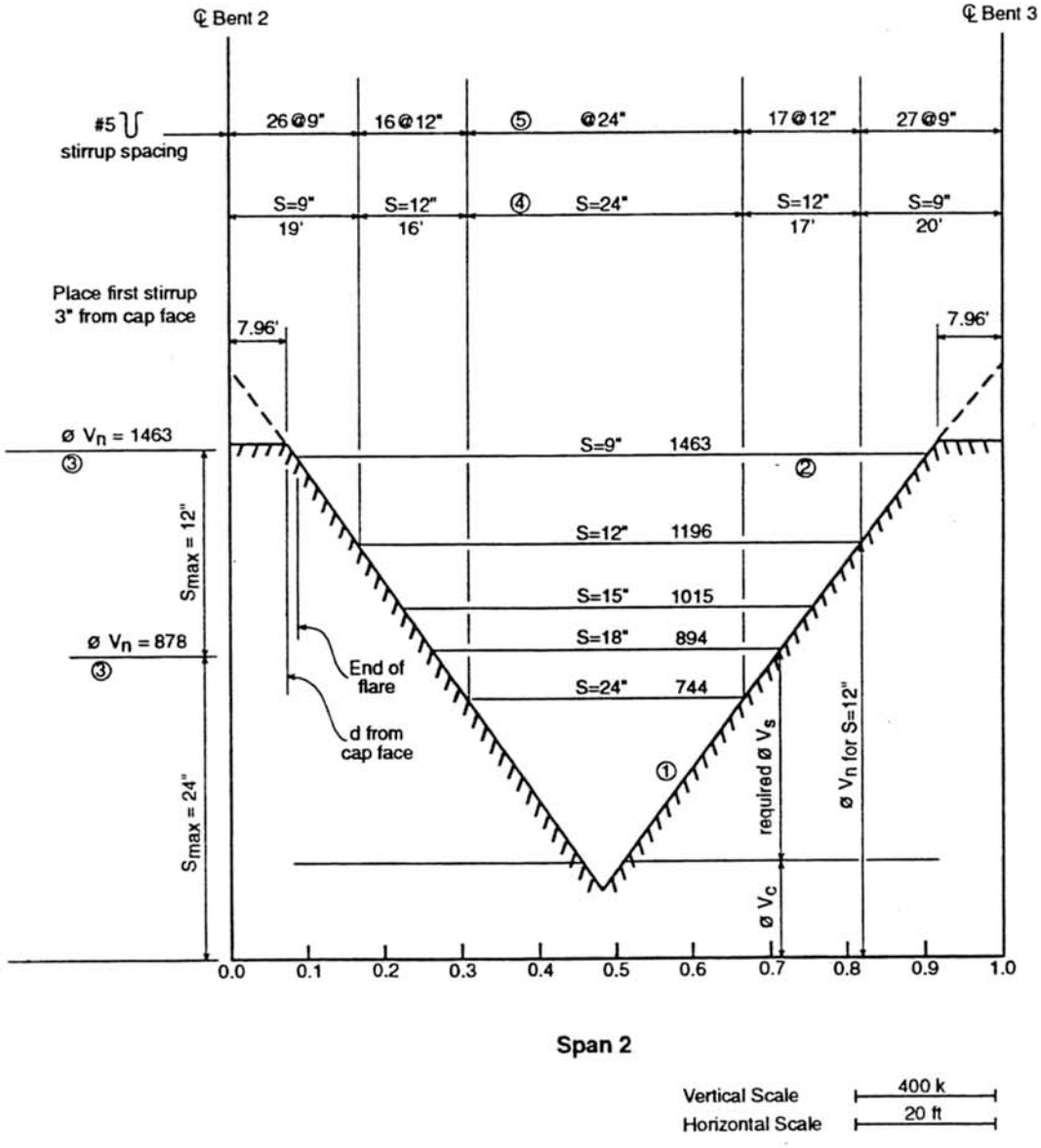

2.23.0 Bent 3 Model

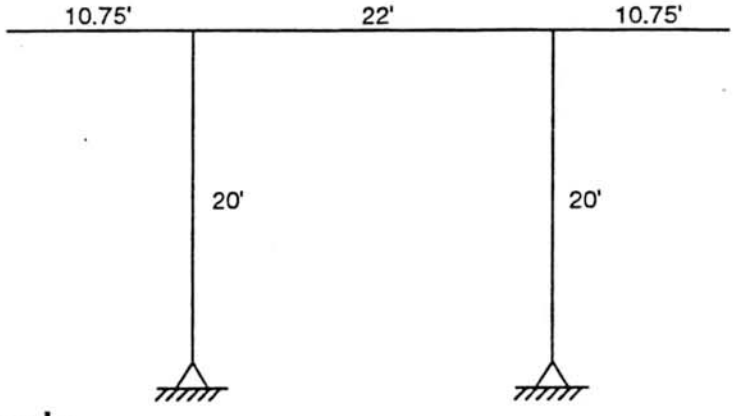

2.24.0 Bent Loads

2.24.1 Dead Loads

From the analysis of the longitudinal model:

Dead load on bent = 1300.6 k (see page 2-80)

Assume this dead load is applied to the cap equally through each of the five girder webs.

$$\frac{\text{dead load}}{\text{girder}} = \frac{1300.6\text{ k}}{5} = 260.1\text{ k}$$

The 1300.6 k dead load did not take into account the existence of a solid cap section.

Extra cap dead load = $(57.5")(54")\left(\frac{1}{144}\right)(0.15\text{ kcf}) = 3.24\text{ klf}$ (see page 2-52)

Apply this extra dead load uniformly along the cap. Do not apply it on the deck overhangs however.

2.24.2 Live Loads

The following data is from the longitudinal model analysis. All loads represent one unfactored truck/lane.

Bent 3	Maximum Axial Load Case			Maximum Moment Case		
(member #5)	P	M_{top}	M_{bot}	P	M_{top}	M_{bot}
HS20 truck	119 k	57 k-ft	0	64	294	0
P-truck	310	142	0	200	761	0

See pages 2-72 and 2-77

Caltrans currently utilizes a program named"BENT" to analyze bents. The program will apply the above truck loads directly to the bent in the form of wheel lines. It moves the truck across the cap to obtain maximum design forces for the cap and supporting columns. It will also put trucks in more than one lane if necessary. It should be noted that the program considers the bent to be fully supported against sidesway when computing forces due to live loads.

The bent loading shown below will result in a maximum negative moment in the left cantilever member. It consists of a single P-truck, dead load due to the solid cap section, and dead load transferred to the cap through the girder stems.

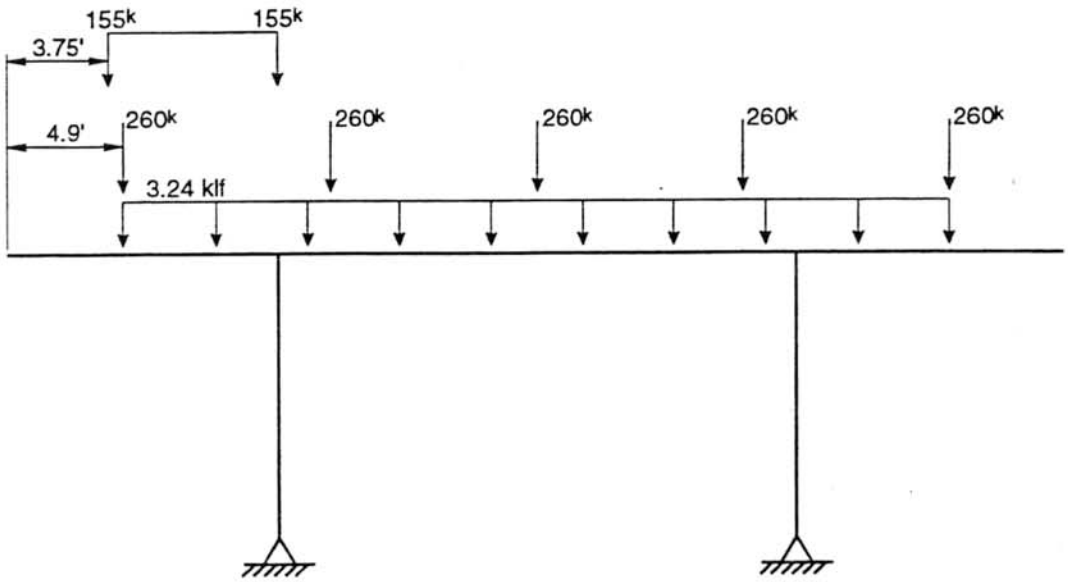

The 4.9 foot distance shown above is from the edge of deck to the approximate center of gravity of the exterior girder web.

The 3.75 foot distance = 1.75 feet barrier rail plus 2 feet from lane line to wheel line.

2.25.0 Bent Cap Geometry

The bent columns have a very definite geometry and stiffness. The cap consists of a rectangular section with overhanging deck and soffit slabs. A reasonable assumption must be made to determine how much of the deck and soffit slabs can be included as part of the cap.

Use of BDS Art. 8.10.1.4 seems reasonable:

$6t = 6(6.375") = 38.25"$

$\frac{1}{10} L = \frac{1}{10}(22') = 26.4"$

$\frac{1}{10} L = \frac{1}{10}(2 \times 10.75') = 25.8"$ for cantilevers

Assume cap web width = column diameter + 6" = 4.5' = 54"

Total cap width = 25.8 + 54 + 25.8 = 105.6" = 8.8'

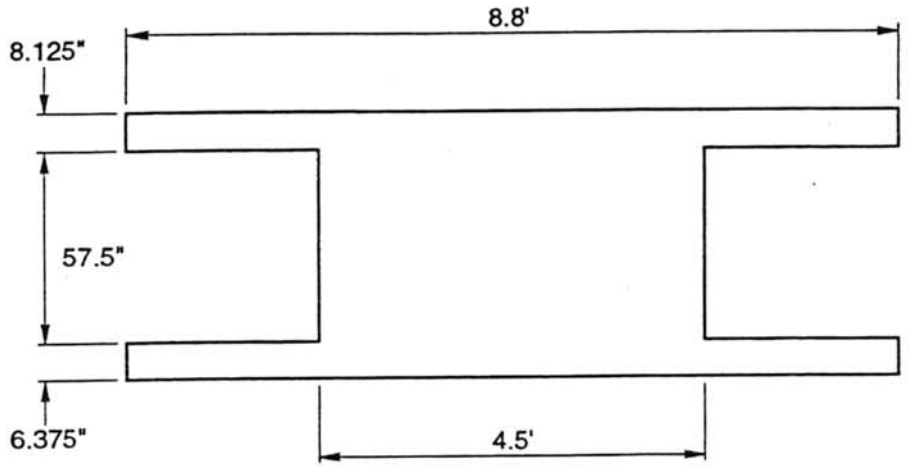

2.26.0 Face of Bent Support (BDS Art. 8.8.2)

The face of the column support shall be considered to be at a section on the column face which is 1.5 times the structure depth below the deck surface.

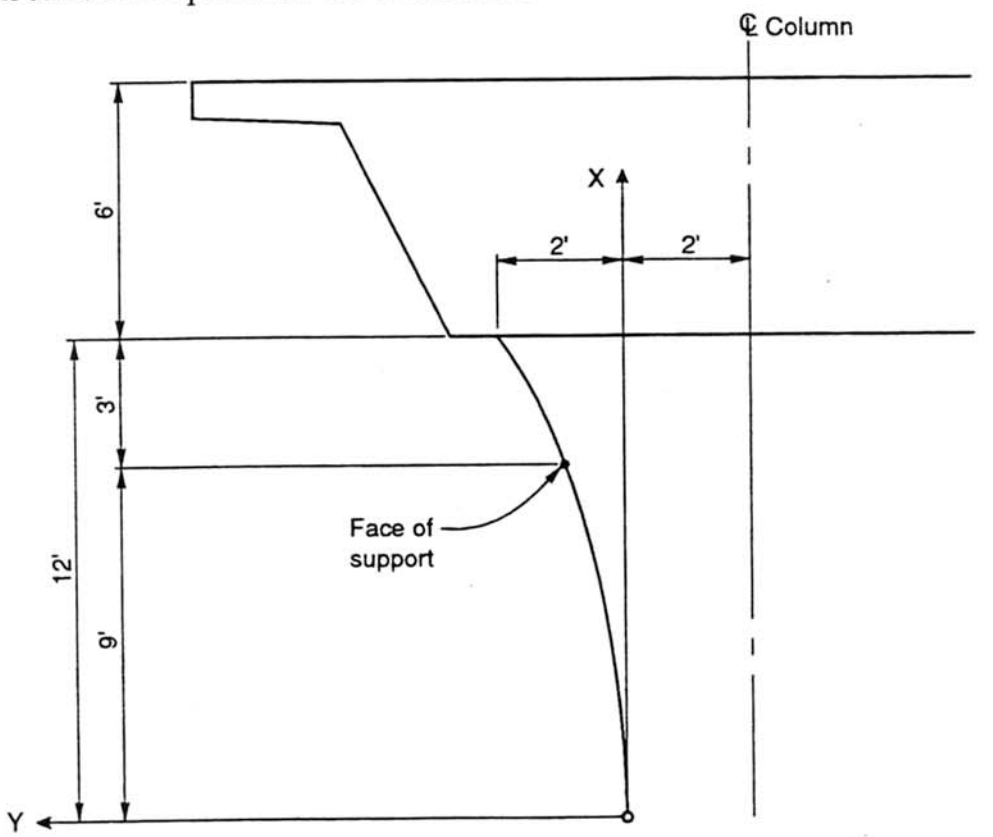

Equation of parabolic flare of column face: $y = ax^2$

for $x = 12'$, $y = 2'$

$a = y/x^2 = 2/12^2$

$y = (2/144)x^2$

for $x = 9'$, $y = 2/144\,(9)^2 = 1.125'$

Face of support = 1.125 + 2 = 3.125' from the column centerline

2.27.0 Factored Cap Design Moments (D + L + I) in k-ft

Location		Positive	Negative
Left	0.3		0
Cantilever	0.4		– 132
Span 1	0.5		– 552
	0.6		– 1172
	0.7		– 1797
	0.8		– 2427
	0.9		– 3062
	1.0		– 3945
Middle	0.0		– 3528
Span 2	0.1	– 360	– 2082
	0.2	676	– 1307
	0.3	1392	– 552
	0.4	2014	117
	0.5	2480	
	0.6	2107	
	0.7	1404	
	0.8	724	
	0.9	– 285	
	1.0	0	

See page 2-91

All of the above moments are factored group I_H or group I_{pw} loads.

2.28.0 Maximum Design Moments

Moments at face of column supports may be used for negative moment design. (BDS Art. 8.8.2)

Span 1: support face is $\frac{3.125}{10.75} = 0.2907$ of span from column centerline

$$M_u = -2427 + 0.907(2427 - 1797) = -1857 \text{ k-ft}$$

Span 2: support face is $\frac{3.125}{22} = 0.142$ of span from column centerline

$M_u = -2082 + 0.42(2082-1307) = -1757$ k-ft

Location	Design Moment
Span 1 col. face	–1857 k-ft
Span 2 0.5	2480 k-ft

2.29.0 Bent Cap Minimum Reinforcement Requirements (BDS Art. 8.17.1)

From the Bent analysis output (see page 2-87):

$I_g = 119.3$ ft^4

$y_t = 3.05'$ for positive moments

2.29.1 For: Positive Moments

$$\text{minimum } M_u = 9\sqrt{3250}\left(\frac{119.3}{3.05}\right)\left(\frac{144}{1000}\right) = 2890 \text{ k-ft}$$

2.29.2 For: Negative Moments

$$\text{minimum } M_u = 9\sqrt{3250}\left(\frac{119.3}{6 - 3.05}\right)\left(\frac{144}{1000}\right) = 2988 \text{ k-ft}$$

Note that the minimum design moments are larger than the factored moments produced by the truck loadings. Obviously, the columns are overdesigned such that the cap has a relatively low load applied to it. A more practical design would either downsize the columns or change to a single column design.

2.30.0 Cap Effective Depth

structure depth	72	72
– clearance	1.5	2
– transverse bars	0.5	0.75
– longitudinal bars	1.27	1.27
– #11 cap bars	1.41/2	1.41/2
	$d_{pos} = 68.02"$	$d_{neg} = 67.27"$

Span 2: support face is $\frac{3.125}{22} = 0.142$ of span from column centerline

$M_u = -2082 + 0.42(2082-1307) = -1757$ k-ft

Location	Design Moment
Span 1 col. face	–1857 k-ft
Span 2 0.5	2480 k-ft

2.29.0 Bent Cap Minimum Reinforcement Requirements (BDS Art. 8.17.1)

From the Bent analysis output (see page 2-87):

$I_g = 119.3$ ft^4

$y_t = 3.05'$ for positive moments

2.29.1 For: Positive Moments

$$\text{minimum } M_u = 9\sqrt{3250}\left(\frac{119.3}{3.05}\right)\left(\frac{144}{1000}\right) = 2890 \text{ k-ft}$$

2.29.2 For: Negative Moments

$$\text{minimum } M_u = 9\sqrt{3250}\left(\frac{119.3}{6 - 3.05}\right)\left(\frac{144}{1000}\right) = 2988 \text{ k-ft}$$

Note that the minimum design moments are larger than the factored moments produced by the truck loadings. Obviously, the columns are overdesigned such that the cap has a relatively low load applied to it. A more practical design would either downsize the columns or change to a single column design.

2.30.0 Cap Effective Depth

structure depth	72	72
– clearance	1.5	2
– transverse bars	0.5	0.75
– longitudinal bars	1.27	1.27
– #11 cap bars	1.41/2	1.41/2
	$d_{pos} = 68.02"$	$d_{neg} = 67.27"$

2.31.0 Cap Steel Requirements

For rectangular sections ($a \le h_f$):

$$A_s = \frac{z}{2}\left[1-\sqrt{1-\frac{4\,M_u}{\phi\, f_y dz}}\right] \text{ where } z = \frac{1.7\, f'_c bd}{f_y}$$

$$a = \frac{A_s f_y}{.85 f'_c b}$$

2.31.1 Positive Moment Sections

M_u = 2890 k-ft
b = 106"
b_w = 54"
h_f = 8.125"
d = 68.02"

z = 663.9 in^2
A_s = 9.58 in^2
a = 1.96"
maximum allowed A_s = 78.40 in^2

2.31.2 Negative Moment Sections

M_u = –2988 k-ft
b = 106"
b_w = 54"
h_f = 6.375"
d = 67.27"

z = 656.6
A_s = 10.02 in^2
a = 2.05"
maximum allowed A_s = 74.55 in^2

Number of #11 bars required = $\frac{10.02}{1.56}$ = 6.4

Try using 7 #11 bars for both top and bottom steel in the bent cap.

A_s = (7)(1.56) = 10.92 in^2

2.32.0 Crack Control (BDS Art. 8.16.8.4)

Service Load Moments (D + L + I)H (see page 2-90)

Span 2 0.5pt M = 1204 k-ft

Span 1 col. face M = – 976 k-ft

It should be sufficient to check only at the 1204 k-ft section.

Assume the use of 7 #11 bars.

Calculate the working stress in the steel:

$b = 106"$

$b_w = 54"$

$h_f = 8.125"$

$n = 9$

$A_s = 10.92 \text{ in}^2$

$d = 68.02"$ (for positive moment)

$M = 1204$ k-ft

$f_s = 20.46$ ksi

Since $f_s = 20.46 < 24$ ksi, serviceability is satisfied for both crack control and fatigue. (BDS Art. 8.14.1.6)

Therefore, use 7 #11 bars for both top and bottom steel.

2.33.0 Construction Reinforcement (BDS Art. 8.17.2.1.6)

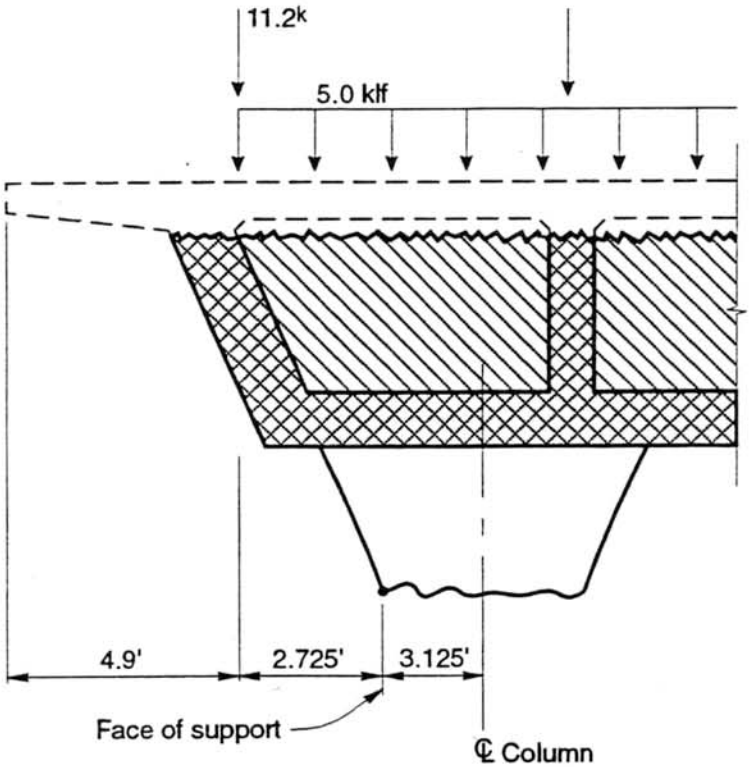

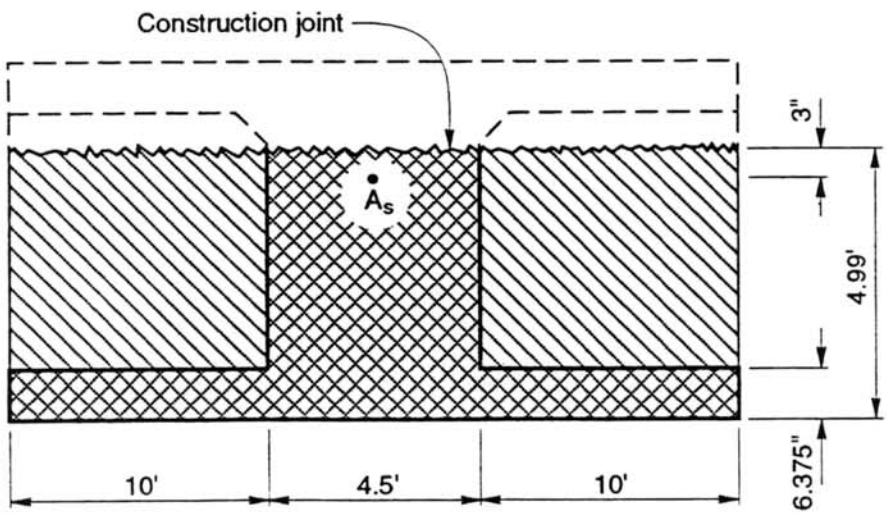

Reinforcement shall be placed approximately 3 inches below the construction joint.

Design for $M_u = 1.3 \begin{bmatrix} \text{dead load negative moment of shaded portion of cap} \\ \text{and superstructure as shown in the above figures} \end{bmatrix}$

Dead load of cap and soffit slab:

DL = (0.15 kcf)[(4.99)(4.5)+(20)(6.375/12)] = 5.0 klf

Dead load of exterior girder web:

DL = (0.15 kcf) [(10/12)(4.99 – 6.375/12)(20)] = 11.2 k

Dead load moment at the cantilevered face of support:

$$M = (2.725')(11.2k) + \frac{(5klf)(2.725ft)^2}{2} = 49.1 \text{ k-ft}$$

$M_u = 1.3(49.1) = 63.8$ k-ft

Assume $f'_c = 2500$ psi at the time when the cap is required to resist construction loads.

b = 106" = effective compression flange width (BDS Art. 8.10.1.4)
b_w = 54"
h_f = 6.375"
d = 72 – 8.125 – 4 – 3 = 56.87"
M_u = 63.8 k-ft
required $A_s = 0.25$ in^2

The dimensions of the bent model are such that a very small moment was calculated for use in the design of the construction reinforcement. This has resulted in a very small steel requirement. It seems reasonable that some other method should be considered for design of the construction steel. One possibility would be to use minimum reinforcement criteria of BDS Art. 8.17.1.

Design for minimum $M_u = 1.2\ M_{cr}$

For simplicity of the example calculations, the overhangs will be neglected.

$$I_{gross} = \frac{1}{12}(4.5')(4.99')^3 = 46.6 \text{ ft}^4$$

$$M_u = 9\sqrt{f'_c}\ I_g / y_t = 9\sqrt{3250}\left(\frac{46.6ft^4}{2.5\ ft}\right)\left(\frac{144}{1000}\right) = 1377 \text{ k-ft}$$

Now find required $A_s = 5.45$ in^2

Use 4 #11 bars ($A_s = 6.24$ in^2)

Some designers will initially assume the use of 4 #11 bars. They use #11 bars because the main cap bars are #11. They will then check their steel requirements by the procedure shown above. If 4 #11 bars are insufficient, they will add steel. If 4 #11 bars are too much, they will still use the 4 #11 bars.

2.34.0 Cap Side Face Reinforcement (BDS Art. 8.17.2.1.4)

Flexural $A_s = 7(1.56) = 10.92\ in^2$

10% of $A_s = 1.1\ in^2$

Place this steel within a distance of approximately 53 inches along the side faces of the cap.

Maximum bar spacing = 12"

Minimum bar size = #4

$$\text{Number of \#4 bars required} = \frac{1.1}{0.2} = 5.5 \text{ or } 6 \text{ bars}$$

$$\text{Number of 12" spaces between bars} = \frac{53\ in}{12\ in} = 4.5 \text{ spaces}$$

Therefore, 6 bars are required along each face of the cap. There is already a #11 bar at the bottom of the cap and just below the construction joint. Therefore, place 4 #4 bars along each face of the cap.

2.35.0 Cap Shear Reinforcement

Location		Shear
Span 1	0.3	0 k
	0.4	– 232
	0.5	– 572
	0.6	– 577
	0.7	– 581
	0.8	– 586
	0.9	– 590
	1.0	– 826
Span 2	0.0	1026
	0.1	617
	0.2	545
	0.3	473
	0.4	400
	0.5	– 71

See page 2-91

Usually, the maximum design shear, V_u, can be taken as the shear that occurs at a distance d from the face of the support. However, major concentrated loads may occur on the cap between the face of the support and a distance d from the support face. Therefore, it is reasonable to design for V_u which occurs at the face of the support column.

2.35.1 Span 1 Shear Design at Support Face

Face of support = $\frac{3.125}{10.75}$ = 0.29 of span from the column centerline

V_u = 586k approximately

d = 67.27"

$\phi V_c = 2\phi\sqrt{f'_c}b_w d = 2(0.85)\sqrt{3250}(54)(67.27)/1000 = 352$ k

required $\phi V_s = V_u - \phi V_c = 586 - 352 = 234$ k

try using #6 stirrups [ ]

A_v = (2 legs)(0.44 in^2/leg) = 0.88 in^2

$$\text{maximum } S = \frac{A_v f_y d}{V_s} = \frac{\phi A_v f_y d}{\phi V_s} = \frac{(0.85)(0.88)(60)(67.27)}{234} = 12.9 \text{ inches}$$

By inspection $\phi V_s < 4\phi\sqrt{f'_c}\, b_w d_A$

$$\text{Therefore, maximum } S = \text{ lesser of } \left\{\begin{array}{l} 24 \text{ inches} \\ \frac{d}{2} = 33 \text{ inches} \end{array}\right\} = 24"$$

Use #6 [ ] @ 12" at column face

2.35.2 Span 1 Shear Design at Cap End

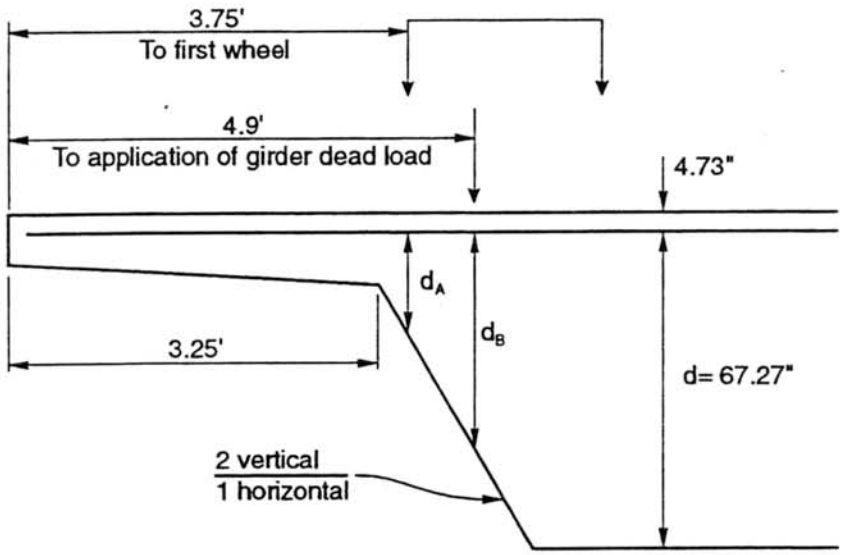

$d_A = (3.75 - 3.25)(2/1)(12) + 12 - 4.73 = 19.27"$

$d_B = (4.9 - 3.25)(2/1)(12) + 12 - 4.73 = 46.87"$

3.75 feet from Edge of Deck

$V_u = 232$ k

$\phi V_c = 2\phi\sqrt{f'_c}\, b_w d_A = 2(0.85)\sqrt{3250}(54)(19.27)/1000 = 101$ k

required $\phi V_s = 232 - 101 = 131$k

$$\text{maximum } S = \frac{\phi A_v f_y d}{\phi V_s} = \frac{(0.85)(0.88)(60)(19.27)}{131} = 6.6"$$

By inspection $\phi V_s < 4\phi\sqrt{f'_c}\, b_w d_A$

$$\text{maximum } S = \text{lesser of} \left\{ \begin{array}{l} 24 \text{ inches} \\ \dfrac{d_A}{2} \end{array} \right\} = 9.6"$$

#6 [ ] @ 6" will be acceptable.

4.9 feet From Edge of Deck

$V_u = 572$ k approximately

$\phi V_c = 2\phi\sqrt{f'_c}\, b_w d_B = 245$ k

required $\phi V_s = 572 - 245 = 327$ k

$$\text{maximum } S = \frac{(0.85)(0.88)(60)(46.87)}{327} = 6.4''$$

by inspection, $\phi V_s < 4\phi\sqrt{f'_c}\, b_w d_B$

$$\text{maximum } S = \text{ lesser of } \left\{ \begin{array}{l} 24 \text{ inches} \\ \dfrac{d_B}{2} \end{array} \right\} = 23.4''$$

#6 [ ] @ 6" will be acceptable

Remainder of Span 1

Use the same spacing as that calculated to be used at the face of the column support.

2.35.3 Span 2 Shear Design

$$\text{Face of support} = \frac{3.125}{22} = 0.142 \text{ of span from the column centerline.}$$

$V_u = 617 - 0.42(617 - 545) = 587$ k

$\phi V_c = 2\phi\sqrt{f'_c}\, b_w d = 352$ k (using d= 67.27")

required $\phi V_s = 587 - 352 = 235$ k

$$\text{maximum } S = \frac{\phi A_v f_y d}{\phi V_s} = 12.8''$$

By inspection $\phi V_s < 4\phi\sqrt{f'_c}\, b_w d$

$$\text{maximum } S = \text{ lesser of } \left\{ \begin{array}{l} 24 \text{ inches} \\ \dfrac{d}{2} \end{array} \right\} = 24''$$

use #6 [ ] @ 12" at column face.

When S = 24 inches

$$\phi V_s = \frac{\phi A_v f_y d}{S} = \frac{(0.85)(0.88)(60)(67.27)}{24} = 125 \text{ k}$$

$$\phi V_n = \phi V_c + \phi V_s = 352 + 125 = 477 \text{ k}$$

Use #6 [ ] @ 24" between the 0.3 and 0.7 points of Span 2.

2.36.0 Final Cap Design

Note: Bar configuration based on *Bridge Design Details* manual page 8-30, Dated June 1986.

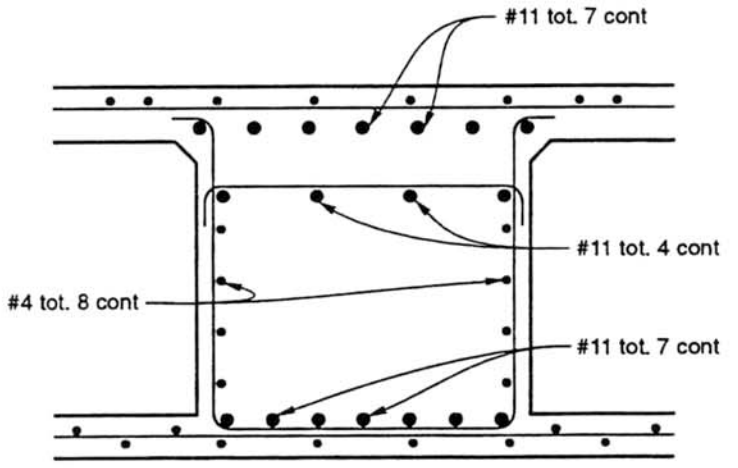

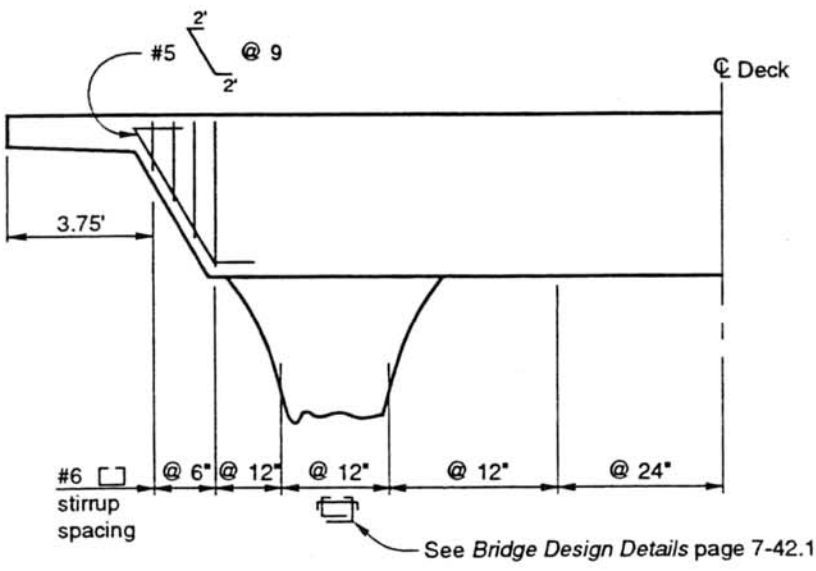

2.37.0 Computer Output

The following computer output comes from the CALTRANS computer programs:

BRIDGE DESIGN SYSTEM (BDS) version 3.00, release 09, dated 02/20/92

BENT version 1.00, release 1.3, dated 02/10/92

The data has been rearranged and edited for use with the accompanying bridge design example problem. Output from the above CALTRANS programs has a different format than the output contained on the following pages.

```
***  Trial 0   =  Dead Load analysis of structure
***  LL No. 1  =  HS20-44   analysis of structure
***  LL No. 4  =  P5 - P13  analysis of structure

***  Units of E for concrete are  ksi.
***  Units for all other quantities are  kips,  feet,  or  (kip x feet).
```

2.37.1 Factored Loads – BDS

```
*************************************************
INPUT FILE FOR BDS PROGRAM    - FACTORED RESULTS -
*************************************************
      1 1 2P H 700     0   0 3250    0195   0   0   0   0 0  01          100
      2 2 3  H1100     0   0 3250    0195   0   0   0   0 0  0           100
      3 3 4 RH 800     0   0 3250    0195   0   0   0   0 0  0           100
      4 5 2P   200     0  40 3250    0195   0   0   0   0 0  0           100
      5 6 3P   200     0  40 3250    0195   0   0   0   0 0  0           100
      1   0 0  0  0 435 600 812 638 3 811025011025 0 33 712 32 712     1  200
      2   0 1  0  0   0   0   0   0 0 00 0  00 0  0  0 0 0  0 0 0     0  200
      3   0 1  0  0   0   0   0   0 0 00 0  00 0  0  0 0 0  0 0 0     0  200
      4   0 0 26    0    0    0    0 2513    2514          1             201
      4  80 1  0    0    0    0    0    0       0          0             201
      4 140 0 26    0    0    0    0 3314    3580          2             201
      4 200 0 26    0    0    0    0 5714    6780          3             201
      5   0 1  0    0    0    0    0    0       0          0             201
      5  80 1  0    0    0    0    0    0       0          0             201
      5 140 2  0    0    0    0    0    0       0          0             201
      5 200 3  0    0    0    0    0    0       0          0             201
      0 1   2838U   0   0      0      0 0 BARRIER RAIL AND FUTURE AC     300
      0 2   2838U   0   0      0      0 0 "                              300
      0 3   2838U   0   0      0      0 0 "                              300
      1 6745    0 10  0     0    000                                     400
      1 4039    0 10  0 0                                                500
```

MEM NO	JT LT	JT RT	END COND LT	END COND RT	DIR	SPAN	SUPPORT OR HINGE	E	I	Yt	DEAD LOAD UNI	DEAD LOAD SEC	CARRY OVER FACTORS LT	CARRY OVER FACTORS RT	DISTRIBUTION FACTORS LT	DISTRIBUTION FACTORS RT
1	1	2	P		H	70.0	0.0	3250.	363.38	3.49	0.000	.195	0.500	0.000	0.000	0.445
2	2	3			H	110.0	0.0	3250.	363.38	3.49	0.000	.195	0.500	0.500	0.378	0.400
3	3	4		R	H	80.0	0.0	3250.	363.38	3.49	0.000	.195	0.000	0.500	0.412	0.000
4	5	2	P			20.0	4.0	3250.	varies	–	0.000	.195	0.685	0.000	0.000	0.178
5	6	3	P			20.0	4.0	3250.	varies	–	0.000	.195	0.685	0.000	0.000	0.188

***** IF MEMBER IS HORIZONTAL SUPPORT OR HINGE FIELD EQUALS LOCATION OF HINGE FROM LEFT END OF MEMBER *****
***** IF MEMBER IS VERTICAL SUPPORT OR HINGE FIELD EQUALS SUPPORT WIDTH USED FOR MOMENT REDUCTION *****
***** Yt = distance from bottom of superstructure soffit to the centroid of the concrete superstructure.

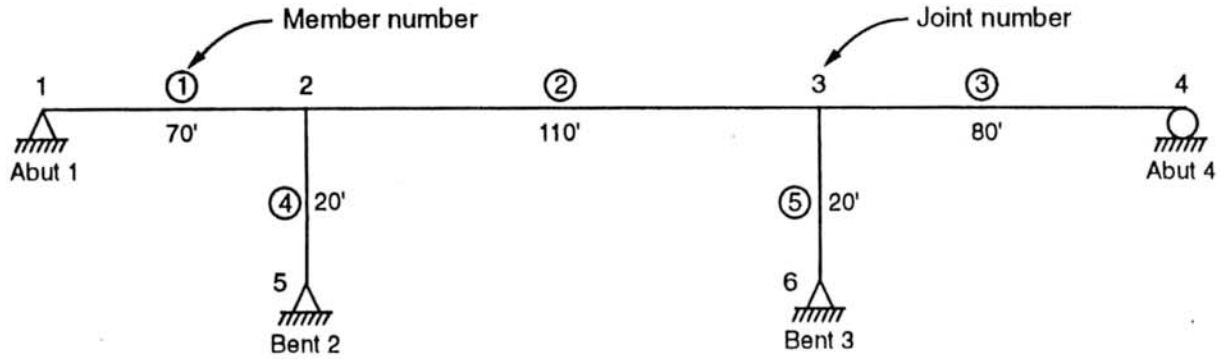

DEAD LOAD ANALYSIS *** SIDESWAY NOT CONSIDERED. FRAME CANNOT SWAY. ***

HORIZONTAL MEMBER MOMENTS TRIAL 0 (FACTORED)

MEM NO	LEFT	.1 PT	.2 PT	.3 PT	.4 PT	.5 PT	.6 PT	.7 PT	.8 PT	.9 PT	RIGHT
1	0.	2192.	3611.	4258.	4132.	3234.	1563.	-880.	-4096.	-8084.	-12845.
2	-14117.	-5661.	887.	5529.	8262.	9088.	8006.	5017.	120.	-6684.	-15395.
3	-14524.	-8531.	-3547.	428.	3393.	5350.	6298.	6237.	5167.	3088.	0.

VERTICAL MEMBER MOMENTS TRIAL 0 (FACTORED)

4	0.	-127.	-254.	-382.	-509.	-636.	-763.	-891.	-1018.	-1145.	-1272.
5	0.	87.	174.	261.	349.	436.	523.	610.	697.	784.	872.

HORIZONTAL MEMBER SHEARS TRIAL 0 (FACTORED)

1	368.3	257.9	147.6	37.2	-73.1	-183.5	-293.9	-404.2	-514.6	-624.9	-735.3
2	855.5	682.0	508.6	335.2	161.8	-11.6	-185.0	-358.5	-531.9	-705.3	-878.7
3	812.1	686.0	559.9	433.8	307.7	181.5	55.4	-70.7	-196.8	-322.9	-449.1

VERTICAL MEMBER SHEARS TRIAL 0 (FACTORED)

4	-63.6	-63.6	-63.6	-63.6	-63.6	-63.6	-63.6	-63.6	-63.6	-63.6	-63.6
5	43.6	43.6	43.6	43.6	43.6	43.6	43.6	43.6	43.6	43.6	43.6

VERTICAL MEMBER REACTIONS TRIAL 0 (FACTORED)

MEM NO	LT REACTION	RT REACTION	MEMBER WEIGHT
4	1716.8	1590.7	126.1
5	1816.9	1690.8	126.1

DL – Factored

SUPERSTRUCTURE LIVE LOAD DIAGNOSTICS - LL NO. 1.

HS20-44 AASHTO LOADING WITHOUT ALTERNATIVE (FACTORED)

MEM NO.	NUMBER OF LIVE LOAD LANES SUPERSTRUCTURE LT.END	SUPERSTRUCTURE RT.END	SUBSTRUCTURE LT.END	SUBSTRUCTURE RT.END
1	6.745	6.745	1.0	1.0
2	6.745	6.745	1.0	1.0
3	6.745	6.745	1.0	1.0

No. of design live load lanes
= (43.5 feet / 7) wheel lines x (1 live load lane)/(2 wheel lines)
= 3.107 live load lanes

For factored results, factors may be applied to the number of lanes:
(1.3) x (1.67) x (3.107) = 6.745 factored live load lanes

AASHTO IMPACT FACTORS CALCULATED BY PROGRAM

MEM NO	IMPACT %
1	25.6
2	21.3
3	24.4

HS20 – Factored

LL NO. 1. NEGATIVE LIVE LOAD MOMENT ENVELOPE AND ASSOCIATED SHEARS (FACTORED)

MEM NO	LEFT	.1 PT	.2 PT	.3 PT	.4 PT	.5 PT	.6 PT	.7 PT	.8 PT	.9 PT	RIGHT
1	0.	-473.	-946.	-1418.	-1891.	-2364.	-2837.	-3309.	-3782.	-4730.	-7039.
SHEAR	0.0	-67.5	-67.5	-67.5	-67.5	-67.5	-67.5	-67.5	-67.5	-112.6	-381.9
2	-7704.	-3858.	-1967.	-1609.	-1368.	-1449.	-1530.	-1967.	-2410.	-4186.	-8041.
SHEAR	405.2	281.3	32.5	32.5	-7.4	-7.4	-7.4	-40.3	-40.3	-133.3	-408.0
3	-7595.	-4819.	-3482.	-3047.	-2612.	-2176.	-1741.	-1306.	-871.	-435.	0.
SHEAR	400.3	295.5	54.4	54.4	54.4	54.4	54.4	54.4	54.4	54.4	0.0

LL NO. 1. POSITIVE LIVE LOAD MOMENT ENVELOPE AND ASSOCIATED SHEARS (FACTORED)

MEM NO	LEFT	.1 PT	.2 PT	.3 PT	.4 PT	.5 PT	.6 PT	.7 PT	.8 PT	.9 PT	RIGHT
1	0.	3037.	5058.	6136.	6595.	6424.	5738.	4403.	2609.	1018.	810.
SHEAR	0.0	433.8	361.3	269.6	201.6	-250.3	-315.4	-404.1	-461.9	-185.0	11.6
2	1133.	1222.	3660.	6022.	7529.	7984.	7592.	6144.	3810.	1165.	894.
SHEAR	-40.3	166.4	407.6	343.2	273.0	200.5	-268.1	-338.8	-404.0	-175.1	32.5
3	614.	960.	2882.	4973.	6548.	7407.	7629.	7126.	5855.	3514.	0.
SHEAR	-7.7	186.3	433.2	381.0	322.2	257.8	-200.7	-268.9	-366.0	-439.2	0.0

HS20 – Factored

LL NO. 1. DEAD LOAD PLUS NEGATIVE LIVE LOAD MOMENT ENVELOPE (FACTORED)

MEM NO	LEFT	.1 PT	.2 PT	.3 PT	.4 PT	.5 PT	.6 PT	.7 PT	.8 PT	.9 PT	RIGHT
1	0.	1719.	2665.	2839.	2241.	870.	-1274.	-4190.	-7878.	-12814.	-19884.
2	-21822.	-9520.	-1079.	3919.	6895.	7639.	6476.	3050.	-2289.	-10870.	-23436.
3	-22118.	-13350.	-7029.	-2619.	782.	3174.	4557.	4931.	4296.	2653.	0.

LL NO. 1. DEAD LOAD PLUS POSITIVE LIVE LOAD MOMENT ENVELOPE (FACTORED)

MEM NO	LEFT	.1 PT	.2 PT	.3 PT	.4 PT	.5 PT	.6 PT	.7 PT	.8 PT	.9 PT	RIGHT
1	0.	5229.	8669.	10394.	10727.	9658.	7301.	3522.	-1487.	-7066.	-12036.
2	-12985.	-4439.	4548.	11550.	15791.	17072.	15598.	11161.	3931.	-5519.	-14501.
3	-13909.	-7571.	-665.	5400.	9941.	12757.	13927.	13363.	11022.	6602.	0.

HS20 – Factored

LL NO. 1. LIVE LOAD SHEAR ENVELOPES AND ASSOCIATED MOMENTS (FACTORED)

MEMBER	1 LEFT	.1 PT	.2 PT	.3 PT	.4 PT	.5 PT	.6 PT	.7 PT	.8 PT	.9 PT	RIGHT
POS. V	508.7	433.8	361.3	292.0	227.0	167.3	113.7	67.3	37.0	18.6	11.6
MOM.	0.	3037.	5058.	6132.	6356.	5854.	4776.	3298.	876.	460.	810.
NEG. V	-67.5	-72.1	-106.9	-145.6	-201.2	-272.8	-340.7	-404.1	-461.9	-513.1	-556.8
MOM.	0.	1581.	2916.	3898.	5756.	6114.	5621.	4403.	2609.	419.	-1959.

MEMBER	2 LEFT	.1 PT	.2 PT	.3 PT	.4 PT	.5 PT	.6 PT	.7 PT	.8 PT	.9 PT	RIGHT
POS. V	554.0	506.3	447.0	379.8	308.2	235.8	166.3	103.2	54.8	32.5	32.5
MOM.	-2565.	584.	3567.	5918.	7332.	7662.	6921.	5281.	1478.	537.	894.
NEG. V	-40.3	-40.3	-58.8	-99.9	-162.0	-231.0	-303.2	-375.1	-443.0	-503.4	-552.5
MOM.	1133.	690.	3357.	5177.	6848.	7648.	7390.	6040.	3729.	744.	-2469.

MEMBER	3 LEFT	.1 PT	.2 PT	.3 PT	.4 PT	.5 PT	.6 PT	.7 PT	.8 PT	.9 PT	RIGHT
POS. V	561.1	520.1	471.0	414.9	352.7	285.5	214.3	144.5	100.2	64.4	54.4
MOM.	-2197.	409.	2878.	4958.	6430.	7106.	6835.	5660.	3532.	1896.	0.
NEG. V	-7.7	-15.6	-33.6	-69.6	-116.1	-170.0	-230.3	-296.0	-366.0	-439.2	-514.7
MOM.	614.	1120.	2153.	3899.	5574.	6802.	7371.	7104.	5855.	3514.	0.

LL NO. 1. DEAD LOAD PLUS LIVE LOAD SHEAR ENVELOPE (FACTORED)

MEMBER	1 LEFT	.1 PT	.2 PT	.3 PT	.4 PT	.5 PT	.6 PT	.7 PT	.8 PT	.9 PT	RIGHT
POS. V	877.0	691.8	508.9	329.2	153.9	-16.3	-180.1	-336.9	-477.6	-606.4	-723.7
NEG. V	300.7	185.8	40.7	-108.4	-274.3	-456.3	-634.6	-808.3	-976.5	-1138.0	-1292.1

MEMBER	2 LEFT	.1 PT	.2 PT	.3 PT	.4 PT	.5 PT	.6 PT	.7 PT	.8 PT	.9 PT	RIGHT
POS. V	1409.4	1188.3	955.7	715.0	469.9	224.2	-18.8	-255.2	-477.1	-672.8	-846.2
NEG. V	815.2	641.8	449.8	235.3	-0.2	-242.6	-488.2	-733.5	-974.9	-1208.7	-1431.2

MEMBER	3 LEFT	.1 PT	.2 PT	.3 PT	.4 PT	.5 PT	.6 PT	.7 PT	.8 PT	.9 PT	RIGHT
POS. V	1373.2	1206.1	1030.9	848.7	660.3	467.0	269.7	73.8	-96.6	-258.6	-394.6
NEG. V	804.5	670.5	526.3	364.2	191.5	11.5	-174.9	-366.7	-562.8	-762.1	-963.7

HS20 – Factored

LL NO. 1. LIVE LOAD SUPPORT RESULTS (SERVICE / UNFACTORED)

	MAX. AXIAL LOAD WITH ASSOCIATED MOMENTS			MAX. LONGITUDINAL MOMENT WITH ASSOCIATED AXIAL LOADS		
	AXIAL LOAD	MOMENT TOP	MOMENT BOT.	AXIAL LOAD	MOMENT TOP	MOMENT BOT.
SUPPORT JT. 1						
POSITIVE	75.4	0.	0.	0.0	0.	0.
NEGATIVE	-10.0	0.	0.	0.0	0.	0.
MEMBER 4						
POSITIVE	115.8	-82.	0.	64.7	208.	0.
NEGATIVE	-7.7	48.	0.	66.3	-280.	0.
MEMBER 5						
POSITIVE	119.1	57.	0.	63.7	294.	0.
NEGATIVE	-6.0	-42.	0.	65.3	-254.	0.
SUPPORT JT. 4						
POSITIVE	76.3	0.	0.	0.0	0.	0.
NEGATIVE	-8.1	0.	0.	0.0	0.	0.

***** All support results represent internal support joint reactions due to the application to the superstructure of only one truck or truck lane loading.

THE RATIO OF SUBSTRUCTURE / SUPERSTRUCTURE LOADING IS 0.148

HS20 – Service

SUPERSTRUCTURE LIVE LOAD DIAGNOSTICS - LL NO. 4.

ENVELOPE OF CALIFORNIA P-5 THROUGH P-13 TRUCK AND LANE LOADING (FACTORED)

MEM NO.	NUMBER OF LIVE LOAD LANES SUPERSTRUCTURE LT.END	SUPERSTRUCTURE RT.END	SUBSTRUCTURE LT.END	SUBSTRUCTURE RT.END
1	4.039	4.039	1.0	1.0
2	4.039	4.039	1.0	1.0
3	4.039	4.039	1.0	1.0

No. of design live load lanes
= (43.5 feet / 7) wheel lines x (1 live load lane)/(2 wheel lines)
= 3.107 live load lanes

For factored results, factors may be applied to the number of lanes:
(1.3) x (3.107) = 4.039 factored live load lanes

IMPACT FACTORS CALCULATED BY PROGRAM :

MEM NO	IMPACT %
1	25.6
2	21.3
3	24.4

P – Factored

LL NO. 4. NEGATIVE LIVE LOAD MOMENT ENVELOPE AND ASSOCIATED SHEARS (FACTORED)

MEM NO	LEFT	.1 PT	.2 PT	.3 PT	.4 PT	.5 PT	.6 PT	.7 PT	.8 PT	.9 PT	RIGHT
1	0.	-734.	-1468.	-2202.	-2936.	-3670.	-4404.	-5138.	-5871.	-6605.	-9631.
SHEAR	0.0	-104.8	-104.8	-104.8	-104.8	-104.8	-104.8	-104.8	-104.8	-104.8	-537.8
2	-11201.	-4174.	-2214.	-1811.	-1409.	-1337.	-1885.	-2432.	-2980.	-4252.	-10990.
SHEAR	734.6	553.7	36.6	36.6	36.6	-49.8	-49.8	-49.8	-49.8	-513.4	-662.7
3	-10044.	-6067.	-5393.	-4719.	-4045.	-3370.	-2696.	-2022.	-1348.	-674.	0.
SHEAR	595.8	84.3	84.3	84.3	84.3	84.3	84.3	84.3	84.3	84.3	0.0

LL NO. 4. POSITIVE LIVE LOAD MOMENT ENVELOPE AND ASSOCIATED SHEARS (FACTORED)

MEM NO	LEFT	.1 PT	.2 PT	.3 PT	.4 PT	.5 PT	.6 PT	.7 PT	.8 PT	.9 PT	RIGHT
1	0.	3048.	4773.	5968.	6645.	6281.	5730.	4188.	2125.	901.	1001.
SHEAR	0.0	435.4	340.9	249.4	150.3	-182.4	-281.1	-376.8	-466.6	14.3	14.3
2	1401.	853.	2870.	6829.	9263.	10038.	9358.	7010.	3143.	604.	1007.
SHEAR	-49.8	-49.8	551.2	403.4	262.2	122.1	-254.0	-395.7	-543.0	36.6	36.6
3	691.	622.	2271.	5088.	7012.	8016.	8231.	7577.	5902.	3743.	0.
SHEAR	-8.6	-8.6	522.2	408.7	306.1	197.5	-151.7	-255.4	-368.8	-467.9	0.0

P – Factored

LL NO. 4. DEAD LOAD PLUS NEGATIVE LIVE LOAD MOMENT ENVELOPE (FACTORED)

MEM NO	LEFT	.1 PT	.2 PT	.3 PT	.4 PT	.5 PT	.6 PT	.7 PT	.8 PT	.9 PT	RIGHT
1	0.	1458.	2143.	2056.	1196.	-436.	-2841.	-6018.	-9968.	-14690.	-22476.
2	-25319.	-9835.	-1327.	3717.	6853.	7751.	6122.	2585.	-2860.	-10936.	-26386.
3	-24568.	-14598.	-8940.	-4291.	-651.	1980.	3602.	4215.	3819.	2414.	0.

LL NO. 4. DEAD LOAD PLUS POSITIVE LIVE LOAD MOMENT ENVELOPE (FACTORED)

MEM NO	LEFT	.1 PT	.2 PT	.3 PT	.4 PT	.5 PT	.6 PT	.7 PT	.8 PT	.9 PT	RIGHT
1	0.	5240.	8384.	10226.	10777.	9514.	7293.	3308.	-1971.	-7183.	-11844.
2	-12717.	-4808.	3758.	12358.	17525.	19126.	17364.	12027.	3263.	-6080.	-14389.
3	-13832.	-7909.	-1276.	5515.	10405.	13366.	14529.	13814.	11069.	6831.	0.

P – Factored

LL NO. 4. LIVE LOAD SHEAR ENVELOPES AND ASSOCIATED MOMENTS (FACTORED)

MEMBER	1 LEFT	.1 PT	.2 PT	.3 PT	.4 PT	.5 PT	.6 PT	.7 PT	.8 PT	.9 PT	RIGHT
POS. V	537.6	435.4	340.9	249.4	150.3	61.1	14.3	14.3	14.3	14.3	14.3
MOM.	0.	3048.	4773.	5968.	6645.	6281.	601.	701.	801.	901.	1001.
NEG. V	-104.8	-104.8	-104.8	-104.8	-163.4	-246.8	-332.8	-436.5	-527.9	-622.0	-720.9
MOM.	0.	-734.	-1468.	-2202.	4681.	4029.	2891.	1265.	-1795.	-4108.	-8569.

MEMBER	2 LEFT	.1 PT	.2 PT	.3 PT	.4 PT	.5 PT	.6 PT	.7 PT	.8 PT	.9 PT	RIGHT
POS. V	845.2	699.9	558.0	413.2	288.0	183.4	98.7	36.6	36.6	36.6	36.6
MOM.	-10452.	-2916.	2519.	6334.	6691.	6038.	4250.	-201.	202.	604.	1007.
NEG. V	-49.8	-49.8	-49.8	-49.8	-105.5	-185.7	-286.5	-406.5	-550.4	-692.2	-838.0
MOM.	1401.	853.	305.	-242.	4563.	6195.	6800.	6460.	2757.	-3217.	-10078.

MEMBER	3 LEFT	.1 PT	.2 PT	.3 PT	.4 PT	.5 PT	.6 PT	.7 PT	.8 PT	.9 PT	RIGHT
POS. V	766.4	662.7	554.4	446.5	341.6	245.8	173.5	114.4	84.3	84.3	84.3
MOM.	-8260.	-4306.	209.	2487.	5308.	6086.	5541.	4489.	-1348.	-674.	0.
NEG. V	-8.6	-8.6	-8.6	-8.6	-21.3	-76.8	-151.7	-255.4	-368.8	-467.9	-586.6
MOM.	691.	622.	553.	484.	1024.	3074.	8231.	7577.	5902.	3743.	0.

LL NO. 4. DEAD LOAD PLUS LIVE LOAD SHEAR ENVELOPE (FACTORED)

MEMBER	1 LEFT	.1 PT	.2 PT	.3 PT	.4 PT	.5 PT	.6 PT	.7 PT	.8 PT	.9 PT	RIGHT
POS. V	905.8	693.3	488.5	286.6	77.2	-122.4	-279.6	-389.9	-500.3	-610.6	-721.0
NEG. V	263.4	153.1	42.7	-67.6	-236.5	-430.3	-626.6	-840.7	-1042.5	-1246.9	-1456.2

MEMBER	2 LEFT	.1 PT	.2 PT	.3 PT	.4 PT	.5 PT	.6 PT	.7 PT	.8 PT	.9 PT	RIGHT
POS. V	1700.6	1382.0	1066.6	748.4	449.8	171.7	-86.3	-321.9	-495.3	-668.7	-842.1
NEG. V	805.7	632.3	458.8	285.4	56.3	-197.4	-471.6	-765.0	-1082.3	-1397.5	-1716.7

MEMBER	3 LEFT	.1 PT	.2 PT	.3 PT	.4 PT	.5 PT	.6 PT	.7 PT	.8 PT	.9 PT	RIGHT
POS. V	1578.6	1348.7	1114.3	880.3	649.3	427.3	228.9	43.7	-112.6	-238.7	-364.8
NEG. V	803.5	677.4	551.3	425.1	286.3	104.7	-96.3	-326.1	-565.7	-790.9	-1035.6

P – Factored

LL NO. 4. LIVE LOAD SUPPORT RESULTS (SERVICE / UNFACTORED)

	MAX. AXIAL LOAD WITH ASSOCIATED MOMENTS			MAX. LONGITUDINAL MOMENT WITH ASSOCIATED AXIAL LOADS		
	AXIAL LOAD	MOMENT TOP	MOMENT BOT.	AXIAL LOAD	MOMENT TOP	MOMENT BOT.
SUPPORT JT. 1						
POSITIVE	133.1	0.	0.	0.0	0.	0.
NEGATIVE	-26.0	0.	0.	0.0	0.	0.
MEMBER 4						
POSITIVE	306.5	-263.	0.	142.5	391.	0.
NEGATIVE	-15.9	99.	0.	207.3	-725.	0.
MEMBER 5						
POSITIVE	310.0	142.	0.	200.2	761.	0.
NEGATIVE	-11.2	-78.	0.	153.9	-524.	0.
SUPPORT JT. 4						
POSITIVE	145.2	0.	0.	0.0	0.	0.
NEGATIVE	-20.9	0.	0.	0.0	0.	0.

***** All support results represent internal support joint reactions due to the application to the superstructure of only one truck or truck lane loading.

THE RATIO OF SUBSTRUCTURE / SUPERSTRUCTURE LOADING IS 0.248

P – Service

2.37.2 Service Loads – BDS

```
*************************************************
INPUT FILE FOR BDS PROGRAM    - SERVICE RESULTS -
*************************************************
        1 1 2P H 700     0   0 3250    0150   0   0   0   0 0  01          100
        2 2 3  H1100     0   0 3250    0150   0   0   0   0 0  0           100
        3 3 4 RH 800     0   0 3250    0150   0   0   0   0 0  0           100
        4 5 2P   200     0  40 3250    0150   0   0   0   0 0  0           100
        5 6 3P   200     0  40 3250    0150   0   0   0   0 0  0           100
        1   0 0  0  0 435 600 812 638 3 8110250110250 33 712 32 712      1  200
        2   0 1  0  0   0   0   0   0 0 00 0  00 0  0  0 0 0  0 0 0      0  200
        3   0 1  0  0   0   0   0   0 0 00 0  00 0  0  0 0 0  0 0 0      0  200
        4   0 0 26    0    0    0    0 2513    2514          1             201
        4  80 1  0    0    0    0    0    0       0          0             201
        4 140 0 26    0    0    0    0 3314    3580          2             201
        4 200 0 26    0    0    0    0 5714    6780          3             201
        5   0 1  0    0    0    0    0    0       0          0             201
        5  80 1  0    0    0    0    0    0       0          0             201
        5 140 2  0    0    0    0    0    0       0          0             201
        5 200 3  0    0    0    0    0    0       0          0             201
        0 1   2183U   0   0      0      0 0 BARRIER RAIL AND FUTURE AC     300
        0 2   2183U   0   0      0      0 0 BARRIER RAIL AND FUTURE AC     300
        0 3   2183U   0   0      0      0 0 BARRIER RAIL AND FUTURE AC     300
        1 3107    0 10  0     0    000                                     400
```

FRAME PROPERTIES (SERVICE)

MEM NO	JT LT	JT RT	END COND LT	END COND RT	DIR	SPAN	SUPPORT OR HINGE	E	I	Yt	DEAD LOAD UNI	DEAD LOAD SEC	CARRY OVER FACTORS LT	CARRY OVER FACTORS RT	DISTRIBUTION FACTORS LT	DISTRIBUTION FACTORS RT
1	1	2	P		H	70.0	0.0	3250.	363.38	3.49	0.000	.150	0.500	0.000	0.000	0.445
2	2	3			H	110.0	0.0	3250.	363.38	3.49	0.000	.150	0.500	0.500	0.378	0.400
3	3	4		R	H	80.0	0.0	3250.	363.38	3.49	0.000	.150	0.000	0.500	0.412	0.000
4	5	2	P			20.0	4.0	3250.	varies	--	0.000	.150	0.685	0.000	0.000	0.178
5	6	3	P			20.0	4.0	3250.	varies	--	0.000	.150	0.685	0.000	0.000	0.188

***** IF MEMBER IS HORIZONTAL SUPPORT OR HINGE FIELD EQUALS LOCATION OF HINGE FROM LEFT END OF MEMBER *****
***** IF MEMBER IS VERTICAL SUPPORT OR HINGE FIELD EQUALS SUPPORT WIDTH USED FOR MOMENT REDUCTION *****
***** Yt = distance from bottom of superstructure soffit to the centroid of the concrete superstructure.

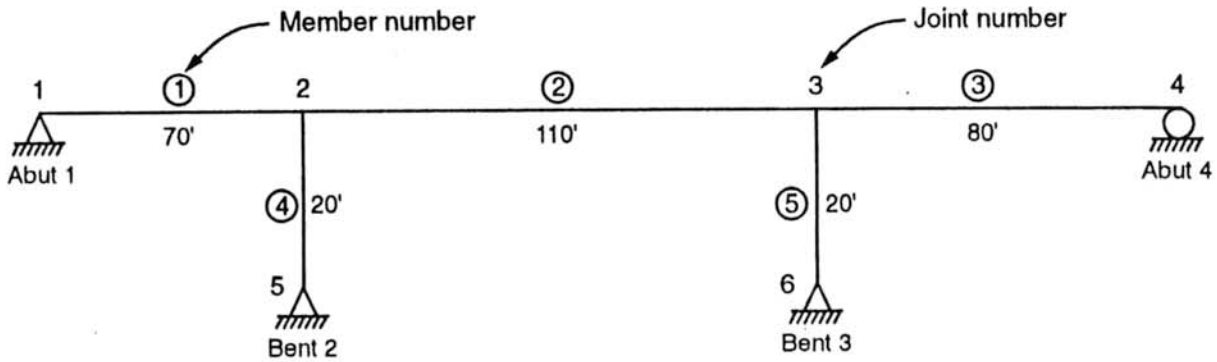

DEAD LOAD ANALYSIS *** SIDESWAY NOT CONSIDERED. FRAME CANNOT SWAY. ***

HORIZONTAL MEMBER MOMENTS TRIAL 0 (SERVICE)

MEM NO	LEFT	.1 PT	.2 PT	.3 PT	.4 PT	.5 PT	.6 PT	.7 PT	.8 PT	.9 PT	RIGHT
1	0.	1686.	2778.	3275.	3178.	2487.	1202.	-677.	-3151.	-6219.	-9881.
2	-10860.	-4355.	683.	4253.	6355.	6991.	6159.	3860.	93.	-5141.	-11843.
3	-11172.	-6562.	-2729.	329.	2610.	4116.	4845.	4798.	3975.	2375.	0.

VERTICAL MEMBER MOMENTS TRIAL 0 (SERVICE)

4	0.	-98.	-196.	-294.	-392.	-489.	-587.	-685.	-783.	-881.	-979.
5	0.	67.	134.	201.	268.	335.	402.	469.	536.	603.	671.

HORIZONTAL MEMBER SHEARS TRIAL 0 (SERVICE)

1	283.3	198.4	113.5	28.6	-56.3	-141.2	-226.0	-310.9	-395.8	-480.7	-565.6
2	658.0	524.6	391.2	257.9	124.5	-8.9	-142.3	-275.7	-409.1	-542.5	-675.9
3	624.7	527.7	430.7	333.7	236.7	139.6	42.6	-54.4	-151.4	-248.4	-345.4

VERTICAL MEMBER SHEARS TRIAL 0 (SERVICE)

4	-48.9	-48.9	-48.9	-48.9	-48.9	-48.9	-48.9	-48.9	-48.9	-48.9	-48.9
5	33.5	33.5	33.5	33.5	33.5	33.5	33.5	33.5	33.5	33.5	33.5

VERTICAL MEMBER REACTIONS TRIAL 0 (SERVICE)

MEM NO	LT REACTION	RT REACTION	MEMBER WEIGHT
4	1320.6	1223.6	97.0
5	1397.6	1300.6	97.0

DL – Service

SUPERSTRUCTURE LIVE LOAD DIAGNOSTICS - LL NO. 1.

HS20-44 AASHTO LOADING WITHOUT ALTERNATIVE (SERVICE)

MEM NO.	NUMBER OF LIVE LOAD LANES SUPERSTRUCTURE LT.END	SUPERSTRUCTURE RT.END	SUBSTRUCTURE LT.END	SUBSTRUCTURE RT.END	
1	3.107	3.107	1.0	1.0	No. of design live load lanes
2	3.107	3.107	1.0	1.0	= (43.5 feet / 7) wheel lines x (1 live load lane)/(2 wheel lines)
3	3.107	3.107	1.0	1.0	= 3.107 live load lanes

AASHTO IMPACT FACTORS CALCULATED BY PROGRAM

MEM NO	IMPACT %
1	25.6
2	21.3
3	24.4

HS20 – Service

LL NO. 1. NEGATIVE LIVE LOAD MOMENT ENVELOPE AND ASSOCIATED SHEARS (SERVICE)

MEM NO	LEFT	.1 PT	.2 PT	.3 PT	.4 PT	.5 PT	.6 PT	.7 PT	.8 PT	.9 PT	RIGHT
1	0.	-218.	-436.	-653.	-871.	-1089.	-1307.	-1524.	-1742.	-2179.	-3242.
SHEAR	0.0	-31.1	-31.1	-31.1	-31.1	-31.1	-31.1	-31.1	-31.1	-51.9	-175.9
2	-3549.	-1777.	-906.	-741.	-630.	-667.	-705.	-906.	-1110.	-1928.	-3704.
SHEAR	186.6	129.6	15.0	15.0	-3.4	-3.4	-3.4	-18.5	-18.5	-61.4	-188.0
3	-3498.	-2220.	-1604.	-1404.	-1203.	-1003.	-802.	-602.	-401.	-201.	0.
SHEAR	184.4	136.1	25.1	25.1	25.1	25.1	25.1	25.1	25.1	25.1	0.0

LL NO. 1. POSITIVE LIVE LOAD MOMENT ENVELOPE AND ASSOCIATED SHEARS (SERVICE)

MEM NO	LEFT	.1 PT	.2 PT	.3 PT	.4 PT	.5 PT	.6 PT	.7 PT	.8 PT	.9 PT	RIGHT
1	0.	1399.	2330.	2827.	3038.	2959.	2643.	2028.	1202.	469.	373.
SHEAR	0.0	199.8	166.4	124.2	92.9	-115.3	-145.3	-186.1	-212.8	-85.2	5.3
2	522.	563.	1686.	2774.	3468.	3678.	3497.	2830.	1755.	537.	412.
SHEAR	-18.5	76.7	187.7	158.1	125.8	92.4	-123.5	-156.1	-186.1	-80.6	15.0
3	283.	442.	1328.	2291.	3016.	3412.	3514.	3282.	2697.	1619.	0.
SHEAR	-3.5	85.8	199.5	175.5	148.4	118.8	-92.4	-123.9	-168.6	-202.3	0.0

HS20 – Service

LL NO. 1. DEAD LOAD PLUS NEGATIVE LIVE LOAD MOMENT ENVELOPE (SERVICE)

MEM NO	LEFT	.1 PT	.2 PT	.3 PT	.4 PT	.5 PT	.6 PT	.7 PT	.8 PT	.9 PT	RIGHT
1	0.	1468.	2342.	2622.	2307.	1398.	-105.	-2202.	-4893.	-8397.	-13123.
2	-14408.	-6132.	-223.	3511.	5726.	6323.	5454.	2953.	-1017.	-7069.	-15547.
3	-14670.	-8782.	-4333.	-1075.	1407.	3113.	4043.	4196.	3574.	2175.	0.

LL NO. 1. DEAD LOAD PLUS POSITIVE LIVE LOAD MOMENT ENVELOPE (SERVICE)

MEM NO	LEFT	.1 PT	.2 PT	.3 PT	.4 PT	.5 PT	.6 PT	.7 PT	.8 PT	.9 PT	RIGHT
1	0.	3085.	5107.	6102.	6216.	5446.	3845.	1351.	-1949.	-5750.	-9508.
2	-10338.	-3792.	2369.	7027.	9824.	10669.	9656.	6690.	1848.	-4605.	-11431.
3	-10889.	-6120.	-1401.	2620.	5626.	7527.	8359.	8080.	6672.	3994.	0.

HS20 – Service

LL NO. 1. LIVE LOAD SHEAR ENVELOPES AND ASSOCIATED MOMENTS (SERVICE)

MEMBER	1 LEFT	.1 PT	.2 PT	.3 PT	.4 PT	.5 PT	.6 PT	.7 PT	.8 PT	.9 PT	RIGHT
POS. V	234.3	199.8	166.4	134.5	104.6	77.0	52.4	31.0	17.0	8.5	5.3
MOM.	0.	1399.	2330.	2825.	2928.	2696.	2200.	1519.	404.	212.	373.
NEG. V	-31.1	-33.2	-49.2	-67.1	-92.7	-125.6	-157.0	-186.1	-212.8	-236.4	-256.5
MOM.	0.	728.	1343.	1795.	2651.	2816.	2589.	2028.	1202.	193.	-903.

MEMBER	2 LEFT	.1 PT	.2 PT	.3 PT	.4 PT	.5 PT	.6 PT	.7 PT	.8 PT	.9 PT	RIGHT
POS. V	255.2	233.2	205.9	174.9	141.9	108.6	76.6	47.6	25.2	15.0	15.0
MOM.	-1182.	269.	1643.	2726.	3377.	3530.	3188.	2433.	681.	247.	412.
NEG. V	-18.5	-18.5	-27.1	-46.0	-74.6	-106.4	-139.7	-172.8	-204.1	-231.9	-254.5
MOM.	522.	318.	1546.	2385.	3154.	3523.	3404.	2782.	1718.	343.	-1137.

MEMBER	3 LEFT	.1 PT	.2 PT	.3 PT	.4 PT	.5 PT	.6 PT	.7 PT	.8 PT	.9 PT	RIGHT
POS. V	258.4	239.6	217.0	191.1	162.5	131.5	98.7	66.6	46.2	29.6	25.1
MOM.	-1012.	188.	1326.	2284.	2962.	3274.	3149.	2607.	1627.	873.	0.
NEG. V	-3.5	-7.2	-15.5	-32.1	-53.5	-78.3	-106.1	-136.3	-168.6	-202.3	-237.1
MOM.	283.	516.	992.	1796.	2568.	3133.	3395.	3272.	2697.	1619.	0.

LL NO. 1. DEAD LOAD PLUS LIVE LOAD SHEAR ENVELOPE (SERVICE)

MEMBER	1 LEFT	.1 PT	.2 PT	.3 PT	.4 PT	.5 PT	.6 PT	.7 PT	.8 PT	.9 PT	RIGHT
POS. V	517.6	398.2	279.9	163.1	48.3	-64.1	-173.7	-279.9	-378.8	-472.2	-560.3
NEG. V	252.2	165.2	64.3	-38.4	-148.9	-266.8	-383.0	-497.1	-608.6	-717.1	-822.1

MEMBER	2 LEFT	.1 PT	.2 PT	.3 PT	.4 PT	.5 PT	.6 PT	.7 PT	.8 PT	.9 PT	RIGHT
POS. V	913.2	757.9	597.2	432.8	266.4	99.7	-65.7	-228.2	-383.9	-527.5	-660.9
NEG. V	639.5	506.1	364.2	211.8	49.8	-115.3	-282.0	-448.5	-613.2	-774.4	-930.4

MEMBER	3 LEFT	.1 PT	.2 PT	.3 PT	.4 PT	.5 PT	.6 PT	.7 PT	.8 PT	.9 PT	RIGHT
POS. V	883.2	767.3	647.7	524.8	399.1	271.1	141.3	12.2	-105.2	-218.8	-320.4
NEG. V	621.2	520.5	415.2	301.6	183.2	61.3	-63.5	-190.7	-320.0	-450.7	-582.5

HS20 – Service

LL NO. 1. LIVE LOAD SUPPORT RESULTS (SERVICE)

	MAX. AXIAL LOAD WITH ASSOCIATED MOMENTS			MAX. LONGITUDINAL MOMENT WITH ASSOCIATED AXIAL LOADS		
	AXIAL LOAD	------MOMENT------ TOP	BOT.	AXIAL LOAD	------MOMENT------ TOP	BOT.
SUPPORT JT. 1						
POSITIVE	75.4	0.	0.	0.0	0.	0.
NEGATIVE	-10.0	0.	0.	0.0	0.	0.
MEMBER 4						
POSITIVE	115.8	-82.	0.	64.7	208.	0.
NEGATIVE	-7.7	48.	0.	66.3	-280.	0.
MEMBER 5						
POSITIVE	119.1	57.	0.	63.7	294.	0.
NEGATIVE	-6.0	-42.	0.	65.3	-254.	0.
SUPPORT JT. 4						
POSITIVE	76.3	0.	0.	0.0	0.	0.
NEGATIVE	-8.1	0.	0.	0.0	0.	0.

***** All support results represent internal support joint reactions due to the application to the superstructure of only one truck or truck lane loading.

THE RATIO OF SUBSTRUCTURE / SUPERSTRUCTURE LOADING IS 0.322

HS20 – Service

2.37.3 Bent 3 Loads – Bent

```
**************************
INPUT FILE FOR BENT PROGRAM
**************************
BENT1          1 1 2C H 108     0   0 3250    0  0   0   0   0   0  0  0S  107310
BENT1          2 2 3  H 220     0   0 3250    0  0   0   0   0   0  0  0   107310
BENT1          3 3 4 CH 108     0   0 3250    0  0   0   0   0   0  0  0   107310
BENT1          4 5 2P   200     0  62 3250    0150   0   0   0   0  0  0   107310
BENT1          5 6 3P   200     0  62 3250    0150   0   0   0   0  0  0   107310
BENT1          1   0 0  0  0  88 600 812 637 0 0027  0027  0 0 0 0 0 0 0 0 1 207311
BENT1          2   0 1  0  0   0   0   0   0 0 00 0  00 0  0 0 0 0 0 0 0 0 0 207311
BENT1          3   0 1  0  0   0   0   0   0 0 00 0  00 0  0 0 0 0 0 0 0 0 0 207311
BENT1          4   0 0 26    0    0    0    0 1257    1257       0 4       207312
BENT1          4  80 4  0    0    0    0    0    0       0       0 0       207312
BENT1          4 140 0 26    0    0    0    0 1657    2670       0 5       207312
BENT1          4 200 0 26    0    0    0    0 2857   12680       0 6       207312
BENT1          5   0 4  0    0    0    0    0    0       0       0 0       207312
BENT1          5  80 4  0    0    0    0    0    0       0       0 0       207312
BENT1          5 140 5  0    0    0    0    0    0       0       0 0       207312
BENT1          5 200 6  0    0    0    0    0    0       0       0 0       207312
BENT1          0 1   3240U  49 108      0      0 0S      ADDED CAP WEIGHT  507316
BENT1          0 2   3240U   0 220      0      0 0       ADDED CAP WEIGHT  507316
BENT1          0 3   3240U   0  59      0      0 0       ADDED CAP WEIGHT  507316
BENT1              0   0   0   0 0   0  175 4000  0 0   0  0  0  0    0    307313
BENT1            1 1 2601 490                                               407314
BENT1            2 1 2601 785                                               407314
BENT1            3 2 2601 900                                               407314
BENT1            4 1 2601 785                                               407314
BENT1            119   57    0  64  294    0 310  142    0 200  761    01  557317
BENT1              0   0    0   0 0  0 390 360 0   0 0 0   0 0             807318
```

FRAME PROPERTIES

MEM NO	JT LT	JT RT	END COND LT	END COND RT	DIR	SPAN	E	I	SUPPORT OR HINGE	Yt	CARRY OVER FACTORS LT	CARRY OVER FACTORS RT	DISTRIBUTION FACTORS LT	DISTRIBUTION FACTORS RT	F'C
1	1	2	C		G	10.8	3250.	119.30	0.0	3.05	0.000	0.000	0.000	0.000	3.25
2	2	3			G	22.0	3250.	119.30	0.0	3.05	0.500	0.500	0.804	0.804	3.25
3	3	4		C	G	10.8	3250.	119.30	0.0	3.05	0.000	0.000	0.000	0.000	3.25
4	5	2	P			20.0	3250.	varies	6.2	--	0.975	0.000	0.000	0.196	3.25
5	6	3	P			20.0	3250.	varies	6.2	--	0.975	0.000	0.000	0.196	3.25

***** IF MEMBER IS HORIZONTAL SUPPORT OR HINGE FIELD EQUALS LOCATION OF HINGE FROM LEFT END OF MEMBER *****
***** IF MEMBER IS VERTICAL SUPPORT OR HINGE FIELD EQUALS SUPPORT WIDTH USED FOR MOMENT REDUCTION *****
***** Yt = distance from bottom of superstructure soffit to the centroid of the concrete superstructure.

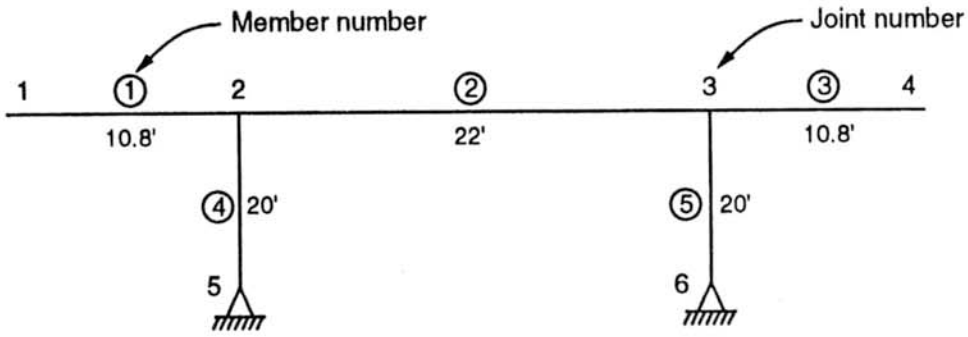

BENT 3

DEAD LOAD ANALYSIS *** SIDESWAY INCLUDED. ***

HORIZONTAL MEMBER MOMENTS TRIAL 0 (SERVICE)

MEM NO	LEFT	.1 PT	.2 PT	.3 PT	.4 PT	.5 PT	.6 PT	.7 PT	.8 PT	.9 PT	RIGHT
1	0.	0.	0.	0.	0.	-130.	-415.	-703.	-995.	-1291.	-1591.
									(face of support		-741.)
2	-1506.	-645.	-293.	43.	363.	641.	357.	58.	-257.	-587.	-1480.
	(face of support		-501.)						(face of support		-452.)
3	-1565.	-1265.	-969.	-677.	-389.	-104.	0.	0.	0.	0.	0.
	(face of support		-715.)								

VERTICAL MEMBER MOMENTS TRIAL 0 (SERVICE)

MEM NO	LEFT	.1 PT	.2 PT	.3 PT	.4 PT	.5 PT	.6 PT	.7 PT	.8 PT	.9 PT	RIGHT
4	0.	9.	17.	26.	34.	43.	51.	60.	68.	77.	85.
5	0.	-9.	-17.	-26.	-34.	-43.	-51.	-60.	-68.	-77.	-85.

HORIZONTAL MEMBER SHEARS TRIAL 0 (SERVICE)

MEM NO	LEFT	.1 PT	.2 PT	.3 PT	.4 PT	.5 PT	.6 PT	.7 PT	.8 PT	.9 PT	RIGHT
1	0.0	0.0	0.0	0.0	0.0	-261.7	-265.2	-268.7	-272.2	-275.7	-279.2
2	430.5	163.3	156.2	149.0	141.9	-125.3	-132.4	-139.6	-146.7	-153.8	-421.1
3	279.2	275.7	272.2	268.7	265.2	261.7	0.0	0.0	0.0	0.0	0.0

VERTICAL MEMBER SHEARS TRIAL 0 (SERVICE)

MEM NO	LEFT	.1 PT	.2 PT	.3 PT	.4 PT	.5 PT	.6 PT	.7 PT	.8 PT	.9 PT	RIGHT
4	4.3	4.3	4.3	4.3	4.3	4.3	4.3	4.3	4.3	4.3	4.3
5	-4.3	-4.3	-4.3	-4.3	-4.3	-4.3	-4.3	-4.3	-4.3	-4.3	-4.3

BENT 3

LIVE LOAD REACTION INPUT DATA :

STANDARD HS TRUCK					
MAX. AXIAL FORCE			MAX. LONGI MOMENT		
	MOMENT			MOMENT	
AXIAL	TOP	BOT	AXIAL	TOP	BOT
119.	57.	0.	64.	294.	0.

P-5 THROUGH P-13 TRUCKS					
MAX. AXIAL FORCE			MAX. LONGI MOMENT		
	MOMENT			MOMENT	
AXIAL	TOP	BOT	AXIAL	TOP	BOT
310.	142.	0.	200.	761.	0.

NOTE: THIS PROGRAM ANALYZES FOR LIVE LOADS ASSUMING NO SIDESWAY CAN TAKE PLACE.

BENT 3

***** STANDARD HS TRUCKS *****

DEAD LOAD MOMENT PLUS POSITIVE LIVE LOAD MOMENT ENVELOPES FOR CAP DESIGN (SERVICE)

MEM NO	LEFT	.1 PT.	.2 PT.	.3 PT.	.4 PT.	.5 PT.	.6 PT.	.7 PT.	.8 PT.	.9 PT.	RIGHT
1	0.0	0.0	0.0	0.0	0.0	-130.5	-415.0	-703.3	-995.4	-1291.3	-1591.0
2	-1599.0	-517.7	14.0	479.0	904.2	1204.2	899.0	494.6	50.4	-460.4	-1572.9
3	-1565.0	-1265.3	-969.4	-677.3	-389.0	-104.4	0.0	0.0	0.0	0.0	0.0

DEAD LOAD MOMENT PLUS NEGATIVE LIVE LOAD MOMENT ENVELOPES FOR CAP DESIGN (SERVICE)

MEM NO	LEFT	.1 PT.	.2 PT.	.3 PT.	.4 PT.	.5 PT.	.6 PT.	.7 PT.	.8 PT.	.9 PT.	RIGHT
1	0.0	0.0	0.0	0.0	-33.9	-228.6	-577.4	-930.0	-1286.4	-1646.5	-2072.9
									(face of support -976.)		
2	-1977.0	-947.6	-433.9	64.1	457.9	756.4	445.9	85.8	-390.4	-882.3	-1941.9
	(face of support -737.)								(face of support -681.)		
3	-2035.0	-1614.6	-1254.4	-898.1	-545.5	-196.7	-28.0	0.0	0.0	0.0	0.0
	(face of support -944.)										

BENT 3

THE LIVE LOADINGS USED TO GENERATE THE FOLLOWING FACTORED ENVELOPES CONSISTED OF
(A GROUP OF HS20 TRUCKS) AND/OR (A P TRUCK WITH OR WITHOUT AN HS20 TRUCK).

DEAD LOAD PLUS POSITIVE LIVE LOAD MOMENT ENVELOPE FOR CAP DESIGN (FACTORED)

MEM NO	LEFT	.1 PT.	.2 PT.	.3 PT.	.4 PT.	.5 PT.	.6 PT.	.7 PT.	.8 PT.	.9 PT.	RIGHT
1	0.0	0.0	0.0	0.0	0.0	0.0	0.0	0.0	0.0	0.0	0.0
2	0.0	-359.5	676.2	1392.4	2014.3	2479.9	2106.7	1404.1	723.6	-285.2	0.0
3	0.0	0.0	0.0	0.0	0.0	0.0	0.0	0.0	0.0	0.0	0.0

DEAD LOAD PLUS NEGATIVE LIVE LOAD MOMENT ENVELOPE FOR CAP DESIGN (FACTORED)

MEM NO	LEFT	.1 PT.	.2 PT.	.3 PT.	.4 PT.	.5 PT.	.6 PT.	.7 PT.	.8 PT.	.9 PT.	RIGHT
1	0.0	0.0	0.0	0.0	-132.1	-551.9	-1172.1	-1797.2	-2427.2	-3062.1	-3945.2
									(face of support		-1879.)
2	-3528.1	-2082.3	-1306.9	-551.9	117.2	0.0	130.4	-508.1	-1232.0	-1976.4	-3458.8
	(face of support		-1765.)						(face of support		-1672.)
3	-3865.1	-3005.1	-2370.2	-1740.2	-1115.1	-495.0	-108.9	0.0	0.0	0.0	0.0
	(face of support		-1822.)								

DEAD LOAD PLUS POSITIVE / NEGATIVE LIVE LOAD SHEAR ENVELOPE FOR CAP DESIGN (FACTORED)

MEM NO	LEFT	.1 PT.	.2 PT.	.3 PT.	.4 PT.	.5 PT.	.6 PT.	.7 PT.	.8 PT.	.9 PT.	RIGHT
1	0.0	0.0	0.0	0.0	-231.7	-572.0	-576.5	-581.1	-585.6	-590.2	-826.4
2	1025.4	617.0	545.1	472.7	400.3	-70.7	-388.0	-460.4	-532.8	-604.7	-1013.1
3	826.4	590.2	585.6	581.1	576.5	572.0	231.7	0.0	0.0	0.0	0.0

BENT 3

Part B - Design Notes

2.38.0 Service Load Design - Overview (BDS 8.15)

(Also known as Allowable or Working Stress Design)

In service load design, members are designed for the maximum load which is actually expected to occur in the member. Stresses are calculated from the loading condition. These applied stresses are then compared to allowable stresses.

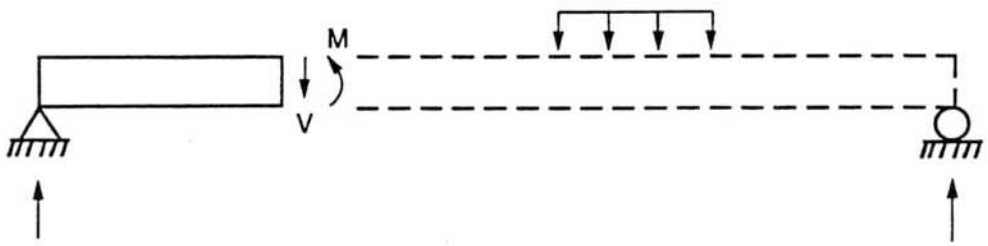

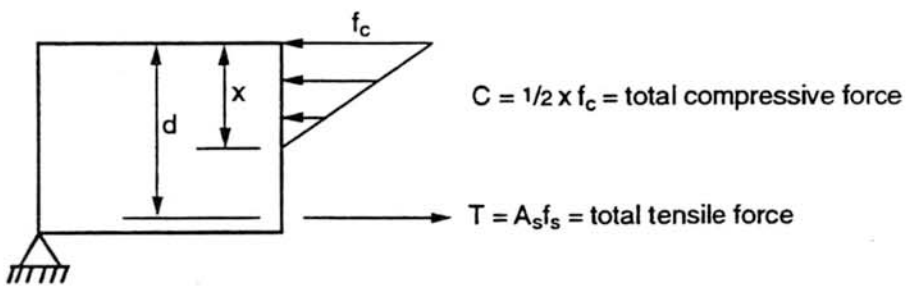

In the above figure:

Assume that concrete cannot resist tensile forces.

x = distance from extreme concrete compression fiber to the neutral axis. Note that x depends on section geometry and not on the applied load.

d = effective depth

f_c = compressive stress in the extreme concrete fiber

f_s = tensile stress in the steel

$$M = A_s f_s \left(d - \frac{x}{3}\right) = \text{internal resisting moment}$$

f_c and f_s can be calculated using the familiar formula, $f = \frac{My}{I}$

Both concrete and steel are assumed to stay well within the elastic range for the given loadings.

2.39.0 Strength Design Method Overview - (BDS 8.16)

(Also known as Load Factor Design)

This is the predominant design method used by Caltrans (see BDS 8.14). Strength design differs radically from service design. Factors are applied to the actual maximum loads which are expected to occur on a structure. Members are then designed for these factored loads which should never occur. The concrete and steel are assumed to behave inelasticity as the factored loads are approached (this is not entirely true for all parts of strength design, however it is the underlying basis for this philosophy of design). In general it is assumed that a structure designed this way will not have a catastrophic failure unless an actual factored load is applied to it.

For example:

M_u = factored moment at a section

M_n = nominal moment capacity of a section

ϕM_n = design moment capacity of a section

ϕ = strength reduction factor (safety factor)

Design Criteria is $\phi M_n \geq M_u$

The stress distribution for flexure in girders changes as the loading is increased from service loads to the nominal capacity of a section. The following figure shows the progression in the stress distribution diagram as loads are increased from service levels to the nominal capacity of a section.

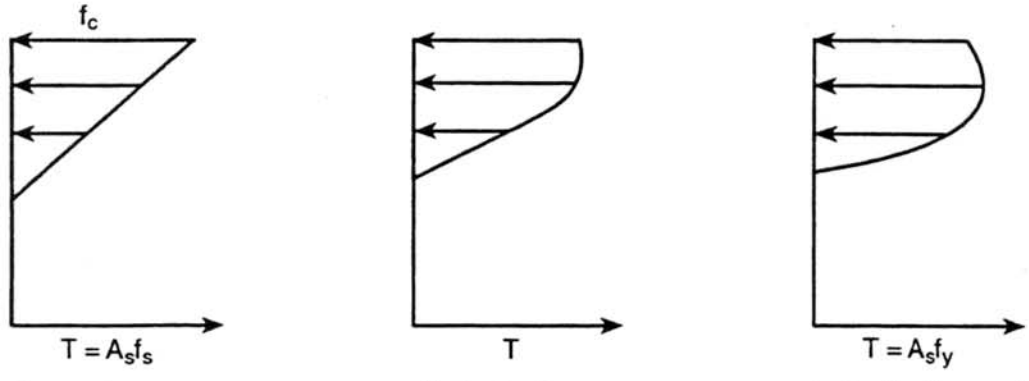

The basic criteria for design by the Strength Design Method is:

Design Strength ≥ Required Strength (BDS 8.16.1.1)

or

(Strength Reduction Factor) (Nominal Strength) ≥ (Load Factors) (Service Load Forces)

The following terms are very important if one wishes to understand the Strength Design Method.

Service Loads	-	These are the actual design loads. They are described in detail in BDS Section 3. From a designers point of view, these are the actual loads which a structure may be subjected to.
Factored Loads	-	Service loads increased by factors. The appropriate factors to use are covered in BDS 3.22.
Required Strength	-	Strength necessary to resist the factored loads and forces applied to a structure in the combinations stipulated in BDS 3.22. In determining the required strength of a section, the factored loads must be placed in such combinations and locations as to produce the maximum forces on the cross section under consideration.
Nominal Strength	-	Strength of a cross section calculated in accordance with the provisions and assumptions of the BDS Code. For flexure and axial loads, the assumptions are covered in BDS 8.16.2.
Design Strength	-	Nominal strength multiplied by a strength reduction factor, ϕ. See BDS 8.16.1.2.2 for appropriate ϕ factors.

The subscript "u" is used to denote required strengths or factored forces. The subscript "n" is used to denote nominal strengths. For example:

M_u = factored moment = required moment strength

M_n = nominal moment strength = theoretical moment strength

ϕM_n = design moment strength = usable moment strength

It should be emphasized that M_u and M_n are totally independent of each other.

M_u is determined from an elastic analysis of the structure with the factored loads applied to it.

M_n is a function of the geometry and materials present at a given cross section of a structural element. It is in no way related to the loads applied to the structure.

For moment, shear and axial loads, the basic criteria for design is:

$$\phi M_n \geq M_u$$

$$\phi V_n \geq V_u$$

$$\phi P_n \geq P_u$$

2.40.0 Face of Support - Negative Moment Design (BDS 8.8.2)

For continuous members, instead of designing for the negative moment which occurs at the center line of the support, the maximum negative design moment may be taken as the moment which occurs at the face of the support (member and support must be monolithic).

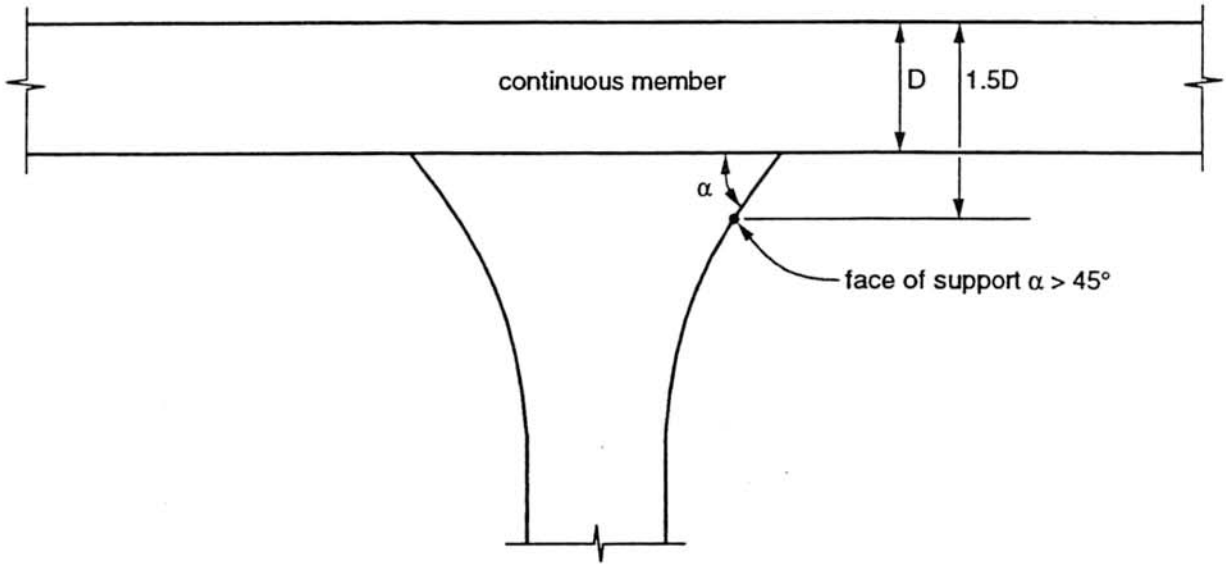

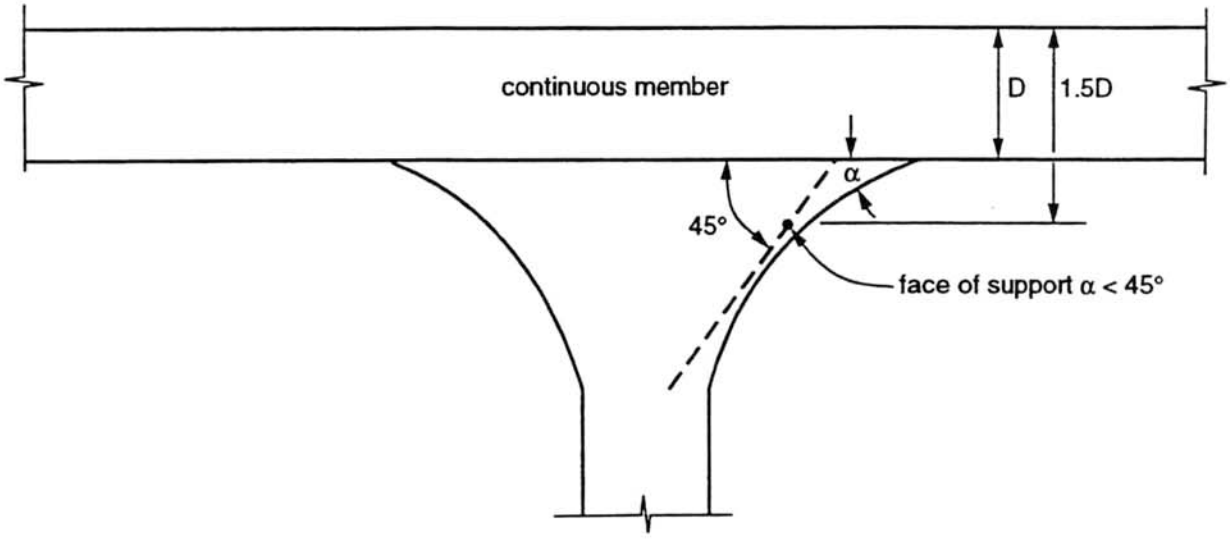

2.40.1 Example

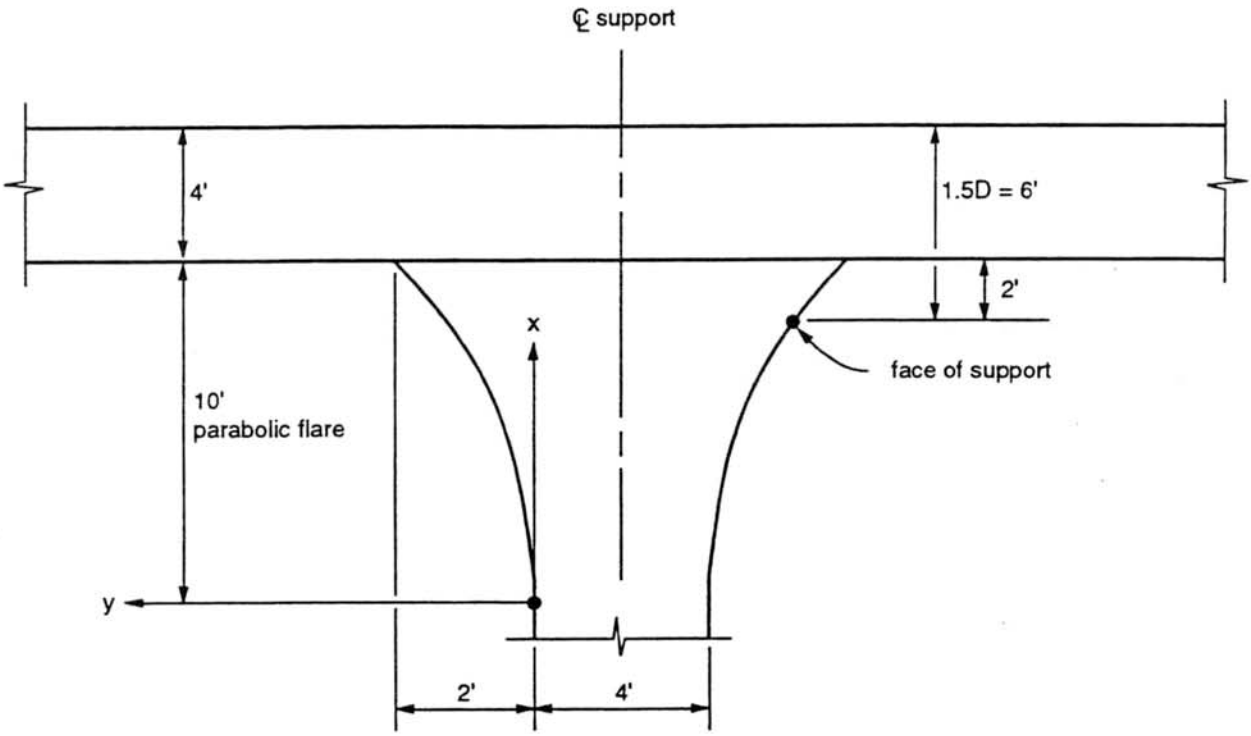

Equation of the parabolic flare (based on X-Y axis shown)

$y = ax^2$ where $y = 2'$ when $x = 10'$

$a = y/x^2 = 2/10^2 = 0.02$

$y = 0.02x^2$

Face of support occurs at $x = 10' - 2' = 8'$

$$y = (0.02)(8)^2 = 1.28'$$

Face of support occurs at 2' + 1.28' = 3.28' from the center line of the column. Use the factored negative moment at this location for the flexural steel design.

2.41.0 Cross Sections Experiencing Positive Bending

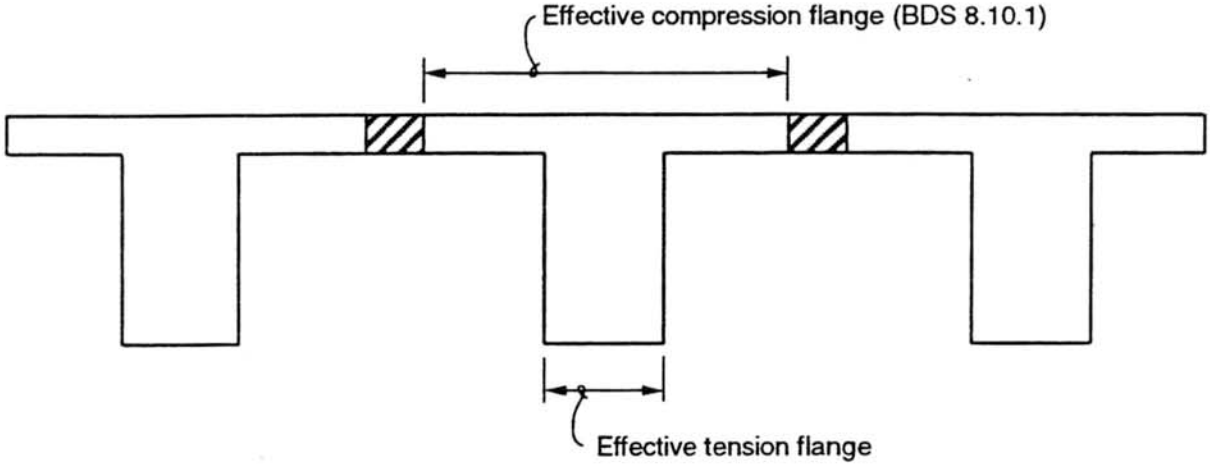

* Each "T" is designed as a single girder.

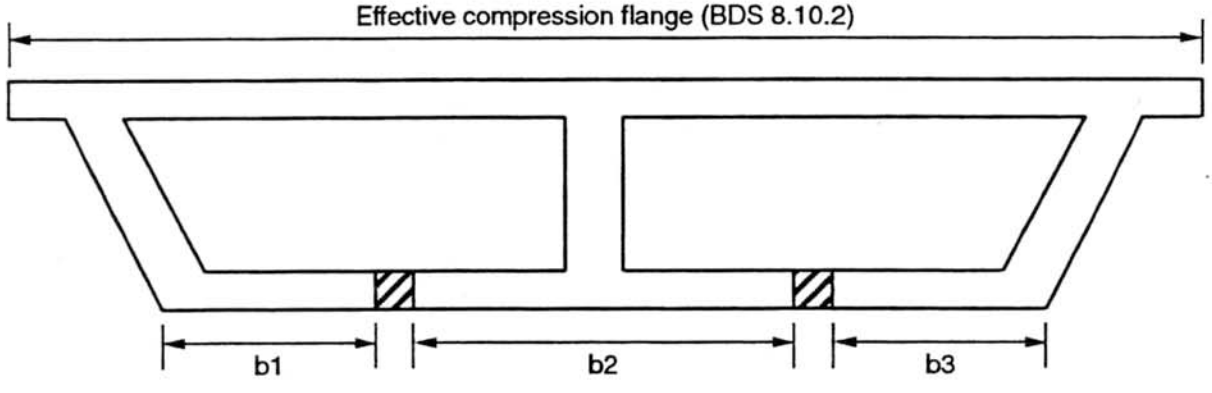

b1 + b2 + b3 = Effective tension flange (BDS 8.17.2.1.1)

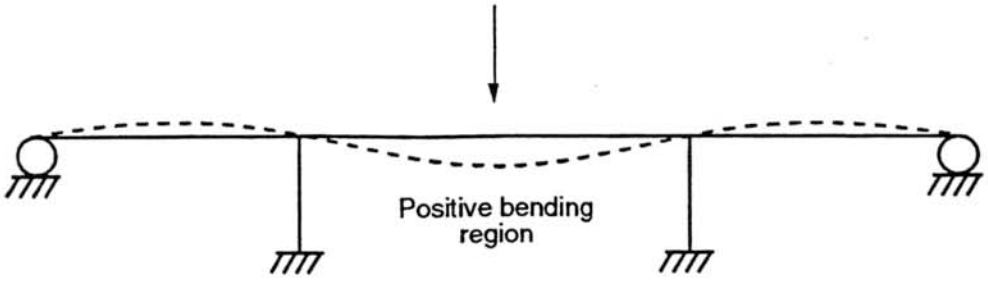

2.42.0 Cross Sections Experiencing Negative Bending

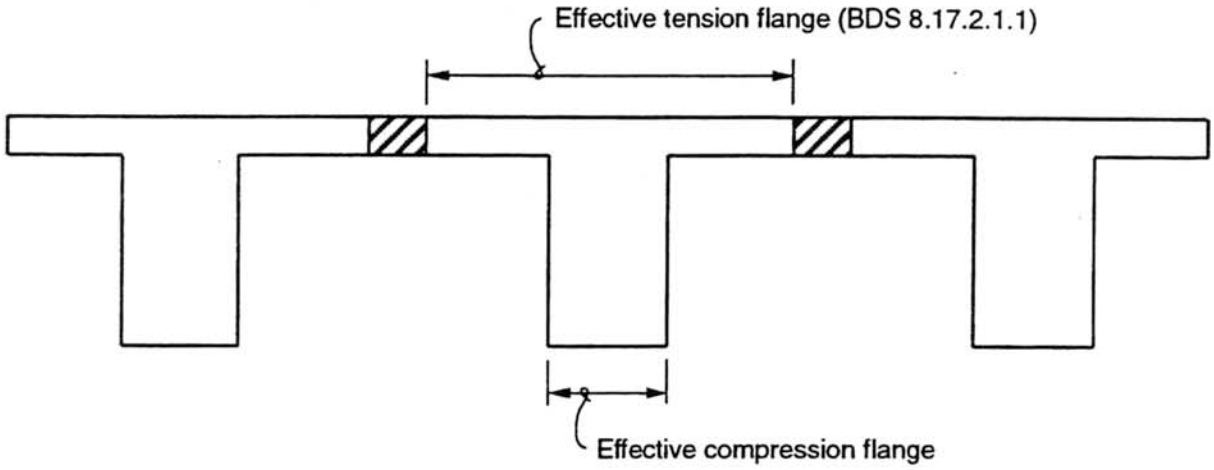

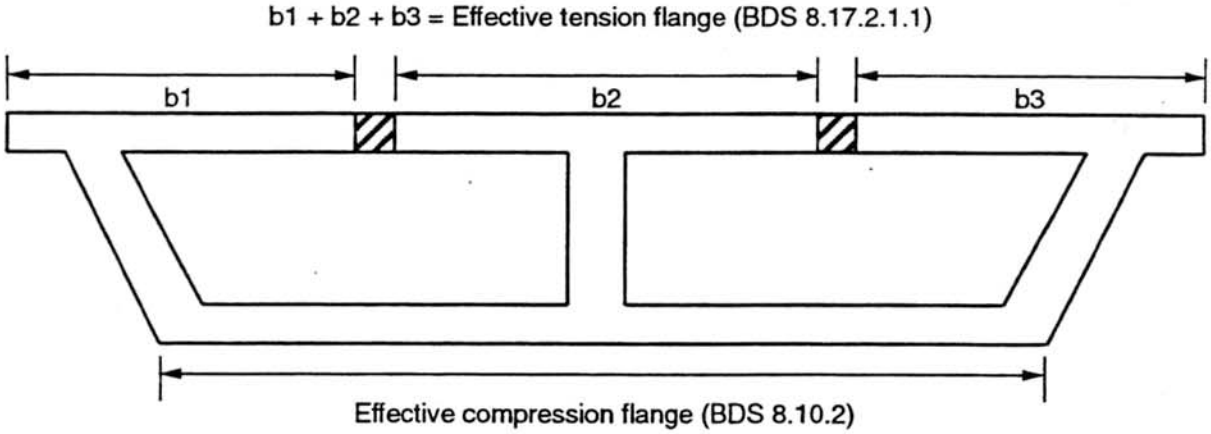

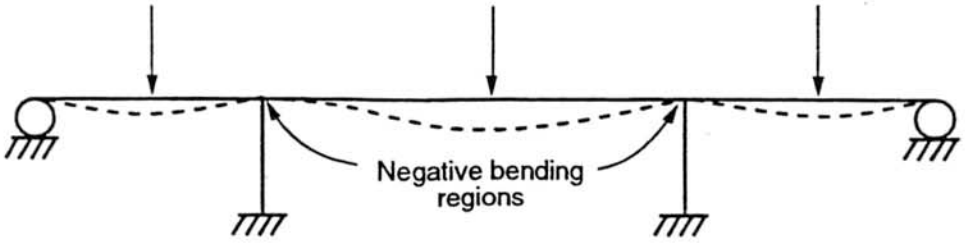

2.43.0 T-Girder Compression Flange Width (BDS 8.10.1.1) Positive Moment Case

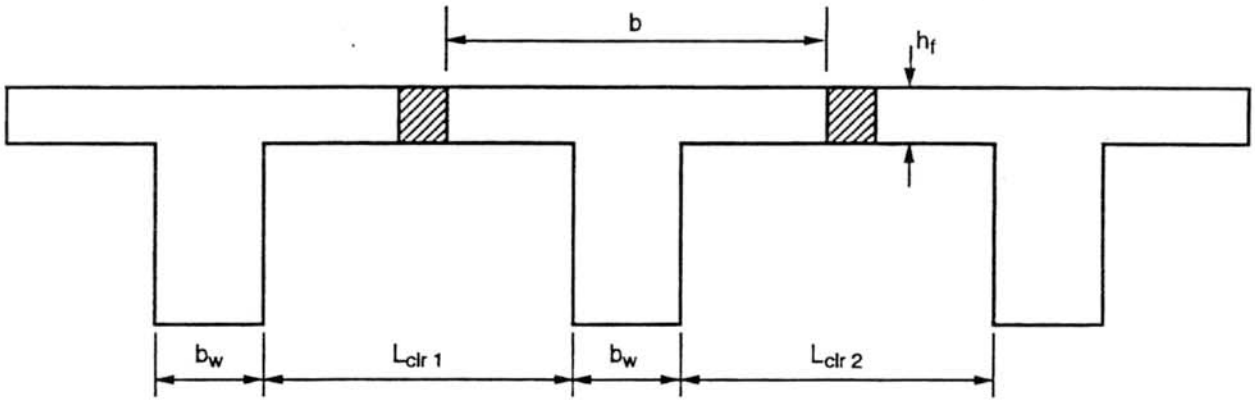

L = girder span length

For a typical exterior girder, left:

1 = lesser of $6h_f$, overhang length

2 = lesser of $6h_f$, $^1/_2\ L_{clr1}$

3 = *1* + b_w + 2

4 = $^1/_4L$

b = lesser of *3* and *4*

For a typical interior girder:

1 = lesser of $6h_f$, $^1/_2\ L_{clr\ 1}$

2 = lesser of $6h_f$, $^1/_2\ L_{clr\ 2}$

3 = 1 + b_w + 2

4 = $^1/_4L$

b = lesser of *3* and *4*

Also see BDS 8.10.1.2 – 8.10.1.4 for special considerations.