Standard Notations

(a) Rectangular Beams.

f_s = tensile unit stress in longitudinal reinforcement.

f_c = compressive unit stress in extreme fiber of concrete.

E_s = modulus of elasticity of steel.

E_c = modulus of elasticity of concrete.

$n = \frac{E_s}{E_c}$

M = bending moment, or moment of resistance in general.

A_s = effective cross sectional area of tension reinforcement.

b = width of beam.

d = effective depth, or depth from compression surface of beam to center of tension reinforcement.

k = ratio of depth of neutral axis to effective depth, d.

j = ratio of lever arm of resisting couple to depth, d.

jd = d − z = arm of resisting couple.

p = ratio of effective area of tension reinforcement to effective area of concrete in beam $= \frac{A_s}{bd}$

z = depth from compression surface of beam to resultant of compressive stresses.

(b) T-Beams.

b = width of flange.

b' = width of stem.

t = thickness of flange.

(c) Beams Reinforced for Compression.

A' = area of compressive steel.

p' = ratio of effective area of compression reinforcement to effective area of concrete in beam $= \frac{A'}{bd}$

f'_s = compressive unit stress in longitudinal reinforcement.

C = total compressive stress in concrete.

C' = total compressive stress in steel.

d' = depth from compression surface of beam to center of compression reinforcement.

z = depth from compression surface of beam to resultant of compressive stresses.

(d) Shear, Bond and Web Reinforcement.

V = total shear.

V' = external shear on any section after deducting that carried by the concrete.

v = shearing unit stress.

u = bond stress per unit of area of surface of bar.

o = perimeter of bar

Z_o = sum of perimeters of bars in one set.

a = spacing of web reinforcement bars, measured perpendicular to their direction.

s = spacing of web reinforcement bars, measured at the neutral axis and in the direction of the longitudinal axis of the beam.

A_v = total area of web reinforcement in tension within a distance, a, of the total area of all bars bent up in any one plane.

α = angle between web bars and longitudinal bars.

f_v = tensile unit stress in web reinforcement.

Design Formulas

(a) Flexure of Rectangular Reinforced Concrete Beams and Slabs

Computations of flexure in rectangular reinforced concrete beams and slabs shall be based on the following formulas:

(1) Reinforced for tension only.

Position of neutral axis,

$$k = \sqrt{2pn + (pn)^2} - pn.$$

Arm of resisting couple,

$$j = 1 - \frac{k}{3}.$$

Compressive unit stress in extreme fiber of concrete,

$$f_c = \frac{2M}{jkbd^2} = \frac{2pf_s}{k}.$$

Tensile unit stress in longitudinal reinforcement,

$$f_s = \frac{M}{A_s jd} = \frac{M}{pjbd^2}$$

Steel ratio for balanced reinforcement,

$$p = \tfrac{1}{2}\frac{1}{\frac{f_s}{f_c}\left(\frac{f_s}{nf_c} + 1\right)}.$$

Note: For approximate computations, the following assumptions may be made:

$j = \frac{7}{8}$

$k = \frac{3}{8}$

$$A_s = \frac{M}{\frac{7}{8} f_s d}$$

$$f_c = \frac{6M}{bd^2}$$

(2) Reinforced for both tension and compression:

Position of neutral axis,

$$k = \sqrt{2n\left(p + p'\frac{d'}{d}\right) + n^2\left(p + p'\right)^2} - n\left(p + p'\right).$$

Position of resultant compression,

$$z = \frac{\frac{1}{3}k^3 d + 2p'nd'\left(k - \frac{d'}{d}\right)}{k^2 + 2p'n\left(k - \frac{d'}{d}\right)}.$$

Arm of resisting couple,

$jd = d - z.$

Compressive unit stress in extreme fiber of concrete,

$$f_c = \frac{6M}{bd^2\left[3k - k^2 + \frac{6p'n}{k}\left(k - \frac{d'}{d}\right)\left(1 - \frac{d'}{d}\right)\right]}$$

Tensile stress in longitudinal reinforcement,

$$f_s = \frac{M}{pjbd^2} = nfc\left(\frac{1-k}{k}\right)$$

Compressive stress in longitudinal reinforcement,

$$f'_s = nfc\left(\frac{k - \frac{d'}{d}}{k}\right)$$

(b) Flexure of Reinforced Concrete T-Beams;

Computations of flexure in reinforced concrete T-beams shall be based on the following formulas:

(a) Neutral axis in the flange:
Use the formulas for rectangular beams and slabs.

(b) Neutral axis below the flange:
The following formulas neglect the compression in the stem:

Position of neutral axis,

$$kd = \frac{2ndA_s + bt^2}{2nA_s + 2bt}.$$

Position of resultant compression,

$$z = \left(\frac{3kd - 2t}{2kd - t}\right)\frac{t}{3}.$$

Arm of resisting couple,

$$jd = d - z.$$

Compressive unit stress in extreme fiber of concrete,

$$f_c = \frac{Mkd}{bt(kd - \frac{1}{2}t)jd} = \frac{f_s}{n}\left(\frac{k}{1-k}\right).$$

Tensile unit stress in longitudinal reinforcement,

$$f_s = \frac{M}{A_s jd}$$

(For approximate results, the formulas for rectangular beams may be used.)

The following formulas take into account the compression in the stem: they are recommended where the flange is small compared with the stem:

Position of neutral axis,

$$kd = \sqrt{\frac{2ndA_s + (b-b')t^2}{b'} + \left(\frac{nA_s + (b-b')t}{b'}\right)^2} - \frac{nA_s + (b-b')t}{b'}$$

Position of resultant compression,

$$z = \frac{(kdt^2 - \frac{2}{3}t^3)b + [(kd-t)^2(t + \frac{1}{3}(kd-t))]b'}{t(2kd-t)b + (kd-t)^2 b'}.$$

Arm of resisting couple,

$$jd = d - z.$$

Compressive unit stress in extreme fiber of concrete,

$$f_c = \frac{2Mkd}{[(2kd-t)bt + (kd-t)^2 b']jd}$$

Tensile unit stress in longitudinal reinforcement,

$$f_s = \frac{M}{A_s jd}.$$

(c) Shear, Bond and Web Reinforcement

Diagonal tension and shear in reinforced concrete beams shall be calculated by the following formulas:

Shearing unit stress,

$$v = \frac{V}{bjd}.$$

Stress in vertical web reinforcement.

$$f'_v = \frac{V's}{A_v jd}.$$

When a series of web bars or bent-up longitudinal bars is used, the web reinforcement shall be designed in accordance with the formula:

$$A_v = \frac{V_s'}{f_v jd(\sin a) + \cos(a)}$$

When the web reinforcement consists of bars bent up in a single plane so as to reinforce all sections of the beam which require it, the bent-up bars shall be designed in accordance with the formula:

$$A_v = \frac{V'}{f_v \sin a}.$$

The bond between concrete and reinforcement bars in reinforced concrete beams and slabs shall be computed by the formula:

$$u = \frac{V}{jdZ_o}.$$

(For approximate results "j," in the above formulas, may be taken as ⅞.)

The value of "Z_0" in bundled bars should reflect only the outside surface of the bundle.

Z_0 2-bar bundle = Z_0 2 bars
Z_0 3-bar bundle = Z_0 2½ bars
Z_0 4-bar bundle = Z_0 3 bars

As regards shear and bond stress for tensile steel, the above formulas apply also to beams reinforced for compression.

CONCRETE DESIGN

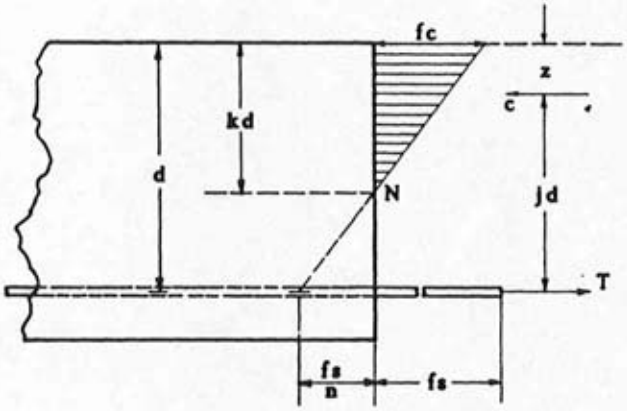

RECTANGULAR BEAM
WITHOUT COMPRESSIVE REINFORCEMENT

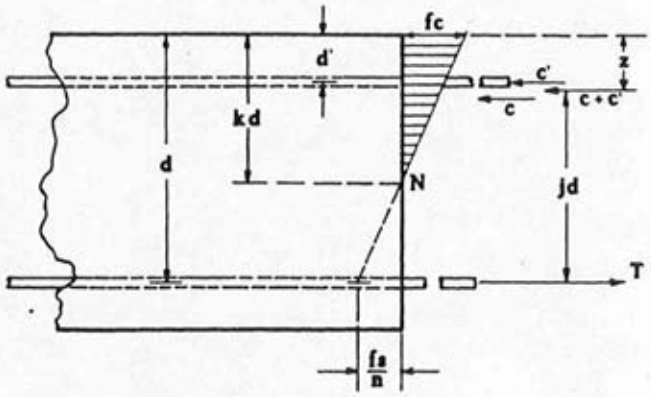

RECTANGULAR BEAM
WITH COMPRESSIVE REINFORCEMENT

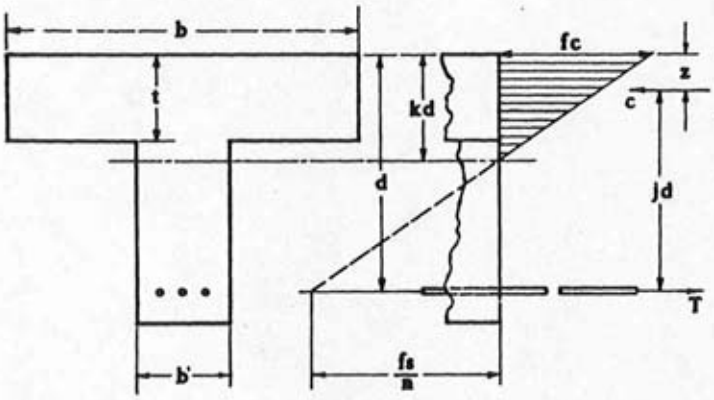

T-BEAM

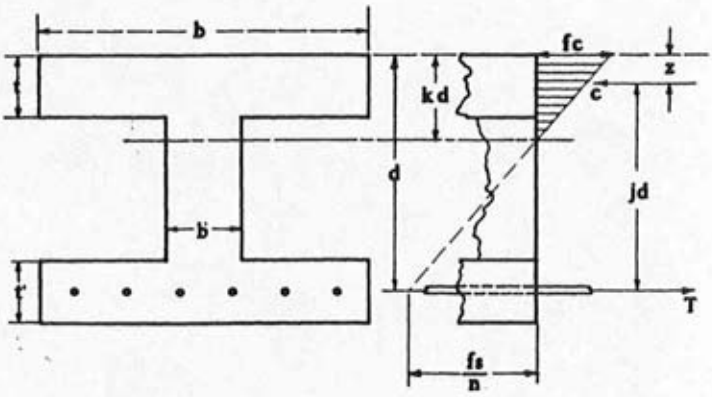

BOX GIRDER

RESISTING MOMENTS OF BEAMS AND SLABS FOR BALANCED DESIGN AND COMPRESSIVE REINFORCEMENT

NOTATION

f_c = 1,300 f_s = 24,000 psi

n = 10 for tensile reinforcement

n = 20 for compressive reinforcement

M_t = Total moment produced by external loads (ft-kips)

M = Resisting moment for balanced design (ft-kips)

M'_s = Resisting moment of compressive reinforcement (ft-kips)

A_s = Area of tensile reinforcement for balanced design (sq in)

A'_s = Area of compressive reinforcement for balanced design (sq in)

d = Effective depth of beam (inches)

d' = Embedment to center of gravity of compressive steel (inches)

b = width of girder (feet)

DESIGN CONSTANTS

j = 0.883 k = 0.351 K= 202 a=1.77

EXAMPLE I

Required:
Tensile and compressive reinforcement

Given:
A rectangular beam

d = 40" d' = 2" b = 1.5' M_t =600 ft-kips

Solution:

M for b of 1', d pf 40" = 323 ft-kips (from Table 5-11)

M for b of 1.5' = 1.5 x 323 = 484 ft-kips

M that must be provided by compressive reinforcement= 600-484=116 ft-kips

M' for d of 40", d' of 2" = 67 ft-kips per sq in (from Table 5-12,

A'_s required $= \frac{116}{67} = 1.73$ sq in

A_s for b of 1', d of 40" = 4.57 sq in (from Table 5-11)

A_s required $= \frac{600}{323} \times 4.57 = 8.50$ sq in

EXAMPLE II

Required:
Width of beam and tensile reinforcement

Given:
A rectangular beam

d = 40", d' = 2", M_t=600 ft-kips, A'_s =3.12 sq in

Solution:

M's for d of 40", d' of 2" = 67 ft-kips per sq in (from Table 5-12)

M'_s for 3.12 sq in = 3.12 x 67 = 209 ft-kips

M that must be provided by concrete=600-209=391 ft-kips

M for b of 1', d of 40"= 3.23 ft-kips (from Table 5-11)

Width of beam $= \frac{391}{323} = 1.21$ ft. say 1 ft 3 in

A_s for beam 1' wide, d of 40" = 4.57 sq in (from Table 5-11)

A_s required $= \frac{600}{323} \times 4.57 = 8.50$ sq in

T-BEAM VALUES
EXAMPLE III

Required:
Tensile and Compressive Reinforcement

Given: A T-Beam

d = 40" b = 12" b' = 66" t = 5.5" $M_t = 600^{ft\text{-}k}$

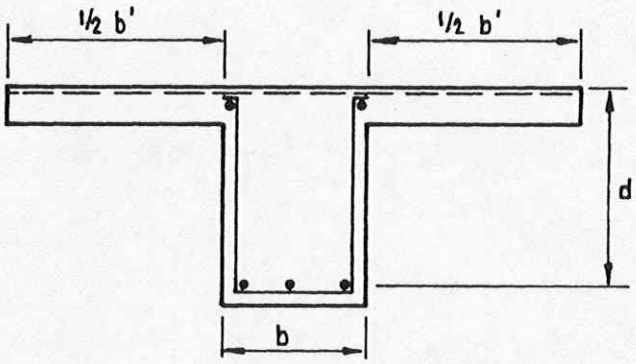

Solution:

M for b = 12", d = 40" = $323^{ft\text{-}k}$ (from Table 5-11)

M for b' = 12", d = 40 = $215^{ft\text{-}k}$ (from Table 5-10.1)

M for b' = 66, d = 40 = (66/12)x215 = $1183^{ft\text{-}k}$

M for T-Beam = $323^{ft\text{-}k} + 1183^{ft\text{-}k} = 1506^{ft\text{-}k}$

Since $1506^{ft\text{-}k} > 600^{ft\text{-}k}$, no compressive reinforcement required.

A_s for b = 12, d = 40 = 4.57□" (from Table 5-12)

A_s for T-Beam = (600/323) x 4.57 = 8.50□"

RESISTING MOMENTS FOR FLANGES OF BOX GIRDERS AND T-BEAMS (Foot-Kips)

f_c = 1,300 psi — Flange Width = 12"

DEPTH (inches)	FLANGE THICKNESS 5½"	6"	6½"	7"	7½"	8"	8½"	9"	9½"	10"	10½"	11"	11½"	12"
24	104	108	111	113	115	116	116							
26	118	123	127	130	133	135	136	136						
28	132	138	143	147	151	154	156	157	158	158				
30	146	153	159	165	169	173	176	178	180	181	181			
32	160	168	175	182	188	193	197	200	203	205	206	206		
34	174	183	192	199	206	212	217	222	225	228	230	232	233	233
36	187	198	208	217	225	232	238	244	248	252	255	258	260	261
38	201	213	224	234	244	252	259	266	271	276	281	284	287	289
40	215	229	241	252	262	272	280	288	295	301	306	311	314	317
42	230	244	257	270	281	292	302	310	318	325	332	337	342	346
44	244	259	274	288	300	312	323	333	342	350	357	364	370	375
46	258	275	290	305	319	332	344	355	365	375	383	391	398	404
48	272	290	307	323	338	352	366	378	389	400	409	418	426	433
50	286	305	324	341	357	373	387	400	413	425	435	445	454	463
52	300	321	340	359	376	393	409	423	437	450	462	473	483	492
54	314	336	357	377	396	413	430	446	461	475	488	500	511	522
56	328	352	374	395	415	434	452	469	485	500	514	528	540	552
58	343	367	390	413	434	454	473	492	509	525	541	555	569	582
60	357	382	407	430	453	475	495	514	533	551	567	583	598	612
62	371	398	424	449	472	495	517	537	557	576	594	611	627	642
64	385	413	440	467	491	515	538	560	581	601	620	638	655	672
66	399	429	457	485	511	536	560	583	605	627	647	666	684	702
68	414	444	474	503	530	556	582	606	630	652	674	694	714	732
70	428	460	491	521	549	577	604	629	654	678	700	722	743	762

RESISTING MOMENTS FOR FLANGES OF BOX GIRDERS AND T-BEAMS (Foot-Kips)

f_c = 1,300 psi — Flange Width = 12"

DEPTH (inches)	FLANGE THICKNESS 5½"	6"	6½"	7"	7½"	8"	8½"	9"	9½"	10"	10½"	11"	11½"	12"
72	442	475	507	539	569	598	625	652	678	703	727	750	772	793
74	456	491	524	557	588	618	647	675	703	729	754	778	801	823
76	470	506	541	575	607	639	669	699	727	754	781	806	830	854
78	485	522	558	593	627	659	691	722	751	780	807	834	860	884
80	499	537	575	611	646	680	713	745	776	805	834	862	889	915
82	513	553	591	629	665	700	735	768	800	831	861	890	918	945
84	527	568	608	647	685	721	757	791	824	857	888	918	948	976
86	542	584	625	665	704	742	778	814	849	882	915	946	977	1006
88	556	599	642	683	723	762	800	837	873	908	942	975	1006	1037
90	570	615	659	701	743	783	822	860	898	934	969	1003	1036	1068
92	584	630	675	719	762	804	844	884	922	959	996	1031	1065	1098
94	599	646	692	737	781	824	866	907	947	985	1023	1059	1095	1129
96	613	662	709	756	801	845	888	930	971	1011	1045	1087	1124	1156
98	627	677	726	774	820	866	910	953	995	1037	1077	1116	1154	1191
100	641	693	743	792	834	886	932	976	1020	1062	1104	1144	1183	1221
102	656	708	760	810	859	907	954	1000	1044	1088	1131	1172	1213	1252
104	670	724	776	828	879	928	976	1023	1069	1114	1158	1200	1242	1283
106	684	739	793	846	898	948	998	1046	1093	1140	1185	1229	1272	1314
108	698	755	810	864	917	969	1020	1069	1118	1165	1212	1257	1301	1345
110	713	770	827	882	937	990	1042	1093	1142	1191	1239	1285	1331	1375
112	727	786	844	900	956	1010	1064	1116	1167	1217	1266	1314	1361	1406
114	741	802	861	919	975	1031	1086	1139	1192	1243	1293	1342	1390	1437
116	756	817	877	937	995	1052	1108	1162	1216	1269	1320	1370	1420	1468
118	770	833	894	955	1014	1073	1130	1186	1241	1294	1347	1399	1449	1499
120	784	848	911	973	1034	1093	1152	1209	1265	1320	1374	1427	1479	1530

TABLE OF UNIT VALUES

EFFECTIVE DEPTH d (inches)	M (ft - kips per ft.)	A_s per ft.	Values of M'_s (ft. - kips per sq. in.) for given values of d'					
			1½"	2"	2½"	3"	4"	5"
6	7	0.69	2.7					
7	10	0.80	4.4	1.9				
8	13	0.91	6.2	3.6				
9	16	1.03	8.1	5.3	2.8			
10	20	1.14	10.0	7.1	4.4	2.1		
11	24	1.26	12.0	8.9	6.2	3.7		
12	29	1.37	13.9	10.8	8.0	5.3		
13	34	1.48	15.9	12.7	9.8	7.1	2.3	
14	40	1.60	17.9	14.7	11.6	8.8	3.8	
15	45	1.71	19.9	16.6	13.5	10.6	5.5	
16	52	1.83	21.9	18.6	15.4	12.5	7.1	2.5
17	58	1.94	23.9	20.5	17.3	14.3	8.8	4.0
18	65	2.06	25.9	22.5	19.3	16.2	10.6	5.6
19	73	2.17	27.9	24.5	21.2	18.1	12.4	7.2
20	81	2.28	29.9	26.5	23.2	20.0	14.2	8.9
21	89	2.40	32.0	28.5	25.2	22.0	16.0	10.6
22	98	2.51	34.0	30.5	27.2	23.9	17.9	12.4
23	107	2.63	36.0	32.5	29.1	25.9	19.7	14.1
24	116	2.74	38.1	34.5	31.1	27.8	21.6	15.9
26	136	2.97	42.1	38.6	35.1	31.8	25.5	19.6
28	158	3.20	46.2	42.6	39.1	35.8	29.3	23.3
30	181	3.43	50.3	46.7	43.2	39.8	33.2	27.0
32	206	3.65	54.4	50.8	47.2	43.8	37.1	30.9
34	233	3.88	58.5	55.0	51.3	47.8	41.1	34.7
36	261	4.11	62.6	59.9	55.3	52.0	45.0	38.6
38	291	4.34	67.0	63.0	59.3	55.8	49.0	42.5
40	323	4.57	70.8	67.1	63.5	59.9	53.0	46.4
42	356	4.80	74.9	71.2	67.5	63.9	57.0	50.3
44	390	5.02	78.9	75.3	71.6	68.0	61.0	54.3
46	427	5.25	83.1	79.4	75.7	72.1	65.0	58.3
48	465	5.48	87.2	83.4	79.8	76.1	69.1	62.3
50	504	5.71	91.3	87.5	83.9	80.2	73.1	66.3
52	545	5.94	95.4	91.6	87.9	84.3	77.2	70.3
54	588	6.17	99.5	95.7	92.0	88.4	81.2	74.3

TABLE OF UNIT VALUES

EFFECTIVE DEPTH d (inches)	M (ft.-kips per ft.)	A_s per ft.	Values of M's (ft.-kips per sq. in.) for given values of d'					
			1½"	2"	2½"	3"	4"	5"
56	632	6.39	103.5	99.8	96.1	92.5	85.3	78.3
58	678	6.62	107.3	103.9	100.2	96.5	89.3	82.3
60	726	6.85	111.1	108.1	104.3	100.6	93.4	86.4
62	775	7.08	114.9	112.2	108.4	104.7	97.5	90.4
64	826	7.31	118.7	116.3	112.5	108.8	101.5	94.4
66	878	7.54	122.5	120.4	116.6	112.9	105.6	98.5
68	932	7.76	126.2	124.5	120.7	117.0	109.7	102.5
70	988	7.99	130.0	128.6	124.8	121.1	113.8	106.6
72	1045	8.22	133.8	132.7	128.9	125.2	117.8	110.6
74	1104	8.45	137.6	136.8	133.0	129.3	121.9	114.7
76	1165	8.68	141.4	140.6	137.1	133.4	126.0	118.8
78	1227	8.91	145.2	144.4	141.2	137.5	130.1	122.8
80	1290	9.14	148.9	148.1	145.3	141.6	134.2	126.9
82	1356	9.36	152.7	151.9	149.4	145.7	138.3	131.0
84	1423	9.59	156.5	155.7	153.5	149.8	142.3	135.1
86	1491	9.82	160.3	159.5	157.6	153.9	146.4	139.1
88	1561	10.05	164.1	163.3	161.8	158.0	150.5	143.2
90	1633	10.28	167.9	167.1	165.9	162.1	154.6	147.3
92	1707	10.51	171.7	170.8	170.0	166.2	158.7	151.4
94	1782	10.73	175.4	174.6	173.8	170.3	162.8	155.5
96	1858	10.96	179.2	178.4	177.6	174.4	166.9	159.4
98	1936	11.19	183.0	182.2	181.4	178.5	171.0	163.6
100	2016	11.42	186.8	186.0	185.2	182.6	175.1	167.7
102	2098	11.65	190.6	189.8	189.0	186.7	179.2	171.8
104	2181	11.88	194.3	193.5	192.8	190.8	183.3	175.9
106	2266	12.10	198.1	197.3	196.5	194.9	187.4	180.0
108	2352	12.33	201.9	201.1	200.3	199.0	191.5	184.1
110	2440	12.56	205.7	204.9	204.1	203.1	195.6	188.2
112	2529	12.79	209.5	208.7	207.9	207.1	199.7	192.3
114	2620	13.02	213.3	212.5	211.7	210.9	203.8	196.4
116	2713	13.25	217.0	216.3	215.5	214.7	207.9	200.4
118	2808	13.47	220.8	220.0	219.2	218.4	212.0	204.5
120	2903	13.70	224.6	223.8	223.0	222.2	216.1	208.6

Box Girders-Moments of Inertia and Weight Tables

The following tables were prepared to aid the designer in estimating the moments of inertia and weights of box girders.

The tables are based on an interior girder using thicknesses of slabs as shown and including the fillets. Intermediate values may be obtained by straight line interpolation.

Girder flares and diaphragms have been ignored in the preparation of this information.

If the moment of inertia of the entire superstructure is required, it can be obtained by assuming the exterior girder having an "I" of approximately 0.72 to 0.78 times the "I" of an interior girder.

BOX GIRDER – MOMENTS OF INERTIA (FT 4)
INTERIOR GIRDER, STEM = 8", FILLETS = 4"

SLAB (IN)	TOP	6	6	6	6 1/8	6 1/4	6 1/4	6 1/4	6 3/8	6 1/2	6 5/8	6 3/4	7
	BOT	5 1/2	5 1/2	5 1/2	5 1/2	5 1/2	5 1/2	5 1/2	5 1/2	5 1/2	5 1/2	5 3/4	5 7/8
c-c GIRS (FT-IN)		5-9	6-0	6-3	6-6	6-9	7-0	7-3	7-6	7-9	8-0	8-3	8-6
DEPTH (FT-IN)	3-6	13.9	14.4	15.0	15.6	16.2	16.8	17.4	18.0	18.7	19.3	20.3	21.2
	3-9	16.4	17.0	17.7	18.4	19.2	19.8	20.5	21.3	22.0	22.8	23.9	25.0
	4-0	19.2	19.9	20.7	21.5	22.4	23.2	23.9	24.8	25.7	26.6	27.9	29.2
	4-3	22.2	23.0	23.9	24.9	25.9	26.8	27.6	28.7	29.7	30.7	32.3	33.8
	4-6	25.4	26.4	27.4	28.5	29.7	30.7	31.6	32.8	34.0	35.2	36.9	38.7
	4-9	28.9	30.0	31.1	32.4	33.7	34.8	35.9	37.3	38.6	40.0	42.0	43.9
	5-0	32.7	33.9	35.2	36.6	38.1	39.3	40.6	42.1	43.6	45.1	47.3	49.5
	5-3	36.7	38.1	39.5	41.1	42.7	44.1	45.5	47.2	48.8	50.5	53.1	55.5
	5-6	41.0	42.6	44.1	45.9	47.7	49.2	50.7	52.6	54.5	56.3	59.2	61.9
	5-9	45.6	47.3	48.9	50.9	52.9	54.6	56.3	58.4	60.4	62.5	65.6	68.7
	6-0	50.5	52.3	54.1	56.3	58.5	60.4	62.2	64.5	66.7	69.0	72.4	75.8
	6-3	55.6	57.6	59.6	62.0	64.4	66.4	68.4	70.9	73.4	75.9	79.7	83.4
	6-6	61.0	63.2	65.4	68.0	70.6	72.8	75.0	77.7	80.4	83.1	87.3	91.3
	6-9	66.7	69.1	71.5	74.3	77.1	79.5	81.9	84.8	87.8	90.8	95.2	99.6
	7-0	72.8	75.3	77.9	80.9	84.0	86.6	89.2	92.4	95.5	98.8	103.6	108.4
	7-3	79.1	81.8	84.6	87.9	91.2	94.0	96.8	100.2	103.7	107.1	112.4	117.6
	7-6	85.7	88.7	91.6	95.2	98.8	101.8	104.8	108.5	112.2	115.9	121.6	127.1
	7-9	92.7	95.8	99.0	102.8	106.7	109.9	113.1	117.1	121.1	125.1	131.2	137.2
	8-0	99.9	103.3	106.7	110.8	114.9	118.4	121.8	126.1	130.3	134.6	141.2	147.6
	8-3	107.5	111.2	114.8	119.1	123.5	127.2	130.9	135.4	140.0	144.6	151.6	158.5
	8-6	115.5	119.3	123.2	127.8	132.5	136.5	140.4	145.2	150.1	155.0	162.4	169.8
	8-9	123.7	127.8	131.9	136.9	141.9	146.1	150.2	155.4	160.6	165.8	173.7	181.6
	9-0	132.3	136.7	141.0	146.3	151.6	156.0	160.5	165.9	171.4	177.0	185.4	193.8
	9-3	141.3	145.9	150.5	156.1	161.7	166.4	171.1	176.9	182.7	188.6	197.6	206.5
	9-6	150.6	155.5	160.3	166.2	172.2	177.2	182.1	188.3	194.5	200.7	210.2	219.6

BOX GIRDER – GIRDER WEIGHT (K/ft)
INTERIOR GIRDER, STEM = 8", FILLETS = 4"

SLAB (IN)	TOP	6	6	6	6 1/8	6 1/4	6 1/4	6 1/4	6 3/8	6 1/2	6 5/8	6 3/4	7
	BOT	5 1/2	5 1/2	5 1/2	5 1/2	5 1/2	5 1/2	5 1/2	5 1/2	5 1/2	5 1/2	5 3/4	5 7/8
c-c GIRS (FT-IN)		5-9	6-0	6-3	6-6	6-9	7-0	7-3	7-6	7-9	8-0	8-3	8-6
DEPTH (FT-IN)	3-6	1.11	1.15	1.19	1.23	1.28	1.31	1.35	1.40	1.45	1.49	1.57	1.64
	3-9	1.14	1.17	1.21	1.26	1.30	1.34	1.38	1.42	1.47	1.52	1.59	1.67
	4-0	1.16	1.20	1.24	1.28	1.33	1.36	1.40	1.45	1.50	1.54	1.62	1.69
	4-3	1.19	1.22	1.26	1.31	1.35	1.39	1.43	1.47	1.52	1.57	1.64	1.72
	4-6	1.21	1.25	1.29	1.33	1.38	1.41	1.45	1.50	1.55	1.59	1.67	1.74
	4-9	1.24	1.27	1.31	1.36	1.40	1.44	1.48	1.52	1.57	1.62	1.69	1.77
	5-0	1.26	1.30	1.34	1.38	1.43	1.46	1.50	1.55	1.60	1.64	1.72	1.79
	5-3	1.29	1.32	1.36	1.41	1.45	1.49	1.53	1.57	1.62	1.67	1.74	1.82
	5-6	1.31	1.35	1.39	1.43	1.48	1.51	1.55	1.60	1.65	1.69	1.77	1.84
	5-9	1.34	1.37	1.41	1.46	1.50	1.54	1.58	1.62	1.67	1.72	1.79	1.87
	6-0	1.36	1.40	1.44	1.48	1.53	1.56	1.60	1.65	1.70	1.74	1.82	1.89
	6-3	1.39	1.42	1.46	1.51	1.55	1.59	1.63	1.67	1.72	1.77	1.84	1.92
	6-6	1.41	1.45	1.49	1.53	1.58	1.61	1.65	1.70	1.75	1.79	1.87	1.94
	6-9	1.44	1.47	1.51	1.56	1.60	1.64	1.68	1.72	1.77	1.82	1.89	1.97
	7-0	1.46	1.50	1.54	1.58	1.63	1.66	1.70	1.75	1.80	1.84	1.92	1.99
	7-3	1.49	1.52	1.56	1.61	1.65	1.69	1.73	1.77	1.82	1.87	1.94	2.02
	7-6	1.51	1.55	1.59	1.63	1.68	1.71	1.75	1.80	1.85	1.89	1.97	2.04
	7-9	1.54	1.58	1.61	1.66	1.70	1.74	1.78	1.82	1.87	1.92	1.99	2.07
	8-0	1.56	1.60	1.64	1.68	1.73	1.76	1.80	1.85	1.90	1.94	2.02	2.09
	8-3	1.59	1.63	1.66	1.71	1.75	1.79	1.83	1.87	1.92	1.97	2.04	2.12
	8-6	1.61	1.65	1.69	1.73	1.78	1.81	1.85	1.90	1.95	1.99	2.07	2.14
	8-9	1.64	1.68	1.71	1.76	1.80	1.84	1.88	1.92	1.97	2.02	2.09	2.17
	9-0	1.66	1.70	1.74	1.78	1.83	1.86	1.90	1.95	2.00	2.04	2.12	2.19
	9-3	1.69	1.73	1.76	1.81	1.85	1.89	1.93	1.97	2.02	2.07	2.14	2.22
	9-6	1.71	1.75	1.79	1.83	1.88	1.91	1.95	2.00	2.05	2.09	2.17	2.24

Moments of Inertia For T-Beams

Given below are three tables showing moments of inertia for reinforced concrete T-beams to be used in determining the elastic qualities of members for structural design purposes.

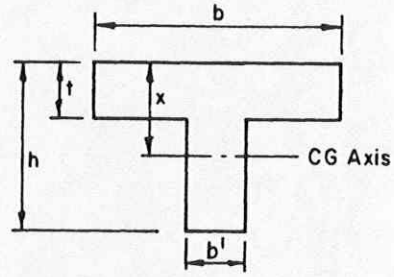

I = Moment of inertia about the C.G. axis

$I = 1/12\ bh^3\ C$

t/h	VALUES OF C											t/h
	b'/b											
	.10	.12	.14	.16	.18	.20	.22	.24	.26	.28	.30	
.05	.184	.207	.230	.250	.271	.290	.310	.328	.347	.366	.385	.05
.06	.193	.217	.240	.262	.282	.303	.322	.342	.360	.379	.398	.06
.07	.201	.226	.249	.272	.294	.314	.334	.353	.372	.391	.410	.07
.08	.207	.233	.258	.281	.302	.324	.344	.363	.383	.402	.420	.08
.09	.212	.240	.264	.288	.310	.332	.354	.373	.392	.412	.430	.09
.10	.216	.245	.270	.295	.318	.340	.361	.380	.401	.420	.439	.10
.11	.219	.249	.275	.300	.324	.346	.368	.389	.408	.428	.447	.11
.12	.222	.252	.280	.305	.329	.352	.374	.395	.416	.434	.454	.12
.13	.224	.255	.283	.309	.333	.357	.379	.401	.421	.441	.462	.13
.14	.226	.257	.286	.313	.337	.361	.384	.406	.427	.447	.466	.14
.15	.228	.259	.289	.316	.343	.365	.388	.410	.432	.452	.471	.15
.16	.229	.260	.290	.318	.344	.368	.392	.414	.436	.456	.476	.16
.17	.229	.262	.292	.320	.347	.371	.395	.418	.440	.460	.480	.17
.18	.230	.262	.293	.321	.348	.374	.398	.420	.442	.463	.483	.18
.19	.231	.264	.294	.323	.350	.375	.400	.423	.444	.466	.486	.19
.20	.231	.264	.295	.324	.351	.377	.401	.425	.447	.468	.489	.20
.21	.231	.264	.296	.325	.353	.378	.403	.427	.449	.470	.491	.21
.22	.231	.264	.296	.325	.354	.379	.404	.428	.451	.472	.493	.22
.23	.231	.265	.296	.326	.354	.380	.405	.429	.452	.474	.495	.23
.24	.231	.265	.296	.326	.354	.381	.406	.430	.453	.475	.496	.24
.25	.231	.265	.296	.326	.354	.381	.406	.430	.453	.476	.497	.25
.26	.231	.265	.296	.326	.355	.381	.407	.431	.454	.477	.498	.26
.27	.231	.265	.296	.326	.355	.382	.407	.431	.454	.478	.499	.27
.28	.231	.265	.296	.326	.355	.382	.408	.432	.455	.478	.499	.28
.29	.231	.265	.296	.326	.355	.382	.408	.432	.455	.479	.500	.29
.30	.232	.265	.296	.326	.355	.382	.408	.432	.456	.479	.500	.30

T-BEAM MOMENT OF INERTIA

t/h	VALUES OF C FOR I = 1/12 bh³ (C)											t/h
	b'/b											
	.30	.32	.34	.36	.38	.40	.42	.44	.46	.48	.50	
.05	.385	.403	.422	.440	.457	.475	.494	.511	.529	.547	.563	.05
.06	.398	.415	.434	.452	.470	.487	.505	.524	.540	.558	.574	.06
.07	.410	.428	.446	.463	.481	.499	.518	.534	.550	.568	.585	.07
.08	.420	.438	.456	.473	.491	.509	.526	.544	.561	.577	.594	.08
.09	.430	.448	.466	.484	.500	.518	.536	.553	.570	.586	.603	.09
.10	.439	.457	.475	.492	.508	.528	.544	.561	.578	.595	.611	.10
.11	.447	.466	.483	.500	.518	.535	.552	.569	.585	.602	.618	.11
.12	.454	.473	.490	.508	.526	.543	.560	.576	.592	.609	.625	.12
.13	.462	.479	.498	.515	.532	.549	.566	.583	.599	.615	.631	.13
.14	.466	.484	.502	.521	.539	.555	.572	.589	.605	.620	.637	.14
.15	.471	.489	.508	.526	.544	.562	.578	.595	.612	.626	.643	.15
.16	.476	.495	.513	.532	.548	.566	.583	.602	.616	.632	.648	.16
.17	.480	.499	.518	.536	.554	.570	.587	.604	.620	.637	.653	.17
.18	.483	.502	.521	.540	.557	.575	.592	.608	.624	.642	.656	.18
.19	.486	.506	.525	.544	.561	.579	.596	.613	.629	.645	.660	.19
.20	.489	.509	.528	.547	.565	.582	.600	.616	.632	.649	.664	.20
.21	.491	.511	.531	.550	.568	.585	.603	.619	.635	.652	.667	.21
.22	.493	.513	.533	.552	.570	.588	.605	.622	.638	.654	.670	.22
.23	.495	.515	.535	.554	.572	.590	.607	.624	.641	.657	.672	.23
.24	.496	.517	.536	.556	.574	.592	.609	.626	.643	.659	.675	.24
.25	.497	.518	.538	.557	.576	.594	.611	.628	.645	.661	.677	.25
.26	.498	.519	.539	.558	.577	.595	.612	.631	.646	.662	.678	.26
.27	.499	.520	.540	.559	.579	.596	.614	.632	.647	.664	.679	.27
.28	.499	.520	.541	.560	.580	.597	.615	.632	.648	.665	.680	.28
.29	.500	.521	.542	.561	.581	.598	.616	.633	.650	.666	.682	.29
.30	.500	.521	.543	.562	.581	.599	.616	.634	.651	.667	.683	.30

T-BEAM MOMENT OF INERTIA

t/h	VALUES OF C FOR I = 1/12 bh³ (C)										t/h
	b'/b										
	.10	.20	.30	.40	.50	.60	.70	.80	.90	1.00	
.05	.184	.290	.385	.475	.563	.653	.740	.826	.913	1.00	.05
.06	.193	.303	.398	.487	.574	.661	.748	.831	.914	1.00	.06
.07	.201	.314	.410	.499	.585	.670	.755	.836	.914	1.00	.07
.08	.207	.324	.420	.509	.594	.677	.760	.840	.918	1.00	.08
.09	.212	.332	.430	.518	.603	.684	.765	.843	.921	1.00	.09
.10	.216	.340	.439	.528	.611	.691	.770	.847	.924	1.00	.10
.11	.219	.346	.447	.535	.618	.698	.775	.850	.926	1.00	.11
.12	.222	.352	.454	.543	.625	.704	.780	.852	.928	1.00	.12
.13	.224	.357	.462	.549	.631	.709	.784	.856	.929	1.00	.13
.14	.226	.361	.466	.555	.637	.715	.789	.859	.931	1.00	.14
.15	.228	.365	.471	.562	.643	.720	.793	.863	.932	1.00	.15
.16	.229	.368	.476	.566	.648	.724	.797	.866	.934	1.00	.16
.17	.229	.371	.480	.570	.653	.728	.800	.868	.935	1.00	.17
.18	.230	.374	.483	.575	.656	.732	.803	.870	.936	1.00	.18
.19	.231	.375	.486	.579	.660	.736	.806	.873	.937	1.00	.19
.20	.231	.377	.489	.582	.664	.739	.809	.875	.938	1.00	.20
.21	.231	.378	.491	.585	.667	.742	.811	.877	.939	1.00	.21
.22	.231	.379	.493	.588	.670	.744	.813	.878	.940	1.00	.22
.23	.231	.380	.495	.590	.672	.747	.815	.880	.941	1.00	.23
.24	.231	.381	.496	.592	.675	.749	.818	.881	.942	1.00	.24
.25	.231	.381	.497	.594	.677	.751	.820	.882	.943	1.00	.25
.26	.231	.381	.498	.595	.678	.753	.821	.883	.944	1.00	.26
.27	.231	.382	.499	.596	.679	.754	.822	.884	.944	1.00	.27
.28	.231	.382	.499	.597	.680	.756	.823	.886	.945	1.00	.28
.29	.231	.382	.500	.598	.682	.757	.824	.887	.945	1.00	.29
.30	.232	.382	.500	.599	.683	.758	.826	.888	.946	1.00	.30
.31	.232	.382	.501	.599	.684	.759	.826	.888	.946	1.00	.31
.32	.233	.382	.501	.599	.684	.759	.827	.889	.946	1.00	.32
.33	.234	.382	.501	.600	.685	.760	.827	.889	.946	1.00	.33
.34	.234	.382	.501	.600	.685	.760	.828	.890	.947	1.00	.34
.35	.235	.382	.501	.600	.686	.761	.829	.890	.947	1.00	.35
.36	.236	.383	.501	.600	.686	.761	.829	.890	.947	1.00	.36
.37	.238	.383	.501	.600	.686	.761	.829	.891	.947	1.00	.37
.38	.239	.383	.502	.600	.686	.762	.829	.891	.947	1.00	.38
.39	.241	.384	.502	.600	.686	.762	.830	.891	.948	1.00	.39
.40	.242	.384	.503	.600	.686	.762	.830	.891	.948	1.00	.40
.41	.245	.385	.503	.601	.686	.762	.830	.891	.948	1.00	.41
.42	.247	.386	.503	.601	.686	.762	.830	.891	.948	1.00	.42
.43	.250	.387	.503	.601	.686	.762	.830	.892	.948	1.00	.43
.44	.252	.388	.503	.601	.686	.762	.830	.892	.948	1.00	.44
.45	.255	.390	.503	.601	.686	.762	.830	.892	.948	1.00	.45
.46	.259	.392	.504	.602	.687	.762	.830	.892	.948	1.00	.46
.47	.262	.394	.505	.602	.687	.762	.830	.892	.948	1.00	.47
.48	.266	.396	.507	.603	.687	.762	.830	.892	.948	1.00	.48
.49	.270	.398	.508	.603	.687	.762	.830	.892	.948	1.00	.49
.50	.274	.400	.509	.604	.688	.762	.830	.892	.948	1.00	.50

T-Beams - Moments of Inertia and Weight Tables

The following tables were prepared to aid the designer in estimating the moments of inertia and weights of T-Beams.

The tables are based on an interior girder using thicknesses of slabs as shown and including the fillets. Intermediate values may be obtained by straight line interpolation.

Girder flares and diaphragms have been ignored in the preparation of this information.

T – BEAM MOMENTS OF INERTIA (ft^4)
Interior Girder Stem = 11" Fillets = 4"

SLAB (in)		6	6	6	6	6-1/8	6-1/4	6-1/4	6-1/4	6-3/8	6-1/2	6-5/8	6-3/4	7	7-1/8	7-1/4	7-1/4
c-c GIRS (ft-in)		5-9	6-0	6-3	6-6	6-9	7-0	7-3	7-6	7-9	8-0	8-3	8-6	8-9	9-0	9-3	9-6
DEPTH (ft-in)	1-6	0.5	0.5	0.5	0.6	0.6	0.6	0.6	0.6	0.6	0.6	0.6	0.6	0.6	0.6	0.6	0.6
	1-9	0.8	0.8	0.9	0.9	0.9	0.9	0.9	0.9	0.9	0.9	0.9	0.9	1.0	1.0	1.0	1.0
	2-0	1.2	1.3	1.3	1.3	1.3	1.3	1.3	1.3	1.4	1.4	1.4	1.4	1.4	1.4	1.4	1.4
	2-3	1.8	1.8	1.8	1.8	1.9	1.9	1.9	1.9	1.9	1.9	2.0	2.0	2.0	2.0	2.0	2.0
	2-6	2.4	2.5	2.5	2.5	2.5	2.6	2.6	2.6	2.6	2.7	2.7	2.7	2.7	2.7	2.8	2.8
	2-9	3.2	3.2	3.3	3.3	3.4	3.4	3.4	3.5	3.5	3.5	3.6	3.6	3.6	3.7	3.7	3.7
	3-0	4.1	4.2	4.2	4.3	4.3	4.4	4.4	4.5	4.5	4.6	4.6	4.7	4.7	4.7	4.8	4.8
	3-3	5.2	5.3	5.4	5.4	5.5	5.6	5.6	5.7	5.7	5.8	5.9	5.9	6.0	6.0	6.1	6.1
	3-6	6.5	6.5	6.6	6.7	6.8	6.9	7.0	7.0	7.1	7.2	7.3	7.3	7.4	7.5	7.5	7.6
	3-9	7.9	8.0	8.1	8.2	8.3	8.4	8.5	8.6	8.7	8.8	8.9	9.0	9.1	9.2	9.2	9.3
	4-0	9.5	9.6	9.7	9.8	10.0	10.1	10.3	10.4	10.5	10.6	10.7	10.8	11.0	11.1	11.2	11.2
	4-3	11.2	11.4	11.5	11.7	11.9	12.1	12.2	12.3	12.5	12.6	12.8	12.9	13.1	13.2	13.3	13.4
	4-6	13.2	13.4	13.6	13.8	14.0	14.2	14.4	14.5	14.7	14.9	15.1	15.2	15.4	15.6	15.7	15.9
	4-9	15.4	15.6	15.8	16.0	16.3	16.5	16.7	16.9	17.1	17.4	17.6	17.8	18.0	18.2	18.4	18.5
	5-0	17.7	18.0	18.2	18.5	18.8	19.1	19.3	19.6	19.8	20.1	20.4	20.6	20.9	21.1	21.3	21.5
	5-3	20.3	20.6	20.9	21.2	21.6	21.9	22.2	22.4	22.8	23.1	23.4	23.7	24.0	24.3	24.5	24.7
	5-6	23.2	23.5	23.8	24.2	24.6	25.0	25.3	25.6	25.9	26.3	26.7	27.0	27.4	27.7	28.0	28.3
	5-9	26.2	26.6	27.0	27.4	27.8	28.3	28.6	29.0	29.4	29.8	30.2	30.6	31.1	31.5	31.8	32.1
	6-0	29.5	30.0	30.4	30.8	31.3	31.9	32.2	32.6	33.1	33.6	34.1	34.5	35.1	35.5	35.9	36.2
	6-3	33.1	33.5	34.0	34.5	35.1	35.7	36.1	36.6	37.1	37.7	38.2	38.7	39.3	39.8	40.3	40.6
	6-6	36.8	37.4	37.9	38.5	39.1	39.8	40.3	40.8	41.4	42.0	42.6	43.2	43.9	44.5	45.0	45.4

T – BEAM GIRDER WEIGHTS (K/ft.)
Interior Girder Stem = 11" Fillets = 4"

SLAB (in)		6	6	6	6	6-1/8	6-1/4	6-1/4	6-1/4	6-3/8	6-1/2	6-5/8	6-3/4	7	7-1/8	7-1/4	7-1/4
c-c GIRS (ft-in)		5-9	6-0	6-3	6-6	6-9	7-0	7-3	7-6	7-9	8-0	8-3	8-6	8-9	9-0	9-3	9-6
DEPTH (ft-in)	1-6	0.59	0.60	0.62	0.64	0.67	0.70	0.72	0.74	0.77	0.80	0.83	0.86	0.91	0.94	0.98	1.00
	1-9	0.62	0.64	0.66	0.68	0.70	0.73	0.75	0.77	0.80	0.83	0.86	0.90	0.94	0.98	1.01	1.04
	2-0	0.65	0.67	0.69	0.71	0.74	0.77	0.79	0.81	0.84	0.87	0.90	0.93	0.98	1.01	1.05	1.07
	2-3	0.69	0.71	0.73	0.74	0.77	0.80	0.82	0.84	0.87	0.90	0.93	0.97	1.01	1.05	1.08	1.10
	2-6	0.72	0.74	0.76	0.78	0.81	0.84	0.86	0.87	0.91	0.94	0.97	1.00	1.05	1.08	1.12	1.14
	2-9	0.76	0.78	0.79	0.81	0.84	0.87	0.89	0.91	0.94	0.97	1.00	1.03	1.08	1.11	1.15	1.17
	3-0	0.79	0.81	0.83	0.85	0.88	0.90	0.92	0.94	0.97	1.00	1.04	1.07	1.11	1.15	1.18	1.21
	3-3	0.83	0.84	0.86	0.88	0.91	0.94	0.96	0.98	1.01	1.04	1.07	1.10	1.15	1.18	1.22	1.24
	3-6	0.86	0.88	0.90	0.92	0.94	0.97	0.99	1.01	1.04	1.07	1.11	1.14	1.18	1.22	1.25	1.28
	3-9	0.89	0.91	0.93	0.95	0.98	1.01	1.03	1.05	1.08	1.11	1.14	1.17	1.22	1.25	1.29	1.31
	4-0	0.93	0.95	0.97	0.99	1.01	1.04	1.06	1.08	1.11	1.14	1.17	1.21	1.25	1.29	1.32	1.34
	4-3	0.96	0.98	1.00	1.02	1.05	1.08	1.10	1.12	1.15	1.18	1.21	1.24	1.29	1.32	1.36	1.38
	4-6	1.00	1.02	1.04	1.05	1.08	1.11	1.13	1.15	1.18	1.21	1.24	1.28	1.32	1.36	1.39	1.41
	4-9	1.03	1.05	1.07	1.09	1.12	1.15	1.16	1.18	1.21	1.25	1.28	1.31	1.36	1.39	1.43	1.45
	5-0	1.07	1.09	1.10	1.12	1.15	1.18	1.20	1.22	1.25	1.28	1.31	1.34	1.39	1.42	1.46	1.48
	5-3	1.10	1.12	1.14	1.16	1.19	1.21	1.23	1.25	1.28	1.31	1.35	1.38	1.42	1.46	1.49	1.52
	5-6	1.14	1.15	1.17	1.19	1.22	1.25	1.27	1.29	1.32	1.35	1.38	1.41	1.46	1.49	1.53	1.55
	5-9	1.17	1.19	1.21	1.23	1.25	1.28	1.30	1.32	1.35	1.38	1.41	1.45	1.49	1.53	1.56	1.59
	6-0	1.20	1.22	1.24	1.26	1.29	1.32	1.34	1.36	1.39	1.42	1.45	1.48	1.53	1.56	1.60	1.62
	6-3	1.24	1.26	1.28	1.29	1.32	1.35	1.37	1.39	1.42	1.45	1.48	1.52	1.56	1.60	1.63	1.65
	6-6	1.27	1.29	1.31	1.33	1.36	1.39	1.41	1.42	1.46	1.49	1.52	1.55	1.60	1.63	1.67	1.69

T-Beams - Moments of Inertia and Weight Tables

T – BEAM MOMENTS OF INERTIA (ft^4)
Interior Girder Stem = 13" Fillets = 4"

SLAB (in)	6	6	6	6	6	6-1/8	6-1/4	6-1/4	6-1/4	6-3/8	6-1/2	6-5/8	6-3/4	7	7-1/8	7-1/4
c-c GIRR (ft-in)	5-9	6-0	6-3	6-6	6-9	7-0	7-3	7-6	7-9	8-0	8-3	8-6	8-9	9-0	9-3	9-6
DEPTH (ft-in) 1-6	0.6	0.6	0.6	0.6	0.6	0.6	0.6	0.6	0.7	0.7	0.7	0.7	0.7	0.7	0.7	0.7
1-9	0.9	1.0	1.0	1.0	1.0	1.0	1.0	1.0	1.0	1.0	1.0	1.1	1.1	1.1	1.1	1.1
2-0	1.4	1.4	1.4	1.5	1.5	1.5	1.5	1.5	1.5	1.5	1.6	1.6	1.6	1.6	1.6	1.6
2-3	2.0	2.0	2.0	2.1	2.1	2.1	2.1	2.2	2.2	2.2	2.2	2.2	2.3	2.3	2.3	2.3
2-6	2.7	2.8	2.8	2.8	2.9	2.9	2.9	3.0	3.0	3.0	3.0	3.1	3.1	3.1	3.1	3.2
2-9	3.6	3.6	3.7	3.7	3.8	3.8	3.9	3.9	4.0	4.0	4.0	4.1	4.1	4.1	4.2	4.2
3-0	4.6	4.7	4.8	4.8	4.9	4.9	5.0	5.1	5.1	5.2	5.2	5.3	5.3	5.4	5.4	5.4
3-3	5.8	5.9	6.0	6.1	6.1	6.2	6.3	6.4	6.4	6.5	6.6	6.7	6.7	6.8	6.8	6.9
3-6	7.2	7.3	7.4	7.5	7.6	7.7	7.8	7.9	8.0	8.1	8.2	8.3	8.3	8.4	8.5	8.6
3-9	8.8	8.9	9.0	9.1	9.3	9.4	9.5	9.6	9.7	9.9	10.0	10.1	10.2	10.3	10.4	10.5
4-0	10.5	10.7	10.8	11.0	11.1	11.3	11.5	11.6	11.7	11.9	12.0	12.2	12.3	12.5	12.6	12.7
4-3	12.5	12.7	12.9	13.1	13.2	13.4	13.6	13.8	13.9	14.1	14.3	14.5	14.6	14.8	15.0	15.1
4-6	14.7	14.9	15.1	15.3	15.5	15.8	16.0	16.2	16.4	16.6	16.8	17.1	17.3	17.5	17.7	17.9
4-9	17.1	17.4	17.6	17.9	18.1	18.4	18.7	18.9	19.1	19.4	19.6	19.9	20.1	20.4	20.6	20.9
5-0	19.8	20.1	20.3	20.6	20.9	21.2	21.6	21.8	22.1	22.4	22.7	23.0	23.3	23.6	23.9	24.2
5-3	22.6	23.0	23.3	23.6	24.0	24.4	24.8	25.0	25.3	25.7	26.1	26.4	26.7	27.2	27.5	27.8
5-6	25.6	26.2	26.5	26.9	27.3	27.7	28.2	28.5	28.9	29.3	29.7	30.1	30.5	31.0	31.3	31.7
5-9	29.2	29.6	30.0	30.5	30.9	31.4	31.9	32.3	32.7	33.2	33.6	34.1	34.6	35.1	35.5	36.0
6-0	32.8	33.3	33.8	34.3	34.7	35.3	35.9	36.4	36.8	37.3	37.9	38.4	38.9	39.6	40.1	40.6
6-3	36.8	37.3	37.9	38.4	38.9	39.6	40.3	40.7	41.2	41.8	42.5	43.1	43.7	44.4	45.0	45.5
6-6	41.0	41.6	42.2	42.8	43.4	44.1	44.9	45.4	45.9	46.7	47.4	48.0	48.7	49.5	50.2	50.8

T – BEAM GIRDER WEIGHTS (K/ft.)
Interior Girder Stem = 13" Fillets = 4"

SLAB (in)	6	6	6	6	6	6-1/8	6-1/4	6-1/4	6-1/4	6-3/8	6-1/2	6-5/8	6-3/4	7	7-1/8	7-1/4
c-c GIRS (ft-in)	5-9	6-0	6-3	6-6	6-9	7-0	7-3	7-6	7-9	8-0	8-3	8-6	8-9	9-0	9-3	9-6
DEPTH (ft-in) 1-6	0.61	0.63	0.65	0.67	0.69	0.71	0.74	0.76	0.78	0.81	0.84	0.87	0.91	0.95	0.99	1.02
1-9	0.65	0.67	0.69	0.71	0.73	0.75	0.78	0.80	0.82	0.85	0.88	0.92	0.95	0.99	1.03	1.06
2-0	0.69	0.71	0.73	0.75	0.77	0.79	0.82	0.84	0.86	0.89	0.92	0.96	0.99	1.03	1.07	1.10
2-3	0.73	0.75	0.77	0.79	0.81	0.84	0.86	0.88	0.90	0.93	0.96	1.00	1.03	1.07	1.11	1.15
2-6	0.77	0.79	0.81	0.83	0.85	0.88	0.90	0.92	0.94	0.97	1.01	1.04	1.07	1.12	1.15	1.19
2-9	0.81	0.83	0.85	0.87	0.89	0.92	0.95	0.96	0.98	1.01	1.05	1.08	1.11	1.16	1.19	1.23
3-0	0.85	0.87	0.89	0.91	0.93	0.96	0.99	1.01	1.02	1.06	1.09	1.12	1.15	1.20	1.23	1.27
3-3	0.89	0.91	0.93	0.95	0.97	1.00	1.03	1.05	1.07	1.10	1.13	1.16	1.19	1.24	1.27	1.31
3-6	0.94	0.95	0.97	0.99	1.01	1.04	1.07	1.09	1.11	1.14	1.17	1.20	1.23	1.28	1.31	1.35
3-9	0.98	0.99	1.01	1.03	1.05	1.08	1.11	1.13	1.15	1.18	1.21	1.24	1.27	1.32	1.35	1.39
4-0	1.02	1.04	1.05	1.07	1.09	1.12	1.15	1.17	1.19	1.22	1.25	1.28	1.31	1.36	1.39	1.43
4-3	1.06	1.08	1.09	1.11	1.13	1.16	1.19	1.21	1.23	1.26	1.29	1.32	1.35	1.40	1.43	1.47
4-6	1.10	1.12	1.14	1.15	1.17	1.20	1.23	1.25	1.27	1.30	1.33	1.36	1.39	1.44	1.48	1.51
4-9	1.14	1.16	1.18	1.19	1.21	1.24	1.27	1.29	1.31	1.34	1.37	1.40	1.44	1.48	1.52	1.55
5-0	1.18	1.20	1.22	1.24	1.25	1.28	1.31	1.33	1.35	1.38	1.41	1.44	1.48	1.52	1.55	1.59
5-3	1.22	1.24	1.26	1.28	1.29	1.32	1.35	1.37	1.39	1.42	1.45	1.48	1.52	1.56	1.60	1.63
5-6	1.26	1.28	1.30	1.32	1.34	1.36	1.39	1.41	1.43	1.46	1.49	1.52	1.56	1.60	1.64	1.67
5-9	1.30	1.32	1.34	1.36	1.38	1.40	1.43	1.45	1.47	1.50	1.53	1.57	1.60	1.64	1.68	1.71
6-0	1.34	1.36	1.38	1.40	1.42	1.44	1.47	1.49	1.51	1.54	1.57	1.61	1.64	1.68	1.72	1.75
6-3	1.38	1.40	1.42	1.44	1.46	1.49	1.51	1.53	1.55	1.58	1.61	1.65	1.68	1.72	1.76	1.80
6-6	1.42	1.44	1.46	1.48	1.50	1.53	1.55	1.57	1.59	1.62	1.66	1.69	1.72	1.77	1.80	1.84

Charts For Resisting Moments-Box Girders

Given below are charts for determination of resisting moments for interior and exterior girders of box girder sections for effective depths from 30" to 90".

The graphs can be used for determining the resisting moment, value of "jd" and "A_s" required for the design moment for various effective depths, "d", with slabs of 5½", 6", 6¼", 6½", 6¾" and 7". The graphs are based on f_s=20,000 psi, n=10, and f_c as shown

It should be noted that in accordance with AASHO Specifications the effective flange width shall not exceed:

1. One-fourth the span length of the beam. (For girders with flange on one side only, use one-twelfth the span length.)
2. The distance center to center of beams.
3. Twelve times the least thickness of slab plus the width of the girder stem.

Since (3) usually governs, the graphs have been made on this basis. As long as the girder spacing is equal to or greater than that noted for any specified slab depth, the graphs can be used without modification. For girder spacings of 6'-6" or greater for any slab depth, a simple ratio will give approximate values sufficiently close for practical purposes. (Within 3%.)

For example: Slab thickness=7"; d=52.5"; f_c=1200 psi; girder spacing=6'-6". From Graph for 7" slab, M_R= 2700 ft. kips for 7'-8" girder spacing. Therefore, for 6'-6" girder spacing,

$$M_R = \frac{6.5}{7.67} \times 2700 = 2280 \text{ ft. kips.}$$

The value of "jd" is plotted as a constant for all concrete stresses for any given "d". A maximum error is on the conservative side.

The following examples demonstrate the use of the graphs:

Design:

Given a box girder with effective depth d = 52.5"; girder spacing 7'-6"; top slab = 6"; and allowable f_c= 1200 psi. The design DL+LL+I moment for the interior girder = 2000 ft. kips, and for the exterior girders = 1600 ft. kips. Required to determine if f_c is within the allowable, and the A_s required.

Since the girder spacing is greater than the 6'-8" minimum for a 6" slab the graphs can be used without modification. For d= 52.5" and f_c = 1200 psi, the maximum moment that can be applied to the interior girder= 2160 ft. kips. Therefore, f_c is less than 1200 psi. For "d" = 52.5" the value of "jd" is 49". Therefore,

$$A_s = \frac{0.6M}{jd} = \frac{.6 \times 2000}{49} = 24.5 \text{ sq. in.}$$

for the interior girder.

For the exterior girder with d = 52.5" and f_c =1200 psi, the maximum moment that can be applied is 1280 ft. kips. Therefore, compressive steel must be used since the moment applied on the exterior girder is 1600 ft. kips. Value of jd = 48.5".

$$\text{Tensile } A_s = \frac{.6 \times 1600}{48.5} = 19.8 \text{ sq. in.}$$

(See Article 6-9 of Vol. I, BP&DM) By using Table on page 5-12 of Vol. III BP&DM (Assume d'= 2½) A'_s = $\frac{1600-1280}{66.5}$= 4.8□".

INVESTIGATION:

Given a box girder with effective depth= 62.5", slab =6" and girder spacing=7'-3", allowable f_c =1200 psi.

Interior girder:

Furnished A_s=25.0 sq. in. M for DL+LL+I=2700 ft. kips

Exterior girder:

Furnished A =17.2 sq. in. M for DL+LL+I=1600 ft. kips

From the graph it can be seen that the interior and exterior girder stresses will result in f_c less than 1200 psi provided that f_s =20,000 psi or less.

For Interior Girder required $A_s = \frac{.6 \times 2700}{58.5} = 27.5$ sq. in.

For Exterior Girder required $A = \frac{.6 \times 1600}{58} = 16.5$ sq. in.

By inspection since the furnished A_s for the interior girder is less than the required A_s, the f_s is greater than 20,000 psi. Therefore, steel must be added to than 20,000 psi. Therefore, steel must be added to equal or exceed that required as calculated to bring f_s equal to or less than 20,000 psi.

For the exterior girder, A_s furnished is greater than that required. Therefore, the f_s is less than 20,000 psi. As there is less than one #11 bar difference, this steel should be left as is.

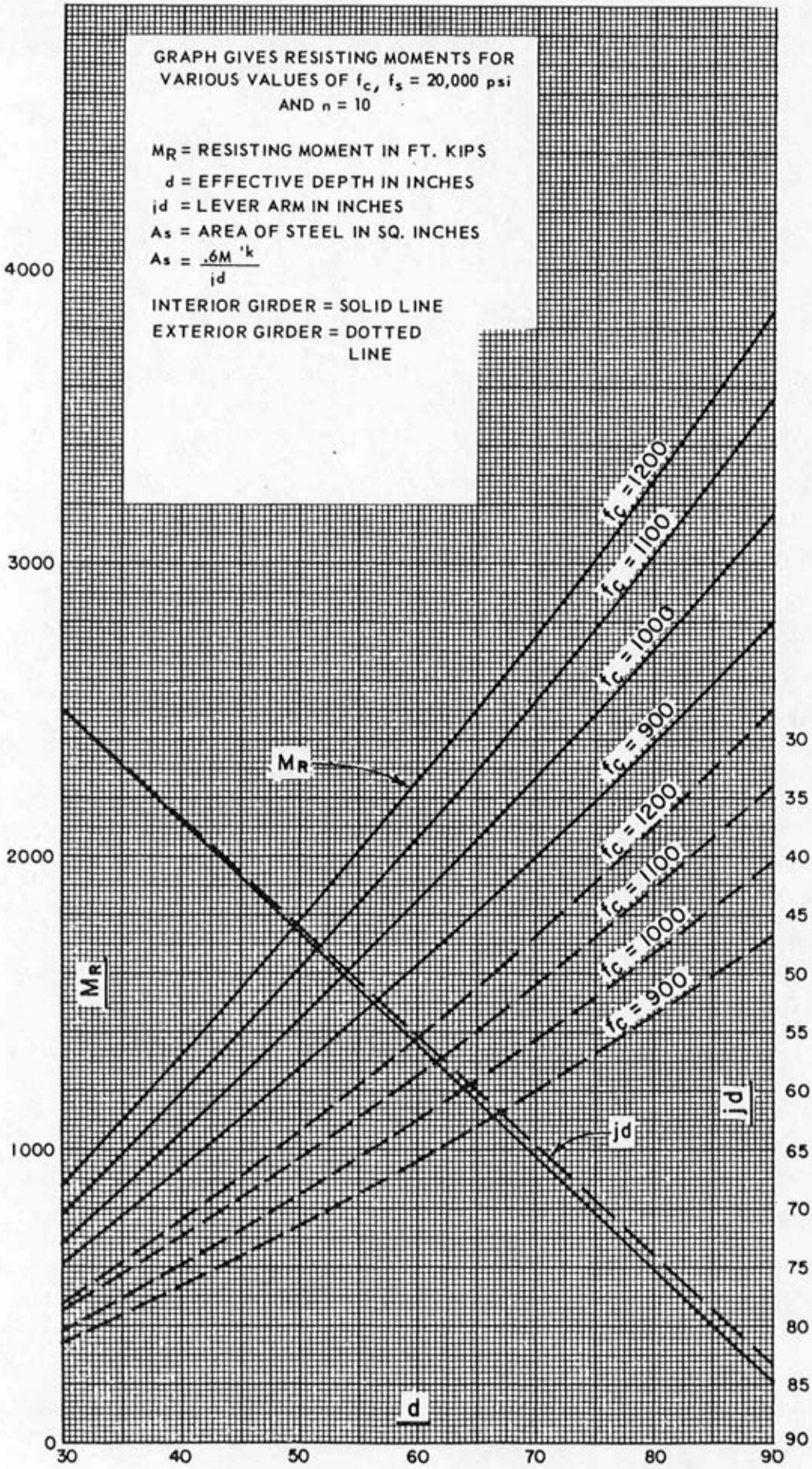

SLAB = 5½"

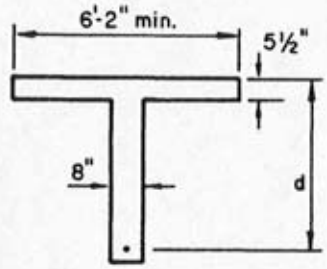

INTERIOR GIRDER

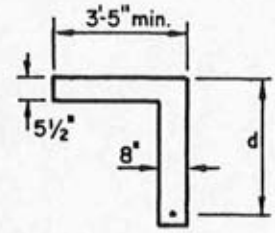

EXTERIOR GIRDER

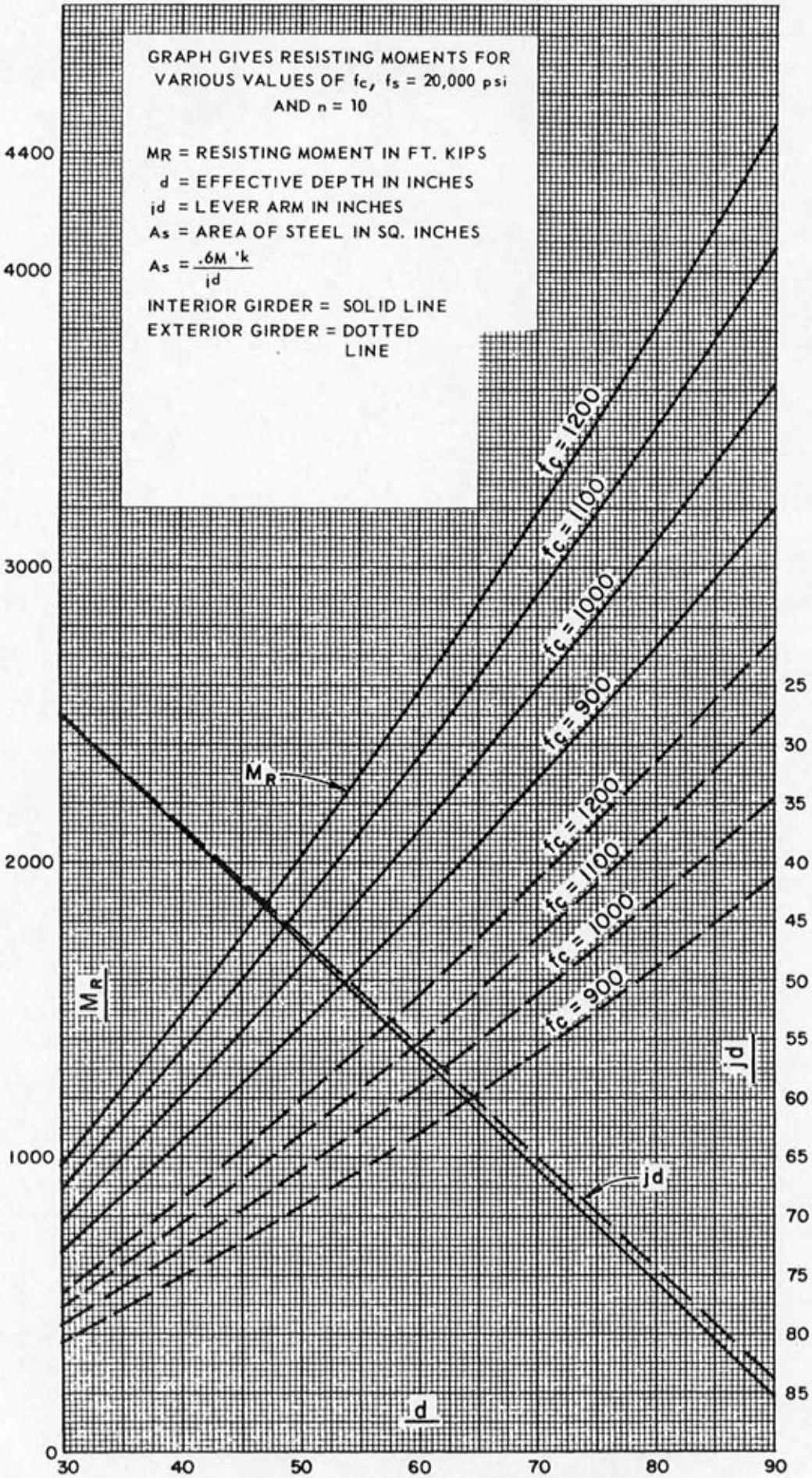

SLAB = 6"

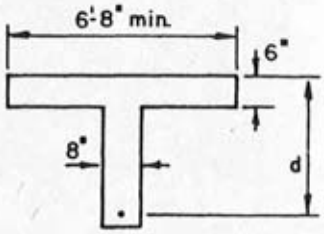

INTERIOR GIRDER

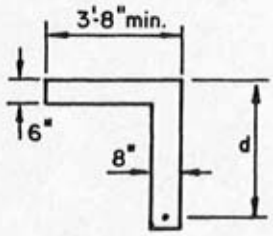

EXTERIOR GIRDER

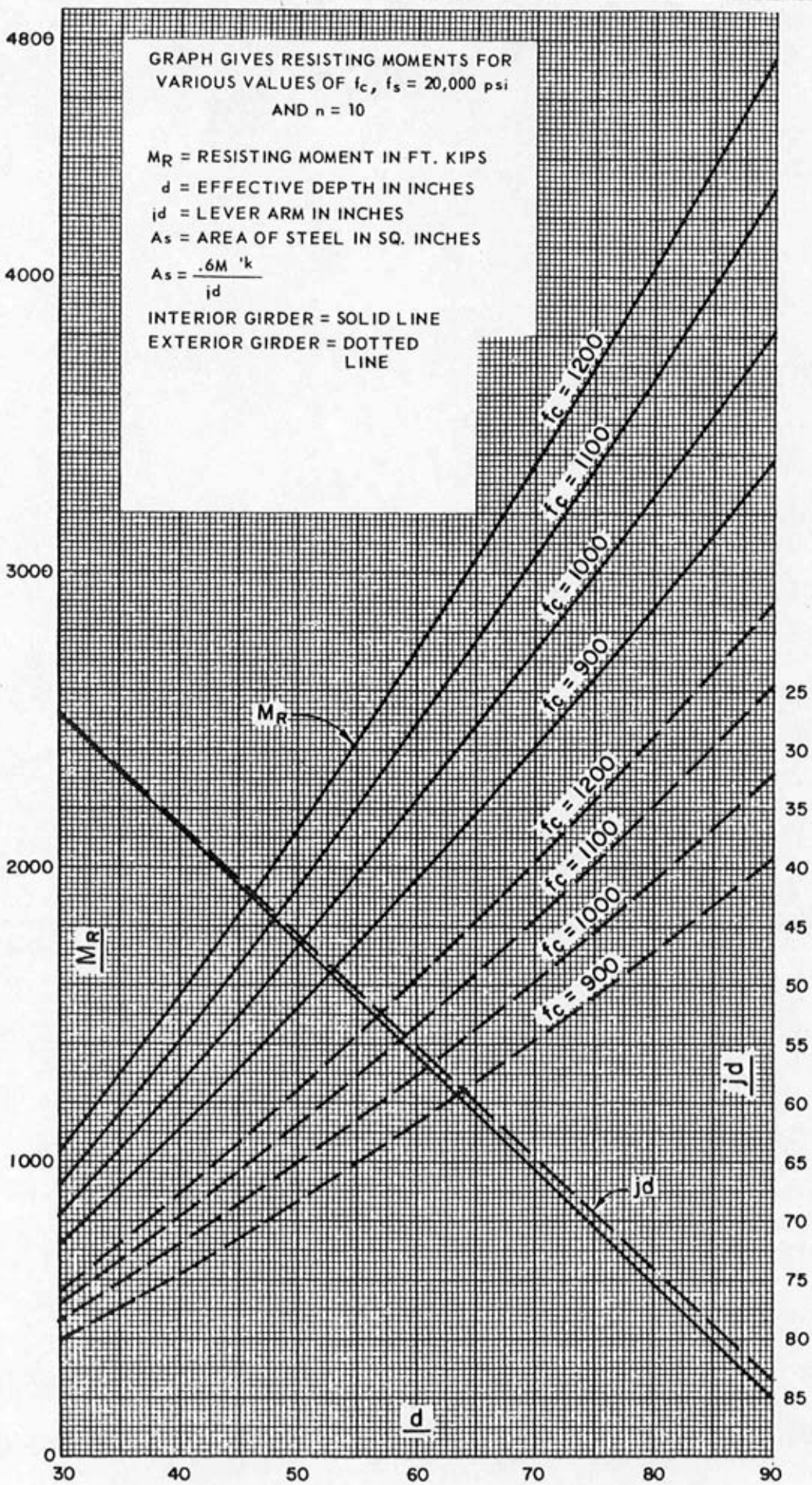

SLAB = 6¼"

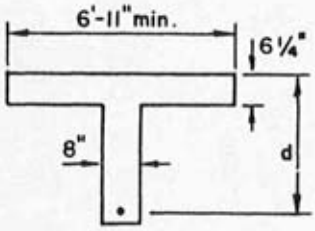

INTERIOR GIRDER

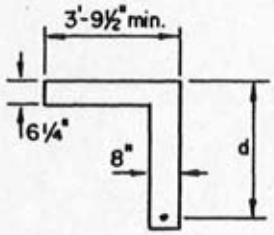

EXTERIOR GIRDER

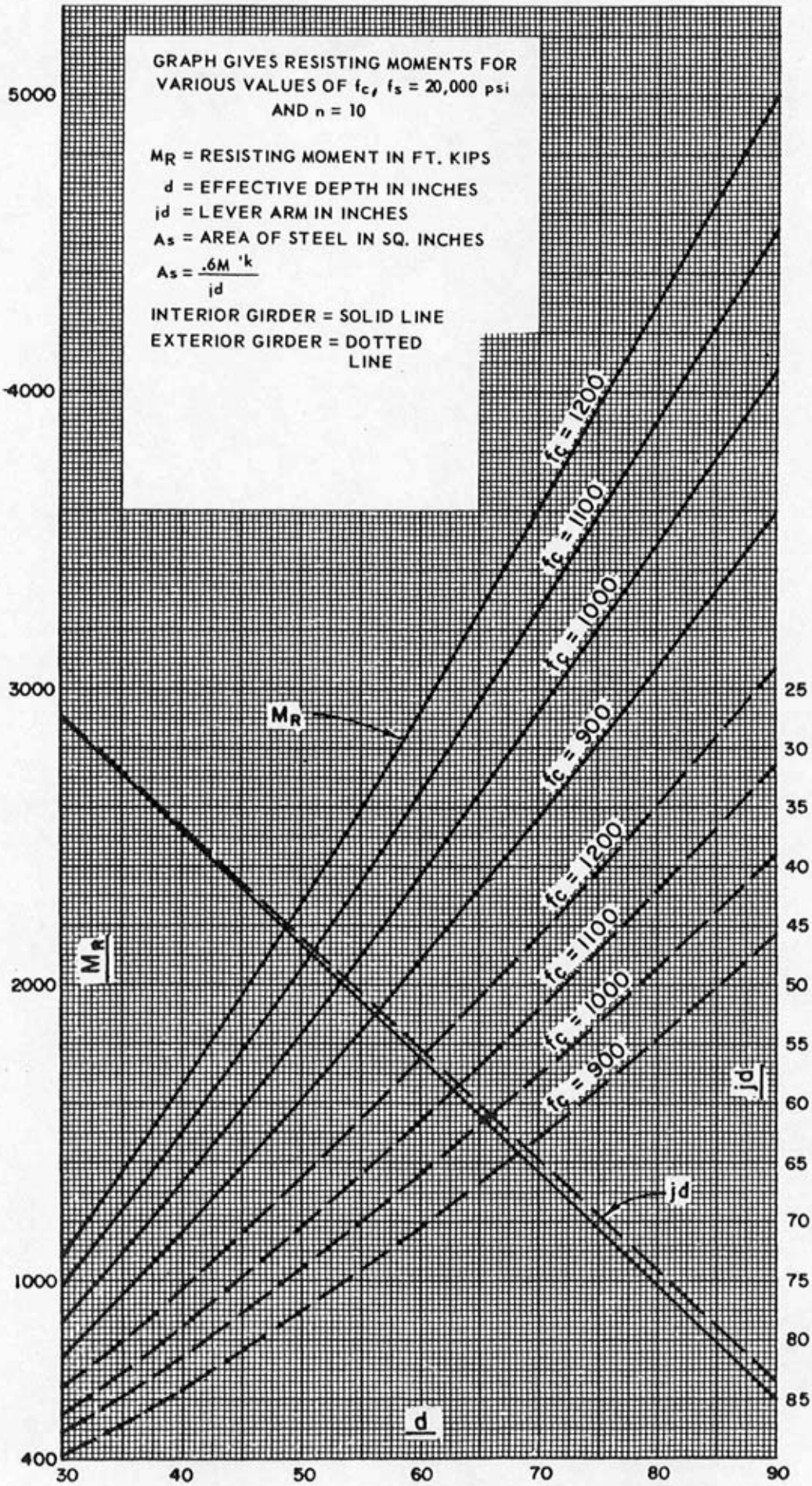

SLAB = 6 1/2"

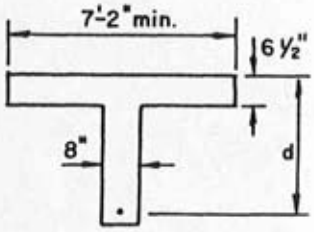

INTERIOR GIRDER

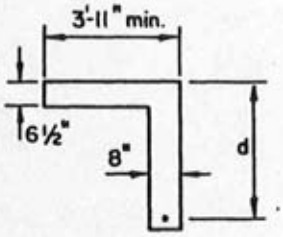

EXTERIOR GIRDER

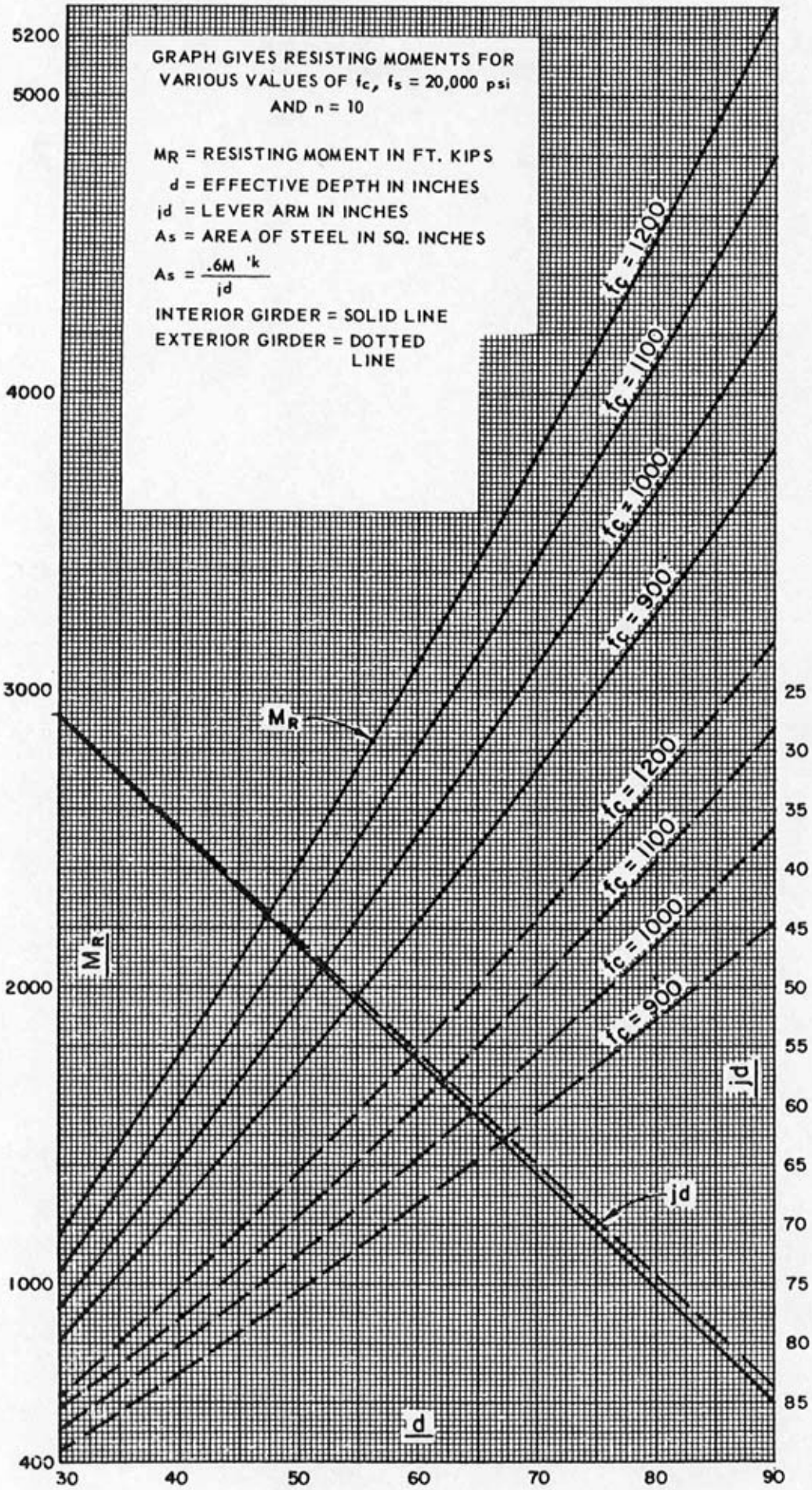

SLAB = 6¾"

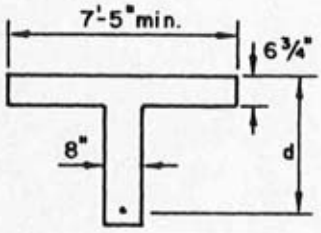

INTERIOR GIRDER

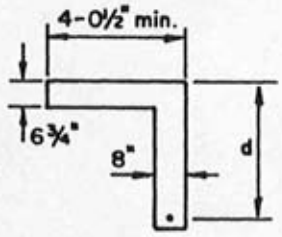

EXTERIOR GIRDER

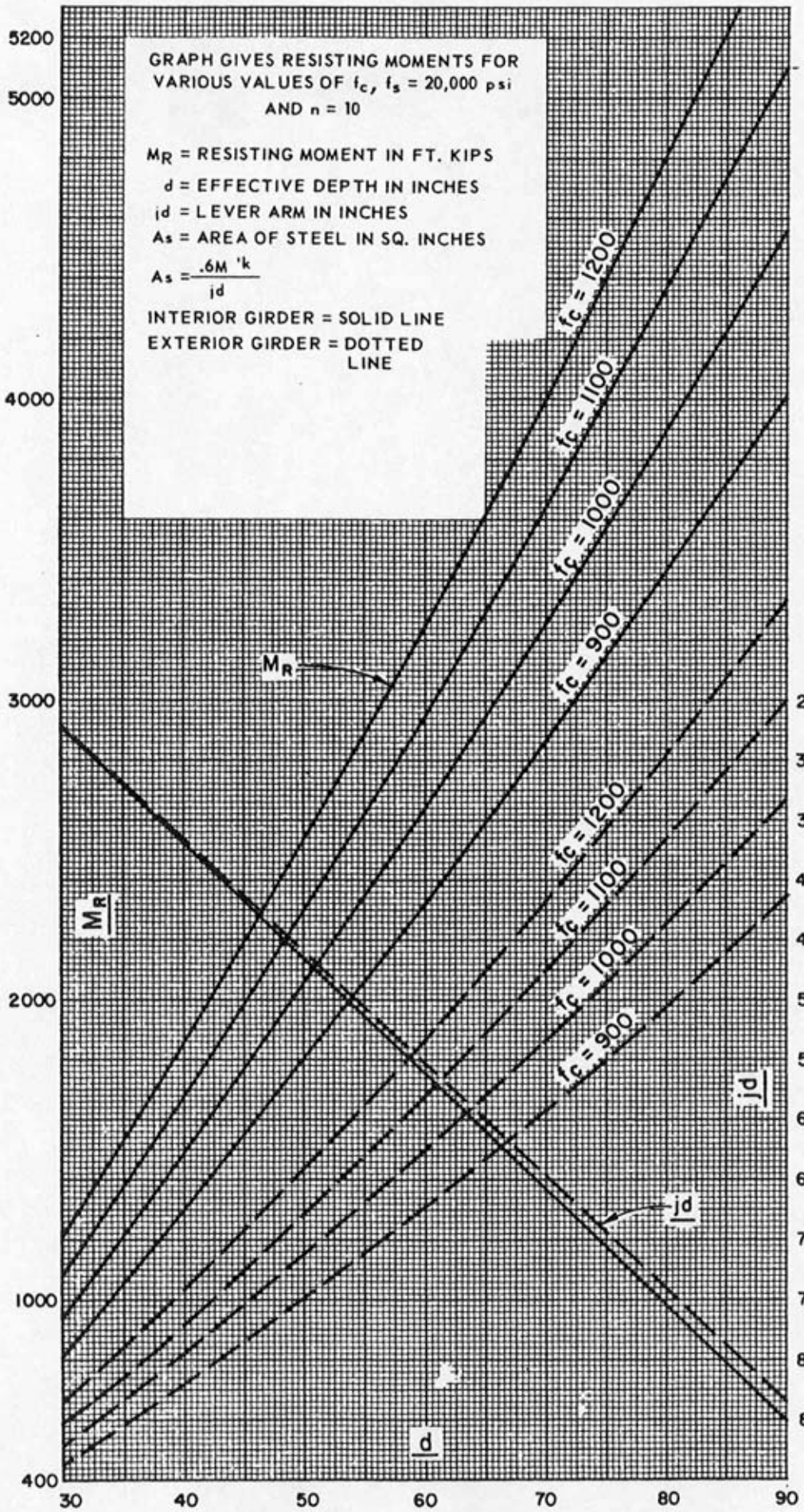

SLAB = 7"

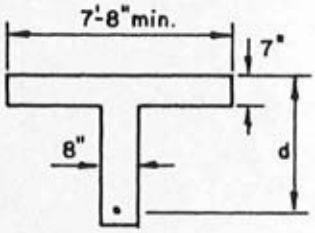

INTERIOR GIRDER

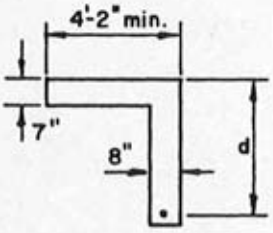

EXTERIOR GIRDER

Column Design Charts

Notations:

d = least lateral dimension of column.
f'_c = compressive stength of concrete.
f_y = yield stress of reinforcement.
M = design bending moment at section due to ultimate loads.
P = design axial load at section due to ultimate loads.

Design Specifications:

See Bridge Design Manual Volume 1, Article 6–11

Stresses:

f'_c = 3,250 psi
f_y = 60,000 psi

Max Column Length = 10d

Use of Charts:

Enter the charts with an ultimate axial design load and an ultimate design bending moment and determine the reinforcement required.

Example 1: Given - 5'–6" octagonal column
P = 7,500 kips
M = 5,500 ft-kips
by interpolation Use 24-#18

Example 2: Given - 6' round column
P = 3,250 kips
M = 12,250 ft-kips
by interpolation Use 24-#18

Spiral Spacing:

The spacing of spirals depends on the strength of concrete and clearance to the spiral. For f'_c of 3250 psi and 2" clear to the spiral, #4 at 3–1/2" is sufficient for all column diameters. If a stronger concrete or a greater clearance is needed (as for corrosion protection in high cloride or marine environment), the spiral must be calculated from the following formula:

$$P' = 0.45 \quad \frac{Ag}{Ac} - 1 \quad \frac{f'_c}{f'_{sp}}$$

f'_{sp} = 60,000 psi
Ag = gross column area
Ac = area of column core

P' = ratio of volume of spiral reinforcement to the volume of the concrete core (out to out of spirals).

Maximum clear spacing for spirals is 3".

COLUMN BAR ARRANGEMENT
SINGLE RING OF MAIN REINFORCEMENT

Minimum Bar Spacing	Maximum Number of Bars (c-c bars)				
	Column Diameter				
	4'	5'-6"	6'	7'	8'
#10 Bars 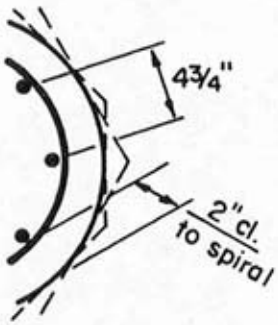	27	39	43	51	59
#11 Bars 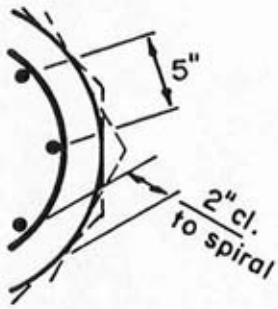	25	37	41	48	56
#14 Bars 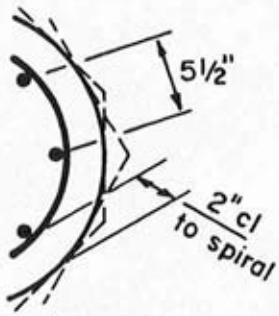	23	33	37	44	51
#18 Bars 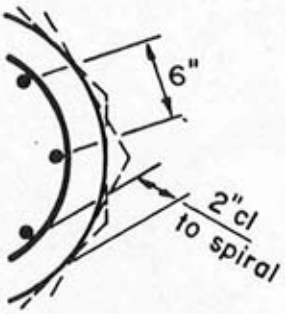	21	30	34	40	46

COLUMN BAR ARRANGEMENT
TWO RINGS OF MAIN REINFORCEMENT

Minimum Bar Spacing	Maximum Number of Bars (c-c bars)				
	Column Diameter				
	4'	5'-6"	6'	7'	8'
#18 Bars 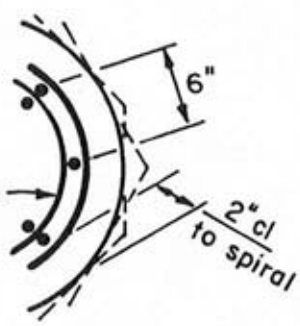		40	48	62	84

The number of bars in the inner ring shall be a convenient fraction of the number of bars in the outer ring, so the reinforcement can be bundled and symetrically placed.

Whenever the footing depth is sufficient to provide adequate bond length, straight bars shall be used for the inner ring of reinforcement. When footing depth is not sufficient to provide adequate bond length, hooked bars shall be used and detailed on the plans as shown below:

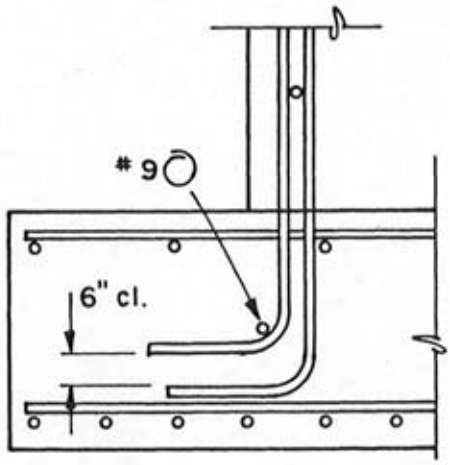

d = 4' COLUMN

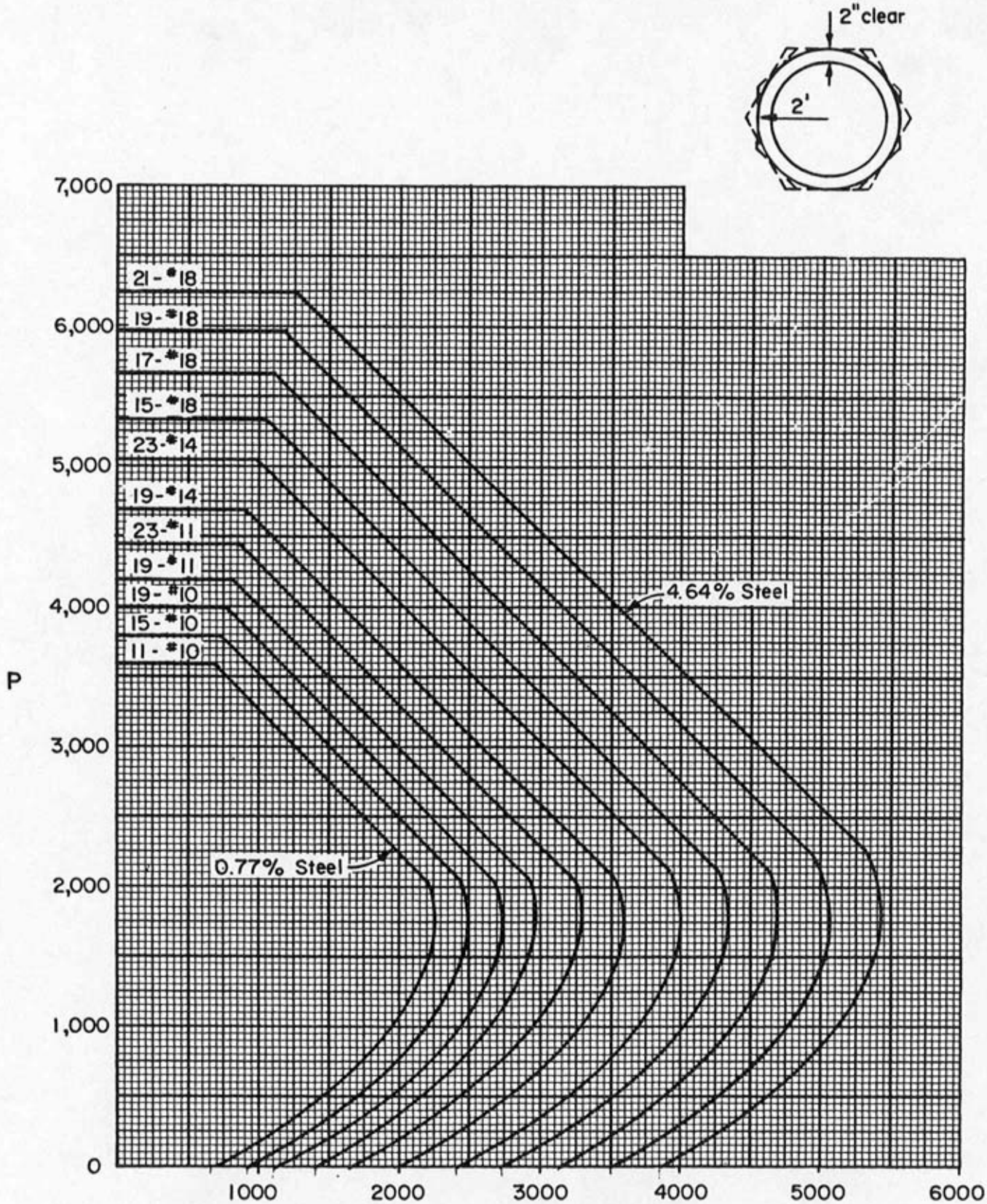

Scale:
Horiz. 1" = 1000 k-ft
Vert. 1" = 1000 k

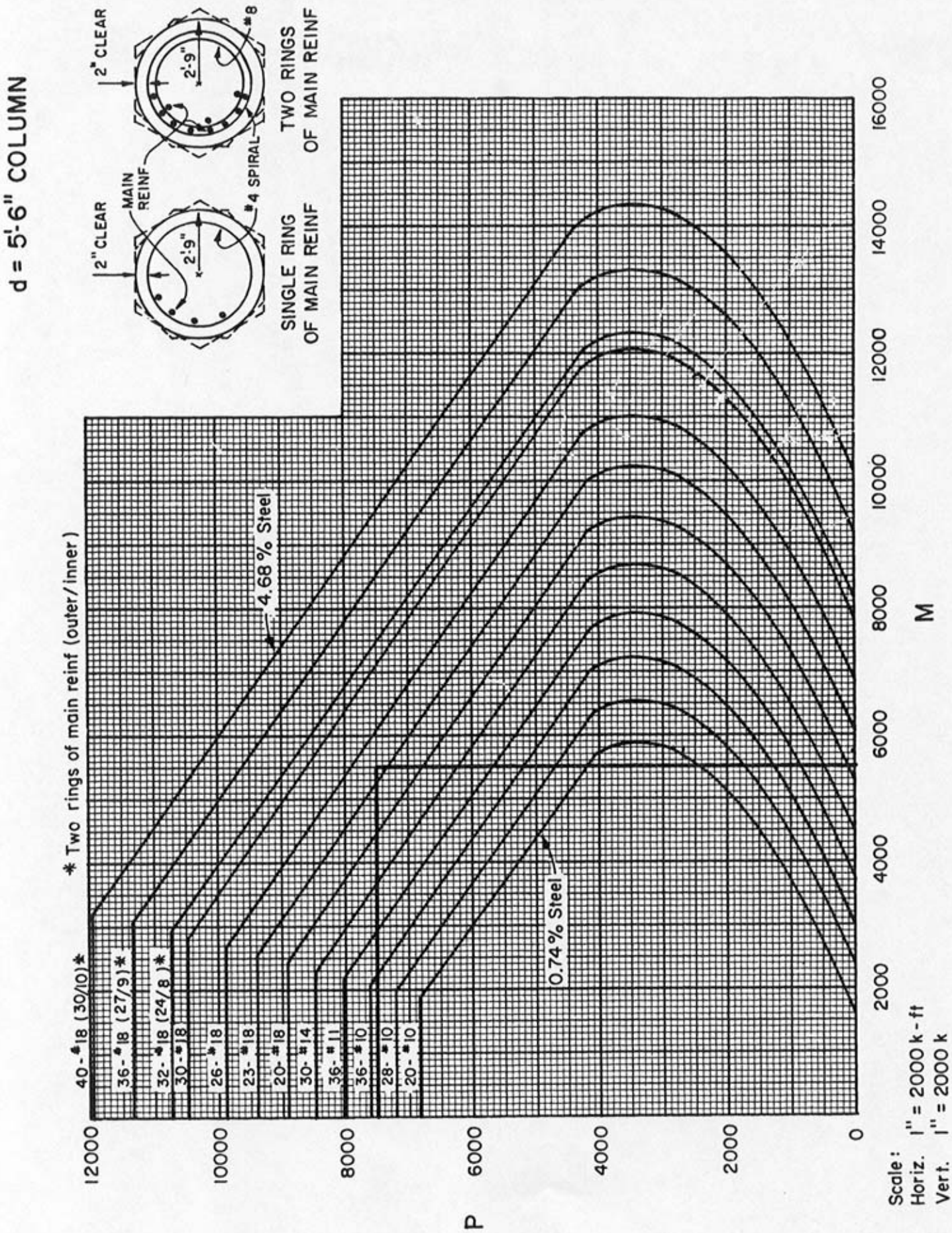
d = 5'-6" COLUMN
2" CLEAR
MAIN REINF
#4 SPIRAL
2'-9"
SINGLE RING OF MAIN REINF
2" CLEAR
#8
2'-9"
TWO RINGS OF MAIN REINF
* Two rings of main reinf (outer/inner)
40-#18 (30/10)*
36-#18 (27/9)*
32-#18 (24/8)*
30-#18
26-#18
23-#18
20-#18
30-#14
36-#11
36-#10
28-#10
20-#10
4.68% Steel
0.74% Steel
P
M
12000
10000
8000
6000
4000
2000
0
2000
4000
6000
8000
10000
12000
14000
16000
Scale:
Horiz. 1" = 2000 k-ft
Vert. 1" = 2000 k

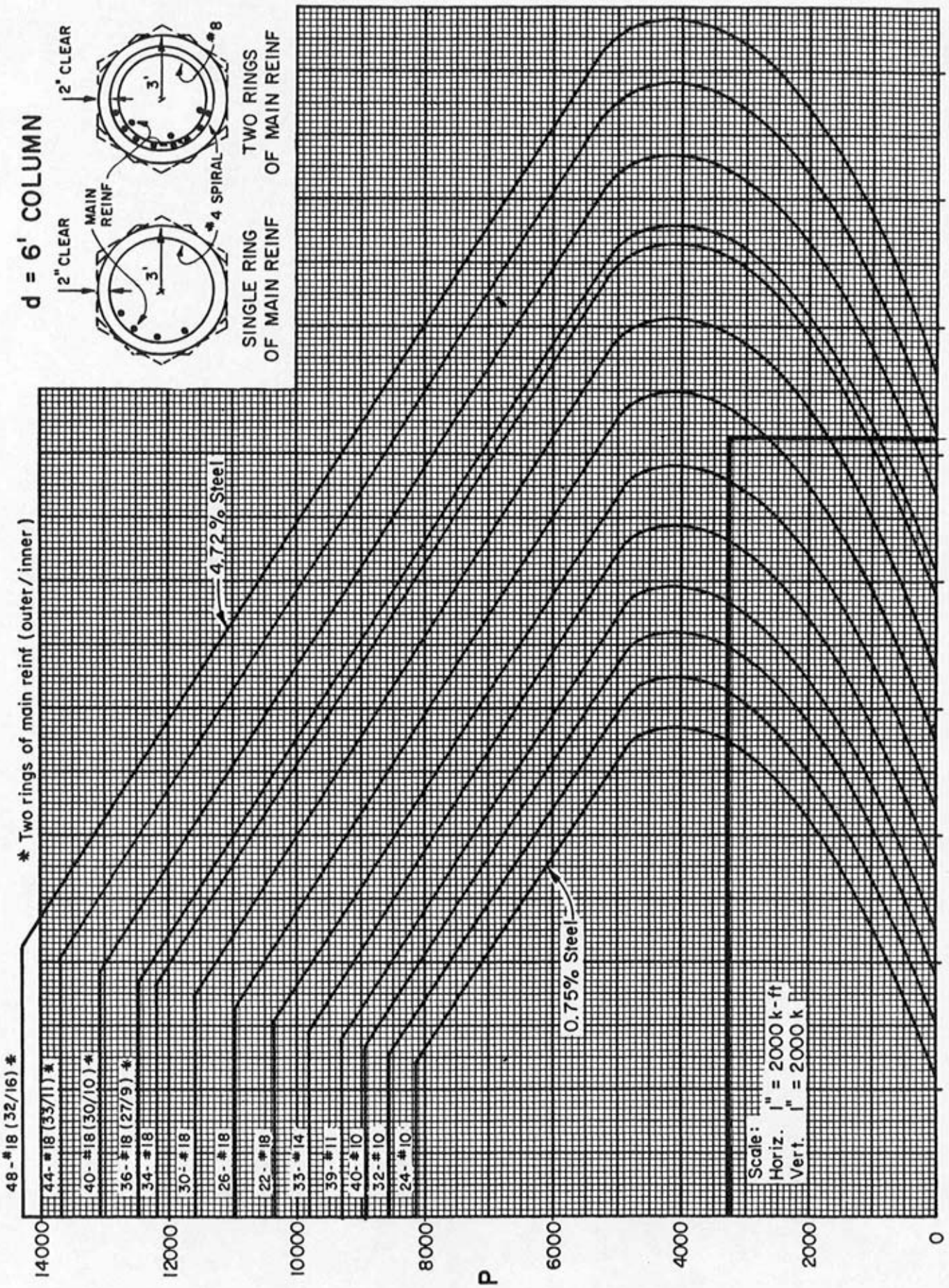
d = 6' COLUMN
2" CLEAR
MAIN REINF
3'
#4 SPIRAL
SINGLE RING OF MAIN REINF
2" CLEAR
3'
#8
TWO RINGS OF MAIN REINF
* Two rings of main reinf (outer/inner)
48-#18 (32/16) *
44-#18 (33/11) *
40-#18 (30/10) *
36-#18 (27/9) *
34-#18
30-#18
26-#18
22-#18
33-#14
39-#11
40-#10
32-#10
24-#10
4.72% Steel
0.75% Steel
Scale: 1" = 2000 k-ft
Horiz. 1" = 2000 k
Vert.
P
M
0
2000
4000
6000
8000
10000
12000
14000
16000
18000

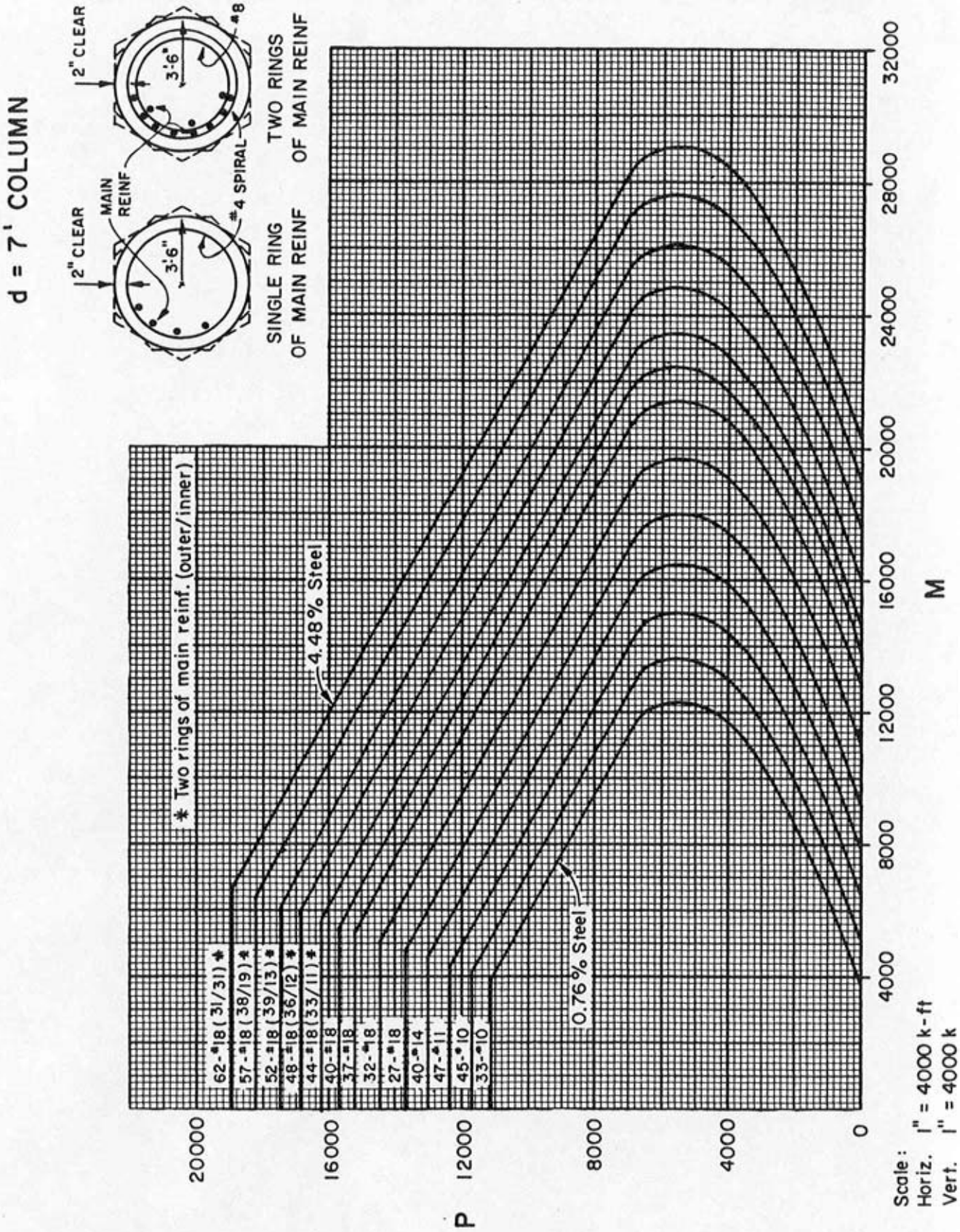
d = 7' COLUMN
2" CLEAR
MAIN REINF
3'-6"
#4 SPIRAL
SINGLE RING OF MAIN REINF
2" CLEAR
3'-6"
#8
TWO RINGS OF MAIN REINF
* Two rings of main reinf. (outer/inner)
62-#8 (31/31) *
57-#8 (38/19) *
52-#8 (39/13) *
48-#8 (36/12) *
44-#8 (33/11) *
40-#8
37-#8
32-#8
27-#8
40-#4
47-#11
45-#10
33-#10
4.48% Steel
0.76% Steel
P
20000
16000
12000
8000
4000
0
M
4000
8000
12000
16000
20000
24000
28000
32000
Scale: 1" = 4000 k-ft
Horiz. 1" = 4000 k
Vert.

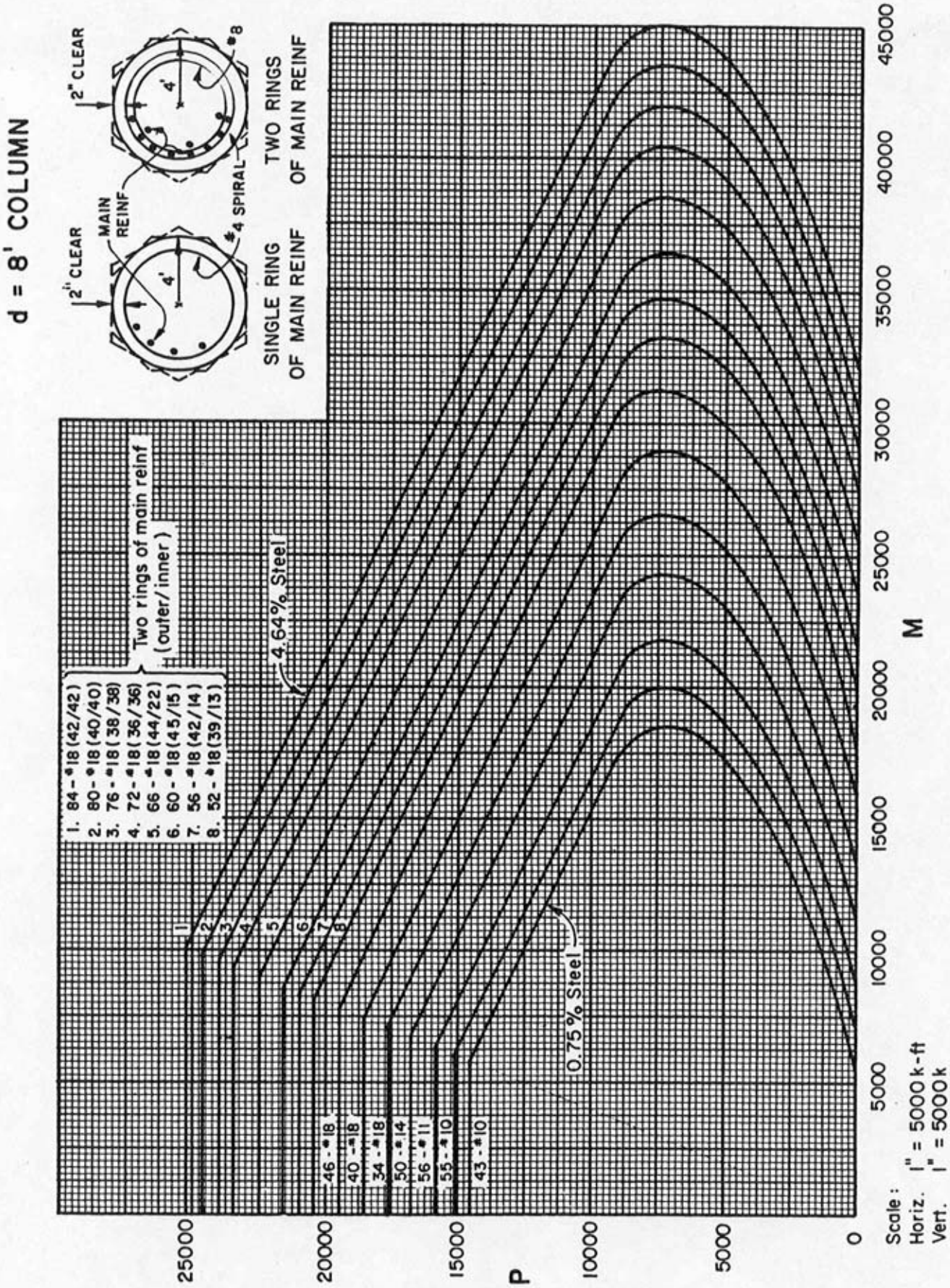
d = 8' COLUMN
2" CLEAR
MAIN REINF
#4 SPIRAL
#8
4'
SINGLE RING OF MAIN REINF
TWO RINGS OF MAIN REINF
1. 84 - #18 (42/42)
2. 80 - #18 (40/40)
3. 76 - #18 (38/38)
4. 72 - #18 (36/36)
5. 66 - #18 (44/22)
6. 60 - #18 (45/15)
7. 56 - #18 (42/14)
8. 52 - #18 (39/13)
Two rings of main reinf (outer/inner)
4.64% Steel
0.75% Steel
46 - #18
40 - #18
34 - #18
50 - #14
56 - #11
55 - #10
43 - #10
P
M
0
5000
10000
15000
20000
25000
30000
35000
40000
45000
Scale:
Horiz. 1" = 5000 k-ft
Vert. 1" = 5000 k

SHEAR MODIFICATION FOR SKEWED CONCRETE GIRDERS

General

In nonskewed bridges the shear load from a span is distributed uniformly into a support by assuming each girder carries an equal portion. In a skewed bridge, the load tends to distribute to the supports in a direction normal to the support. This causes a greater portion of the load to be concentrated at the obtuse corners of the span and less at the acute corners.

The following graph was developed to provide adjustment factors for applied shears calculated without considering skew effects. The graph is based largely on the research report "Skew Parameter Studies, Volumes 1 & 2," dated October 1976, and authored by Ray Davis and Mark Wallace.

For curved bridges having large skews (> 45°), the designer should consider a more exact analysis such as STRUDL or CELL computer programs which also consider torsion.

Chart Use

Calculate the applied shear in accordance with *Bridge Design Specifications*. Assume the total shear to be distributed equally to all girders. Next, modify the applied shear at the support by multiplying it by the chart value. Let the design shear vary linearly to 1.0 × applied shear at the midspan for *all* spans regardless of end condition.

For bridges with less than 5 girders, the interior girders need not be modified.

Girder flare lengths, stem thickness and stirrup spacing in all girders should be adjusted to be logical and as repetitive as possible.

See the following examples of shear modification to a reinforced and prestressed box girder bridge.

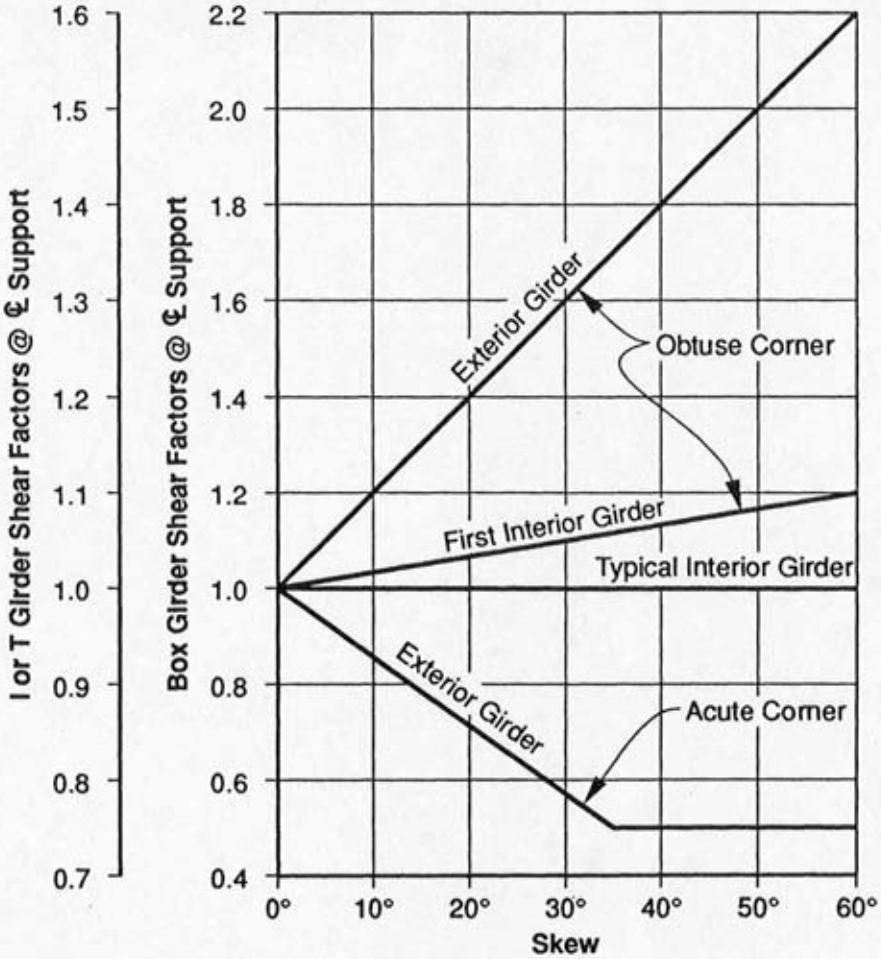

Chart No. 1

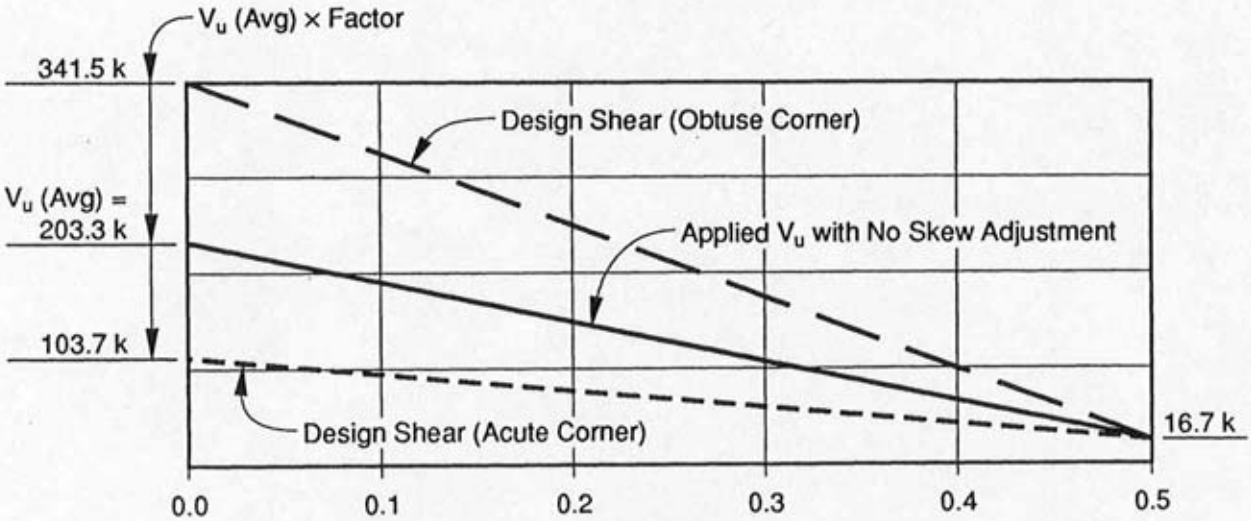

Note: Adjustment for interior girder not shown

34° Skew Adjustment Sketch for Example Problem No. 1

Shear Magnification Example No. 1

Reinforced Concrete Box Girder. Fully Continuous 78' Span.

$f'_c = 3250$ psi
Skew = 34°

d = 4' = 48"
6 girders

Face of cap @ 2.5' along girder from centerline bent.
V_u (D + L + I) = 1220 k @ centerline bent.
= 100 k @ centerline span.

V_u (avg.) = 1220/6 = 203.3 k/girder @ centerline bent.
= 100/6 = 16.7 k/girder @ centerline span.

Skew factors @ centerline bent from Chart No. 1:

Obtuse corner, exterior girder = 1.68
Obtuse corner, first interior girder = 1.11
Acute corner, exterior girder = 0.51

Calculate Design V_u (see 34° skew adjustment sketch)

Factor ×	V_u (avg) =	V_u (@ centerline bent)	V_u (@ centerline span)	V_u (@ d from face)
1.68	203.3	341.5	16.7	287.4
1.11	203.3	225.7	16.7	190.9
1.00	203.3	203.3	16.7	172.2 (typ.int. girder)
0.51	203.3	103.7	16.7	89.2

Calculate b_w, stirrups

V_u (@d)	V_u/dG	b_w (req.)	b_w (des.)	SF_c	SF_s	#5 Stirrup Spacing	
						Req.	Use
287.4	5.99	12.4	12*	1.16	4.83	@ 5	@ 5
190.9	3.98	8.2	8	0.78	3.20	@ 8	@ 8
172.2	3.59	7.4	8	0.78	2.81	@ 9	@ 8
89.2	1.86	3.8	8	0.78	1.08	@ 24	@ 24**

* Usually 10" minimum @ exterior girder. ** See maximum stirrup spacing.

Maximum Stirrup Spacing

24" or d / 2 (BDS 8.19.3) unless $V_u / dG > \phi \times 6 \times \sqrt{f'c} \times b_w$ (BDS 8.16.6.1 and 8.16.6.3.8)
$= 0.2907\, b_w$ for 3250 psi concrete
$0.2907\, b_w = 0.2907 \times 8 = 2.33 > 1.86$ ok
Maximum spacing = 48 / 2 = 24"

Check midspan spacing

$V_u/d = 16.7/48 = 0.35 < SF_c = 0.78$ ∴ Stirrups not required by analysis. Use #5 @ 24.
For #5 @ 24, $SF_s = 1.098 > 1.08$ required at acute corner.
Use #5 @ 24 from midspan to support @ acute corner.

Exterior Girder Flare Dimensions @ Obtuse Corner

V_u @ face of bent = 320.7 k
$b_w = V_u/(d \times 0.4846) = 320.7/(48 \times 0.4846) = 13.8''$ say 14"

Assume 16' long flare.
b_w @ d from face = 12.5" (for 16' flare) > 12.4" (required) ok

Use 14" × 16' flare, exterior girder, obtuse corner only.

References

Bridge Design Practice, Tables 17, 18 and 19 (pp. 2-244, 245, & 249), dated November 1981.

Shear Magnification Example No. 2

Prestressed Concrete Box Girder. Simple/Continuous 150' span.

$f'_c = 4000$ psi
Skew = 30°

Structure Depth = 6'
7 girders

Face of abutment @ 1.5' along girder from centerline abutment.

Skew factors @ centerline abutment from Chart No. 1:

Obtuse corner, exterior girder = 1.60
Obtuse corner, first interior girder = 1.10
Acute corner, exterior girder: No adjustment suggested

Design: (Exterior girder)

	Centerline Abutment	0.1	0.2	0.3	0.4	0.5
Skew Factor	1.60	1.48	1.36	1.24	1.12	1.00
Calculated V_u*	3632	2675	1904	1166	494	1212
Calculated V_c*	2780	2637	1313	659	527	811
A_v required**	1.82	0.87	0.77	0.47	minimum	0.27
b' required***	18.0	8.6	7.7	4.6	—	2.6

* From BDS output or other method.

$$** \; A_v = \left(in^2 / ft\right) = \frac{(\text{Skew Factor})\left(\frac{V_u}{\varnothing}\right) - V_c}{60(d)(\text{No. of girders})} = \frac{(\text{Skew Factor})(1.11)(V_u) - V_c}{48(D)(\text{No. of girders})}$$

where d = (0.8)(D) and Ø = 0.90

See Chart No. 3 for selecting size and spacing of stirrups.

$$*** \text{Min } b' = \frac{625A_v}{\sqrt{f'_c}}$$ (or from attached Chart 2)

where the expression for b' is derived from the following expressions:

$$V_s = \frac{A_v f_{sy} d}{s}$$ and maximum $V_s = 8\sqrt{f'_c}\, b'd$ (BDS Article 9.20.3.1)

Exterior Girder Flare Dimensions @ Obtuse Corner

b′ required at face of diaphragm = 18.0 – (1.5/15) (18.0 – 8.6) = 17.1". Use 18".

Assume 12' long flare.

b′ required at end of flare = 18.0 – (13.5/15) (18.0 – 8.6) = 9.5" < 12" OK.

Use 18" × 12' long flare.

Check Maximum Spacing (From Chart 2)

At diaphragm face:	For A_v = 1.82 and b′ = 18"	→	Reduce by ½ (½ × 24" maximum = 12")
At midspan:	For A_v = 0.27 and b′ = 12"	→	24" maximum okay

Notes

1) The above examples are supplied to make the designer aware of considerations, specifications and available design aids when designing for girder shear in skewed bridges. Normally a less involved process for actual designs would be acceptable because some of the data calculated or tabulated for the examples is known by inspection.

2) For prestressed structures, other design methods are available. One more detailed method is a computer program called "PSHEAR." See page 5-39 for PSHEAR instructions.

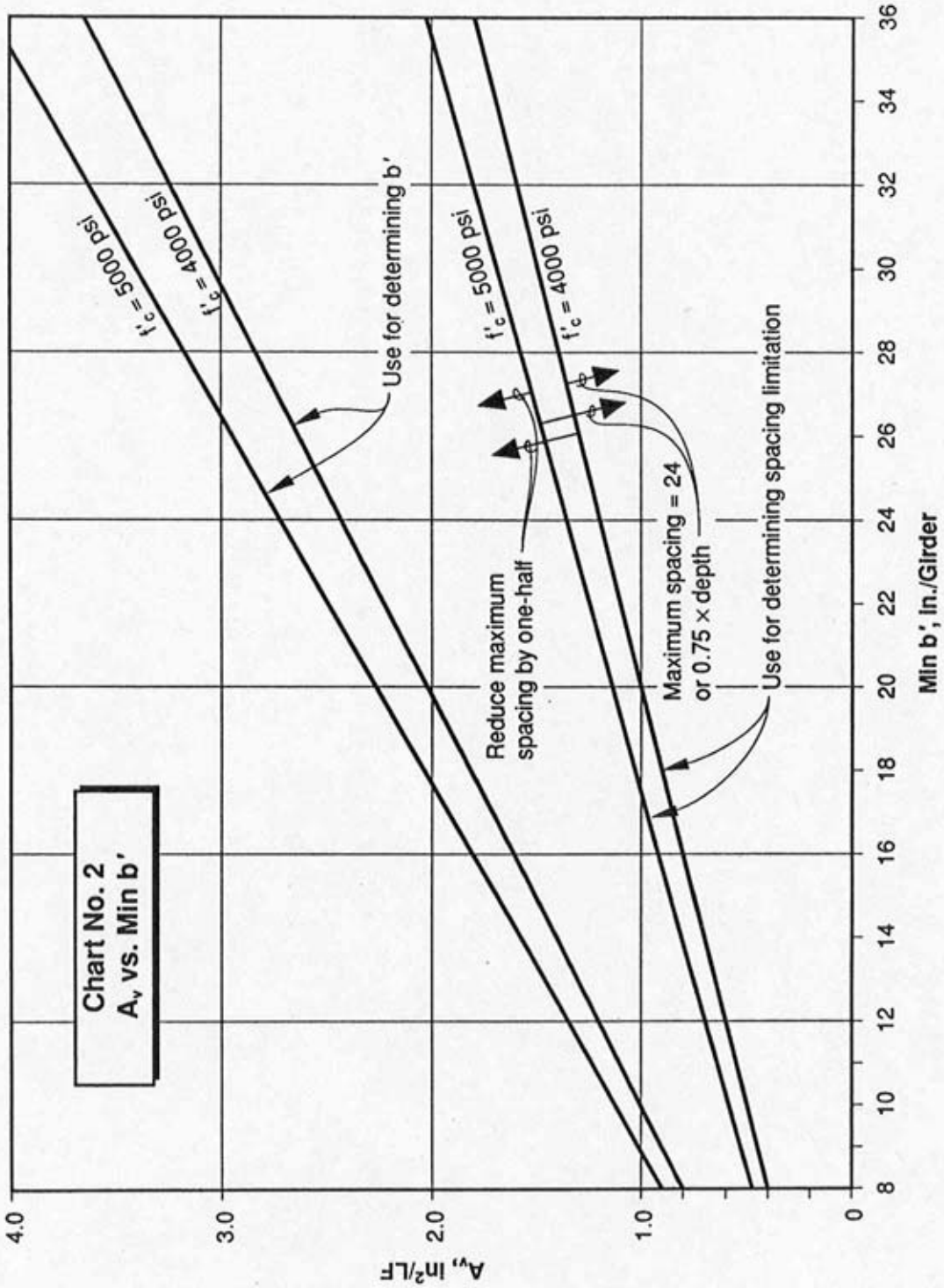
Chart No. 2
A_v vs. Min b'
f'_c = 5000 psi
f'_c = 4000 psi
Use for determining b'
f'_c = 5000 psi
f'_c = 4000 psi
Reduce maximum spacing by one-half
Maximum spacing = 24 or 0.75 × depth
Use for determining spacing limitation
A_v, in²/LF
4.0
3.0
2.0
1.0
0
8
10
12
14
16
18
20
22
24
26
28
30
32
34
36
Min b', in./Girder

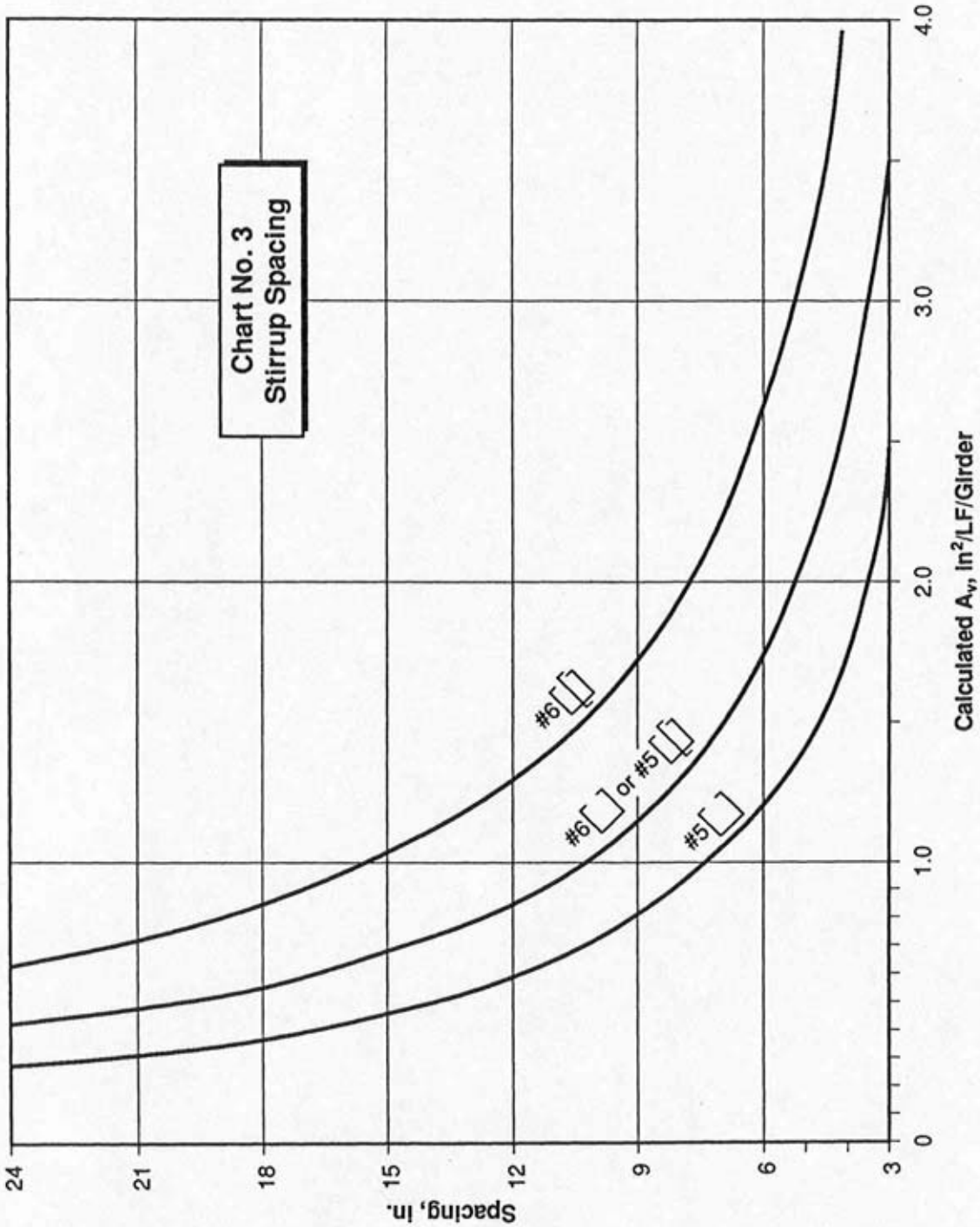
Chart No. 3
Stirrup Spacing
#6
#6 or #5
#5
Spacing, in.
24
21
18
15
12
9
6
3
0
1.0
2.0
3.0
4.0
Calculated A_v, in^2/LF/Girder

STEPS FOR ACCESSING AND RUNNING PSHEAR

The program can be found in the Bridge Computer Library.

1. Go through the general work account to the main bridge menu.

2. Type: Run, PSHEAR

3. Instruction and Definitions:

   a. Instructions and variable definitions can be listed if you are unfamiliar with the program by answering "yes" to the instructional subroutine. Strike PF3 to exit instructional subroutine.

   b. Answering "no" sends you directly to the main program after supplying an appropriate file name. Have your input file data, obtained from BDS output, ready to enter into the program. After entering the data onto the CRT screen blank form, type "file" to execute the data file and PSHEAR1 output will appear on screen.

4. Review results and record the desired output data.

5. PF3 to exit and to continue.

6. The program now asks if you would like to analyze another section.

   a. If you answer "yes", your original data files will be displayed. Modify the input data as needed for the next 10th pt. and file the data again as in Step 3b.

   b. Review results as in Step 4. Proceed to Step 5. Printouts of output can be obtained. If you answer "no", a print option screen will be displayed. After making your selection, the program then returns you to the main bridge menu. Return to Step 2 to continue or log off.

Inverted T-Caps

Inverted T-cap bents should be designed so that the falsework can be removed before the girders are placed. If, for unusual circumstances, it is necessary to leave the bent falsework in place until the superstructure is completed, suitable notes shall be placed on the plans requiring falsework to be designed to support the entire superstructure load and not to be removed until deck (or top of cap) concrete attains a specified strength.

In addition to the forces which are ordinarily used for design, end of girder and seat details are subjected to other forces caused by construction irregularities, skews, deflections, impact during construction, and changes in length caused by creep and shrinkage. These factors must be considered in the design process. Several instances of cracking in seats of inverted T-caps, used for supporting precast girders, have primarily been due to:

Girder rotation
Edge loading
Plastic prestress shortening (creep) between bents
Insufficient reinforcing steel
Poor arrangement of reinforcing steel

Memo to Designers 7-1 gives bearing pad recommendations which will help prevent spalling of the girder ends and seat edges. Sufficient prestressing steel must be placed in the girders, and sufficient reinforcement placed continuously across bent caps to satisfy tensile stresses caused by girder plastic prestress shortening between adjacent supports not having expansion joints.

Refer to the following pages for analysis and design instructions and examples.

Following are some illustrations which will help visualize the design procedure and complexity for inverted T-Caps.

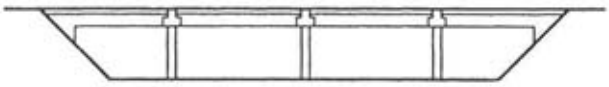

Bridge Elevation

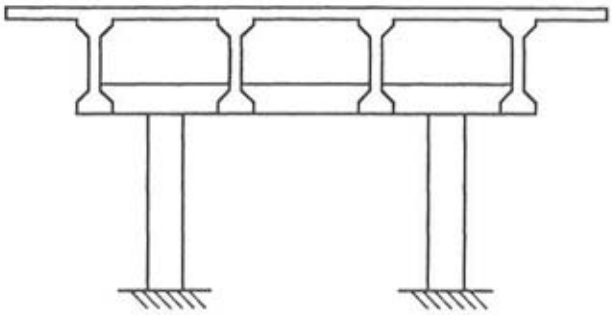

Typical Section

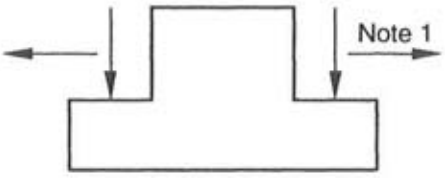

Loaded Section

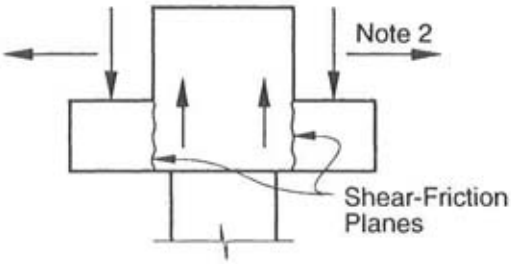

Corbel Design At Column

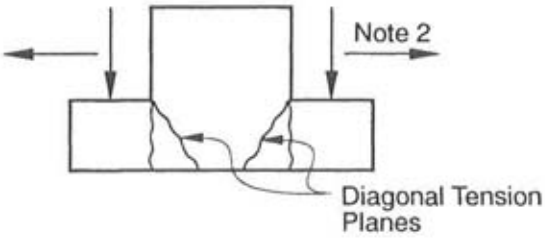

Corbel Design Between Columns

General Load Applications
(Sections through Cap)

Notes: 1. Horizontal plastic prestress shortening (creep) and thermal loads to be resisted by continuous reinforcement in deck.
2. Minimum tensile loads required by specifications.

Ledge Design Length

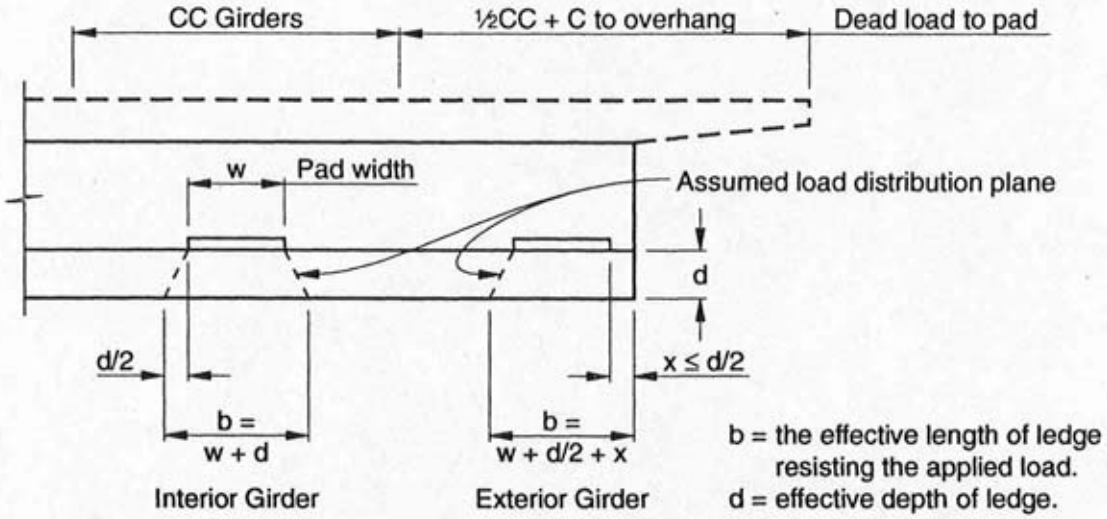

Dead Load Application
(Longitudinal View of Ledge)

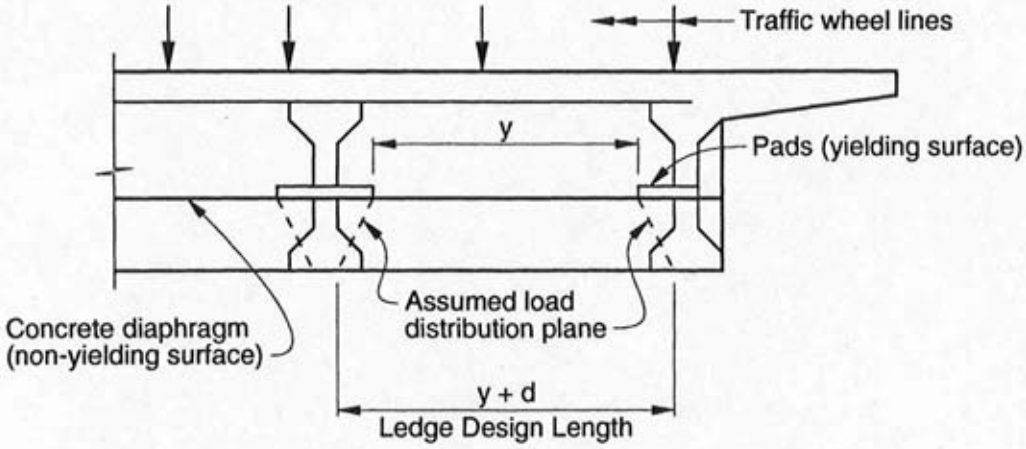

Live Load Application
(Longitudinal View of Ledge)

A. Design Strategy

Dead load of girders and deck is transmitted directly to portion of ledge under girders through the pad, assuming diaphragm concrete is placed with deck concrete.

Live load and added dead load are transmitted through the deck and the girders to the end diaphragms into ledge.

1. Corbel Design

a. Under girder : $D_{(Deck + Girder)} + (L + I + D_{Added})$ (Minor Portion)

b. Between Girders : $(L + I + D_{Added})$ (Major Portion)

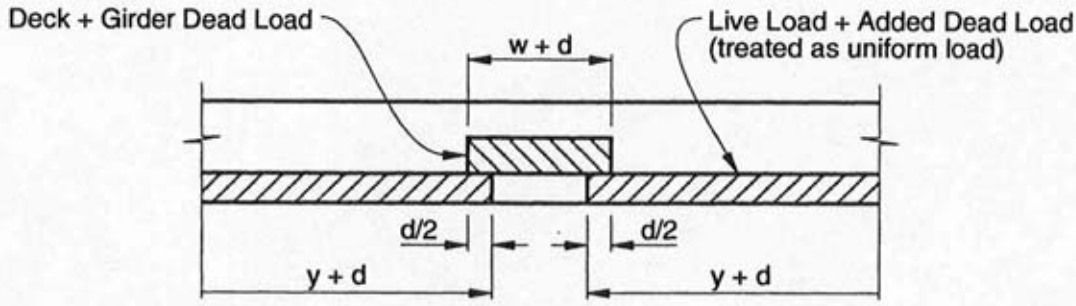

Typical Ledge Loading at Interior Girder

Note: Live load and added dead load distribution to ledge within width "w + d" should be assumed distributed uniformly across "w + d" for design purposes.

2. Bent Cap Design

Design should be similar to conventional bent caps (i.e., girders and wheel lines treated as concentrated loads). The inverted T-Section should be used for the shape of the design member, and all flexural and shear reinforcement should be fully contained within the section. One exception is that the top hooks of stirrups may extend into the deck slab.

It is recommended that other nominal or tensile reinforcement be extended from the horizontal and vertical ledge faces between fixed girder ends to enhance continuity.

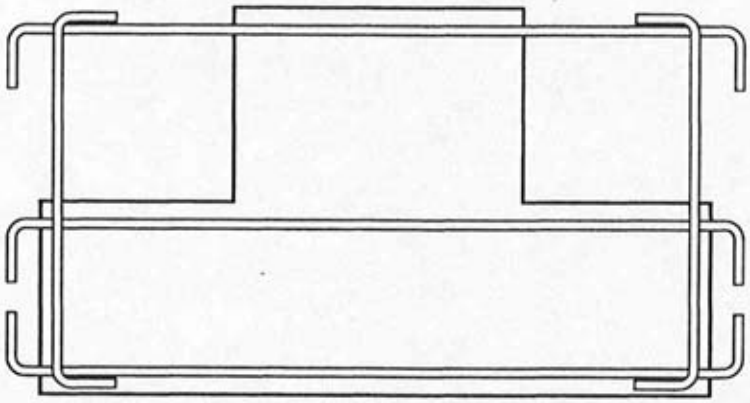

Typical where spans are continuous across bent cap.

Section of Cap between Girders

Designers must address flexural problems in the cross-sectional direction if the inverted-T becomes relatively wide (see illustrations below). Normally the cap is slightly wider than the column with only the ledges extending noticeably beyond the column face. The designer must be sure that the support is stable under all temporary construction stages.

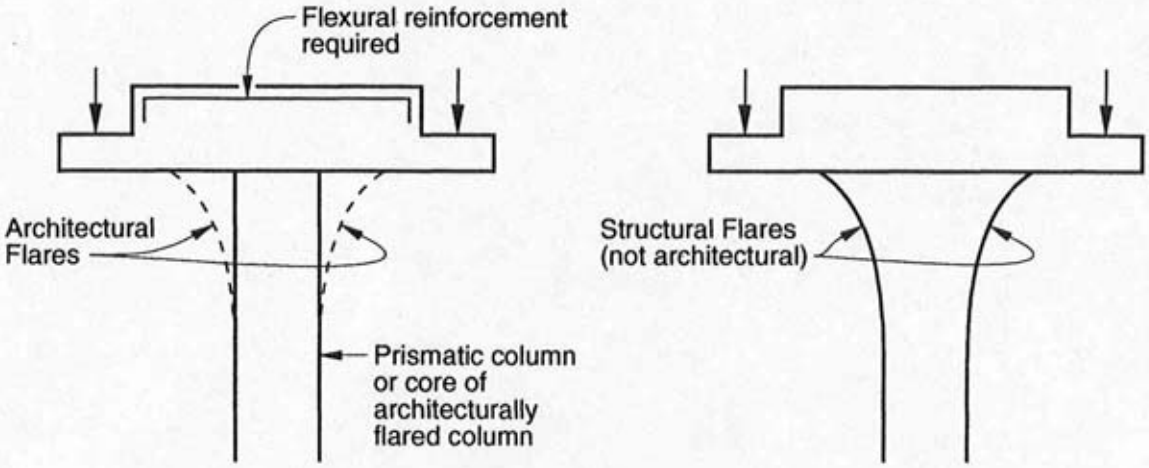

Examples of Non-Typical Inverted T-Caps

B. Design Commentary

Lower cap projections which support girders must meet the criteria for corbels. Corbel design limits and criteria are presented in *Bridge Design Specifications*, Article 8.16.6.8. The following criteria are to be considered:

1. The corbel criteria is suitable without modifications at columns which provide a compression reaction below the resisting shear-friction plane. An additional calculation for diagonal shear reinforcement is required at locations between columns if the column is inset more than normal from the shear-friction plane, or if a non-structural column flare, which could be lost in a seismic event, exists. Article 8.16.6.2.3, "Shear in Tension Members", should be used to satisfy diagonal shear.

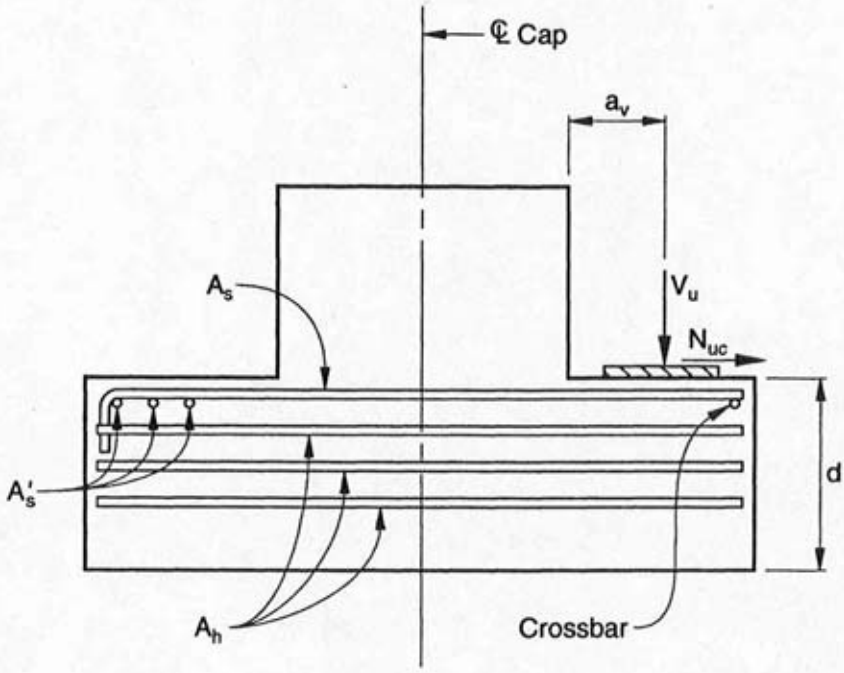

Nomenclature Sketch

2. Use vertical and horizontal loads of:

   $V_u = \quad 1.30\,[DL + \frac{5}{3}(LL + I)_{HS}]$ *or*

   $1.30\,[DL + (LL + I)_P]$ — *Avoid widely spaced girders*

   N_{uc} = shear force as per *Memo to Designers* 7-1 for expansion ends. In no case shall N_{uc} be less than 0.2 V_u (ACI 11.9.4) at both expansion and fixed ends.

3. Check for the effect of the appropriate loads acting with the girder on the area below the girder. Determine the width of seat "b". For interior girders, "b" equals the width of the bearing pad plus the depth "d" of the corbel. For exterior girders, "b" equals the bearing pad plus one-half the depth "d" of the corbel plus edge distance to end of cap, not to exceed d/2. The seat reinforcement must be placed within the width of the seat, "b".

4. Compute A_s for both exterior and interior girders, and for ledge between girders. On either fixed ends or expansion ends which require additional pads between the girders, a load distribution scheme must be determined by the designer consistent with the construction sequence. The ledge must be reinforced accordingly.

5. Secondary tension bars shall be uniformly distributed in the upper two-thirds of the effective depth "d". They shall be placed parallel to the tension reinforcement "A_s" and have a cross-sectional area "A_h" not less than $0.5(A_s - A_n)$. See *Bridge Design Specifications*, Article 8.16.6.8.

6. Longitudinal corbel distribution bars, A'_s, shall be centered under all exterior bearing pads. Minimum area should be $A_s/2$. Uniformly space bars and extend them "d" beyond the seat width "b".

7. Keep pad a minimum of 3 inches from the edge of corbel to prevent high edge loadings.

8. Reinforcing steel at the edges of bearing seats may need specially detailed hooks to accommodate intersecting bars because of tight clearances.

9. A_s bar size should be chosen to allow required extension and development in the confined area. Crossbars welded to the ends of straight tension reinforcement (A_s) is an alternative when the radius of the hook bend is too large relative to ledger size. Size of crossbars should be that of the tension reinforcement. The following table shows allowable lengths for minimum "X" (see illustrations) based on hooked top bars without enclosure and $f'_c = 3{,}250$ psi.

Bar Size	Minimum "X"
#4	1'-3"
#5	1'-5"
#6	1'-9"
#7	2'-6"

Note: It is not reasonable to use bars larger than #7 because the ledge extension would become excessively large. Closer girder spacing, deeper ledge section, or higher strength concrete are three methods to reduce the bar size.

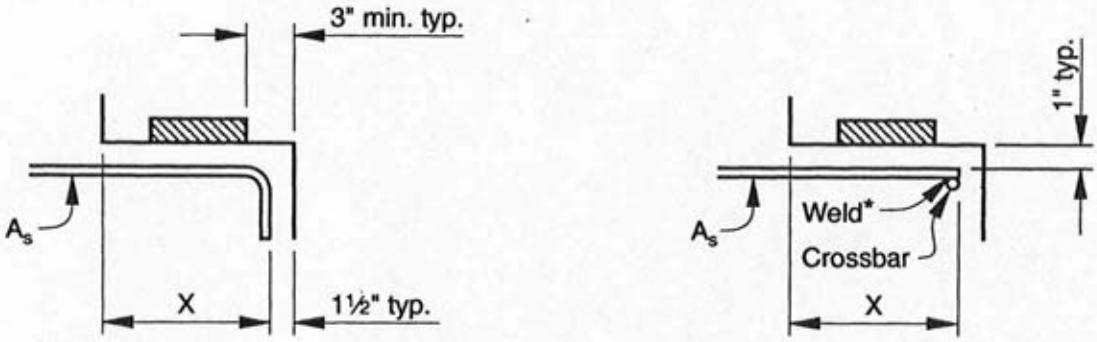

*In accordance with Figure 11.9.6 in ACI 318-83 Commentary

Hook/Crossbar Illustrations

10. Check diagonal tension reinforcement requirements for loading on the beam ledge. Use *Bridge Design Specifications*, Articles 8.16.6.2.3 (Shear in Tension Members) and 8.16.6.3 (Shear Strength Provided by Shear Reinforcement).

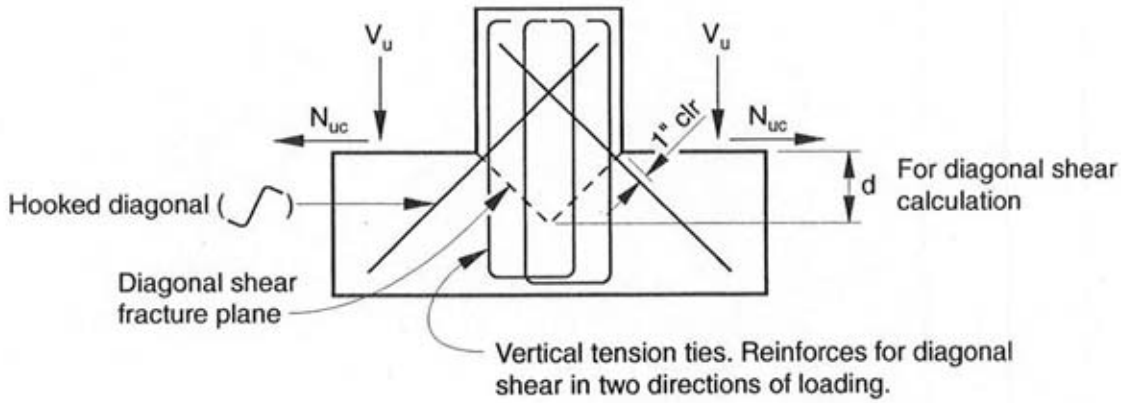

Any combination of vertical and diagonal bars may be used to satisfy the condition. Diagonal bar areas must be corrected for the angle of the bar to an effective area.

These shear bars are not in addition to the cap shear stirrups from a bent analysis. The corbel loads used to satisfy the diagonal shear are the same loads used to analyze the bent. The analysis requiring the greatest area of reinforcement per unit length of bent cap should be used.

C. Details

Sufficient plan details must be provided to show all reinforcement patterns and for all stages of construction. The details must clearly identify corbel and bent cap reinforcement at columns and between columns, for loads at pads and for loads in between pads. Care must be taken to assure that the corbel steel can be placed amongst the column bars and spiral. Bridge skews complicate the layering and interweaving of bars. Special attention by the designer is required to avoid conflicts.

Sections need to be shown for constructing the inverted T, and also for a final condition with girders in place and diaphragm concrete cast around the girder ends.

D. Design Example

Following is a design example using the foregoing criteria. The example should be considered a guide, and not a standard solution for all inverted T-Caps. Major widenings should be designed with a T-Cap independent from the existing cap using the foregoing criteria. Strip widenings requiring an existing cap extension should use existing reinforcement details, but improved to meet the foregoing design considerations

The latest OSD policies on bent cap joint shear are not considered in this example. The designer is responsible for performing a joint shear analysis, and provide supplemental reinforcement, as required, to satisfy load demands from the analysis.

Inverted "T" Bent Cap Design Example

I. Design Considerations

A. Flange/Ledge Design

(1) – flange punching shear at girder bearings

(2) – primary tension reinforcement

(3) – secondary tension reinforcement

(4) – corbel distribution reinforcement

(5) – diagonal tension

B. Overall Bent Cap Design

The inverted "T" bent cap should be designed for the following conditions.

- Max moment and associated shear and torsion
- Max shear and associated moment and torsion
- Max torsion and associated shear and moment

These items will not be addressed in this example.

II. Design Procedure and Example Problem: Inverted 'T' Bent Cap – Ledge Design

Design procedure for the ledge of the inverted "T" Bent Cap is as follows.

The ledge will be designed at 3 locations along the bent cap:

(a) interior girder

(b) exterior girder

(c) between girders

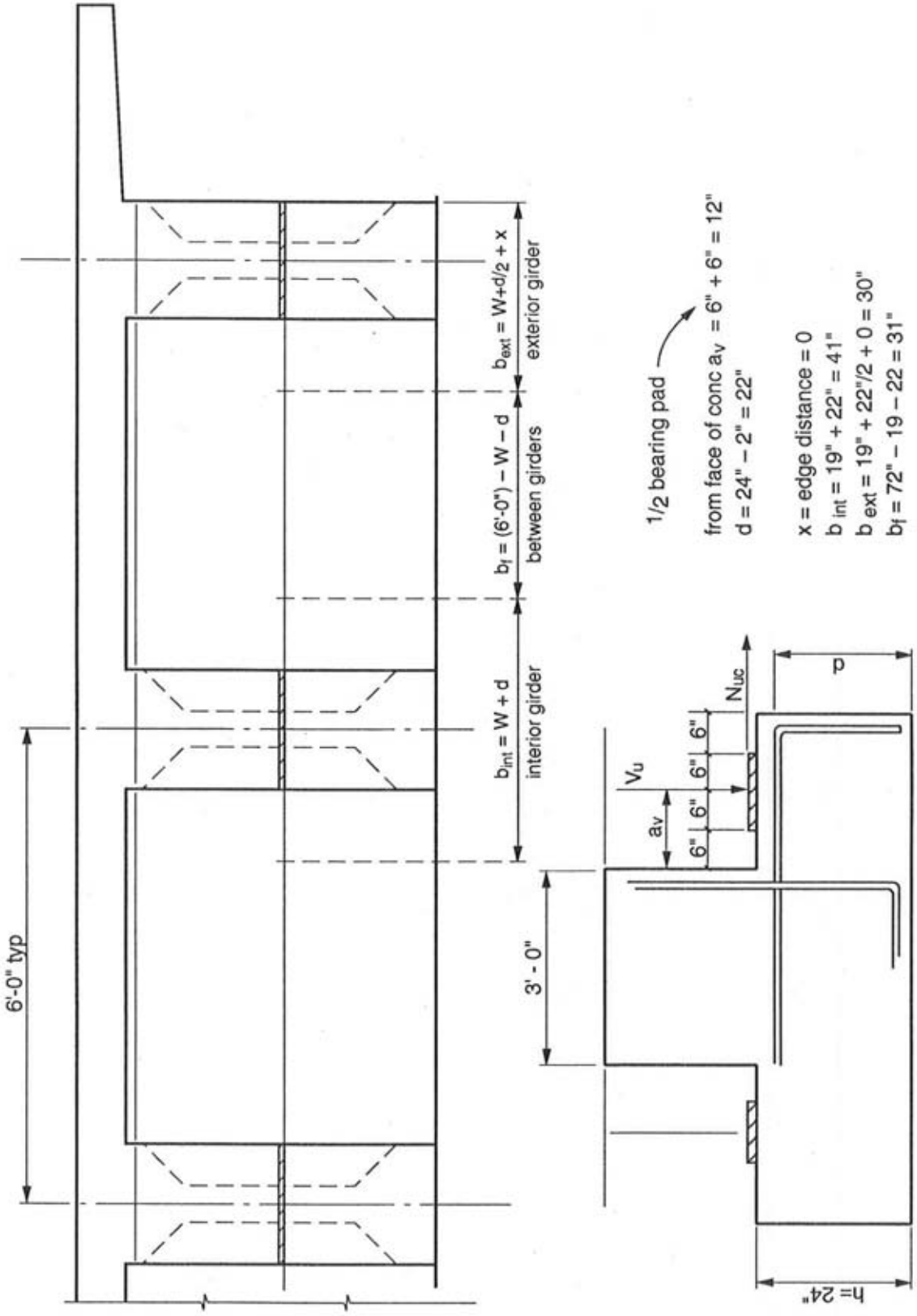
6'-0" typ
$b_{ext} = W + d/2 + x$
exterior girder
$b_f = (6'-0") - W - d$
between girders
$b_{int} = W + d$
interior girder
3' - 0"
1/2 bearing pad
from face of conc a_V = 6" + 6" = 12"
d = 24" − 2" = 22"
x = edge distance = 0
b_{int} = 19" + 22" = 41"
b_{ext} = 19" + 22"/2 + 0 = 30"
b_f = 72" − 19 − 22 = 31"
V_u
a_V
6"
6"
6"
N_{uc}
p
h= 24"

A. Given

Girder spacing = 6' - 0" o.c.

plain bearing pads $\frac{1}{2} \times 12 \times 19"$

h = 24" say d = 22"

Loads per girder – computed by tributary area method

DL per girder	130 k (includes weight of top deck)
Added DL per girder	30 k
$(LL + I)_{HS}$ per girder	80 k

"P" loads not considered in this example.

B. Design Loads

1. Vertical Shear, V_u

(W_u) Add DL + LL = 1.3 [30 k + $^5/_3$(80 k)]/6 feet

= 35.4 $^k/_1$

Interior Girder

Design for DL + Add DL + LL

$V_u = 1.3\ (130\ k) + (35.4\ ^k/_1)(^{41\ in}/_{12\ in/ft}) = 290\ k$

Exterior Girder

Design for DL + Add DL + LL

$V_u = 1.3\ (130\ k) = (35.4\ ^k/_1)(^{30\ in}/_{12in/ft}) = 258\ k$

Between Girders

Design for Add DL + LL

$V_u = (35.4\ k/1)(^{31\ in}/_{12\ in/ft}) = 92\ k$

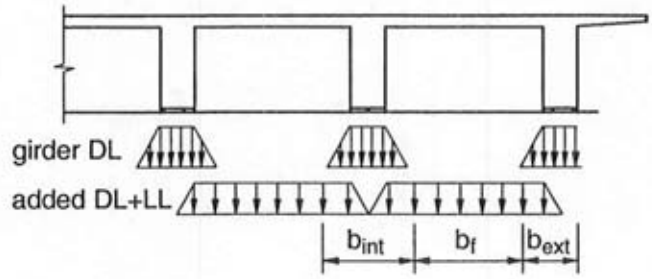

2. Horizontal Shear, N_{uc}

$$N_{uc} \geq \begin{cases} \text{horizontal pad shear } \textit{(Memos to Designers 7.1)} \\ 0.2\ V_u \text{ (BDS Art. 8.16.6.8.3)} \end{cases}$$

pad shear $F_s = \frac{G(A)\Delta_s}{t}$ $\quad \Delta s = 0.5 \quad$ $Fs = \frac{(170psi)(12")(19")(0.5")}{0.5"} = 39\text{ k}$

Interior Girder

$$N_{uc} \geq \begin{cases} \text{pad shear} = 39\text{ k} \\ 0.2\ V_u = 0.2\ (290) = 58\text{ k} - \text{controls} \end{cases}$$

Exterior Girder

$$N_{uc} \geq \begin{cases} \text{pad shear} = 39\text{ k} \\ 0.2\ V_u = 0.2\ (258) = 52\text{ k - controls} \end{cases}$$

Between Girder

$$N_{uc} \geq \begin{cases} \text{pad shear} = 0 \\ 0.2\ V_u = 0.2\ (92) = 18\text{ k} \end{cases}$$

3. Summary

$(V_u)_{int.}$ girder = 290 k $\quad (N_{uc})_{int} = 58$ k

$(V_u)_{ext.}$ girder = 258 k $\quad (N_{uc})_{ext} = 52$ k

$(V_u)_{btwn.}$ girder = 92 k $\quad (N_{uc})_{btwn} = 18$ k

C. Flange Dimension Check

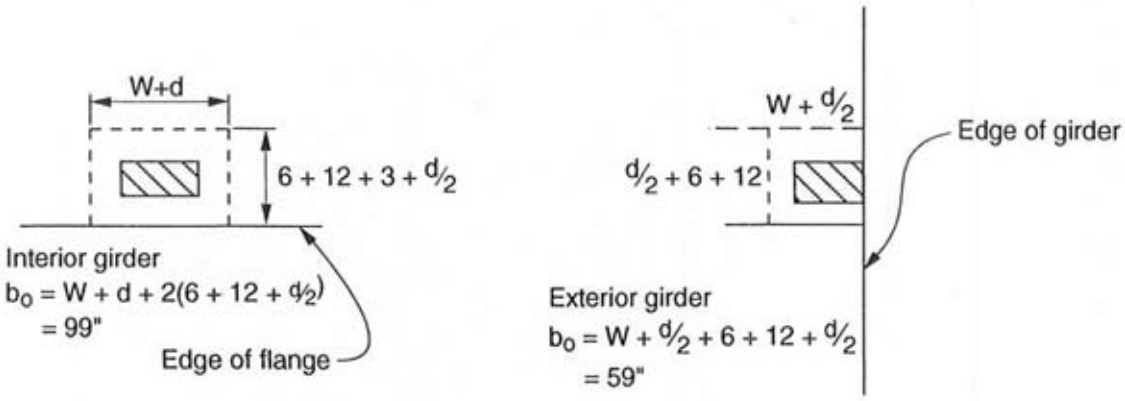

1. Check Punching Shear

$V_u < 0.85\ 4\sqrt{f'_c}\ b_o d$

Exterior Girder

$(V_u)_{ext} < (0.85)\ 4\sqrt{3250}\ (59)\ (22) = 251\ k$

$V_u = 258\ k > 251\ k \rightarrow NG$

Seat inadequate for punching shear. Try increasing depth of flange.

Try h = 30" d = 28"

$(V_u)_{ext} \leq 0.85\ (4)\ \sqrt{3250}\ (59)(28) = 220\ k$

$(V_u)_{ext} = 258\ k \rightarrow$ okay

$(V_u)_{int} \leq 0.85\ (4)\ \sqrt{3250}\ (99)(28) = 537\ k$

$(V_u)_{int} = 290k \rightarrow$ okay

∴ Use h = 30 inches

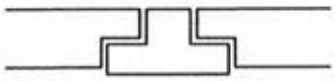

2. $^{av}/_{d} = {}^{12}/_{28} = 0.43 < 1.0$ (BDS Art. 8.16.6.8.1)

∴ Corbel design okay

D. Compute A_s – Primary Tension Reinforcement

(BDS Art. 8.16.6.8.3)

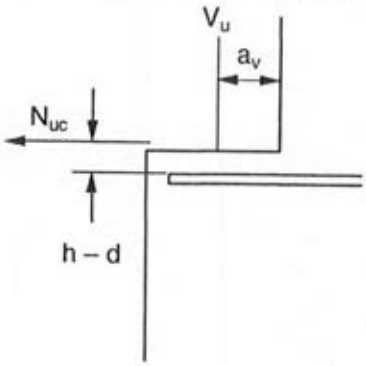

A_s to resist simultaneously $\begin{cases} \text{shear } V_u \\ \text{moment } V_u a_v + N_{uc}\,(h-d) \\ \text{tensile force } N_{uc} \end{cases}$

1. A_{vf} – Shear Friction Reinforcement

Interior Girder

$$V_n = \frac{V_u}{\phi} = \frac{290}{0.85} = 341 \text{ k}$$

$$V_n \le 0.2 f'_c A_{cv} = 0.2\,(3.25)(41 \text{ inches})(28) = 746 \text{ k} \rightarrow \text{okay}$$

$$\le 800\, A_{cv} = 0.800\,(41)\,(28) = 918 \text{ k} \rightarrow \text{okay}$$

$$A_{vf} = \frac{V_n}{f_y}\mu = \frac{341}{60(1.4)} = 4.06 \text{ sq. in.}$$

$\mu = 1.4$ for concrete placed monolithically

Exterior Girder

$$V_n = \frac{258}{0.85} = 304 \text{ k}$$

$$\begin{cases} V_n \le 0.2\, f'_c\, A_{cv} = 0.2\,(3.25)(30)(28) = 546 \text{ k} \rightarrow \text{okay} \\ V_n \le 800\, A_{cv} = 0.8\,(30)(28) = 672 \text{ k} \rightarrow \text{okay} \end{cases}$$

$$A_{vf} = \frac{304}{60(1.4)} = 3.62 \text{ sq. in.}$$

Between Girders

$$V_n = \frac{92}{0.85} = 108 \text{ k}$$

$$A_{vf} = \frac{108}{60(1.4)} = 1.29 \text{ sq. in.}$$

2. A_f – Flexural Reinforcement

Interior Girder

$M_u = [\ V_u\ a_v + N_{uc}\ (h\text{-}d)\ ] = (290)(12) + 58(2\text{ inches}) = 3596\text{ k-in.}$

$M_u = \phi A_f\ f_y\ [d - A_f\ f_y/(1.7\ f'_c\ b)]$

$$3596 = 0.85\ A_f(60)\left[28 - \frac{A_f(60)}{1.7(3.25)(41)}\right]$$

Solving for A_f gives $A_f = 2.59$ sq. in.

Exterior Girder

$M_u = (258)(12) + 52\ (2) = 3200\text{ k-in}$

$$3200 = 0.85\ A_f(60)\left[28 - \frac{A_f(60)}{1.7(3.25)(30)}\right] \rightarrow A_f = 2.31\text{ k-in}$$

Between Girders

$M_u = (92)(12) = 1104\text{ k-in}$

$$1104 = 0.85\ A_f(60)\left[28 - \frac{A_f(60)}{1.7(3.25)(31)}\right] \rightarrow A_f = 0.79\ \text{in}^2$$

3. A_n – Direct Tension Reinforcement

$$N_{uc} \le \phi A_n\ f_y \ \rightarrow\ A_n = \frac{N_{uc}}{0.85\ f_y}$$

Interior Girder $\quad A_n = \dfrac{58}{(0.85)(60)} = 1.14\text{ in}^2$

Exterior Girder $\quad A_n = \dfrac{52}{(0.85)(60)} = 1.02\text{ in}^2$

Between Girders $\quad A_n = 0$

4. Compute A_s

$$A_s \geq \begin{cases} \left(\dfrac{2A_{vf}}{3} + A_n\right) \\ (A_f + A_n) \\ 0.04\left(\dfrac{f'_c}{f_y}\right)bd = 0.0607b \end{cases}$$

(BDS Art. 8.16.6.8.5)

Interior Girders

$$A_s \geq \begin{cases} \left[\dfrac{2\times(4.06)}{3} + 1.14\right] = 3.85 \text{ in}^2 \\ [2.59 + 1.14] = 3.73 \\ 0.0607(41) = 2.49 \end{cases}$$

$A_s = 3.85$ sq. in. Use #6 tot. 9

Exterior Girders

$$A_s \geq \begin{cases} (2/3)(3.62) + 1.02 = 3.43 \text{ in}^2 \\ 2.31 + 1.02 = 3.33 \text{ in}^2 \\ 0.0607(30) = 1.82 \text{ in}^2 \end{cases}$$

$A_s = 3.43 \text{ in}^2$ Use #6 tot. 8

Between Girders

$$A_s \geq \begin{cases} [(2/3)(1.29)] = 0.86 \text{ in}^2 \\ 0.79 \text{ in}^2 \\ 0.0607(31) = 1.88 \text{ in}^2 \end{cases}$$

$A_s = 1.88 \text{ in}^2$ Use #6 tot. 5

E. Compute A_h – Shear Reinforcement (Secondary Tension Reinforcement)

$A_h \geq 0.5\ (A_s - A_n)$ (BDS Art. 8.16.6.8.4)

Interior Girder

$A_h = 0.5(3.85 - 1.14) = 1.36\ in^2$ Use #5 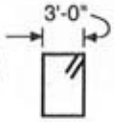

tot 3

Exterior Girders

$A_h = 0.5\ (3.43 - 1.02) = 1.21\ in^2$ Use #5 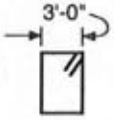

tot 3

Between Girders

$A_h = 0.5\ (1.88) = 0.94\ in^2$ Use #5 tot 4

F. Compute A'_s – Longitudinal Corbel Distribution Reinforcement

Exterior Girder

$(A'_s)_{min} = 0.5\ A_s$

$A'_s = 0.5\ (3.43)$ sq. in. $= 1.72\ in^2$ Use 4 #6 each end.

Other Locations

Provide minimum distribution reinforcement 2 #5 bars.

G. Compute A_v – Diagonal Tension Reinforcement

Diagonal Tension reinforcement is required between columns to cross the diagonal crack. At column supports the shear can be carried through column steel.

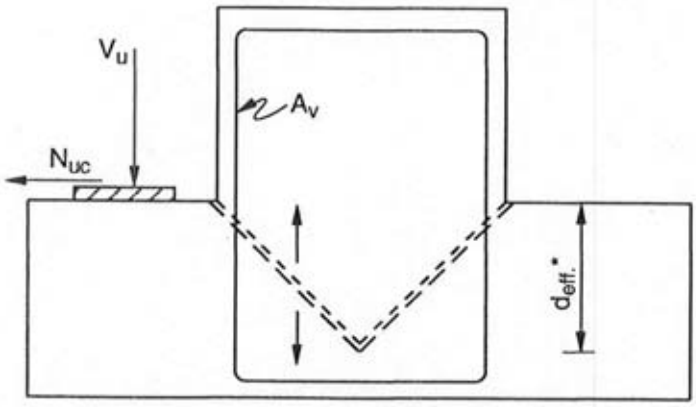

$V_u = \phi(V_s + V_c)$

V_c is reduced for concrete in tension

*$d_{eff.}$ is used in calculations of V_c.

1. At Girders – Assume interior girder controls

$$V_c = 2\left[1 + \frac{N_u}{(500A_g)}\right]\sqrt{f'_c}\, b_w d_{eff}$$ (BDS Art. 8.16.6.2.3.)

$N_u = -V_u = -290$ k (tension)

$d_{eff} = 18$ inches

$A_g = (18)(41 \text{ inches}) = 738 \text{ in}^2$

$$V_c = 2\left[1 - \frac{290}{0.5(738)}\right]\sqrt{3250}\,(41)(18) = 18 \text{ k}$$

$(V_s)_{req.} = \frac{V_u}{\phi} - V_c = \frac{290}{0.85} - 18 = 323$ k This force is resisted by reinforcement crossing the tension crack.

Try #6 ⊏⊐ at 18 inches max. bent cap stirrups and 4 #7 ⁄ at each girder

#6 ⊏⊐ $A = (6 \text{ legs})(0.44 \text{ in}^2) = 2.64 \text{ in}^2$ (6 legs effective within b_{int} = 41 inches)

4 #7 ⁄ $A = 4(0.60 \text{ in}^2)(\sin x + \cos x) = 3.38 \text{ in}^2$ for $x = 45°$ (BDS Art. 8.16.6.3.3)

$A_{tot} = 2.64 + 3.38 = 6.02 \text{ in}^2$

$(V_s)_{prov} = A_s \times f_y = (6.02 \text{ in}^2)(60 \text{ ksi}) = 361$ k

$(V_s)_{prov} > (V_s)_{req} \rightarrow$ okay

∴ Use 4 #7 ⁄ @ each girder

#6 ⊏⊐ @ 18 inches max. bent cap stirrups

2. Between Girders

$N_u = -V_u = -92$ k

$$V_c = 2\left(1 - \frac{92}{0.5(738)}\right)\sqrt{3250}\ (41)(18) = 63 \text{ k}$$

$$(V_s)_{req} = \frac{V_u}{\phi} - V_c = \frac{92}{0.85} - 63 = 45 \text{ k}$$

using #6 ⊏⊐ @ 18 along cap

for b = 30 inches, 4 legs effective

$V_s = 4(0.44 \text{ in}^2)(60 \text{ ksi}) = 105 \text{ k} > (V_s)_{req} \rightarrow$ okay

∴ No diagonal bars required

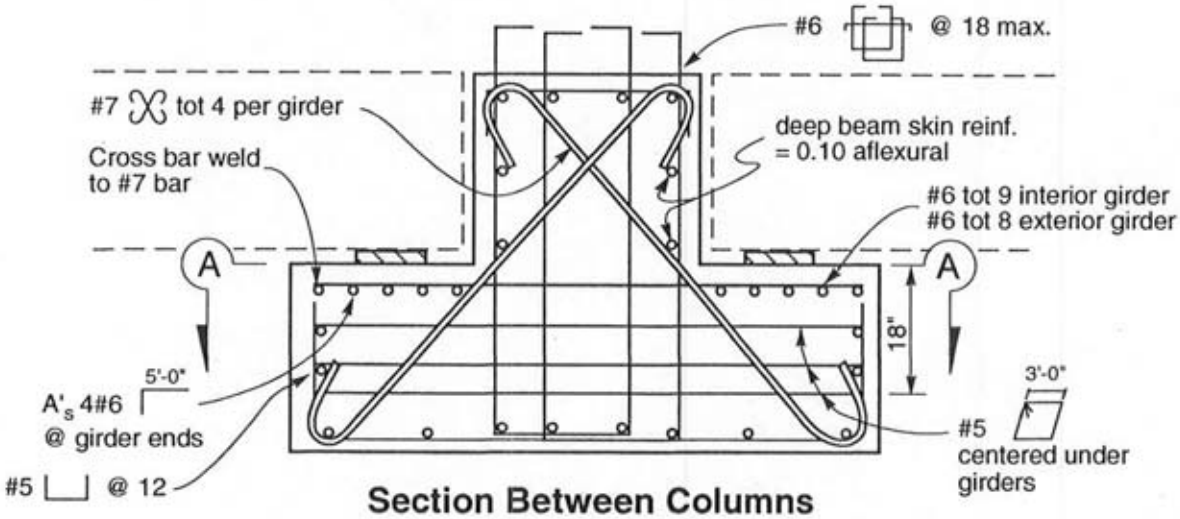

Section Between Columns

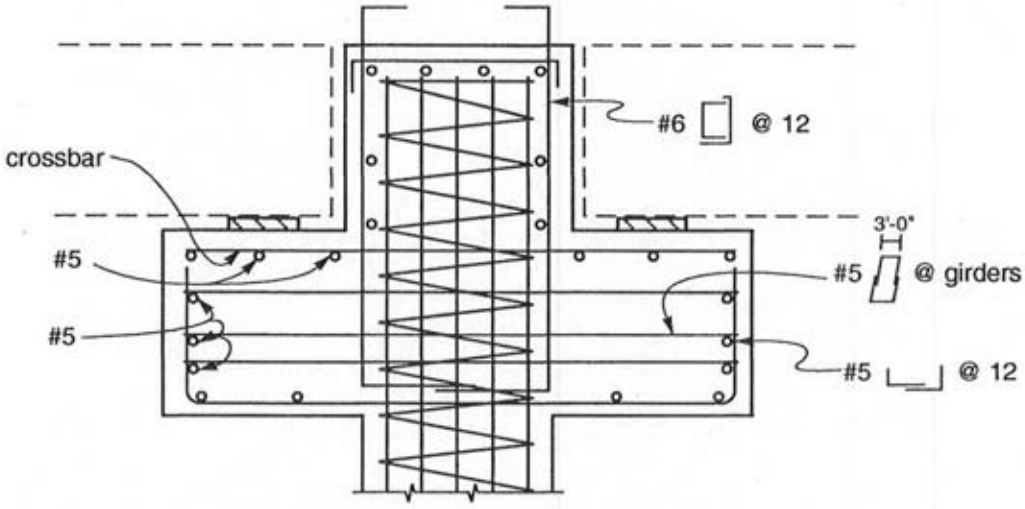

Section @ Column

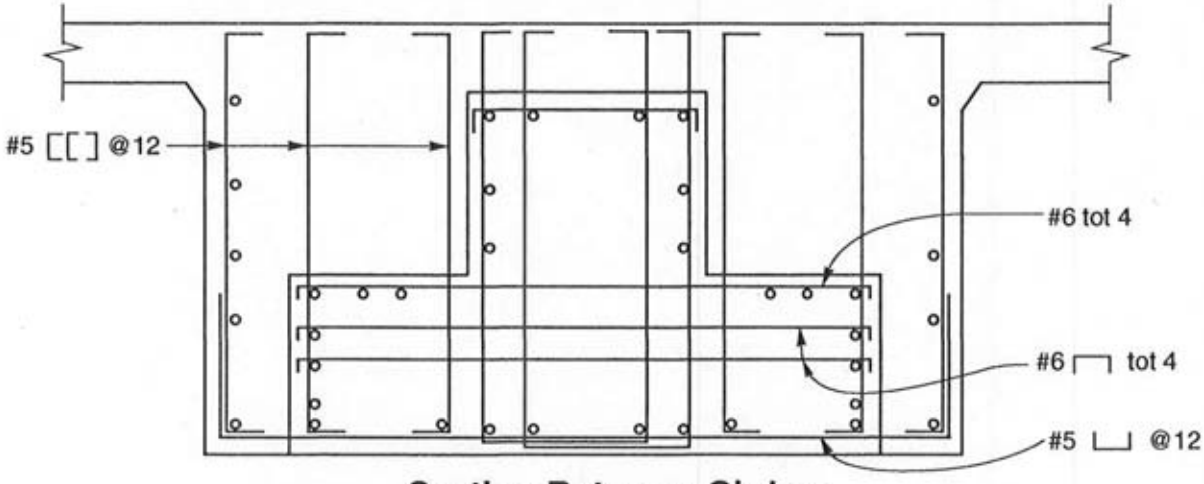

Section Between Girders

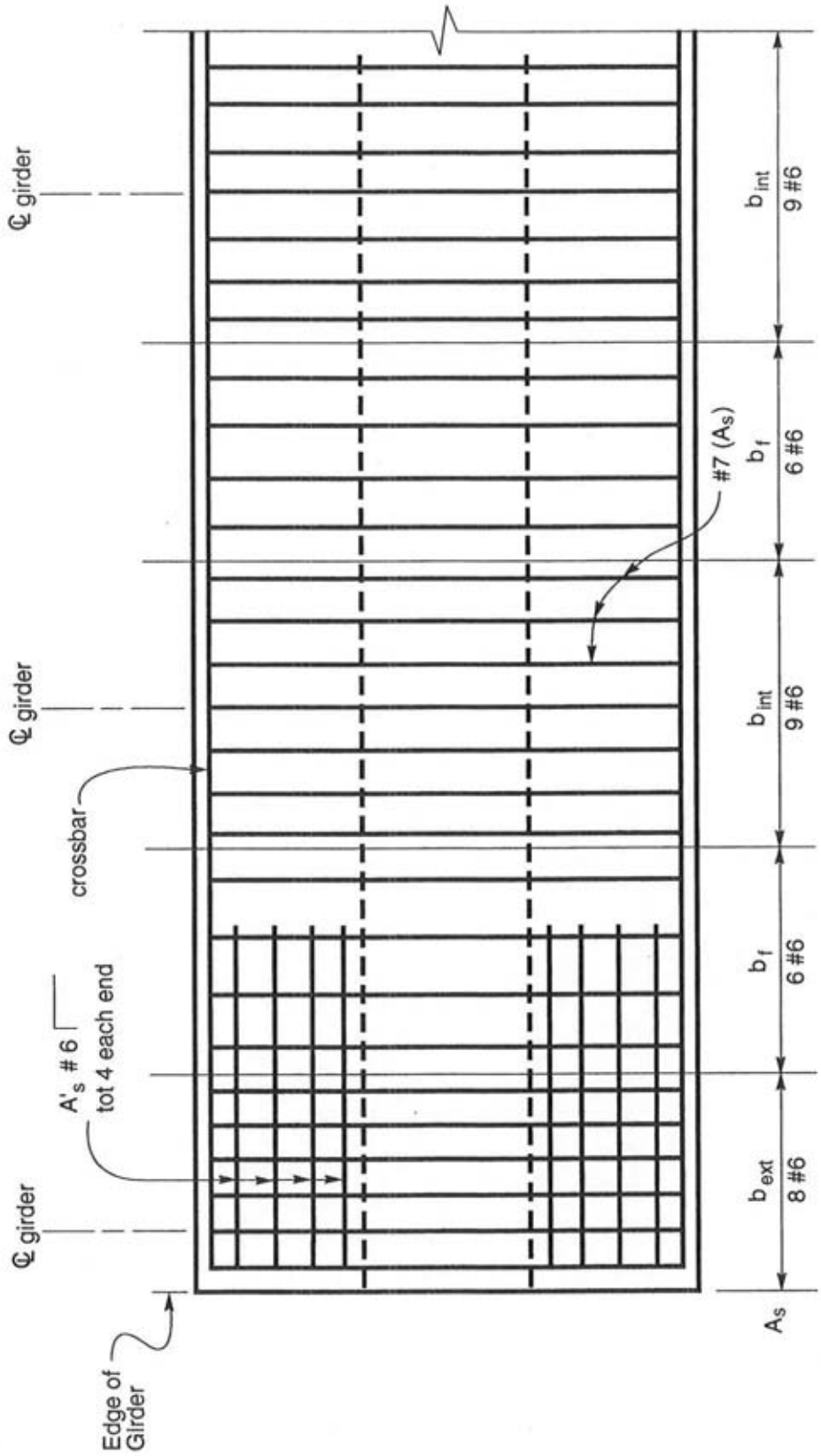

Section A-A (Orthogonal)

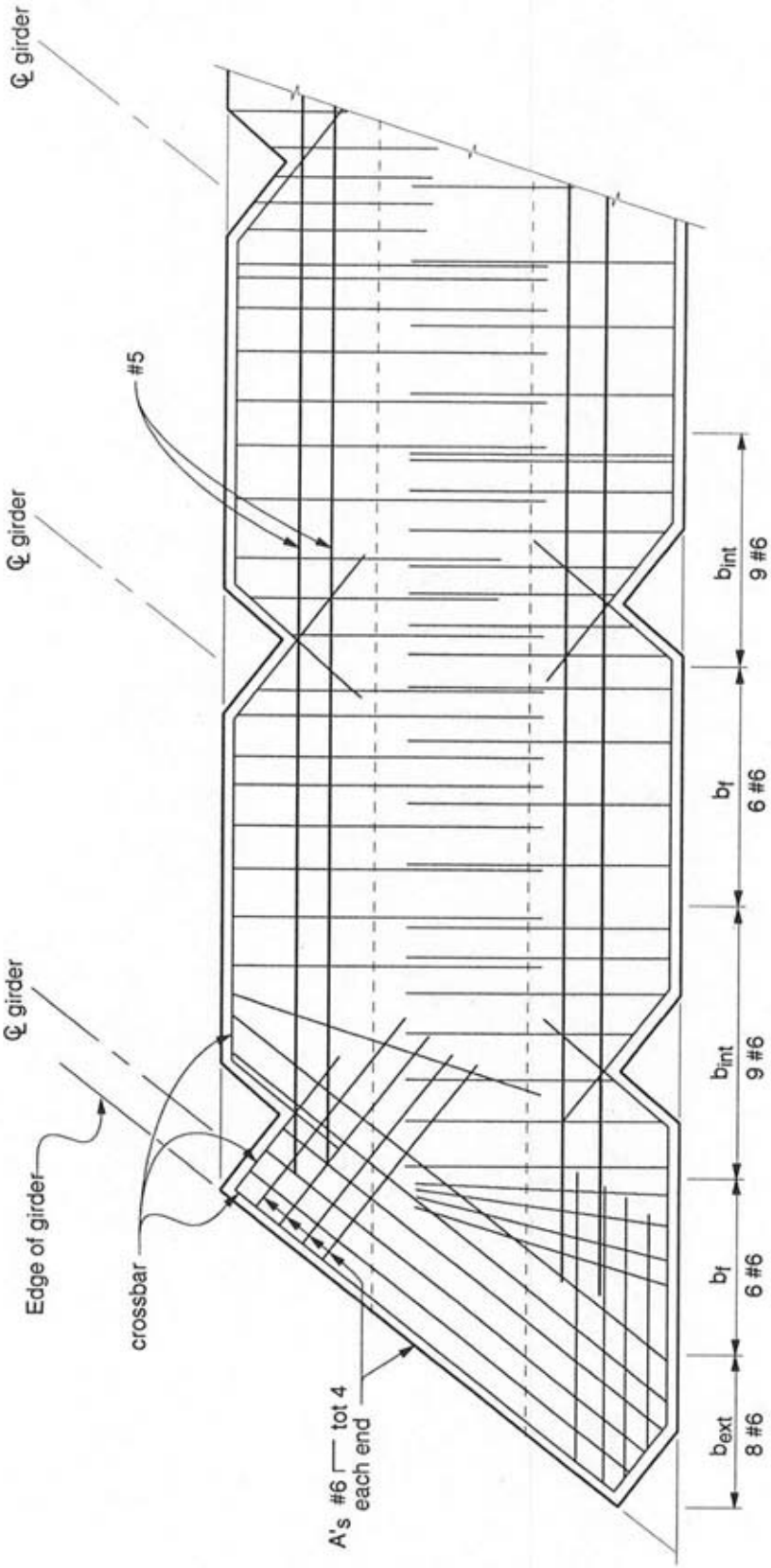

Section A-A (Skewed)

III. Design Flow Chart

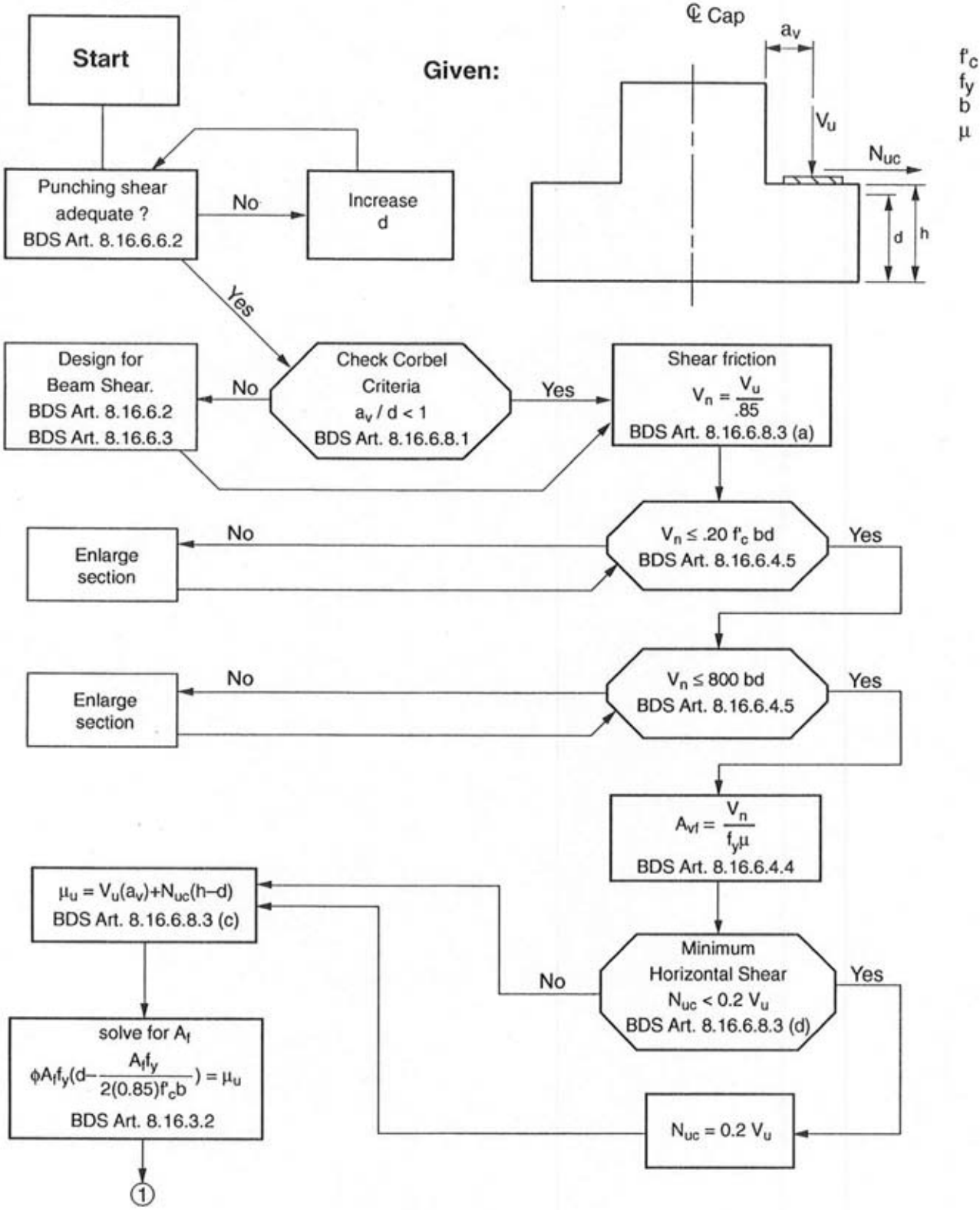

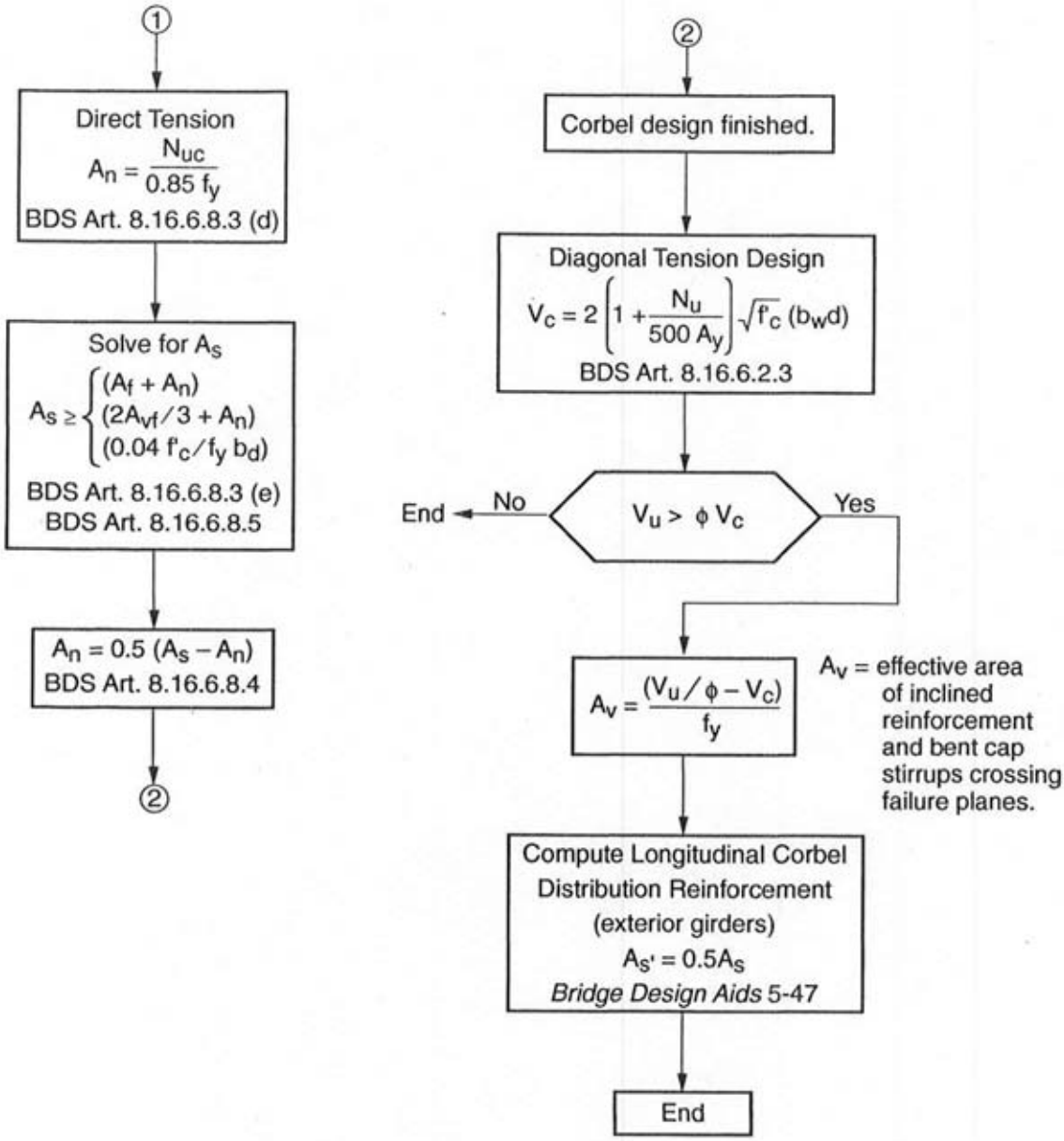
1
Direct Tension
$A_n = \frac{N_{uc}}{0.85 f_y}$
BDS Art. 8.16.6.8.3 (d)
Solve for A_s
$A_s \geq \begin{cases} (A_f + A_n) \\ (2A_{vf}/3 + A_n) \\ (0.04 f'_c/f_y b_d) \end{cases}$
BDS Art. 8.16.6.8.3 (e)
BDS Art. 8.16.6.8.5
$A_n = 0.5 (A_s - A_n)$
BDS Art. 8.16.6.8.4
2
2
Corbel design finished.
Diagonal Tension Design
$V_c = 2\left(1 + \frac{N_u}{500 A_y}\right)\sqrt{f'_c}\,(b_w d)$
BDS Art. 8.16.6.2.3
$V_u > \phi V_c$
No
End
Yes
$A_v = \frac{(V_u/\phi - V_c)}{f_y}$
A_v = effective area of inclined reinforcement and bent cap stirrups crossing failure planes.
Compute Longitudinal Corbel Distribution Reinforcement (exterior girders)
$A_{s'} = 0.5A_s$
Bridge Design Aids 5-47
End

AREAS AND PERIMETERS FOR VARIOUS BAR SIZES AND NUMBER OF BARS

TOP NUMBERS ARE AREAS BOTTOM NUMBERS ARE PERIMETERS

Size / No.	#3	#4	#5	#6	#7	#8	#9	#10	#11	#14	#18	Size / No.
1	0.11 1.18	0.20 1.57	0.31 1.96	0.44 2.36	0.60 2.75	0.79 3.14	1.00 3.54	1.27 3.99	1.56 4.43	2.25 5.32	4.00 7.09	1
2	0.22 2.36	0.40 3.14	0.62 3.93	0.88 4.71	1.20 5.50	1.58 6.28	2.00 7.09	2.54 7.98	3.12 8.86	4.50 10.63	8.00 14.18	2
3	0.33 3.53	0.60 4.71	0.93 5.89	1.32 7.07	1.80 8.25	2.37 9.43	3.00 10.63	3.81 11.97	4.68 13.29	6.75 15.95	12.00 21.26	3
4	0.44 4.71	0.80 6.28	1.24 7.85	1.76 9.42	2.40 11.00	3.16 12.57	4.00 14.18	5.08 15.96	6.24 17.72	9.00 21.26	16.00 28.35	4
5	0.55 5.89	1.00 7.86	1.55 9.82	2.20 11.78	3.00 13.75	3.95 15.71	5.00 17.72	6.35 19.95	7.80 22.15	11.25 26.58	20.00 35.44	5
6	0.66 7.07	1.20 9.43	1.86 11.78	2.64 14.14	3.60 16.49	4.74 18.85	6.00 21.26	7.62 23.94	9.36 26.58	13.50 31.90	24.00 42.53	6
7	0.77 8.25	1.40 11.00	2.17 13.74	3.08 16.49	4.20 19.24	5.53 21.99	7.00 24.81	8.89 27.93	10.92 31.01	15.75 37.21	28.00 49.62	7
8	0.88 9.42	1.60 12.57	2.48 15.70	3.52 18.85	4.80 21.99	6.32 25.14	8.00 28.35	10.16 31.92	12.48 35.44	18.00 42.53	32.00 56.70	8
9	0.99 10.60	1.80 14.14	2.79 17.67	3.96 21.20	5.40 24.74	7.11 28.28	9.00 31.90	11.43 35.91	14.04 39.87	20.25 47.84	36.00 63.79	9
10	1.10 11.78	2.00 15.71	3.10 19.63	4.40 23.56	6.00 27.49	7.90 31.42	10.00 35.44	12.70 39.90	15.60 44.30	22.50 53.16	40.00 70.88	10
11	1.21 12.96	2.20 17.28	3.41 21.59	4.84 25.92	6.60 30.24	8.69 34.56	11.00 38.98	13.97 43.89	17.16 48.73	24.75 58.48	44.00 77.97	11
12	1.32 14.14	2.40 18.85	3.72 23.56	5.28 28.27	7.20 32.99	9.48 37.70	12.00 42.53	15.24 47.88	18.72 53.16	27.00 63.79	48.00 85.06	12
13	1.43 15.31	2.60 20.42	4.03 25.52	5.72 30.63	7.80 35.74	10.27 40.85	13.00 46.07	16.51 51.87	20.28 57.59	29.25 69.11	52.00 92.14	13
14	1.54 16.49	2.80 21.99	4.34 27.48	6.16 32.98	8.40 38.49	11.06 43.99	14.00 49.62	17.78 55.86	21.84 62.02	31.50 74.42	56.00 99.23	14
15	1.65 17.67	3.00 23.57	4.65 29.45	6.60 35.34	9.00 41.24	11.85 47.13	15.00 53.16	19.05 59.85	23.40 66.45	33.75 79.74	60.00 106.32	15
16	1.76 18.85	3.20 25.14	4.96 31.41	7.04 37.70	9.60 43.98	12.64 50.27	16.00 56.70	20.32 63.84	24.96 70.88	36.00 85.06	64.00 113.41	16
17	1.87 20.03	3.40 26.71	5.27 33.37	7.48 40.05	10.20 46.73	13.43 53.41	17.00 60.25	21.59 67.83	26.52 75.31	38.25 90.37	68.00 120.50	17
18	1.98 21.20	3.60 28.28	5.58 35.33	7.92 42.41	10.80 49.48	14.22 56.56	18.00 63.79	22.86 71.82	28.08 79.74	40.50 95.69	72.00 127.58	18
19	2.09 22.38	3.80 29.85	5.89 37.30	8.36 44.76	11.40 52.23	15.01 59.70	19.00 67.34	24.13 75.81	29.64 84.17	42.75 101.00	76.00 134.67	19
20	2.20 23.56	4.00 31.42	6.20 39.26	8.80 47.12	12.00 54.98	15.80 62.84	20.00 70.88	25.40 79.80	31.20 88.60	45.00 106.32	80.00 141.76	20
21	2.31 24.74	4.20 32.99	6.51 41.22	9.24 49.48	12.60 57.73	16.59 65.98	21.00 74.42	26.67 83.79	32.76 93.03	47.25 111.64	84.00 148.85	21
22	2.42 25.92	4.40 34.56	6.82 43.19	9.68 51.83	13.20 60.48	17.38 69.12	22.00 77.97	27.94 87.78	34.32 97.46	49.50 116.95	88.00 155.94	22
23	2.53 27.09	4.60 36.13	7.13 45.15	10.12 54.19	13.80 63.23	18.17 72.27	23.00 81.51	29.21 91.77	35.88 101.89	51.75 122.27	92.00 163.02	23
24	2.64 28.27	4.80 37.70	7.44 47.11	10.56 56.54	14.40 65.98	18.96 75.41	24.00 85.06	30.48 95.76	37.44 106.32	54.00 127.58	96.00 170.11	24
25	2.75 29.45	5.00 39.28	7.75 49.08	11.00 58.90	15.00 68.73	19.75 78.55	25.00 88.60	31.75 99.75	39.00 110.75	56.25 132.90	100.00 177.20	25
26	2.86 30.63	5.20 40.85	8.06 51.04	11.44 61.26	15.60 71.47	20.54 81.69	26.00 92.14	33.02 103.74	40.56 115.18	58.50 138.22	104.00 184.29	26
27	2.97 31.81	5.40 42.42	8.37 53.00	11.88 63.61	16.20 74.22	21.33 84.83	27.00 95.69	34.29 107.73	42.12 119.61	60.75 143.53	108.00 191.38	27
28	3.08 32.98	5.60 43.99	8.68 54.96	12.32 65.97	16.80 76.97	22.12 87.98	28.00 99.23	35.56 111.72	43.68 124.04	63.00 148.85	112.00 198.46	28
29	3.19 34.16	5.80 45.56	8.99 56.93	12.76 68.32	17.40 79.72	22.91 91.12	29.00 102.78	36.83 115.71	45.24 128.47	65.25 154.16	116.00 205.55	29
30	3.30 35.34	6.00 47.13	9.30 58.89	13.20 70.68	18.00 82.47	23.70 94.26	30.00 106.32	38.10 119.70	46.80 132.90	67.50 159.48	120.00 212.64	30
No. / Size	#3	#4	#5	#6	#7	#8	#9	#10	#11	#14	#18	No / Size

AREAS AND PERIMETERS FOR VARIOUS BAR SIZES AND SPACING

TOP NUMBERS ARE AREAS BOTTOM NUMBERS ARE PERIMETERS

Spacing	#3	#4	#5	#6	#7	#8	#9	#10	#11	#14	#18	Spacing
3"	0.44 4.7	0.80 6.3	1.24 7.8	1.76 9.4	2.40 11.0	3.16 12.6	4.00 14.2					3"
3¼"	0.41 4.4	0.74 5.8	1.14 7.2	1.62 8.7	2.22 10.2	2.92 11.6	3.69 13.1					3¼"
3½"	0.38 4.0	0.69 5.4	1.06 6.7	1.51 8.1	2.06 9.4	2.71 10.8	3.43 12.1	4.36 13.7				3½"
3¾"	0.35 3.8	0.64 5.0	0.99 6.3	1.41 7.5	1.92 8.8	2.53 10.0	3.20 11.3	4.06 12.8	4.99 14.2			3¾"
4"	0.33 3.5	0.60 4.7	0.93 5.9	1.32 7.1	1.80 8.3	2.37 9.4	3.00 10.6	3.81 12.0	4.68 13.3	6.75 16.0		4"
4¼"	0.31 3.3	0.56 4.4	0.88 5.5	1.24 6.7	1.69 7.8	2.23 8.9	2.82 10.0	3.59 11.3	4.40 12.5	6.35 15.0	11.30 20.0	4¼"
4½"	0.29 3.1	0.53 4.2	0.83 5.2	1.17 6.3	1.60 7.3	2.11 8.4	2.67 9.5	3.39 10.6	4.16 11.8	6.00 14.2	10.68 18.9	4½"
4¾"	0.28 3.0	0.51 4.0	0.78 5.0	1.11 6.0	1.52 6.9	2.00 7.9	2.53 9.0	3.21 10.1	3.94 11.2	5.68 13.4	10.10 17.9	4¾"
5"	0.26 2.8	0.48 3.8	0.74 4.7	1.06 5.7	1.44 6.6	1.90 7.5	2.40 8.5	3.05 9.6	3.74 10.6	5.40 12.8	9.60 17.0	5"
5¼"	0.25 2.7	0.46 3.6	0.71 4.5	1.01 5.4	1.37 6.3	1.81 7.2	2.29 8.1	2.90 9.1	3.57 10.1	5.14 12.2	9.14 16.2	5¼"
5½"	0.24 2.6	0.44 3.4	0.68 4.3	0.96 5.1	1.31 6.0	1.72 6.9	2.18 7.7	2.77 8.7	3.40 9.7	4.91 11.6	8.73 15.5	5½"
5¾"	0.23 2.5	0.42 3.3	0.65 4.1	0.92 4.9	1.25 5.7	1.65 6.6	2.09 7.4	2.65 8.3	3.26 9.2	4.69 11.1	8.34 14.8	5¾"
6"	0.22 2.4	0.40 3.1	0.62 3.9	0.88 4.7	1.20 5.5	1.58 6.3	2.00 7.1	2.54 8.0	3.12 8.9	4.50 10.6	8.00 14.2	6"
6½"	0.20 2.2	0.37 2.9	0.57 3.6	0.81 4.4	1.11 5.1	1.46 5.8	1.85 6.5	2.35 7.4	2.88 8.2	4.15 9.8	7.39 13.1	6½"
7"	0.19 2.0	0.34 2.7	0.53 3.4	0.75 4.0	1.03 4.7	1.35 5.4	1.71 6.1	2.18 6.8	2.67 7.6	3.86 9.1	6.86 12.2	7"
7½"	0.18 1.9	0.32 2.5	0.50 3.1	0.70 3.8	0.96 4.4	1.26 5.0	1.60 5.7	2.03 6.4	2.50 7.1	3.60 8.5	6.40 11.3	7½"
8"	0.17 1.8	0.30 2.4	0.47 2.9	0.66 3.5	0.90 4.1	1.19 4.7	1.50 5.3	1.91 6.0	2.34 6.7	3.38 8.0	6.00 10.6	8"
8½"	0.16 1.7	0.28 2.2	0.44 2.8	0.62 3.3	0.85 3.9	1.12 4.4	1.41 5.0	1.79 5.6	2.20 6.3	3.18 7.5	5.65 10.0	8½"
9"	0.15 1.6	0.27 2.1	0.41 2.6	0.59 3.1	0.80 3.7	1.05 4.2	1.33 4.7	1.69 5.3	2.08 5.9	3.00 7.1	5.34 9.5	9"
9½"	0.14 1.5	0.25 2.0	0.39 2.5	0.56 3.0	0.76 3.5	1.00 4.0	1.26 4.5	1.60 5.0	1.97 5.6	2.84 6.7	5.06 9.0	9½"
10"	0.13 1.4	0.24 1.9	0.37 2.4	0.53 2.8	0.72 3.3	0.95 3.8	1.20 4.3	1.52 4.8	1.87 5.3	2.70 6.4	4.80 8.5	10"
10½"	0.13 1.3	0.23 1.8	0.35 2.2	0.50 2.7	0.69 3.1	0.90 3.6	1.14 4.0	1.45 4.6	1.78 5.1	2.57 6.1	4.57 8.1	10½"
11"	0.12 1.3	0.22 1.7	0.34 2.2	0.48 2.6	0.65 3.0	0.86 3.4	1.09 3.9	1.39 4.4	1.70 4.8	2.45 5.8	4.36 7.7	11"
11½"		0.21 1.6	0.32 2.0	0.46 2.5	0.63 2.9	0.82 3.3	1.04 3.7	1.33 4.2	1.63 4.6	2.35 5.6	4.17 7.4	11½"
12"		0.20 1.6	0.31 2.0	0.44 2.4	0.60 2.8	0.79 3.1	1.00 3.5	1.27 4.0	1.56 4.4	2.25 5.3	4.00 7.1	12"
13"		0.18 1.4	0.29 1.8	0.41 2.2	0.55 2.5	0.73 2.9	0.92 3.3	1.17 3.7	1.44 4.1	2.08 4.9	3.69 6.5	13"
14"		0.17 1.3	0.27 1.7	0.38 2.0	0.51 2.4	0.68 2.7	0.86 3.0	1.09 3.4	1.24 3.8	1.93 4.6	3.43 6.1	14"
15"		0.16 1.3	0.25 1.6	0.35 1.9	0.48 2.2	0.63 2.5	0.80 2.8	1.02 3.2	1.25 3.5	1.80 4.3	3.20 5.7	15"
16"		0.15 1.2	0.23 1.5	0.33 1.8	0.45 2.1	0.59 2.4	0.75 2.7	0.95 3.0	1.17 3.3	1.69 4.0	3.00 5.3	16"
17"		0.14 1.1	0.22 1.4	0.31 1.7	0.42 1.9	0.56 2.2	0.71 2.5	0.90 2.8	1.10 3.1	1.59 3.8	2.82 5.0	17"
18"		0.13 1.1	0.21 1.3	0.29 1.6	0.40 1.8	0.53 2.1	0.67 2.4	0.85 2.7	1.04 2.9	1.50 3.6	2.67 4.7	18"

Anchorage to Concrete

Steel-to-concrete or concrete-to-concrete connections can be accomplished in various ways. This design aid has been prepared to describe the most widely used anchorage systems available and to assist the designer in selecting the system that is best suited for a particular application.

Loading and Design Requirements:

The design provisions of this design aid are based on the Load Factor Design method. Principles and requirements of the Bridge Design Specifications are applicable for all load combinations except as modified herein.

The designer is to determine the loading combinations and the corresponding load factors for each application.

A. Anchoring Into Existing Concrete

1. Mechanical Expansion Anchors

Mechanical expansion anchors (MEAs) are easy-to-use, readily available anchorage devices. MEAs are frequently used to anchor minor or temporary attachments such as signs, brackets, inspection ladders, safety railings, utility pipes, light fixtures, etc., to hardened concrete.

Material and installation methods of MEAs must comply with the requirements of section 75-1.03 of the Standard Specifications. Figure A.1 shows the only two types of MEAs that have been tested and approved by Translab.

a) Shell anchors with internal threads require an independent stud, nut, and washer. This type is stronger in tension.
b) Integral stud anchors are furnished with a nut and cut washer. This type is easier to install in a multi-hole base plate and is stronger in shear.

While the self-drilling variety of the shell anchors are not approved, other types of MEAs may be acceptable with prior testing. Resin capsule anchors (as discussed in a later section) may also be used as an alternative to MEAs.

Table A.1 lists the shear and tensile design strengths of shell and stud-type MEAs. When loaded in tension, these types of MEAs do not develop the yield strength of the stud. Instead, they generally fail by initial slipping followed by a concrete cone failure. Yield strength is then defined as the force after which the stud will slip at a higher rate as the load increases. The design strengths listed in Table A.1 include the strength reduction factor ϕ.

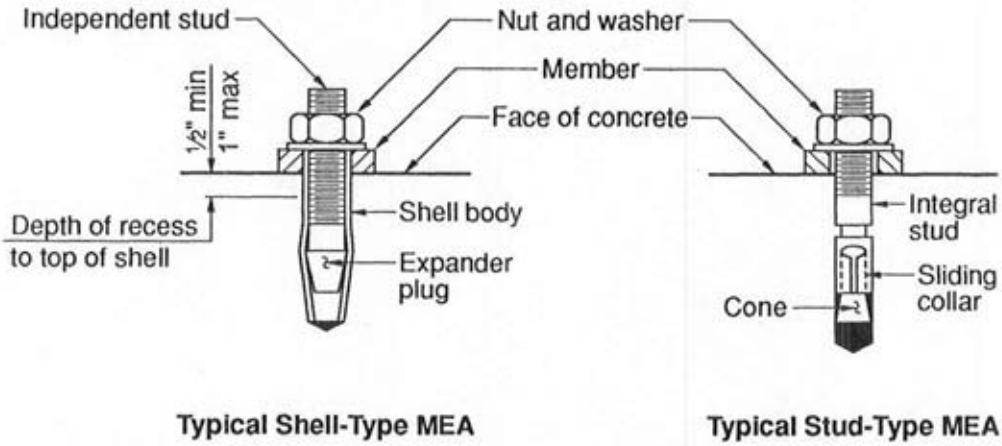

Figure A.1 – Common Types of Mechanical Expansion Anchors (MEA)

Table A.1 – Design Data for Shell and Stud-Type Mechanical Expansion Anchors

Stud diameter, inches	Shear strength, kips	Tensile strength, kips
¼	0.4	0.4
⅜	0.8	1.0
½	1.5	1.1
⅝	2.1	2.1
¾	2.4	2.4

The designer should take the following items in consideration when selecting Mechanical Expansion Anchors:

a) Design strengths shown in Table A.1 are for static load conditions only; when dynamic loading governs or for critical applications such as installations over traffic, resin capsule anchors, or grouted or bonded anchors are recommended.
b) Design strengths shown above are based on normal weight concrete having $f'_c = 4000$ psi; for $f'_c = 3250$ psi, multiply values by 0.85; for $f'_c = 5000$ psi multiply values by 1.17. For light weight concrete and other special conditions consult with Translab.
c) If a single MEA is used to hold an attachment, the design strengths allowed in Table A.1 should be reduced by one-half.

d) For both tension and shear, MEAs are considered 100% effective at edge distances of 6 hole diameters or greater (for this purpose the hole diameter can be considered equal to the nominal diameter of the stud plus ⅛"). Edge distance can be reduced down to 3 hole diameters if the design strength is also linearly reduced to 50%.

e) MEAs are considered 100% effective at centers-to-center spacings of 12 hole diameters or greater. Spacings can be reduced down to 6 hole diameters if the design strength is linearly reduced to 50%.

f) When combined loading is present

$$\frac{\text{Factored Shear Load}}{\text{Shear Design Strength}} + \frac{\text{Factored Tensile Load}}{\text{Tensile Design Strength}} \leq 1.0$$

g) To insure proper seating of shell type MEAs, the top of the shell body is recessed from ½ to 1 inch below the concrete surface, and an independent threaded stud rather than a headed bolt is required.

h) In corrosive environments, it is advisable to specify other anchorage systems. There is no pre-approved type of MEA for this environment. Stainless steel MEAs should be used only when approved on a job-by-job basis.

i) Because shell and stud-type MEAs cannot develop the yield strength of the stud, Caltrans limits the size of most MEAs to ¾ inches and the use to light applications. Sufficient concrete depth should be provided beneath the MEA assembly so that the driving force can be resisted during anchorage seating.

j) Figure A.2 shows a typical detail for MEAs to be used in the plans. The designer should indicate the size required. The plans should not show the depth or diameter of the hole.

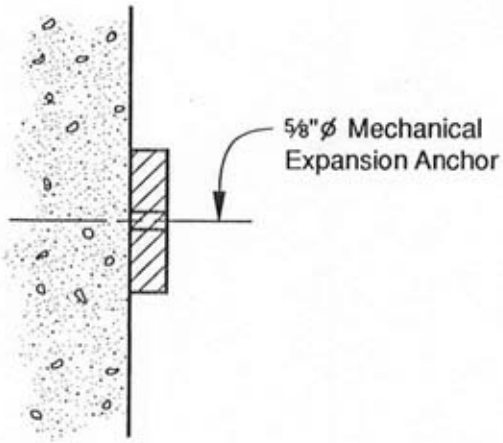

Figure A.2 – Typical Detail for MEA

2. Resin Capsule Anchors

A resin capsule anchor system is composed of 1) a sealed glass capsule that contains pre-measured amounts of resin, small aggregate, and catalyst, and 2) a chisel-pointed threaded steel rod with nut and washer or a rebar. The capsule is inserted into a proper size, clean, drilled hole, and then the chisel-pointed threaded steel rod or rebar is attached to a roto-hammer and power screwed to the bottom of the hole. This process will break the glass capsule and mix its contents, allowing a rapid chemical reaction to occur. The mixed resin compound forms a strong waterproof bond with both the embedded steel and concrete.

Resin capsule anchors can be used in a wide variety of applications. Due to their relatively high cost, however, designers should limit use to applications where other anchoring systems such as MEAs or grouted or bonded dowels are not practical. Resin capsule anchors can be used in overhead and horizontal applications, in corrosive environments, or where dynamic loading is present. They cannot be used under water or where fires are likely to occur.

Table A.2 lists tensile and shear design strengths for the most common sizes of resin capsule anchors. The design values are based on manufacturers' recommendations. Due to lack of testing, the tensile and shear design strengths are based on the minimum tensile and shear ultimate strengths as furnished by various manufacturers multiplied by a modified strength reduction factor of 0.33. Higher design strengths may be permitted in the near future as Translab finishes research on resin anchors.

Table A. 2 – Design Data for Resin Capsule Anchors

Stud diameter inches	Embedment Depth[a] inches	Hole Diameter[a] inches	Tensile design strength, kips	Shear design strength, kips
3/8	3½	7/16, 15/32	2.1	1.7
½	4¼	9/16	3.9	2.1
5/8	3	11/16, ¾	5.8	2.7
¾	6⅝	⅞	8.6	3.1
⅞	6⅝, 7	1	10.8	8.2
1	8¼	1⅛, 1¼	13.0	9.6
1¼	10¼, 12	1½	22.8	15.8

a) Required depth and diameter of the drilled hole may vary slightly, depending on the manufacturer.

b) Install in dry holes only.
c) Use only where ambient temperatures do not exceed 140° F.
d) The concrete should be at least 28 days old and have a minimum compressive strength of 4000 psi. The design table above is based on ASTM A 307 threaded rod. The design table may be used for other types of higher strength steels.
e) Design strengths shown in Table A.2 are for static load conditions only. When dynamic loading governs, the design strengths should be multiplied by 0.5.
f) Minimum curing time for the mixed resin is dependent on ambient temperature, as shown in Table A.3. No special treatment is allowed while curing.
g) Resin capsule anchors are considered 100% effective at edge distances equivalent to or greater than, their standard embedment depths. Edge distances can be reduced down to half their standard embedment depths if the design strength is reduced linearly to 70%.
h) Resin capsule anchors are considered 100% effective if the spacing is equivalent to or greater than their standard embedment depths. Spacing can be reduced to half the standard embedment depth if the design strength is also reduced linearly to 50%.

Table A.3 – Curing Time for Resin

Base Material Temperature	Cure Time
Above 68°	20 Minutes
50° F to 68° F	30 Minutes
32° F to 50° F	1 Hour
23° F to 32° F	5 Hours

Bonding in deep holes using extra-long rods/rebars is occasionally desirable and requires the use of multiple resin capsules (can be of different sizes). This is especially useful when it is necessary to develop the strength of the rod/rebar and insure a ductile failure. Extremely deep holes requiring more than two standard capsules to fill are not recommended.

In corrosive environments, it may be desirable to specify galvanized or stainless steel threaded rod.

A detail similar to the one shown in Figure A.2 may be used in the plans. The plans shall show the diameter of the threaded rod or the size of rebar to be used. The plans and/or the specifications should not indicate the embedment depth or the hole size.

For more information contact the Office of Structural Materials at Translab.

3. Grouted and Bonded Steel Anchors

A simple and economical way of anchoring metal fixtures or new concrete to existing concrete is by placing bar reinforcement dowels or threaded rods into drilled holes filled with grout or bonding material. This anchorage method is strongly recommended whenever applicable. Some applications include attaching new bridge barriers, sign frames or electroliers onto existing bridge decks. These anchoring methods have also been used in bridge abutment and deck widenings, concrete deck overlays, earthquake retrofits, etc.

Grouted or bonded anchor systems are defined as follows:

a) Drill-and-Grout Dowel: refers to the use of neat portland cement paste as covered under section 51-1.13 of the Standard Specifications.
b) Drill-and-Bond Dowels: refers to the use of magnesium phosphate concrete as covered under section 83-2.02D(1) of the Standard Specifications.

Due to lack of comprehensive studies of grouted and bonded anchors, recommendations in this section are based on the various pullout tests performed by Translab. Tables A.4 and A.5 summarize the results of these tests. Yield strength is defined as movement or slip of the embedded steel of 0.01 inch under short term static loading, or a 0.02 inch movement under short term dynamic loading. Tensile design strength is the lesser of the yield strength as defined above or the theoretical yield strength of the anchor rods/rebar multiplied by a strength reduction factor, ϕ (0.5 for grout, 0.75 for bond). Shear design strength is 0.55 of the yield strength of the anchor rods/rebar multiplied by a strength reduction factor $\phi = 0.80$.

Embedment depths listed in Tables A.4 and A.5 are not necessarily enough to develop the actual yield and ultimate strengths of the embedment steel. Deeper holes should be used where ductility of the system is necessary or desirable. Generally, holes having 2 times the minimum embedment depth for reinforcement bars or 1.5 times the minimum embedment depth for threaded rods will develop the ultimate strength of the embedment steel.

Table A.4 – Design Data for Grade 60 Deformed Bar Reinforcement

Size of Rebar	Minimum Edge Distance	Minimum Embedment Depth	Hole Diameter		Design Strength (in kips)			
					Grout		Bond	
			Grout	Bond	Tension	Shear[a]	Tension	Shear[a]
#5	3"	5"	⅞"	1⅛"	3.1	8.2	10.5	8.2
#6	4"	6"	1"	1¼"	4.4	11.6	14.8	11.6
#7	4"	7"	1⅛"	1⅜"	6.0	15.8	20.3	15.8
#8	5"	8"	1¼"	1½"	7.9	20.8	26.7	20.8

Table A.5 – Design Data for ASTM A 307 Threaded Rods

Size of Rod Diameter	Minimum Edge Distance	Minimum Embedment Depth	Hole Diameter		Design Strength (in kips)			
					Grout		Bond	
			Grout	Bond	Tension	Shear[a]	Tension	Shear[a]
⅝"	3"	5"	⅞"	1⅛"	2.3	3.6	6.1	3.6
¾"	4"	6"	1"	1¼"	3.3	5.2	9.0	5.2
⅞"	4"	7"	1⅛"	1⅜"	4.6	7.3	12.5	7.3
1"	5"	8"	1¼"	1½"	6.1	9.6	16.3	9.6

The following factors should be taken in consideration when this anchoring system is used:

a) Whenever the anchor is placed within 10" from the edge of the concrete, the shear design strength should be the lesser of the tabulated value and $V = 1.4\pi d_e^2\sqrt{f'_c}/1000$, where d_e = edge distance; f'_c = compressive strength of concrete; V = shear design strength.

b) Portland cement grout is generally cheaper than mag-phos concrete, but hardens more slowly.

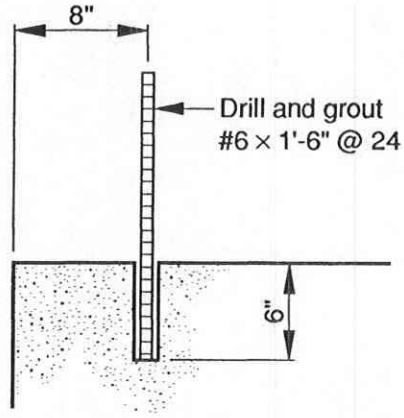

Figure A.3 – Typical Detail for Grouted Anchor

c) Proportioning, mixing, and hole preparation for grouting are more critical than that for bonding, which explains the lower ϕ factor for grouting.
d) Grouted embedments require a minimum of three days to cure, during which time the dowels must not be disturbed. The grout normally develops 50% of its yield capacity in three days and requires a minimum of 28 days to reach full strength. Mag-phos concrete, however, cures in only three hours, and no special treatment while curing is required. Mag-phos develops full strength in three days.
e) It is recommended that bonding be used in applications where tension is the primary force, and that grouting, with bonding as an option, be used where shear is the primary force.
f) Bonding or grouting can only be used in holes drilled at a downward angle of at least 20 degrees to the horizontal, generally detailed as a 3:1 slope.
g) For anchor groups or anchors spaced closer than two times the embedment length, the strength of the concrete may control the design. See note (e) in section B.1 "Cast-In-Place Bolts" in this design aid.
h) The use of epoxy for bonding, as described in SSP B51.60 (DRILL AND EPOXY BOND) is not recommended. Many types of epoxy exhibit high creeping characteristics under sustained tensile loads. In addition, epoxies are generally expensive, require exact mix ratios, may cause dermatitis, and are sensitive to freeze/thaw conditions. If epoxy must be used however, the design values are similar to those of grouting.

Details in the plans should indicate the size of the embedded rebar or the diameter of the threaded rod, the nut/washer combination if required, and the embedment depth. The drill hole diameter is indicated in the Standard Specifications and need not to be shown on the plans. Memo to Designers 9-3 shows some details for anchoring bar reinforcement dowels into vertical surfaces.

4. Rock Bolt Anchors

Rock bolts are commonly used to anchor or tie attachments to rock foundations. Short rock bolts can also be used to anchor into concrete where heavy tensile loading is expected. Some of this system's characteristics are its high cost, ductile failure and low creep rate.

The information in Figure A.4 was developed by the Office of Structural Materials at Translab and reported in Report No. FHWA-CA-TL-79-03, dated February 1979. The figure shows an expansion shell type anchored rock bolt. The bolt is placed inside a cored hole and then rotated. The rotation pulls a wedge into an expansion shell, which expands against and into the wall of the borehole. The void between the bolt and the borehole is then grouted.

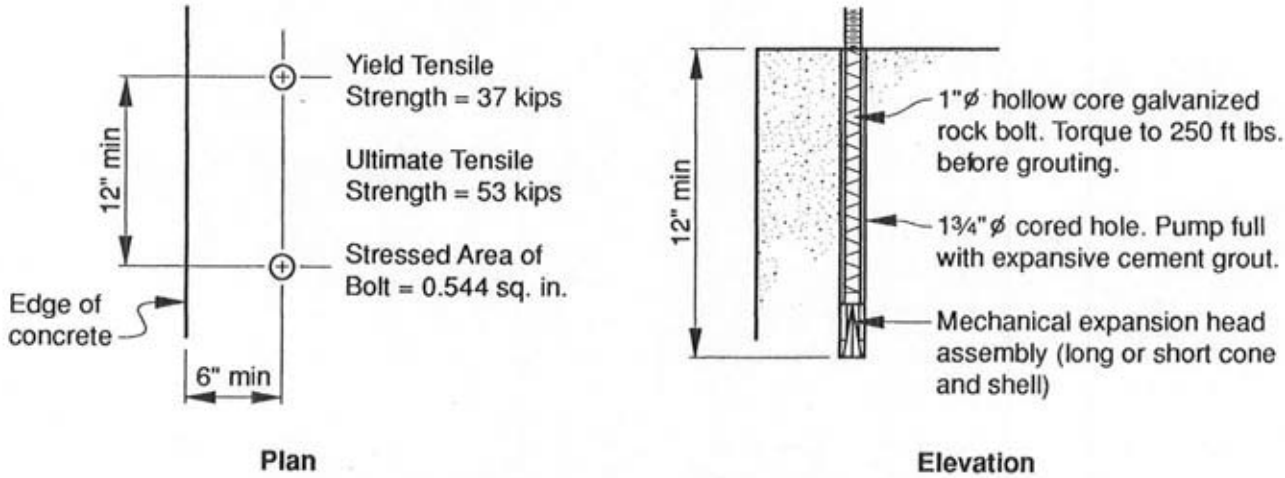

Figure A.4 – Rock Bolt

B. Anchoring into Fresh Concrete (Cast-In-Place)

1. Cast-In-Place Bolts or Headed Studs

The use of cast-in-place bolts (or headed studs welded to a plate) as an anchorage system is common practice in bridge and building construction. This widely used system is best suited for anchorage of metal or precast concrete attachments. Some of the many uses of this system include beam to wall connections, sign frame and electrolier foundations, superstructure to substructure connections, column to footing connections, etc.

While cast-in-place bolts are typically designed to have full embedment, many welded studs are not. Full embedment will usually develop the yield strength of the anchor steel, so that the failure will be of a slow ductile nature. However, the designer may choose to use a short (partial) embedment, for reasons such as a shallow concrete depth or a combined compression shear application. In this case the failure will occur in the concrete, causing a sudden failure. See Figure B.2.

Table B.1 lists the minimum recommended edge distance, the minimum embedment depth to develop the ultimate strength of the anchor, and the tensile and shear design strengths based on the full embedment condition. The tensile design strength is based on the yield strength of the anchor steel multiplied by a strength reduction factor ($\phi = 0.95$). The shear design strength is based on 0.55 the yield strength of the anchor steel multiplied by a strength reduction factor ($\phi = 0.90$).

Table B.1 – Design Data for Cast-In-Place ASTM A 307 Anchor Bolts

Anchor Bolt Diameter	Minimum Edge Distance[a]	Minimum Embedment Depth[b]	Tensile Design Strength, kips	Shear Design Strength, kips
½"	2½"	4"	3.7	2.0
⅝"	3"	5"	7.8	4.1
¾"	3"	6"	11.3	5.9
⅞"	4"	7"	15.7	8.3
1"	4"	8"	20.8	11.0

The following factors should be considered when designing anchor bolts or welded studs:

a) Whenever an anchor is placed at an edge distance smaller than its minimum embedment depth, the design strengths should be adjusted as follows. See Figure B.1.

Tension ....Multiply tabulated value by $\frac{L_e + d_e}{2L_e}$ if $d_e < L_e$, d_e = edge distance
L_e = embedment length

Shear .....The shear design strength is the lesser of the tabulated value and $1.4\pi d_e^2\sqrt{f'_c}/1000$, f'_c in psi.

b) For shorter embedments (partial embedment), anchor groups, or anchors spaced closer than $2L_e$, the concrete may control due to overlapping of the tension failure cones resisting pullout as shown in Figure B.3. The design strengths should be based on the concrete strength as follows:

Tensile design strength $= 2\pi L_e(L_e + d_h)^2\sqrt{f'_c}$ .....for a single anchor
$= 2\sqrt{f'_c} \times$ (area of potential failure plane) .....for a group anchor
Shear design strength $= 0.50 \times$ Tensile design strength

c) Design values shown above are based on the root area of national course threads. If an unthreaded stud is used, the design values of the next larger diameter shown may be used.

d) When combined loading is present

$$\frac{\text{Factored Shear Load}}{\text{Shear Design Strength}} + \frac{\text{Factored Tensile Load}}{\text{Tensile Design Strength}} \leq 1.0$$

e) It is recommended that hairpin or tie back reinforcement be added to strengthen potential concrete failure planes as shown in Figure B.2. Since there is insufficient data on the effect

of this reinforcement on the design strength, it may be looked upon as an enhancement to the anchor system, and the design data shown in Table B.1 remains unchanged.

f) In applications where larger size bolts under lateral loading are used, such as steel superstructure to concrete substructure connections, refer to Translab Report No. FHWA-CA-ST-4167-77-12, "Lateral Resistance of Anchor Bolts Installed in Concrete", dated May 1977.

g) The plans should show the diameter of the bolt or stud, the embedment depth of the anchor bolt, and the desired nut/washer combination if required.

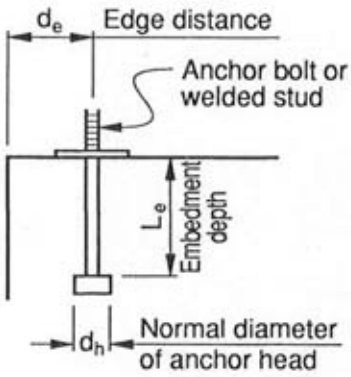

Figure B.1 – Typical Anchor Bolt

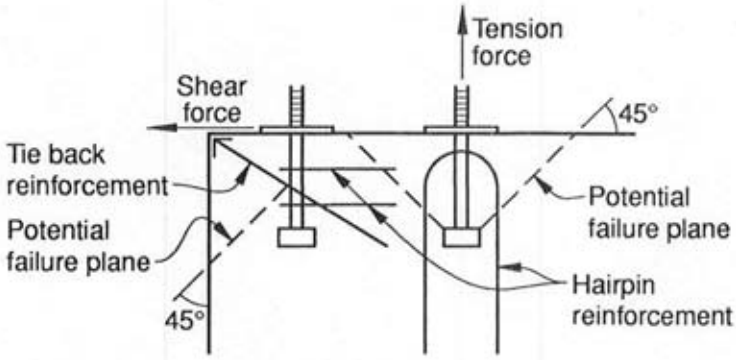

Figure B.2 – Typical Partial Embedment Failure Planes and Reinforcement

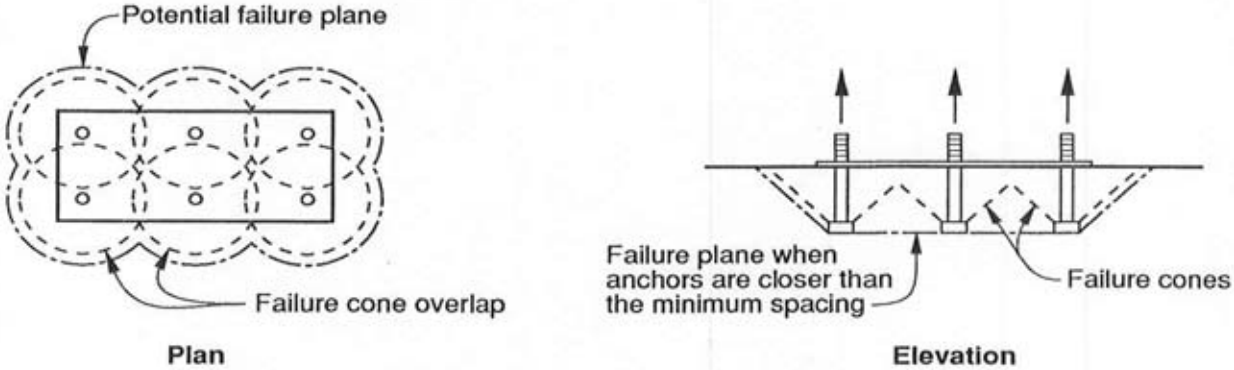

Figure B.3 – Effect of Anchor Group

2. Cast-In-Place Inserts

Inserts are commercially available, prefabricated metal devices with female threads which are specifically made for attachment of bolted connections. Inserts are simple and easy to use in construction since they are attached to form work prior to concrete placement and the contractor

does not need to drill into the hardened concrete later or form around it. Cast-in-place inserts may be used for either temporary or permanent applications. Such applications include overhead signs and fixtures, safety railings, inspection ladders, falsework to concrete connections, etc.

Cast-in-place inserts should meet the requirements of section B75-1.03 of the Standard Specifications and be installed in accordance with Standard Special Provision (SSP) No. 75.50 where they are referred to as cast-in-place anchorage devices. Tensile design strengths for various sizes of inserts are listed in the following table.

Table B.2 - Design Data for Cast-In-Place Inserts

Size (inches)	Tensile Design Strength (kips)
½	2.1
⅝	3.3
¾	3.6
⅞	5.8
1	8.0

A detail similar to the one shown in Figure A.2 may be used in the plans. The plans should indicate the diameter of the bolt or threaded rod be associated with the insert.

3. Cast-In-Place Rebar

Refer to the *Bridge Design Specifications,* Articles 8.24 to 8.32 and the *Bridge Design Details,* Section 13.