BILL OF MATERIALS

ITEM	QTY	DESCRIPTION
101	AR	3M SCOTCHLITE ORANGE REFLECTIVE TAPE 3M # 680-14, 5" W. CT # 053-4813
102	2	DECAL REFL., "CT" CT #053-4759-8
103	2	DECAL, BLK CALTRANS. CT #053-4762
104	1	STRIPING, ORANGE & WHITE DIAGONAL AVERY-DENNISON 911 CT# 053-2047
105	1	DECAL, 'CALTRANS' (WHITE LETTERS) DWG# 03-D002-01 CT# 053-4788
106	1	DECAL, 'CALTRANS' (ORANGE LETTERS) DWG# 03-D007-01 CT# 053-4802
107	1	DECAL, highways.dot.ca.gov CT# 053-4788

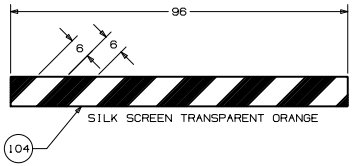

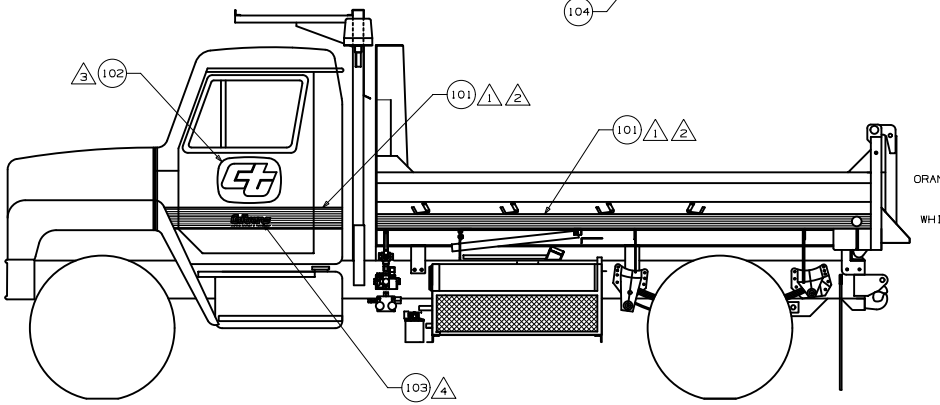

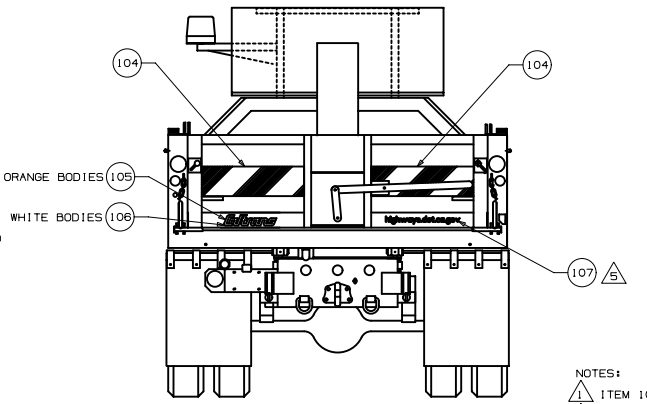

NOTES:

1. ITEM 101 TO PLACED ON WHITE BODIES ONLY
2. ITEM 101 TO BE PLACED AT THE LONGEST HORIZONTAL OPEN FLAT AREA OF THE BODY AND CONTINUE AT THE SAME LEVEL ON THE CAB.
3. ITEM 102 TO BE LOCATED SUCH THAT THE "CT" LOGO IS CENTERED ON THE DOOR.
4. ITEM 103 TO BE CENTERED BELOW "CT"
5. INSTALL ITEM 107 ON MAINTENANCE DUMP TRUCKS ONLY.
6. ALL WELDS, ELECTRICAL AND PAINT WILL BE IN COMPLIANCE WITH CALTRANS EQUIPMENT QUALITY STANDARDS. GO TO www.dot.ca.gov/hq/eqsc TO VIEW EQUIPMENT QUALITY STANDARDS.

REV		DESCRIPTION	BY
A	1/02	ITEM 101, 580 TO 680	DOWNIN

NEXT ASSEMBLY
X

TOLERANCE-UNLESS OTHERWISE SPECIFIED
DECIMAL ±
FRACTIONAL ± 1/16
ANGULAR ± 1
DRILLED HOLES + 1/64
REAMED HOLES ±

STATE OF CALIFORNIA
DEPARTMENT OF TRANSPORTATION
DIVISION OF EQUIPMENT

LIGHT DUTY 4 YARD
DECALS

SCALE X	DATE 9 Jan 02	I-02920-DE	
DRAWN J Payne	DESIGNED X		
CHECKED	APPROVED	SHEET 1 OF 1 SHEETS	