BILL OF MATERIALS

ITEM	QTY	DESCRIPTION	CT STK #
101	AR	3M SCOTCHLITE ORANGE REFLECTIVE TAPE 3M# 680-14 5" WIDE	053-4813
102	2	DECAL, "CT" DWG# 03-D004-01	053-4760
103	1	DECAL, "CALTRANS" ORANGE DWG# 03-D007-01	053-4802
104	2	DECAL, BLACK "CALTRANS" DWG# 03-D005-01	053-4763
105	1	STRIPING, ORANGE & WHITE DIAGONAL AVERY-DENNISON 911	053-2047
106	1	DECAL, "CALTRANS" WHITE DWG# 03-D002-01	053-4753

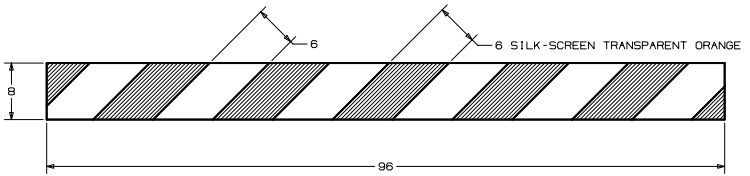

ITEM 105

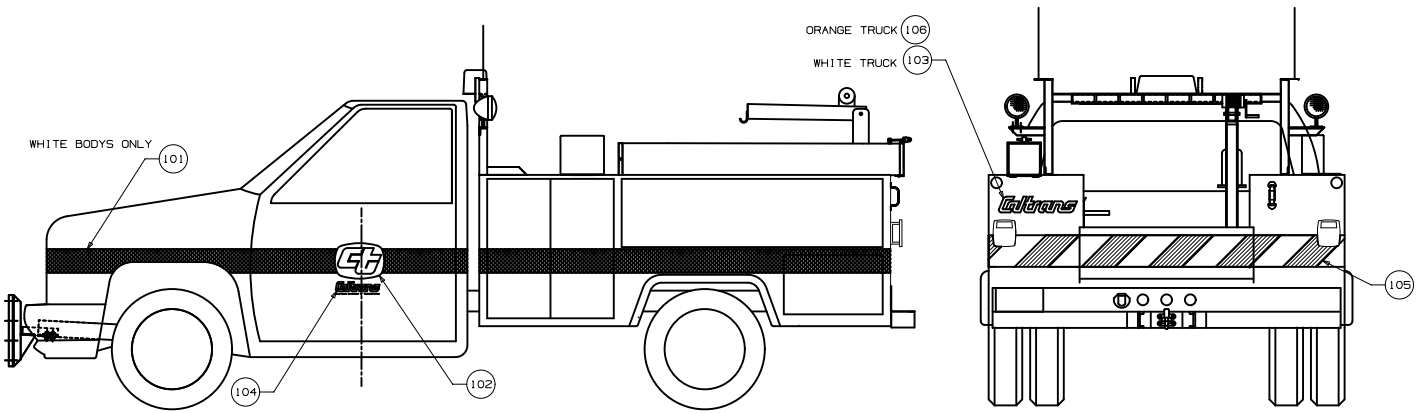

REV	DESCRIPTION	BY
A	1/02 ITEM 101, 580 TO 680	DOWNIN

NEXT ASSEMBLY

TOLERANCE-UNLESS OTHERWISE SPECIFIED
DECIMAL ±
FRACTIONAL ±
ANGULAR ±
DRILLED HOLES ±
REAMED HOLES ±

STATE OF CALIFORNIA
DEPARTMENT OF TRANSPORTATION

EQUIPMENT SERVICE CENTER

1 TON UB DECALS

SCALE	DATE 9/20/01	I-012UB-DE
DRAWN DOWNIN	DESIGNED CAL	
CHECKED	APPROVED	SHEET 1 OF 1 SHEETS