EXHIBIT 1-A

Typical Cross-Section for Environmental Footprint

EXHIBIT 1-A: Typical Cross-Sections For Environmental Footprint

Dist	COUNTY	LOCATION CODE	POST MILES TOTAL PROJECT	SHEET No.	TOTAL SHEETS
08	SBd	15	15.98/29.8		

REGISTERED CIVIL ENGINEER DATE

PLANS APPROVAL DATE

REGISTERED PROFESSIONAL ENGINEER No. Exp. CIVIL STATE OF CALIFORNIA

THE STATE OF CALIFORNIA OR ITS OFFICERS OR AGENTS SHALL NOT BE RESPONSIBLE FOR THE ACCURACY OR COMPLETENESS OF SCANNED COPIES OF THIS PLAN SHEET.

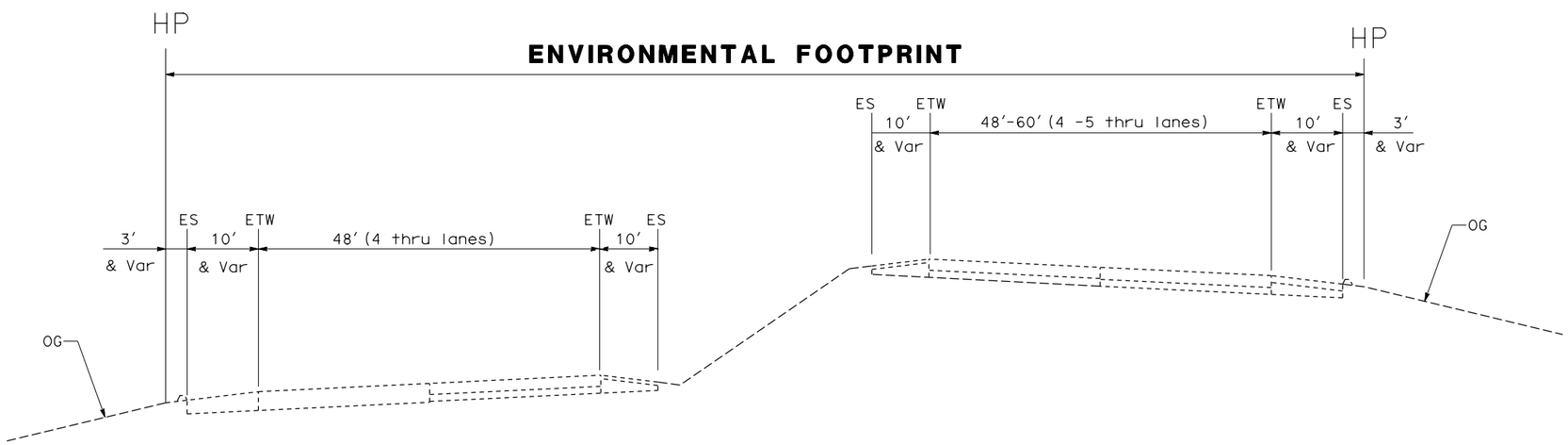

ROUTE 15

PM R15.20 TO 23.12

PM R26.47 TO 30.80

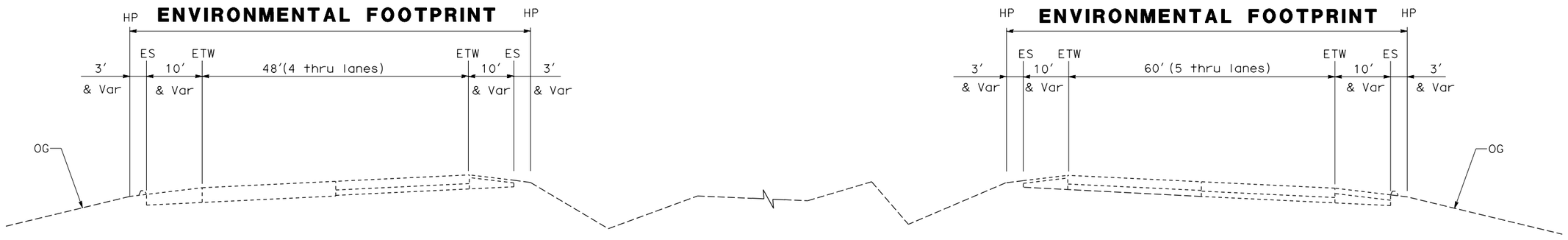

ROUTE 15

PM 23.12 TO R26.47

TYPICAL CROSS SECTIONS FOR ENVIRONMENTAL FOOTPRINT

REVISED BY | DATE REVISED

CALCULATED-DESIGNED BY | CHECKED BY

FUNCTIONAL SUPERVISOR

STATE OF CALIFORNIA - DEPARTMENT OF TRANSPORTATION

Caltrans

RELATIVE BORDER SCALE 0 1 2 3 | USERNAME => c139257

LAST REVISION | DATE PLOTTED => 22 JUN 2017

EXHIBIT 2-A

Quality Manual Template

This exhibit is posted as a standalone file.

EXHIBIT 2-B

Notice of Materials to Be Used Form (CEM – 3101DB)

STATE OF CALIFORNIA * DEPARTMENT OF TRANSPORTATION

NOTICE OF MATERIALS TO BE USED FOR DESIGN-BUILD

CEM-3101DB (REV 03/2012) CT#7541-3511-1-DB

ADA Notice

For individuals with sensory disabilities this document is available in alternate formats. For information call (916) 654-6410 or TDD (916) 654-3880 or write Records and Forms Management, 1120 N Street, MS-89, Sacramento, Ca 95814

To (Resident Engineer): _____ Date: _____

You are hereby notified that materials required for use under Contract No. (1) _____

Dist._____ Co. _____ Rte. _____ P.M. _____

will be obtained from the following sources:

Item Category (2)	Item Code (3)	Item Description (4)	Item Component (5)	Item Sub Component (5)	Manufacturer/Provider Names(s) and Address(es) (6)

It is requested that you arrange for sampling, testing and inspection of materials prior to delivery in accordance with Section 6 of the Standard Specifications. It is understood that source inspection does not relieve the design builder of the full responsibility for incorporating into the work, materials that comply in all respects with the contract plans and specifications. Nor does it preclude the subsequent rejection of materials found to be unsuitable.

Yours Truly,

Contractor:		
Address:		
Business Phone:	Business Fax:	E-Mail:

(7) Materials Administrator, Mail Station #5
Materials Engineering & Testing Services
5900 Folsom Blvd, Sacramento, CA 95819
Fax: (916) 227-7084

Construction Senior Engineer

Design-Builder File

District Construction Office

EXHIBIT 2-C

Inspection Request Form (TL – 38DB)

CALTRANS
OFFICE OF STRUCTURAL MATERIALS
<<SELECT STREET ADDRESS>>
<<SELECT CITY, STATE, ZIP>>

PHONE: <<SELECT PHONE #>> **FAX: <<SELECT FAX #>>**

SCHEDULED DATE: _____ **INSPECTOR ASSIGNED:** _____

OR ☐ **MATERIAL WILL NOT BE INSPECTED AT THE SOURCE AT THIS TIME**

CONFIRMED BY:

This section is for METS LAB use only

INSPECTION REQUEST FOR DESIGN-BUILD

NUMBER OF PAGES INCLUDING COVER PAGE: (_____)

CONTRACT NO: _____ **INSPECTION DATE REQUESTED:** _____

(EA – XX-XXXXXX)

Requests must be received at least 2 business days prior to the inspection date requested. One week notice is required locations outside the State of California.

MATERIALS OR ACTIVITIES TO BE INSPECTED:

ITEM CATEGORY	MATERIAL DESCRIPTION	QUANTITY TO BE INSPECTED

☐ **WELDING** (Shop / Field) ☐ **PROCEDURE/QUALIFICATION TEST** ☐ **CONCRETE**

Please circle.

☐ **OTHER** _____

COMMENTS: _____

COMPANY NAME: _____ **E-MAIL:** _____

PHONE: ( ) _____ **FAX: ( ) _____**

ADDRESS / CITY / ZIP CODE: _____

PERSON REQUESTING INSPECTION: _____

PERSON TO CONTACT ON SITE: _____ **PHONE: ( )** _____

Note: Inspection will only be done at the location where the material is located. All appropriate documents should be readily available for our inspector to verify. Be aware that any other material not listed on the inspection form will not be inspected without prior confirmation. We expect to be able to confirm your inspection date on the next business day following receipt of this form. Please notify this office of all changes to your schedule at least 24 hours prior to the scheduled inspection date. Incomplete or incorrectly filled out forms will delay the inspection process. Be advised that due to the unpredictable nature of inspections, OSM staff will not schedule appointments for a specific time of day. Inspections of material in production may occur at any time. Please remember to provide safe access to all material requiring inspection. A copy of this form can be obtained from Caltrans Structural Material Representative (SMR) for the project.

EXHIBIT 2-D

Source Inspection Material Control Process

Exhibit 2-D
Source Inspection Material Control Process
Quality Assurance Inspection Process

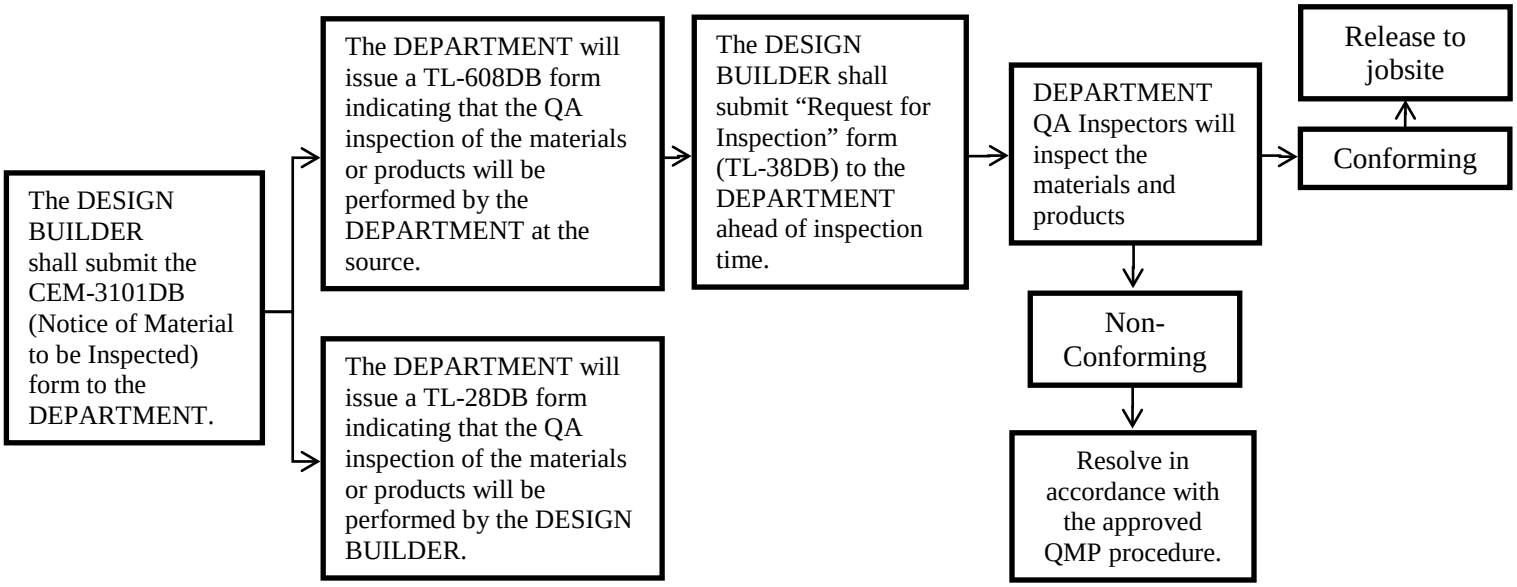

EXHIBIT 4-A

Project Document Environmental Commitments Record

Date: (4/25 /2013 CE/CE)
Project Phase:
☐ PA/ED (*DED/FED*)
☐ PS&E Submittal
☒ Construction

ENVIRONMENTAL COMMITMENTS RECORD
I-15 Cajon Pass Rehabilitation

The proposed project consists of replacing the outermost two lanes north and southbound, perfuming slab replacement of deteriorated pavement within interior lanes, and construction rumble strips on the inside and outside shoulders on route 15 in San Bernardino County. The construction limits of the project are PM R 15.2/R30.8

08-SBd-15
PM R15.2/ R30.8
EA 08-0Q740
PN 0800020456

Avoidance, Minimization, and/or Mitigation Measures	Page # in Env. Doc.	Environmental Analysis Source (Technical Study, Environmental Document, and/or Technical Discipline)	Responsible for Development and/or Implementation of Measure	Timing/ Phase	If applicable, corresponding construction provision: (standard, special, non-standard)	Action(s) Taken to Implement Measure	Measure Completed (Date and Initials)		Remarks	Environmental Compliance	
										YES	NO
CR-1: If cultural materials are discovered during construction, all earth-moving activity within and around the immediate discovery area will be diverted until a qualified archaeologist can assess the nature and significance of the find.		CE/CE	Design Builder	During Design Build	2010 Standard Specifications: 14-2.02A Archeological Resources: General.						
CR-2: If human remains are discovered, State Health and Safety Code Section 7050.5 states that further disturbances and activities shall cease in any area or nearby area suspected to overlie remains, and the County Coroner contacted.		CE/CE	Design Builder	During Design Build	2010 Standard Specifications:. Health & Safety Code 7050.5 & Public Resource Code 5097						

Date: (4/25 /2013 CE/CE)
Project Phase:
☐ PA/ED (*DED/FED*)
☐ PS&E Submittal
☒ Construction

ENVIRONMENTAL COMMITMENTS RECORD
I-15 Cajon Pass Rehabilitation

The proposed project consists of replacing the outermost two lanes north and southbound, perfuming slab replacement of deteriorated pavement within interior lanes, and construction rumble strips on the inside and outside shoulders on route 15 in San Bernardino County. The construction limits of the project are PM R 15.2/R30.8

08-SBd-15
PM R15.2/ R30.8
EA 08-0Q740
PN 0800020456

Avoidance, Minimization, and/or Mitigation Measures	Page # in Env. Doc.	Environmental Analysis Source (Technical Study, Environmental Document, and/or Technical Discipline)	Responsible for Development and/or Implementation of Measure	Timing/ Phase	If applicable, corresponding construction provision: (standard, special, non-standard)	Action(s) Taken to Implement Measure	Measure Completed (Date and Initials)		Remarks	Environmental Compliance	
										YES	NO
Pursuant to CA Public Resources Code (PRC) Section 5097.98, if the remains are thought to be Native American, the coroner will notify the Native American Heritage Commission (NAHC) who will then notify the Most Likely Descendent (MLD). At this time, the person who discovered the remains will contact Gabrielle Duff, District Environmental Branch Chief [(909)383-6933] or Gary Jones, District Native American Coordinator [(909)383-7505] so that they may work with the MLD on the respectful treatment and disposition of the remains. Further provisions of PRC 5097.98 are to be followed as										

Date: (4/25 /2013 CE/CE)
Project Phase:
☐ PA/ED (*DED/FED*)
☐ PS&E Submittal
☒ Construction

ENVIRONMENTAL COMMITMENTS RECORD
I-15 Cajon Pass Rehabilitation

The proposed project consists of replacing the outermost two lanes north and southbound, perfuming slab replacement of deteriorated pavement within interior lanes, and construction rumble strips on the inside and outside shoulders on route 15 in San Bernardino County. The construction limits of the project are PM R 15.2/R30.8

08-SBd-15
PM R15.2/ R30.8
EA 08-0Q740
PN 0800020456

Avoidance, Minimization, and/or Mitigation Measures	Page # in Env. Doc.	Environmental Analysis Source (Technical Study, Environmental Document, and/or Technical Discipline)	Responsible for Development and/or Implementation of Measure	Timing/ Phase	If applicable, corresponding construction provision: (standard, special, non-standard)	Action(s) Taken to Implement Measure	Measure Completed (Date and Initials)		Remarks	Environmental Compliance	
										YES	NO
applicable.											
Hazardous Waste/Materials											
HW-1 The District 8 Environmental engineering's hazardous waste prepared an initial site assessment (ISA) check list for his project. If the project will remove yellow or white traffic stripes and treated wood waste include one or more of the following standard special provisions (SSP's) in the PS&E package.	Pg 2	CE/CE	Design Builder	During Design Build	Special Provisions: 14-11.07 Remove yellow traffic stripe and pavement markings (hazardous waste) 15-2.02C (2) Remove traffic stripe and pavement marking containing lead.						
Air Quality											
AQ-1 Fugitive Dust Contractor must abide by Unless on all projects except those in Coachella		CE/CE	Design Builder	During Design Build	2010 Standard Specifications: 14-9.01/14-9.02.						

Date: (4/25 /2013 CE/CE)
Project Phase:
☐ PA/ED (*DED/FED*)
☐ PS&E Submittal
☒ Construction

ENVIRONMENTAL COMMITMENTS RECORD
I-15 Cajon Pass Rehabilitation
The proposed project consists of replacing the outermost two lanes north and southbound, perfuming slab replacement of deteriorated pavement within interior lanes, and construction rumble strips on the inside and outside shoulders on route 15 in San Bernardino County. The construction limits of the project are PM R 15.2/R30.8

08-SBd-15
PM R15.2/ R30.8
EA 08-0Q740
PN 0800020456

Avoidance, Minimization, and/or Mitigation Measures	Page # in Env. Doc.	Environmental Analysis Source (Technical Study, Environmental Document, and/or Technical Discipline)	Responsible for Development and/or Implementation of Measure	Timing/ Phase	If applicable, corresponding construction provision: (standard, special, non-standard)	Action(s) Taken to Implement Measure	Measure Completed (Date and Initials)		Remarks	Environmental Compliance	
										YES	NO
Valley or Mojave Basin SCAQMD Rule 403 Use on all projects in the Coachella Valley SCAD MD Rule 403.1 Use for projects in the Mojave Basin MDAQMD Rule 403. 2											
Biological Resources											
BIO-1 Water Pollution Control: To ensure the protection of drainages and jurisdictional waters along the highway, a Storm Water Pollution Control Plan (SWPPP) will be developed by the Contractor. Section 13 of the Standard Specifications (Water Pollution Control)	P11	NES (MI)	Design Builder	During Design Build	2010 Standard Specifications:						

Date: (4/25 /2013 CE/CE)
Project Phase:
☐ PA/ED (*DED/FED*)
☐ PS&E Submittal
☒ Construction

ENVIRONMENTAL COMMITMENTS RECORD
I-15 Cajon Pass Rehabilitation

The proposed project consists of replacing the outermost two lanes north and southbound, perfuming slab replacement of deteriorated pavement within interior lanes, and construction rumble strips on the inside and outside shoulders on route 15 in San Bernardino County. The construction limits of the project are PM R 15.2/R30.8

08-SBd-15
PM R15.2/ R30.8
EA 08-0Q740
PN 0800020456

Avoidance, Minimization, and/or Mitigation Measures	Page # in Env. Doc.	Environmental Analysis Source (Technical Study, Environmental Document, and/or Technical Discipline)	Responsible for Development and/or Implementation of Measure	Timing/ Phase	If applicable, corresponding construction provision: (standard, special, non-standard)	Action(s) Taken to Implement Measure	Measure Completed (Date and Initials)		Remarks	Environmental Compliance	
										YES	NO
shall be followed by the Contractor and enforced by the Resident Engineer.											
BIO-2 Species Protection: All highway improvements shall be confined to the paved prism of the roadway; thus no disturbance will occur to the unpaved shoulder. All construction-related activities by contractors, subcontractors, or their agents and equipment (including equipment staging, materials storage, and personnel parking areas) will be restricted to the designated limits of construction and staging areas (median of I-15).	P11	NES (MI)	Design Builder	During Design Build	2010 Standard Specifications:						

Date: (4/25 /2013 CE/CE)
Project Phase:
☐ PA/ED (*DED/FED*)
☐ PS&E Submittal
☒ Construction

ENVIRONMENTAL COMMITMENTS RECORD
I-15 Cajon Pass Rehabilitation

The proposed project consists of replacing the outermost two lanes north and southbound, perfuming slab replacement of deteriorated pavement within interior lanes, and construction rumble strips on the inside and outside shoulders on route 15 in San Bernardino County. The construction limits of the project are PM R 15.2/R30.8

08-SBd-15
PM R15.2/ R30.8
EA 08-0Q740
PN 0800020456

Avoidance, Minimization, and/or Mitigation Measures	Page # in Env. Doc.	Environmental Analysis Source (Technical Study, Environmental Document, and/or Technical Discipline)	Responsible for Development and/or Implementation of Measure	Timing/ Phase	If applicable, corresponding construction provision: (standard, special, non-standard)	Action(s) Taken to Implement Measure	Measure Completed (Date and Initials)		Remarks	Environmental Compliance	
										YES	NO
Bio-3 Species Protection To prevent habitat degradation, dust shall be controlled and all excess materials, debris, and trash shall be controlled on site and removed.	P11	NES (MI)	Design Builder	During Design Build							
NO PERMITS ARE REQUIRED FOR THIS PROJECT. (IE. 401, 404 OR 1602)		CE/CE	Design Builder	During Design Build							

Date: (4/25 /2013 CE/CE)
Project Phase:
☐ PA/ED (*DED/FED*)
☐ PS&E Submittal
☒ Construction

ENVIRONMENTAL COMMITMENTS RECORD
I-15 Cajon Pass Rehabilitation

The proposed project consists of replacing the outermost two lanes north and southbound, perfuming slab replacement of deteriorated pavement within interior lanes, and construction rumble strips on the inside and outside shoulders on route 15 in San Bernardino County. The construction limits of the project are PM R 15.2/R30.8

08-SBd-15
PM R15.2/ R30.8
EA 08-0Q740
PN 0800020456

Avoidance, Minimization, and/or Mitigation Measures	Page # in Env. Doc.	Environmental Analysis Source (Technical Study, Environmental Document, and/or Technical Discipline)	Responsible for Development and/or Implementation of Measure	Timing/ Phase	If applicable, corresponding construction provision: (standard, special, non-standard)	Action(s) Taken to Implement Measure	Measure Completed (Date and Initials)		Remarks	Environmental Compliance	
										YES	NO

EXHIBIT 4-B

Categorical Exemption/Categorical Exclusion Determination Form

EXHIBIT 4-B

CATEGORICAL EXEMPTION/CATEGORICAL EXCLUSION DETERMINATION FORM

08-SBd-15	R15.2- R30.8	0Q740 0800020456	120806
Dist.-Co.-Rte. (or Local Agency)	P.M/P.M.	E.A. (State project) /Project No.	Federal-Aid Project No. (Local project)/ Proj. No.

PROJECT DESCRIPTION:
(Briefly describe project, purpose, location, limits, right-of-way requirements, and activities involved in this box. *Use Continuation Sheet, if necessary)*

The proposed project consists of replacing the outermost two lanes north and southbound, performing slab replacement of deteriorated Pavement within interior lanes, and construction rumble strips on the inside and outside shoulders on route 15 in San Bernardino County. The construction limits of the project are PM R15.2/R30.8.

CEQA COMPLIANCE *(for State Projects only)*

Based on an examination of this proposal, supporting information, and the following statements (See 14 CCR 15300 et seq.):

- If this project falls within exempt class 3, 4, 5, 6 or 11, it does not impact an environmental resource of hazardous or critical concern where designated, precisely mapped and officially adopted pursuant to law.
- There will not be a significant cumulative effect by this project and successive projects of the same type in the same place, over time.
- There is not a reasonable possibility that the project will have a significant effect on the environment due to unusual circumstances.
- This project does not damage a scenic resource within an officially designated state scenic highway.
- This project is not located on a site included on any list compiled pursuant to Govt. Code § 65962.5 ("Cortese List").
- This project does not cause a substantial adverse change in the significance of a historical resource.

CALTRANS CEQA DETERMINATION (Check one)

☐ **Exempt by Statute.** (PRC 21080[b]; 14 CCR 15260 et seq.)

Based on an examination of this proposal, supporting information, and the above statements, the project is:

☒ **Categorically Exempt. Class** 1. (PRC 21084; 14 CCR 15300 et seq.)

☐ **Categorically Exempt. General Rule exemption.** [This project does not fall within an exempt class, but it can be seen with certainty that there is no possibility that the activity may have a significant effect on the environment (CCR 15061[b][3])

Kurt Heidelberg		Bryce Johnston	
Print Name: Environmental Branch Chief		Print Name: Project Manager/DLA Engineer	
Signature	12/17/12 Date	Signature	12-17-12 Date

NEPA COMPLIANCE

In accordance with 23 CFR 771.117, and based on an examination of this proposal and supporting information, the State has determined that this project:

- does not individually or cumulatively have a significant impact on the environment as defined by NEPA and is excluded from the requirements to prepare an Environmental Assessment (EA) or Environmental Impact Statement (EIS), and
- has considered unusual circumstances pursuant to 23 CFR 771.117(b) (http://www.fhwa.dot.gov/hep/23cfr771.htm - sec.771.117).

In non-attainment or maintenance areas for Federal air quality standards, the project is either exempt from all conformity requirements, or conformity analysis has been completed pursuant to 42 USC 7506(c) and40 CFR 93.126, 40 CFR 93.127, 40 CFR 93.128.

CALTRANS NEPA DETERMINATION (Check one)

☒ **23 USC 326:** The State has been assigned, and hereby certifies that it has carried out, the responsibility to make this determination pursuant to Chapter 3 of Title 23, United States Code, Section 326 and a Memorandum of Understanding (MOU) dated June 7, 2010, executed between the FHWA and the State. The State has determined that the project is a Categorical Exclusion under:

- ☐ **23 CFR 771.117(c): activity (c)(___)**
- ☒ **23 CFR 771.117(d): activity (d)(_1__)**
- ☐ **Activity ___ listed in Appendix A of the MOU between FHWA and the State**

☐ **23 USC 327:** Based on an examination of this proposal and supporting information, the State has determined that the project is a CE under 23 USC 327.

Kurt Heidelberg		Bryce Johnston	
Print Name: Environmental Branch Chief		Print Name: Project Manager/DLA Engineer	
Signature	12/17/12 Date	Signature	12-17-12 Date

Date of Categorical Exclusion Checklist completion: Date of ECR or equivalent:

Briefly list environmental commitments on continuation sheet. Reference additional information, as appropriate (e.g., air quality studies, documentation of conformity exemption, FHWA conformity determination if 23 USC 327 project; §106 commitments; §4(f); §7 results; Wetlands Finding; Floodplain Finding; additional studies; and design conditions).

08-SBd-15	R15.2- R30.8	0Q740 0800020456	120806
Dist.-Co.-Rte. (or Local Agency)	P.M/P.M.	E.A. (State project) /Project No.	Federal-Aid Project No. (Local project)/ Proj. No.

Air Quality:

This project is exempt from all emissions analysis per Table 1 of the Carbon Monoxide (CO) Protocol (Table 2 of 40 CFR 93.126). Therefore, and Air quality report is not needed.

Biology:

A Natural Environmental Study (Minimal Impacts) (NES MI) was prepared for this project. No mitigation measures are required for this project as there is no impact to vegetation, animal, or habitat resources at the project sites.

Cultural :

The provisions of the Section 106 Programmatic Agreement, Executed January 1, 2004, and Attachment 2 have been applied to this project. This project falls under Class 1, "Pavement reconstruction, resurfacing, shoulder backing, or placement of seal coats" ; and class 14 , " Removal or replacement of roadway markings, such as painted stripes, raised pavement markers, thermoplastic tape, or raised bars, or installation of sensors in existing pavements."

In accordance with the Programmatic Agreement, this undertaking is determined to be a screened undertaking with no potential to affect historic properties. This memorandum documents compliance with the agreed-upon historic preservation procedures.

Noise:

This project is a Type III project per Traffic Noise analysis Protocol. It is exempt from Traffic noise analysis. Under 23 CFR 772.7, therefore a Noise study not needed.

Hazardous Waste:

This project considered low risk with no potential to effect the project area.

Including the following SSP in the PS&E package:

SSP 14-11.07 Remove Yellow Traffic Stripe and Pavement Marking Hazardous Waste

SSP 15-2.02C (2) Remove Traffic Stripes and Pavement Markings Containing Lead.

According to the project engineer excess soils would be generated from under the existing pavement, therefore, no aerially deposited lead (ADL) is expected to be encountered.

No permits are required for this project. Changes in the project description, planning, design, or construction will require further evaluation and written documentation from the district biologist in order to comply with State and Federal natural resource laws. There are no waters of the U.S. or State in the project area.

EXHIBIT 4-C

Area of Potential Effect Map

PM R15.20
MATCH LINE
CONSTRUCTION FOOTPRINT SHEET 1 OF 8

MATCH LINE
MATCH LINE
CONSTRUCTION FOOTPRINT SHEET 2 OF 8

MATCH LINE
MATCH LINE
CLEGHORN I/C
CONSTRUCTION FOOTPRINT SHEET 3 OF 8

MATCH LINE
MATCH LINE
CONSTRUCTION FOOTPRINT
SHEET 4 OF 8

MATCH LINE
MATCH LINE
MATCH LINE
CONSTRUCTION FOOTPRINT

MATCH LINE
MATCH LINE

MATCH LINE
MATCH LINE
CONSTRUCTION FOOTPRINT SHEET 7 OF 8

PM 30.8
CONSTRUCTION FOOTPRINT - SHEET 5 OF 8

EXHIBIT 11-A

Design Exception Process Flowchart

This exhibit is posted as a standalone file

EXHIBIT 11-A: DESIGN EXCEPTION PROCESS FLOWCHART

For NON-STANDARDS DESIGN FEATURES

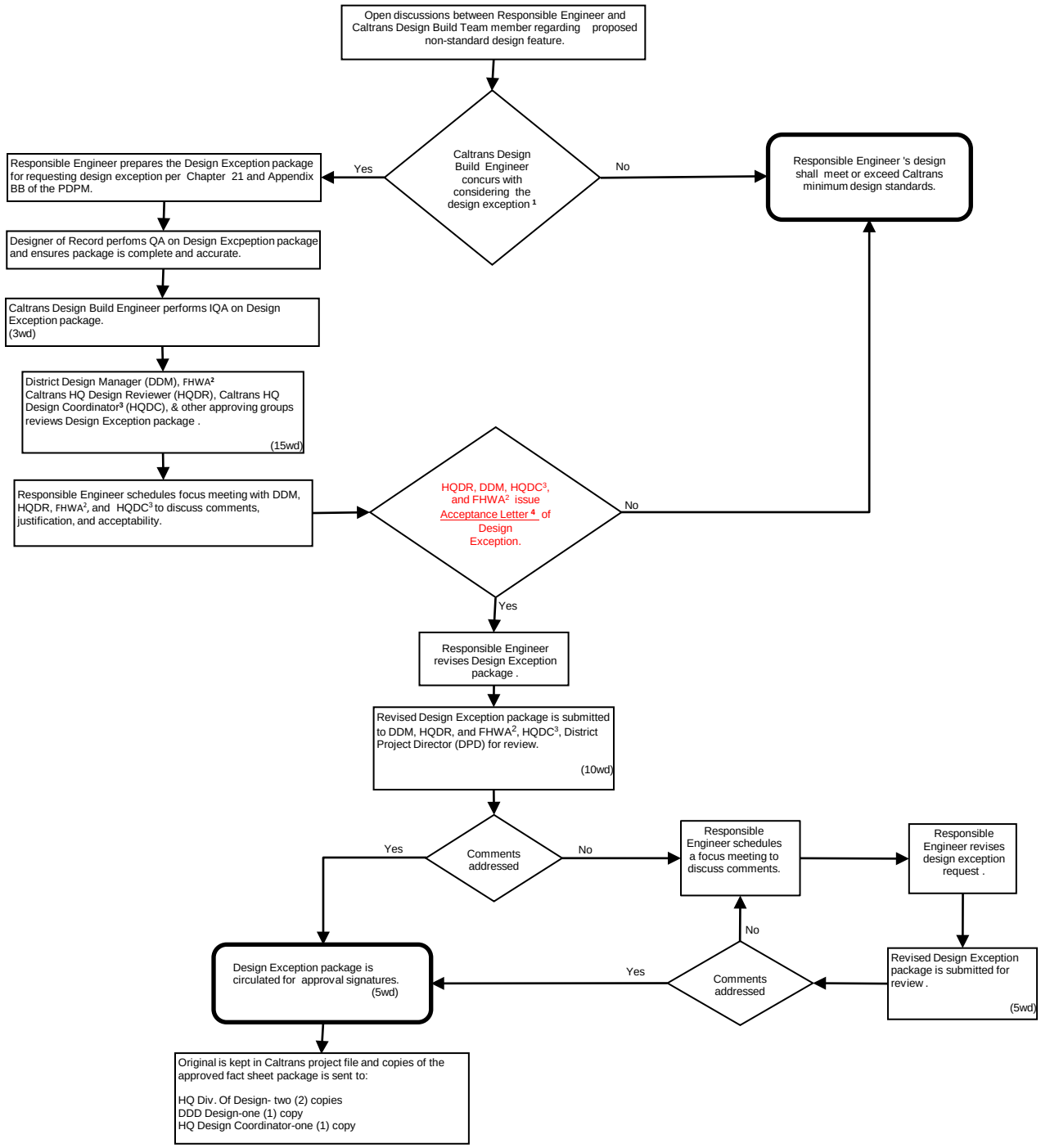

1 Concurrence to pursue with request for design exception DOES NOT GUARANTEE an acceptance will be issued. Design/Builder may continue to pursue design exception at their own risk.

2 FHWA review required only for design exceptions to the 13 controlling criteria (see Index 108.3 of the HDM) or if a vertical clearance of 16 feet over the Department of Defense Rural and Single Interstate Route system (see Section 309.2 of the HDM). Approximate review time is 30 workind days

3 Review & approval required for Mandatory and ADA design exceptions only.

4 Design Builder may implement the proposed non-standard feature as indicated in the design exception package and ensures that official approval will be granted following the formal review process. Final approval of design exception will be required prior to issuance of Acceptance of the Release for Construction Documents.

Note: Department does not control and therefore cannot guarantee the review times by third parties (i.e. FHWA).

EXHIBIT 11-B

Typical Cross-Sections

Exhibit 11-B Typical Cross-Sections

Dist	COUNTY	ROUTE	POST MILES TOTAL PROJECT	SHEET No.	TOTAL SHEETS

REGISTERED CIVIL ENGINEER DATE

PLANS APPROVAL DATE

REGISTERED PROFESSIONAL ENGINEER No. Exp. CIVIL STATE OF CALIFORNIA

THE STATE OF CALIFORNIA OR ITS OFFICERS OR AGENTS SHALL NOT BE RESPONSIBLE FOR THE ACCURACY OR COMPLETENESS OF SCANNED COPIES OF THIS PLAN SHEET.

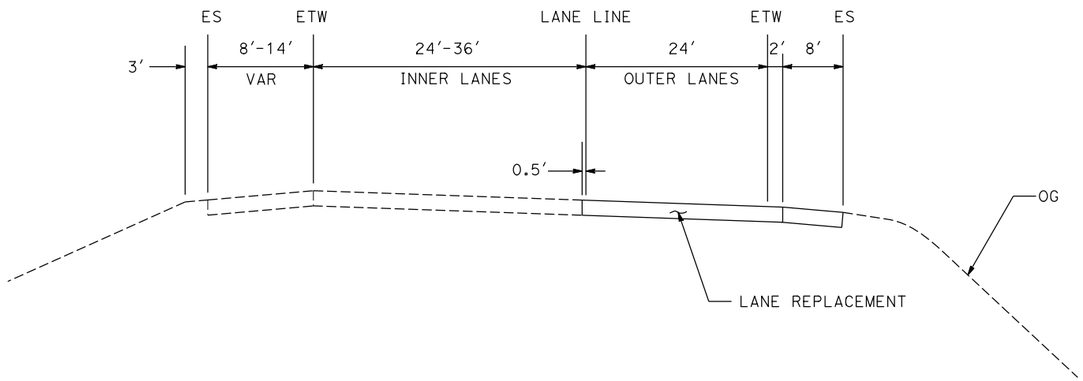

WHEN INNER LANES NOT TO BE REPLACED

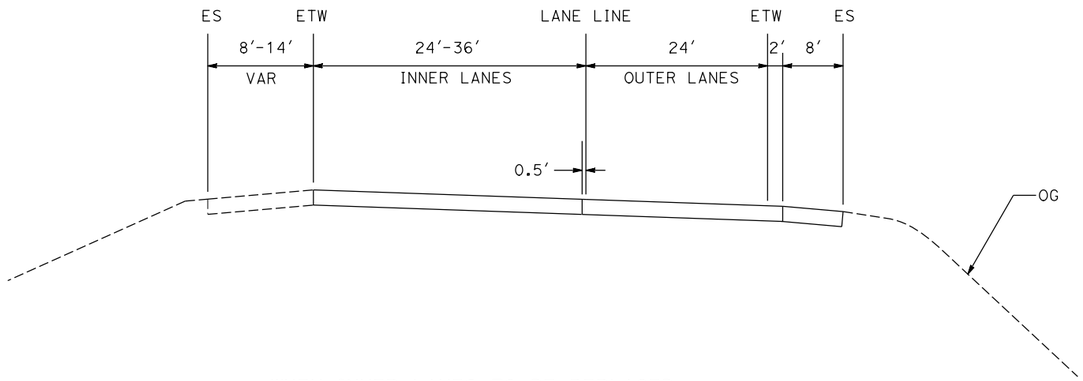

WHEN INNER LANES TO BE REPLACED

ROUTE 15

NOTES:

NB Shown, SB Similar.

TYPICAL CROSS SECTIONS

NO SCALE

STATE OF CALIFORNIA - DEPARTMENT OF TRANSPORTATION

Caltrans

FUNCTIONAL SUPERVISOR

CALCULATED-DESIGNED BY

CHECKED BY

REVISED BY

DATE REVISED

LAST REVISION | DATE PLOTTED = [illegible]

EXHIBIT 12-A

District 8 Drainage Report Submittal Guidance

State of California
DEPARTMENT OF TRANSPORTATION

Business, Transportation and Housing Agency

M e m o r a n d u m

Flex your power!
Be energy efficient!

To: HIGHWAY DRAINAGE DESIGNERS
(Caltrans and Consultants)

Date: July 1,2010

From: JOHN ROGERS
Office Chief, Hydraulics

Subject: District 8 Drainage Report Submittal Guidance

The following is intended to help clarify what is expected regarding drainage report submittals and when in the development process these submittals should be provided. This is not all-inclusive or a design aid. Drainage design guidance can be found in chapter 800 of the Highway Design Manual (HDM).

FLOODPLAIN ANALYSIS

Any floodplain involvement will need to be identified during PA&ED. Chapter 17 of the Standard Environmental Reference (SER) and section 804 of the HDM will provide guidance. Hydrology and hydraulic calculations relative to the Preliminary Drainage Report may need to be performed at this early stage in support of a Location Hydraulic Study.

PRELIMINARY DRAINAGE REPORT

Very early in the PS&E phase an offsite drainage analysis (Preliminary Drainage Report) is to be developed. Some things to consider at this stage are:

- How old are the existing culverts, are they showing any signs of failure? In order to satisfy section 803.3(1) of the HDM, all cross culverts within the project limits should have their inlets and outlets photographed, and the condition of the pipe material at these locations described (e.g. rebar showing for an RCP or perforations and rust for a CMP). This may require a little excavation with a shovel to expose

the invert in some cases. Any laterals coming from the median should also have their outlets checked.

A strong flashlight could be used to examine the culvert. Any noticeable deformations (e.g. sagging soffit or failing joints) should be noted.

The presence of standing water should be investigated and noted, as this tends to speed up the corrosion process.

Based on what is discovered at the inlet and outlet, a more detailed investigation may be warranted. A suspect culvert should be remotely videoed, and this may require the culvert to be cleaned. Consult with Caltrans regarding any remote video needs.

Special consideration should be provided to the larger culverts, as they present the greatest threat to safety.

Design Information Bulletin No. 83 provides guidance for any necessary culvert rehabilitation. Any culverts found to be unsuitable for rehabilitation will need to be replaced.

- Will the proposed project change historical flow patterns? Care must be taken with any increase or diversions of flow. Are adjacent or nearby property owners being unreasonably impacted?

- What design year storm should you analyze? Potential hydraulic upgrades to existing facilities should be discussed per sections 803.3 and 818.2 of the HDM. Field maintenance personnel should be consulted regarding any existing flooding problems. Design year determination for new roadways should follow sections 818.2 and 821.3 of the HDM.

FINAL DRAINAGE REPORT

This report will provide onsite (roadway) analysis and be added to the Preliminary Drainage Report data. This analysis is very sensitive to any changes to the design and therefore cannot be finalized prior to 100% PS&E. Roadway drainage should adhere to section 830 of the HDM. Some onsite roadway drainage items of particular concern are:

- Determining the time of concentration. Because the minimum time of concentration is 5 minutes, and that this value is a governing factor for most pavement drainage scenarios, we have developed an Excel spreadsheet "On-Drain" for ease of calculation and review. Please contact D8 Hydraulics at (909) 383 – 4555 or 6059 for an electronic copy.

- Most existing inlet spacing was based on a minimum time of concentration of 10 minutes. This spacing may no longer be adequate, particularly with inside widening that eliminates median (valley) drainage.

- Consideration of steeper cross slopes should be given to outside widening per section 833.2 of the HDM.

- Allowable design water spread should follow table 831.3 of the HDM. Consideration must also be given to the height of dike, as overtopping may be the governing factor.

- The proposed use of scuppered barrier or slotted pipe should be discussed with the Hydraulic Unit early in the design process. Their use is limited and maintenance can be difficult.

GENERAL

The Final Drainage Report should incorporate the following qualities:

- It should be easy to understand and follow. There must be a narrative that describes the existing condition and what effect the proposed improvements will have on these existing conditions. Pertinent information shall be summarized. Computer printout calculations support the narrative and should be well organized and only what is needed.

- Mapping is very important. Drainage boundaries should be clearly marked and preferably colored. Large offsite maps should be folded and placed in a pocket so they can be removed for reference. Existing features shall be dashed and/or faded with proposed features solid. Roadway stationing should be provided as well as labeling of local streets. Maps should be of a scale that allows the reviewer to clearly read all labeling, follow all flow paths and distinguish all boundaries. Design layout sheets are typically used for onsite drainage mapping.

Once again, the preceding information is provided for guidance with transportation related drainage submittals to District 8 and is not a blueprint on how to compile a drainage report. Highway projects vary in scope and complexity and so will drainage reports. It is assumed that the report will have a proper format, one that has a table of contents and is clearly and logically organized and one that contains the professional stamp of the responsible engineer. Adherence to this guidance will help in the production of a quality document and help to insure a quick review turn around.

Please provide an electronic .pdf copy once final report has been approved.

EXHIBIT 12-B

District 8 Drainage Report Format

District 08

PRELIMINARY / FINAL DRAINAGE REPORT FORMAT

Preliminary Drainage Report should be completed with PR, PSR, & PSSR
Final Drainage Report shall be completed with 95% PS&E

Note: for less complex projects the report may be a title and summary on one page

TITLE PAGE

- Co – Rte – PM
- Project Description, EA, Date
- Signature of Engineer in responsible charge

LOCATION MAP

TABLE OF CONTENTS

INTRODUCTION

- A brief statement of the type of improvement proposed

SUMMARY

- A general discussion of the scope of the drainage work on the project including but not limited to:
  - Any waterways within the project limits and their associated floodplains
  - Status of historical drainage issues
  - Hydrology and basin characteristics
  - Rainfall to be used
  - Drainage patterns that have been changed
  - Methodologies used in computing runoff
  - Storm water and erosion control strategies
  - Problems of debris, sedimentation, scour, and bank protection
  - Future facilities and development – how will they affect runoff?
  - Condition of existing facilities
  - Effect of bedload on discharge in undeveloped areas
  - Groundwater
  - Local agency involvement? Flood control improvements? Is coordination necessary?
  - Unusual and special conditions – will drainage easements be needed
  - Reference data such as previous drainage reports and miscellaneous correspondence
  - Identify preliminary locations of bridges and give waterway and freeboard requirements

The following categories may or may not apply depending on the project situation:

ATTACHMENTS

- ***WATERSHED (Drainage) MAP(S)***
  - Contours
  - Delineated areas contributing to different inlets and/or crossdrains with C, A, and T_c
  - Points of concentration and outfalls
  - Soil characteristics (may be shown on a separate map)

- ***INTENSITY – DURATION – FREQUENCY CHART***
  - Based on San Bernardino or Riverside County Hydrology methodology

- ***PHOTOS***
  - Include photos of unusual conditions

- ***TABLE OF DESIGN FLOWS, VELOCITIES, AND DEPTHS***
  - Crossdrains: available headwater, headwater, Q, outlet velocity
  - Channels: Q, V, Depths

- ***TABLE OF INTERCEPTION, BYPASS, SPREAD***
  Request "On-Drain" spreadsheet

- ***HGL TABLE OR PROFILE FOR NETWORKS***

- ***DRAINAGE CALCULATIONS***
  - Careful attention should be paid in determining the correct return period to be used in all drainage calculations. Refer to the Highway Design Manual (6th edition) (HDM) topics 803.3 and 818.2 for existing facilities, and topics 818.2, 821.1, 821.3, 831.1, and 831.3 for proposed facilities.
  - Hydrology calculations shall be done in conformance with the HDM and either the SBCFCD Hydrology Manual or the RCFCWCD Hydrology Manual, as appropriate.
  - Hand and/or computer software (such as Haestad Methods, or CIVILDESIGN) calculations are both acceptable.
  - Inlet performance and shoulder hydraulic capacity calculations shall be performed using the procedures outlined in the FHWA publication "Hydraulic Engineering Circular No. 22" (obtain "On-Drain" spreadsheet from Hydraulic Unit to simplify). Culvert headwater shall be calculated using the procedures outlined in the FHWA publication "Hydraulic Design Series No. 5". The designer should refer to Chapter 800 of the HDM for procedures and/or Caltrans standards in designing other drainage features.
  - Calculations must be complete in providing and substantiating all data and assumptions used in calculating the resulting flow rates and/or hydrographs. All calculations must accurately model the appropriate conditions that are the contributing factors.
  - All proposed pipes and channels shall be shown in profile with the hydraulic grade line, energy grade line, design peak flow rate, and design return period shown on the plans. A sufficient reach of existing facilities (to which proposed facilities will be connected) must be shown that would accurately depict their adequacy.
  - All drainage calculations (hand calculations and computer runs) are to be considered "backup" material to accompany the drainage report. The "backup" material of the drainage report must not be confused for or considered to be a substitute for the summary, tables, charts, maps, photos, etc. It will be unacceptable if this office has to search through the calculations to determine the intent of the engineer.

The above material shall be bound and a copy sent to the Office of Hydraulics for review. One copy of the final report will be kept on file in the Office of Hydraulics and another will be kept with the project file. An electronic. pdf copy is also requested for submittal once the report is approved.

EXHIBIT 14-A

Pesticides

EXHIBIT 14 - B: PESTICIDES

Pesticides used to control weeds shall conform to the provisions in Section 20-4.026, "Pesticides," of the Standard Specifications. Except as otherwise provided in these special provisions, pesticide use shall be limited to the following materials:

Cacodylic Acid
Diquat
Fluazifop-butyl
Glyphosate
Isoxaben (Preemergent)
Sethoxydim
Oxadiazon - 50 percent WP (Preemergent)
Oryzalin (Preemergent)
Pendimethalin (Preemergent)
Prodiamine (Preemergent)
Trifluralin (Preemergent)
Ammonium Sulfate
Magnesium Chloride
Melfluidide (Growth regulator)
Napropamide (Preemergent)

Granular preemergents may be used when applied to areas that will be covered with mulch, excluding plant basins. Granular preemergents shall be limited to the following materials:

Dichlobenil (Preemergent)
Oxadiazon (Preemergent)

Granular preemergents shall be applied prior to the application of mulch. Mulch applications shall be completed in these areas on the same working day. Photosensitive dye will not be required.

Glyphosate shall be used to kill stolon type weeds.

Oxadiazon shall be of the emulsifiable concentration or wettable powder type, except when Oxadiazon is used under mulch in conformance with these special provisions.

Prior to the application of preemergents, ground cover plants shall have been planted a minimum of 3 days and shall have been thoroughly watered.

A minimum of 100 days shall elapse between applications of preemergents.

Except for ground cover plants, preemergents shall not be applied within 18 inches of plants or within seeding areas.

Growth regulators shall not be applied within 6 feet of trees, shrubs or vines.

Ammonium sulfate and magnesium chloride shall be used only in areas planted to Carpobrotus or Delosperma. Ammonium sulfate and magnesium chloride shall not be applied in a manner that allows the pesticides to come in contact with trees or shrubs.

If the Contractor elects to request the use of other pesticides on this project, the request shall be submitted, in writing, to the Engineer not less than 15 days prior to the intended use of the other pesticides. Except for the pesticides listed in these special provisions, no pesticides shall be used or applied without prior written approval of the Engineer.

Pesticides shall not be applied within the limits of the plant basins. Pesticides shall not be applied in a manner that allows the pesticides to come in contact with the foliage and woody parts of the plants.

EXHIBIT 16-A

Special Design Submittal Form

Exhibit 16-A
Special Design Submittal Form

Request for services from the Engineering Service Center
Special Designs Branch A
SIGNS AND OVERHEAD STRUCTURES

Type of Service Design ☐ Permit Review ☐ Oversight ☐ CCO

Project Location

District __ City __ Rte ____ PM _____ **EA**_____ **Permit No**._____

Structure Type or System (Check Appropriate Line)

Traffic Operations		Non-Standard Structures		Other	
MVDS	___	Truss	___	Bridge Mounted	___
VDS	___	Tubular	___	Rail/Wall Mounted	___
CCTV(HM)	___	Light Weight	___	Traffic Signals	___
HAR	___	Special Design	___	Lighting	___

Description of Request:

Remov_____

_____

Field Review (List attendees, date of review, and notes as appropriate):

_____

_____

Project Development Submittal List

1. Site layout sheets and cross sections where structure is located. ____
2. Elevation sketch drawings of structure. _
3. Location of proposed minimum vertical clearance. __
4. Description, size and weight of attachments. __

Reports and Background Information

1. Foundation Recommendations (Memo or Report Format) _____
2. Bridge Number for work on or near Bridge Structures. _____

3. Photographs (Needed for work on existing structures). _____

Proposed Project Schedule

Current Project Development Phase _

District PS and E Date ____

Request for Final Plans By __

Project Priority(Describe basis for priority and include relevant information)

_____

Notify and forward copy of request for services form to Engineering Service Center/Project Management Branch.

Signatures and Contacts **Phone #**

Project Engineer

_____ ____

Functional Unit Representatives

_____ ____

_____ ____

_____ _____

Project Manager

____ _____

Conditions and Use for Signed Project Plan Sheets

Final plan sheets are prepared in Electronic File Format ready for transfer to customer site (with District border). Signature is provided after final review by district and structures just prior to PS and E to Office Engineer. Completed and signed plan sheets shall be accompanied by Sign and Overhead Structures "Authorization For Use of Electronic Signature" form for each project. Completed and signed plan sheets shall not be revised or distributed for reuse on other projects without prior approval and electronic authorization to do so. Please refer to Signs and Overhead Structures for any updates.

EXHIBIT 16-B

Special Design Submittal Guidelines

Exhibit 16-B

Special Design Submittal Guidelines

Sign Structures

Review of sign structure submittals per the Plans Preparation Manual utilizing Caltrans Standard Plans, Special Provisions, and Standard Specifications will be 15 working days.

Non-standard sign structure submittals shall follow the specifications as provided in AASHTO Standard Specifications for Structural Supports for Highway Signs, Luminaries and Traffic Signals 5th Edition.

Review of non-standard sign structure submittals will be 45 working days.

Complete sign structure submittal consists of layouts with locations, sign detail sheets, quantities, calculations, and foundation verification as needed given soil conditions.

CMS Changeable Message Signs

Review of changeable message sign structure submittals utilizing Caltrans Standard Plans, Special Provisions, and Standard specifications will be 15 working days.

Non-standard sign structure submittals shall follow the specifications as provided in AASHTO Standard Specifications for Structural Supports for Highway Signs, Luminaries and Traffic Signals 5th Edition.

Review of non-standard sign structure submittals will be 45 working days.

Complete sign structure submittal consists of layouts with locations, sign detail sheets, quantities, calculations, and foundation recommendation.

Signals, Luminaries, & Traffic Items

Plan sets as provided in the Plans Prep Manual, review of signals, luminaries and traffic item submittals utilizing Caltrans Standard Plans, Special Provisions, and Standard specifications will be 15 working days.

Review of non-standard signals, luminaries, & traffic item submittals will be 45 working days.

Decorative Lighting Poles

Decorative lighting poles must be steel. Aluminum mast arms up to 4' will be allowed. Aluminum base covers will be acceptable.

Highway Advisory Radio (HAR)

Highway Advisory Radio (HAR) poles may be fiberglass provided supplemental specifications are provided.

Temporary Poles

Temporary Poles for electrical work shall comply with the specifications as provided in AASHTO Standard Specifications for Structural Supports for Highway Signs, Luminaries and Traffic Signals.

EXHIBIT 16-C

Pull Box Details

10-1.09 COPPER-THEFT PREVENTION

GENERAL

Summary

This work includes installing copper theft prevention devices in pull boxes and conduits.

Submittals

Submit an equipment and material list for each installation under Section 86-1.04, "Equipment List and Drawings," of the Standard Specifications. List must include factory-tested requirements for the fittings, screws, and fastener strengths.

Submit a Certificate of Compliance for each device's materials to the Engineer under Section 6-1.07, "Certificates of Compliance," of the Standard Specifications.

Quality Control and Assurance

At the end of the project, supply the Engineer with the specialty tools including bits, drivers, and wrenches required for installing and removing tamper resistant bolts and screws. You must not keep a duplicate of the specialty tools.

Warranty

Devices must have a written warranty against defects in materials and workmanship from the manufacturer for 1 year from the date of original shipment.

MATERIALS

General

The State will furnish pad locks. Notify the Engineer 15 days before use.

Pull Box Security

If a vandal-resistant insert is fitted inside the pull box or if a security lid or cover is affixed to a pull box with a tamper-resistant lock, the insert, lid, cover, and lock must be:

1. Made of corrosion resistant material
2. Easy to handle and install
3. Easy to remove by authorized staff

If tamper-resistant bolts or security screws are used, the size and length must be similar to the hold-down bolts shown and must be compatible to the pull box.

CONSTRUCTION

Pull Box Security

Method used must:

1. Be appropriate and compatible to the pull box type shown
2. Maintain:
   - 2.1. Materials associated with the pull box in tact
   - 2.2. Dimensions of the pull box
   - 2.3. Sufficient space for conduit and conductors inside the pull box
3. Lock the pull box
4. Resist unauthorized removal of wires from the pull box
5. Not interfere with ADA requirements

To make the pull box vandal resistant, you may replace or modify the pull box cover.

If the pull box cover is replaced, you must properly secure the replacement to the pull box to prevent unauthorized access.

11243

Exhibit 16-C: Pull Box Details

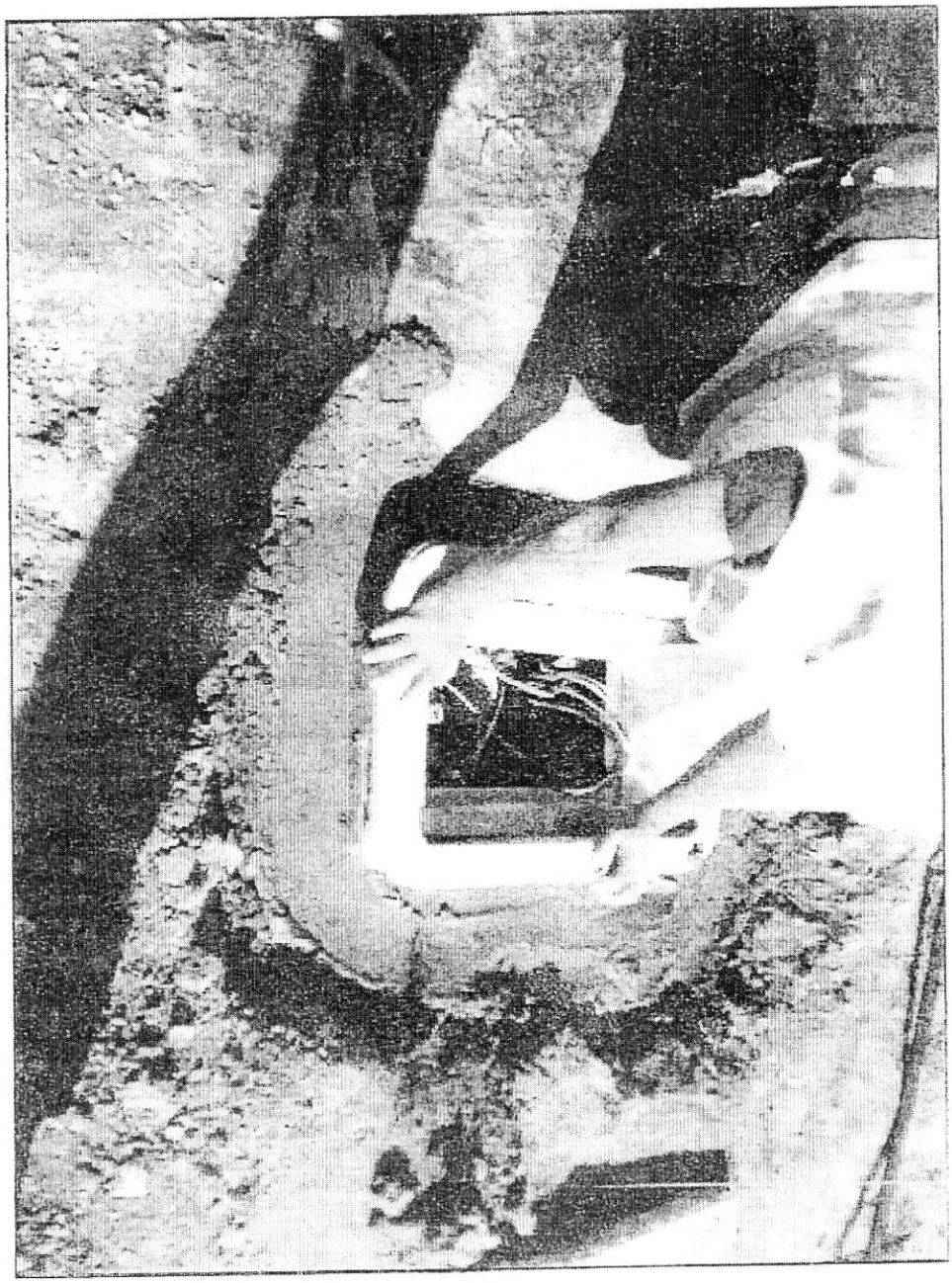

"The Lockable Insert"

Exhibit 16-C: Pull Box Details

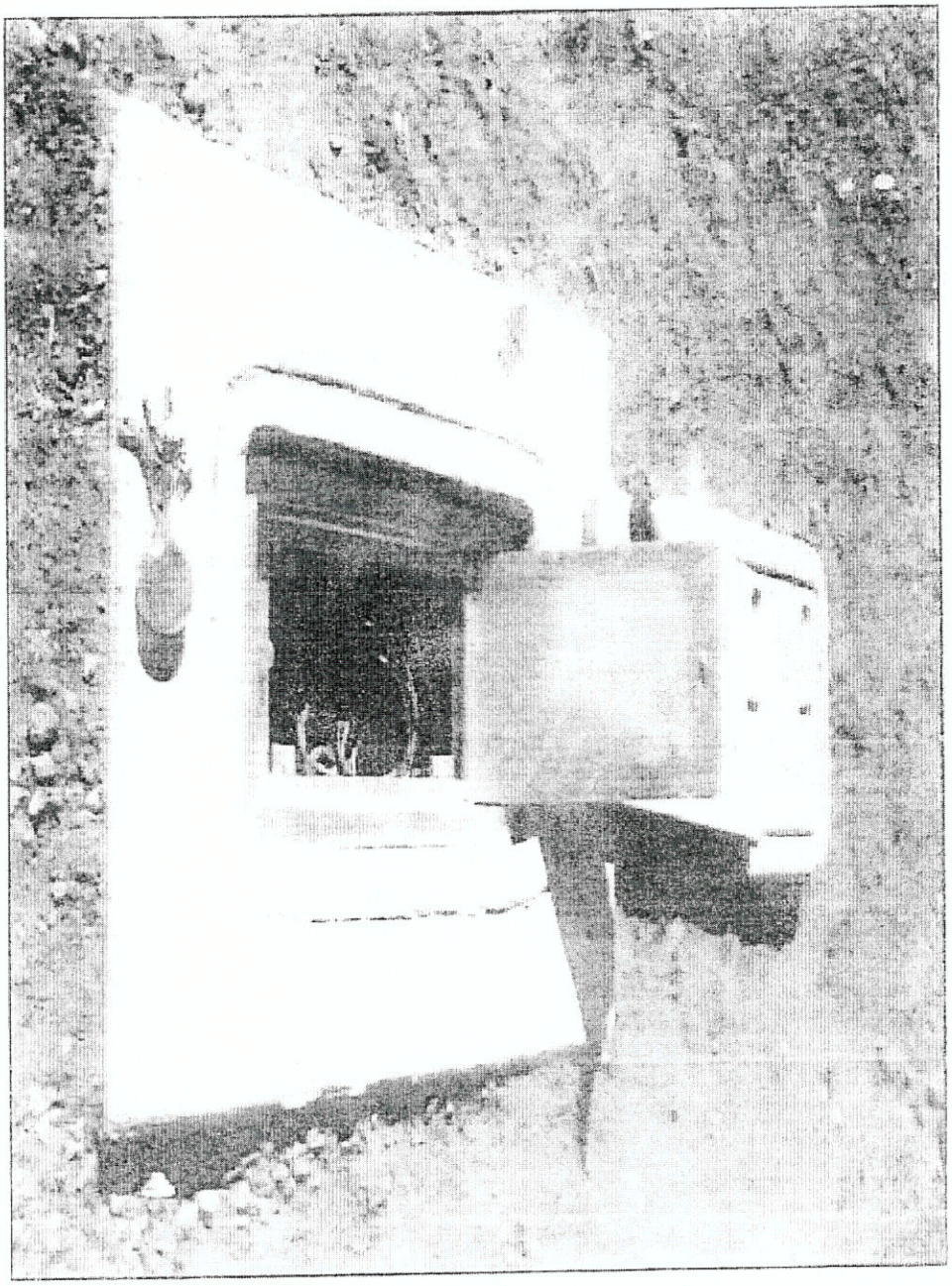

"The Lockable Insert"

Exhibit 16-C: Pull Box Details

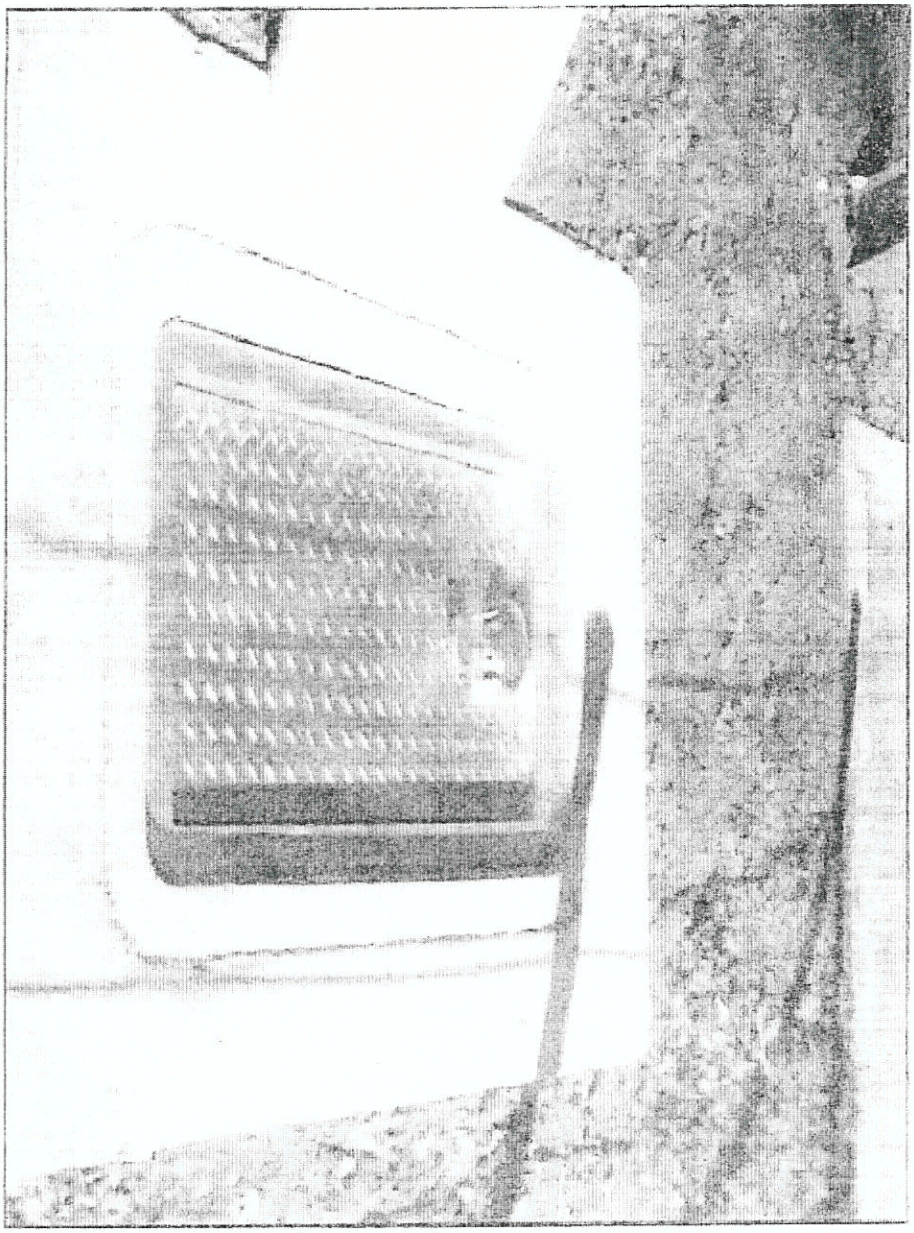

"The Lockable Insert"

Exhibit 16-C: Pull Box Details

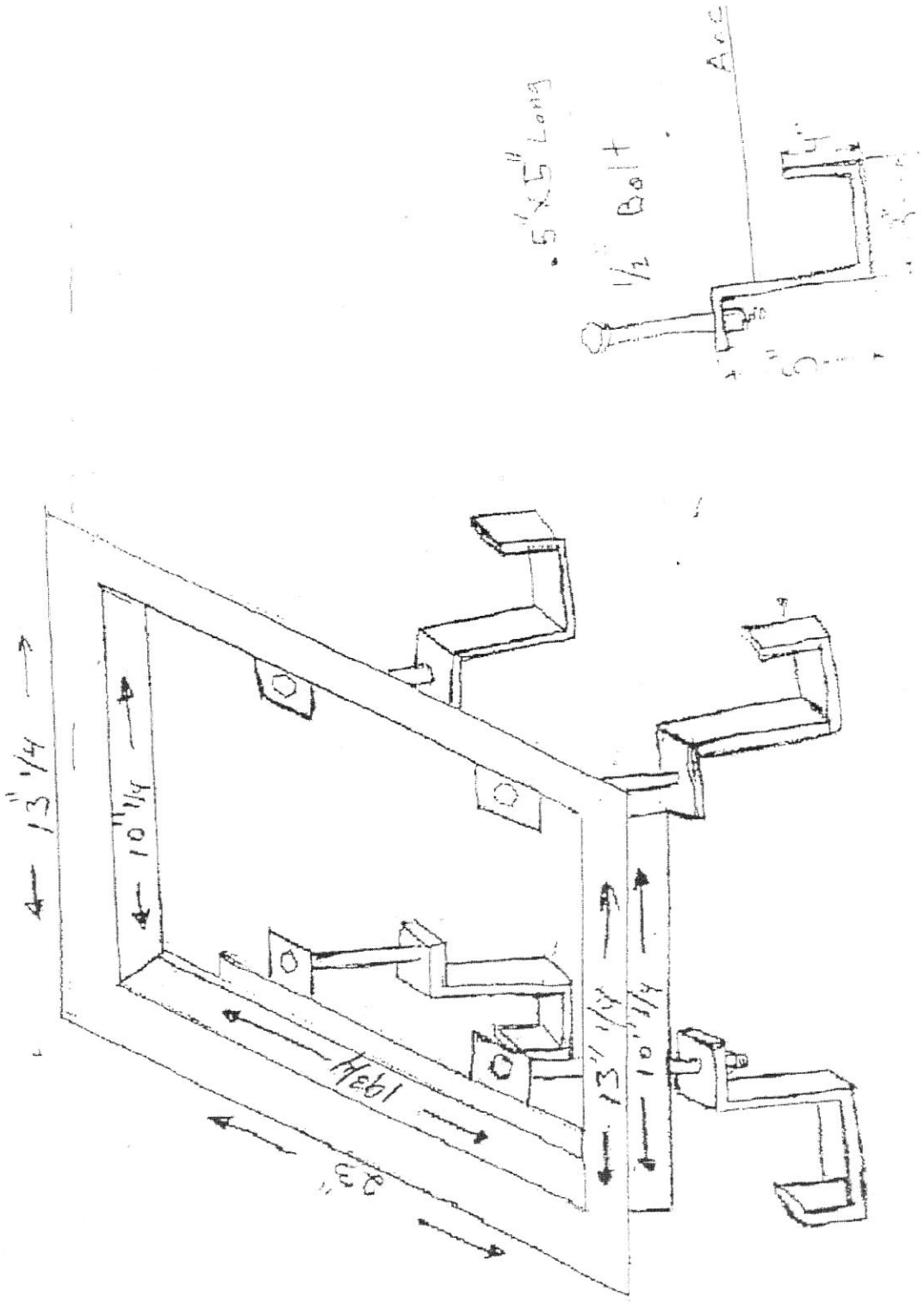

EXHIBIT 16-D

Sign Retro-Reflectivity Chart

Exhibit 16-D:

Basic Guide for Selection of Retroreflective ASTM Sheetings on State Highway Signs

		Glass Bead		Microprismatic				Protective Film	
	Luminance---->	Warm	Hot	Very Hot				Clear	
Category	Color Combo	Type II	Type III	Type IV	Type VII	Type VIII	Type IX	Standard	Premium
Guide	WHITE ON GREEN	DNU	NR	RS, OH	RS, OH	RS, OH	RS, OH	NR	X
Guide	WHITE ON BLUE	RS	RS	NR	NR	NR	NR	NR	X
Guide	WHITE ON BROWN	RS	RS	NR	NR	NR	NR	NR	X
Warning	BLACK ON YELLOW	DNU	RS	RS, OH	RS, OH	RS, OH	RS, OH	NR	X
Warning	(1) BLACK ON FYG	DNU / NA	RS / NA	RS	RS / NA	RS	RS	NR	X
Temporary	BLACK ON ORANGE	DNU	RS	RS	RS	RS	RS	X	X
Temporary	(2) BLACK ON FRO	DNU / NA	RS / NA	RS	RS	RS	RS / NA	X	X
Regulatory	BLACK ON WHITE	DNU	RS	RS, OH	RS, OH	RS, OH	RS, OH	X	X
Regulatory	WHITE ON RED	DNU	DNU	RS	RS	RS	RS	NR	X
Regulatory	(3) RED ON WHITE	RS	NR	NR	NR	NR	NR	X	NR
Regulatory	(3) GREEN ON WHITE	RS	NR	NR	NR	NR	NR	X	NR
Other	(4) NON-TCD SIGNS	RS	NR	NR	NR	NR	NR	X	NR

LEGEND:	FOOTNOTES:	NOTES:
RS = OK on roadside signs	(1) Optional for school zones and pedestrian crossings.	1. Glass bead white sheeting looks grayish in daylight.
OH = OK on overhead signs	(2) Optional -- Fluorescent orange is a color that appears brighter in daylight and twilight.	2. Use same "Type" for legend & background on same sign.
DNU = Do Not Use	(3) Parking type signs.	3. Black is non-reflective and does not have an ASTM designation.
NR = No Recommendation	(4) E.G., Adopt-A-Highway, Click It Or Ticket, Report Drunk Drivers, etc.	
NA = Not Available		
FYG = Fluorescent Yellow Green		
FRO = Fluorescent Orange or Fluorescent Red Orange		

EXHIBIT 16-E

Pictures of Existing Sign Panels to be Replaced

NB-SBD-015 Sign Replacement

NB-SBD-015 Sign Replacement

NB-SBD-015 Sign Replacement

NB-SBD-015 Sign Replacement

NB-SBD-015 Sign Replacement

NB-SBD-015 Sign Replacement

NB-SBD-015 Sign Replacement

SB-SBD-015 Sign Replacements

SB-SBD-015 Sign Replacements

SB-SBD-015 Sign Replacements

SB-SBD-015 Sign Replacements

SB-SBD-015 Sign Replacements

SB-SBD-015 Sign Replacements

SB-SBD-015 Sign Replacements

Exhibit 16-E Pictures of Existing Sign Panels to be Replaced (SB Signs)

SB-SBD-015 Sign Replacements

SB-SBD-015 Sign Replacements

Exhibit 16-E Pictures of Existing Sign Panels to be Replaced (SB Signs)

EXHIBIT 18-A

Lane Requirement Charts

EA#: 0Q7401
Chart no. 1
Freeway/Expressway Lane Requirements

County:San Bernardino	Route/Direction:15/NB	PM:R15.2/R21.123

Closure limits:

From hour to hour	24	1	2	3	4	5	6	7	8	9	10	11	12	13	14	15	16	17	18	19	20	21	22	23	24
Mondays	2	2	2	2	2																			2	2
Tuesdays through Thursdays	2	2	2	2	2																		2	2	2
Fridays	2	2	2	2	2																				
Saturdays	2	2	2	2	2	2	2																		2
Sundays	2	2	2	2	2	2	2																	2	2

Legend:

1	Provide at least 1 through freeway lane open in direction of travel
2	Provide at least 2 adjacent through freeway lanes open in direction of travel
	Work allowed within the highway where shoulder or lane closure is not required

REMARKS:

Date:4/24/2013 Developed by: John H. Lee Validity: 24 months

EA#: 0Q7401
Chart no. 2
Freeway/Expressway Lane Requirements

County:San Bernardino	Route/Direction:15/NB	PM:R21.123/30.8

Closure limits:

From hour to hour	24	1	2	3	4	5	6	7	8	9	10	11	12	13	14	15	16	17	18	19	20	21	22	23	24
Mondays through Thursdays	2	2	2	2	2	2																		2	2
Fridays	2	2	2	2	2	2																			
Saturdays	2	2	2	2	2	2	2																		2
Sundays	2	2	2	2	2	2	2																	2	2

Legend:

1	Provide at least 1 through freeway lane open in direction of travel
2	Provide at least 2 adjacent through freeway lanes open in direction of travel
	Work allowed within the highway where shoulder or lane closure is not required

REMARKS:

Date:4/24/2013 Developed by: John H. Lee Validity: 24 months

EA#: 0Q7401
Chart no. 3
Freeway/Expressway Lane Requirements

County:San Bernardino	Route/Direction:15/SB	PM:R15.2/30.8

Closure limits:

From hour to hour	24	1	2	3	4	5	6	7	8	9	10	11	12	13	14	15	16	17	18	19	20	21	22	23	24
Mondays through Thursdays	2	2	2	2																	2	2	2	2	
Fridays	2	2	2	2																			2	2	
Saturdays	2	2	2	2	2	2																			
Sundays																									

Legend:

1	Provide at least 1 through freeway lane open in direction of travel
2	Provide at least 2 adjacent through freeway lanes open in direction of travel
	Work allowed within the highway where shoulder or lane closure is not required

REMARKS:

Date:4/24/2013 Developed by: John H. Lee Validity: 24 months

EA#: 0Q7401
Chart no. 4
Freeway/Expressway Lane Requirements

County:San Bernardino	Route/Direction:15/NB	PM:R22.0/R28.7

Closure limits:

From hour to hour	24	1	2	3	4	5	6	7	8	9	10	11	12	13	14	15	16	17	18	19	20	21	22	23	24
Mondays	3	3	3	3	3																				
Fridays																							3	3	
Saturdays	3	3	3	3	3	3	3	3	3	3	3	3	3	3	3	3	3	3	3	3	3	3	3	3	
Sundays	3	3	3	3	3	3	3	3	3	3	3	3	3	3	3	3	3	3	3	3	3	3	3	3	

Legend:

3	Provide at least 3 adjacent through freeway lanes open in direction of travel
	Work allowed within the highway where shoulder or lane closure is not required

REMARKS: No more than 12 closures are allowed.

Date:4/24/2013 Developed by: John H. Lee Validity: 24 months

EA#: 0Q7401
Chart no. 5
Complete Connector Closure Hours/Connector Lane Requirements

County:San Bernardino	Route/Direction:15/NB	PM:R21.123 & R21.517

Closure limits: NB OFF TO RTE 138

From hour to hour	24	1	2	3	4	5	6	7	8	9	10	11	12	13	14	15	16	17	18	19	20	21	22	23	24
Mondays through Thursdays	C	C	C	C	C																	C	C	C	
Fridays	C	C	C	C	C																				
Saturdays	C	C	C	C	C	C	C																		C
Sundays	C	C	C	C	C	C	C																	C	C

Legend:

C	Connector may be closed completely
	Work allowed within the highway where shoulder or lane closure is not required

REMARKS:

Date:4/24/2013 Developed by: John H. Lee Validity: 24 months

EA#: 0Q7401
Chart no. 6
Complete Connector Closure Hours/Connector Lane Requirements

County:San Bernardino	Route/Direction:15/NB	PM:R21.517

Closure limits: NB ON FR RTE 138

From hour to hour	24	1	2	3	4	5	6	7	8	9	10	11	12	13	14	15	16	17	18	19	20	21	22	23	24
Mondays through Thursdays	C	C	C	C	C	C																	C	C	
Fridays	C	C	C	C	C	C																			
Saturdays	C	C	C	C	C	C	C																		C
Sundays	C	C	C	C	C	C	C																	C	C

Legend:

C	Connector may be closed completely
	Work allowed within the highway where shoulder or lane closure is not required

REMARKS:

Date:4/24/2013 Developed by: John H. Lee Validity: 24 months

EA#: 0Q7401
Chart no. 7
Complete Connector Closure Hours/Connector Lane Requirements

County:San Bernardino	Route/Direction:15/NB	PM:R21.284/R21.622

Closure limits: SB ON FR RTE 138 & SB OFF TO RTE 138

From hour to hour	24	1	2	3	4	5	6	7	8	9	10	11	12	13	14	15	16	17	18	19	20	21	22	23	24
Mondays through Thursdays	C	C	C	C																	C	C	C	C	
Fridays	C	C	C	C																			C	C	
Saturdays	C	C	C	C	C	C																			
Sundays																									

Legend:

C	Connector may be closed completely
	Work allowed within the highway where shoulder or lane closure is not required

REMARKS:

Date:4/24/2013 Developed by: John H. Lee Validity: 24 months

EA#: 0Q7401
Chart no. 8
Complete Ramp Closure Hours/Ramp Lane Requirements

County:San Bernardino	Route/Direction:15/NB	PM:R15.2/30.8

Closure limits:

From hour to hour	24	1	2	3	4	5	6	7	8	9	10	11	12	13	14	15	16	17	18	19	20	21	22	23	24
Mondays through Thursdays	C	C	C	C	C	C																C	C	C	
Fridays	C	C	C	C	C	C																			
Saturdays	C	C	C	C	C	C	C																	C	
Sundays	C	C	C	C	C	C	C																C	C	

Legend:

C	Ramp may be closed completely
	Work allowed within the highway where shoulder or lane closure is not required

REMARKS:

Date:4/24/2013 Developed by: John H. Lee Validity: 24 months

EA#: 0Q7401
Chart no. 9
Complete Ramp Closure Hours/Ramp Lane Requirements

County:San Bernardino	Route/Direction:15/SB	PM:R15.2/30.8

Closure limits:

From hour to hour	24	1	2	3	4	5	6	7	8	9	10	11	12	13	14	15	16	17	18	19	20	21	22	23	24
Mondays through Thursdays	C	C	C	C																	C	C	C	C	
Fridays	C	C	C	C																			C	C	
Saturdays	C	C	C	C	C	C																			
Sundays																									

Legend:

C	Ramp may be closed completely
	Work allowed within the highway where shoulder or lane closure is not required

REMARKS:

Date:4/24/2013 Developed by: John H. Lee Validity: 24 months

EXHIBIT 18-B

Lane Requirement Chart Request Form

Caltrans (District 08)

Lane Requirement Chart (LRC) Request (Updated on 2/4/2009)

To be submitted through e-mail

LRC Developer:

Following 2 cells are for DTM use.

Count station:

Truck % :

TYPE INFORMATION IN GREEN CELLS ONLY

A) Requester's information

Full name			**Department**		
phone No.		Floor & geo. Location:(e.g.: 10 NE) >>>>>	Date of request		
E-mail add.:			**Project's EA #**		
Name of the project manager of this job			Project manager's E-mail address		

B) Job description (See section "E" below)

Do not combine requests **(One request for each roadway or county)**

Job description			
Job ID (County/route)		Post mile (from-to). see PM log address below*	
Directions (Don't say both)		# of lns. existing **in each direc.**,** read note 2	
* For exact pm go to http://sv08web/databank & select county & type rte.		**Attach the location map to your E-mial**	
Name of the intersecting roads in the beginning and at the end (If any)			
Will any ramp/connec. be clsd?	**if yes** read note 1 below*	If any city street needs to be closed, read note 3 below ***	

Note1 *: If ramps or connectors are needed to be closed, click on the "ramp or connector info" tab below & complete the list

Note 2 **: If # of lanes change within the limits of the project, click on the "# of lanes" tab below & complete the list

Note 3 *:** If any city streets, or roads that are not under the jurisdiction of Caltrans, need to be closed, the requester must obtain the written approval of the closure from the corresponding local agency and provide it to the DTM, at the time of requesting the LRCs.

C) Project information (Consult with cons./Mntc., if assistance is needed)

Type: Cons/Mntc/Permits:		**LRC Developer**: Calculate the 10 minute delay damage	
What is the Ready To List **(RTL) date**?			
What is the **expected date** of **construction**?			
How many lanes are required to be closed in each direction to be able to perform the job?			
Which lanes will the job be performed on (If any)? Specify lane numbers (If all state "All")			
For 2 lanes or more roadways, are **any full directional closures** required? **If Yes,** give the # of times and the exact PM limits?			
Have extended weekend closures been considered? If yes how many?			
How many working days are needed for the job **to be completed** under normal conditions?			
What is the **minimum No. of hours** required **per shift** to do the job?			
Considering the traffic, what are the **best hours** to perform the job (0-24) if you know?			
Have major traffic **detours** been planned? If "**Yes**", **give % diversion & Attach the detour plan to your E-mail**			

If "**No**", What will be done with the traffic? Explain in section "E" below

D) Roadway information

Any K-rail installed? If yes, on which side?		K-rail will be placed between which PM's?	
What will be the lane width when k-railed?		Is **profile grade** level/rolling/mountaineous?*	
*: If the profile grades change within the postmile limits of the project, click on the "Profile grade" tab below & complete the list			
Width of outside shoulder in feet (if exists)?		Width of inside/median shoulder in feet(if exists)?	

Note: LRC's will be ready in 2-4 weeks, approximately.

E) Write any remarks, details of the job description or detour route in this section

E-mail the completed form to: al_afaneh@dot.ca.gov		Date request received by the DTM	

Only the form, was developed by Saleh Yadegari (2/3/09)

List of ramp/connector closures corresponding to the roadway closure

	EA Number	0			Request date	01/00/00	
	Job ID (County/rte)						
	Postmile (From-to) *	0.00					
	* For exact pm go to http://sv08web/databank & select county & type rte. #						
#	Direct. of connector or ramp (eb/wb/nb/sb)	Is it a connec., Onr/ofr?	PM prefix (If any)	Postmile	# of exist. Lns on the connec./ramp	# of ramp lns. To be closed	Type of work to be done	Remarks
1								
2								
3								
4								
5								
6								
7								
8								
9								
10								
11								
12								
13								
14								
15								
16								
17								
18								
19								
20								
21								
22								
23								
24								

Only the form, was developed by Saleh Yadegari (2/3/09)

List of # of existing lanes on the mainline

	EA Number		**0**	Request date	**01/00/00**
	ID (County/rte)				
	Postmile (from-to)			**0**	
#	Direction (eb/wb/nb/sb)	Pm (From)	Pm (To)	# of existing lanes	Remarks
1					
2					
3					
4					
5					
6					
7					
8					
9					
10					
11					
12					
13					
14					
15					

Only the form, was developed by Saleh Yadegari (2/3/09)

List of profile grades

	EA Number		0		Today's date	01/00/00	
	Job ID (county/rte)		0				
	Postmile (from-to)		0				
#	Direction (eb/wb/nb/sb)	Pm (From)	Pm (To)	Upward/level / downward?	% of profile grade	Level/rolling/ mountaineous	Remarks
1							
2							
3							
4							
5							
6							
7							
8							
9							
10							
11							
12							
13							
14							
15							

Only the form, was developed by Saleh Yadegari (2/3/09)

EXHIBIT 21-A

Joints, Terminals, and Bond Breaker Standards for Concrete Pavements

EXHIBIT 21-A

State of California
DEPARTMENT OF TRANSPORTATION

Business, Transportation and Housing Agency

Memorandum

Flex your power!
Be energy efficient!

To: **HECTOR DAVILA**
SYED RAZA

Date: April 19, 2013

From: **AMARJEET S. BENIPAL**
State Pavement Engineer

Subject: Joints, Terminals, and Bond Breaker Standards for Concrete Pavements for Contract #08-0Q7404

The attached guidance and standards has been provided for use on Contract #08-0Q7404 only. This information updates what is currently found in the Highway Design Manual regarding joint and bond breaker design for concrete pavements, particularly precast concrete and continuously reinforced concrete. This information that has been reviewed is currently being updated into the Highway Design Manual and should take precedent to what is currently in Chapter 620.

Attachments
c: Alex Daouk
Bryce Johnston
Ray Tritt
Bill Farnbach

622.3 Pavement Joints

(1) Construction. Construction joints (sometimes called contact or cold joint) are joints between slabs that result when concrete is placed at different times. Construction joints, formed before concrete is poured, can be transverse or longitudinal and are constructed in all types of concrete pavements. The joint is formed by placing a metal or wooden header board that is set perpendicular to the surface and at right angle to the centerline and it is of sufficient length and height so that it conforms to the cross section of the pavement.

For CRCP, construction joints allow for some paving break in the continuous concrete paving operation. On a subsequent paving day the joints are used to extend the pavement in-kind. Transverse construction joints typically include additional longitudinal reinforcement to keep random cracks from widening. Holes are drilled in the header board to provide placement and allowing the longitudinal reinforcing bars to pass through the header board. Do not engineer transverse construction joints closer than 1000 feet from each other.

For JPCP, construction joints occur at planned transverse joints and longitudinal joints. They are typically placed by the contractor to facilitate their paving operation. Details and instructions for how to place construction joints in JPCP are found in the Standard Plans and Specifications. Tie bars are typically used at longitudinal construction joints to connect the adjoining slabs together so that the construction joint will be tightly closed. Dowel bars are used at transverse construction joints to provide load transfer.

For PPCP, construction joints occur at each finish pavement segment constructed. A finished pavement is composed of a series of individual precast panels (joint panel, base panel and the central processing panels), that are post-tensioned together in the longitudinal direction after installation. The panels in the State standard design typically have tongue and groove keyways that are continuous along the transverse edges of the panels. Figure 621.1 shows the assembly layout for the three types of panel that make up one finished pavement for the post tensioned system. The construction joint in the precast pavement allows for the subsequent installation of the adjacent precast pavement. The keyways at the panel joints are there to make certain vertical alignment between panels as they are installed, and provide load transfer between panels prior to post tensioning.

(2) Contraction. Longitudinal and transverse contraction joints (also known as weakened plane joints) are sawed into new pavement to control the location and geometry of shrinkage, curling, and thermal cracking.

CRCP is constructed without transverse contraction joints. Transverse cracks are allowed to form but are held tightly together with continuous reinforcing steel for crack formation.

JPCP contains contraction joints that create a weakened line across the slab to control the location of the expected natural cracks. The concrete cracks at the contraction joints and not elsewhere in the slabs. The Standard plans show the typical spacing details for transverse contraction joints. For special situations, such as intersections, spacing layout will be needed. See HDM Index 626.3 for special consideration when engineering a rigid pavement intersection.

Contraction joints are not integral parts in the construction of tensioned PPCP.

(3) Isolation. Isolation joints are used to separate dissimilar pavements/structures in order to lessen compressive stresses that could cause excessive cracking. Examples of dissimilar pavements/structures include different joint patterns, different types of rigid pavement (e.g., CRCP/JPCP), building foundations, drainage inlets, drainage inlet depressions, manholes and manhole frame and cover. Isolation joints are filled with a joint filler material to keep cracks from

propagating through the joint and to prevent water/dirt infiltration. Isolation joints are most commonly placed along pavement longitudinal joints. Because of different arrangements for building foundations, drainage inlets, and drainage inlet depressions and utility frames and covers, isolation joints are necessary to provide isolation to relieve stresses in the abutting faces of dissimilar pavements/structures.

(4) Expansion. Expansion joints are similar in purpose to isolation joints except they are used where there is a need to allow for a large expansion, greater than ½ inch, between slabs or pavements. They are typically placed in the transverse direction. Like isolation joints, expansion joints are sealed with joint filler material to prevent water/dirt infiltration. For CRCP, expansion joints are typically used where CRCP abuts up to bridges, structure approach slabs or other types of rigid pavements. Expansion joints are also used with PPCP formed at the end of the slab designed to accommodate the expansion and contraction movements of the pavement. Expansion joints are typically not used with JPCP.

Typical joint spacing patterns can be found in the Standard Plans. In some cases such as intersections and parking lots, specialty joint spacing patterns need to be engineered and included on project construction details. See Topic 626 for further details.

622.6 – Base Bond Breaker

Use the requirements in the special provisions of this RFP.

622.8 Transitions and Anchors

Transition joints and anchors are used at transverse joints to minimize deterioration or faulting of the joint where rigid pavement abuts to flexible pavement, a different type of rigid pavement or a structure approach. The following types of transition joints and anchors should be used where applicable.

(1) Concrete Pavement Transition Panel - The concrete pavement transition panel is used to provide a smooth transition between concrete and asphalt pavements (see Figure 622.8A) by minimizing curling of asphalt at the joint. It can also be used as a transition between structure approach slabs and asphalt pavement. Transition panel is a 12-foot long reinforced concrete panel placed between the existing or new asphalt pavement and the concrete pavement or approach slab. It is not always possible to build this panel due to short construction windows and limited space. Where building this panel is not possible, a JPCP End Anchor or CRCP Transition Joint Type A or C should be used.

Figure 622.8A
Concrete Pavement to Asphalt Pavement Transition Panel

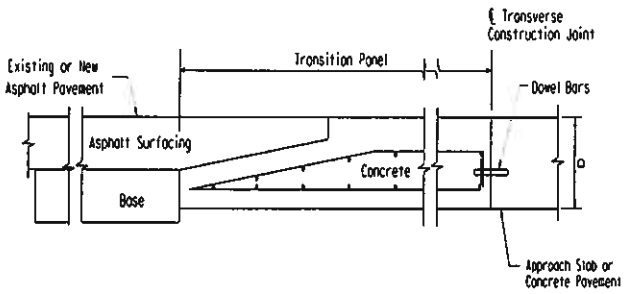

NO SCALE

(2) Continuously Reinforced Concrete Pavement
For CRCP, terminal joints and expansion joints shall be used at all transitions to or from structure approach slabs, or other pavement type as outlined in this index and Table 622.8. Where a construction joint is not used to connect two segments of CRCP, an expansion joint shall be used. Where indicated in Table 622.8 use a wide flange beam or pavement anchor. Expansion joints and sometimes anchors or wide flange beams are needed to accommodate and minimize the movement of the end of a CRCP section. Standard Plans include a variety of details for these transitions and terminal anchors.

Depending on the CRCP terminal type to be used, Figures 622.8B and 622.8C show the schematic diagrams of Pavement Anchor, Wide Flange Beam, and Expansion Joint sequential connection between CRCP and existing structure approach slab or other types of pavement.

The following types of joints and anchors are used for CRCP:

(a) Terminal Joints – Terminal joints are used in CRCP to transition to another pavement type or to a structure approach slab. It is found at the beginning and end of all CRCP. Its function is to isolate CRCP and adjacent pavement types or approach slab to prevent damage and faulting at the transverse joint. Pavement performance can significantly be affected by the planned use and location of terminal joints. The following are terminal joint types for CRCP:

- Terminal Joint Type (A) - Use when constructing new CRCP next to existing asphalt pavement. It consists of two contraction joints at 10 feet and 15 feet from CRCP/existing asphalt terminus. Dowel bars are not used in this terminal joint. Terminal Joint Type (A) should only be used if concrete pavement transition panel is not viable.
- Terminal Joint Type (B) - Use when the newly constructed CRCP terminates where future pavement will be constructed in the future. CRCP at the terminus will be supported with reinforced concrete support slab and backfilled with backing material and later removed when the new pavement will be constructed.
- Terminal Joint Type (C) - Use when the newly constructed CRCP terminates where proposed temporary asphalt pavement will be constructed. CRCP at the terminus will be supported with a reinforced concrete support slab. Terminal joint Type C is mostly used in construction where temporary traffic for staging is required.
- Terminal Joint Type (D) - Use when constructing new CRCP next to existing JPCP, PPCP, or structure approach slab. It consists of a transverse construction joint with dowel bars drill and bonded to existing concrete.
- Terminal Joint Type (E) - Use when constructing new CRCP next to new JPCP, PPCP, or structure approach slab. It consists of a transverse construction joint with dowel bars placed at the joint of CRCP and the new concrete.

(b) Expansion Joint - Expansion joint is a full depth, full width transverse joint designed to absorb the pavement expansion without damaging adjacent structures. The expansion joint is used in combination with transition joints (see Figures 622.8B and 622.8C. The use of expansion joint by itself is economical compared to pavement anchor or wide flange beam terminal in CRCP pavement sections that are less than 1,200 feet where pavement terminates at structure approach slab, or other types of pavements.

(c) Wide-Flange Beam - Wide flange beam is a joint that allows the end of the CRCP slab to expand. The wide flange beam is set in a 10-foot long support slab. The top flange of the beam is flush with the pavement surface. An expansion joint, type WF and terminal joint is used in combination with

the wide flange beam (see Figure 622.8B). Wide flange beams are not used with pavement anchors. Do not use wide flange beam in high mountain or high desert climate region or anywhere else where it is expected to grind more than 0.05' (1/2 inch) of concrete during the service life of the joint.

Table 622.8 identifies circumstances for where to use terminal joints, expansion joints, pavement anchors, and wide flange beams.

(d) Pavement Anchor - Pavement anchors (also referred to as anchor lugs) are used to restrict downhill movement in grades of 3 percent or more. Pavement anchors consist of heavily reinforced rectangular reinforced transverse concrete lugs that are integrally constructed with the CRCP (see Figure 622.8C). The anchors are placed in the subgrade without forms underneath the pavement prior to placement of the pavement. The standard spacing of the lugs is 17 feet center to center from the expansion joint or each other. The pavement anchor is used in combination with expansion joint and terminal joint (see Figures 622.8C. Pavement anchors are not used with wide flange beams.

Table 622.8 is used to identify the circumstances for and the number of anchors needed.

(3) Jointed Plain Concrete Pavement - The following types of transition joints and anchors are used only for JPCP:

(a) Terminal Joint Type 1 – Use when constructing new JPCP next to existing concrete pavement or structure approach slab. It consists of a transverse construction joint with dowel bars drill and bonded to existing concrete.

(b) Terminal Joint Type 2 – Use when constructing new JPCP next to new structure approach slabs or concrete to asphalt transition panel. It consists of a transverse construction joint with dowel bars placed at the joint of new concrete pavement or structure approach slabs and the new concrete.

(c) End Anchor - Use when JPCP abuts to asphalt or composite pavement and Concrete Pavement Transition Panel is not used. Also recommended where JPCP abuts to structure approach slabs. Consists of a 14-foot long end panel which varies in thickness from the designed thickness to 2 feet. Base type and thickness under the end anchor is the same as base under JPCP.

(4) Precast Panel Concrete Pavement - For PPCP, expansion joints are placed at the end of each post-tensioned section of pavement to absorb the large expansion and contraction movement of the pavements. Dowel bars are used to provide load transfer across the joint.

EXHIBIT 21-A

Table 622.8
Use of Transitions and Anchors in CRCP

Type	Length of CRCP		
	<2000 Feet	>2000 feet	
		Grade <3%	Grade >3%
Terminal Joint	Yes	Yes	Yes
Expansion Joint	Yes[a]	Yes	Yes
Wide Flange Beam	No	Yes[b]	No
Pavement Anchor	No	No	Yes[c]

[a] Can provide one side only when CRCP section is ≤500 feet.
[b] Can provide on one side only when CRCP section is ≤1 mile.
[c] Provide one anchor lug per percent of grade up to maximum of 5.

Figure 622.8B
Wide Flange Connection Between CRCP and Existing Structure Approach Slab

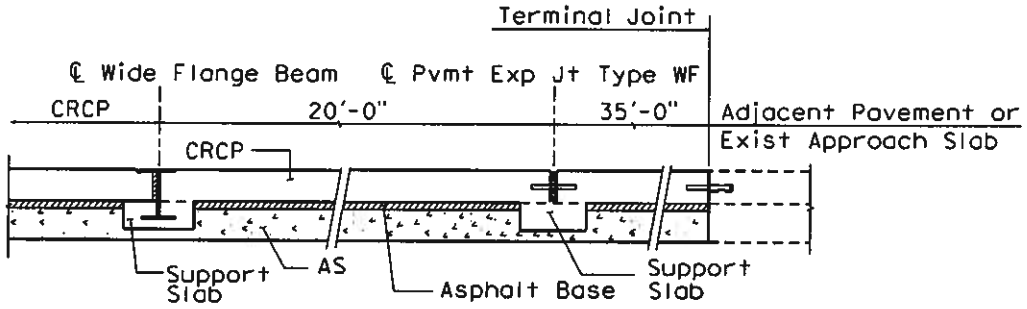

NO SCALE

EXHIBIT 21-A

Figure 622.8C
Pavement Anchor Connection Between CRCP and Existing Structure Approach Slab

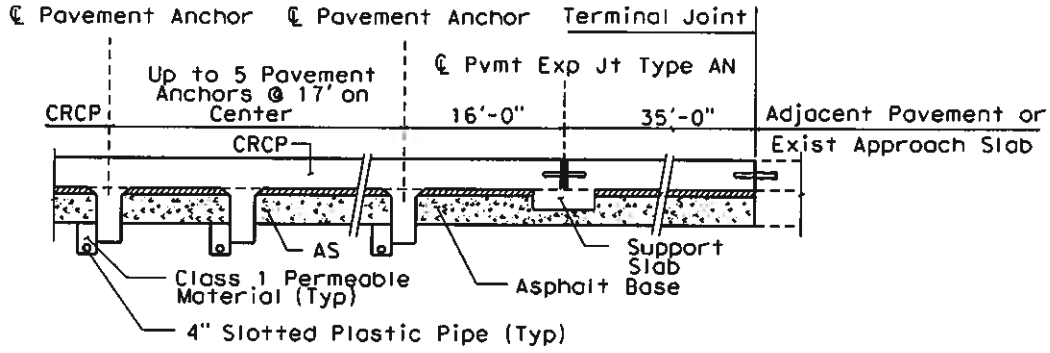

NO SCALE

Note: Pavement anchor shown is for 5-lug system. Number of lugs varies depending on project requirements (See Table 622.8)

EXHIBIT 21-B

Pavement Tapers & Shoulder Backing

EXHIBIT 21-B
TAPERS AND SHOULDER BACKING

Topic A - Pavement Tapers

Index A.1 - Background and Purpose

Pavement tapers are a common design detail for asphalt layer overlays and other projects where new pavement surface has a higher profile than existing pavement surface or curbs. The goal of tapers is to provide a smooth unnoticeable transition from pavement to pavement. Tapers are intended to provide a reasonable cost alternative to engineering a profile for every transition. However, in some cases, an engineered profile may be more cost-effective than a transition.

This section provides information on the best design practices for transition tapers that meet geometric, operational, constructability, as well as other pavement surface and drainage standard practices. The tapers presented in this index meet the Caltrans standards and requirements for grade breaks in Index 204.4. The pavement tapers discussed herein do not address every possible situation that can be encountered on projects throughout the State. Good engineering judgment should still be exercised when developing transition taper details for a specific project. This index only addresses permanent pavement transition tapers used on overlay and other pavement projects.

A.2 - Engineering Requirements and Considerations

(1) Minimum Thickness Requirement. In order for tapers to be constructable, maintainable and meet performance requirements:

a) The minimum thickness for an asphalt pavement taper should be no less than 3 times the maximum aggregate size (example 0.15’ for ½” aggregate and 0.20’ for ¾” aggregate.)

b) The minimum thickness of the overall surface course layer (existing and new) in the taper should be no less than that of the adjoining existing pavement.

c) When tapering into an existing pavement that was previously overlaid (pavement preservation or rehabilitation), the new taper should overlap the taper of the previous overlay to avoid creating a “dip” or “weak spot” in the pavement (see Figure A.2A).

(2) Transition Taper Slopes. The taper slope should be 200:1 or flatter, with taper slope of 400:1 being preferred in highways with design speeds of 65 mph or higher. At locations where taper slopes flatter than 400:1 are desired, engineered profiles should be used because they are often shorter, less expensive, and easier to construct than the pavement taper.

(3) Design Life Requirements for Tapers. For new construction, widening, and rehabilitation/reconstruction projects, the minimum thickness of the pavement structure (existing plus surface course overlay) for pavement tapers must meet the minimum pavement design life requirements for the project as discussed in Topic 612 of the Highway Design Manual (HDM). This is intended to prevent creating isolated "weak spots" in the pavement that may require additional maintenance and repair in the future. On rehabilitation and reconstruction projects, where the pavement structure of the taper does not meet the pavement design life requirements, the pavement structure or part of it will need to be removed and replaced. Deviations from this requirement or decision not to reconstruct the pavement sections underneath bridges will require a mandatory design exception from Headquarters Pavement Program for pavement design life (See HDM Index 612.2 and 612.5). Since pavement preservation projects (preventive maintenance and CAPM projects) are not designed for structural capacity, the minimum thickness of the pavement structure for the pavement taper needs only to match or exceed the existing pavement structure. See Figure A.2B for further details.

Figure A.2A

Tapering into a Previously Overlaid Pavement

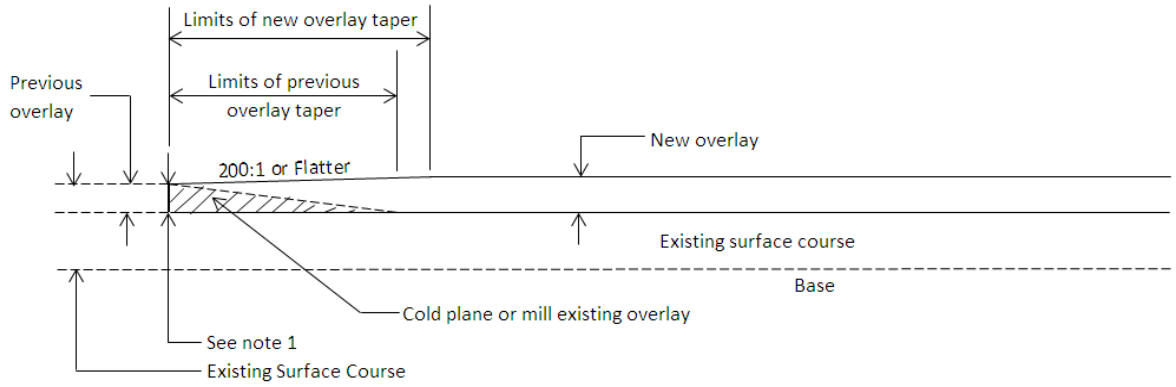

No Scale

Note:

1. Minimum thickness should match thickness of the previous overlay.

Figure A.2B

New Structure Approach Pavement Transition Details

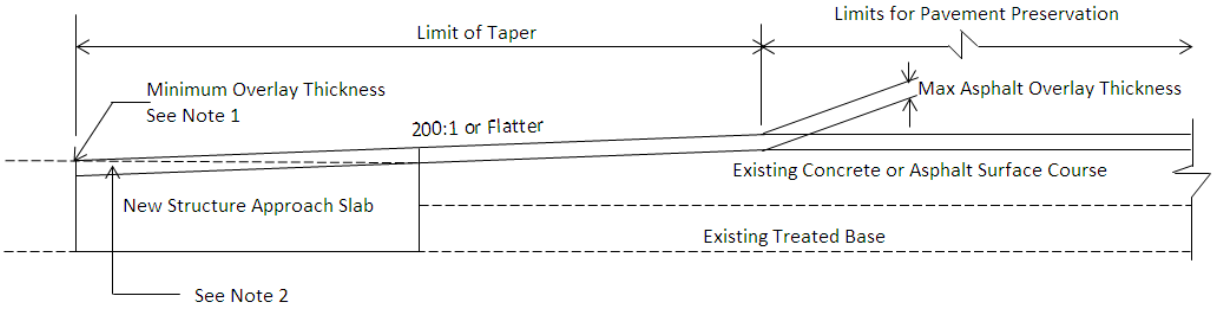

Pavement Preservation

No Scale

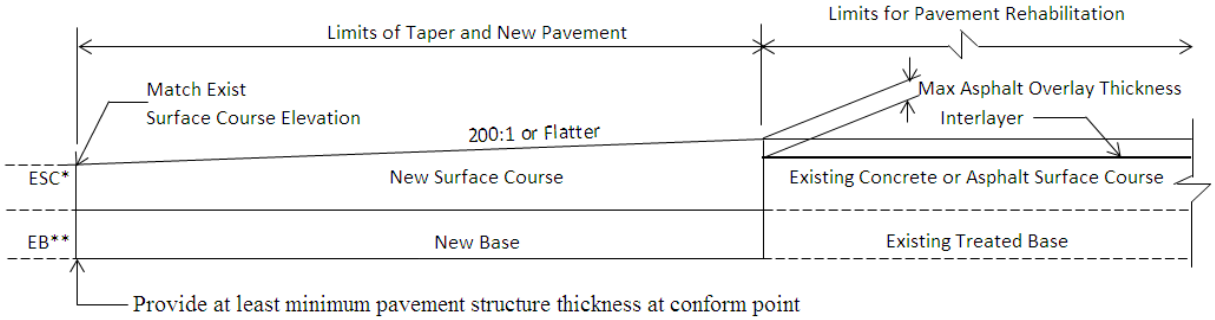

*ESC = Exist Surface Course

**EB = Exist Base

Pavement Rehabilitation

No Scale

Notes:

1. Use maximum overlay thickness or 3x maximum aggregate size whichever is less.
2. Cold plane as needed to conform overlay with existing pavement.

A.3 Tapers into Existing Pavement or Structure

Figures A.3A to A.3C provide details on how to construct pavement tapers.

(1) Tapers into an Existing Asphalt Pavement. Where a new pavement structure or an overlay is tapering into an existing asphalt pavement that is not part of the project, the following apply:

a) For preventive maintenance projects (thin asphalt overlays of 0.10’ or less), the Design Engineer should follow the taper details in Figure A.3A.

b) For CAPM projects, taper the overlay using the same details used for OGFC taper to existing OGFC or HMA pavement surface course (See Figure A.3A)

c) For rehabilitation projects, taper the overlay using the taper details shown in Figure A.3A for HMA taper to existing HMA surface course.

(2) Tapers into an Existing Concrete Pavement. Where a new pavement structure or an overlay is tapering into an existing pavement that is not part of the project or into/under a structure, grinding existing concrete pavement to create a taper is not recommended because it shortens the life of the concrete pavement. Because it is not always practical to remove and replace concrete pavement for every overlay, the following guidance should be followed regarding tapers for concrete pavement.

a) For preventive maintenance projects (thin asphalt overlays of 0.10’ or less), the taper should follow the taper details for OGFC overlay over asphalt pavement found in Figure A.3A or reduce the thickness of overlay to 0.08’ at end of taper and roll down edge to minimize raveling. For under structures, existing concrete surface may remain.

b) For CAPM projects, either taper the overlay down using the same details used for OGFC (See Figure A.3A) or replace the concrete pavement slab. For under structures, the existing concrete surface may remain but should be repaired and ground or rebuilt as needed in accordance with CAPM strategies for concrete pavement in HDM Index 624.2.

c) For rehabilitation projects, do not grind the concrete pavement to accommodate a taper. Instead, remove concrete pavement within the taper section and replace with a new pavement structure that will meet the design life requirements for the project as defined in Topic 612 of the HDM.

d) When grinding concrete pavement, meet the following two conditions:

- Use a diamond grinder and not a planing machine.
- Never grind more than 1 inch or reduce the thickness of the concrete pavement slab to less than 0.65 feet.

If neither of these conditions can be attained with the taper detail, then remove and replace the concrete pavement slabs and the underlying base as needed for the transition taper section to match the existing pavement surface.

(3) Longitudinal Tapers at Shoulders, Curbs, Dikes, Inlets, and Metal Beam Guard Railing. Detailed drawings and information on the best design practices for longitudinal tapers at shoulders, curbs, dikes, inlets, and metal beam guard railing (MBGR) are shown in Figure A.3B.

(4) Tapers Into or Under Structures. Index 209.4(4) and Figure 209.4B provide recommendations for tapering pavement and structure approach slab when the approach slab is being replaced with the overlay. This detail can help provide a smoother transition between pavement preservation overlay and the structure. It also reduces length and cost of pavement replacement of tapers for rehabilitation projects.

Figure A.3C provides a layout and information for transition tapers under an existing structure. The following guidance should be followed when designing tapers underneath over-crossings or into bridges:

(a) Compare the cost and constructability of very flat tapers (400:1 or flatter) vs. engineered profiles to ensure that the less expensive and easier to construct alternative is used when replacing pavement underneath a structure.
(b) The minimum thickness of the pavement structure for transition tapers into or under bridges must meet the minimum design life requirements discussed in Index A.2(4) for new construction, widening, rehabilitation, and reconstruction projects.

Figure A.3A

Transverse Transition Tapers for Pavement Preservation Projects

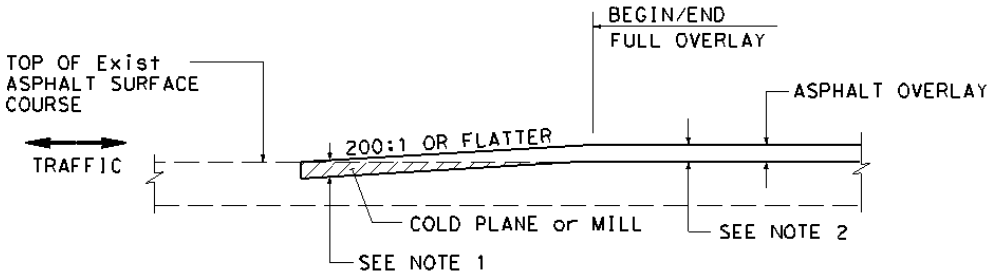

TRANSVERSE ASPHALT TAPER TO EXISTING ASPHALT PAVEMENT

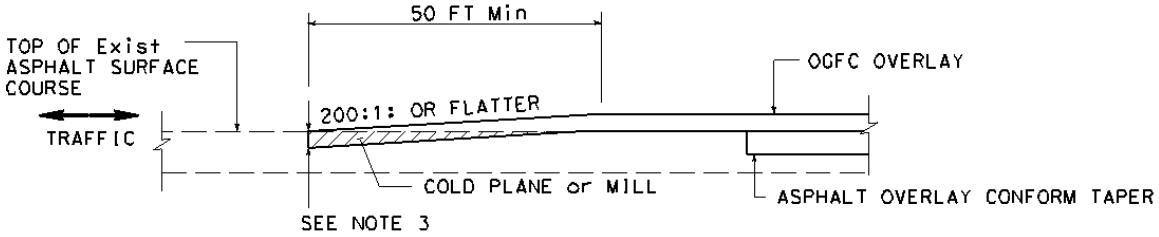

TRANSVERSE OGFC TAPER TO EXISTING ASPHALT PAVEMENT

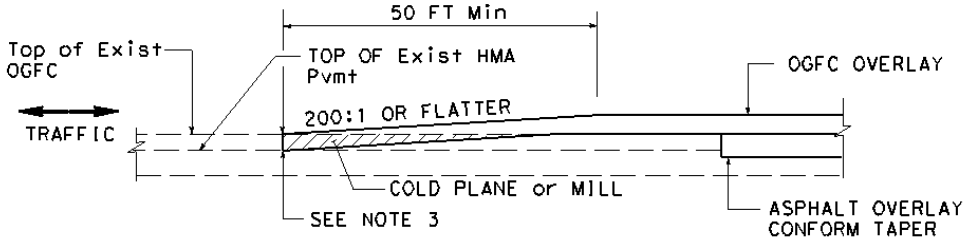

TRANSVERSE OGFC TAPER TO EXISTING OGFC PAVEMENT

NOTES:

1. MINIMUM THICKNESS SHOULD MATCH THE THICKNESS OF THE TOP LIFT.
2. SEE HDM FOR MINIMUM THICKNESS.
3. SAME THICKNESS AS OGFC OVERLAY OR 0.10' WHICHEVER IS LESS.
4. DO NOT USE HMA TO BRING THE SHOULDERS UP TO GRADE WHEN TRAVELED WAY IS OGFC.

LEGEND:

HMA - HOTMIX ASPHALT
OGFC - OPEN GRADED FRICTION COURSE

NO SCALE

Figure A.3B

Longitudinal Tapers at Shoulders, Curbs, Dikes, Inlets, and Metal Beam Guard Railing

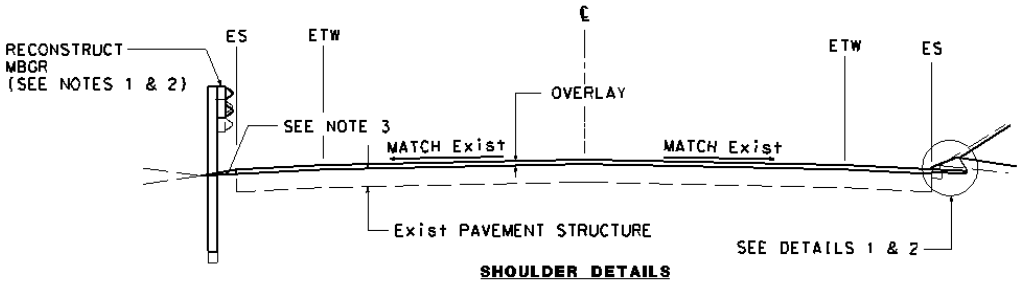

SHOULDER DETAILS

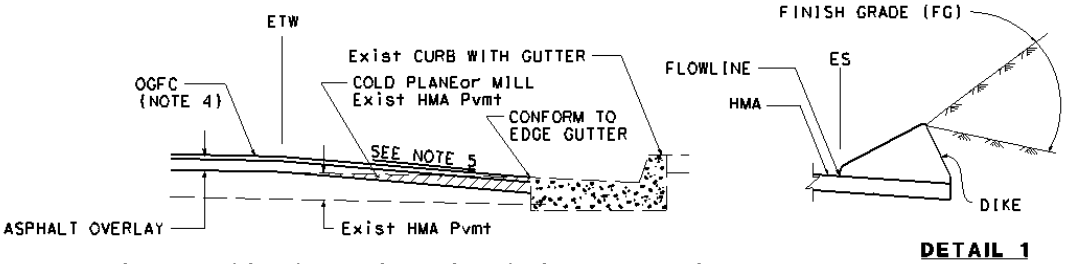

ASPHALT CONFORM TO EXISTING CURB WITH GUTTER DETAIL

DETAIL 1
SEE NOTE 6

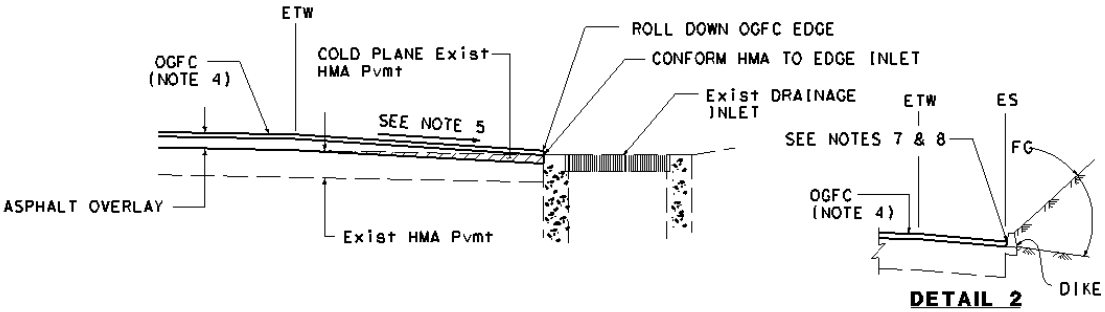

DETAIL 2

ASPHALT CONFORM TO EXISTING DRAINAGE

NOTES:

1. ADDITIONAL DESIGN AND SAFETY CRITERIA MAY APPLY FOR METAL BEAM GUARD RAILING (MBGR). FOR FURTHER INFO, SEE TRAFFIC MANUAL OR DISTRICT TRAFFIC.
2. WHEN GRINDING OR PAVING NEXT TO MBGR OR OBSTACLE, RECONSTRUCTING MBGR WILL BE NECESSARY TO ACCOMMODATE GRINDING MACHINES AND COMPACTION EQUIPMENT.
3. CONTACT DISTRICT LANDSCAPE AND MAINTENANCE REGARDING THE APPROPRIATE TREATMENT FOR WEED ABATEMENT.
4. OGFC APPLIES ONLY WHEN USED AS A SURFACE COURSE. OMIT DETAILS FOR THIS COURSE WHEN OGFC IS NOT USED.
5. SEE HDM TOPIC 302 FOR MAXIMUM ALLOWABLE CROSS-SLOPES.
6. FOR ADDITIONAL INFORMATION ON DIKES, SEE HDM TOPIC 303, AND STANDARD PLAN A788.
7. VERIFY WITH HYDRAULICS TO SEE IF DIKE NEEDS TO BE RAISED TO MAINTAIN CAPACITY OF GUTTER.
8. VERIFY WITH DISTRICT HYDRAULICS IF ADDITIONAL DRAINAGE IS REQUIRED AT THE CONFORM ON THE SHOULDER OR AT BRIDGE APPROACH SLABS IN ORDER TO AVOID PONDING.

Figure A.3C

Transition Taper Underneath Overcrossing/Bridge

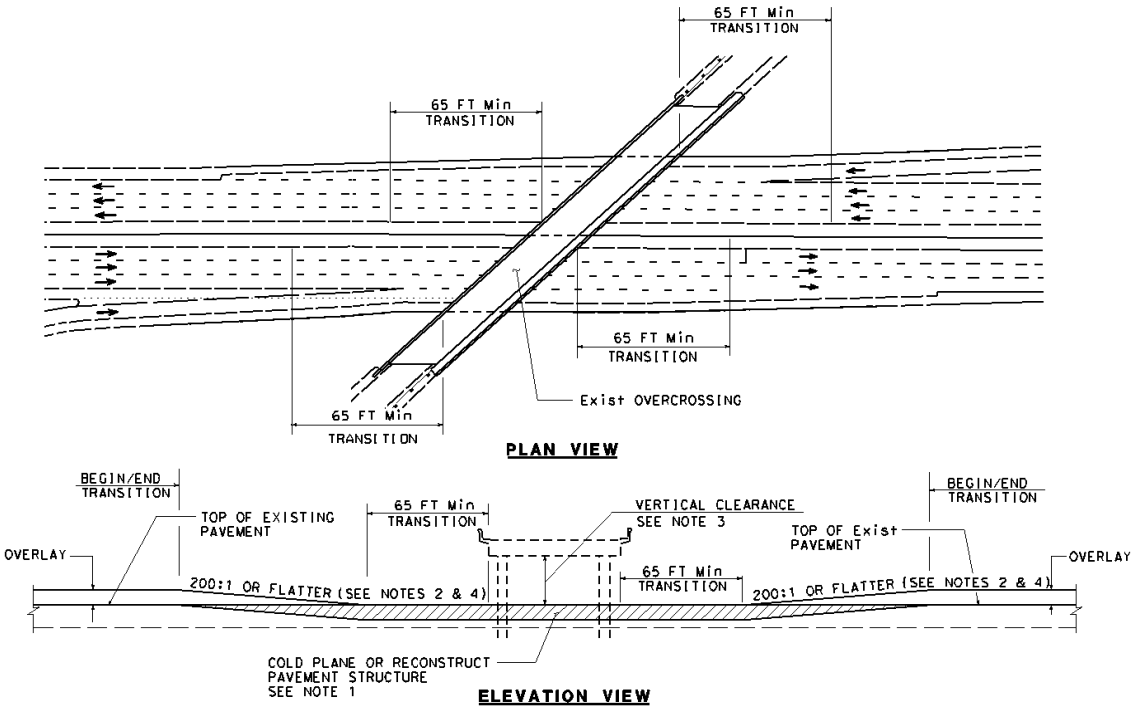

NOTES:

1. PAVEMENT STRUCTURE THICKNESS NEEDS TO PROVIDE THE PROPOSED PAVEMENT DESIGN LIFE. THIS MAY REQUIRE THAT THE PAVEMENT STRUCTURE BE REMOVED AND REPLACED.
2. VERIFY THAT THE EXISTING DRAINAGE FACILITIES WILL CONTINUE TO FUNCTION PROPERLY AFTER TRANSITION IS COMPLETED.
3. FOR MINIMUM VERTICAL CLEARANCE REQUIREMENTS, SEE HWY DESIGN MANUAL, INDEX 309.2
4. CREATION OF A SAG MAY REQUIRE ADDITIONAL DRAINAGE FEATURES.

Topic B – Shoulder Backing

Index B.1 - Background and Purpose

(1) *Purpose.* Shoulder backing is a thin course of granular material that is used to provide support to the pavement edge by preventing edge cracking and pavement edge loss. Shoulder backing also minimizes pavement edge drop-off heights for overlays.

(2) *Standards and Requirements.* The placement of shoulder backing requires proper compaction of the shoulder backing material. In the past, Shoulder backing has typically failed due to erosion problems caused by inappropriate use or poor compaction of the shoulder backing material. This creates issues for both construction and maintenance personnel, which may include increased exposure for maintenance crews to replace eroded material and use of unconventional construction practices to build shoulder backing on steep slopes.

(3) *Application*: Shoulder backing is designed to provide edge support for thin overlays placed on existing pavements. Do not use shoulder backing as embankment material in the following cases:

- To repair erosion or subsidence in existing slopes (See Figure B.3C)
- For side slope reconstruction (See Figure B.3C)
- In locations where the overlay thickness is greater than 0.50 ft (See Figure B.3C).
- For backfill behind dikes (See Figure B.3D)
- To construct the required minimum hinge width (HW) for guardrails, dikes, and barriers
- In roadside ditches or gutters (See Figure B.3E). Since the material used for shoulder backing can be erodible, use non-erodible materials or stabilized base material in roadside ditches or gutters.

Shoulder backing is not be used in the above cases because the material and/or compaction specifications requirements in the Standard Specifications will not provide the desired results. Alternative engineering solutions should be utilized in these situations. Alternative engineering solutions include slope reconstruction, compacted fill, or use of stabilized material. Some alternatives to shoulder backing may require developing a nonstandard special provision.

Index B.2 – Alternate Materials and Admixtures

(1) *Alternate Materials.* Alternate materials for shoulder backing include imported borrow and asphalt grindings.

(a) *Imported borrow:* If native material does not meet the

specifications for shoulder backing material, utilize imported borrow which meets the specifications for shoulder backing material.

(b) Asphalt grindings: The Deputy Directive on Recycling Asphalt Concrete allows the use of asphalt grindings for shoulder backing; however, there are some limitations to where asphalt grindings can be used. For information on where asphalt grindings cannot be used consult the District Environmental unit. As stated in the Project Development Procedures Manual (PDPM), a Memorandum of Understanding (MOU) dated January 12, 1993 between the Department of Fish and Game (DFG) and Caltrans, allows Caltrans to use asphalt grindings for shoulder backing where these materials will not enter the water system.

(2) Admixtures. Admixtures may be used if recommended by the District Materials Engineer and their use is permitted in the environmental document and regulatory permits. District Environmental can assist in determining if and where admixtures can be used. Three types of admixtures (lime, cement, and seal coat with an asphaltic emulsion) are approved for use with shoulder backing.

(a) Lime and cement admixtures: Lime and cement are uniformly mixed into the shoulder backing material prior to application.

(b) Seal coats: Seal coats with an asphaltic emulsion are applied in situ on top of shoulder backing material. When seal coats are specified, the appropriate seal coat special provisions should be included into the project special provisions. Seal coats are paid for separately from shoulder backing material.

Index B.3 – Design

The limits, slopes, and other design details for shoulder backing need to be documented on the plans. The following design standards apply when designing shoulder backing details:

(1) Place shoulder backing from the edge of pavement (EP) to hinge point (HP). However, where the horizontal distance from EP to HP is greater than 3 feet, shoulder backing should be placed on a width of at least 2 feet from EP (See Figures B.3A and B.3B). The Design Engineer should consult with the District Materials Engineer for conditions where the distance from EP to HP is less than 2 feet and there are minimum hinge width requirements for dike, guardrail and barriers.

(2) Shoulder backing cross slope should be 10:1 or flatter where possible. Where there is insufficient width for a 10:1 slope, a steeper cross slope can be used but should not be steeper than 6:1 (See Figure B.3A).

(3) The minimum hinge width (HW) from EP to new HP should be 2 feet (See Figure B.3B). Where the existing HW is less than 2 feet, slope reconstruction (See Figure B.3C) or some other strategy should be used instead of shoulder backing.

(4) Do not place shoulder backing on existing side slopes where shoulder backing cross slope will be steeper than 6:1 and/or the HW will be less than 2 feet (See Figures B.3A & B.3B)

(5) The maximum thickness for shoulder backing is 0.50 foot (See Figure B.3B). Where the thickness will exceed 0.50 foot, use alternative strategies that have a combination of more stringent material and compaction requirements.

(6) Where the combined distance for HW and side slope will exceed 5 feet in order to comply with the slope requirement specified in this document, side slope reconstruction is recommended in lieu of shoulder backing (See Figure B.3C)

(7) At the option of the District, shoulder backing can be placed up to a thickness of 0.50 foot to cap new construction or reconstructions (See Figures B.3B & B.3C).

(8) Place shoulder backing to match the pavement surface, even when the surface course layer is open graded friction course (OGFC). This reduces future maintenance needs to replace the shoulder backing as it subsides.

Figures B.3A through B.3E show some examples of what should and should not be done when using shoulder backing.

Figure B.3A

TYPICAL APPLICATION OF SHOUILDER BACKING

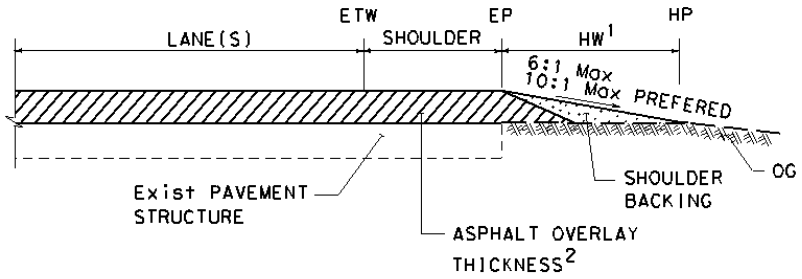

Figure B.3B

ALTERNATIVE PLACEMENT FOR EXISTING SLOPES STEEPER THAN 6:1

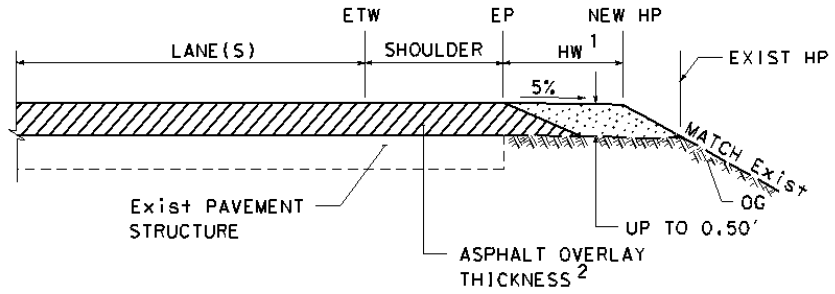

Notes:

1. MINIMUM HW IS 2 FEET. WHEN HW IS LESS THAN 3 FEET, DISTRICT MATERIALS ENGINEER SHOULD BE CONSULTED REGARDING STRUCTURAL STABILITY DUE TO WIDTH REDUCTION,

2. EDGE TREATMEMENT SHOWN ARE FOR ASPHALT OVERLAY THICKNESS OF 0.45 FOOT OR LESS. FOR ASPHALT THICKNESS OF MORE THAN 0.45 FOOT, SEE STANDARD PLANS FOR EDGE TREATMEMENT DETAILS.

ETW - EDGE OF TRAVELED WAY
EP - EDGE OF PAVEMENT
HP - HINGE POINT
HW - HINGE WIDTH
OG - ORIGINAL GROUND

NOT TO SCALE

Figure B.3C

PLACEMENT OF SHOULDER BACKING THICKNESS GREATER THAN 0.50 FEET FOR SLOPE REPAIR

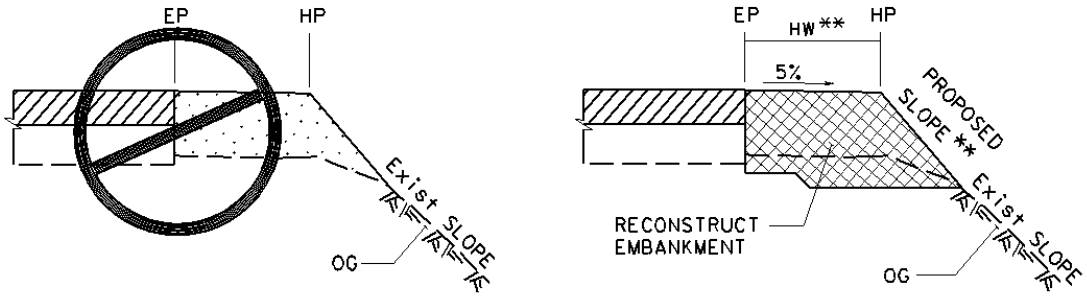

** SEE HDM TOPIC 304 FOR ADDITIONAL INFORMATION ON SIDE SLOPES. SEE STANDARD SPECIFICATIONS, FOR ADDITIONAL INFORMATION ON SIDE SLOPE CONSTRUCTION.

SEE DISTRICT MATERIALS ENGINEER FOR MATERIAL RECOMMENDATIONS. (ROADWAY GEOTECHNICAL ALSO NEEDS TO BE CONSULTED FOR PROPOSED SLOPES STEEPER THAN 2:1)

Figure B.3D

PLACEMENT OF SHOULDER BACKING BEHIND DIKES

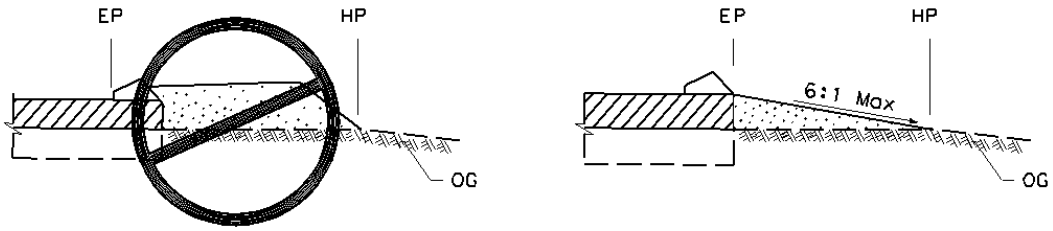

NOT TO SCALE

Figure B.3E

LONGITUDINAL DRAINAGE (ROADSIDE DITCHES / GUTTERS)

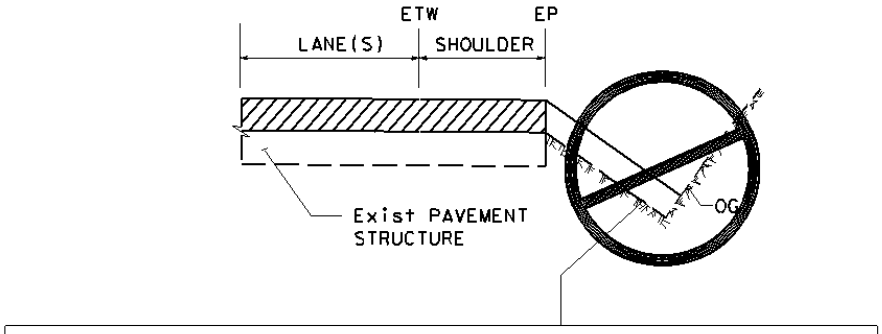

CONSULT WITH AREA MAINTENANCE PERSONNEL AND DISTRICT MATERIALS ENGINEER REGARDING ERODABILITY OF DITCH, ALTERNATIVE MATERIALS TO SHOULDER BACKING, SLOPE SLOUGHING, AND ROCKFALL CATCHMENT IN DITCH.

CONSULT WITH DISTRICT HYDRAULICS ENGINEER REGARDING ACCEPTABLE CHANGE IN DITCH CAPACITY.

CONSULT DISTRICT STORM WATER COORDINATOR REGARDING WATER QUALITY ISSUES.

NOT TO SCALE

EXHIBIT 21-C

Concrete Pavement Design Options

Concrete Pavement Design Options (I-15 Cajon Pass, Type I Subgrade Soil)

Location	Traffic Index	Pavement Replacement				Overlay	
Mainline							
Outside lanes (with Lateral Support)	>17	1.15' JPCP BBB 0.50' ALTB	1.00' CRCP 0.50' HMA-C	0.90' PPCP BBB 0.50' ALTB	1.10' PPCP-N BBB 0.50' ALTB	1.00' CRCP 0.10' min HMA (LC) C&S EC	
Inside lanes (No Lateral Support-Replacement)	12	0.90' JPCP BBB 0.40' ALTB	0.85' CRCP 0.40' HMA-C	0.65' PPCP BBB 0.40' ALTB	0.85' PPCP-N BBB 0.40' ALTB	0.75' CRCP 0.10' min HMA (LC) C&S EC	0.75' CRCP 0.40' HMA-A Rubbilize Exist Pvmt (See Note 4)
Outside Shoulders (See Note 2)	9	0.75' SCP MAD AB(2)	0.75' SCP MAD ALTB			See Note 3	
Inside Shoulders (See Note 2)	8	0.75' JPCP BBB 0.40' ALTB	0.75' CRCP BBB 0.40' ALTB	0.65' PPCP BBB 0.40' ALTB	0.75' PPCP-N BBB 0.40' ALTB	See Note 3	
Brake Check Area	6	0.75' JPCP (RCC) 0.35' RCCB					
Ramps							
Ramps and Parking Lots	Rte 138	0.90' JPCP 0.70' AB(2)					
	Brake Check Area	0.75' SCP BBB 0.35' ALTB (shoulders only)					

Legend

AB(2)	Aggregate Base (Class 2)
ALTB	Alternate Treated Base which may be either LCB, RCCB, HMA or combination thereof. For combinations, minimum thickness of LCB and RCCB is 0.35-ft and for HMA the minimum thickness is 0.10-ft using Type A. For full depth HMA as base, use Type C.
BBB	Base Bond Breaker
C&S EC	Crack and Seat any exposed concrete not previously overlaid with asphalt pavement
CRCP	Continuously Reinforced Concrete Pavement
HMA-C	Hot Mix Asphalt - Type C (Superpave)
HMA(LC)	Hot Mix Asphalt Leveling Course (Superpave)
JPCP	Jointed Plain Concrete Pavement
LCB	Lean Concrete Base or Lean Concrete Base Rapid Setting
MAD	Match Adjacent Pavement Structure Depth
PPCP	Precast Post-tensioned Concrete Pavement
PPCP-N	Other Precast Concrete Pavement Systems which do not use post tensioning to tie slabs together.
RCCB	Roller Compacted Concrete Base
SCP	Shoulder Concrete Pavement

Notes

1	Thicknesses shown are the minimum thicknesses to function as a lane, ramp, or shoulder. Thickness of concrete layer may need to be increased to accommodate temporary use for construction or public traffic.
2	Designs shown do not apply to those portions of shoulders included within widened lane or tied rigid shoulders that meet requirements in Revised HDM 622.4 as meeting requirements of future lane. Use minimum designs for traveled way for widened lane portions of shoulders and tied rigid shoulders meeting requirements of future lane.
3	For concrete overlays of shoulders use pavement type and structure of adjacent lane or pulverize existing asphalt shoulder into aggregate base and overlay to match minimum requirements for Pavement Replacement of shoulder.
4	Fill in any remaining voids between rubillized pavement and overlay with either AB(2) or additional HMA-A. Mix AB(2) with rubillized pavement.

EXHIBIT 22-A

PID Stormwater Data Reports

Dist–County-Route: 08 – SBd - 15
Post Mile Limits: R14.2 / 29.8
Project Type: Pavement Rehabilitation
Project ID (or EA): 0800020456 (0Q740K)
Program Identification: 201.120 – HA22
Phase: ☒ PID ☐ PA/ED ☐ PS&E

Regional Water Quality Control Board(s): Santa Ana and Lahontan

1.	Is the project required to consider incorporating Treatment BMPs?	Yes ☐	No ☒
2.	Does the project disturb 5 or more acres of soil?	Yes ☐	No ☒
3.	Does the project disturb more than 1 acre of soil and not qualify for the Rainfall Erosivity Waiver?	Yes ☐	No ☒
4.	Does the project potentially create permanent water quality impacts?	Yes ☐	No ☒
5.	Does the project require a notification of ADL reuse	Yes ☐	No ☒

If the answer to any of the preceding questions is "Yes", prepare a Long Form – Storm Water Data Report.

Estimate Construction Start Date: March 3, 2016 Construction Completion Date: August 1, 2017
Separate Dewatering Permit (if yes, permit number) Yes ☐ Permit #_____ No ☒
Erosivity Waiver Yes ☐ Date: _____ No ☒

This Short Form – Storm Water Data Report has been prepared under the direction of the following Licensed Person. The Licensed Person attests to the technical information contained herein and the data upon which recommendations, conclusions, and decisions are based. Professional Engineer or Landscape Architect stamp required at PS&E.

Vu Ngo 7/25/11
Vu Ngo, Registered Project Engineer *Date*

I have reviewed the stormwater quality design issues and find this report to be complete, current and accurate:

Cathy Jochai 7/25/11
Cathy Jochai, District/Regional SW Coordinator or Designee *Date*

[Stamp Required for PS&E only]

1. Project Description

- The proposed project will be divided into four (4) segments and are as follows:

  Segment 1: On northbound I-15 from PM 14.2 to PM 21.37 (SR-138).
  Segment 2: On northbound I-15 from PM 21.37 (SR-138) to PM 29.8.
  Segment 3: On southbound I-15 from PM 29.8 to PM 21.37 (SR-138).
  Segment 4: On southbound I-15 from PM 21.37 (SR-138) to PM 14.9.

  Each segment will consist of the following alternatives:

  Alternative 1: No-Build.

  Alternative 2: Replace the 2 outer concrete lanes, random slabs of the 2 inner lanes, mill and overlay on/off ramps as needed.

  Alternative 3: Crack, seat and overlay with asphalt all lanes, and slab replacements of existing lanes as needed.

  The information contained within this report is valid for all build alternatives. All work will be performed within the State Right of Way.

- The project is located within the Santa Ana River and Mojave hydrologic units. Hydrologic areas are Upper Santa Ana River and Upper Mojave which include sub-areas 801.51, 801.52 and 628.20. Cajon Creek is the receiving water body within hydrologic sub area 801.51 and 801.52. The Oro Grande Wash is the receiving water body within hydrologic sub area 628.20. Cajon Wash and Oro Grande are not on the 303(d) List of Water Limited Segments and no constituents identified in the Project Planning and Design Guide (PPDG) is listed as Targeted Design Constituents. Caltrans District 8 Work Plan (2010-2011) dated April, 2010 does not identify this project as being adjacent to a drinking reservoir or recharge facility. 401 Certification is not required.

- The total Disturbed Soil Area (DSA) is estimated to be approximately less than 0.25 acres. The primary DSA contributor will be from possible unpaved staging areas used for storage and parking of construction vehicles and equipments. It is anticipated that two (2) staging areas will be needed within the project limits. Each Staging area will be approximately 100' by 50' yielding a total DSA of 0.23 acres, if located on unpaved areas.

- The project is located within the following MS4 areas: (1) County of San Bernardino (2) No MS4 (Forest Service Land) and (3) City of Hesperia.

2. Construction Site BMPs

- The following BMPs will be included in the lump sum item "Construction Site Management":

  NS-1 Water Conservation Practices

NS-3 Paving and Grinding Operations
NS-8 Vehicle & Equipment Cleaning
NS-9 Vehicle & Equipment Fueling
NS-10 Vehicle & Equipment Maintenance
NS-12 Concrete Curing
NS-14 Concrete Finishing
WM-1 Material Delivery & Storage
WM-2 Material Use
WM-3 Stockpile Management
WM-4 Spill Prevention & Control
WM-5 Solid Water Management
WM-8 Concrete Waste Management
WM-9 Sanitary/Septic Waste Management

- The following BMPs will be paid for as separate bid items:

SC-5 Storm Drain Inlet Protection
SC-10 Fiber Roll
SS-7 Temporary Cover

- Dewatering and separate dewatering permit will not be required during the construction of the project.
- See PSSR Project Cost Estimate attached for the total estimated cost for quantities of all Storm Water Pollution Prevention (SWPP).
- The temporary BMP measures listed above are anticipated BMPs (actions or procedures) at this phase (PID) of the project and will be identified in detail with cost at the PS&E phase."
- During the PS&E phase the temporary construction BMP strategy will be reviewed by the Construction NPDES unit.
- This project does not qualify for an Erosivity Waiver. This project will require Water Pollution Control Program.

Required Attachments

- Vicinity Map
- Evaluation Documentation Form
- Construction Site BMP Consideration Form (required at PS&E only)
- Construction Site BMP Checklist CS-1, Parts 1-6

VICINITY MAP

DATE: 07 - 25 - 2011

Project ID (or EA): 0800020456 (0Q740K)

NO.	CRITERIA	YES ✓	NO ✓	SUPPLEMENTAL INFORMATION FOR EVALUATION
1.	Begin Project Evaluation regarding requirement for consideration of Treatment BMPs	✓		See Figure 4-1, Project Evaluation Process for Consideration of Permanent Treatment BMPs. Go to 2
2.	Is this an emergency project?		✓	If **Yes**, go to 10. If **No**, continue to 3.
3.	Have TMDLs or other Pollution Control Requirements been established for surface waters within the project limits? Information provided in the water quality assessment or equivalent document.		✓	If **Yes**, contact the District/Regional NPDES Coordinator to discuss the Department's obligations under the TMDL (if Applicable) or Pollution Control Requirements, go to 9 or 4. _____ *(Dist./Reg. SW Coordinator initials)* If **No**, continue to 4.
4.	Is the project located within an area of a local MS4 Permittee?	✓		If **Yes**. *(San Bernardino County and City of Hesperia MS4)*, go to 5. If **No**, document in SWDR go to 5.
5.	Is the project directly or indirectly discharging to surface waters?	✓		If **Yes**, continue to 6. If **No**, go to 10.
6.	Is it a new facility or major reconstruction?		✓	If **Yes**, continue to 8. If **No**, go to 7.
7.	Will there be a change in line/grade or hydraulic capacity?		✓	If **Yes**, continue to 8. If **No**, go to 10.
8.	Does the project result in a net increase of one acre or more of new impervious surface?			If **Yes**, continue to 9. If **No**, go to 10. _____ *(Net Increase New Impervious Surface)*
9.	Project is required to consider approved Treatment BMPs.		See Sections 2.4 and either Section 5.5or 6.5 for BMP Evaluation and Selection Process. Complete Checklist T-1 in this Appendix E.	
10.	Project is not required to consider Treatment BMPs. CB *(Dist./Reg. Design SW Coord. Initials)* VN *(Project Engineer Initials)* 7/25/11 *(Date)*	✓	Document for Project Files by completing this form, and attaching it to the SWDR.	

1 *See Figure 4-1, Project Evaluation Process for Consideration of Permanent Treatment BMPs*

DATE: 07/12/2011

Project ID (or EA): 0800020456 (0Q740K)

Project Evaluation Process for the Consideration of Construction Site BMPs

NO.	CRITERIA	YES ✓	NO ✓	SUPPLEMENTAL INFORMATION
1.	Will construction of the project result in areas of disturbed soil as defined by the Project Planning and Design Guide (PPDG)?	✓		If Yes, Construction Site BMPs for Soil Stabilization (SS) will be required. Complete CS-1, Part 1. Continue to 2. If No, Continue to 3.
2.	Is there a potential for disturbed soil areas within the project to discharge to storm drain inlets, drainage ditches, areas outside the right-of-way, etc?		✓	If Yes, Construction Site BMPs for Sediment Control (SC) will be required. Complete CS-1, Part 2. Continue to 3.
3.	Is there a potential for sediment or construction related materials and wastes to be tracked offsite and deposited on private or public paved roads by construction vehicles and equipment?		✓	If Yes, Construction Site BMPs for Tracking Control (TC) will be required. Complete CS-1, Part 3. Continue to 4.
4.	Is there a potential for wind to transport soil and dust offsite during the period of construction?		✓	If Yes, Construction Site BMPs for Wind Erosion Control (WE) will be required. Complete CS-1, Part 4. Continue to 5.
5.	Is dewatering anticipated or will construction activities occur within or adjacent to a live channel or stream?		✓	If Yes, Construction Site BMPs for Non-Storm Water Management (NS) will be required. Complete CS-1, Part 5. Continue to 6.
6.	Will construction include saw-cutting, grinding, drilling, concrete or mortar mixing, hydro-demolition, blasting, sandblasting, painting, paving, or other activities that produce residues?	✓		If Yes, Construction Site BMPs for Non-Storm Water Management (NS) will be required. Complete CS-1, Parts 5 & 6. Continue to 7.
7.	Are stockpiles of soil, construction related materials, and/or wastes anticipated?	✓		If Yes, Construction Site BMPs for Waste Management and Materials Pollution Control (WM) will be required. Complete CS-1, Part 6. Continue to 8.
8.	Is there a potential for construction related materials and wastes to have direct contact with precipitation; stormwater run-on, or stormwater runoff; be dispersed by wind; be dumped and/or spilled into storm drain systems?	✓		If Yes, Construction Site BMPs for Waste Management and Materials Pollution Control (WM) will be required. Complete CS-1, Part 6. Continue to 9.
9.	End of checklist.	✓	Document for Project Files by completing this form, and attaching it to the SWDR.	

PE to initialize after concurrence with Construction (PS&E only) *Date*

Construction Site BMPs
Checklist CS-1, Part 1

Prepared by: Armand Rubio Date: 07/12/2011 District-Co-Route: 08-SBd-15

PM : R14.2/29.8 Project ID (or EA): 0800020456 (0Q740K) RWQCB: Santa Ana and Lahontan

Soil Stabilization

General Parameters

1.	How many rainy seasons are anticipated between begin and end of construction?	2
2.	What is the total disturbed soil area for the project? (ac)	< 0.25
	(a) How much of the project DSA consists of slopes 4:1 (h:v) or flatter? (ac)	< 0.25
	(b) How much of the project DSA consists of 4:1 (h:v) < slopes < 2:1 (h:v)? (ac)	0
	(c) How much of the project DSA consists of slopes 2:1 (h:v) and steeper? (ac)	0
	(d) How much of the project DSA consists of slopes with slope lengths longer than 20 ft? (ac)	0
3.	What rainfall area does the project lie within? (Refer to Table 2-1 of the Construction Site Best Management Practices Manual)	5 & 6
4.	Review the required combination of temporary soil stabilization and temporary sediment controls and barriers for area, slope inclinations, rainy and non-rainy season, and active and non-active disturbed soil areas. (Refer to Tables 2-2, and 2-3 of the Construction Site Best Management Practices Manual for Rainfall Area requirements.)	☐ Complete

Scheduling (SS-1)

5.	Does the project have a duration of more than one rainy season and have disturbed soil area in excess of 25 acres?	☐ Yes ☒ No
	(a) Include multiple mobilizations (Move-in/Move-out) as a separate contract bid line item to implement permanent erosion control or revegetation work on slopes that are substantially complete. (Estimate at least 6 mobilizations for each additional rainy season. Designated Construction Representative may suggest an alternate number of mobilizations.)	☐ Complete
	(b) Edit Order of Work specifications for permanent erosion control or revegetation work to be implemented on slopes that are substantially complete.	☐ Complete
	(c) Edit permanent erosion control or revegetation specifications to require seeding and planting work to be performed when optimal.	☐ Complete

Preservation of Existing Vegetation (SS-2)

6. Do Environmentally Sensitive Areas (ESAs) exist within or adjacent to the project limits? (Verify the completion of DPP-1, Part 5) ☐Yes ☒No

   (a) Verify the protection of ESAs through delineation on all project plans. ☐Complete

   (b) Protect from clearing and grubbing and other construction disturbance by enclosing the ESA perimeter with high visibility plastic fence or other BMP. ☐Complete

7. Are there areas of existing vegetation (mature trees, native vegetation, landscape planting, etc.) that need not be disturbed by project construction? Will areas designated for proposed treatment BMPs need protection (infiltration characteristics, vegetative cover, etc.)? (Coordinate with District Environmental and Construction to determine limits of work necessary to preserve existing vegetation to the maximum extent practicable.) ☐Yes ☒No

   (a) Designate as outside of limits of work (or designate as ESAs) and show on all project plans. ☐Complete

   (b) Protect with high visibility plastic fence or other BMP. ☐Complete

8. If yes for 6, 7, or both, then designate ESA fencing as a separate contract bid line item, *if not already incorporated as part of design pollution prevention work (See DPP-1, Part 5).* ☐Complete

Slope Protection

9. Provide a soil stabilization BMP(s) appropriate for the DSA, slope steepness, slope length, and soil erodibility. (Consult with District/Regional Landscape Architect.)

   (a) Select SS-3 (Hydraulic Mulch), SS-4 (Hydroseeding), SS-5 (Soil Binders), SS-6 (Straw Mulch), SS-7 (Geotextiles, Mats, Plastic Covers, and Erosion Control Blankets), SS-8 (Wood Mulching), other BMPs or a combination to cover the DSA throughout the project's rainy season. ☐Complete

   (b) Increase the quantities by 25% for each additional rainy season. (Designated Construction Representative may suggest an alternate increase.) ☐Complete

   (c) Designate as a separate contract bid line item. ☐Complete

Slope Interrupter Devices

10. Provide slope interrupter devices for all slopes with slope lengths equal to or greater than of 20 ft in length. (Consult with District/Regional Landscape Architect and Designated Construction Representative.)

    (a) Select SC-5 (Fiber Rolls) or other BMPs to protect slopes throughout the project's rainy season. ☐Complete

    (b) For slope inclination of 4:1 (h:v) and flatter, SC-5 (Fiber Rolls) or other BMPs shall be placed along the contour and spaced 20 ft on center. ☐Complete

    (c) For slope inclination between 4:1 (h:v) and 2:1 (h:v), SC-5 (Fiber Rolls) or other BMPs shall be placed along the contour and spaced 15 ft on center. ☐Complete

    (d) For slope inclination of 2:1 (h:v) and greater, SC-5 (Fiber Rolls) or other BMPs shall be placed along the contour and spaced 10 ft on center. ☐Complete

    (e) Increase the quantities by 25% for each additional rainy season. (Designated Construction Representative may suggest alternate increase.) ☐Complete

    (f) Designate as a separate contract bid line item. ☐Complete

Channelized Flow

11. Identify locations within the project site where concentrated flow from stormwater runoff can erode areas of soil disturbance. Identify locations of concentrated flow that enters the site from outside of the right-of-way (off-site run-on). ☐Complete

    (a) Utilize SS-7 (Geotextiles, Mats, Plastic Covers, and Erosion Control Blankets), SS-9 (Earth Dikes/Swales, Ditches), SS-10 (Outlet Protection/Velocity Dissipation), SS-11 (Slope Drains), SC-4 (Check Dams), or other BMPs to convey concentrated flows in a non-erosive manner. ☐Complete

    (b) Designate as a separate contract bid line item. ☐Complete

Construction Site BMPs
Checklist CS-1, Part 2

Prepared by: Armand Rubio Date: 07/12/2011 District-Co-Route: 08-SBd-15

PM : R14.2/29.8 Project ID (or EA): 0800020456 (0Q740K) RWQCB: Santa Ana & Lahontan

Sediment Control

Perimeter Controls - Run-off Control

1. Is there a potential for sediment laden sheet and concentrated flows to discharge offsite from runoff cleared and grubbed areas, below cut slopes, embankment slopes, etc.? ☒Yes ☐No

   (a) Select linear sediment barrier such as SC-1 (Silt Fence), **SC-5 (Fiber Rolls)**, SC-6 (Gravel Bag Berm), SC-8 (Sand Bag Barrier), SC-9 (Straw Bale Barrier), or a combination to protect wetlands, water courses, roads (paved and unpaved), construction activities, and adjacent properties. (Coordinate with District Construction for selection and preference of linear sediment barrier BMPs.) ☒Complete

   (b) Increase the quantities by 25% for each additional rainy season. (Designated Construction Representative may suggest an alternate increase.) ☐Complete

   (c) Designate as a separate contract bid line item. ☐Complete

Perimeter Controls - Run-on Control

2. Do locations exist where sheet flow upslope of the project site and where concentrated flow upstream of the project site may contact DSA and construction activities? ☐Yes ☒No

   (a) Utilize linear sediment barriers such as SS-9 (Earth Dike/Drainage Swales and Lined Ditches), SC-5 (Fiber Rolls), SC-6 (Gravel Bag Berm), SC-8 (Sand Bag Barrier), SC-9 (Straw Bale Barrier), or other BMPs to convey flows through and/or around the project site. (Coordinate with District Construction for selection and preference of perimeter control BMPs.) ☐Complete

   (b) Designate as a separate contract bid line item. ☐Complete

Storm Drain Inlets

3. Do existing or proposed drainage inlets exist within the project limits? ☒Yes ☐No

   (a) Select **SC-10** (Storm Drain Inlet Protection) to protect municipal storm drain systems or receiving waters wetlands at each drainage inlet. (Coordinate with District Construction for selection and preference of inlet protection BMPs.) ☒Complete

   (b) Designate as a separate contract bid line item. ☒Complete

4. Can existing or proposed drainage inlets utilize an excavated sediment trap as described in SC-10 (Storm Drain Inlet Protection- Type 2)? ☐Yes ☐No

   (a) Include with other types of SC-10 (Storm Drain Inlet Protection). ☐Complete

Sediment/Desilting Basin (SC-2)

5. Does the project lie within a Rainfall Area where the required combination of temporary soil stabilization and sediment control BMPs includes desilting basins? (Refer to Tables 2-1, 2-2, and 2-3 of the Construction Site Best Management Practices Manual for Rainfall Area requirements.) ☐Yes ☒No

   (a) Consider feasibility for desilting basin allowing for available right-of-way within the project limits, topography, soil type, disturbed soil area within the watershed, and climate conditions. Document if the inclusion of sediment/desilting basins is infeasible. ☐Complete

   (b) If feasible, design desilting basin(s) per the guidance in SC-2 Sediment/ Desilting Basins of the Construction Site BMP Manual to maximize capture of sediment-laden runoff. ☐Complete

   Designate as a separate contract bid item. ☐Complete

6. Is ATS to be used for controlling sediment? ☐Yes ☒No

   (a) If "yes", then will desilting basin or other means of natural storage be used? ☐Yes ☐No

   (b) If "no", then plan for storage tanks sufficient to hold treatment volume. ☐Comple

7. Will the project benefit from the early implementation of proposed permanent Treatment BMPs? (Coordinate with District Construction.) ☐Yes ☒No

   (a) Edit Order of Work specifications for permanent treatment BMP work to be implemented in a manner that will allow its use as a construction site BMP. ☐Complete

Sediment Trap (SC-3)

8. Can sediment traps be located to collect channelized runoff from disturbed soil areas prior to discharge? ☐Yes ☒No

   (a) Design sediment traps in accordance with the Construction Site BMP Manual. ☐Complete

   (b) Designate as a separate contract bid line item. ☐Complete

Construction Site BMPs
Checklist CS-1, Part 3

Prepared by: Armand Rubio Date: 07/12/2011 District-Co-Route: 08-SBd-15

PM : R14.2/29.8 Project ID (or EA): 0800020456 (0Q740K) RWQCB: Santa Ana & Lahontan

Tracking Controls

Stabilized Construction Entrance/Exit (TC-1)

1. Are there points of entrance and exit from the project site to paved roads where mud and dirt could be transported offsite by construction equipment? (Coordinate with District Construction for selection and preference of tracking control BMPs.) ☐Yes ☒No

   (a) Identify and designate these entrance/exit points as stabilized construction entrances (TC-1). ☐Complete

   (b) Designate as a separate contract bid line item. ☐Complete

Tire/Wheel Wash (TC-3)

1. Are site conditions anticipated that would require additional or modified tracking controls such as entrance/outlet tire wash? (Coordinate with District Construction.) ☐Yes ☒No

   Designate as a separate contract bid line item. ☐Complete

Stabilized Construction Roadway (TC-2)

3. Are temporary access roads necessary to access remote construction activity locations or to transport materials and equipment? (In addition to controlling dust and sediment tracking, access roads limit impact to sensitive areas by limiting ingress, and provide enhanced bearing capacity.) (Coordinate with District Construction.) ☐Yes ☒No

   (a) Designate these temporary access roads as stabilized construction roadways (TC-2). ☐Complete

   (b) Designate as a separate contract bid line item. ☐Complete

Street Sweeping and Vacuuming **(SC-7)**

1. Is there a potential for tracked sediment or construction related residues to be transported offsite and deposited on public or private roads? (Coordinate with District Construction for preference of including street sweeping and vacuuming with tracking control BMPs.) ☐Yes ☒No

   Designate as a separate contract bid line item. ☐Complete

Construction Site BMPs
Checklist CS-1, Part 4

Prepared by: Armand Rubio Date: 07/12/2011 District-Co-Route: 08-SBd-15

PM : R14.2/29.8 Project ID (or EA): 0800020456 (0Q740K) RWQCB: Santa Ana & Lahontan

Wind Erosion Controls

Wind Erosion Control (WE-1)

1. Is the project located in an area where standard dust control practices in accordance with Standard Specifications, Section 10: Dust Control, are anticipated to be inadequate during construction to prevent the transport of dust offsite by wind? *(Note: Dust control by water truck application is paid for through the various items of work. Dust palliative, if it is included, is paid for as a separate item.)* ☐Yes ☒No

   (a) Select SS-3 (Hydraulic Mulch), SS-4 (Hydroseeding), SS-5 (Soil Binders), SS-7 (Geotextiles, Mats, Plastic Covers, and Erosion Control Blankets), SS-8 (Wood Mulching) or a combination to cover the DSA subject to wind erosion year-round, especially when significant wind and dry conditions are anticipated during project construction. (Coordinate with District Construction for selection and preference of wind erosion control BMPs.) ☐Complete

   (b) Designate as a separate contract bid line item. ☐Complete

Construction Site BMPs
Checklist CS-1, Part 5

Prepared by: Armand Rubio Date: 07/12/2011 District-Co-Route: 08-SBd-15

PM : R14.2/29.8 Project ID (or EA): 0800020456 (Q740K) RWQCB: Santa Ana & Lahontan

Non-Storm Water Management

Temporary Stream Crossing (NS-4) & *Clear Water Diversion* (NS-5)

1. Will construction activities occur within a waterbody or watercourse such as a lake, wetland, or stream? (Coordinate with District Construction for selection and preference for stream crossing and clear water diversion BMPs.) ☐Yes ☒No

   (a) Select from types offered in NS-4 (Temporary Stream Crossing) to provide access through watercourses consistent with permits and agreements.[1] ☐Complete

   (b) Select from types offered in NS-5 (Clear Water Diversion) to divert watercourse consistent with permits and agreements.[1] ☐Complete

   (c) Designate as a separate contract bid line item(s). ☐Complete

Other Non-Storm Water Management BMPs

2. Are construction activities anticipated that will generate wastes or residues with the potential to discharge pollutants? ☒Yes ☐No

   (a) Identify potential pollutants associated with the anticipated construction activity and select the corresponding BMP such as **NS-1 (Water Conservation Practices)**, NS-2 (Dewatering Operations), **NS-3 (Paving and Grinding Operations)**, NS-7 (Potable Water/Irrigation), **NS-8 (Vehicle and Equipment Cleaning)**, **NS-9 (Vehicle and Equipment Fueling)**, **NS-10 (Vehicle and Equipment Maintenance)**, NS-11 (Pile Driving Operations), **NS-12 (Concrete Curing)**, NS-13 (Material and Equipment Use Over Water), **NS-14 (Concrete Finishing)**, and NS-15 (Structure Demolition/Removal Over or Adjacent to Water).[1] ☒Complete

   (b) Verify that costs for non-stormwater management BMPs are identified in the contract documents. Designate BMP as a separate contract bid line item if the requirements in Construction Site Management (SSP 07-346) are anticipated to be inadequate or if requested by Construction. ☐Complete

[1] Coordinate with District Environmental for consistency with US Army Corps of Engineers 404 and 401 permits and Dept. of Fish and Game 1601 Streambed alteration Agreements.

Construction Site BMPs
Checklist CS-1, Part 6

Prepared by: Armand Rubio Date: 07/12/2011 District-Co-Route: 08-SBd-15

PM : R14.2/29.8 Project ID (or EA): 0800020456 (0Q740K) RWQCB: Santa Ana & Lahontan

Waste Management & Materials Pollution Control

Concrete Waste Management (WM-8)

1. Does the project include concrete placement or mortar mixing? ☒Yes ☐No

   (a) Select from types offered in **WM-8** (Concrete Waste Management) to provide concrete washout facilities. In addition, consider portable concrete washouts and vendor supplied concrete waste management services. (Coordinate with District Construction for selection and preference of waste management and materials pollution control BMPs.) ☒Complete

   (b) Designate as a separate contract bid line item if the quantity of concrete waste and washout are anticipated to exceed 5.2 yd^3 or if requested by Construction. ☐Complete

Other Waste Management and Materials Pollution Controls

2. Are construction activities anticipated that will generate wastes or residues with the potential to discharge pollutants? ☒Yes ☐No

   (a) Identify potential pollutants associated with the anticipated construction activity and select the corresponding BMP such as **WM-1 (Material Delivery and Storage)**, **WM-2 (Material Use)**, **WM-4 (Spill Prevention and Control)**, **WM-5 (Solid Waste Management)**, WM-6 (Hazardous Waste Management), WM-7 (Contaminated Soil Management), **WM-9 (Sanitary/Septic Waste Management)** and WM-10 (Liquid Waste Management) ☒Complete

   (b) Verify that costs for waste management and materials pollution control BMPs are identified in the contract documents. Designate BMP as a separate contract bid line item if the requirements in Construction Site Management (SSP 07-346) are anticipated to be inadequate or if requested by Construction. ☐Complete

Temporary Stockpiles (Soil, Materials, and Wastes)

3. Are stockpiles of soil, etc. anticipated during construction? ☒Yes ☐No

   (a) Select **WM-3 (Stockpile Management),** SS-3 (Hydraulic Mulch), SS-4 (Hydroseeding), SS-5 (Soil Binders), SS-7 (Geotextiles, Mats, Plastic Covers, and Erosion Control Blankets), or a combination as appropriate to cover temporary stockpiles of soil, etc. ☒Complete

(b) Select linear sediment barrier such as SC-1 (Silt Fence), SC-5 (Fiber Rolls), SC-6 (Gravel Bag Berm), SC-8 (Sand Bag Barrier), SC-9 (Straw Bale Barrier), or a combination to encircle temporary stockpiles of soil, etc. (Coordinate with District Construction for selection and preference of BMPs related to stockpiles.) ☐Complete

(c) Designate as a separate contract bid line item if the requirements in Construction Site Management (SSP 07-346) are anticipated to be inadequate or if requested by Construction. ☐Complete

4. Is there a potential for dust and debris from construction material (fill material, etc.) and waste (concrete, contaminated soil, etc.) stockpiles to be transported offsite by wind? ☒Yes ☐No

(a) Select **SS-7**, temporary cover, plastic sheeting or other BMP to cover stockpiles subject to wind erosion year-round, especially when significant wind and dry conditions are anticipated during project construction. (Coordinate with District Construction for selection and preference of wind erosion control BMPs.) ☒Complete

(b) Designate as a separate contract bid line item. ☒Complete