| DIST. | COUNTY | ROUTE | KILOMETER POST TOTAL PROJECT | SHEET NO. | TOTAL SHEETS |
|---|---|---|---|---|---|
| | | | | | |

REGISTERED ENGINEER - CIVIL

PLANS APPROVAL DATE

REGISTERED PROFESSIONAL ENGINEER No. Exp. CIVIL STATE OF CALIFORNIA

*The State of California or its officers or agents shall not be responsible for the accuracy or completeness of electronic copies of this plan sheet.*

Caltrans Metric

| SLANTED POST OFFSET | |
|---|---|
| DIMENSION \ RADIUS | 3.66 |
| "X" | 3.02 |
| "Y" | 3.60 |
| "Z" = "W" x .17632698 | |

## MAST ARM QUANTITIES

| POST # | PIPE SPEC (NPS) | SPLICE PLATE (kg) 2 EA SPLICE | BOLT & NUTS SET (kg) | 6.4 mm END PLATE FOR CANTILEVER (kg) | 19 mm square bar on mast arm (kg/m) | Kg/m |
|---|---|---|---|---|---|---|
| I | Pipe 20x9.5 tk | 153 | 17 | 20 | 2.842 kg/m | 117.0 |
| II | Pipe 24x9.5 tk | 362 | 36 | 20 | | 140.8 |
| III | Pipe 24x9.5 tk | 362 | 36 | 27 | | 140.8 |
| IV | Pipe 30x9.5 tk | 606 | 52 | 39 | | 176.7 |
| V | Pipe 30x9.5 tk | 606 | 52 | 39 | | 176.7 |
| VI | Pipe 30x9.5 tk | 606 | 52 | 39 | | 176.7 |

## MOUNTING BRACKET ASSEMBLY QUANTITIES (kgs)

| POST # | PIPE SPEC (NPS) | CLAMP ASSEMBLY (BEHIND THE PANELS) INCLUDE WT102x29.7 kg/m, RODS, 6.4 mm TRIANGULAR PLATE | MOUNTING BRACKET (INCLUDE VERTICAL CHANNEL C130x10 kg/m, HORIZONTAL W130x24 kg/m, BOLTS & NUTS) DEPTH OF SIGN PANEL, mm | | | | | | GUSSET SUPPORT AT ELBOW |
|---|---|---|---|---|---|---|---|---|---|
| | | | 1778 | 2032 | 2286 | 2540 | 2794 | 3048 | |
| I | Pipe 20x12.7 tk | 33 | 45 | 47 | 50 | 53 | 55 | 58 | 4 |
| II | Pipe 24x12.7 tk | 35 | 45 | 47 | 50 | 53 | 55 | 58 | 4 |
| III | Pipe 24x15.9 tk | 35 | 45 | 47 | 50 | 53 | 55 | 58 | 4 |
| IV | Pipe 30x12.7 tk | 39 | 45 | 47 | 50 | 53 | 55 | 58 | 4 |
| V | Pipe 30x15.9 tk | 39 | 45 | 47 | 50 | 53 | 55 | 58 | 4 |
| VI | Pipe 30x19.05 tk | 39 | 45 | 47 | 50 | 53 | 55 | 58 | 4 |

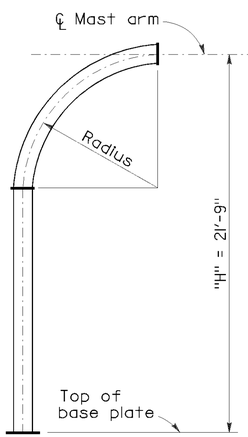


VERTICAL POST

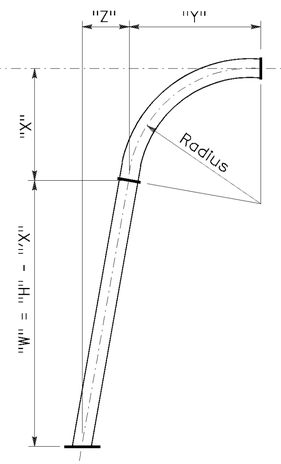


SLANTED POST

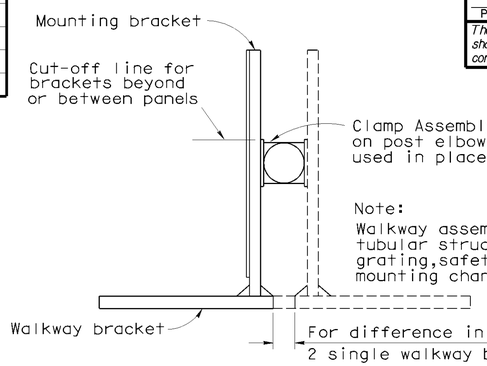


Note:
Walkway assembly which weighs 111.6 kg/m for tubular structure only and consists of walkway grating,safety angle, railing and light fixture mounting channels, not shown

*** Mounting bracket assembly includes mounting bracket, walkway bracket and connection hardware. Structures which are painted have walkway brackets, and walkway assembly which are galvanized.

## SLANTED POST QUANTITIES (kg)

| POST # | PIPE SPEC (NPS) | RADIUS (m) | kg/m | HEIGHT (m) FROM BASE PLATE TO CENTER OF MAST ARM | | | | |
|---|---|---|---|---|---|---|---|---|
| | | | | 6.40 | 7.01 | 7.62 | 8.23 | 8.84 |
| I | Pipe 20x12.7 tk | 3.66 | 154.9 | 1325 | 1421 | 1518 | 1614 | 1710 |
| II | Pipe 24x12.7 tk | 3.66 | 186.7 | 1597 | 1714 | 1830 | 1945 | 2061 |
| III | Pipe 24x15.9 tk | 3.66 | 232.1 | 1985 | 2130 | 2274 | 2418 | 2562 |
| IV | Pipe 30x12.7 tk | 3.66 | 234.5 | 2006 | 2152 | 2298 | 2443 | 2588 |
| V | Pipe 30x15.9 tk | 3.66 | 291.6 | 2495 | 2676 | 2857 | 3038 | 3219 |
| VI | Pipe 30x19.05 tk | 3.66 | 348.1 | 2978 | 3195 | 3411 | 3627 | 3843 |

## VERTICAL POST QUANTITIES (kg)

| POST # | PIPE SPEC (NPS) | RADIUS (m) | kg/m | HEIGHT (m) FROM BASE PLATE TO CENTER OF MAST ARM | | | | |
|---|---|---|---|---|---|---|---|---|
| | | | | 6.40 | 7.01 | 7.62 | 8.23 | 8.84 |
| I | Pipe 20x12.7 tk | 3.66 | 154.9 | 1318 | 1412 | 1507 | 1602 | 1696 |
| II | Pipe 24x12.7 tk | 3.66 | 186.7 | 1589 | 1703 | 1817 | 1931 | 2045 |
| III | Pipe 24x15.9 tk | 3.66 | 232.1 | 1975 | 2117 | 2258 | 2400 | 2542 |
| IV | Pipe 30x12.7 tk | 3.66 | 234.5 | 1995 | 2138 | 2282 | 2425 | 2568 |
| V | Pipe 30x15.9 tk | 3.66 | 291.6 | 2481 | 2659 | 2838 | 3016 | 3194 |
| VI | Pipe 30x19.05 tk | 3.66 | 348.1 | 2962 | 3175 | 3388 | 3600 | 3813 |

| BASE PLATE | |
|---|---|
| POST # | WT (kg) |
| I | 327 |
| II | 404 |
| III | 404 |
| IV | 534 |
| V | 534 |
| VI | 641 |

| GUSSETS AT BASE | |
|---|---|
| POST # | WT (kg) |
| I | 68 |
| II | 68 |
| III | 68 |
| IV | 82 |
| V | 82 |
| VI | 82 |

| WT OF ANCHOR BOLTS W/NUT A307 | |
|---|---|
| POST # | kg @ EA POST TOTAL WT BOLTS & NUTS |
| I | 354 |
| II | 452 |
| III | 452 |
| IV | 517 |
| V | 517 |
| VI | 517 |

Example 1:

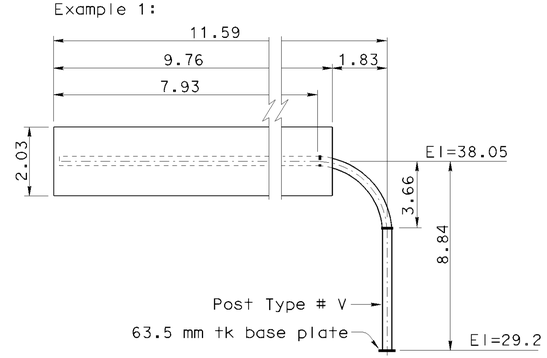


| | |
|---|---|
| Anchor bolts A307, bolts & nuts | = 517 kg |
| Base plate | = 534 kg |
| Gussets at post & base plate | = 82 kg |
| Post: Use table "STRAIGHT POST QUANTITIES", post V data Right side: post V = 3194 - (pipe length for 63.5 mm tk base plate) = 3194 - (63.5/1000) x 292 | = 3176 kg |
| Mast arm: | |
| Length of mast arm | = 7.93 m |
| Weight = 7.93 m x 176.7 kg/m | = 1401 kg |
| Splice plate 2 each | = 606 kg |
| Bolts & nuts | = 52 kg |
| End plate for cantilever | = 39 kg |
| 19 mm square bar on mast arm = 7.93 m x 2.842 kg/m | = 23 kg |
| Mounting bracket assemblies: | |
| No. of bracket = (11.59-1.83)/1.67 = 6 + 1 | = 7 brackets |
| Clamp assembly | = 234 kg |
| Mounting brackets | = 329 kg |
| Gusset support at elbow | = 4 kg |
| Walkway assembly: | |
| Total weight (9.76 m x 111.6 kg/m) | = 1089 kg |
| Subtotal: | = 8086 kg |
| Galvanized structure + 3.5% | = 283 kg |
| Total weight: | = 8369 kg |

Example 2:

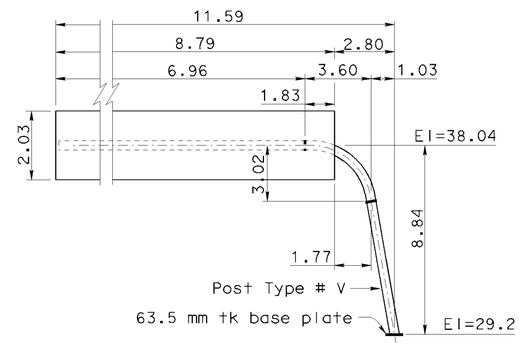


| | |
|---|---|
| Anchor bolts A307, bolts & nuts | = 517 kg |
| Base plate | = 534 kg |
| Gussets at post & base plate | = 82 kg |
| Post: Use table "SLANTED POST QUANTITIES", post V data Right side: post V = 3219 - (pipe length for 63.5 mm tk base plate) = 3219 - (63.5/1000) x 292 | = 3201 kg |
| Mast arm: | |
| Length of mast arm | = 6.96 m |
| Weight = 6.96 m x 176.7 kg/m | = 1230 kg |
| Splice plate 2 each | = 606 kg |
| Bolts & nuts | = 52 kg |
| End plate for cantilever | = 39 kg |
| 19 mm square bar on mast arm = 6.96 m x 2.842 kg/m | = 20 kg |
| Mounting bracket assemblies: | |
| No. of bracket = (11.59-2.80)/1.67 = 6 + 1 | = 7 brackets |
| Clamp assembly | = 234 kg |
| Mounting brackets | = 329 kg |
| Gusset support at elbow | = 4 kg |
| Walkway assembly: | |
| Total weight (8.79 m x 111.6 kg/m) | = 981 kg |
| Subtotal: | = 7829 kg |
| Galvanized structure + 3.5% | = 274 kg |
| Total weight: | = 8103 kg |

ALL DIMENSIONS ARE IN METER UNLESS OTHERWISE SHOWN

**THIS SHEET NOT A PART OF CONTRACT PLANS**

**OVERHEAD SIGNS - TUBULAR SINGLE POST TYPE**

**QUANTITIES** | **16**