DIST	COUNTY	ROUTE	POST MILES TOTAL PROJECT	SHEET No.	TOTAL SHEETS
X	X	X	X	X	X

REGISTERED CIVIL ENGINEER X DATE

PLANS APPROVAL DATE

REGISTERED PROFESSIONAL ENGINEER X No. X Exp. X CIVIL STATE OF CALIFORNIA

The State of California or its officers or agents shall not be responsible for the accuracy or completeness of electronic copies of this plan sheet.

The contractor must verify all controlling field dimensions before ordering or fabricating any material.

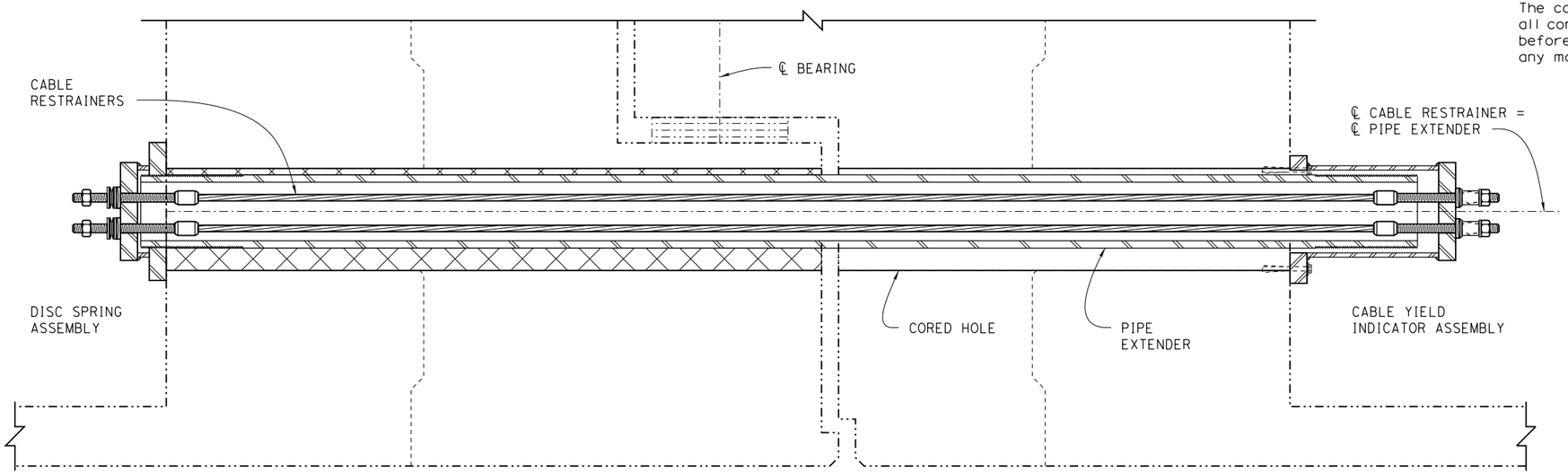

HINGE SEAT SIDE

SUPPORTED SIDE

CABLE RESTRAINERS WITH PIPE SEAT EXTENDER ELEVATION

1½" = 1'-0"

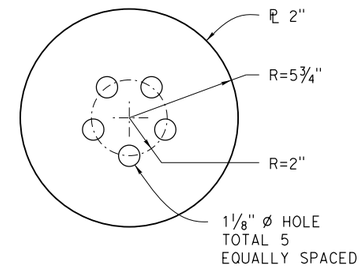

BEARING PLATE

3" = 1'-0"

Notes:

1. The Pipe extender must be Pipe 8 xx-Strong. For Hole, Pipe Extender and Threaded Plate details see: XS7-081, "Pipe Extender/Shear Key Details (Retrofit)" sheet.
2. For Cable Restrainer and Hardware details see: XS7-090, "Cable Restrainer Hardware Details" sheet.

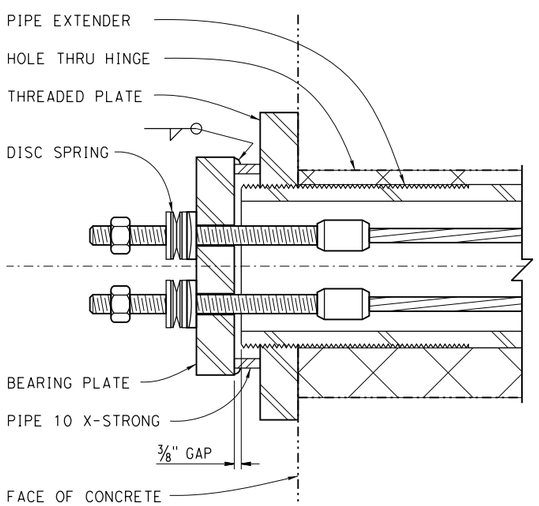

DISC SPRING ASSEMBLY

3" = 1'-0"

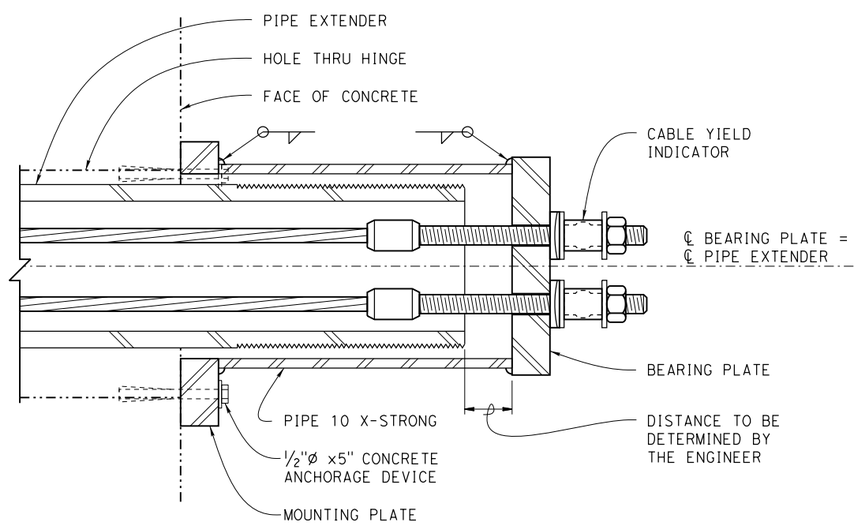

CABLE YIELD INDICATOR ASSEMBLY

3" = 1'-0"

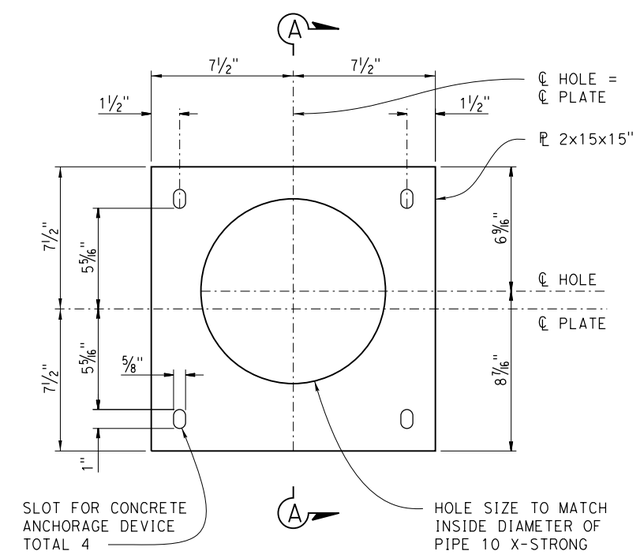

MOUNTING PLATE

3" = 1'-0"

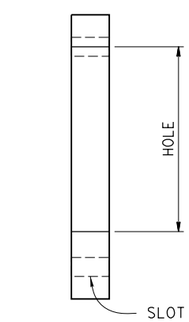

SECTION A-A

STANDARD DRAWING		NOTES TO DESIGNER	STATE OF CALIFORNIA DEPARTMENT OF TRANSPORTATION	DIVISION OF ENGINEERING SERVICES	BRIDGE NO. X / POST MILE X	X
FILE NO. xs7-071	APPROVAL DATE July 2014	Remove these notes at PS&E				RESTRAINER DETAILS FOR PIPE EXTENDER/SHEAR KEY (RETROFIT)

- "THREADED PLATE FOR FUTURE USE" on xs7-040 is not required when Cable Restrainers are used.

DS OSD 2147A (ENGLISH STANDARD DRAWING "XS" BORDER REV. (02-02-11)

ORIGINAL SCALE IN INCHES FOR REDUCED PLANS 0 1 2 3

UNIT: X
PROJECT NUMBER & PHASE: X
CONTRACT NO.: X

DISREGARD PRINTS BEARING EARLIER REVISION DATES

REVISION DATES				SHEET	OF
4-19-14				X	X

FILE => $REQUEST

USERNAME => $USER DATE PLOTTED => $DATE TIME PLOTTED => $TIME