| DIST | COUNTY | ROUTE | POST MILES TOTAL PROJECT | SHEET No. | TOTAL SHEETS |
|---|---|---|---|---|---|
| X | X | X | X | X | X |

REGISTERED CIVIL ENGINEER X DATE

PLANS APPROVAL DATE

REGISTERED PROFESSIONAL ENGINEER X No. X Exp. X CIVIL STATE OF CALIFORNIA

*The State of California or its officers or agents shall not be responsible for the accuracy or completeness of electronic copies of this plan sheet.*

## FOOTING DETAILS - FOR CULVERTS WITH FOOTINGS ON SOIL

| SPAN, S | | 12′ | | | | | | | | | | | |
|---|---|---|---|---|---|---|---|---|---|---|---|---|---|
| WALL HEIGHT, H | | 6′ | | 8′ | | 10′ | | 12′ | | 14′ | | 15′ | |
| Max Earth Cover | | 10′ | 20′ | 10′ | 20′ | 10′ | 20′ | 10′ | 20′ | 10′ | 20′ | 10′ | 20′ |
| Depth - X | | 1′-9" | 2′-0" | 1′-9" | 2′-0" | 1′-9" | 2′-0" | 1′-9" | 2′-0" | 1′-9" | 2′-0" | 1′-9" | 2′-0" |
| Width - Y | | 5′-0" | 6′-0" | 5′-0" | 6′-0" | 5′-0" | 6′-0" | 5′-0" | 6′-0" | 5′-0" | 6′-0" | 5′-0" | 6′-0" |
| "f" | Bar size | #6 | #6 | #6 | #6 | #6 | #6 | #6 | #6 | #6 | #6 | #6 | #6 |
| | Bar Spacing | 12" | 12" | 12" | 12" | 12" | 12" | 12" | 12" | 12" | 12" | 12" | 12" |
| * Soil Pressure, qu (ksf) | | 5.17 | 7.93 | 5.39 | 8.17 | 5.84 | 8.53 | 6.35 | 9.03 | 7.05 | 9.75 | 7.43 | 10.11 |
| Effective Footing Width, B′ (ft) | | 3.47 | 4.20 | 3.45 | 4.18 | 3.43 | 4.17 | 3.42 | 4.17 | 3.41 | 4.17 | 3.41 | 4.17 |

| SPAN, S | | 14′ | | | | | | | | | | | |
|---|---|---|---|---|---|---|---|---|---|---|---|---|---|
| WALL HEIGHT, H | | 6′ | | 8′ | | 10′ | | 12′ | | 14′ | | 15′ | |
| Max Earth Cover | | 10′ | 20′ | 10′ | 20′ | 10′ | 20′ | 10′ | 20′ | 10′ | 20′ | 10′ | 20′ |
| Depth - X | | 1′-9′ | 2′-6" | 2′-0" | 2′-6" | 2′-0" | 2′-6" | 2′-0" | 2′-6" | 2′-0" | 2′-6" | 2′-0" | 2′-6" |
| Width - Y | | 5′-0" | 6′-0" | 5′-0" | 6′-0" | 5′-0" | 6′-6" | 5′-0" | 6′-6" | 5′-0" | 6′-6" | 5′-0" | 7′-0" |
| "f" | Bar size | #6 | #6 | #6 | #6 | #6 | #6 | #6 | #6 | #6 | #6 | #6 | #6 |
| | Bar Spacing | 12" | 12" | 12" | 12" | 12" | 12" | 12" | 12" | 12" | 12" | 12" | 12" |
| * Soil Pressure, qu (ksf) | | 5.76 | 10.37 | 6.57 | 10.75 | 7.04 | 9.79 | 7.61 | 10.32 | 8.38 | 11.02 | 8.76 | 10.30 |
| Effective Footing Width, B′ (ft) | | 3.48 | 3.71 | 3.20 | 3.69 | 3.19 | 4.17 | 3.17 | 4.16 | 3.16 | 4.16 | 3.16 | 4.66 |

| SPAN, S | | 16′ | | | | | | | | | | | |
|---|---|---|---|---|---|---|---|---|---|---|---|---|---|
| WALL HEIGHT, H | | 6′ | | 8′ | | 10′ | | 12′ | | 14′ | | 15′ | |
| Max Earth Cover | | 10′ | 20′ | 10′ | 20′ | 10′ | 20′ | 10′ | 20′ | 10′ | 20′ | 10′ | 20′ |
| Depth - X | | 2′-0" | 2′-6" | 2′-0" | 2′-6" | 2′-0" | 2′-6" | 2′-0" | 2′-6" | 2′-0" | 2′-6" | 2′-0" | 2′-6" |
| Width - Y | | 5′-6" | 7′-0" | 5′-6" | 7′-0" | 5′-6" | 7′-0" | 5′-6" | 7′-0" | 5′-6" | 7′-0" | 5′-6" | 7′-0" |
| "f" | Bar size | #6 | #6 | #6 | #6 | #6 | #6 | #6 | #6 | #6 | #6 | #6 | #6 |
| | Bar Spacing | 12" | 12" | 12" | 12" | 12" | 12" | 12" | 12" | 12" | 12" | 12" | 12" |
| * Soil Pressure, qu (ksf) | | 6.13 | 9.25 | 6.41 | 9.41 | 6.73 | 9.73 | 7.30 | 10.29 | 7.87 | 10.95 | 8.32 | 11.30 |
| Effective Footing Width, B′ (ft) | | 3.75 | 4.74 | 3.72 | 4.72 | 3.71 | 4.71 | 3.69 | 4.70 | 3.68 | 4.70 | 3.68 | 4.69 |

| SPAN, S | | 18′ | | | | | | | | | | | |
|---|---|---|---|---|---|---|---|---|---|---|---|---|---|
| WALL HEIGHT, H | | 6′ | | 8′ | | 10′ | | 12′ | | 14′ | | 15′ | |
| Max Earth Cover | | 10′ | 20′ | 10′ | 20′ | 10′ | 20′ | 10′ | 20′ | 10′ | 20′ | 10′ | 20′ |
| Depth - X | | 2′-0" | 2′-6" | 2′-0" | 2′-6" | 2′-0" | 2′-6" | 2′-0" | 2′-6" | 2′-0" | 2′-6" | 2′-0" | 2′-6" |
| Width - Y | | 5′-6" | 7′-6" | 5′-6" | 7′-6" | 5′-6" | 7′-6" | 5′-6" | 8′-0" | 5′-6" | 8′-0" | 5′-6" | 8′-0" |
| "f" | Bar size | #6 | #7 | #6 | #7 | #5 | #7 | #5 | #7 | #5 | #7 | #5 | #7 |
| | Bar Spacing | 12" | 12" | 12" | 12" | 12" | 12" | 12" | 12" | 12" | 12" | 12" | 12" |
| * Soil Pressure, qu (ksf) | | 6.77 | 9.34 | 6.96 | 9.49 | 7.40 | 9.84 | 7.88 | 9.30 | 8.59 | 9.98 | 8.97 | 10.20 |
| Effective Footing Width, B′ (ft) | | 3.76 | 5.27 | 3.74 | 5.25 | 3.72 | 5.24 | 3.71 | 5.73 | 3.70 | 5.73 | 3.70 | 5.72 |

| SPAN, S | | 20′ | | | | | | | | | | | |
|---|---|---|---|---|---|---|---|---|---|---|---|---|---|
| WALL HEIGHT, H | | 6′ | | 8′ | | 10′ | | 12′ | | 14′ | | 15′ | |
| Max Earth Cover | | 10′ | 20′ | 10′ | 20′ | 10′ | 20′ | 10′ | 20′ | 10′ | 20′ | 10′ | 20′ |
| Depth - X | | 2′-6" | 3′-0" | 2′-6" | 3′-0" | 2′-6" | 3′-0" | 2′-6" | 3′-0" | 2′-6" | 3′-0" | 2′-6" | 3′-0" |
| Width - Y | | 6′-0" | 8′-0" | 6′-0" | 8′-0" | 6′-0" | 8′-0" | 6′-0" | 8′-6" | 6′-0" | 8′-6" | 6′-0" | 8′-6" |
| "f" | Bar size | #6 | #7 | #6 | #7 | #6 | #7 | #6 | #7 | #6 | #7 | #6 | #7 |
| | Bar Spacing | 12" | 12" | 12" | 12" | 12" | 12" | 12" | 12" | 12" | 12" | 12" | 12" |
| * Soil Pressure, qu (ksf) | | 7.58 | 10.46 | 7.79 | 10.76 | 8.13 | 11.01 | 8.76 | 10.48 | 9.45 | 10.99 | 9.88 | 11.29 |
| Effective Footing Width, B′ (ft) | | 3.77 | 5.28 | 3.74 | 5.27 | 3.72 | 5.25 | 3.70 | 5.73 | 3.69 | 5.73 | 3.69 | 5.72 |

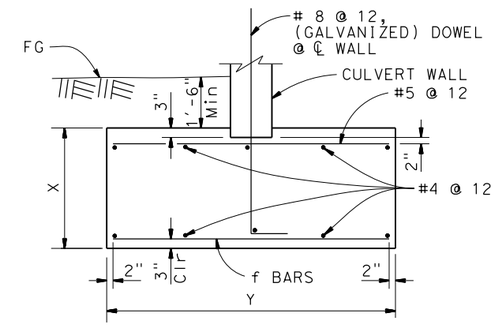


FOUNDATION - FOOTING

(Footing on Soil)

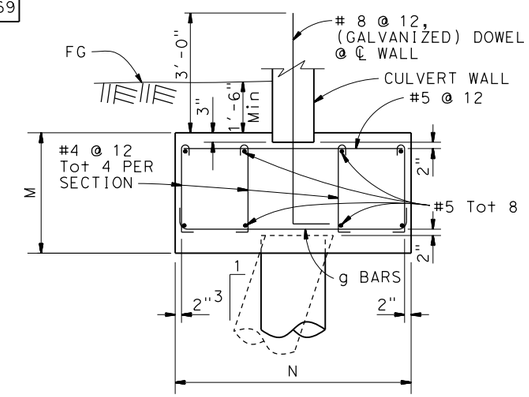


SINGLE PILE CAP SECTION X-X

NO SCALE

## PILE & PILE CAP DETAILS - FOR CULVERTS WITH PILES OR FOOTINGS ON ROCK

| SPAN, S | | 12′ | | | | | | | | | | | |
|---|---|---|---|---|---|---|---|---|---|---|---|---|---|
| WALL HEIGHT, H | | 6′ | | 8′ | | 10′ | | 12′ | | 14′ | | 15′ | |
| Max Earth Cover | | 10′ | 20′ | 10′ | 20′ | 10′ | 20′ | 10′ | 20′ | 10′ | 20′ | 10′ | 20′ |
| Number of Rows | | 1 | 2 | 1 | 2 | 2 | 2 | 2 | 2 | 2 | 2 | 2 | 2 |
| Pile Spacing | | 12′-0" | 12′-0" | 7′-3" | 8′-9" | 9′-9" | 6′-3" | 7′-6" | 4′-9" | 5′-9" | 3′-9" | 5′-3" | 3′-6" |
| Cap Depth - M | | 2′-6" | 3′-0" | 2′-6" | 3′-0" | 3′-0" | 3′-0" | 3′-0" | 3′-0" | 3′-0" | 3′-0" | 3′-0" | 3′-0" |
| Cap Width - N | | 3′-0" | 7′-6" | 3′-0" | 7′-6" | 7′-6" | 6′-0" | 7′-6" | 7′-6" | 7′-6" | 7′-6" | 7′-6" | 7′-6" |
| "g" | Bar size | #6 | #7 | #6 | #7 | #7 | #7 | #7 | #7 | #7 | #7 | #7 | #7 |
| | Bar Spacing | 12" | 6" | 12" | 6" | 6" | 6" | 6" | 6" | 6" | 6" | 6" | 6" |

| SPAN, S | | 14′ | | | | | | | | | | | |
|---|---|---|---|---|---|---|---|---|---|---|---|---|---|
| WALL HEIGHT, H | | 6′ | | 8′ | | 10′ | | 12′ | | 14′ | | 15′ | |
| Max Earth Cover | | 10′ | 20′ | 10′ | 20′ | 10′ | 20′ | 10′ | 20′ | 10′ | 20′ | 10′ | 20′ |
| Number of Rows | | 1 | 2 | 1 | 2 | 2 | 2 | 2 | 2 | 2 | 2 | 2 | 2 |
| Pile Spacing | | 12′-0" | 12′-0" | 8′-0" | 9′-9" | 10′-3" | 6′-6" | 7′-6" | 5′-0" | 5′-9" | 4′-0" | 5′-3" | 3′-6" |
| Cap Depth - M | | 2′-6" | 3′-0" | 2′-6" | 3′-0" | 3′-0" | 3′-0" | 3′-0" | 3′-0" | 3′-0" | 3′-0" | 3′-0" | 3′-0" |
| Cap Width - N | | 3′-0" | 7′-6" | 3′-0" | 7′-6" | 7′-6" | 7′-6" | 7′-6" | 7′-6" | 7′-6" | 7′-6" | 7′-6" | 7′-6" |
| "g" | Bar size | #6 | #7 | #6 | #7 | #7 | #7 | #7 | #7 | #7 | #7 | #7 | #7 |
| | Bar Spacing | 12" | 6" | 12" | 6" | 6" | 6" | 6" | 6" | 6" | 6" | 6" | 6" |

| SPAN, S | | 16′ | | | | | | | | | | | |
|---|---|---|---|---|---|---|---|---|---|---|---|---|---|
| WALL HEIGHT, H | | 6′ | | 8′ | | 10′ | | 12′ | | 14′ | | 15′ | |
| Max Earth Cover | | 10′ | 20′ | 10′ | 20′ | 10′ | 20′ | 10′ | 20′ | 10′ | 20′ | 10′ | 20′ |
| Number of Rows | | 1 | 2 | 1 | 2 | 2 | 2 | 2 | 2 | 2 | 2 | 2 | 2 |
| Pile Spacing | | 12′-0" | 12′-0" | 8′-0" | 9′-9" | 10′-6" | 7′-0" | 7′-9" | 5′-3" | 6′-0" | 4′-0" | 5′-3" | 3′-6" |
| Cap Depth - M | | 2′-6" | 3′-0" | 2′-6" | 3′-0" | 3′-0" | 3′-0" | 3′-0" | 3′-0" | 3′-0" | 3′-0" | 3′-0" | 3′-0" |
| Cap Width - N | | 3′-6" | 7′-6" | 3′-6" | 7′-6" | 7′-6" | 7′-6" | 7′-6" | 7′-6" | 7′-6" | 7′-6" | 7′-6" | 7′-6" |
| "g" | Bar size | #6 | #7 | #6 | #7 | #6 | #7 | #6 | #7 | #6 | #7 | #6 | #7 |
| | Bar Spacing | 12" | 6" | 12" | 6" | 6" | 6" | 6" | 6" | 6" | 6" | 6" | 6" |

| SPAN, S | | 18′ | | | | | | | | | | | |
|---|---|---|---|---|---|---|---|---|---|---|---|---|---|
| WALL HEIGHT, H | | 6′ | | 8′ | | 10′ | | 12′ | | 14′ | | 15′ | |
| Max Earth Cover | | 10′ | 20′ | 10′ | 20′ | 10′ | 20′ | 10′ | 20′ | 10′ | 20′ | 10′ | 20′ |
| Number of Rows | | 1 | 2 | 1 | 2 | 2 | 2 | 2 | 2 | 2 | 2 | 2 | 2 |
| Pile Spacing | | 10′-9" | 11′-0" | 8′-3" | 11′-0" | 10′-6" | 7′-0" | 7′-6" | 5′-3" | 6′-0" | 4′-0" | 5′-3" | 3′-6" |
| Cap Depth - M | | 3′-0" | 3′-6" | 3′-0" | 3′-6" | 3′-6" | 3′-6" | 3′-6" | 3′-6" | 3′-6" | 3′-6" | 3′-6" | 3′-6" |
| Cap Width - N | | 4′-0" | 7′-6" | 4′-0" | 7′-6" | 7′-6" | 7′-6" | 7′-6" | 7′-6" | 7′-6" | 7′-6" | 7′-6" | 7′-6" |
| "g" | Bar size | #6 | #6 | #6 | #7 | #7 | #7 | #7 | #7 | #7 | #7 | #7 | #7 |
| | Bar Spacing | 12" | 6" | 12" | 6" | 6" | 6" | 6" | 6" | 6" | 6" | 6" | 6" |

| SPAN, S | | 20′ | | | | | | | | | | | |
|---|---|---|---|---|---|---|---|---|---|---|---|---|---|
| WALL HEIGHT, H | | 6′ | | 8′ | | 10′ | | 12′ | | 14′ | | 15′ | |
| Max Earth Cover | | 10′ | 20′ | 10′ | 20′ | 10′ | 20′ | 10′ | 20′ | 10′ | 20′ | 10′ | 20′ |
| Number of Rows | | 1 | 2 | 1 | 2 | 2 | 2 | 2 | 2 | 2 | 2 | 2 | 2 |
| Pile Spacing | | 9′-9" | 10′-0" | 8′-6" | 9′-6" | 10′-6" | 7′-9" | 7′-6" | 5′-6" | 6′-0" | 4′-3" | 5′-3" | 3′-9" |
| Cap Depth - M | | 3′-0" | 3′-6" | 3′-0" | 3′-6" | 3′-6" | 3′-6" | 3′-6" | 3′-6" | 3′-6" | 3′-6" | 3′-6" | 3′-6" |
| Cap Width - N | | 4′-0" | 7′-6" | 4′-0" | 7′-6" | 7′-6" | 7′-6" | 7′-6" | 7′-6" | 7′-6" | 7′-6" | 7′-6" | 7′-6" |
| "g" | Bar size | #6 | #7 | #6 | #7 | #7 | #7 | #7 | #7 | #7 | #7 | #7 | #7 |
| | Bar Spacing | 12" | 6" | 12" | 6" | 6" | 6" | 6" | 6" | 6" | 6" | 6" | 6" |

* - See Note 2

NOTES:

1. For pile layout,see "WALL, SLAB, & PILE DETAILS" sheet
2. Soil pressure shown in the table is equivalent uniform pressure per AASHTO LRFD

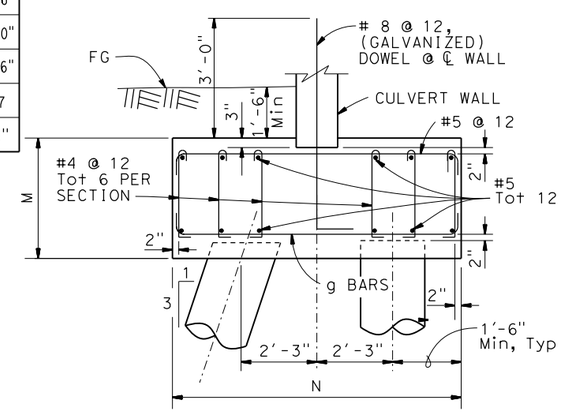


DOUBLE PILE CAP SECTION Y-Y

NO SCALE

STANDARD DRAWING

FILE NO. xs17-050-3

APPROVAL DATE July 2014

DS OSD 2147A (ENGLISH STANDARD DRAWING "XS" BORDER REV. (02-02-11)

ORIGINAL SCALE IN INCHES FOR REDUCED PLANS 0 1 2 3

STATE OF CALIFORNIA DEPARTMENT OF TRANSPORTATION

DIVISION OF ENGINEERING SERVICES

BRIDGE NO. X

POST MILE X

X

CIP BOTTOMLESS CULVERT

FOUNDATION DETAILS

UNIT: X

PROJECT NUMBER & PHASE: X

CONTRACT NO.: X

DISREGARD PRINTS BEARING EARLIER REVISION DATES

REVISION DATES 6-19-14

SHEET X OF X

FILE => $REQUEST

USERNAME => $USER DATE PLOTTED => $DATE TIME PLOTTED => $TIME