ATTACHMENT 1

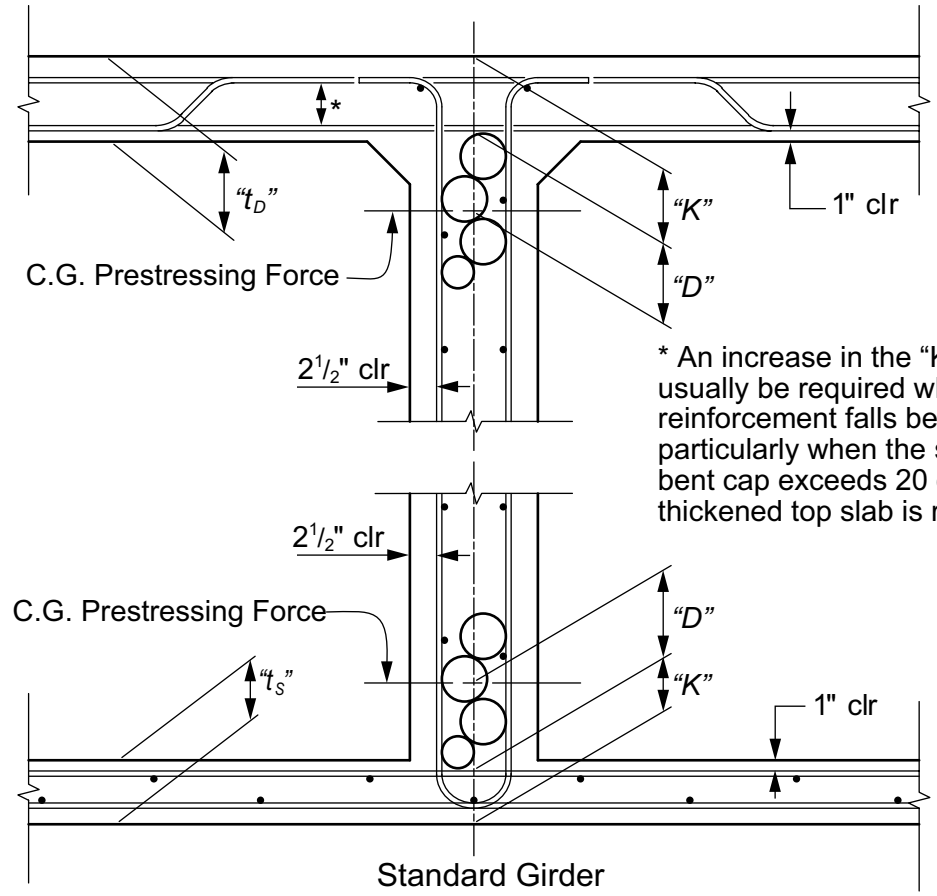

* An increase in the "K" value will usually be required when main bent cap reinforcement falls below these limits, particularly when the skew angle of the bent cap exceeds 20 degrees, and a thickened top slab is required.

Standard Girder

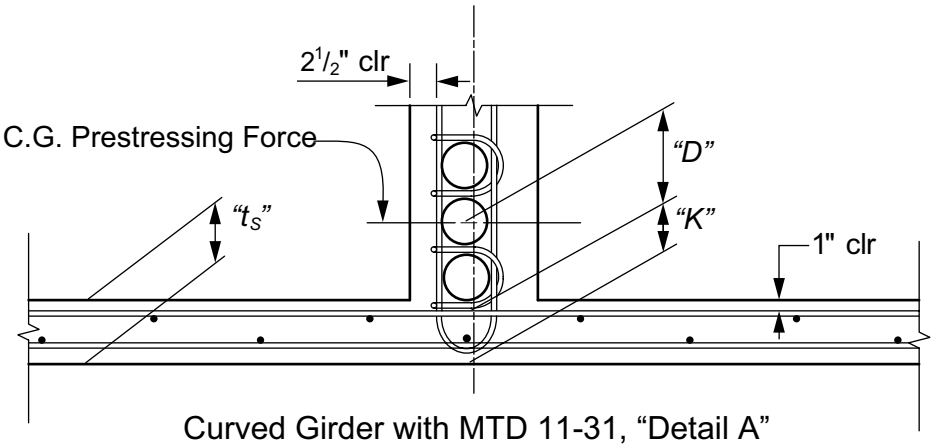

Curved Girder with MTD 11-31, "Detail A"

"K" – Varies depending on location of bottom transverse deck or bent reinforcing steel
"D" – Refer to the attached "D Chart for Cast-in-Place P/S Concrete Girders"
"t_D" – Deck Thickness
"t_S" – Soffit Thickness