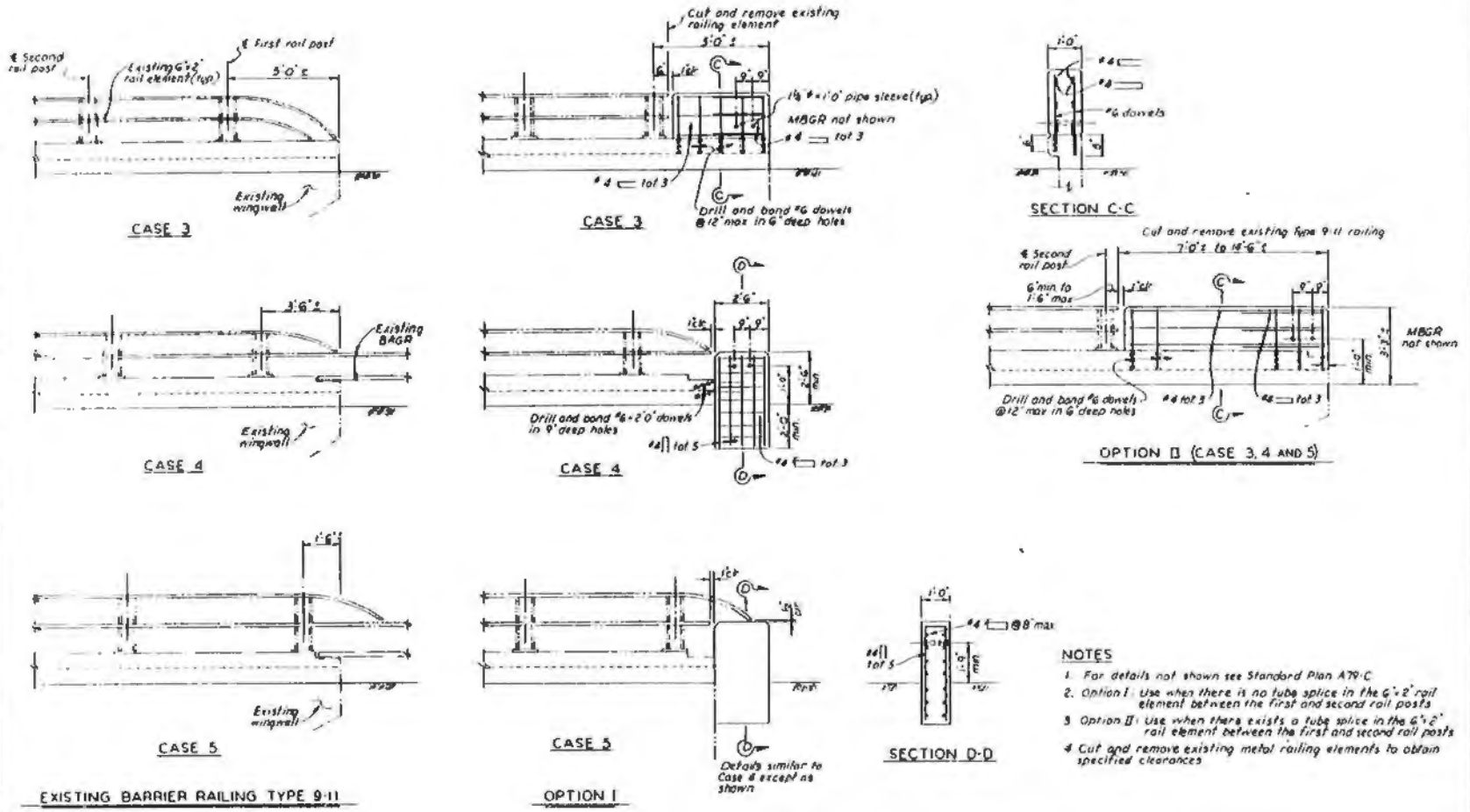

NOTES

1. For details not shown see Standard Plan A79-C
2. Option I: Use when there is no tube splice in the 6"x2" rail element between the first and second rail posts
3. Option II: Use when there exists a tube splice in the 6"x2" rail element between the first and second rail posts
4. Cut and remove existing metal railing elements to obtain specified clearances

MODIFIED M.B.G.R. CONNECTION DETAILS
BARRIER RAILING TYPE 9 & 9-11 SHEET 2 OF 2

Attachment 2