ATTACHMENT 12-7A

NOTE:
THE CONTRACTOR SHALL VERIFY ALL CONTROLLING FIELD DIMENSIONS BEFORE ORDERING OR FABRICATING ANY MATERIAL.

DIST	COUNTY	ROUTE	POST MILES TOTAL PROJECT	SHEET NO	TOTAL SHEETS
08	SBd	15			

REGISTERED CIVIL ENGINEER DATE

PLANS APPROVAL DATE

REGISTERED PROFESSIONAL ENGINEER RYAN STILTZ No. C65738 Exp. 9/30/09 CIVIL STATE OF CALIFORNIA

The State of California or its officers or agents shall not be responsible for the accuracy or completeness of electronic copies of this plan sheet.

To get to the Caltrans web site, go to: http://www.dot.ca.gov

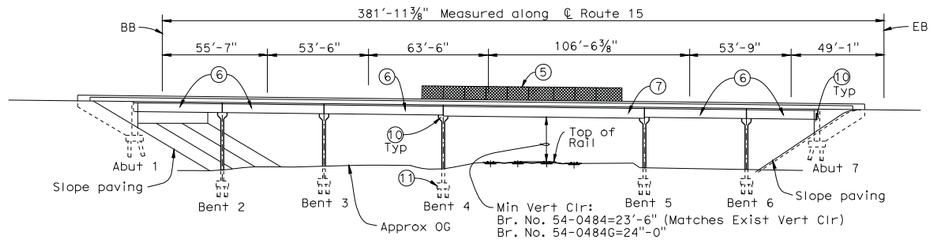

ELEVATION

1"=30"-0"

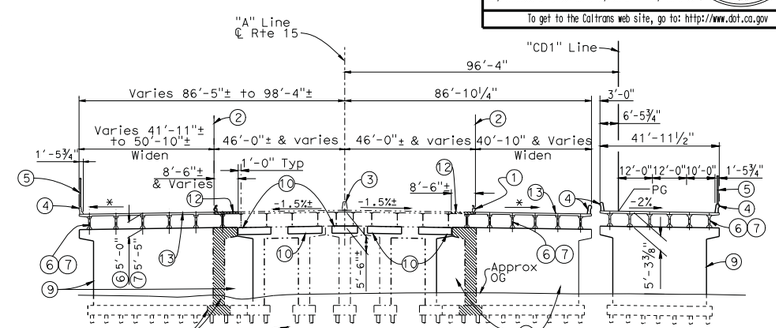

TYPICAL SECTION

1"=20"-0"

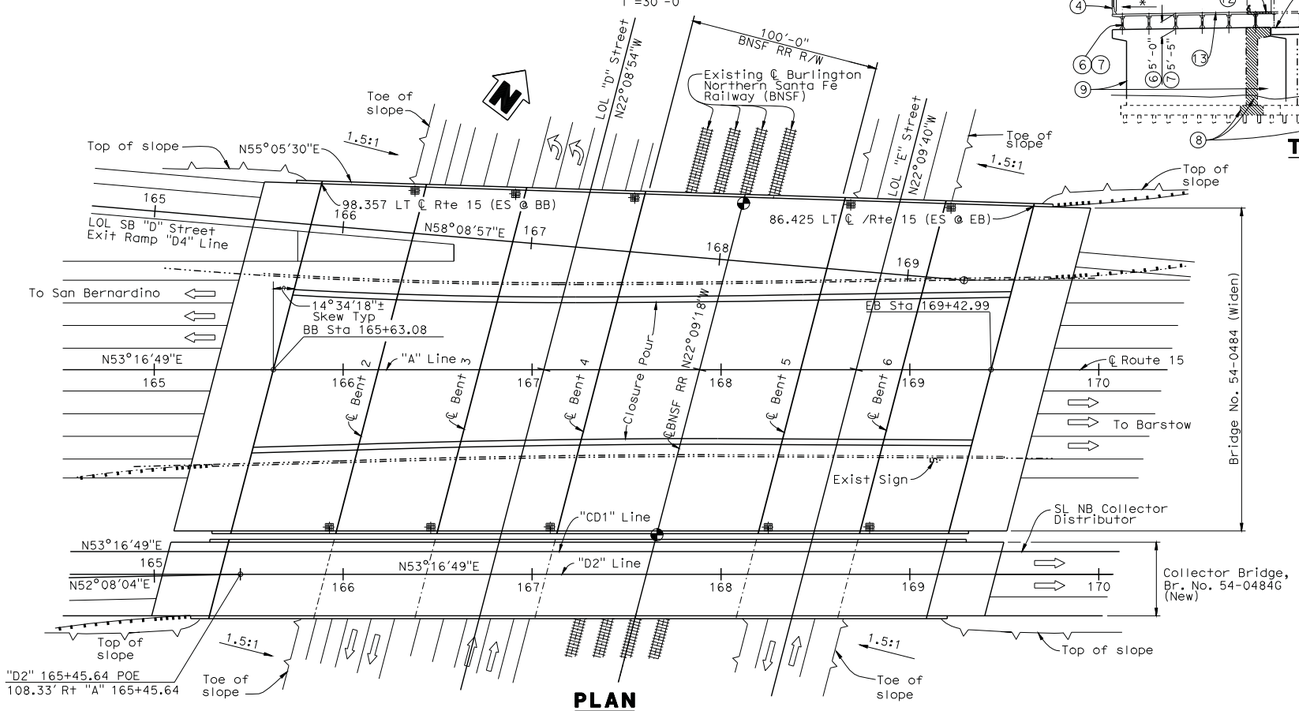

PLAN

1"=30"-0"

NOTES:

1. Remove Existing Type 9 Barrier Rail Typ.
2. Existing EOD.
3. Existing Concrete Barrier Type 60A.
4. Concrete Barrier Type 736.
5. Chain Link Railing Type 7 (Mod).
6. Precast Prestressed Conc "I" Girder, Spans 1,2,3,5,6.
7. Precast Prestressed Conc Bulb-Tee Girder, Span 4.
8. Remove Footing, Column, Bent Cap, Girder and portion of Deck.
9. Pier wall with pile footing.
10. Install Catcher Blocks under girders at each Bent and Abutment.
11. For construction of Bent 4 & Bent 5, Shoring Req'd. Bent 4 shoring shall be Zone "A" designed for RR Live Loading.
12. 3'-0" Closure Pour.

LEGEND:

- Indicates new construction
- Indicates existing structure
- Point of Min Vertical Clearance
- Match existing cross slope
- Indicates remove concrete
- Indicates location of new Joint Seal
- Drainage Inlet Type D2

X DESIGN ENGINEER	DESIGN	BY R. Stiltz	CHECKED X	LOAD & RESISTANCE FACTOR DESIGN	LIVE LOADING: HL93 W/"LOW-BOY"; PERMIT DESIGN VEHICLE
	DETAILS	BY G. Hallstrom	CHECKED X	LAYOUT BY X	CHECKED X
	QUANTITIES	BY X	CHECKED X	SPECIFICATIONS BY X	PLANS AND SPECS COMPARED X

ORIGINAL SCALE IN INCHES FOR REDUCED PLANS 0 1 2 3

STATE OF CALIFORNIA DEPARTMENT OF TRANSPORTATION

DIVISION OF ENGINEERING SERVICES STRUCTURE DESIGN DESIGN BRANCH 10

CU 08
EA 355561

BRIDGE NO. 54-0484 54-0484G
POST MILE 43.5

VICTORVILLE SEPARATION & OH (WIDEN) & (NEW)

RAILROAD SUBMITTAL

DISREGARD PRINTS BEARING EARLIER REVISION DATES 05-20-09 05-21-09

REVISION DATES

SHEET 1 OF 5

STRUCTURES DESIGN GENERAL PLAN SHEET (ENGLISH) (REV.07-24-06)

FILE => 540484_rrsubmit01.dgn

USERNAME => s136549 DATE PLOTTED => 21-MAY-2009 TIME PLOTTED => 09:29

DIST.	COUNTY	ROUTE	POST MILES TOTAL PROJECT	SHEET NO.	TOTAL SHEETS
08	SBd	15			

REGISTERED ENGINEER - CIVIL

PLANS APPROVAL DATE

REGISTERED PROFESSIONAL ENGINEER RYAN STILTZ No. C65738 Exp. 9/30/09 CIVIL STATE OF CALIFORNIA

The State of California or its officers or agents shall not be responsible for the accuracy or completeness of electronic copies of this plan sheet.

GENERAL SHORING NOTES:

1. All dimensions are measured perpendicular to ℄ Track.
2. Prior to commencing any work, the contractor shall submit for approval by the Railroad detailed plans indicating the nature and extent of the track protection shoring proposed. The contractor shall install the temporary shoring system per the approved plans. Design of the temporary shoring system to comply with current RAILROAD GUIDELINES FOR TEMPORARY SHORING.
3. For excavations which encroach into Zone A or B, shoring plans shall be accompanied by design calculations. Plans and calculations must be signed and stamped by a Professional Engineer registered in the state of California.

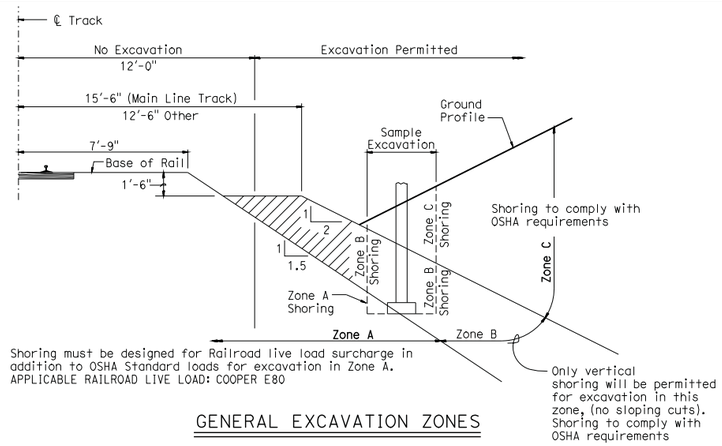

GENERAL EXCAVATION ZONES

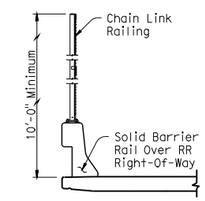

TYPICAL FENCE ON BARRIER DETAIL

THE FOLLOWING INFORMATION PER RAILROAD GUIDELINES SHALL BE PROVIDED ON THE BRIDGE PLANS

Railroad General Plan (GP):

1. Centerline of bridge and/or centerline of project.
2. Track layout and limits of railroad right-of-way with respect to centerline of main lines.
3. Future tracks, access roadways and identify the existing tracks as main, siding or spur etc.
4. Location of minimum vertical clearance.
5. Minimum horizontal clearance at right angle from the centerlines of the nearest existing or future track to the face of obstruction such as substructure above grade or foundation below grade.
6. Horizontal spacing at right angle between the centerlines existing and/or future tracks.
7. Limits of shoring and minimum distance at right angle from the centerline of the nearest tracks.
8. Toe of slope and/or limits of retaining wall.
9. Railroad Milepost and direction of increasing Milepost.
10. Limits of barrier rail and fence combination over the railroad right-of-way.
11. Depth of foundation below bottom of tie.
12. Existing and proposed ground line & roadway profile.
13. Type of slope paving.
14. Total width of superstructure.
15. Width of shoulder and/or sidewalk.
16. Top and bottom of pier protection wall elevation relative to top of the rail elevation and cross-sectional dimensions.
17. Top of rail elevation information as shown in the table for all tracks with permanent vertical clearance of less than 24 feet. (This information is only required for new structures)

Foundation Plan:

1. Existing contours.
2. All existing facilities and utilities.
3. Direction of flow for all drainage system within the project limits.

RAILROAD GENERAL NOTES:

1. Railroad requires review and approval of all submittals for shoring, demolition, erection and falsework. No work shall be allowed prior to written railroad approval. Allow a minimum of four weeks for the review and approval of each submittal unless specified otherwise in the contract special provisions. Specific conditions or complex scope of submittals may substantially increase the time for review.
2. The proposed grade separation project shall not increase the quantity and/or characteristics of the flow in the railroad 's ditches and/or drainage structures. Deck drains over the railroad right of way shall not be allowed. The flow from the deck shall be contained and directed away from the railroad drainage system.
3. The elevation of the existing top-of-rail profile shall be verified before beginning construction. All discrepancies shall be brought to the railroad authority for approval prior to beginning any construction activities.
4. The contractor must submit a proposed method of erosion and sediment control within the railroad right-of-way and have the method approved by the railroad.
5. All shoring systems that impact the railroad's operations and/or supports the railroad's embankment shall be designed and constructed per current Railroad Guidelines for Temporary Shoring.
6. All demolitions within the railroad right-of-way and/or demolition that may impact the railroad's tracks or operations shall be in compliance with the current Railroad Demolition Guidelines.
7. All erection over the railroad right-of-way shall be designed such that there is no interruption to the railroad's normal operation. Any train traffic interruption shall require prior railroad approval in writing.
8. All construction phases that may impact the railroad's normal operation shall be designed to cause no interruption to the railroad operation. Any train traffic interruption closure shall require prior railroad approval in writing.
9. All falsework clearances shall comply with the minimum construction clearances envelope.
10. All permanent clearances shall be verified prior to completion of the project.
11. For all railroad coordination during construction refer to the railroad's special provisions within the Contract Special Provisions documents and the approved Construction and Maintenance (C & M) Agreement.

REVISED STANDARD DRAWING

FILE NO. xs11-010-X

APPROVED BY RAJ MANGAT (RESPONSIBLE TECHNICAL SPECIALIST)

APPROVAL DATE 02-01-08

RELEASED BY SHANNON POST (RESPONSIBLE OFFICE CHIEF)

RELEASE DATE - -

STATE OF CALIFORNIA DEPARTMENT OF TRANSPORTATION

DIVISION OF ENGINEERING SERVICES

BRIDGE NO. 54-0484

POST MILE 43.5

MINIMUM RAILROAD REQUIREMENTS FOR OVERHEAD STRUCTURES

VICTORVILLE SEPARATION & OVERHEAD (WIDEN)

DS OSD 2147A (ENGLISH STANDARD DRAWING "XS" BORDER REV. 01/11/08)

ORIGINAL SCALE IN INCHES FOR REDUCED PLANS 0 1 2 3

CU 08
EA 355561

DISREGARD PRINTS BEARING EARLIER REVISION DATES 5-19-09

REVISION DATES (PRELIMINARY STAGE ONLY)

SHEET 2 OF 5

USERNAME => ghallstr

540484_rrsubmit02.dgn

DATE PLOTTED => 20-MAY-2009 TIME PLOTTED => 14:40

DIST	COUNTY	ROUTE	POST MILES TOTAL PROJECT	SHEET No	TOTAL SHEETS
08	SBd	15			

REGISTERED CIVIL ENGINEER DATE

PLANS APPROVAL DATE

REGISTERED PROFESSIONAL ENGINEER RYAN STILTZ No. C65738 Exp. 9/30/09 CIVIL STATE OF CALIFORNIA

The State of California or its officers or agents shall not be responsible for the accuracy or completeness of electronic copies of this plan sheet.

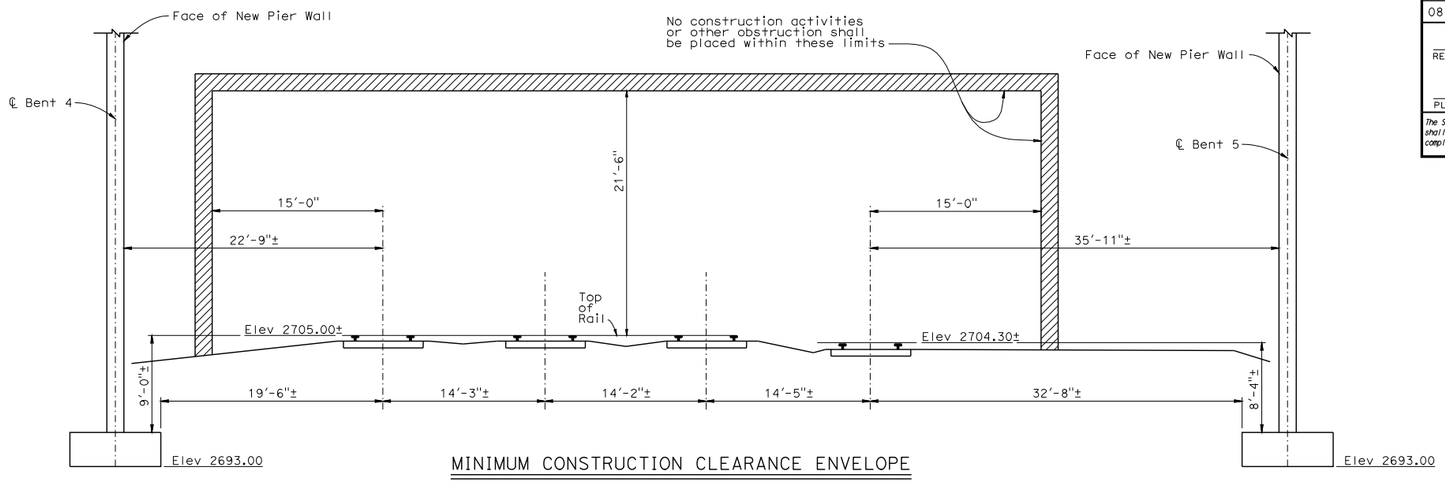

MINIMUM CONSTRUCTION CLEARANCE ENVELOPE

BRIDGE NO. 54-0484G (NEW)
(NORMAL TO RAILROAD)
1"=5'-0"

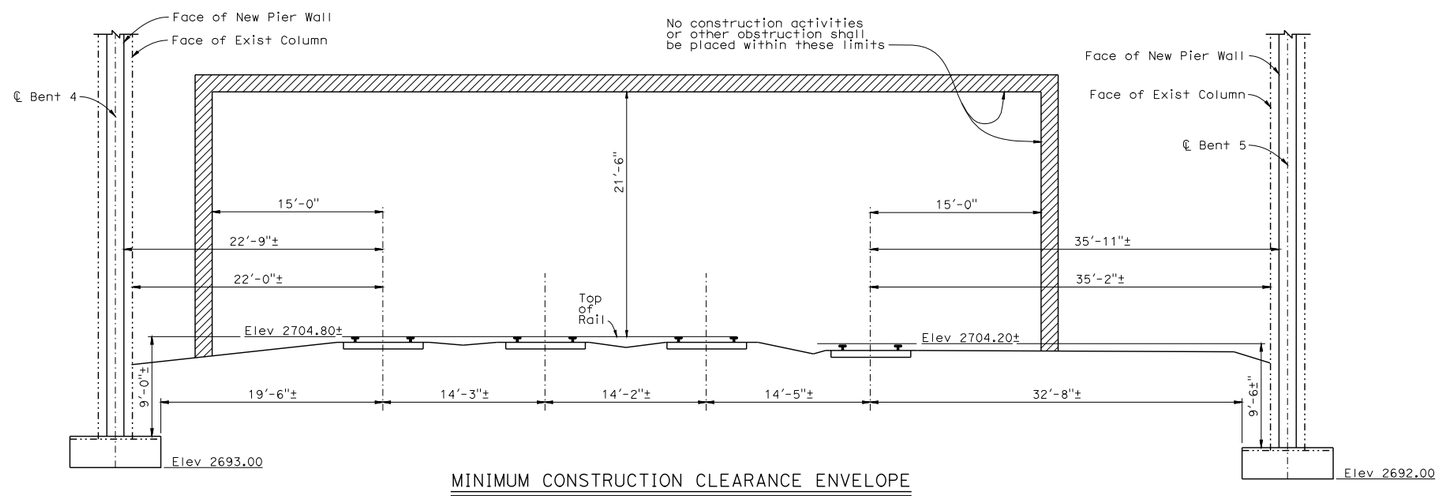

MINIMUM CONSTRUCTION CLEARANCE ENVELOPE

BRIDGE NO. 54-0484 (WIDEN)
(NORMAL TO RAILROAD)
1"=5'-0"

LEGEND:

—— Indicates new construction
-·-·- Indicates existing structure

	BY	CHECKED
DESIGN	R. Stiltz	X
DETAILS	G. Hallstrom	X
QUANTITIES	X	X

STATE OF CALIFORNIA
DEPARTMENT OF TRANSPORTATION

DIVISION OF ENGINEERING SERVICES STRUCTURE DESIGN
DESIGN BRANCH 10

BRIDGE NO. 54-0484
POST MILE 43.5

VICTORVILLE SEPARATION & OVERHEAD (WIDEN)
RAILROAD SUBMITTAL

STRUCTURES DESIGN DETAIL SHEET (ENGLISH) (REV. 10/25/05)

ORIGINAL SCALE IN INCHES FOR REDUCED PLANS 0 1 2 3

CU 08
EA 355561

DISREGARD PRINTS BEARING EARLIER REVISION DATES 05-20-09

REVISION DATES

SHEET 3 OF 5

FILE => 540484_rrsubmit03.dgn

USERNAME => ghallstr DATE PLOTTED => 20-MAY-2009 TIME PLOTTED => 14:41

ATTACHMENT 12-7A

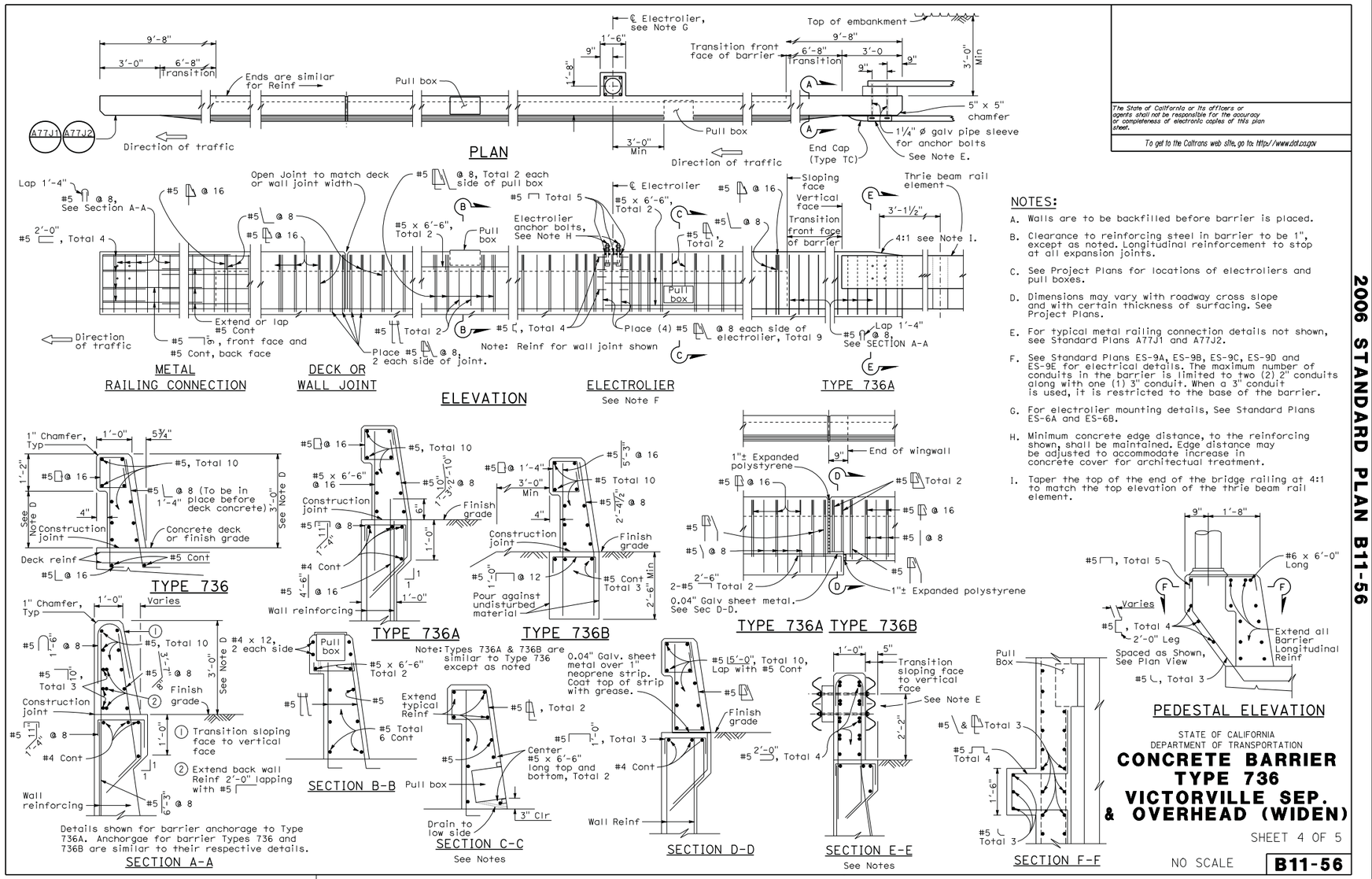

NOTES:

A. Walls are to be backfilled before barrier is placed.

B. Clearance to reinforcing steel in barrier to be 1", except as noted. Longitudinal reinforcement to stop at all expansion joints.

C. See Project Plans for locations of electroliers and pull boxes.

D. Dimensions may vary with roadway cross slope and with certain thickness of surfacing. See Project Plans.

E. For typical metal railing connection details not shown, see Standard Plans A77J1 and A77J2.

F. See Standard Plans ES-9A, ES-9B, ES-9C, ES-9D and ES-9E for electrical details. The maximum number of conduits in the barrier is limited to two (2) 2" conduits along with one (1) 3" conduit. When a 3" conduit is used, it is restricted to the base of the barrier.

G. For electrolier mounting details, See Standard Plans ES-6A and ES-6B.

H. Minimum concrete edge distance, to the reinforcing shown, shall be maintained. Edge distance may be adjusted to accommodate increase in concrete cover for architectual treatment.

I. Taper the top of the end of the bridge railing at 4:1 to match the top elevation of the thrie beam rail element.

The State of California or its officers or agents shall not be responsible for the accuracy or completeness of electronic copies of this plan sheet.

To get to the Caltrans web site, go to: http://www.dot.ca.gov

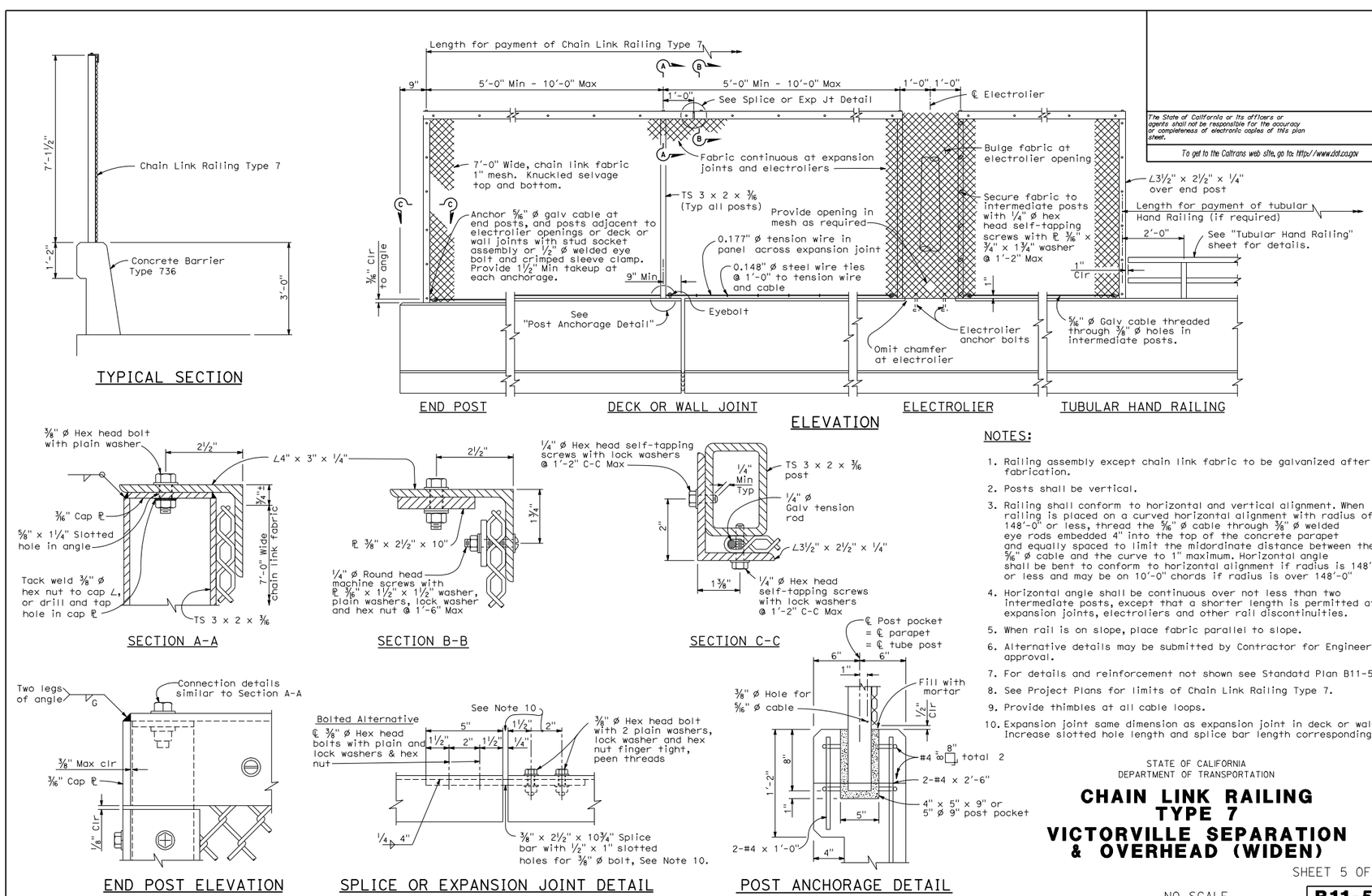
TYPICAL SECTION
Chain Link Railing Type 7
Concrete Barrier Type 736
7'-1½"
1'-2"
3'-0"
Length for payment of Chain Link Railing Type 7
5'-0" Min - 10'-0" Max
1'-0"
See Splice or Exp Jt Detail
℄ Electrolier
7'-0" Wide, chain link fabric 1" mesh. Knuckled selvage top and bottom.
Fabric continuous at expansion joints and electroliers
Bulge fabric at electrolier opening
TS 3 x 2 x ⅜ (Typ all posts)
Anchor ⅝" Ø galv cable at end posts, and posts adjacent to electrolier openings or deck or wall joints with stud socket assembly or ½" Ø welded eye bolt and crimped sleeve clamp. Provide 1½" Min takeup at each anchorage.
Provide opening in mesh as required
Secure fabric to intermediate posts with ¼" Ø hex head self-tapping screws with ℄ ⅜" x ¾" x 1¾" washer @ 1'-2" Max
L3½" x 2½" x ¼" over end post
Length for payment of tubular Hand Railing (if required)
2'-0"
See "Tubular Hand Railing" sheet for details.
0.177" Ø tension wire in panel across expansion joint
0.148" Ø steel wire ties @ 1'-0" to tension wire and cable
9" Min
⅜" Clr to angle
1" Clr
See "Post Anchorage Detail"
Eyebolt
Electrolier anchor bolts
Omit chamfer at electrolier
⅝" Ø Galv cable threaded through ⅜" Ø holes in intermediate posts.
END POST
DECK OR WALL JOINT
ELECTROLIER
TUBULAR HAND RAILING
ELEVATION
⅜" Ø Hex head bolt with plain washer
L4" x 3" x ¼"
⅜" Cap ℄
⅝" x 1¼" Slotted hole in angle
Tack weld ⅜" Ø hex nut to cap L, or drill and tap hole in cap ℄
TS 3 x 2 x ⅜
7'-0" Wide chain link fabric
SECTION A-A
℄ ⅜" x 2½" x 10"
¼" Ø Round head machine screws with ℄ ⅜" x 1½" x 1½" washer, plain washers, lock washer and hex nut @ 1'-6" Max
SECTION B-B
¼" Ø Hex head self-tapping screws with lock washers @ 1'-2" C-C Max
TS 3 x 2 x ⅜ post
¼" Min Typ
¼" Ø Galv tension rod
L3½" x 2½" x ¼"
¼" Ø Hex head self-tapping screws with lock washers @ 1'-2" C-C Max
SECTION C-C
Two legs of angle
Connection details similar to Section A-A
⅜" Max clr
⅜" Cap ℄
⅛" Clr
END POST ELEVATION
Bolted Alternative
℄ ⅜" Ø Hex head bolts with plain and lock washers & hex nut
See Note 10
⅜" Ø Hex head bolt with 2 plain washers, lock washer and hex nut finger tight, peen threads
¼" x 4"
⅜" x 2½" x 10¾" Splice bar with ½" x 1" slotted holes for ⅜" Ø bolt, See Note 10.
SPLICE OR EXPANSION JOINT DETAIL
℄ Post pocket = ℄ parapet = ℄ tube post
⅜" Ø Hole for ⅝" Ø cable
Fill with mortar
#4 8" x 8" total 2
2-#4 x 2'-6"
4" x 5" x 9" or 5" Ø 9" post pocket
2-#4 x 1'-0"
POST ANCHORAGE DETAIL
NOTES:
1. Railing assembly except chain link fabric to be galvanized after fabrication.
2. Posts shall be vertical.
3. Railing shall conform to horizontal and vertical alignment. When railing is placed on a curved horizontal alignment with radius of 148'-0" or less, thread the ⅝" Ø cable through ⅜" Ø welded eye rods embedded 4" into the top of the concrete parapet and equally spaced to limit the midordinate distance between the ⅝" Ø cable and the curve to 1" maximum. Horizontal angle shall be bent to conform to horizontal alignment if radius is 148'-0" or less and may be on 10'-0" chords if radius is over 148'-0"
4. Horizontal angle shall be continuous over not less than two intermediate posts, except that a shorter length is permitted at expansion joints, electroliers and other rail discontinuities.
5. When rail is on slope, place fabric parallel to slope.
6. Alternative details may be submitted by Contractor for Engineer's approval.
7. For details and reinforcement not shown see Standatd Plan B11-54.
8. See Project Plans for limits of Chain Link Railing Type 7.
9. Provide thimbles at all cable loops.
10. Expansion joint same dimension as expansion joint in deck or wall. Increase slotted hole length and splice bar length correspondingly.
STATE OF CALIFORNIA
DEPARTMENT OF TRANSPORTATION
CHAIN LINK RAILING TYPE 7
VICTORVILLE SEPARATION & OVERHEAD (WIDEN)
SHEET 5 OF 5
NO SCALE
B11-52
2006 STANDARD PLAN B11-52
The State of California or its officers or agents shall not be responsible for the accuracy or completeness of electronic copies of this plan sheet.
To get to the Caltrans web site, go to: http://www.dot.ca.gov
8-5-05