Abutment Sheet Check List

A. Plan

1. Place at top, left side of sheet, oriented the same as the General Plan. May be placed horizontal with face down for very long abutments.
2. Show North arrow.
3. Scale 1/4" = 1'-0" usual minimum. Use 1/8" = 1'-0" on large structures, but show less detail.
4. Abutment sheet may be omitted on simple diaphragm type abutments. Layout and Sections should be shown with the girder layout.
5. Check List:
   - Do not repeat stations or bearings shown on Foundation Plan.
   - Dimension along same layout line as is stationed on Foundation Plan.
   - Do not dimension piles from edges of footings.
   - Show only layout dimensions and pile spacing, others should be shown on larger details.
   - Avoid showing any reinforcement.

B. Abutment Elevation

1. Place in front of Plan if "PLAN" is oriented the same as a General Plan, "ELEVATION" may be placed horizontal or looking normal to face of abutment.
2. May be omitted on simple diaphragm type abutments.
3. Rear elevations should be avoided.
4. Same scale as Plan
5. Check List:
   - Show location of weep holes. See Standard Plan B0-3, Bridge Detail 3-1. As an alternative, weep holes and geocomposite drain may be used. See *Bridge Design Details* manual page 6-22.
   - Show elevations on slope paving; exception, a constant dimension below soffit.
   - Do not attempt to show entire skewed wingwalls.
   - Do not show all piles. Note "All piles not shown."
   - It is not necessary to show railing.
   - Avoid detail dimensions.

C. Wingwall Elevation

1. Projection of Abutment Plan if possible. Locate by section symbols if not a projection, or simply call out as WINGWALL ELEVATION.
2. Always show looking normal to wall.
3. Same scale as Plan, unless reinforcement is to be shown. A few bars may be shown at 1/4" = 1'-0", but usually reinforcement should not be shown at less than 3/8" = 1'-0".

4. Check List:
   - Call out standard plans and wall length.
   - Show finished earth or slope paving lines.
   - Wingwall layout dimensions to be shown in Plan view.
   - Show all piles.
   - Railing need not be shown.

D. Sections and Details

1. Sections and details showing reinforcement should not be less than ⅜" = 1'-0" scale; preferred scale is ½" = 1'-0" minimum.
2. Plan of footing corners should be the same orientation as Plan view.
3. Sections should be oriented the same way as the view they are taken from.
4. Sections and details are to be taken from Plan, Elevation, or secondary views rather than from other *sections*.
5. Similar sections need not have all details repeated.
6. Do not shade or show aggregate in sections.
7. Abutment section call out joint seal and movement rating.

E. Retaining Walls

1. Show all layout information along one layout line (usually the face of wall).
2. Do not show dimensions given on standard sheets.
3. Show top of wall details for railings, sidewalks, overhangs, etc.

End Diaphragm Abutment

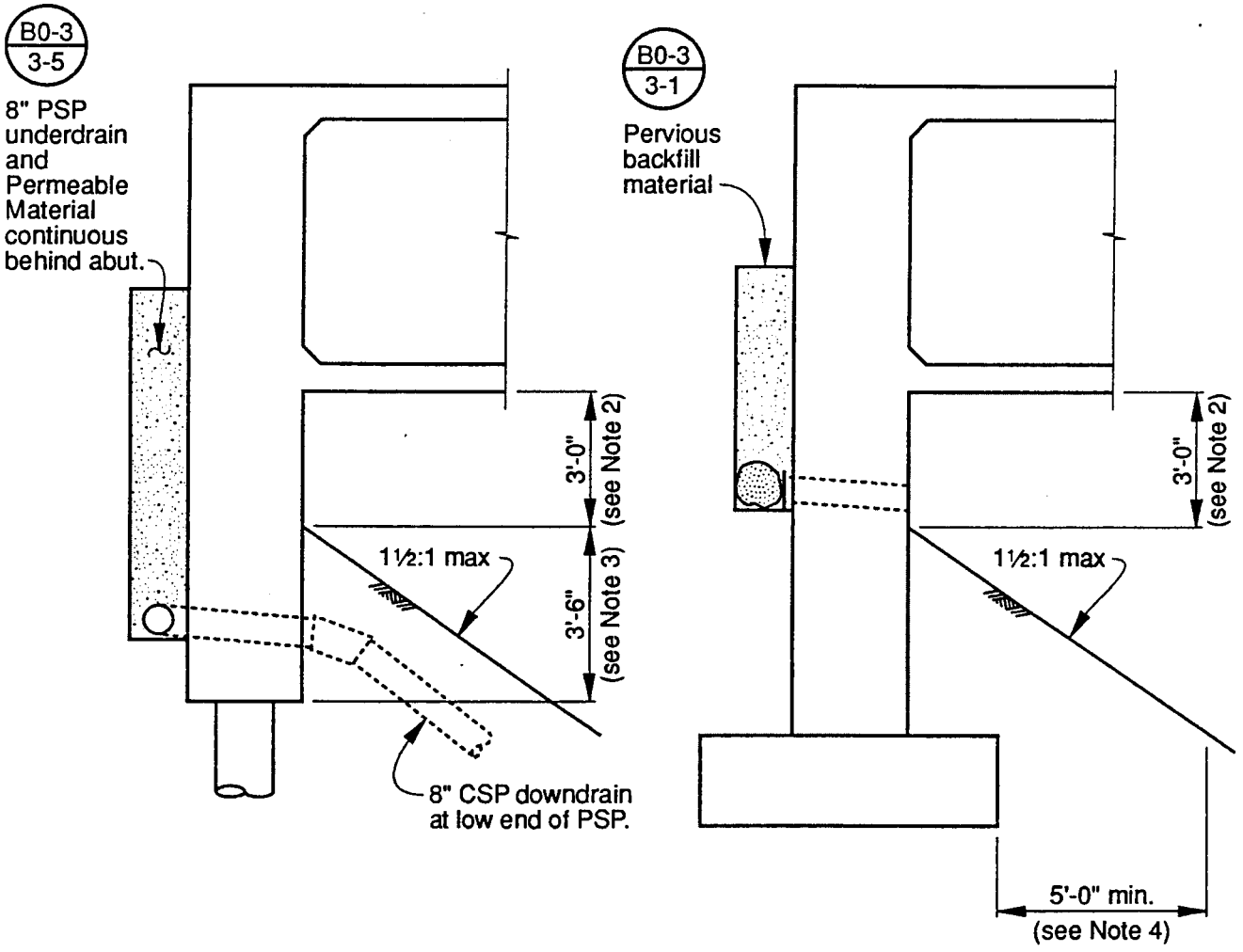

Notes:

1. Reinforce the abutment as shown on pages 1-2, 1-3, and 1-4 of the *Bridge Design Aids.*
2. The clearance between the top of slope and the soffit of the bridge should be about three feet, but may be as little as two feet or as much as four feet, depending upon individual circumstances. This dimension should be shown on the plans.
3. The bottom portion of an end diaphragm abutment on piles should be embedded a minimum of 3½ feet at the intersection of the slope and face of abutment.
4. For end diaphragm abutments on spread footings, the horizontal clearance from the top of footing to the face of slope should be five feet minimum.
5. Continuous pervious backfill material and drains or perforated pipe with permeable material shall be placed in accordance with the instructions in Memo to Designers 5-2. Note that permeable material is only specified when known water bearing material is present behind the abutment.
6. Weep Hole and Geocomposite Drains, Bridge Design Details 6-22, which is an alternative to Bridge Detail B0-3/3-1, should be added to the plans for abutments without structure approaches.
7. End slopes at abutments shall be 1½ to 1 or flatter except under very unusual circumstances.

Weep Hole and Geocomposite Drain

Alternative to Bridge Detail BO-3 / 3-1

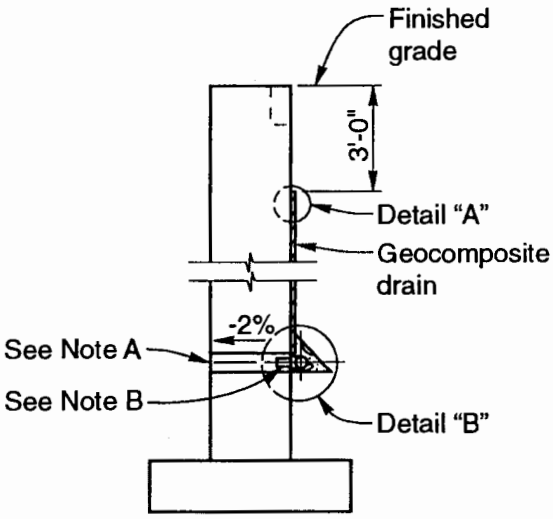

Wall Section

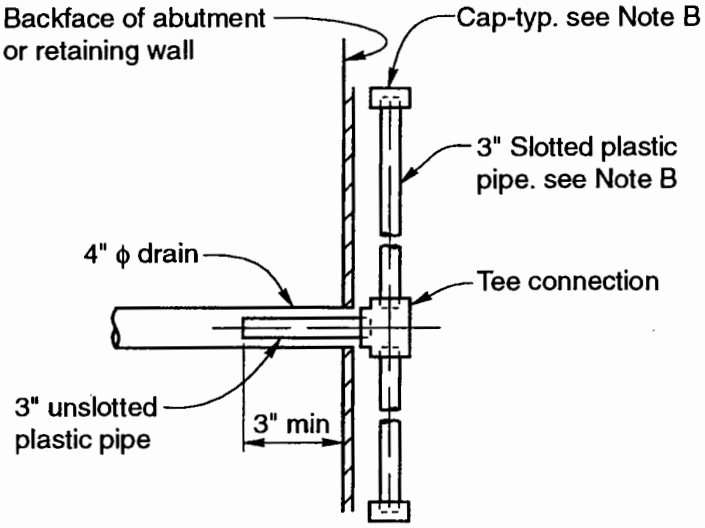

Section A-A

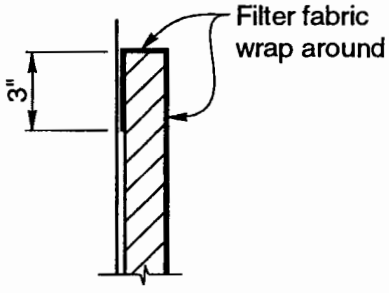

Detail "A"

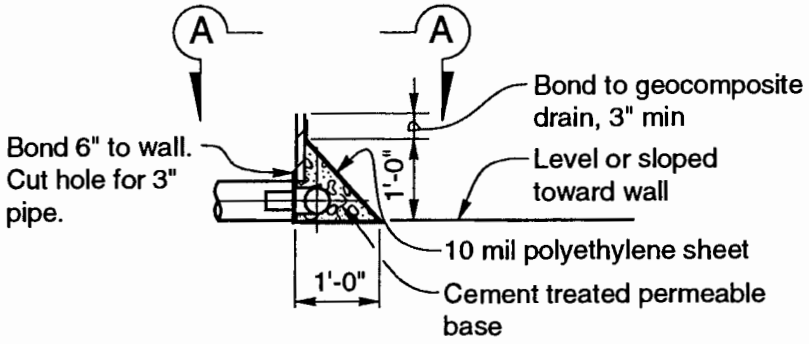

Detail "B"

Notes:

A. 4" drains at intermediate sag points and at 25' max. center to center (9' c-c for Type 3 and 9'-3" c-c for Type 4 retaining walls). For walls adjacent to sidewalks or curbs, provide 4" plastic pipe under sidewalk to discharge through curb face. Exposed wall drains shall be located 3"± above finished grade.

B. Geocomposite drain, cement treated permeable base, and 3" ϕ slotted plastic pipe continuous behind retaining wall or abutment. Cap ends of pipe. Provide "Tee" connection at each 4" ϕ drain.

C. Connect the low end of plastic pipe to the main outlet pipe as applicable.

STIRRUP REINFORCEMENT AT ABUTMENTS

(Sloping Exterior Girder)

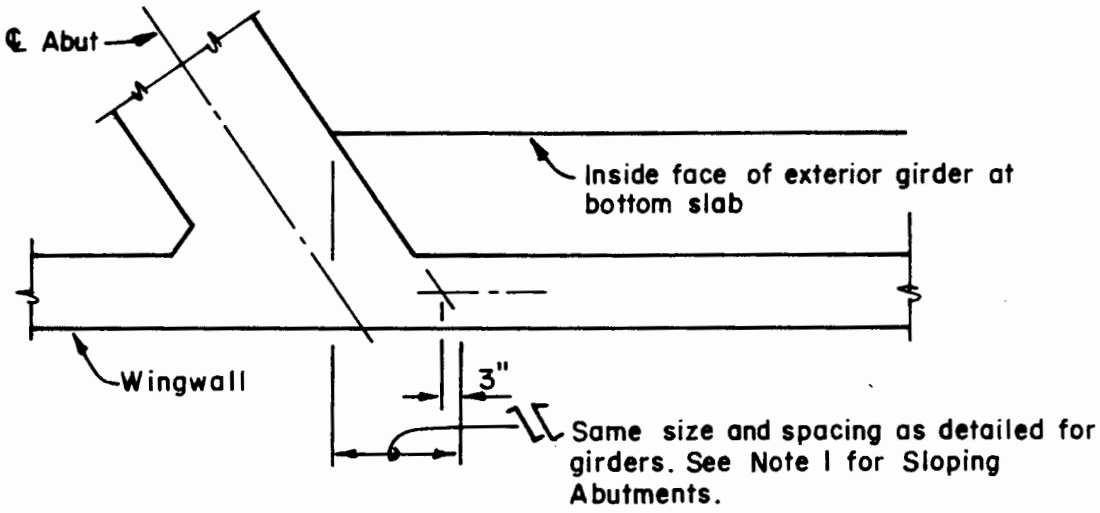

ACUTE ABUTMENT CORNER

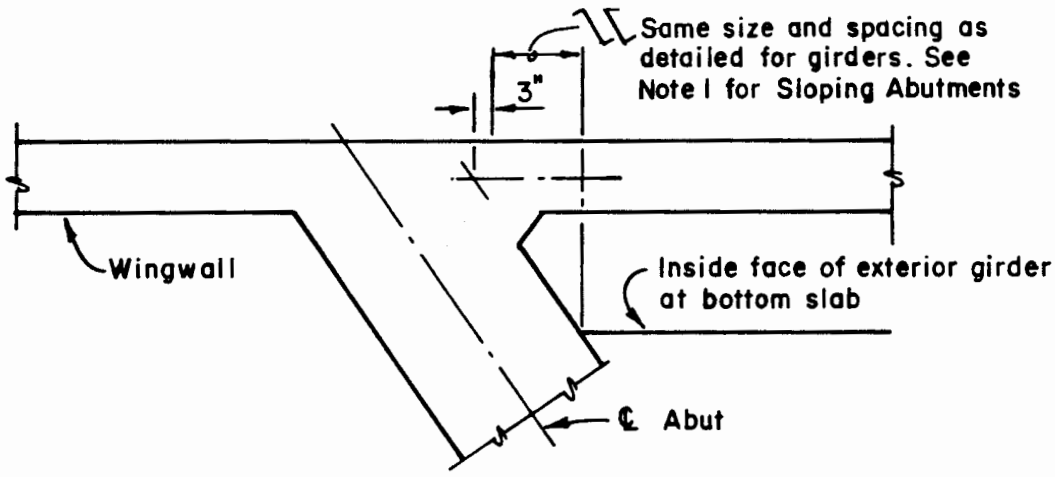

OBTUSE ABUTMENT CORNER

Notes:

1. Additional stirrups or equivalent reinforcing may be required for sloping abutment face.
2. Consideration should be given to potential conflicts when accomodating prestressing flares and assemblies.
3. These details should be shown in addition to requirements on Standard Plans B6-1 and B7-1

BOX GIRDER DIAPHRAGM – SLAB REINFORCEMENT

For Skews Greater Than 20°

At the junction of the bottom slab and end diaphragm of seat-type abutments, for skews greater than 20°, rebar clearance problems may be encountered. The slab thickness may not be adequate to accommodate the "stacking" of longitudinal and transverse slab bars, diaphragm stirrups, and diaphragm bottom bars.

Possible solutions are shown below.

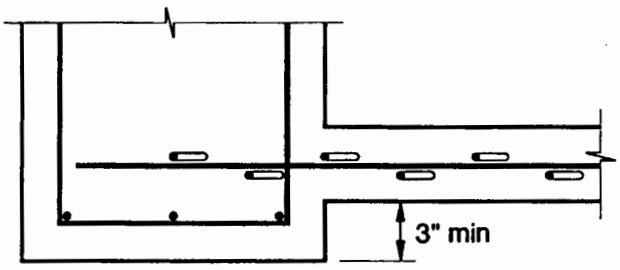

REINFORCED CONCRETE

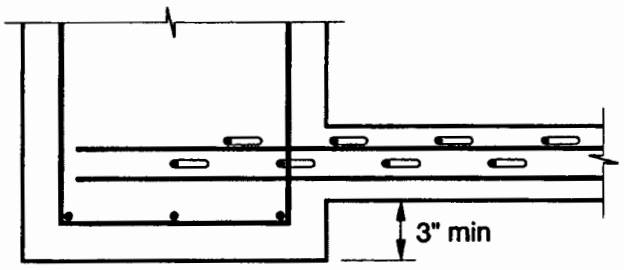

PRESTRESSED CONCRETE

DROP–DIAPHRAGM ALTERNATIVE

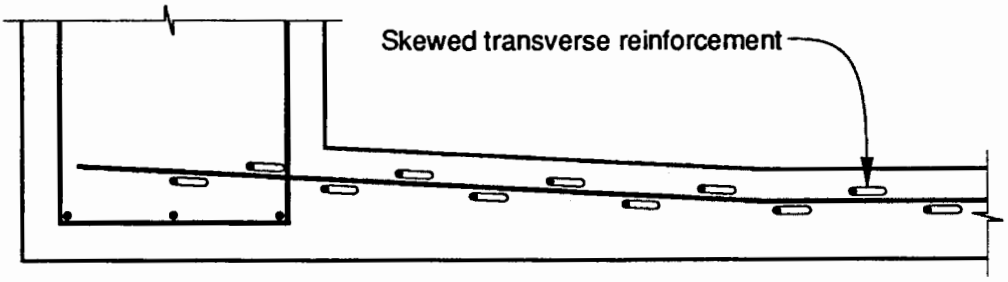

REINFORCED (Shown) — PRESTRESSED (Similar)

FLARED SLAB ALTERNATIVE

Note: Use in conjunction with page 8-32, *Bridge Design Details.*

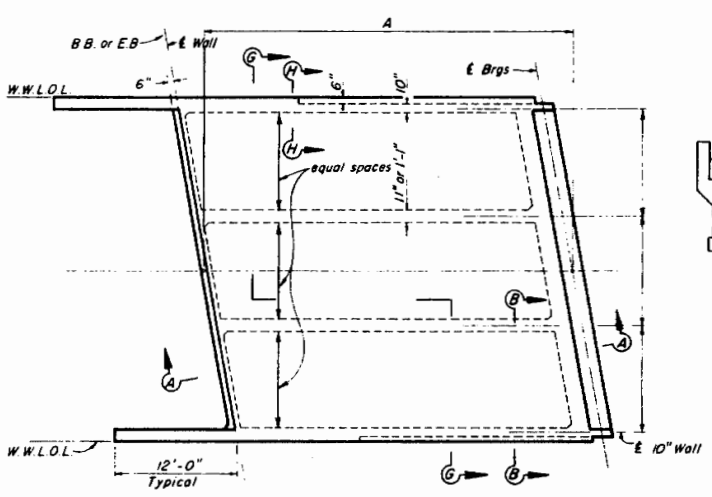

PLAN

Notes:

Add Curb and Railing as required.
For sections not shown, see "Abutment Details" sheet.
This sheet illustrates how a typical "Abutment Layout" sheet should be made.
The information for girder reinforcement and a tabulation of dead loads for determining number of piles or sizes of spread footings are not to be placed on the "Abutment Layout" sheet that goes into a set of plans.

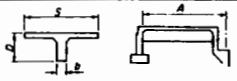

GIRDER D.L.
kips

		b=11"			b=1'-1"			
		D=3'-0"			D=4'-0"		D=5'-0"	
	A	20	24	28	32	36	40	44	48	52
S	8'-0"	16.4	20.9	24.4	34.6	39.5	44.3	55.7	61.3	66.7
	9'-0"	18.6	23.2	27.8	38.5	44.0	49.4	61.5	67.5	73.5
	10'-0"	20.7	25.8	30.9	42.4	48.4	54.3	68.9	75.5	80.0
	11'-0"	22.7	28.3	34.8	46.3	53.0	59.3	77.8	80.0	87.2

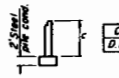

C	3	6	7
DL	1.65	1.80	1.95

BACK WALL
kips/ft

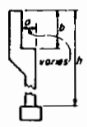

h	20	21	22	23	24	25	26	27	28	29	30
DL	6.00	6.22	6.44	6.66	6.88	7.10	7.32	7.54	7.76	7.98	8.20

a. 2'-0" used
2'-2" add 0.10 Kips/ft.
2'-4" add 0.22 Kips/ft.
2'-6" add 0.32 Kips/ft.

b. 5'-6" Used - for each 1.0' decrease in "b" add 0.08 k/ft
for each 1'0 increase in "b" subtract 0.08 k/ft.

FRONT WALL
kips/ft

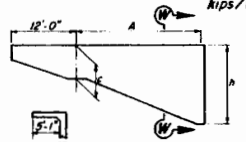

SECTION W-W

Note: One wall and slab, rail not included. Slab using 11'-0" girder spacing.

h	A	C=5'			C=6'				C=7'			
		24	28	28	32	36	40	40	44	48	52
20	Front	29.1	34.3	34.7	39.0	44.9	49.2	50.7	56.2	61.1	66.4
	Rear	32.4	36.1	39.1	43.1	47.3	51.4	54.9	59.6	63.8	68.3
25	Front				47.1	53.1	59.1	60.0	66.2	71.9	78.0
	Rear				46.7	51.6	56.1	59.6	64.2	69.4	74.4
30	Front						68.3	69.1	76.2	82.6	89.8
	Rear						60.8	64.2	69.3	75.1	80.4

SIDE WALL
kips

ABUTMENT DEAD LOAD

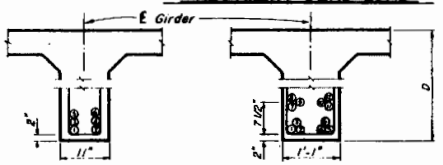

GIRDER REINFORCEMENT
no scale

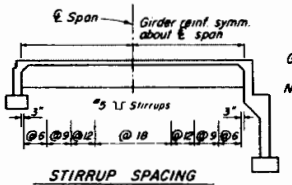

STIRRUP SPACING
no scale

SPAN	FEET
20	.00
24 - 32	.01
36 - 44	.02
48	.03
52	.04

GIRDER DEFLECTIONS

Note. Total deflection will be reached about 4 years after falsework removal. For inital deflections after falsework removal, divide values shown by three.

			9'-0" Girder Spacing												Tot #11	11'-0" Girder Spacing												Tot #11	#5 Stirrup Spacing
	A	D	(1)	(2)	(3)	(4)	(5)	(6)	(7)	(8)	(9)	(10)	(11)	(12)		(1)	(2)	(3)	(4)	(5)	(6)	(7)	(8)	(9)	(10)	(11)	(12)		
11" Stem	20	3'-0"	Same Reinf. as 11'-0" Spc. if used													Cont	Cont	Cont	Cont									4	2@9 2@12 @18
	24	3'-0"	Cont	Cont	Cont	Cont									4	Cont	Cont	Cont	Cont	16	16							6	3@9 3@12 @18
	28	3'-0"	Cont	Cont	Cont	Cont	16	16							6	Cont	Cont	Cont	Cont	Cont	Cont							6	3@6 4@9 3@12 @18
	32	4'-0"	Cont	Cont	18	Cont	Cont	18							6	Cont	Cont	22	Cont	Cont	22							6	3@12 @18
1'-1" Stem	36	4'-0"	Cont	Cont	24	Cont	Cont	24							6	Cont	Cont	26	Cont	Cont	26	16				16		8	2@9 3@12 @18
	40	4'-0"	Cont	Cont	32	Cont	Cont	32	20				20		8	Cont	Cont	32	Cont	Cont	32	24				24		8	4@9 4@12 @18
	44	5'-0"	Cont	Cont	34	Cont	Cont	34							6	Cont	Cont	36	Cont	Cont	36	24				24		8	5@12 @18
	48	5'-0"	Cont	Cont	40	Cont	Cont	40	30				30		8	Cont	Cont	40	Cont	Cont	40	32	20			32		10	2@9 5@12 @18
	52	5'-0"	Cont	Cont	38	Cont	Cont	38	Cont	24			Cont	24	10	Cont	Cont	40	Cont	Cont	40	Cont	30	16	16	Cont	30	12	4@9 5@12 @18
			Total length of bars given																										

GIRDER REINFORCEMENT

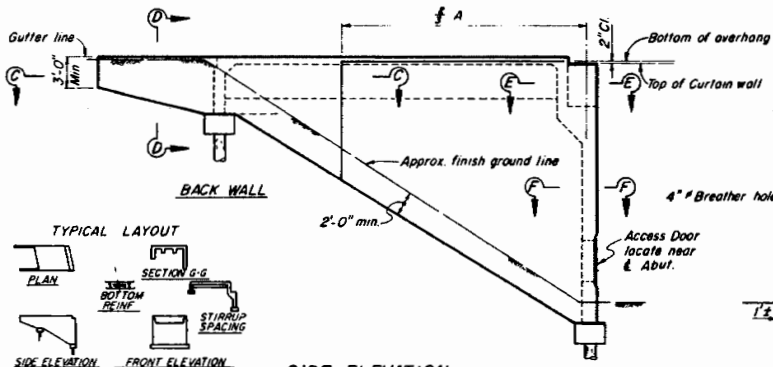

BACK WALL

SIDE ELEVATION

FRONT WALL

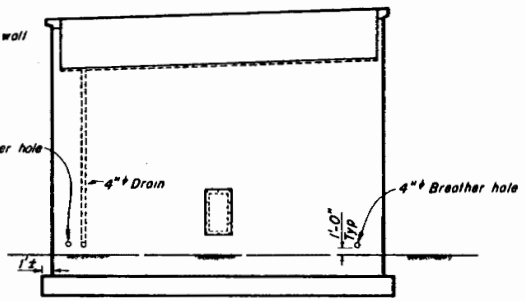

FRONT ELEVATION

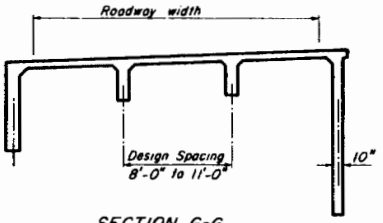

SECTION G-G

BRIDGE DESIGN DETAILS September 1985 6-40

		State of CALIFORNIA DEPARTMENT OF TRANSPORTATION	DIVISION OF STRUCTURES STRUCTURE DESIGN		BIN TYPE ABUTMENT LAYOUT

ORIGINAL SCALE IN INCHES FOR REDUCED PLANS 0 1 2 3

CU
WO

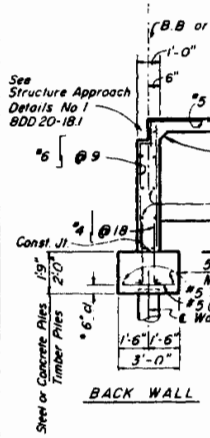

BACK WALL

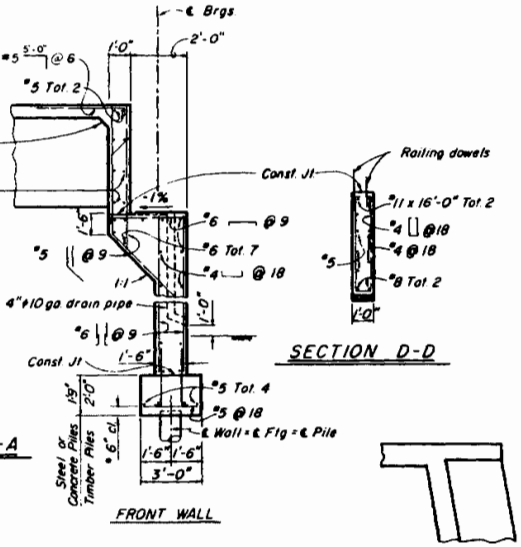

PART SECTION A-A

FRONT WALL

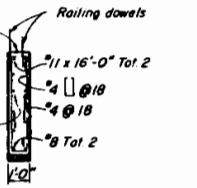

SECTION D-D

* Except 9" where timber piles are used

PILE EMBEDMENT IN FOOTING

Pile Type	Embedment
Concrete	3"
Steel	5"
Timber	8"

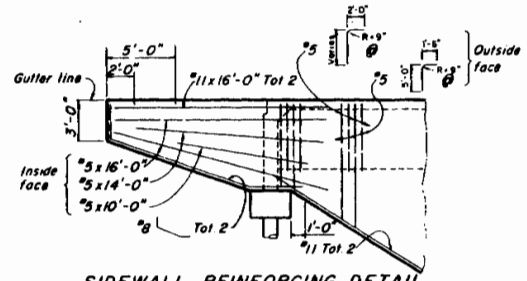

SIDEWALL REINFORCING DETAIL

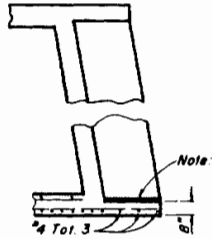

SECTION E-E

Note: Use 1" joint filler material if face of girder is cast against curtain sidewall. (Typ.)

DESIGN & DETAIL NOTES	
SECTION	
A - A	Dimension brg. seat width 1'-0" or 1'-3", 4" ϕ drain, check for abut. drainage detail or sidewalk outlet. Revise footing if piles are not required.
B - B	Trans. slab bar spcg., truss bar bend dimen. Revise cor. detail for other than barrier curb. Drainage details if barrier rail is used.
C - C	Dimension reveal.
B-B, D-D	Add curb, sidewalk or railing.
C-C, E-E, F-F	Complete corner details.
Sidewalk Reinf. Detail :	Bar spacing
Reinforcement Inside Face :	If top of back ftg. is greater than 2'-6" below bottom of girder, add additional reinforcement.
Access Door :	Number required
Check - Overhang of curb - Design 1'-0"	

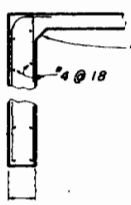

SECTION H-H

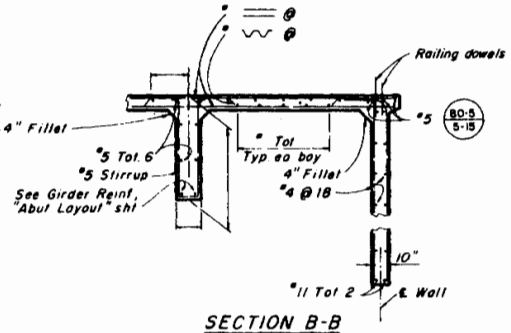

SECTION B-B

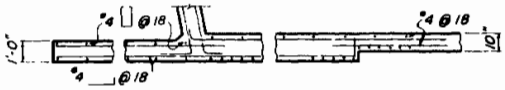

SECTION C-C

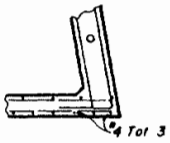

SECTION F-F

Note: For location of Sections, see "Abutment Layout" sheet

For Access Door see BD-13 13-3

BRIDGE DESIGN DETAILS September 1985 6-41

DESIGN		State of CALIFORNIA DEPARTMENT OF TRANSPORTATION	DIVISION OF STRUCTURES STRUCTURE DESIGN	BRIDGE NO.	BIN TYPE ABUTMENT DETAILS
DETAILS				POST MILE	
QUANTITIES					

ORIGINAL SCALE IN INCHES FOR REDUCED PLANS 0 1 2 3 4

CU
WO

REVISION DATES (PRELIMINARY STAGE ONLY)

SHEET OF

CANTILEVER ABUTMENT — SPREAD FOOTING

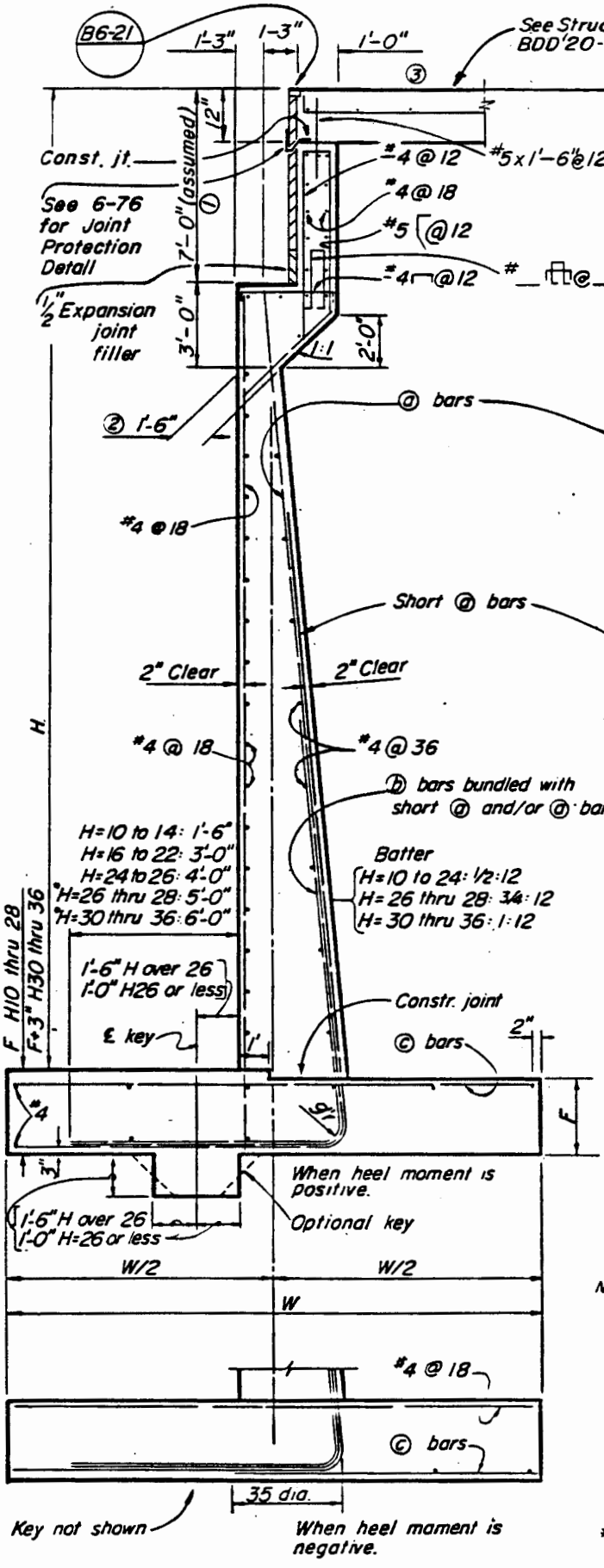

TYPICAL SECTION

GENERAL NOTES

DESIGN: f_s = 20,000 p.s.i., n=10
f_c = 1,200 p.s.i.

Equivalent Fluid Pressure:
36 lbs./sq. ft., toe
27 lbs./sq. ft., heel

2' level surcharge
Weight of earth on footing = 120 lbs./cu. ft.

NOTE: Bar cut-offs may be varied in increments of 6".

Dimensions indicate length of short ⓐ and ⓑ bars above top of footing.

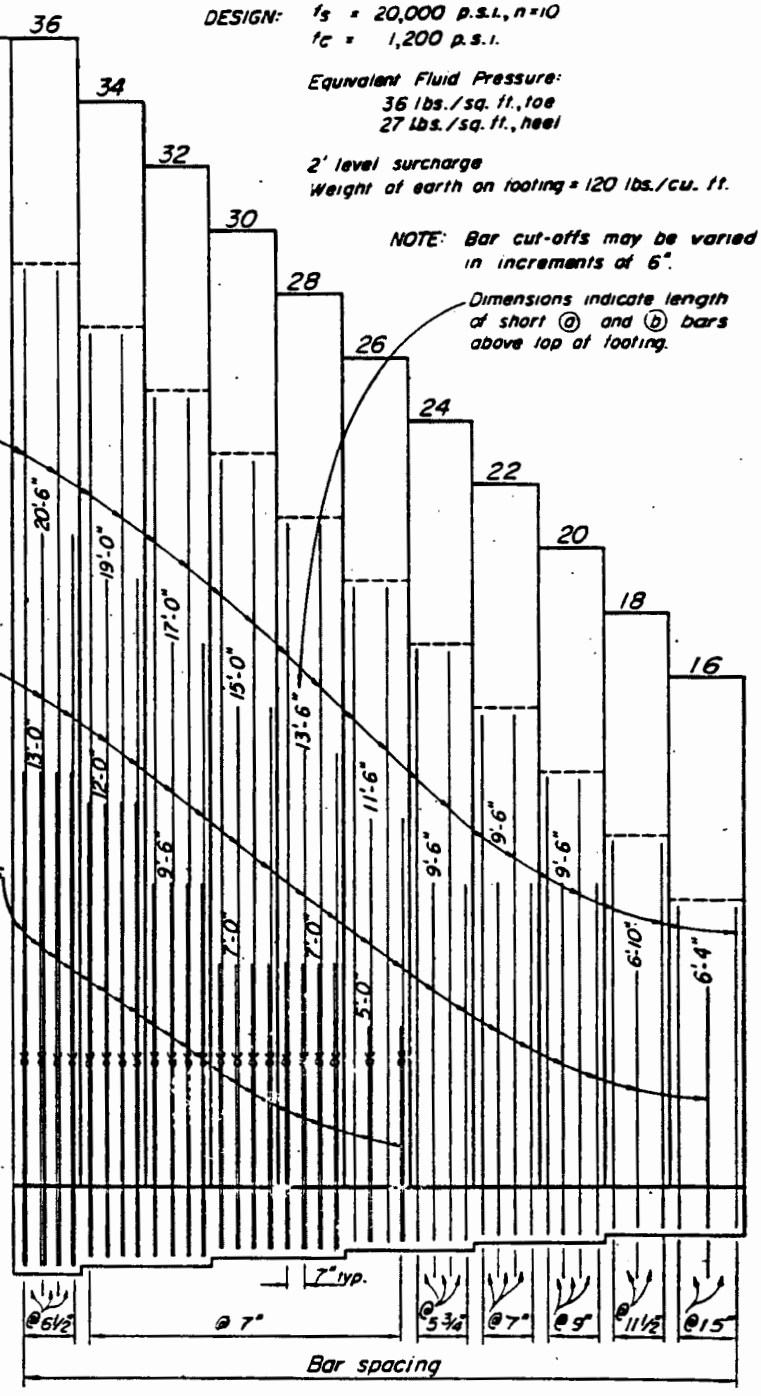

ELEVATION

NOTE:
Key to be used except when found unnecessary by the Engineer.

① Abutment shaft is proportioned for 7'-0" deep seat. For any depth over 7'-0", the top of stem dimension ② should be increased by the amount of batter for every foot increase in depth.

③ When approach slab is not required, extend 1' thick backwall to top of deck.

*ⓐ and ⓑ bundle bars.

For lower walls, see table.

H_____ ft.
W_____ ft.
F_____ ft.
As_____ sq.in./l.f.
V_____ kips
P_r ____ kips/s.f.
Mom___ ft. kips

CANTILEVER ABUTMENT - SPREAD FOOTING

					Shaft @ top of ftg.			APPLIED SUPERSTRUCTURE LOAD IN KIPS PER FT.																
								0				5				7.5				10				
H	W	F	ΣM @ ℄ Brg	ΣV with 0 Supstr	Mom.	A_s a bars	A_s b bars	toe Pr.	toe Mom.	heel Mom.	heel A_s c bars	toe Pr.	toe Mom.	heel Mom	heel A_s c bars	toe Pr.	toe Mom.	heel Mom.	heel A_s c bars	toe Pr.	toe Mom.	heel Mom.	heel A_s c bars	H
10	6	1.5	-9.40	5.42	9.60	0.42 #8 @ 18		2.47	-2.62	+4.37	0.19 #5@18	3.31	-3.89	+1.21	0.05 #4@18	3.72	-4.52	-1.84	0.08 #4@18	4.14	-5.17	-3.44	0.15 #5@18	10
12	7	1.5	-13.7	7.72	15.55	0.64 #9@18		2.78	-4.88	+7.58	0.33 #7@18	3.50	-6.70	+3.99	0.17 #5@18	3.85	-7.59	+2.22	0.10 #4@18	4.21	-8.50	-2.01	0.09 #4@18	12
14	8	1.5	-19.0	10.25	23.50	0.91 #11@18		3.06	-8.33	+11.35	0.49 #8@18	3.69	-10.70	+7.33	0.32 #7@18	4.00	-11.89	+5.37	0.23 #6@18	4.31	-13.06	+3.33	0.14 #5@18	14
16	9	1.5	-25.4	13.05	33.80	1.24 #11@15		3.33	-12.66	+16.03	0.70 #9@15	3.89	-15.60	+11.57	0.50 #8@15	4.16	-17.04	+9.39	0.41 #7@15	4.44	-18.51	+7.05	0.31 #6@15	16
18	10	1.5	-32.9	16.08	46.65	1.62 #11@11½		3.59	-18.19	+21.73	0.94 #9@11½	4.08	-21.72	+16.84	0.73 #8@11½	4.34	-23.50	+14.41	0.63 #7@11½	4.59	-25.30	+11.94	0.52 #7@11½	18
20	11	1.75	-44.3	19.76	62.40	2.06 #11@9		3.99	-26.60	+29.46	1.08 #9@9	4.44	-30.66	+24.15	0.88 #8@9	4.67	-32.75	+21.50	0.79 #7@9	4.90	-34.83	+18.88	0.69 #7@9	20
22	12	1.75	-55.8	23.33	81.30	2.56 #11@7		4.27	-35.42	+37.70	1.38 #9@7	4.68	-40.14	+31.93	1.17 #11@14	4.90	-42.56	+28.97	1.06 #11@14	5.10	-44.84	+26.21	0.96 #10@14	22
24	13	2.00	-71.7	27.62	103.7	3.13 #11@5¼		4.67	-47.39	+48.85	1.54 #11@11½	5.06	-52.73	+42.62	1.35 #11@11½	5.25	-55.31	+39.60	1.25 #10@11½	5.44	-57.95	+36.52	1.15 #10@11½	24
26	14	2.00	-86.2	31.77	129.8	3.38 #11@7	#9@14	4.90	-60.51	+53.7	1.74 #9@7	5.26	-66.44	+49.0	1.64 #9@7	5.44	-69.37	+45.8	1.53 #9@7	5.61	-72.28	+42.0	1.40 #9@7	26
28	15	2.25	-107.2	36.74	159.3	3.93 #11@7	#8@7	5.32	-77.10	+67.2	1.96 #10@7	5.65	-83.62	+61.0	1.77 #9@7	5.82	-86.88	+59.2	1.73 #9@7	5.98	-90.09	+56.5	1.65 #9@7	28
30	16	2.25	-126.1	41.48	194.4	3.89 #11@7	#8@7	5.55	-94.25	+70.1	2.19 #10@7	5.86	-101.39	+64.3	1.86 #10@7	6.01	-104.91	+61.7	1.80 #10@7	6.17	-108.69	+59.7	1.74 #10@7	30
32	17	2.50	-152.5	47.21	233.5	4.40 #11@7	#9@7	5.94	-116.15	+83.3	2.16 #10@7	6.23	-123.80	+77.4	2.00 #10@7	6.38	-127.73	+74.3	1.93 #10@7	6.52	-131.63	+71.4	1.85 #10@7	32
34	18	2.50	-176.5	52.58	277.4	4.97 #11@7	#11@7	6.19	-139.21	+96.5	2.50 #11@7	6.47	-147.62	+89.6	2.32 #11@7	6.61	-151.82	+87.2	2.25 #11@7	6.75	-156.02	+84.1	2.17 #10@7	34
36	19	2.75	-209.1	58.94	326.6	5.55 #11@6½	#11@6½	6.55	-166.91	+111.6	2.60 #11@6½	6.82	-175.92	+105.1	2.43 #11@6½	6.95	-180.35	+103.5	2.36 #11@6½	7.09	-184.94	+101.2	2.28 #10@6½	36

	APPLIED SUPERSTRUCTURE LOAD IN KIPS PER FT.																QUANTITIES								
	12.5				15				17.5				20					Bar Reinforcing Steel (lbs./ft.) Applied Superstructure Load								
H	toe Pr.	toe Mom	heel Mom	heel A_s c bars	toe Pr.	toe Mom	heel Mom.	heel A_s c bars	toe Pr.	toe Mom	heel Mom	heel A_s c bars	toe Pr.	toe Mom	heel Mom.	heel A_s c bars	Conc cf/ft	0	5	7.5	10	12.5	15	17.5	20	H
10	4.56	-5.80	-4.99	0.22 #6@18	4.97	-6.45	-6.61	0.31 #7@18	5.39	-7.09	-8.17	0.38 #7@18	5.81	-7.73	-9.74	0.45 #8@18	24.5	57	55	57	58	59	61	61	63	10
12	4.57	-9.41	-3.74	0.15 #5@18	4.93	-10.31	-5.55	0.26 #6@18	5.28	-11.21	-7.32	0.34 #7@18	5.64	-12.12	-9.13	0.42 #8@18	29.1	74	69	68	70	71	72	74	76	12
14	4.62	-14.23	-1.98	0.09 #4@18	4.94	-15.44	-4.05	0.19 #5@18	5.25	-16.60	-6.01	0.28 #6@18	5.56	-17.78	-8.01	0.37 #7@18	33.8	102	99	96	93	94	95	96	98	14
16	4.72	-20.00	+4.92	0.22 #5@15	5.00	-21.47	+2.68	0.12 #4@15	5.27	-22.90	-3.98	0.17 #5@15	5.55	-24.40	-6.25	0.29 #6@15	38.9	129	124	119	115	112	109	113	115	16
18	4.84	-27.06	+9.52	0.41 #6@11½	5.09	-28.84	+7.10	0.31 #5@11½	5.34	-30.24	+4.63	0.20 #4@11½	5.59	-32.37	-3.80	0.18 #4@11½	43.8	172	164	158	158	152	147	143	145	18
20	5.13	-36.78	+16.25	0.59 #6@9	5.36	-38.89	+13.06	0.48 #6@9	5.59	-40.98	+10.92	0.40 #5@9	5.81	-42.97	+8.29	0.30 #5@9	51.7	231	220	211	211	203	203	196	196	20
22	5.31	-47.11	+22.87	0.83 #9@14	5.52	-49.53	+20.49	0.75 #9@14	5.72	-51.89	+17.62	0.64 #8@14	5.94	-54.27	+14.69	0.54 #8@14	57.4	307	291	291	281	271	271	264	264	22
24	5.64	-60.67	+33.31	1.05 #10@11½	5.83	-63.21	+30.19	0.95 #9@11½	6.02	-65.94	+27.21	0.86 #9@11½	6.21	-68.65	+24.13	0.76 #8@11½	66.5	366	366	353	353	353	341	341	331	24
26	5.80	-75.32	+40.3	1.35 #11@14	5.98	-78.30	+36.9	1.23 #11@14	6.16	-81.29	+33.6	1.17 #11@14	6.34	-84.23	+31.4	1.05 #10@14	77.8	400	400	400	400	382	382	382	371	26
28	6.14	-93.30	+53.1	1.55 #9@7	6.32	-96.66	+50.2	1.47 #9@7	6.48	-99.85	+46.8	1.37 #11@14	6.64	-103.14	+43.9	1.28 #11@14	90.8	492	470	470	470	470	470	451	451	28
30	6.33	-112.04	+56.0	1.63 #9@7	6.49	-115.69	+52.8	1.54 #9@7	6.65	-119.29	+49.9	1.43 #9@7	6.80	-122.80	+46.9	1.36 #9@7	103.6	543	543	543	543	518	518	518	518	30
32	6.67	-135.31	+68.3	1.76 #10@7	6.82	-139.31	+65.4	1.69 #9@7	6.97	-143.23	+62.2	1.60 #9@7	7.11	-147.00	+59.3	1.52 #9@7	117.3	620	620	620	620	620	594	594	594	32
34	6.89	-160.12	+80.4	2.08 #10@7	7.03	-163.83	+77.1	2.00 #10.7	7.16	-168.32	+74.0	1.91 #10@7	7.30	-172.53	+70.8	1.83 #10@7	126.7	776	776	776	745	745	745	745	745	34
36	7.22	-189.28	+99.1	2.30 #10@6½	7.35	-193.78	+96.2	2.24 #10@6½	7.48	-198.21	+88.6	2.18 #10@6½	7.61	-202.63	+85.1	2.00 #10@6½	141.4	854	854	854	820	820	820	820	820	36

NOTE: For walls with seats less than 7'-0", the concrete quantity shall be increased by 2% per foot of variation.

NOTE TO DESIGNERS: The footing 'F' dimension should be checked for compliance with current Bridge Design Specifications. The dimension and concrete quantity should be adjusted accordingly. A future revision will correct the non-complying portions of this table.

CANTILEVER ABUTMENT — PILE FOOTING

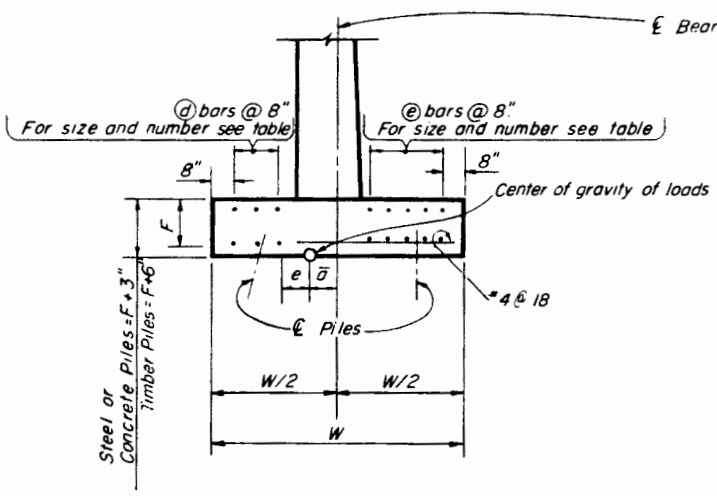

TYPE I
H10 thru H14

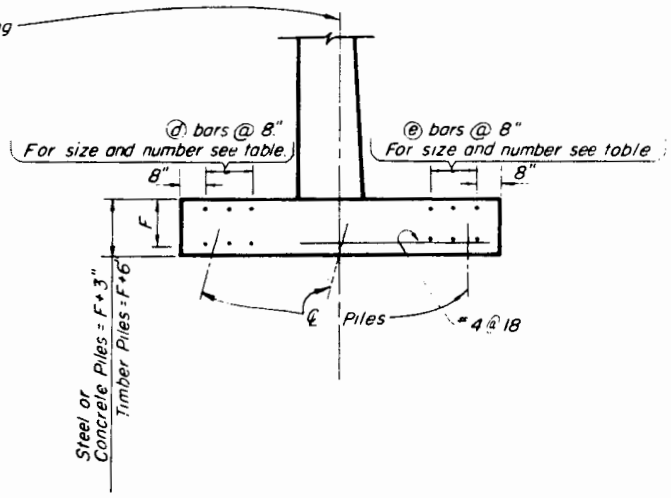

TYPE II
H16 thru H20

NOTE:
Reinforcement detailed is in addition to that detailed for spread footing.

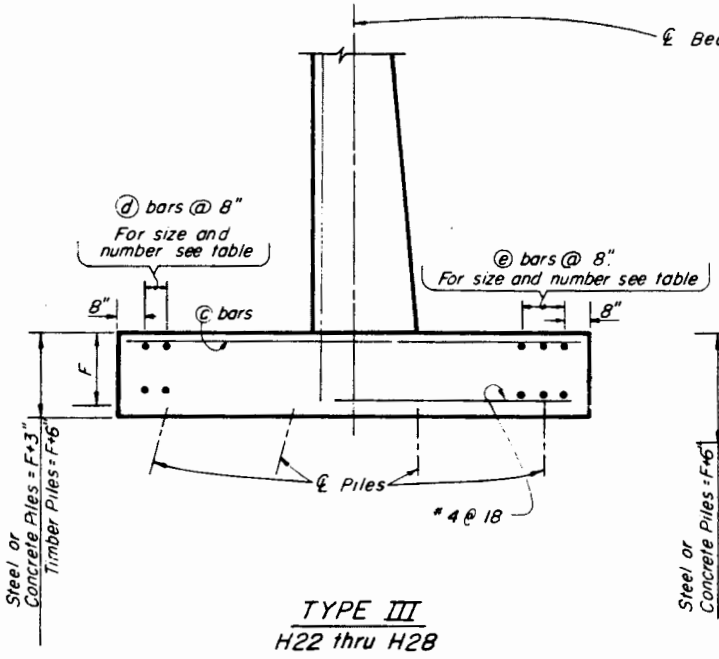

TYPE III
H22 thru H28

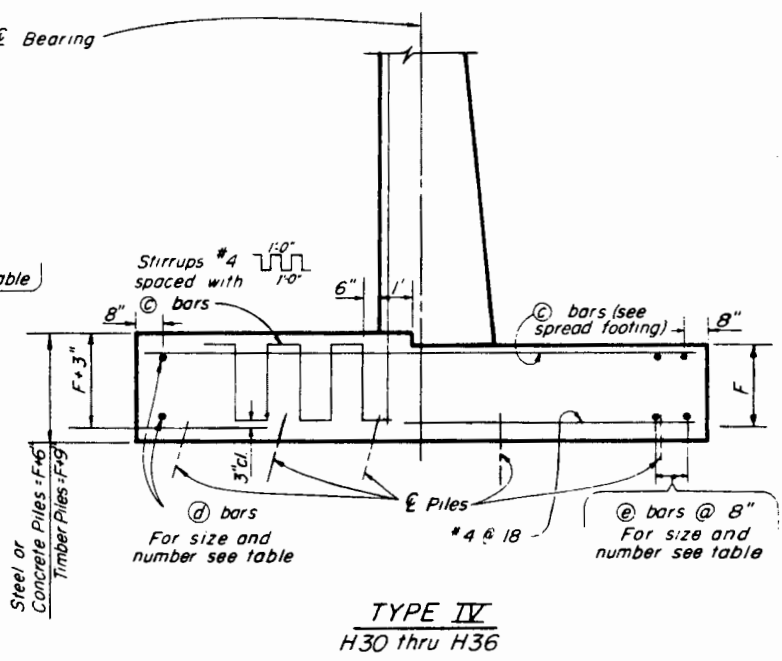

TYPE IV
H30 thru H36

LEGEND

N = number of piles per line

S = pile spacing in feet between lines.

$\bar{a}$ = distance from ℄ bearing to center of gravity of pile pattern

e = eccentricity from center gravity of pile pattern

I = moment of inertia of one line of piles

I/C_t = section modulus one pile line, toe pile

I/C_h = section modulus one pile line, heel pile

$$S = \frac{L}{\Sigma V\left(\frac{1}{N} \pm \frac{e}{I/C}\right)}$$

$$A = \left(\frac{1}{N} + \frac{e}{I/C_t}\right)$$ toe pile, 36 lbs fl pressure

$$B = \left(\frac{1}{N} - \frac{e}{I/C_h}\right)$$ heel pile, 27 lbs fl pressure

T = horizontal thrust in kips per line of piles

L = Allowable pile loading.

For 45 ton piles: L = 85.5 kips battered toe pile.
90.0 kips plumb heel pile.

All values on this sheet are based on 45 ton piles.

Lateral resistance of each vertical pile in bending is limited to 15% of the axial load. Balance of lateral forces taken by the battered piles

In cases of special foundation situations, values should be subject to review.

CANTILEVER ABUTMENT - PILE FOOTING

PILE LOADINGS FOR ABUTMENT PILE FOOTINGS

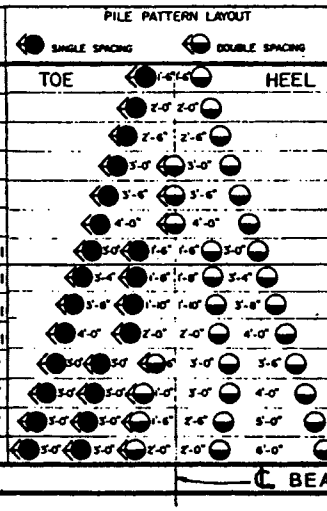

H	W	TYPE	PILE PATTERN PROPERTIES: N	1/N	s	I	I/c_t	I/c_h	QUANTITIES: d Bars	e Bars	conc. cf/ft	BAR REINFORCING STEEL (LBS/FT) APPLIED SUPERSTRUCTURE LOAD: 0	5	7.5	10	12.5	15	17.5	20	H
10	6	I	1.5	0.667	0.50	3.00	3.00	1.56	6-#10	10-#11	26.0	139	137	136	137	138	140	140	142	10
12	7	I	1.5	0.667	0.67	5.33	4.00	2.00	6-#9	10-#11	30.8	140	135	134	133	134	135	137	139	12
14	8	I	1.5	0.667	0.83	8.34	5.00	2.51	6-#8	6-#11	35.8	154	151	148	145	142	143	144	146	14
16	9	II	2.0	0.500	0.75	12.37	5.50	3.30	6-#8	6-#11	41.1	181	176	171	167	164	161	161	163	16
18	10	II	2.0	0.500	0.87	16.85	6.41	3.86	4-#9	6-#10	46.3	216	208	202	202	196	191	187	185	18
20	11	II	2.0	0.500	1.00	22.00	7.33	4.40	2-#10	4-#10	54.5	262	251	242	242	234	234	227	227	20
22	12	III	3.0	0.333	1.00	30.7	8.76	5.58	4-#8	6-#10	60.4	349	333	333	323	313	313	306	306	22
24	13	III	3.0	0.333	1.11	38.0	9.78	6.22	2-#10	6-#8	69.7	397	397	384	384	384	372	372	362	24
26	14	III	3.0	0.333	1.22	45.9	10.72	6.82	2-#9	4-#9	77.6	400	400	400	400	382	382	382	371	26
28	15	III	3.0	0.333	1.33	54.6	11.70	7.45	2-#8	4-#8	90.8	492	470	470	470	470	470	451	451	28
30	16	IV	3.5	0.286	1.57	71.6	14.52	8.88	2-#8	4-#8	103.6	543	543	543	543	518	518	518	518	30
32	17	IV	3.5	0.286	1.86	82.4	16.02	9.30	2-#8	2-#10	117.3	620	620	620	620	620	594	594	594	32
34	18	IV	3.5	0.286	2.21	91.6	17.30	9.44	2-#8	2-#10	126.7	776	776	776	745	745	745	745	745	34
36	19	IV	3.5	0.286	2.57	101.6	18.70	9.62	2-#7	2-#10	141.4	854	854	854	820	820	820	820	820	36

APPLIED SUPERSTRUCTURE LOAD (K/FT.)

H	0: ΣV	e 36#	e 27#	A	B	S	T	5: ΣV	e 36#	e 27#	A	B	S	T	7.5: ΣV	e 36#	e 27#	A	B	S	T	10: ΣV	e 36#	e 27#	A	B	S	T	H
10	5.64	1.17	.56	1.058		12.0	46.0	10.64	.38	.06	.794		10.1	32.4	13.14	.22	-.04	.740		8.80	28.2	15.64	.10	-.12		.744	7.74	24.6	10
12	7.98	1.05	.37	.930		11.5	49.1	12.98	.39	-.03	.765		8.61	36.6	15.46	.21	-.13	.719		7.68	32.6	17.98	.09	-.21		.772	6.48	27.5	12
14	10.55	.97	.23	.861		9.41	51.2	15.55	.39	-.11	.745		7.38	40.2	16.05	.22	-.21		.751	6.65	36.2	20.55	.09	-.26		.779	5.62	30.6	14
16	13.39	1.14	.34	.709		9.02	61.2	18.39	.63	.04	.616		7.55	51.1	20.89	.46	-.05	.584		6.99	47.3	23.39	.34	-.13	.562		6.50	44.0	16
18	16.45	1.13	.25	.676		7.68	63.3	21.45	.66	-0.01	.603		6.60	54.4	23.95	0.50	-.10	.578		6.17	51.0	26.45	.37	-.17	.558		5.79	47.7	18
20	20.17	1.20	.23	.664		6.40	64.4	25.17	.76	-.01	.604		5.63	56.9	27.67	.61	-.10	.583		5.30	53.5	30.17	.47	-.18	.564		5.03	50.8	20
22	23.78	1.35	.28	.487		7.39	88.1	28.78	.94	.05	.440		6.75	80.4	31.28	.78	-.03	.422		6.47	77.0	33.78	.65	-.10	.407		6.21	73.8	22
24	28.11	1.44	.27	.480		6.34	89.0	33.11	1.05	.07	.440		5.86	62.3	35.61	.91	-.02	.426		5.63	79.0	38.11	.77	-.09	.412		5.45	76.4	24
26	32.29	1.45	.21	.468		5.66	91.8	37.29	1.09	.02	.435		5.26	85.2	39.79	.94	-.06	.421		5.10	82.6	42.29	.82	-.13	.409		4.95	80.2	26
28	37.30	1.55	.21	.466		4.91	91.8	42.30	1.21	.03	.436		4.63	86.5	44.60	1.07	-.05	.425		4.50	84.1	47.30	.94	-.12	.413		4.38	81.9	28
30	42.08	1.42	.01	.384		5.29	111.5	47.08	1.11	-.16	.362		5.01	105.0	49.58	.97	-.23	.353		4.88	102.0	52.08	.85	-.29	.345		4.76	100.0	30
32	47.65	1.33	.18	.369		4.83	115.7	52.65	1.03	-.35	.350		4.62	110.5	55.35	.90	-.41	.342		4.52	108.0	57.65	.76	-.47	.335		4.41	105.0	32
34	53.25	1.11	.49	.350		4.58	122.1	56.25	.82	-.64	.333		4.41	117.5	60.75	.	-.71		.361	4.10	109.0	63.25	.58	-.76		.367	3.87	103.0	34
36	59.65	.93	-.72	.336		4.26	127.0	64.65	.66	-.89		.379	3.68	110.0	67.15		-.95		.385	3.48	104.0	69.65	.43	-1.01		.391	3.30	98.4	36

APPLIED SUPERSTRUCTURE LOAD (K/FT.)

H	12.5: ΣV	e 36#	e 27#	A	B	S	T	15: ΣV	e 36#	e 27#	A	B	S	T	17.5: ΣV	e 36#	e 27#	A	B	S	T	20: ΣV	e 36#	e 27#	A	B	S	T	H
10	18.14	.02	-.17		.776	6.39	20.5	20.64	-.05	-.21		.802	5.44	17.5	23.14	-.09	-.24		.821	4.74	15.2	25.64	-.13	-.27		.840	4.18	13.4	10
12	20.48	0.00	-.27		.802	5.48	23.3	22.98	-.07	-.31		.822	4.76	20.2	25.48	-.13	-.34		.837	4.21	17.9	27.98	-.18	-.37		.852	3.78	16.1	12
14	23.05	-.01	-.34		.804	4.85	26.5	25.55	-.09	-.39		.822	4.29	23.4	28.05	-.15	-.43		.836	3.82	20.8	30.55	-.21	-.46		.850	3.47	18.9	14
16	25.89	.23	-.19		.588	6.09	41.2	28.39	.14	-.24		.573	5.54	37.5	30.89	.07	-.28		.585	4.98	33.7	33.39	-.01	-.31		.594	4.53	30.7	16
18	28.95	.27	-.23		.560	5.44	44.8	31.45	.18	-.28		.573	4.99	41.1	33.95	.07	-.32		.583	4.55	37.5	36.45	-0.00	-.36		.593	4.16	34.9	18
20	32.67	.36	-.24		.555	4.76	46.3	35.17	.26	-.29		.566	4.52	45.6	37.67	.18	-.34		.577	4.14	41.8	40.17	.08	-.38		.586	3.82	38.6	20
22	36.26	.54	-.17	.395		5.96	71.0	38.78	.44	-.22	.383		5.76	68.6	41.28	.35	-.27		.381	5.55	66.1	43.78	.28	-.31		.389	5.28	62.9	22
24	40.61	.66	-.15	.400		5.26	73.6	43.11	.55	-.20	.389		5.09	71.2	45.61	.46	-.26	.380		4.94	69.1	48.11	.38	-.30		.381	4.77	66.8	24
26	44.79	.70	-.19	.398		4.79	77.6	47.29	.60	-.26	.388		4.65	75.3	49.79	.51	-.29	.381		4.51	73.0	52.29	.43	-.34		.383	4.37	70.8	26
28	49.80	.83	-.18	.404		4.26	79.5	52.30	.73	-.23	.395		4.14	77.4	54.80	.63	-.28	.387		4.04	75.5	57.30	.54	-.33	3.79		3.94	73.6	28
30	54.58	.74	-.35	.337		4.64	97.4	57.08	.63	-.40		.331	4.53	95.2	59.56	.54	-.45		.337	4.42	93.0	62.08	.46	-.51		.343	4.23	88.9	30
32	60.35	.67	-.53		.343	4.33	103.0	62.85	.57	-.58		.348	4.10	98.0	65.35	.48	-.63		.354	3.89	93.1	67.85	.39	-.67		.356	3.71	88.8	32
34	65.75	.47	-.82		.373	3.68	98.2	68.25	.37	-.87		.378	3.49	92.7	70.75	.29	-.92		.363	3.32	88.3	73.25	.20	-.96		.388	3.17	84.3	34
36	72.15	.33	-1.06		.397	3.15	93.9	74.65	.23	-1.11		.402	2.99	89.1	77.15	.11	-1.16		.407	2.87	85.4	79.65	.06	-1.21		.412	2.75	81.9	36

NOTES: The values of "S" given are maximum allowable. Where only values of "A" are listed the toe pile governs. When "B" values only are listed the heel pile governs.
For other pile loadings obtain the required spacing by proportion, for example: allowable pile loading - 60 tons, multiply values of "S" in the table by 60/45.

BAR REINFORCING QUANTITIES ARE TOTAL QUANTITIES INCLUDING STEEL IN ABUTMENT AND FOOTING.

H	FOOTING DATA W	C	B	PILE PATTERN LAYOUT (P ← Layout Line → Q)	Pile Type	Surcharge	CONCRETE PILES Values of IV, IH and H' are kips/ft. F+3	IV	IH	Pso	Qso	H'so	Pss	Qss	H'ss	STEEL PILES Values of IV, IH and H' are kips/ft. F+6	IV	IH	Pso	Qso	H'so
4	4'-2"	1'-4"	2'-10"	1'-3"	I	2' level	1'-5"	2.52	0.92	12'-0"	18'-0"	4.04	12'-0"	18'-0"	3.47	1'-8"	2.63	0.99	12'-0"	18'-0"	3.47
						2:1		2.49	0.74	12'-0"	18'-0"	4.04	12'-0"	18'-0"	3.47		2.52	0.80	12'-0"	18'-0"	3.47
						1½:1		3.00	1.11	12'-0"	18'-0"	4.04	12'-0"	18'-0"	3.47		3.06	1.20	12'-0"	18'-0"	3.47
6	4'-2"	1'-4"	2'-10"	1'-3"	I	2' level	1'-5"	4.05	1.53	12'-0"	18'-0"	4.04	12'-0"	18'-0"	3.47	1'-8"	4.20	1.61	12'-0"	18'-0"	3.47
						2:1		4.12	1.45	12'-0"	18'-0"	4.04	12'-0"	18'-0"	3.47		4.19	1.55	12'-0"	18'-0"	3.47
						1½:1		5.10	2.25	12'-0"	18'-0"	4.04	12'-0"	18'-0"	3.47		5.20	2.36	12'-0"	18'-0"	3.47
8	5'-2"	1'-8"	3'-6"	4" 1'-8"	I	2' level	1'-5"	5.89	2.27	12'-0"	18'-0"	4.04	10'-8"	18'-0"	3.82	1'-8"	6.08	2.38	12'-0"	18'-0"	3.82
						2:1		6.16	2.39	12'-0"	18'-0"	4.04	11'-6"	18'-0"	3.60		6.25	2.50	12'-0"	18'-0"	3.60
						1½:1		6.89	3.06	12'-0"	18'-0"	4.04	9'-7"	18'-0"	4.16		7.01	3.29	12'-0"	18'-0"	4.16
10	5'-2"	2'-0"	4'-2"	6" 2'-6"	I	2' level	1'-5"	8.07	3.18	12'-0"	18'-0"	4.04	8'-11"	18'-0"	4.70	1'-8"	8.30	3.29	12'-0"	18'-0"	4.70
						2:1		8.62	3.55	12'-0"	18'-0"	4.04	9'-0"	16'-7"	4.45		8.76	3.69	12'-0"	18'-0"	4.45
						1½:1		9.49	4.31	11'-1"	18'-0"	4.49	8'-3"	18'-0"	4.72		9.66	4.47	11'-3"	18'-0"	4.72
12	7'-2"	2'-4"	4'-10"	10" 3'-3"	I	2' level	1'-5"	10.57	4.21	10'-2"	18'-0"	5.10	7'-2"	14'-4"	6.01	1'-8"	10.84	4.35	9'-9"	18'-0"	6.01
						2:1		11.51	4.96	9'-8"	16'-5"	5.09	6'-10"	12'-0"	5.94		11.67	5.10	9'-5"	15'-10"	5.94
						1½:1		12.02	5.35	8'-11"	18'-0"	5.38	6'-3"	13'-2"	6.25		12.23	5.54	8'-7"	18'-0"	6.25
14	8'-0"	2'-8"	5'-4"	1'-2" 3'-8"	I	2' level	1'-6"	13.03	5.40	8'-5"	16'-10"	6.22	5'-11"	11'-10"	7.36	1'-8"	13.33	5.55	8'-0"	16'-0"	7.36
						2:1		14.40	6.49	7'-5"	13'-0"	6.58	5'-5"	9'-3"	7.50		14.65	6.70	7'-2"	13'-9"	7.50
						1½:1		14.86	6.86	7'-0"	14'-0"	6.80	5'-1"	10'-7"	7.33		15.10	7.05	6'-10"	13'-3"	7.33
16	9'-0"	3'-0"	6'-0"	1'-6" 4'-6"	I	2' level	1'-6"	16.13	6.74	6'-11"	13'-10"	7.61	4'-10"	9'-8"	9.08	1'-8"	16.48	6.89	7'-0"	14'-0"	9.08
						2:1		18.25	8.34	5'-9"	9'-10"	8.55	4'-4"	7'-0"	9.48		18.37	8.54	5'-7"	10'-3"	9.48
						1½:1		18.39	8.00	6'-0"	9'-6"	8.28	4'-3"	6'-9"	9.70		19.70	8.16	5'-11"	9'-11"	9.70
18	10'-0"	3'-4"	6'-8"	1'-10" 1'-3" 3'-7"	II	2' level	1'-7"	19.37	8.21	6'-11"	13'-10"	9.71	4'-10"	9'-8"	11.46	1'-8"	19.94	8.39	6'-6"	13'-6"	11.46
						2:1		22.16	10.42	5'-11"	9'-9"	10.58	4'-4"	6'-11"	12.04		22.54	10.65	5'-10"	10'-9"	12.04
						1½:1		22.31	9.95	6'-2"	9'-4"	10.34	4'-3"	6'-8"	12.29		22.90	10.18	5'-11"	9'-11"	12.29
20	11'-0"	3'-8"	7'-4"	2'-1" 11" 4'-10"	II	2' level	1'-7"	23.63	9.95	5'-8"	11'-4"	11.81	4'-0"	8'-0"	13.90	1'-10"	24.04	10.18	5'-6"	11'-0"	13.90
						2:1		27.00	12.87	4'-10"	8'-1"	12.88	3'-5"	6'-9"	14.85		27.47	13.13	4'-10"	9'-0"	14.85
						1½:1		27.39	12.31	4'-11"	8'-9"	12.68	3'-5"	6'-3"	14.95		27.87	12.55	4'-10"	8'-8"	14.95
22	12'-0"	4'-0"	8'-0"	2'-2" 1'-0" 4'-11"	III	2' level	1'-9"	28.02	11.81	5'-1"	10'-2"	14.40	3'-7"	7'-2"	16.86		28.47	12.10	5'-0"	10'-0"	
						2:1		32.26	15.60	4'-3"	9'-9"	15.72	3'-0"	6'-11"	18.40	2'-0"	32.84	15.90	4'-2"	9'-9"	
						1½:1		32.70	14.95	4'-3"	9'-5"	16.00	3'-0"	6'-8"	18.44		33.28	15.21	4'-2"	9'-2"	
24	13'-3"	4'-5"	8'-10"	2'-11" 1' 7'-0"	IV	2' level	1'-11"	33.50	13.93	5'-0"	10'-0"	15.85	3'-6"	7'-0"	19.00		34.00	14.16	4'-11"	9'-10"	
						2:1		36.96	18.71	4'-9"	8'-8"	19.00	3'-6"	6'-2"	20.10	2'-2"	37.67	19.00	4'-8"	8'-5"	
						1½:1		37.45	17.95	5'-0"	8'-4"	18.15	3'-6"	5'-11"	21.10		38.16	18.25	4'-11"	8'-2"	
26	14'-3"	4'-9"	9'-6"	3'-3" 3'-9" 4'-1"	V	2' level	2'-2"	38.94	16.31	5'-4"	10'-8"	19.60	3'-9"	7'-6"	23.30		39.47	16.60	5'-2"	10'-4"	
						2:1		45.38	22.09	4'-4"	8'-8"	22.15	3'-0"	6'-1"	26.30	2'-5"	46.19	22.41	4'-3"	8'-5"	
						1½:1		45.89	21.20	4'-4"	8'-1"	22.35	3'-0"	6'-0"	26.30		46.72	21.50	4'-3"	8'-3"	
28	15'-3"	5'-1"	10'-2"	3'-0" 1' 2'-5" 3'-0" 3'-1"	VI	2' level	2'-5"	44.90	18.86	5'-4"	10'-8"	27.20	3'-9"	7'-6"	31.80		45.47	19.14	5'-3"	10'-6"	
						2:1		52.60	25.79	4'-4"	11'-4"	31.10	3'-0"	8'-1"	36.20	2'-8"	53.53	26.10	4'-2"	11'-6"	
						1½:1		53.04	24.66	4'-4"	10'-8"	31.20	3'-0"	7'-8"	36.40		54.09	25.04	4'-3"	10'-6"	
30	16'-9"	5'-5"	11'-4"	3'-0" 1' 2'-1" 3'-3" 4'-3"	VII	2' level	2'-7"	51.01	21.57	5'-0"	10'-0"	26.80	3'-5"	6'-10"	31.60		51.62	21.70	4'-11"	9'-10"	
						2:1		59.99	29.53	3'-10"	12'-0"	34.70	3'-0"	10'-0"	35.95	2'-10"	61.04	29.78	3'-10"	12'-0"	
						1½:1		60.58	28.39	3'-10"	12'-0"	34.70	3'-0"	8'-7"	36.00		61.69	28.75	3'-10"	11'-8"	
32	18'-3"	5'-10"	12'-5"	3'-0" 1'-4" 1'-8" 4'-8" 4'-7"	VII	2' level	3'-1"	59.00	24.70	4'-7"	9'-2"	30.00				3'-4"	59.70	25.00	4'-7"	9'-2"	
						2:1		69.60	34.30	3'-10"	13'-3"	34.50					70.40	34.70	3'-9"	13'-2"	
						1½:1		60.90	26.60	4'-0"	14'-0"	33.00					61.60	27.00	3'-11"	13'-10"	
34	19'-3"	6'-3"	13'-0"	3'-0" 1'-9" 1'-3" 5'-2" 5'-1"	VII	2' level	3'-6"	67.00	27.80	4'-2"	8'-4"	33.00				3'-9"	67.70	28.10	4'-1"	8'-2"	
						2:1		79.20	38.90	3'-4"	11'-8"	39.40					80.00	39.40	3'-3"	11'-4"	
						1½:1		69.40	29.50	3'-8"	12'-10"	33.80					70.10	30.70	3'-7"	12'-6"	
36	20'-3"	6'-7"	13'-8"	3'-0" 2'-1" 11" 5'-7" 5'-8"	VII	2' level	3'-10"	75.00	31.40	3'-6"	7'-0"	39.20				4'-1"	75.70	31.80	3'-5"	6'-10"	
						2:1		89.30	44.30	3'-0"	7'-6"	45.00					90.10	44.70	3'-0"	7'-6"	
						1½:1		78.10	32.90	3'-6"	10'-6"	38.10					78.80	33.30	3'-5"	10'-3"	

— See H'so Concrete Piles

DESIGN DATA:

Weight of earth = 120 lbs. per cu. ft. Equivalent fluid pressure, with 2 ft Level Surcharge = 27 to 36 lbs. per sq. ft. per ft. of height.

Horizontal and Vertical. Earth Pressures for 2:1 unlimited and 1½:1 limited are from A.R.E.A. graph. Appendix C 8-5-18, Soil Type I.

Lateral resistance (H') is limited to 13ᵏ each pile plus value of component of battered piles at 1:3.

Pile spacing P and Q is max. Reduce to suit length of footing.

Min. distance between any two piles is 3'-0".

Distance between center line of pile and edge of footing 1'-6" min., except 1'-4" min. for H = 4' to 8'.

For details, dimensions, and reinforcement see Type I Cantilever Retaining Wall.

The design assumes a lateral resistance of 13ᵏ per pile, if the allowable resistance is less, the pile spacing or batter must be adjusted to provide the proper lateral resistance.

Note

2:1 surcharges are unlimited

1½:1 surcharges are limited as follows :-

H4 8 6 Unlimited

H8 8 above 7'-0"

Subscript 90 indicates 45 ton piles.

Subscript 64 indicates 32 ton piles.

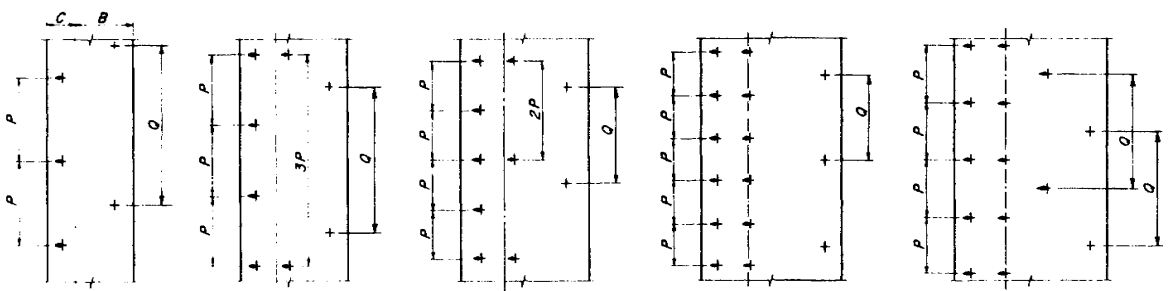

PLAN TYPE I — PLAN TYPE II — PLAN TYPE III — PLAN TYPE IV — PLAN TYPE V

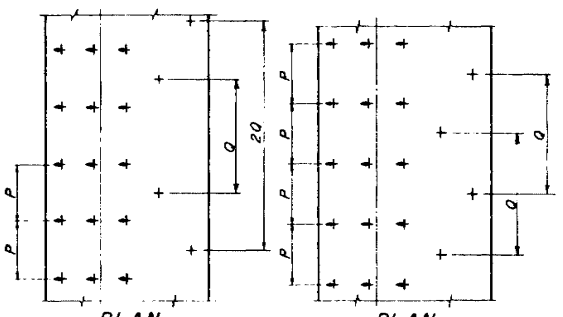

PLAN TYPE VI — PLAN TYPE VII

FOR OFFICE USE ONLY

BRIDGE DEPARTMENT
DESIGN SECTION

STATE OF CALIFORNIA
DEPARTMENT OF PUBLIC WORKS
DIVISION OF HIGHWAYS

PILE LAYOUT

TYPE I RETAINING WALL (H4-36)

SCALE | BRIDGE | FILE | DRAWING

PREL. DRAWING No. P

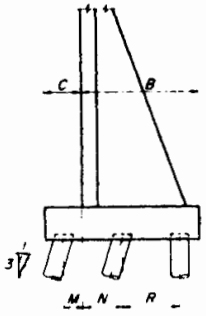

TYPICAL SECTION

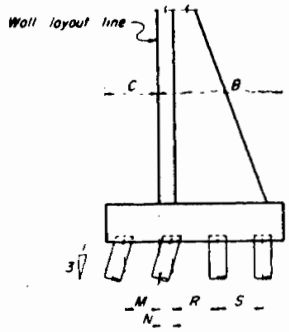

TYPICAL SECTION

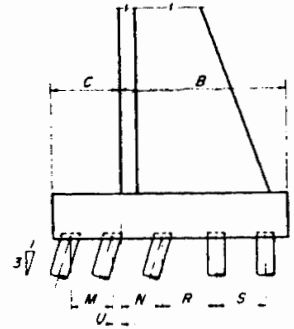

TYPICAL SECTION

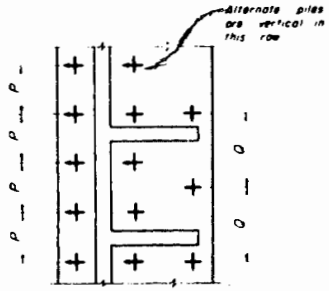

PLAN
H = 18' to 22'

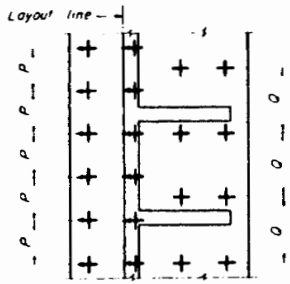

PLAN
H = 24' to 28'

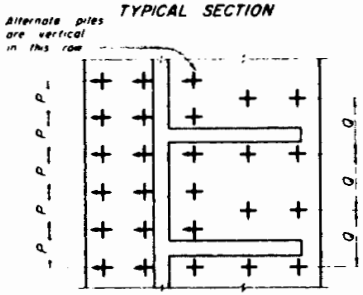

PLAN
H = 30' to 36'

DESIGN DATA: Piles are spaced for Type 3 Counterfort Retaining Wall.

Weight of earth = 120 lbs per cu ft and equivalent fluid pressure of 27 to 36 lbs per sq ft per ft of height.

Lateral resistance of each pile in bending is limited to 15% of axial pile load for 40 to 64 kip piles, 12% for 70 or 80 kip piles and 10% for 90 kip piles. Balance of lateral forces taken by battered piles. Batter to be adjusted to suit design conditions.

Pile spacing P and Q is max. Reduce to suit length of footing.

If the allowable lateral resistance of piles used is less than values listed in Design Data, the pile spacing or batter must be adjusted to provide the proper lateral resistance.

Min distance between any two piles is 3'-0"

Distance between center line pile and edge of footing 1'-6" min

For details, dimensions, and reinforcement see Type 3 Counterfort Retaining Wall

TABLE OF PILE SPACING

PILE LOAD — KIPS		H	18'	20'	22'	24'	26'	28'	30'	32'	34'	36'
		C	2'-10 1/4"	3'-1 1/2"	3'-4 1/2"	3'-7 1/2"	3'-10 1/2"	4'-1 1/2"	4'-4 1/2"	4'-7 1/2"	4'-10 1/2"	5'-1 1/2"
		B	8'-7 1/2"	9'-4 1/2"	10'-1 1/2"	10'-10 1/2"	11'-7 1/2"	12'-4 1/2"	13'-1 1/2"	13'-10 1/2"	14'-7 1/2"	15'-4 1/2"
		M	1'-4 1/2"	1'-7 1/2"	1'-10 1/2"	2'-1 1/2"	2'-4 1/2"	2'-7 1/2"	2'-10 1/2"	3'-0"	3'-0"	3'-6"
		N	2'-0 1/2"	1'-11 1/2"	2'-4 1/2"	0'-10 1/2"	0'-11 1/2"	0'-10 1/2"	3'-1 1/2"	3'-1 1/2"	3'-1 1/2"	3'-4 1/2"
		R	4'-5"	5'-5"	5'-2"	3'-6"	3'-9"	4'-0"	3'-0"	3'-9"	4'-3"	4'-6"
		S				4'-3"	4'-6"	5'-3"	3'-9"	4'-0"	4'-6"	4'-6"
		U							*0'-1 1/2"	0'-1 1/2"	0'-4 1/2"	0'-1 1/2"
	40	P	3'-10"	3'-4"	3'-0"	3'-0"						
	48	P	4'-8"	4'-0"	3'-6"	3'-8"	3'-2"	2'-10"	3'-2"			
	56	P	5'-6"	4'-8"	4'-0"	4'-4"	3'-8"	3'-4"	3'-8"	3'-4"		
	64	P	6'-2"	5'-4"	4'-6"	5'-0"	4'-2"	3'-10"	4'-2"	3'-10"	3'-4"	3'-0"
	70	P	6'-8"	5'-10"	5'-0"	5'-4"	4'-8"	4'-2"	4'-8"	4'-2"	3'-8"	3'-4"
	80	P	7'-8"	6'-8"	5'-8"	6'-0"	5'-2"	4'-8"	5'-2"	4'-8"	4'-2"	3'-10"
	90	P	8'-8"	7'-4"	6'-4"	6'-8"	5'-6"	5'-0"	5'-8"	5'-0"	4'-6"	4'-2"
	40	Q	5'-9"	5'-0"	4'-6"	4'-6"	4'-0"		4'-0"			
	48	Q	7'-0"	6'-0"	5'-3"	5'-6"	4'-9"	4'-3"	4'-9"	4'-3"	3'-9"	
	56	Q	8'-3"	7'-0"	6'-0"	6'-6"	5'-6"	5'-0"	5'-6"	5'-0"	4'-3"	4'-0"
	64	Q	9'-3"	8'-0"	6'-9"	7'-6"	6'-3"	5'-9"	6'-3"	5'-9"	5'-0"	4'-6"
	70	Q	10'-0"	8'-9"	7'-6"	8'-0"	7'-0"	6'-3"	7'-0"	6'-3"	5'-6"	5'-0"
	80	Q	11'-6"	10'-0"	8'-6"	9'-0"	7'-9"	7'-0"	7'-9"	7'-0"	6'-3"	5'-9"
	90	Q	13'-0"	11'-0"	9'-6"	10'-0"	8'-3"	7'-6"	8'-6"	7'-6"	6'-9"	6'-3"

* Measured on opposite side of layout line from that shown in typical section.

For office use only.

DESIGN SECTION

STATE OF CALIFORNIA
DEPARTMENT OF PUBLIC WORKS
DIVISION OF HIGHWAYS

PILE SPACING

TYPE 3 COUNTERFORT RETAINING WALL

SCALE None

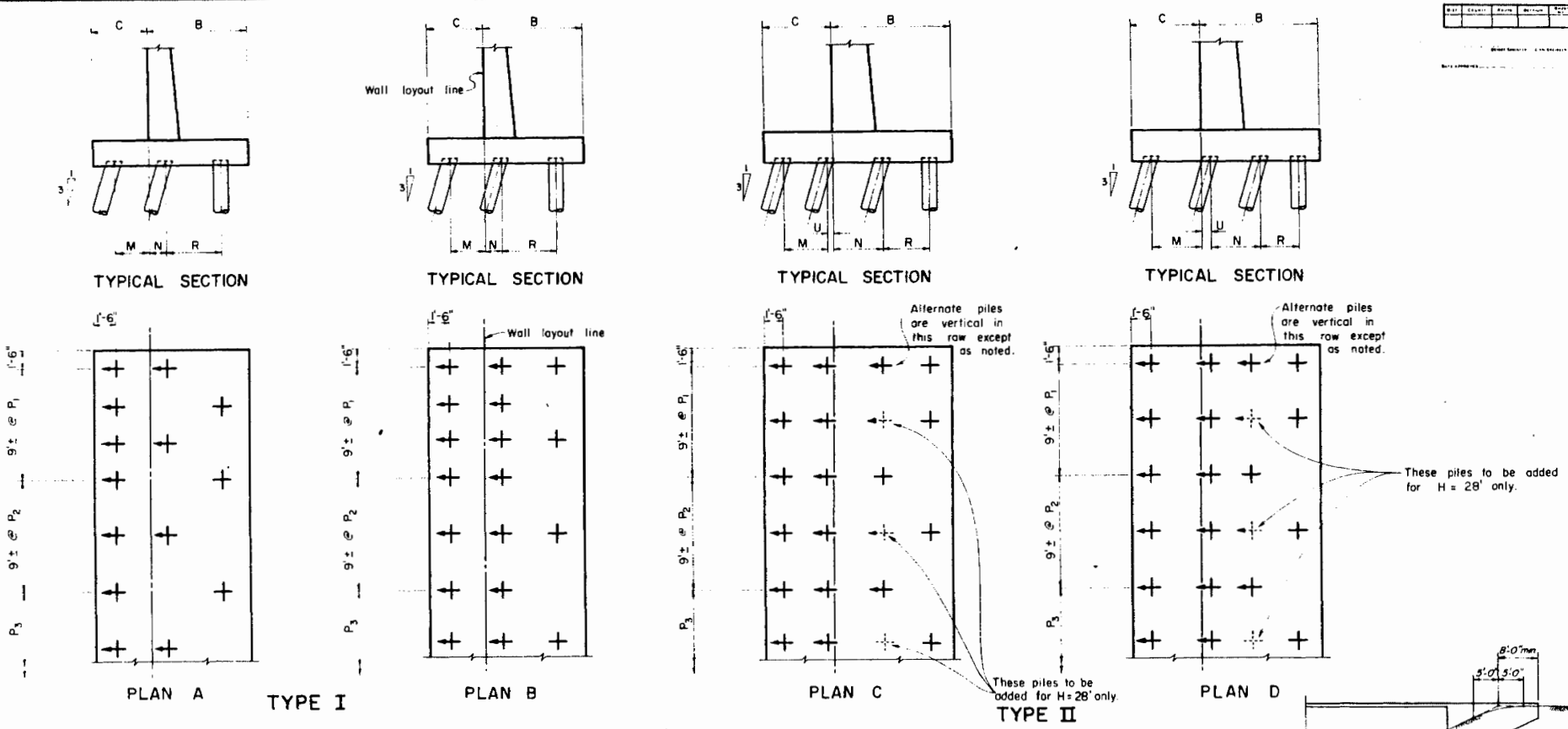

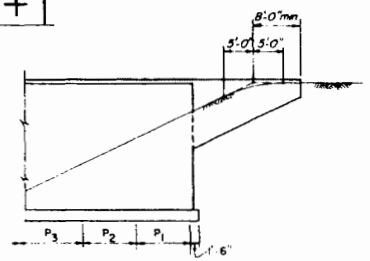

TYPICAL ELEVATION
FOR OFFICE USE ONLY

TABLE OF PILE SPACING										
H	20'		22'		24'		26'		28'	
Pile Load kips	64	90	64	90	64	90	64	90	64	90
C	3'-6"	3'-6"	4'-6"	4'-0"	4'-11"	4'-5"	5'-3"	4'-9"	5'-7"	5'-1"
B	7'-0"	7'-0"	8'-0"	8'-0"	8'-10"	8'-10"	9'-6"	9'-6"	10'-2"	10'-2"
M	2'-0"	2'-0"	3'-0"	2'-6"	3'-0"	2'-11"	3'-8"	3'-3"	4'-0"	3'-7"
N	1'-0"	1'-0"	1'-0"	1'-0"	3'-7"	3'-6"	4'-3"	3'-9"	4'-2"	3'-8"
R	4'-6"	4'-6"	5'-6"	5'-6"	3'-9"	3'-9"	3'-9"	3'-10"	4'-6"	4'-7"
U					0'-5"	0'-1"	0'-1"	0'-5"	0'-1"	0'-5"
P_1	3'-0"	4'-9"	3'-0"	3'-3"	3'-0"	4'-3"	3'-0"	3'-7"	3'-0"	3'-3"
P_2	3'-9"	5'-3"	3'-6"	4'-1"	4'-5"	6'-0"	4'-0"	4'-8"	3'-6"	4'-7"
P_3	4'-3"	6'-0"	4'-2"	5'-7"	4'-10"	6'-6"	4'-3"	5'-8"	3'-9"	5'-3"
PLAN	A	A	B	A	C	D	C	D	C	D

DESIGN DATA:

Weight of earth = 120 lbs per cu ft and equivalent fluid pressure of 27 to 36 lbs. per sq. ft. per ft. of height.

Passive pressure of earth on outer face of wall is considered in this design. Lateral resistance of each pile in bending is limited to 15% of axial pile load for 64 kip piles and 10% for 90 kip piles. Balance of lateral forces taken by battered piles.

Pile spacing P_1, P_2 and P_3 is maximum. Reduce to suit length of footing.

Min. distance between any two piles is 3'-0".

Distance between center of pile and edge of footing 1'-6" min.

For details, dimensions, and reinforcement see Wingwalls — Pile Footing

Note: If 32 ton piles are used, revise C and W dimensions on Standard Plan.

If the allowable lateral resistance of piles used is less than values listed in Design Data, the pile spacing or batter must be adjusted to provide the proper lateral resistance.

BRIDGE DEPARTMENT
DESIGN SECTION
Project Designer
Chief Designer
DESIGN
DETAILS
QUANTITIES
SPECIFICATIONS

STATE OF CALIFORNIA
DEPARTMENT OF PUBLIC WORKS
DIVISION OF HIGHWAYS

PILE SPACING

WINGWALLS — PILE FOOTING

SCALE None | BRIDGE | FILE | DRAWING

PREL. DRAWING NO. P

Pile Footings

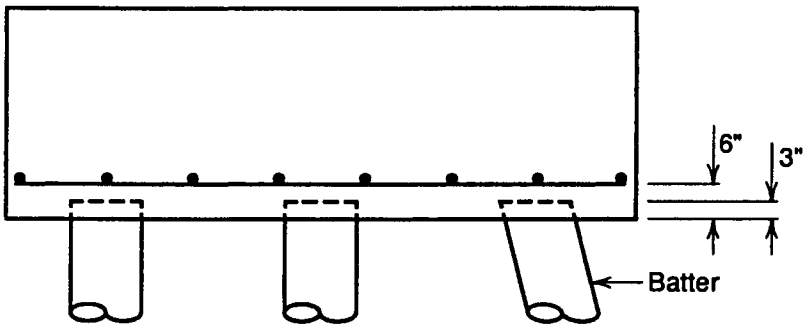

Concrete Piles

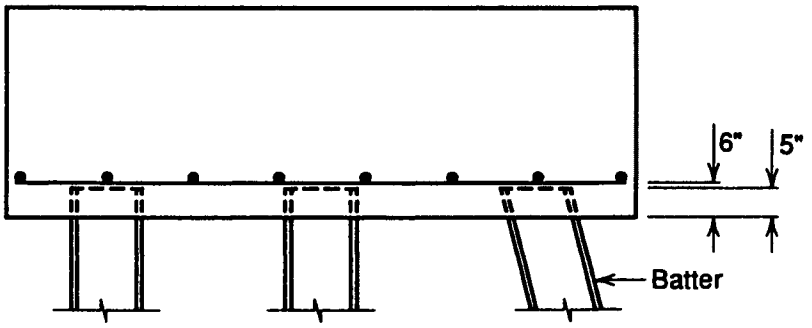

Steel Piles

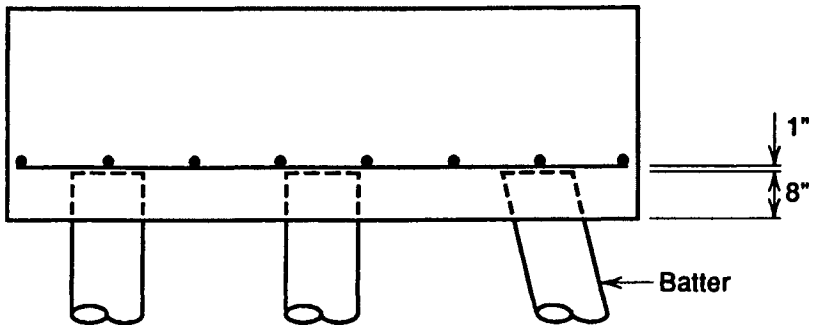

Timber Piles

Piles at Abutment Corners

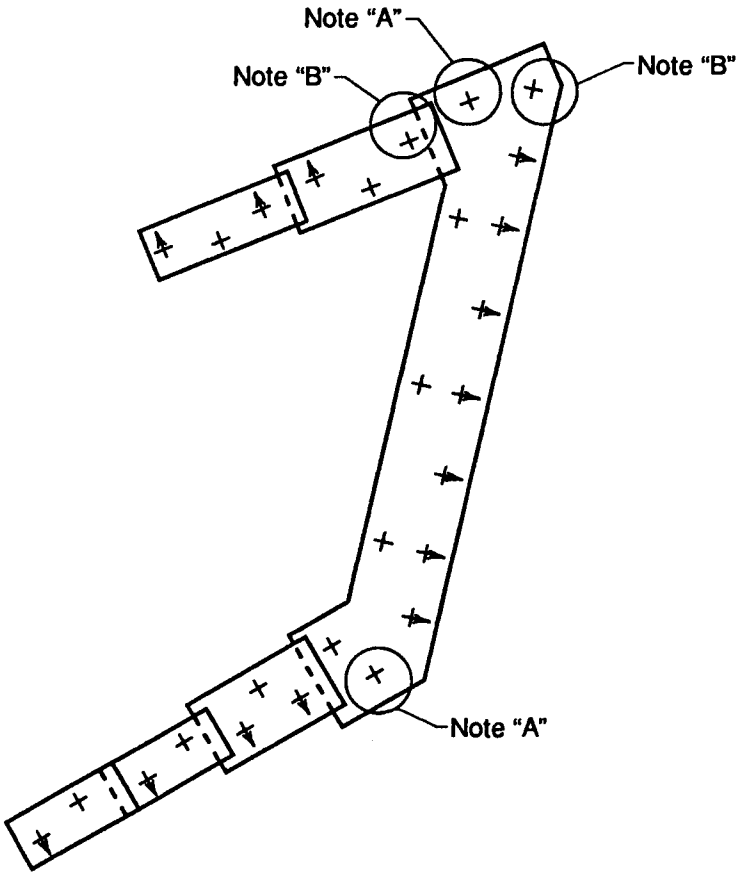

Note "A" Battered pile at this location is unnecessary. Pile should be vertical.

Note "B" Use vertical rather than battered piles at sharp acute corners where it may be difficult to drive battered piles.

Bearing Pad Location at Anchorage Blockout

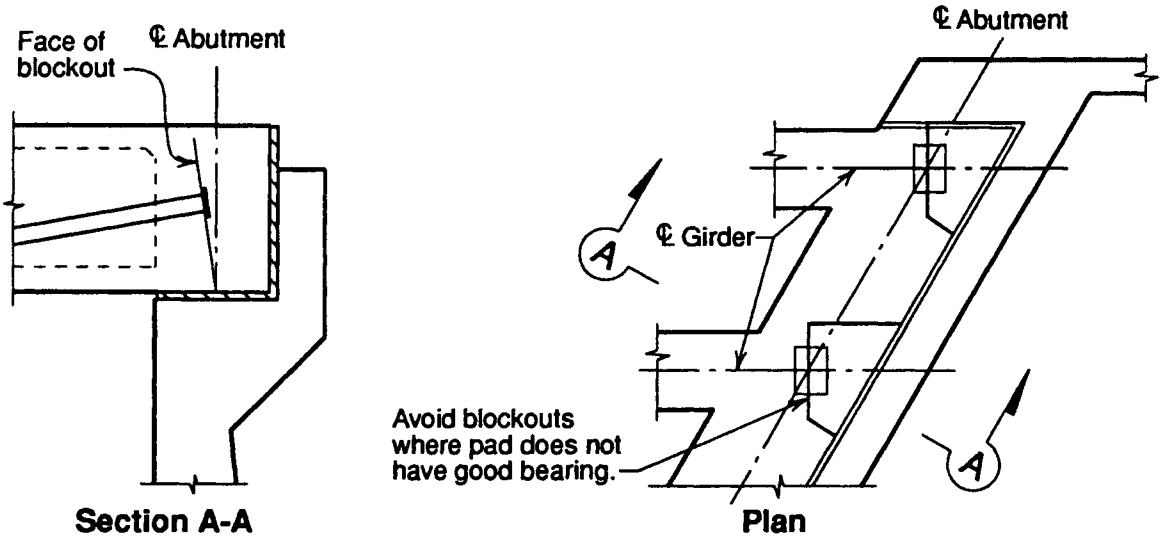

INCORRECT

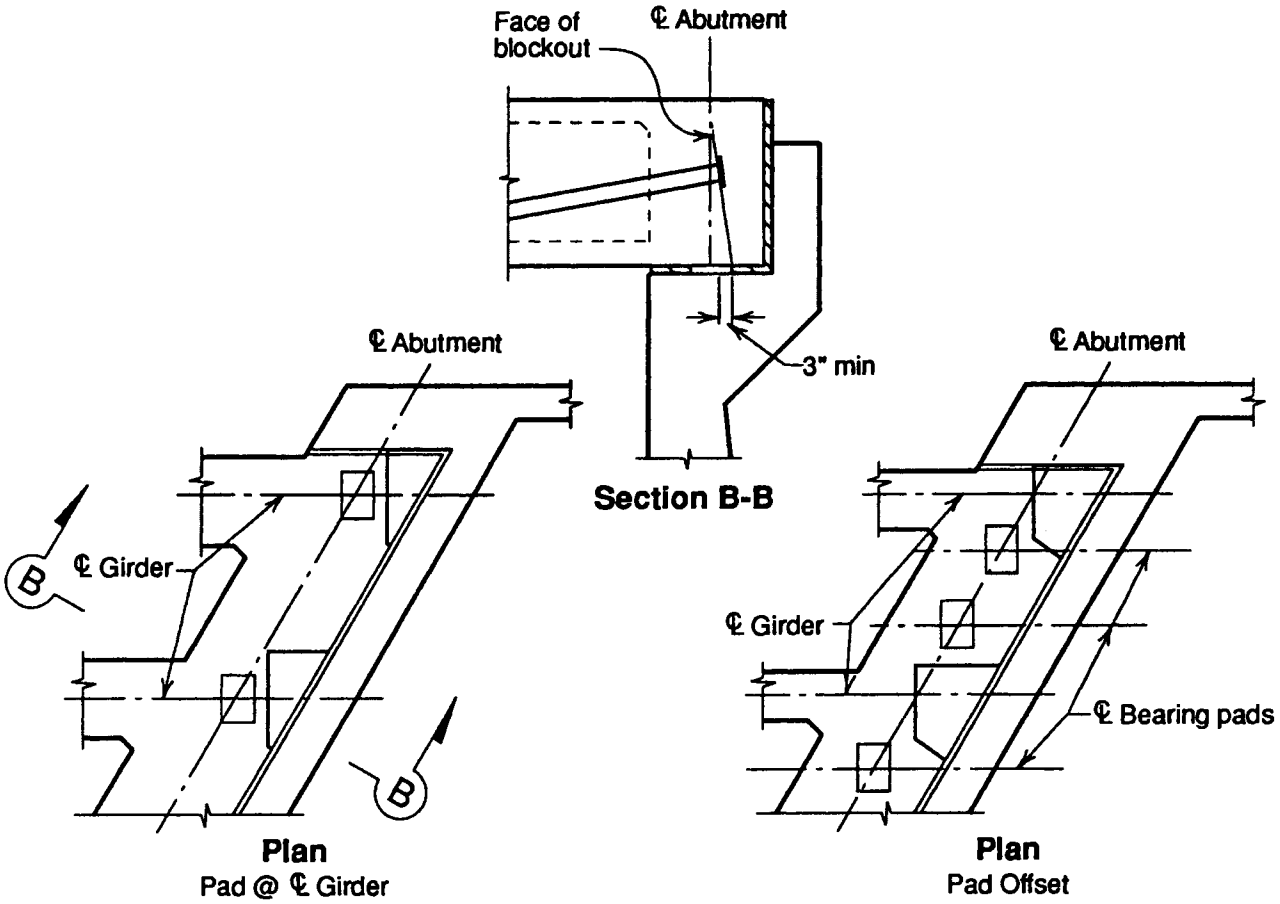

CORRECT

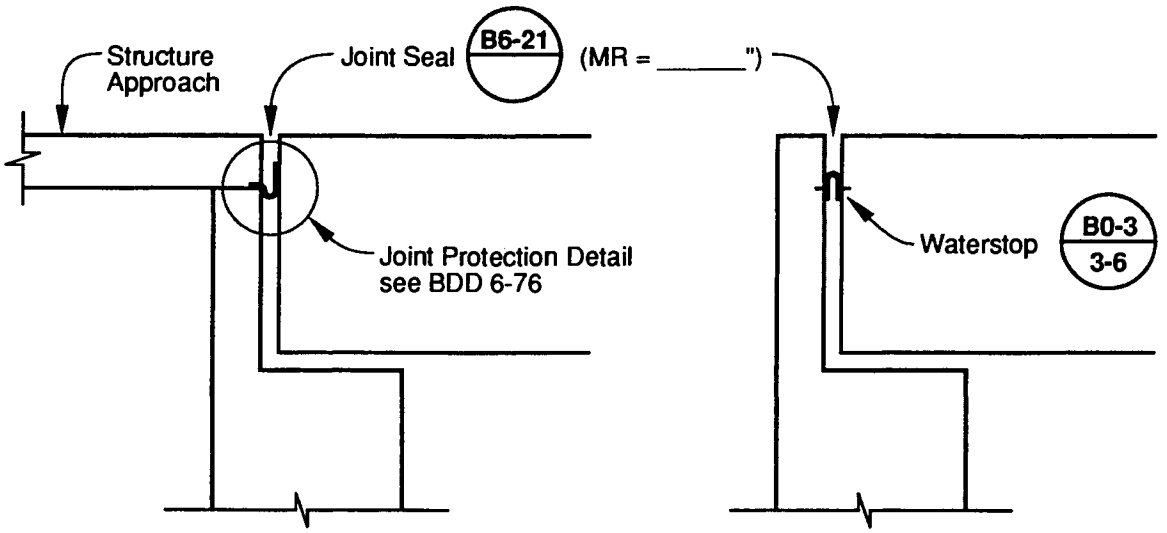

WITH STRUCTURE APPROACH

WITHOUT STRUCTURE APPROACH

MR ≤ 2"

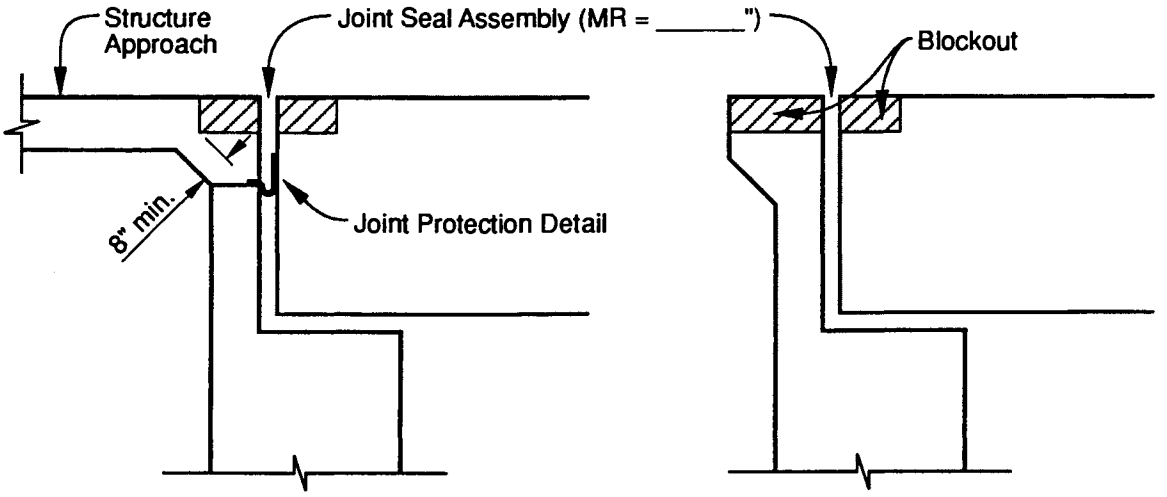

WITH STRUCTURE APPROACH

WITHOUT STRUCTURE APPROACH

MR ≥ 2 ½"

SEALED JOINTS

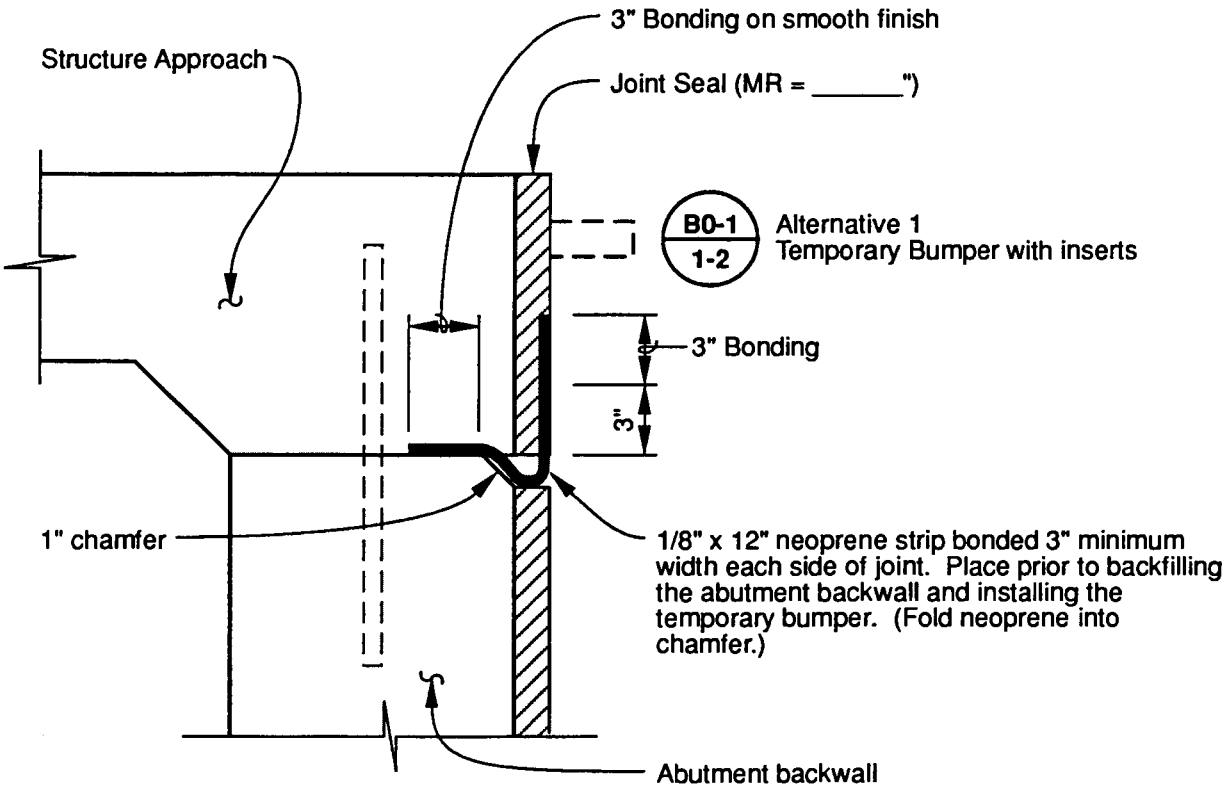

JOINT PROTECTION DETAIL

NOTE:

1. Do not use waterstop (B0-3 / 3-6) with this detail.
2. Estimate *12" Neoprene Strip* in linear feet.

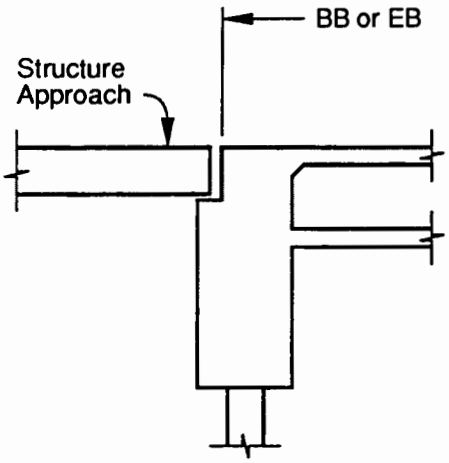

WITH STRUCTURE APPROACH

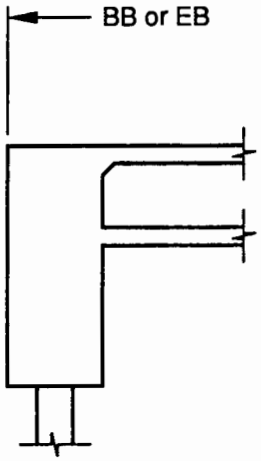

WITHOUT STRUCTURE APPROACH

DIAPHRAGM ABUTMENT

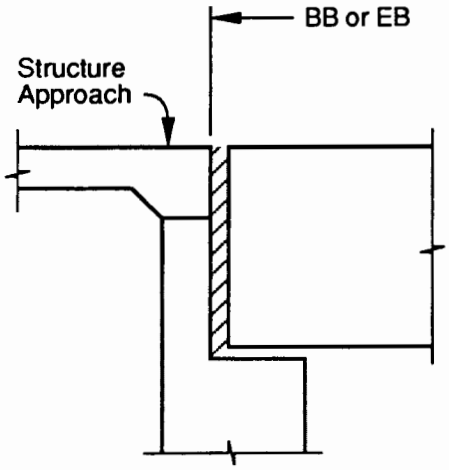

WITH STRUCTURE APPROACH

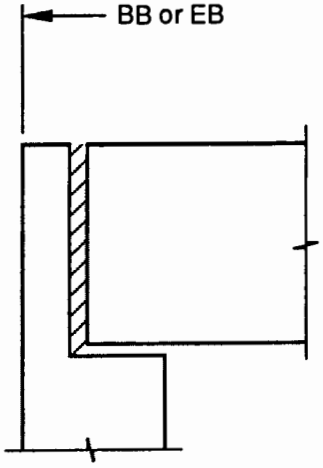

WITHOUT STRUCTURE APPROACH

SEAT ABUTMENT

BB AND EB LOCATIONS

BB = Beginning of Bridge
EB = End of Bridge

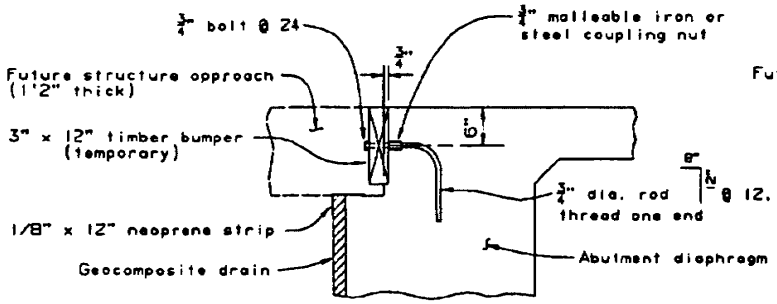

END DIAPHAGM ABUTMENT

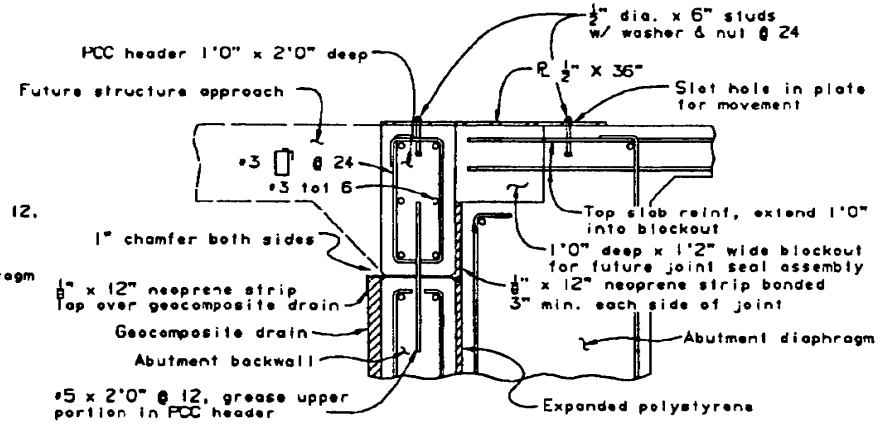

SEAT TYPE ABUTMENT - MR>2 1/2"

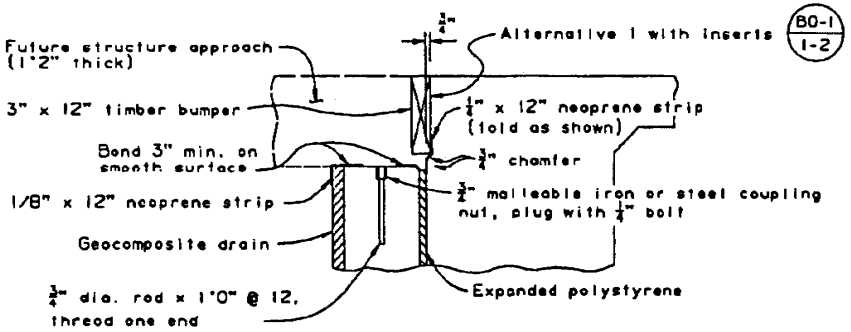

SEAT TYPE ABUTMENT - MR≤2"

ABUTMENT STRUCTURE APPROACH DETAILS
(FUTURE CONSTRUCTION)

CANTILEVERED WINGWALLS
Minimum Soil Cover

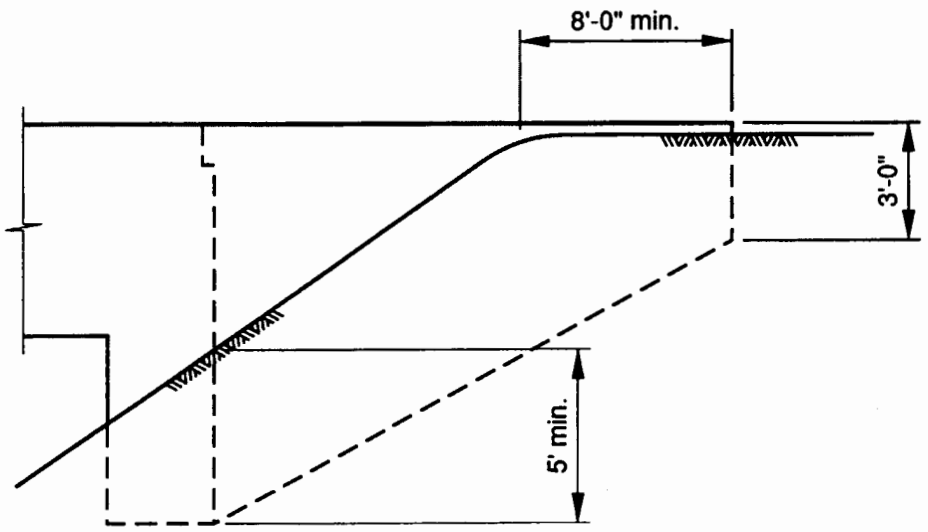

ELEVATION

RETAINING WALL WINGWALL

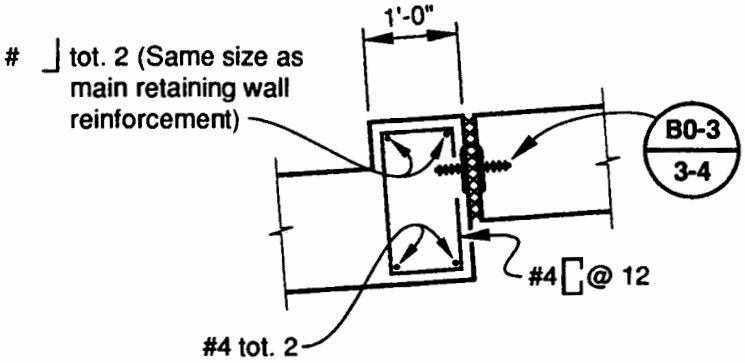

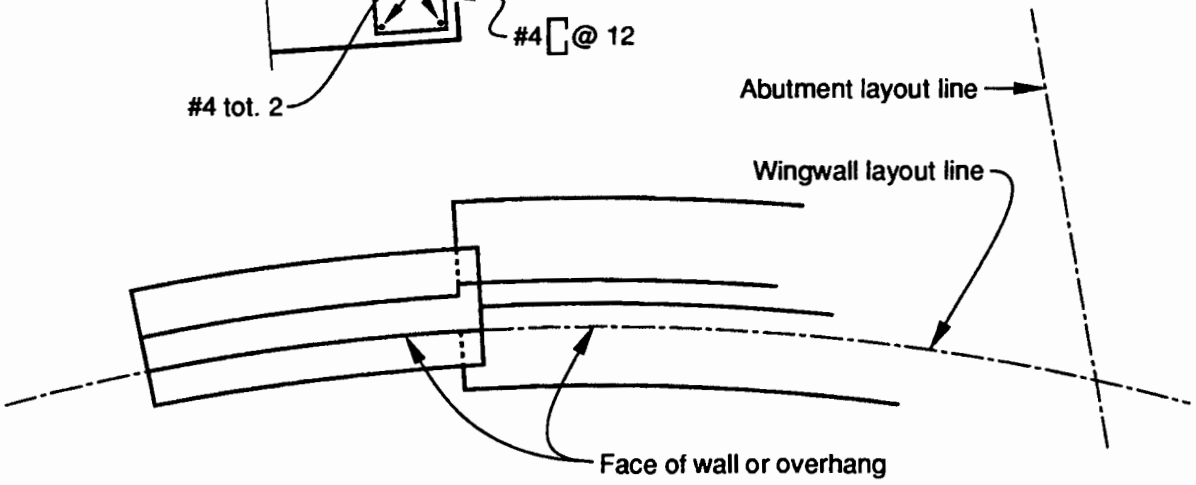

WALL OFFSET

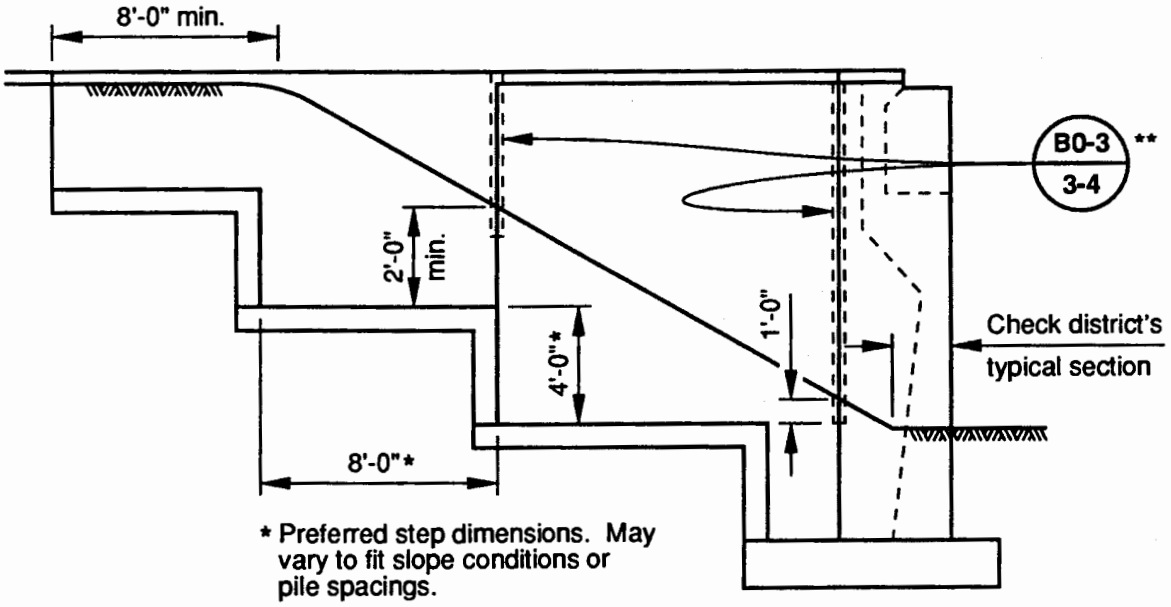

WINGWALL ELEVATION

**Extend waterstop 6" into concrete barrier.

ABUTMENT WINGWALL CORNERS

Tension reinforcement *should not* be bent around a re-entrant corner. The small amount of concrete cover is not sufficient to keep the reinforcing from straightening.

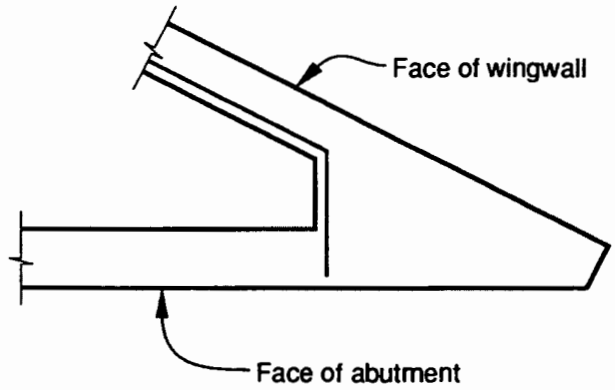

– Incorrect –

Reinforcement in each face *should* be straight and extend the required development length after it crosses the bar from the other direction. Standard practice for detailing reinforcement in *all* re-entrant corners and angle changes in members is shown below.

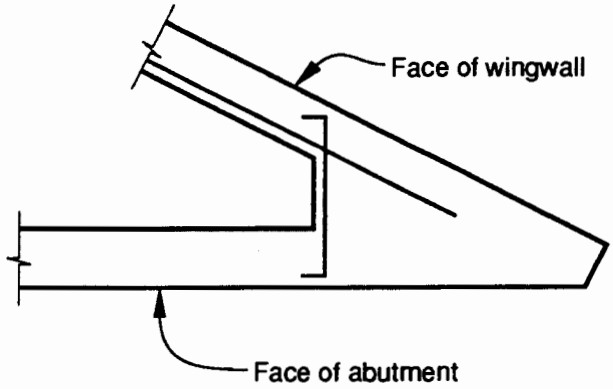

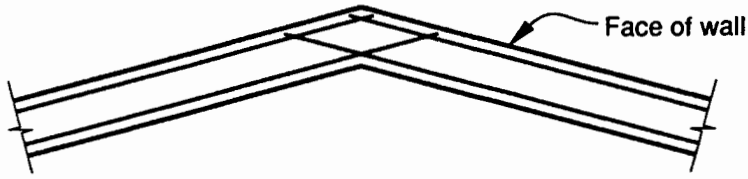

SIDEWALK SUPPORT BRACKET

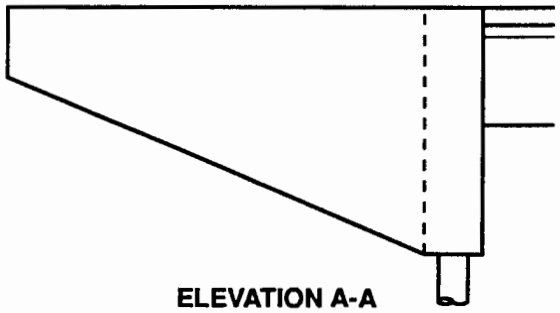

ELEVATION A-A

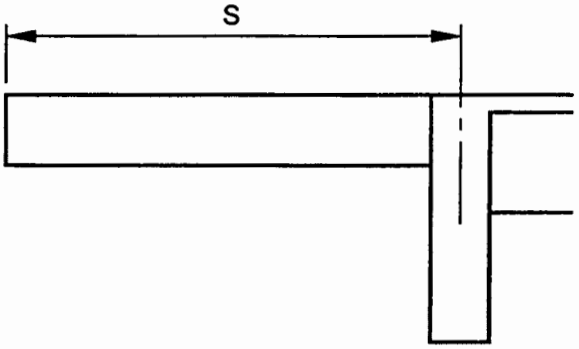

ELEVATION B-B

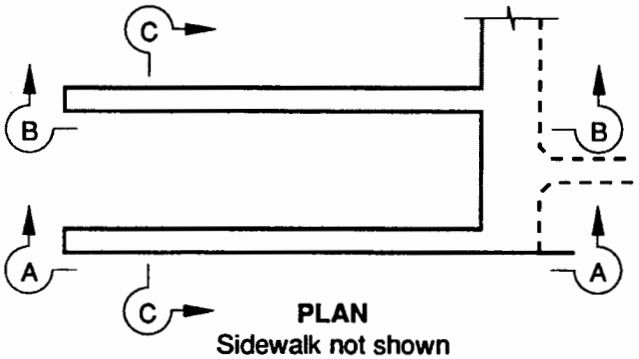

PLAN
Sidewalk not shown

S	D Bars	E Bars
12'	Bundle 4 #9	2 #4
14'	Bundle 4 #10	2 #4
16'	Bundle 2 #10, 2 #11	2 #8
18'	Bundle 4 #11	2 #11

Length of "D" bars = S + 6' or hook into abutment.

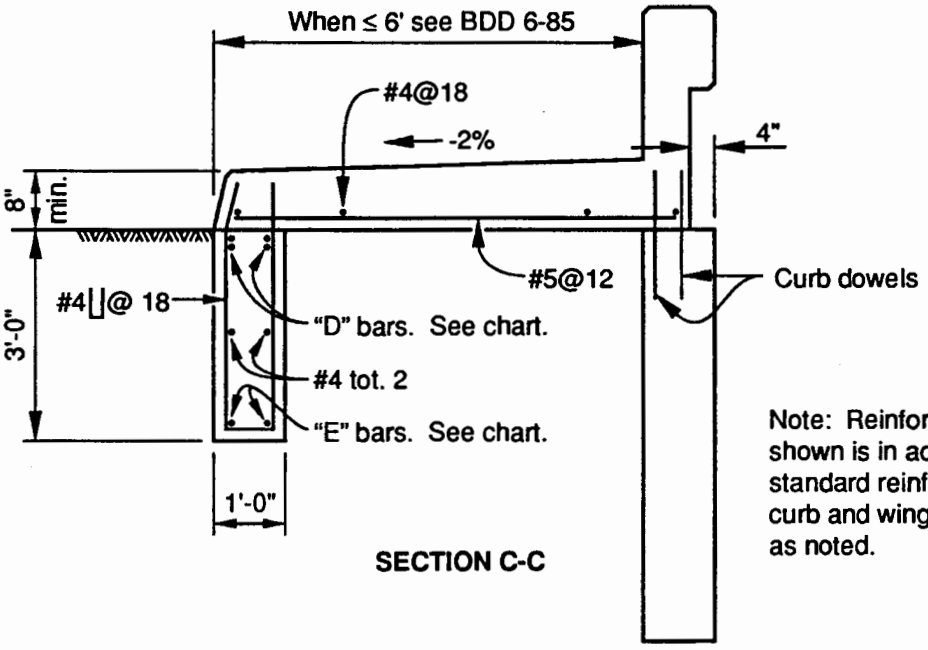

SECTION C-C

Note: Reinforcement shown is in addition to standard reinforcement in curb and wingwall except as noted.

TYPES 26 & 29

SIDEWALK ON WINGWALL

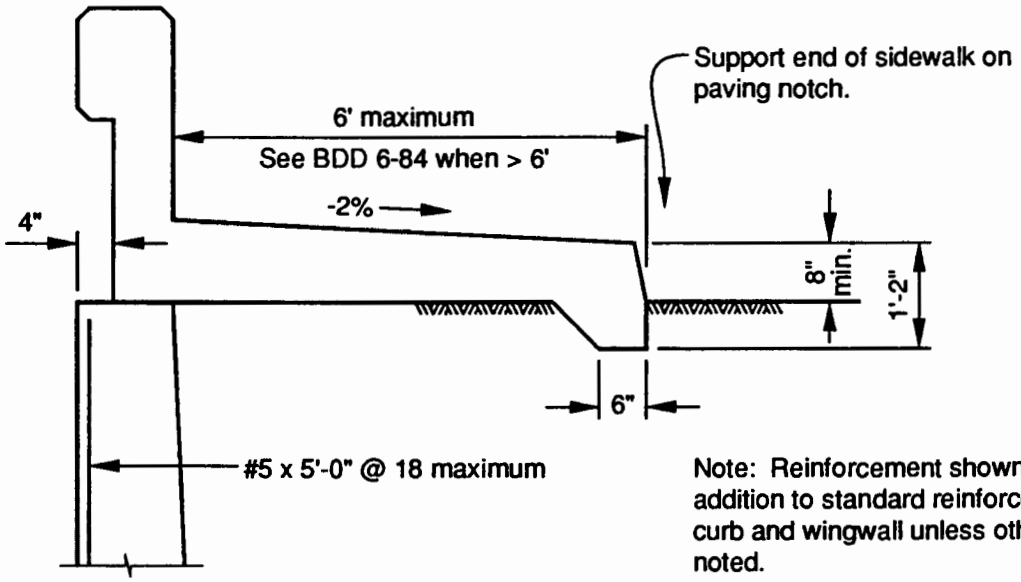

Note: Reinforcement shown is in addition to standard reinforcement in curb and wingwall unless otherwise noted.

TYPES 26 & 29

CONCRETE BARRIER TYPE 25 ON WALLS

When Type 25 is to be placed on wingwalls or retaining walls, the wall must be detailed to alert the contractor of the additional work to be performed. Part of this information is on the Concrete Barrier Type 25 standard. Details below illustrate the minimum additional detail required.

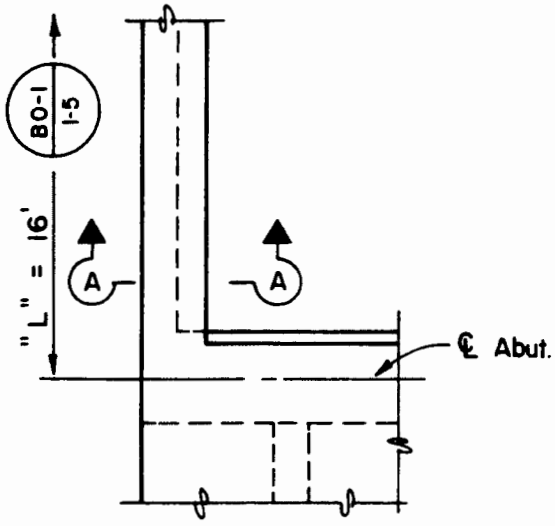

PART PLAN

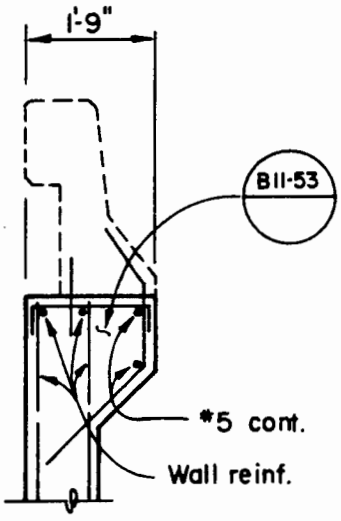

SECTION A-A

DETAILING EXAMPLE

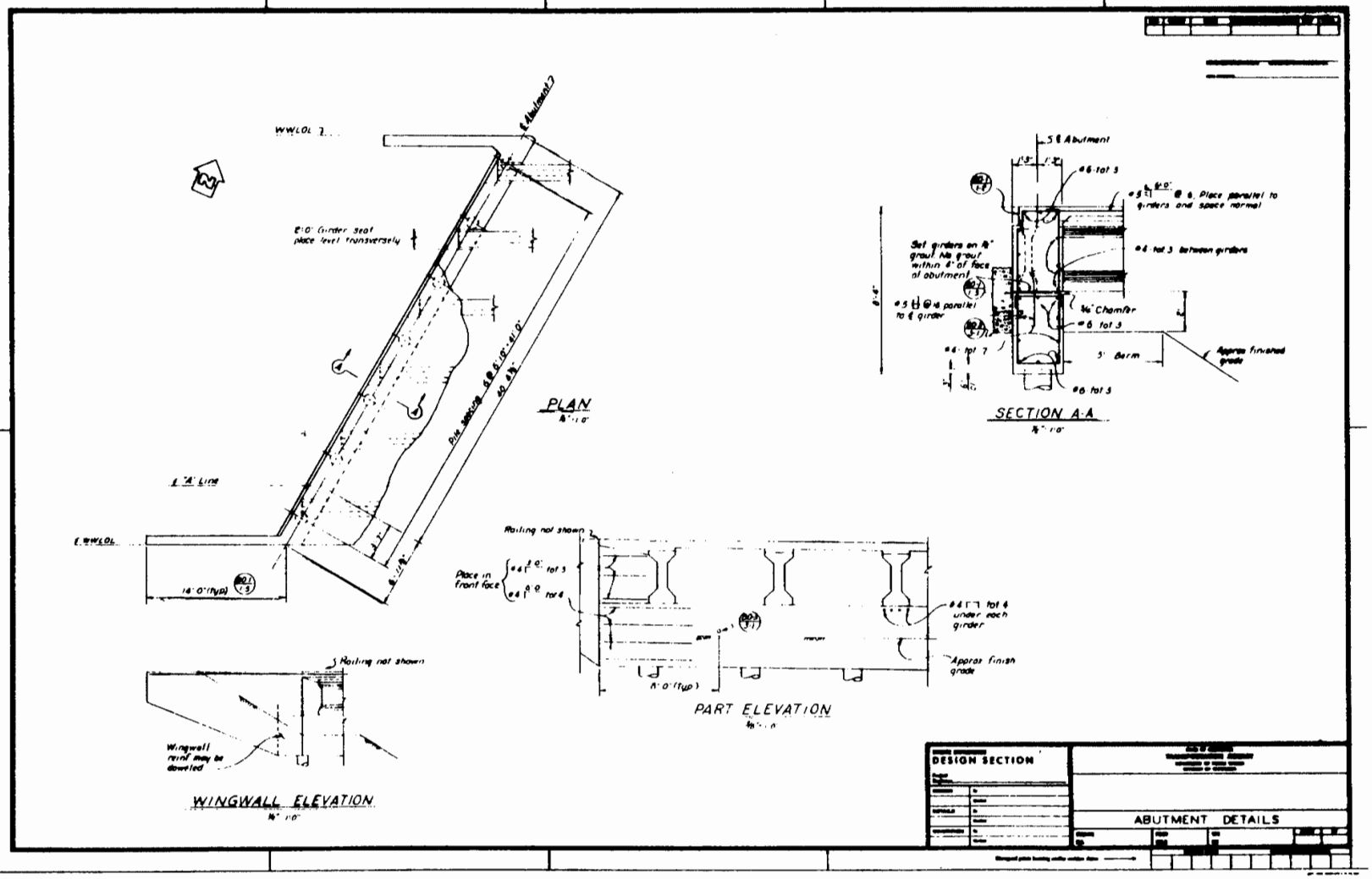

DETAILS SHOWN ARE FOR EXAMPLE ONLY
NOT TO BE USED FOR DESIGN PURPOSES

DETAILING EXAMPLE

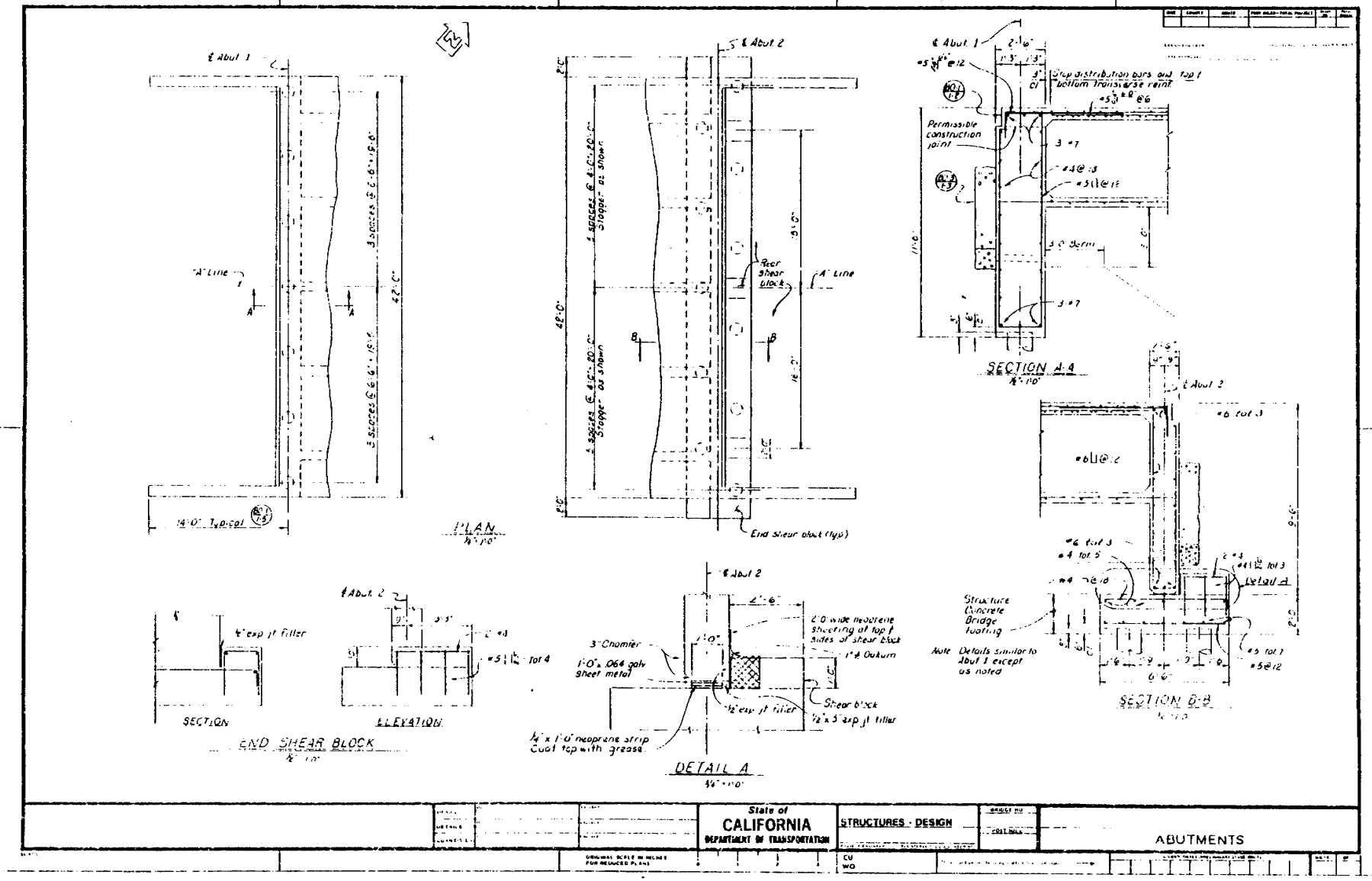

DETAILS SHOWN ARE FOR EXAMPLE ONLY
NOT TO BE USED FOR DESIGN PURPOSES

DETAILING EXAMPLE

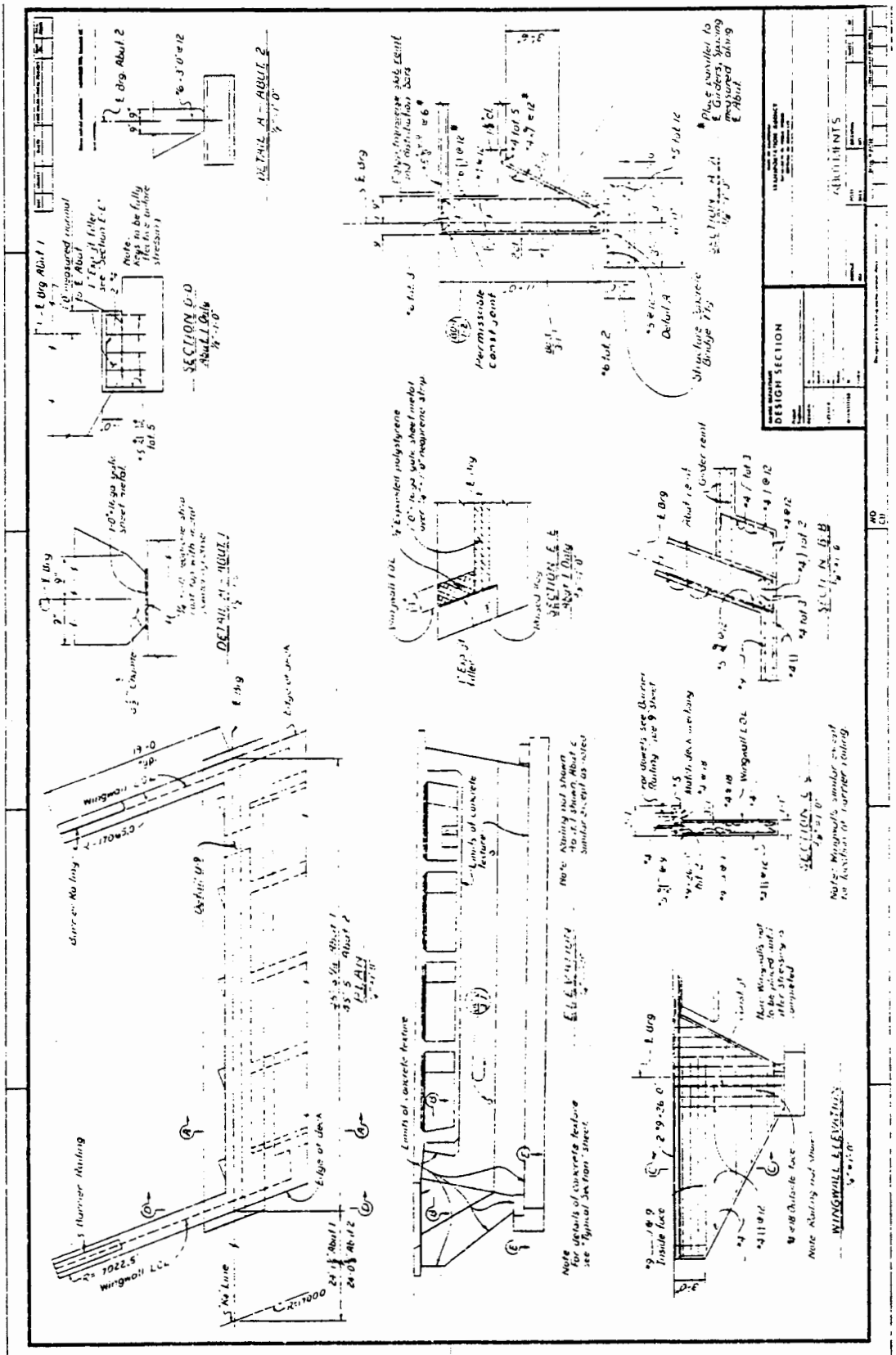

DETAILS SHOWN ARE FOR EXAMPLE ONLY
NOT TO BE USED FOR DESIGN PURPOSES

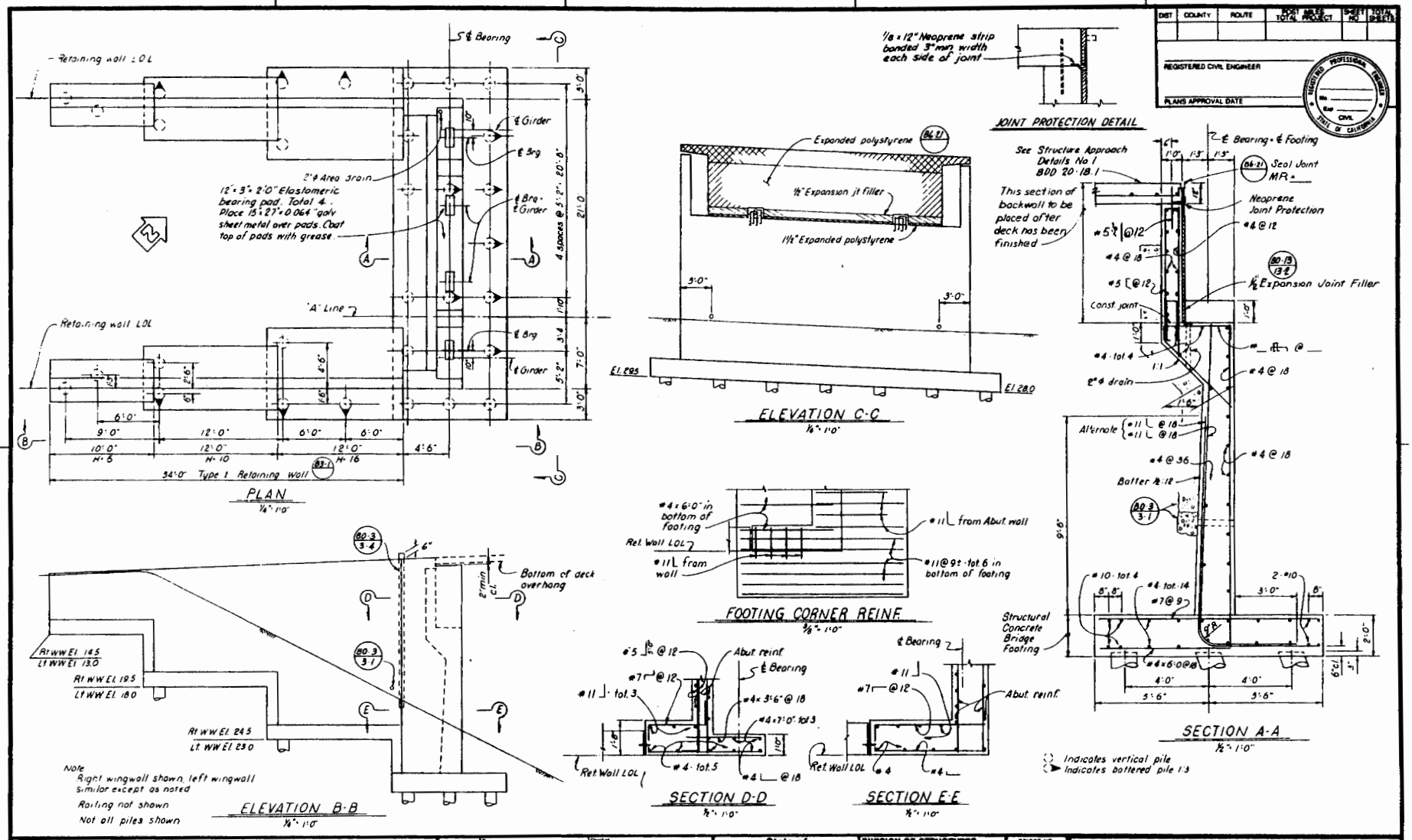

DIST	COUNTY	ROUTE	POST MILES TOTAL PROJECT	SHEET NO	TOTAL SHEETS

REGISTERED CIVIL ENGINEER

PLANS APPROVAL DATE

REGISTERED PROFESSIONAL ENGINEER — CIVIL — STATE OF CALIFORNIA

DESIGN	By	Checked
DETAILS	By	Checked
QUANTITIES	By	Checked

State of CALIFORNIA DEPARTMENT OF TRANSPORTATION

DIVISION OF STRUCTURES STRUCTURE DESIGN

BRIDGE NO. POST MILE

PROJECT ENGINEER REGISTERED CIVIL ENGINEER

ORIGINAL SCALE IN INCHES FOR REDUCED PLANS 0 1 2 3

CU EA

Photograph prior bearing replace reference date

REVISION DATES (PRELIMINARY STAGE ONLY)

SHEET OF

DETAILING EXAMPLE

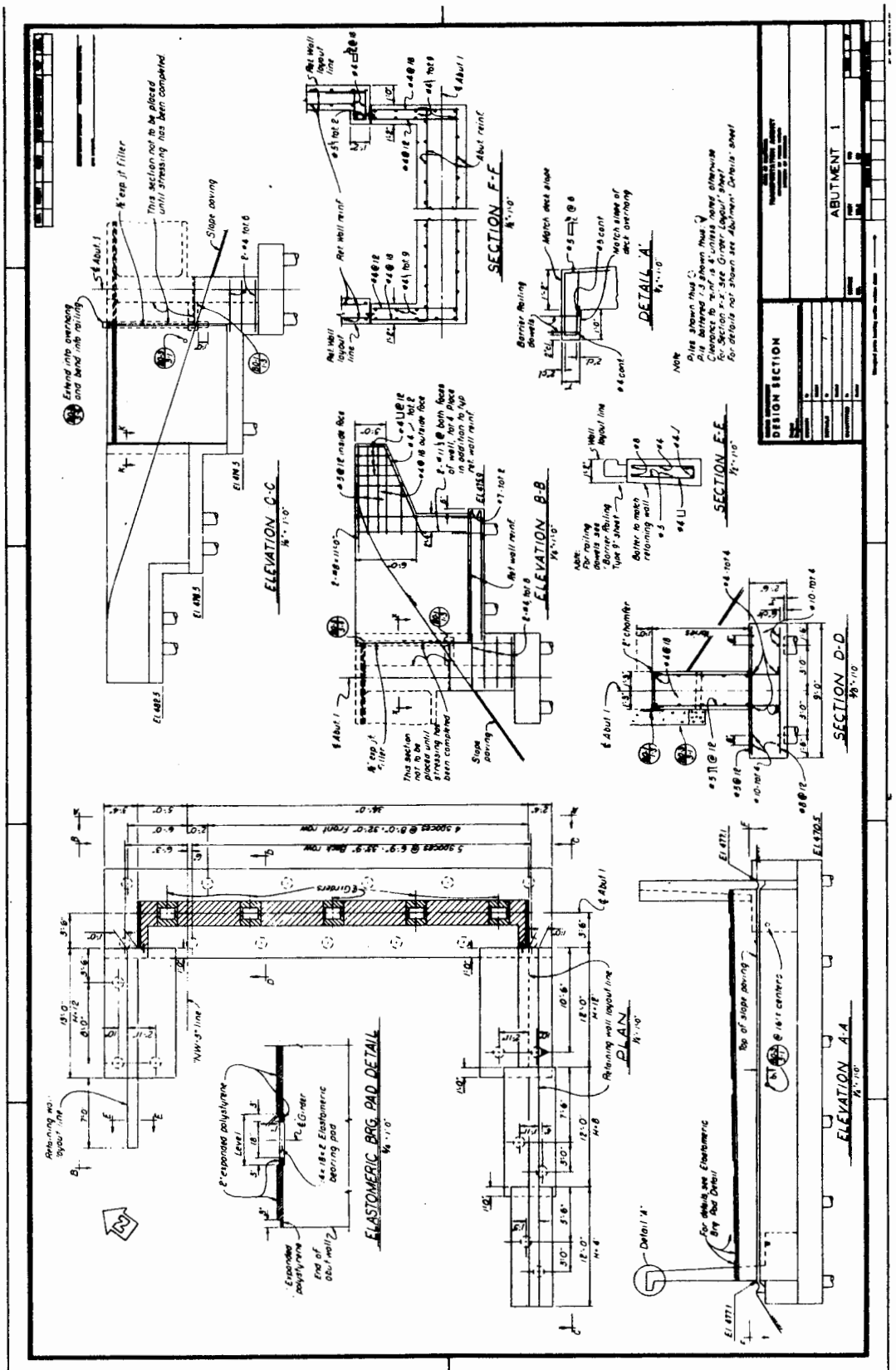

DETAILS SHOWN ARE FOR EXAMPLE ONLY NOT TO BE USED FOR DESIGN PURPOSES

DETAILING EXAMPLE

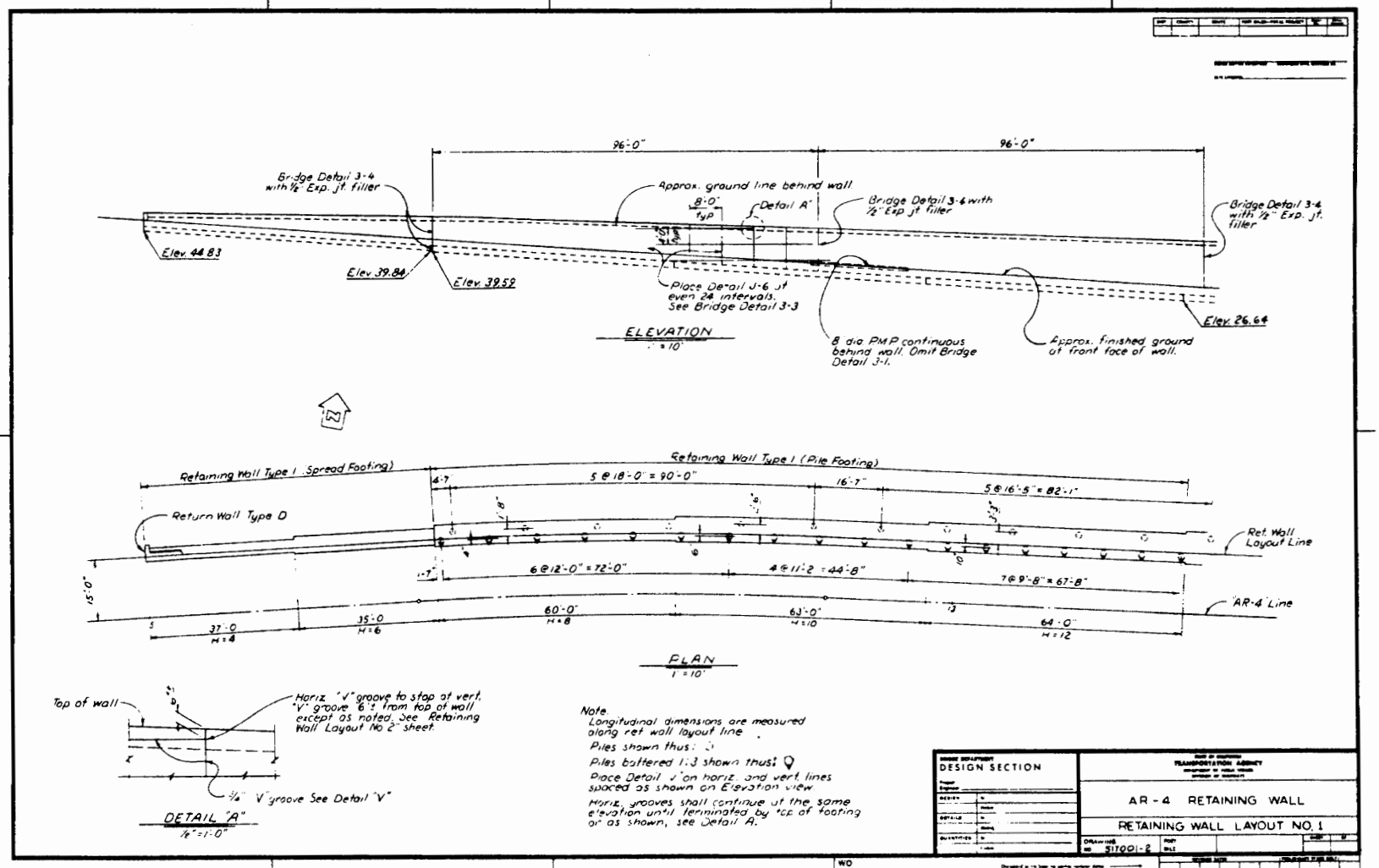

DETAILS SHOWN ARE FOR EXAMPLE ONLY
NOT TO BE USED FOR DESIGN PURPOSES

DETAILING EXAMPLE

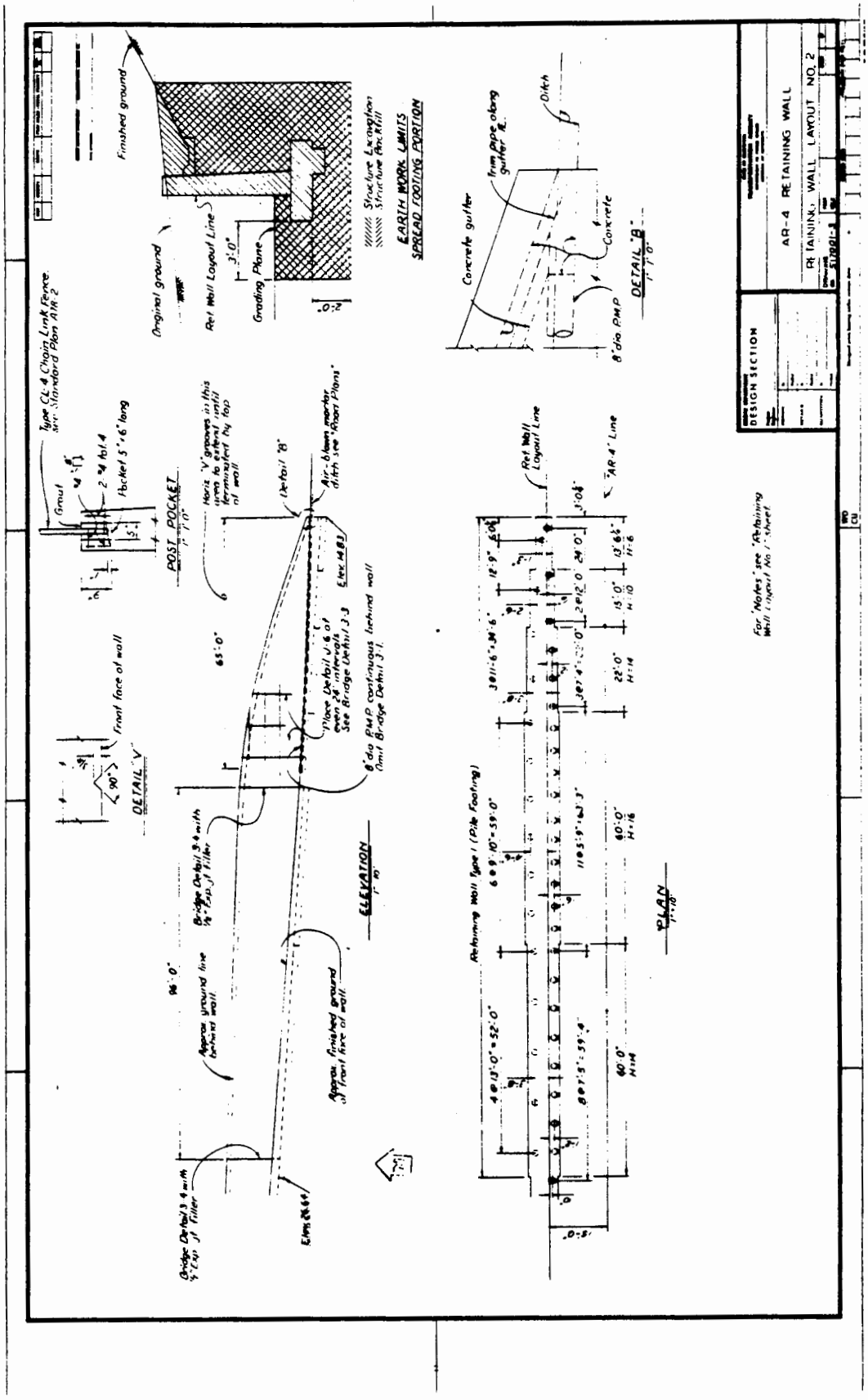

DETAILS SHOWN ARE FOR EXAMPLE ONLY
NOT TO BE USED FOR DESIGN PURPOSES