ANSI/AWWA C651-05
(Revision of ANSI/AWWA C651-99)

American Water Works Association

The Authoritative Resource on Safe Water℠

AWWA Standard

Disinfecting Water Mains

ANSI American National Standards Institute

Effective date: June 1, 2005.
First edition approved by AWWA Board of Directors Sept. 30, 1947.
This edition approved Jan. 16, 2005.
Approved by American National Standards Institute Mar. 9, 2005.

6666 West Quincy Avenue
Denver, CO 80235-3098
T 800.926.7337
www.awwa.org

Advocacy
Communications
Conferences
Education and Training
► ***Science and Technology***
Sections

AWWA Standard

This document is an American Water Works Association (AWWA) standard. It is not a specification. AWWA standards describe minimum requirements and do not contain all of the engineering and administrative information normally contained in specifications. The AWWA standards usually contain options that must be evaluated by the user of the standard. Until each optional feature is specified by the user, the product or service is not fully defined. AWWA publication of a standard does not constitute endorsement of any product or product type, nor does AWWA test, certify, or approve any product. The use of AWWA standards is entirely voluntary. AWWA standards are intended to represent a consensus of the water supply industry that the product described will provide satisfactory service. When AWWA revises or withdraws this standard, an official notice of action will be placed on the first page of the classified advertising section of *Journal AWWA*. The action becomes effective on the first day of the month following the month of *Journal AWWA* publication of the official notice.

American National Standard

An American National Standard implies a consensus of those substantially concerned with its scope and provisions. An American National Standard is intended as a guide to aid the manufacturer, the consumer, and the general public. The existence of an American National Standard does not in any respect preclude anyone, whether that person has approved the standard or not, from manufacturing, marketing, purchasing, or using products, processes, or procedures not conforming to the standard. American National Standards are subject to periodic review, and users are cautioned to obtain the latest editions. Producers of goods made in conformity with an American National Standard are encouraged to state on their own responsibility in advertising and promotional materials or on tags or labels that the goods are produced in conformity with particular American National Standards.

CAUTION NOTICE: The American National Standards Institute (ANSI) approval date on the front cover of this standard indicates completion of the ANSI approval process. This American National Standard may be revised or withdrawn at any time. ANSI procedures require that action be taken to reaffirm, revise, or withdraw this standard no later than five years from the date of publication. Purchasers of American National Standards may receive current information on all standards by calling or writing the American National Standards Institute, 25 West 43rd Street, Fourth Floor, New York, NY 10036; (212) 642-4900.

Science and Technology

AWWA unites the entire water community by developing and distributing authoritative scientific and technological knowledge. Through its members, AWWA develops industry standards for products and processes that advance public health and safety. AWWA also provides quality improvement programs for water and wastewater utilities.

All rights reserved. No part of this publication may be reproduced or transmitted in any form or by any means, electronic or mechanical, including photocopy, recording, or any information or retrieval system, except in the form of brief excerpts or quotations for review purposes, without the written permission of the publisher.

Copyright © 2005 by American Water Works Association
Printed in USA

Committee Personnel

The AWWA Standards Committee on Disinfection of Facilities, which reviewed and approved this standard, had the following personnel at the time of approval:

Marc S. Solomon, *Chair*

General Interest Members

K.C. Choquette, Des Moines, Iowa	(AWWA)
C.B. Hagar, Carollo Engineers, Phoenix, Ariz.	(AWWA)
Terrence Lambert, Florida Department of Environmental Protection, Orlando, Fla.	(AWWA)
T.J. McCandless,* Standards Engineer Liaison, AWWA, Denver, Colo.	(AWWA)
M.S. Solomon, Winzler & Kelly Consulting Engineers, Santa Rosa, Calif.	(AWWA)
T.W. Walker, New York State Department of Health, Victor, N.Y.	(AWWA)
M.L. Wentink, Nebraska Health and Human Services Drinking Water Program, North Platte, Neb.	(AWWA)

Producer Members

W.B. Huebner, Mine Hill, N.J.	(AWWA)
M.L. Johnsen, Johnsen Corrosion Engineering, Lincoln, Neb.	(AWWA)

User Members

L.A. Hensley, GDS Associates Inc., Marietta, Ga.	(AWWA)
R.C. Lorenz, Westerville Water Plant, Westerville, Ohio	(AWWA)
T.W.D. MacDonald, Cambridge Water Department, Cambridge, Mass.	(NEWWA)
P.M. Marchand, Pawtucket Water Supply Board, Pawtucket, RI	(NEWWA)
E.D. Schwartz, Plainsboro, N.J.	(AWWA)
J.L. Stapf, Wyoming, Mich.	(AWWA)

*Liaison, nonvoting

Contents

All AWWA standards follow the general format indicated subsequently. Some variations from this format may be found in a particular standard.

SEC. PAGE

Foreword

I Introduction vii
I.A Background vii
I.B History vii
I.C Acceptance vii
II Special Issues ix
II.A Information on Application of This Standard ix
III Use of This Standard xi
III.A Purchaser Options and Alternatives xi
III.B Modification to Standard xi
IV Major Revisions xii
V Comments xii

Standard

1 General
1.1 Scope 1
1.2 Purpose 1
1.3 Application 1

2 References 2

3 Definitions 2

4 Requirements
4.1 Forms of Chlorine for Disinfection 2
4.2 Basic Disinfection Procedure 3
4.3 Preventive and Corrective Measures During Construction 4
4.4 Methods of Chlorination 6
4.5 Final Flushing 13
4.6 Final Connections to Existing Mains (Optional) 13
4.7 Disinfection Procedures When Cutting Into or Repairing Existing Mains 14
4.8 Special Procedure for Caulked Tapping Sleeves 15

5 Verification
5.1 Bacteriological Tests 15
5.2 Redisinfection 17

6 Delivery 17

Appendixes

A Chlorine Residual Testing
A.1 DPD Drop Dilution Method (for Field Test) 19
A.2 High-Range Chlorine Test Kits 20

B Chlorine Dosages 21

C Disposal of Heavily Chlorinated Water 23

Figures

1 Suggested Temporary Flushing/Testing Connection 6
2 Suggested Combination Blowoff and Sampling Tap 10

SEC. PAGE

Tables

1 Ounces of Calcium Hypochlorite Granules to Be Placed at Beginning of Main and at Each 500-ft Interval 7

2 Number of 5-g Calcium Hypochlorite Tablets Required for Dose of 25 mg/L 8

3 Required Flow and Openings to Flush Pipelines (40 psi [276 kPa] Residual Pressure in Water Main) 9

4 Chlorine Required to Produce 25-mg/L Concentration in 100 ft (30.5 m) of Pipe by Diameter 11

B.1 Amounts of Chemicals Required to Produce Various Chlorine Concentrations in 100,000 gal (378.5 m^3) of Water 21

B.2 Amounts of Chemicals Required to Produce Chlorine Concentration of 200 mg/L in Various Volumes of Water 21

C.1 Amounts of Chemicals Required to Neutralize Various Residual Chlorine Concentrations in 100,000 gal (378.5 m^3) of Water 23

effects of products and drinking water additives from such products, state and local agencies may use various references, including

1. An advisory program formerly administered by USEPA, Office of Drinking Water, discontinued on April 7, 1990.

2. Specific policies of the state or local agency.

3. Two standards developed under the direction of NSF, NSF*/ANSI† 60, Drinking Water Treatment Chemicals—Health Effects, and NSF/ANSI 61, Drinking Water System Components—Health Effects.

4. Other references, including AWWA standards, *Food Chemicals Codex, Water Chemicals Codex*,‡ and other standards considered appropriate by the state or local agency.

Various certification organizations may be involved in certifying products in accordance with NSF/ANSI 60. Individual states or local agencies have authority to accept or accredit certification organizations within their jurisdiction. Accreditation of certification organizations may vary from jurisdiction to jurisdiction.

Annex A, "Toxicology Review and Evaluation Procedures," to NSF/ANSI 60 does not stipulate a maximum allowable level (MAL) of a contaminant for substances not regulated by a USEPA final maximum contaminant level (MCL). The MALs of an unspecified list of "unregulated contaminants" are based on toxicity testing guidelines (noncarcinogens) and risk characterization methodology (carcinogens). Use of Annex A procedures may not always be identical, depending on the certifier.

ANSI/AWWA C651 does not address additives requirements. Thus, users of this standard should consult the appropriate state or local agency having jurisdiction in order to

1. Determine additives requirements including applicable standards.

2. Determine the status of certifications by all parties offering to certify products for contact with, or treatment of, drinking water.

3. Determine current information on product certification.

---

* NSF International, 789 N. Dixboro Rd., Ann Arbor, MI 48105.

† American National Standards Institute, 25 West 43rd Street, Fourth Floor, New York, NY 10036.

‡ Both publications available from National Academy of Sciences, 500 Fifth St., N.W., Washington, DC 20001.

II. Special Issues.

II.A. *Information on Application of This Standard.* Generally, it is easier to disinfect a new main rather than one that has had emergency repairs. The unsanitary conditions created when an existing main bursts or is cut into are likely to be difficult to control. The need to quickly restore water service to the community requires more rapid disinfection procedures than those prescribed for newly constructed mains.

Crews responsible for the repair of mains should be aware of the potential health hazards and should be trained to carefully observe prescribed construction practices and disinfection procedures.

Disinfection requires skills not necessarily mastered by competent construction crews. Some utilities prefer to disinfect water mains using specially trained treatment crews. However, because the effectiveness of disinfection depends, in large measure, on maintaining clean pipes and avoiding major contamination during construction, there are some advantages to having the construction crew retain the responsibility for disinfection. Furthermore, certain functions, such as placing tablets, must be performed by the construction crew. In either case, it is strongly recommended that pipe crews be aware of the need to maintain clean pipes and avoid contamination.

While bacteriological testing in accordance with Sec. 5.1 is used to verify the absence of coliform organisms and is generally accepted as verification that disinfection of the pipeline has been accomplished, following sanitary practices for handling and installation of pipe, valves, fittings, and accessories, coupled with adequate flushing of the line before disinfection, is necessary to ensure that the disinfected pipeline will be ready for connection to the water system. Failure to pass the bacteriological test requires that the flushing or disinfection process be repeated. It must be remembered that the final water quality test is not the primary means for certifying the sanitary condition of a main. The sanitary handling of materials, the practices during construction, and the continual inspection of the work are the primary means for ensuring the sanitary condition of the water main.

Three methods of disinfecting newly constructed water mains are described in this standard: the tablet method, the continuous-feed method, and the slug method. The utility should decide which of these methods is most suitable for a given situation. Factors to consider when choosing a method should include the length and diameter of the main, type of joints present, availability of materials, equipment required for disinfection, training of the personnel who will perform the disinfection, and safety concerns. For example, the continuous-feed or slug methods should be

used with gas chlorination only when properly designed and constructed equipment is available; makeshift equipment is not acceptable when liquid-chlorine cylinders are used.

Thorough consideration should be given to the impact of highly chlorinated water flushed into the waste environment. If there is any question that damage may be caused by chlorinated-waste discharge (to fish life, plant life, physical installations, or other downstream water uses of any type), then an adequate amount of reducing agent should be applied to water being disposed of in order to thoroughly neutralize the chlorine residual remaining in the water.

The tablet method cannot be used unless the main can be kept clean and dry. It cannot be used in large-diameter mains if it is necessary for a worker to enter the main to grout joints or perform inspection, because the tablets may release toxic fumes after exposure to moist air. When using the tablet method, the chlorine concentration is not uniform throughout the main, because the hypochlorite solution is dense and tends to concentrate at the bottom of the pipe. The use of the tablet method precludes preliminary flushing. The tablet method is convenient to use in mains having diameters up to 24 in., and it requires no special equipment.

The continuous-feed method is suitable for general application. Preliminary flushing removes light particulates from the main but not from the pipe-joint spaces. The chlorine concentration is uniform throughout the main.

The slug method is suitable for use in large-diameter mains where the volume of water makes the continuous-feed method impractical and difficult to achieve for short attachments. The slug method results in appreciable savings of chemicals used to disinfect long, large-diameter mains. Also, this method reduces the volume of heavily chlorinated water to be flushed to waste.

The purpose of all three chlorination methods is to disinfect water lines, resulting in an absence of coliforms as confirmed by laboratory analysis. As noted above, the three methods attempt to provide flexibility in responding to specific situations. The tablet and continuous-feed methods both have initial chlorine concentrations of 25 mg/L and a minimum contact time of 24 hr. Because the tablet method cannot be flushed and cleaned prior to disinfection, the required free chlorine residual must be detectable after 24 hr. Because the continuous-feed method can be used to flush particles and *prechlorinate* with calcium hypochlorite granules, a higher free chlorine residual of 10 mg/L is required after 24 hr. To meet the needs of situations requiring reduced contact times, the slug feed method allows only a 3-hr contact time, but

requires a 100-mg/L initial chlorine dosage. While the contact time of each method may not be identical, the end result, absence of coliforms, is the same for all three methods.

III. Use of This Standard. It is the responsibility of the user of an AWWA Standard to determine that the products described in that standard are suitable for use in the particular application being considered.

III.A. *Purchaser Options and Alternatives.* This standard is written as though the disinfection work will be performed by the purchaser's personnel. Where the work is to be done for a separate contract or as part of a contract for installing mains,* appropriate provisions should be included in the purchase documents to ensure that the constructor is specifically instructed as to their responsibilities. The following items should be provided by the purchaser:

1. Standard used—that is, ANSI/AWWA C651, Standard for Disinfection of Water Mains.

2. Approval requirements before use.

3. Those procedures included in the standard, which are designated as optional, that are to be included in the purchase documents.

4. Form of chlorine to be used (Sec. 4.1.1, 4.1.2, and 4.1.3).

5. Method of chlorination (Sec. 4.4.2, 4.4.3, and 4.4.4).

6. Flushing locations, rates of flushing, and locations of drainage facilities (Sec. 4.4.3.2, 4.5.1, and 4.5.2).

7. Responsibility for tapping existing mains and connections to new mains (Sec. 4.4.3.3[1], 4.4.3.3[2], and 4.6).

8. The number and frequency of samples for bacteriological tests (Sec. 5.1.1, 5.1.2, 5.1.4, and 5.2).

9. Method of taking samples (Sec. 5.1.3).

10. Whether compliance with NSF/ANSI 61, Drinking Water System Components—Health Effects is required, in addition to the Safe Drinking Water Act.

11. Details of other federal, state, local, and provisional requirements.

III.B. *Modification to Standard.* Any modification to the provisions, definitions, or terminology in this standard must be provided by the purchaser.

---

*Refer to other AWWA standards and manuals for design criteria and installation procedures for various pipe materials.

IV. Major Revisions. Major revisions made to the standard in this edition include the following:

1. Under Sec. 5.1.4 sample results, Heterotrophic Plate Counts greater than 500 colony forming units require additional flushing.
2. Table 1 has been corrected.
3. Ascorbic Acid was added in Appendix C as a neutralizing agent.

V. Comments. If you have any comments or questions about this standard, please call the AWWA Volunteer and Technical Support Group at (303) 794-7711, FAX (303) 795-7603, or write to the group at 6666 West Quincy Avenue, Denver, CO 80235-3098, or e-mail at standards@awwa.org.

American Water Works Association

ANSI/AWWA C651-05
(Revision of ANSI/AWWA C651-99)

AWWA Standard

Disinfecting Water Mains

SECTION 1: GENERAL

Sec. 1.1 Scope

This standard describes essential procedures for the disinfection of new and repaired potable water mains. New water mains shall be disinfected before they are placed in service. Water mains taken out of service for inspection, repair, or other activities that might lead to contamination of water shall be disinfected before they are returned to service.

Sec. 1.2 Purpose

The purpose of this standard is to define the minimum requirements for the disinfection of water mains, including the preparation of water mains, application of chlorine, and sampling and testing for the presence of coliform bacteria.

Sec. 1.3 Application

This standard can be referenced in the purchase documents for the disinfection of water mains and can be used as a guide for the preparation of water mains, application of chlorine, and sampling and testing for the presence of coliform bacteria. The stipulations of this standard apply when this document has been referenced and only to the disinfection of water mains.

SECTION 2: REFERENCES

This standard references the following documents. In their latest editions, they form a part of this standard to the extent required within the standard. In any case of conflict, the requirements of this standard shall prevail.

ANSI*/AWWA B300—Hypochlorites.

ANSI/AWWA B301—Liquid Chlorine.

AWWA Manual M12, *Simplified Procedures for Water Examination.* AWWA: Denver, Colo.

Standard Methods for the Examination of Water and Wastewater. APHA,† AWWA, and WEF.‡ Washington, D.C.

SECTION 3: DEFINITIONS

1. *Constructor:* The party that furnishes the work and materials for placement or installation.

2. *Manufacturer:* The party that manufactures, fabricates, or produces materials or products.

3. *Purchaser:* The person, company, or organization that purchases any materials or work to be performed.

SECTION 4: REQUIREMENTS

Sec. 4.1 Forms of Chlorine for Disinfection

The forms of chlorine that may be used in the disinfection operations are liquid chlorine, sodium hypochlorite solution, and calcium hypochlorite granules or tablets.

4.1.1 *Liquid chlorine.* Liquid chlorine conforming to ANSI/AWWA B301 contains 100 percent available chlorine and is packaged in steel containers usually of 100-lb, 150-lb, or 1-ton (45.4-kg, 68.0-kg, or 907.2-kg) net chlorine weight. Liquid

*American National Standards Institute, 25 West 43rd Street, Fourth Floor, New York, NY 10036.

†American Public Health Association, 800 I St., N.W., Washington, DC 20001.

‡Water Environment Federation, 601 Wythe St., Alexandria, VA 22314.

chlorine shall be used only (1) in combination with appropriate gas-flow chlorinators and ejectors to provide a controlled high-concentration solution feed to the water to be chlorinated; (2) under the direct supervision of someone familiar with the biological, chemical, and physical properties of liquid chlorine and who is trained and equipped to handle any emergency that may arise; and (3) when appropriate safety practices are observed to protect working personnel and the public.

4.1.2 *Sodium hypochlorite.* Sodium hypochlorite conforming to ANSI/AWWA B300 is available in liquid form in glass, rubber-lined, or plastic containers typically ranging in size from 1 qt (0.95 L) to 5 gal (18.92 L). Containers of 30 gal (113.6 L) or larger may be available in some areas. Sodium hypochlorite contains approximately 5 percent to 15 percent available chlorine, and the storage conditions and time must be controlled to minimize its deterioration. (Available chlorine is expressed as a percent of weight when the concentration is 5 percent or less, and usually as a percent of volume for higher concentrations. Percent × 10 = grams of available chlorine per liter of hypochlorite.)

4.1.3 *Calcium hypochlorite.* Calcium hypochlorite conforming to ANSI/AWWA B300 is available in granular form or in 5-g tablets, and must contain approximately 65 percent available chlorine by weight. The material should be stored in a cool, dry, and dark environment to minimize its deterioration.

CAUTION: Tablets dissolve in approximately 7 hr and must be given adequate contact time. Do not use calcium hypochlorite intended for swimming pool disinfection, as this material has been sequestered and is extremely difficult to eliminate from the pipe after the desired contact time has been achieved.

Sec. 4.2 Basic Disinfection Procedure

The basic disinfection procedure consists of

1. Inspecting materials to be used to ensure their integrity.
2. Preventing contaminating materials from entering the water main during storage, construction, or repair and noting potential contamination at the construction site.
3. Removing, by flushing or other means, those materials that may have entered the water main.
4. Chlorinating any residual contamination that may remain, and flushing the chlorinated water from the main.

5. Protecting the existing distribution system from backflow caused by hydrostatic pressure test and disinfection procedures.

6. Documenting that an adequate level of chlorine contacted each pipe to provide disinfection.

7. Determining the bacteriological quality by laboratory test after disinfection.

8. Final connection of the approved new water main to the active distribution system.

Sec. 4.3 Preventive and Corrective Measures During Construction

4.3.1 *General.* Heavy particulates generally contain bacteria and prevent even very high chlorine concentrations from contacting and killing these organisms. Therefore, the procedures of this section must be observed to assure that a water main and its appurtenances have been thoroughly cleaned for the final disinfection by chlorination. Also, any connection of a new water main to the active distribution system prior to the receipt of satisfactory bacteriological samples may constitute a cross-connection. Therefore, the new main must be isolated until bacteriological tests described in Sec. 5 of this standard are satisfactorily completed.

4.3.2 *Keeping pipe clean and dry.* The interiors of pipes, fittings, and valves shall be protected from contamination.

4.3.2.1 Openings. Openings in the pipeline shall be closed with watertight plugs when pipe laying is stopped at the close of the day's work or for other reasons, such as rest breaks or meal periods. Rodent-proof plugs may be used when watertight plugs are not practicable and when thorough cleaning will be performed by flushing or other means.

4.3.2.2 Stringing pipe. Pipe delivered for construction shall be strung to minimize the entrance of foreign material.

4.3.2.3 Delays. Delay in placement of delivered pipe invites contamination. The more closely the rate of delivery is correlated to the rate of pipe laying, the lower the risk of contamination.

4.3.3 *Joints.* Joints of pipe in the trench shall be completed before work is stopped. If water accumulates in the trench, the plugs shall remain in place until the trench is free of standing water and mud that may enter the pipe.

4.3.4 *Packing materials.* Yarning or packing material shall consist of molded or tubular rubber rings, rope of treated paper, or other approved materials. Materials such as jute or hemp shall not be used. Packing material shall be handled in a manner

that avoids contamination. If asbestos rope is used, asbestos shall be prevented from entering into the water-carrying portion of the pipe.

4.3.5 *Sealing materials.* No contaminated material or any material capable of supporting growth of microorganisms shall be used for sealing joints. Sealing material or gaskets shall be handled in a manner that avoids contamination. The lubricant used in the installation of sealing gaskets shall be suitable for use in potable water and shall not contribute odors. It shall be delivered to the job in closed containers and shall be kept clean and applied with dedicated, clean applicator brushes.

4.3.6 *Cleaning and swabbing.* If dirt enters the pipe, it shall be removed and the interior pipe surface swabbed with a 1 to 5 percent hypochlorite disinfecting solution. If, in the opinion of the purchaser, the dirt remaining in the pipe will not be removed using the flushing operation, then the interior of the pipe shall be cleaned using mechanical means, such as a hydraulically propelled foam pig (or other suitable device acceptable to the purchaser) in conjunction with the application of a 1 percent hypochlorite disinfecting solution. The cleaning method used shall not force mud or debris into the interior pipe-joint spaces and shall be acceptable to the purchaser.

4.3.7 *Wet-trench construction.* If it is not possible to keep the pipe and fittings dry during installation, the water that may enter the pipe-joint spaces shall contain an available chlorine concentration of approximately 25 mg/L. This may be accomplished by adding calcium hypochlorite granules or tablets to each length of pipe before it is lowered into a wet trench or by treating the trench water with hypochlorite tablets.

4.3.8 *Flooding by storm or accident during construction.* If the main is flooded during construction, it shall be cleared of the floodwater by draining and flushing with potable water until the main is clean. The section exposed to the floodwater shall then be filled with a chlorinated potable water that, at the end of a 24-hr holding period, will have a free chlorine residual of not less than 25 mg/L. The chlorinated water may then be drained or flushed from the main. After construction is completed, the main shall be disinfected using the continuous-feed or slug method.

4.3.9 *Backflow protection (optional).** As an optional procedure (if required by the purchaser), the new water main shall be kept isolated from the active distribution system using a physical separation (see Figure 1) until satisfactory bacteriological testing has been completed and the disinfectant water flushed out.

*Optional Sec. 4.3.9 is not included as part of the standard unless required by the purchaser.

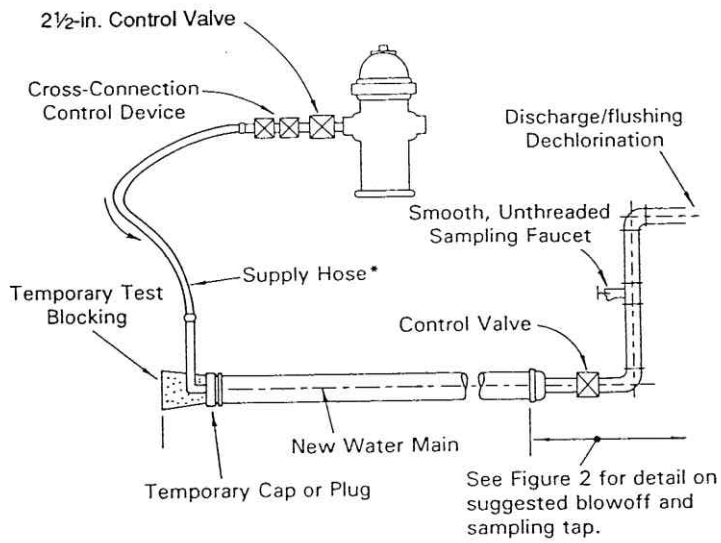

*Clean potable-water hose only. Size and number of taps per Table 3. This hose must be removed during the hydrostatic pressure test.

NOTE: Figure 1 applies to pipes with diameters 4 in. (100 mm) through 12 in. (300 mm). Larger sizes must be handled on a case-by-case basis.

Figure 1 Suggested temporary flushing/testing connection

Water required to fill the new main for hydrostatic pressure testing, disinfection, and flushing shall be supplied through a temporary connection between the distribution system and the new main. The temporary connection shall include an appropriate cross-connection control device consistent with the degree of hazard (a double check valve assembly or a reduced pressure zone assembly) and shall be disconnected (physically separated) from the new main during the hydrostatic pressure test. It will be necessary to reestablish the temporary connection after completion of the hydrostatic pressure test to flush out the disinfectant water prior to final connection of the new main to the distribution system. NOTE: Exposure to high levels of chlorine or high pH can cause severe irritation to customers. Also, the chlorinated water can be high in disinfection by-products.

Sec. 4.4 Methods of Chlorination

4.4.1 *General.* Three methods of chlorination are explained in this section: tablet, continuous feed, and slug. Information in the Foreword is helpful in determining the appropriate method. The tablet method gives an average chlorine dose of approximately 25 mg/L; the continuous-feed method gives a 24-hr chlorine

residual of not less than 10 mg/L; and the slug method gives a 3-hr exposure of not less than 50-mg/L free chlorine.

4.4.1.1 Preflushing of source water. The source of potable water used for disinfection and pressure testing shall be flushed prior to its use to ensure that contaminants or debris are not introduced into the new pipe. Adequate drainage must be provided during flushing. Drainage should take place away from the construction area. During the contact period, it is recommended that the valve isolating the new main from this system (if applicable) be tagged to prevent unintentional release of the elevated chlorine residual water into the system.

4.4.2 *Tablet method.* The tablet method consists of placing calcium hypochlorite granules or tablets in the water main as it is being installed and then filling the main with potable water when installation is completed. This method may be used only if the pipes and appurtenances are kept clean and dry during construction.

4.4.2.1 Placing of calcium hypochlorite granules. During construction, calcium hypochlorite granules shall be placed at the upstream end of the first section of pipe, at the upstream end of each branch main, and at 500-ft intervals. The quantity of granules shall be as shown in Table 1.

WARNING: This procedure must not be used on solvent-welded plastic or on screwed-joint steel pipe because of the danger of fire or explosion from the reaction of the joint compounds with the calcium hypochlorite.

Table 1 Ounces of calcium hypochlorite granules to be placed at beginning of main and at each 500-ft interval

Pipe Diameter *(d)*		Calcium Hypochlorite Granules	
in.	*(mm)*	*oz*	*(g)*
4	100	1.7	48
6	150	3.8	113
8	200	6.7	200
10	250	10.5	300
12	300	15.1	430
14 and larger	(350 and larger)	$D^2 \times 15.1$	$D^2 \times 427.9$

Where D is the inside pipe diameter in feet $D = d/12$

Table 2 Number of 5-g calcium hypochlorite tablets required for dose of 25 mg/L*

Pipe Diameter		Length of Pipe Section, *ft (m)*				
		13 (4.0) or less	18 (5.5)	20 (6.1)	30 (9.1)	40 (12.2)
in.	*(mm)*	Number of 5-g Calcium Hypochlorite Tablets				
4	(100)	1	1	1	1	1
6	(150)	1	1	1	2	2
8	(200)	1	2	2	3	4
10	(250)	2	3	3	4	5
12	(300)	3	4	4	6	7
16	(400)	4	6	7	10	13

*Based on 3.25-g available chlorine per tablet; any portion of tablet rounded to the next higher integer.

4.4.2.2 Placing of calcium hypochlorite tablets. During construction, 5-g calcium hypochlorite tablets shall be placed in each section of pipe. Also, one tablet shall be placed in each hydrant, hydrant branch, and other appurtenance. The number of 5-g tablets required for each pipe section shall be $0.0012\ d^2L$ rounded to the next higher integer, where d is the inside pipe diameter, in inches, and L is the length of the pipe section, in feet. Table 2 shows the number of tablets required for commonly used sizes of pipe. The tablets shall be attached by a food-grade adhesive. There shall be adhesive only on the broadside of the tablet attached to the surface of the pipe. Attach tablets inside and at the top of the main, with approximately equal numbers of tablets at each end of a given pipe length. If the tablets are attached before the pipe section is placed in the trench, their position shall be marked on the section to indicate that the pipe has been installed with the tablets at the top.

4.4.2.3 Filling and contact. When installation has been completed, the main shall be filled with water at a rate to ensure that the water within the main will flow at a velocity no greater than 1 ft/sec (0.3 m/sec). Precautions shall be taken to ensure that air pockets are eliminated. This water shall remain in the pipe for at least 24 hr. If the water temperature is less than 41°F (5°C), the water shall remain in the pipe for at least 48 hr. As an optional procedure, if required by the purchaser, water used to fill the new main shall be supplied through a temporary connection that shall include an appropriate cross-connection control device, consistent with the degree of hazard, for backflow protection of the active distribution system (see Figure 1). A detectable free

chlorine residual should be found at each sampling point after the 24-hr period. The results must be reported.

4.4.3 *Continuous-feed method.* The continuous-feed method consists of placing calcium hypochlorite granules in the main during construction (optional), completely filling the main to remove air pockets, flushing the completed main to remove particulates, and filling the main with potable water. The potable water shall be chlorinated so that after a 24-hr holding period in the main there will be a free chlorine residual of not less than 10 mg/L.

4.4.3.1 Placing of calcium hypochlorite granules. At the option of the purchaser, calcium hypochlorite granules shall be placed in pipe sections as specified in Sec. 4.4.2.1. The purpose of this procedure is to provide a strong chlorine concentration in the first flow of flushing water that flows down the main. In particular, this procedure is recommended when the type of pipe is such that this first flow of water will flow into annular spaces at pipe joints.

4.4.3.2 Preliminary flushing. Before the main is chlorinated, it shall be filled to eliminate air pockets and flushed to remove particulates. The flushing velocity in the main shall not be less than 2.5 ft/sec (0.76 m/sec) unless the purchaser determines that conditions do not permit the required flow to be discharged to waste. Table 3

Table 3 Required flow and openings to flush pipelines (40 psi [276 kPa] residual pressure in water main)*

Pipe Diameter		Flow Required to Produce 2.5 ft/sec (approx.) Velocity in Main		Size of Tap, *in.* (*mm*)			Number of 2½-in. (64-mm) Hydrant Outlets
				1 (25)	1½ (38)	2 (51)	
in.	(*mm*)	*gpm*	(*L/sec*)	Number of Taps on Pipe†			
4	(100)	100	(6.3)	1	—	—	1
6	(150)	200	(12.6)	—	1	—	1
8	(200)	400	(25.2)	—	2	1	1
10	(250)	600	(37.9)	—	3	2	1
12	(300)	900	(56.8)	—	—	2	2
16	(400)	1,600	(100.9)	—	—	4	2

*With a 40-psi (276-kPa) pressure in the main with the hydrant flowing to atmosphere, a 2½-in. (64-mm) hydrant outlet will discharge approximately 1,000 gpm (63.1 L/sec); and a 4½-in. (114-mm) hydrant outlet will discharge approximately 2,500 gpm (160 L/sec).

†Number of taps on pipe based on discharge through 5 ft (1.5 m) of galvanized iron (GI) pipe with one 90° elbow.

shows the rates of flow required to produce a velocity of 2.5 ft/sec (0.76 m/sec) in commonly used sizes of pipe. Note that flushing is no substitute for preventive measures during construction. Certain contaminants, such as caked deposits, resist flushing at any feasible velocity and pigging of the main may be required.

For 24-in. (600-mm) or larger diameter mains, an acceptable alternative to flushing is to broom-sweep the main, carefully removing sweepings prior to chlorinating the main.

4.4.3.3 Procedure for chlorinating the main.

1. Water supplied from a temporary, backflow-protected connection to the existing distribution system or other approved supply source shall flow at a constant, measured rate into the newly installed water main. In the absence of a meter, the rate may be approximated using a Pitot gauge in the discharge, measuring the time to fill a container of known volume, or measuring the trajectory of the discharge and using the formula shown in Figure 2. The main should undergo hydrostatic testing prior to disinfection.

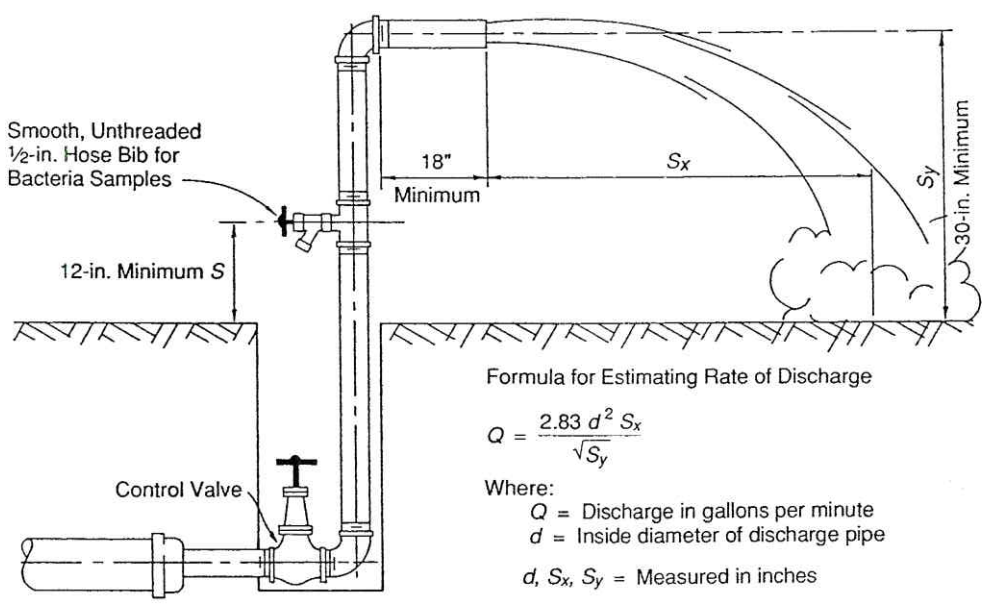

Note: This figure applies to pipes up to and including 8-in. (200-mm) diameter.

Figure 2 Suggested combination blowoff and sampling tap

2. At a point not more than 10 ft (3 m) downstream from the beginning of the new main, water entering the new main shall receive a dose of chlorine fed at a constant rate such that the water will have not less than 25 mg/L free chlorine. To ensure that this concentration is provided, measure the chlorine concentration at regular intervals in accordance with the procedures described in the current edition of *Standard Methods for the Examination of Water and Wastewater* or AWWA Manual M12, or using appropriate chlorine test kits (see Appendix A).

Table 4 gives the amount of chlorine required for each 100 ft (30.5 m) of pipe of various diameters. Solutions of 1 percent chlorine may be prepared with sodium hypochlorite or calcium hypochlorite. The latter solution requires 1 lb (454 g) of calcium hypochlorite in 8 gal (30.3 L) of water.

3. As an optional procedure, if required by the purchaser, water used to fill the new main during the application of chlorine shall be supplied through a temporary connection. This temporary connection shall be installed with an appropriate cross-connection control device, consistent with the degree of hazard for backflow protection of the active distribution system (see Figure 1). Chlorine application shall not cease until the entire main is filled with heavily chlorinated water. The chlorinated water shall be retained in the main for at least 24 hr, during which time valves and hydrants in the treated section shall be operated to ensure disinfection of the appurtenances. At the end of this 24-hr period, the treated water in all portions of the main shall have a residual of not less than 10 mg/L of free chlorine.

Table 4 Chlorine required to produce 25-mg/L concentration in 100 ft (30.5 m) of pipe by diameter

Pipe Diameter		100% Chlorine		1% Chlorine Solution	
in.	*(mm)*	*lb*	*(g)*	*gal*	*(L)*
4	(100)	0.13	(5.9)	0.16	(0.6)
6	(150)	0.30	(13.6)	0.36	(1.4)
8	(200)	0.54	(24.5)	0.65	(2.5)
10	(250)	0.085	(38.6)	1.02	(3.9)
12	(300)	0.120	(54.4)	1.44	(5.4)
16	(400)	0.217	(98.4)	2.60	(9.8)

4. Direct-feed chlorinators, which operate solely from gas pressure in the chlorine cylinder, shall not be used for the application of liquid chlorine. (The danger of using direct-feed chlorinators is that water pressure in the main can exceed gas pressure in the chlorine cylinder. This allows a backflow of water into the cylinder, resulting in severe cylinder corrosion and the escape of chlorine gas.) The preferred equipment for applying liquid chlorine is a solution-feed, vacuum-operated chlorinator and a booster pump. The vacuum-operated chlorinator mixes the chlorine gas in solution water; the booster pump injects the chlorine-gas solution into the main to be disinfected. Hypochlorite solutions may be applied to the water main with a gasoline or electrically powered chemical-feed pump designed for feeding chlorine solutions. Feed lines shall be made of material capable of withstanding the corrosion caused by the concentrated chlorine solutions and the maximum pressures that may be created by the pumps. All connections shall be checked for tightness before the solution is applied to the main.

4.4.4 *Slug method.* The slug method consists of placing calcium hypochlorite granules in the main during construction; completely filling the main to eliminate air pockets; flushing the main to remove particulates; and slowly flowing through the main a slug of water dosed with chlorine to a concentration of 100 mg/L. The slow rate of flow ensures that all parts of the main and its appurtenances will be exposed to the highly chlorinated water for a period of not less than 3 hr.

4.4.4.1 Placing calcium hypochlorite granules. Same as Sec. 4.4.3.1.

4.4.4.2 Preliminary flushing. Same as Sec. 4.4.3.2.

4.4.4.3 Chlorinating the main.

1. Same as Sec. 4.4.3.3(1).

2. At a point not more than 10 ft (3 m) downstream from the beginning of the new main, water entering the new main shall receive a dose of chlorine fed at a constant rate such that the water will have not less than 100 mg/L free chlorine. To ensure that this concentration is achieved, the chlorine concentration should be measured at regular intervals. The chlorine shall be applied continuously and for a sufficient period to develop a solid column, or slug, of chlorinated water that will, as it moves through the main, expose all interior surfaces to a concentration of approximately 100 mg/L for at least 3 hr.

3. The free chlorine residual shall be measured in the slug as it moves through the main. If at any time it drops below 50 mg/L, the flow shall be stopped; chlorination equipment shall be relocated at the head of the slug; and, as flow

resumes, chlorine shall be applied to restore the free chlorine in the slug to not less than 100 mg/L.

4. As the chlorinated water flows past fittings and valves, related valves and hydrants shall be operated so as to disinfect appurtenances and pipe branches.

Sec. 4.5 Final Flushing

4.5.1 *Clearing the main of heavily chlorinated water.* After the applicable retention period, heavily chlorinated water should not remain in prolonged contact with pipe. In order to prevent damage to the pipe lining or to prevent corrosion damage to the pipe itself, the heavily chlorinated water shall be flushed from the main fittings, valves, and branches until chlorine measurements show that the concentration in the water leaving the main is no higher than that generally prevailing in the distribution system or that is acceptable for domestic use.

4.5.2 *Disposing of heavily chlorinated water.* The environment to which the chlorinated water is to be discharged shall be inspected. If there is any possibility that the chlorinated discharge will cause damage to the environment, a neutralizing chemical shall be applied to the water to be wasted to thoroughly neutralize the residual chlorine (see Appendix C for neutralizing chemicals). Where necessary, federal, state, local, or provincial regulatory agencies should be contacted to determine special provisions for the disposal of heavily chlorinated water.

Sec. 4.6 Final Connections to Existing Mains (Optional)*

As an optional procedure, if required by the purchaser, water mains and appurtenances must be completely installed, flushed, disinfected, and satisfactory bacteriological sample results received prior to permanent connections being made to the active distribution system. Sanitary construction practices must be followed during installation of the final connection so that there is no contamination of the new or existing water main with foreign material or groundwater.

4.6.1 *Connections equal to or less than one pipe length (≤18 ft [5.5 m]).* As an optional procedure (if required by the purchaser), the new pipe, fittings, and valve(s) required for the connection may be spray-disinfected or swabbed with a minimum 1–5 percent solution of chlorine just prior to being installed, if the total length of the

*Optional Sec. 4.6 is not included as part of the standard unless specifically identified by the purchase documents.

connection from the end of a new main to the existing main is equal to or less than 18 ft (5.5 m).

4.6.2 *Connections greater than one pipe length (>18 ft [5.5 m]).* As an optional procedure, if required by the purchaser, the pipe required for the connection must be set up aboveground, disinfected, and bacteriological samples taken, as described in Sec. 5, if the total length of the connection from the end of a new main to the existing main is greater than 18 ft (5.5 m). After satisfactory bacteriological sample results have been received for the predisinfected pipe, the pipe can be used in connecting the new main to the active distribution system. Between the time the satisfactory bacteriological sample results are received and the time that the connection piping is installed, the ends of the piping must be sealed with plastic wraps, watertight plugs, or caps.

Sec. 4.7 Disinfection Procedures When Cutting Into or Repairing Existing Mains

The following procedures apply primarily when existing mains are wholly or partially dewatered. After the appropriate procedures have been completed, the existing main may be returned to service prior to the completion of bacteriological testing in order to minimize the time customers are without water. Leaks or breaks that are repaired with clamping devices while the mains remain full of pressurized water may present little danger of contamination and therefore may not require disinfection.

4.7.1 *Trench treatment.* When an existing main is opened, either by accident or by design, the excavation will likely be wet and may be badly contaminated from nearby sewers. Liberal quantities of hypochlorite applied to open trench areas will lessen the danger from this pollution. Tablets have the advantage in this situation, because they dissolve slowly and continue to release hypochlorite as water is pumped from the excavation.

4.7.2 *Swabbing with hypochlorite solution.* The interior of pipe and fittings (particularly couplings and sleeves) used in making the repair shall be swabbed or sprayed with a 1 percent hypochlorite solution before they are installed.

4.7.3 *Flushing.* Thorough flushing is the most practical means of removing contamination introduced during repairs. If valve and hydrant locations permit, flushing toward the work location from both directions is recommended. Flushing shall be started as soon as the repairs are completed and shall be continued until discolored water is eliminated.

4.7.4 *Slug chlorination.* Where practical, in addition to the procedures previously described, the section of the main in which the break is located shall be isolated, all service connections shut off, and the section flushed and chlorinated as described in Sec. 4.4.4. The dose may be increased to as much as 300 mg/L and the contact time reduced to as little as 15 min. After chlorination, flushing shall be resumed and continued until discolored water is eliminated and the chlorine concentration in the water exiting the main is no higher than the prevailing water in the distribution system or that which is acceptable for domestic use.

4.7.5 *Bacteriological samples.* Bacteriological samples following procedures in 5.1.3 shall be taken after repairs are completed to provide a record for determining the procedure's effectiveness. If the direction of flow is unknown, then samples shall be taken on each side of the main break. If positive bacteriological samples are recorded, then the situation shall be evaluated by the purchaser who can determine corrective action. Daily sampling shall be continued until two consecutive negative samples are recorded.

Sec. 4.8 Special Procedure for Caulked Tapping Sleeves

Before a tapping sleeve is installed, the exterior of the main to be tapped shall be thoroughly cleaned, and the interior surface of the sleeve shall be lightly dusted with calcium hypochlorite powder.

Tapping sleeves are used to avoid shutting down the main. After the tap is made, it is impossible to disinfect the annulus without shutting down the main and removing the sleeve. The space between the tapping sleeve and the tapped pipe is approximately 1/2 in. (13 mm), so that as little as 100 mg/ft^2 of calcium hypochlorite powder will provide a chlorine concentration of more than 50 mg/L.

SECTION 5: VERIFICATION

Sec. 5.1 Bacteriological Tests

5.1.1 *Standard conditions.* After final flushing and before the new water main is connected to the distribution system, two consecutive sets of acceptable samples, taken at least 24 hr apart, shall be collected from the new main. (NOTE: The pipe, the water loaded into the pipe, and any debris exert a chlorine demand that can interfere with disinfection.) At least one set of samples shall be

collected from every 1,200 ft (366 m) of the new water main, plus one set from the end of the line and at least one set from each branch. Samples shall be tested for bacteriological (chemical and physical) quality in accordance with *Standard Methods for the Examination of Water and Wastewater*; and shall show the absence of coliform organisms; and, if required, the presence of a chlorine residual. Turbidity, pH, and a standard heterotrophic plate count (HPC) test may be required at the option of the purchaser because new material does not typically contain coliforms but does typically contain HPC bacteria.

5.1.2 *Special conditions.* If trench water has entered the new main during construction or if, in the opinion of the purchaser, excessive quantities of dirt or debris have entered the new main, bacteriological samples shall be taken at intervals of approximately 200 ft (61 m), and the location shall be identified. Samples shall be taken of water that has stood in the new main for at least 16 hr after final flushing has been completed.

5.1.3 *Sampling procedure.* Samples for bacteriological analysis shall be collected in sterile bottles treated with sodium thiosulfate, as required by *Standard Methods for the Examination of Water and Wastewater.* No hose or fire hydrant shall be used in the collection of samples. (NOTE: For pipe repairs, if no other sampling port is available, well-flushed fire hydrants may be used with the understanding that they do not represent optimum sampling conditions.) A suggested combination blowoff and sampling tap used for mains up to and including 8-in. (200-mm) diameter is shown in Figure 2. There should be no water in the trench up to the connection for sampling. The sampling pipe must be dedicated and clean and disinfected and flushed prior to sampling. A corporation cock may be installed in the main with a copper-tube gooseneck assembly. After samples have been collected, the gooseneck assembly may be removed and retained for future use.

5.1.4 *Sample results.* If sample results from the lab indicate a measured HPC greater than 500 colony-forming units (cfu) per mL, flushing should be resumed and another coliform and HPC set of samples should be taken until no coliforms are present and the HPC is less than 500 cfu/mL.

5.1.5 *Record of compliance.* The record of compliance shall be the bacteriological test results certifying that the water sampled from the new water main is free of coliform bacteria contamination and is equal to or better than the bacteriologic water quality in the distribution system.

Sec. 5.2 Redisinfection

If the initial disinfection fails to produce satisfactory bacteriological results or if other water quality is affected, the new main may be reflushed and shall be resampled. If check samples also fail to produce acceptable results, the main shall be rechlorinated by the continuous-feed or slug method until satisfactory results are obtained—that being two consecutive sets of acceptable samples taken 24 hr apart.

NOTE: High velocities in the existing system, resulting from flushing the new main, may disturb sediment that has accumulated in the existing mains. When check samples are taken, it is advisable to sample water entering the new main to determine the source of turbidity.

SECTION 6: DELIVERY

This standard has no applicable information for this section.

APPENDIX A

Chlorine Residual Testing

This appendix is for information only and is not a part of ANSI/AWWA C651.

SECTION A.1: DPD DROP DILUTION METHOD (FOR FIELD TEST)

The N, N-diethyl-p-phenylenediamine (DPD) drop dilution method of approximating total residual chlorine is suitable for concentrations above 10 mg/L, such as those applied in the disinfection of water mains or tanks.

Sec. A.1.1 Apparatus

1. A graduated cylinder for measuring distilled water.
2. An automatic or safety pipette.
3. Two dropping pipettes that deliver a 1-mL sample in 20 drops. One pipette is for dispensing the water sample, and the other is for dispensing the DPD and buffer solutions. The pipettes should not be interchanged.
4. A comparator kit containing a suitable range of standards.

Sec. A.1.2 Reagents

1. DPD indicator solution. Prepare as prescribed in *Standard Methods for the Examination of Water and Wastewater.*

Sec. A.1.3 Procedure

1. Add 10 drops of DPD solution and 10 drops of buffer solution (or 20 drops of combined DPD–buffer solution) to a comparator cell.
2. Fill the comparator cell to the 10-mL mark with distilled water.
3. With a dropping pipette, add the water sample one drop at a time, mix until a red color is formed that matches one of the color standards.
4. Record the total number of drops used and the final chlorine reading obtained (that is, the chlorine reading of the matched standard).
5. Calculate the milligrams per liter of free residual chlorine as follows:

$$\text{mg/L chlorine} = \frac{\text{reading} \times 200}{\text{drops of sample}}$$

SECTION A.2: HIGH-RANGE CHLORINE TEST KITS

Several manufacturers produce high-range chlorine test kits that are inexpensive, easy to use, and satisfactory for the precision required.

APPENDIX B

Chlorine Dosages

This appendix is for information only and is not a part of ANSI/AWWA C651.

Table B.1 Amounts of chemicals required to produce various chlorine concentrations in 100,000 gal (378.5 m^3) of water*

Desired Chlorine Concentration in Water	Liquid Chlorine Required		Sodium Hypochlorite Required						Calcium Hypochlorite Required	
			5% Available Chlorine		10% Available Chlorine		15% Available Chlorine		65% Available Chlorine	
mg/L	*lb*	*(kg)*	*gal*	*(L)*	*gal*	*(L)*	*gal*	*(L)*	*lb*	*(kg)*
2	1.7	(0.77)	3.9	(14.7)	2.0	(7.6)	1.3	(4.9)	2.6	(1.18)
10	8.3	(3.76)	19.4	(73.4)	9.9	(37.5)	6.7	(25.4)	12.8	(5.81)
50	42.0	(19.05)	97.0	(367.2)	49.6	(187.8)	33.4	(126.4)	64.0	(29.03)

*Amounts of sodium hypochlorite are based on concentrations of available chlorine by volume. For either sodium hypochlorite or calcium hypochlorite, extended or improper storage of chemicals may have caused a loss of available chlorine.

Table B.2 Amounts of chemicals required to produce chlorine concentration of 200 mg/L in various volumes of water*

Volume of Water		Liquid Chlorine Required		Sodium Hypochlorite Required						Calcium Hypochlorite Required	
				5% Available Chlorine		10% Available Chlorine		15% Available Chlorine		65% Available Chlorine	
gal	*(L)*	*lb*	*(g)*	*gal*	*(L)*	*gal*	*(L)*	*gal*	*(L)*	*lb*	*(g)*
10	(37.9)	0.02	(9.1)	0.04	(0.15)	0.02	(0.08)	0.02	(0.08)	0.03	(13.6)
50	(189.3)	0.1	(45.4)	0.2	(0.76)	0.1	(0.38)	0.07	(0.26)	0.15	(68.0)
100	(378.5)	0.2	(90.7)	0.4	(1.51)	0.2	(0.76)	0.15	(0.57)	0.3	(136.1)
200	(757.1)	0.4	(181.4)	0.8	(3.03)	0.4	(1.51)	0.3	(1.14)	0.6	(272.2)

*Amounts of sodium hypochlorite are based on concentrations of available chlorine by volume. For either sodium hypochlorite or calcium hypochlorite, extended or improper storage of chemicals may have caused a loss of available chlorine.

APPENDIX C

Disposal of Heavily Chlorinated Water

This appendix is for information only and is not a part of ANSI/AWWA C651.

1. Check with the local sewer department for the conditions of disposal to the sanitary sewer.

2. Chlorine residual of water being disposed will be neutralized by treating with one of the chemicals listed in Table C.1.

Table C.1 Amounts of chemicals required to neutralize various residual chlorine concentrations in 100,000 gal (378.5 m^3) of water*

Residual Chlorine Concentration	Sulfur Dioxide (SO_2)		Sodium Bisulfite ($NaHSO_3$)		Sodium Sulfite (Na_2SO_3)		Sodium Thiosulfate ($Na_2S_2O_3 \cdot 5H_2O$)		Ascorbic Acid† ($C_6O_8H_6$)	
mg/L	*lb*	*(kg)*	*lb*	*(kg)*	*lb*	*(kg)*	*lb*	*kg*	*lb*	*kg*
1	0.8	(0.36)	1.2	(0.54)	1.4	(0.64)	1.2	(0.54)	2.1	(0.95)
2	1.7	(0.77)	2.5	(1.13)	2.9	(1.32)	2.4	(1.09)	4.2	(1.90)
10	8.3	(3.76)	12.5	(5.67)	14.6	(6.62)	12.0	(5.44)	20.9	(9.47)
50	41.7	(18.91)	62.6	(28.39)	73.0	(33.11)	60.0	(27.22)	104	(47.11)

*Except for residual chlorine concentration, amounts are in pounds (kilograms).

†User should confirm required dosage with chemical supplier.