Dist	COUNTY	LOCATION CODE	POST MILES TOTAL PROJECT	SHEET No.	TOTAL SHEETS
08	SBd	5712		1	22

STATE OF CALIFORNIA

DEPARTMENT OF TRANSPORTATION

PROJECT PLANS FOR BUILDING CONSTRUCTION

IN SAN BERNARDINO COUNTY
IN BLOOMINGTON
AT MAGANA-ORTEGA MAINTENANCE STATION
AT 451 WEST SLOVER AVENUE

TO BE SUPPLEMENTED BY STANDARD PLANS DATED MAY 2006

INDEX OF PLANS

SHEET No.	DESCRIPTION
1	TITLE AND LOCATION MAP
2-5	REVISED AND NEW STANDARD PLANS
BUILDING PLANS	
6	EXISTING GENERAL PLAN
7-13	MECHANICAL PLANS
14-22	ELECTRICAL PLANS

THE STANDARD PLANS LIST APPLICABLE TO THIS CONTRACT IS INCLUDED IN THE NOTICE TO BIDDERS AND SPECIAL PROVISIONS BOOK.

LOCATION MAP

LOCATION OF CONSTRUCTION
MAGANA-ORTEGA MAINTENANCE STATION
LOCATION CODE No. 5712

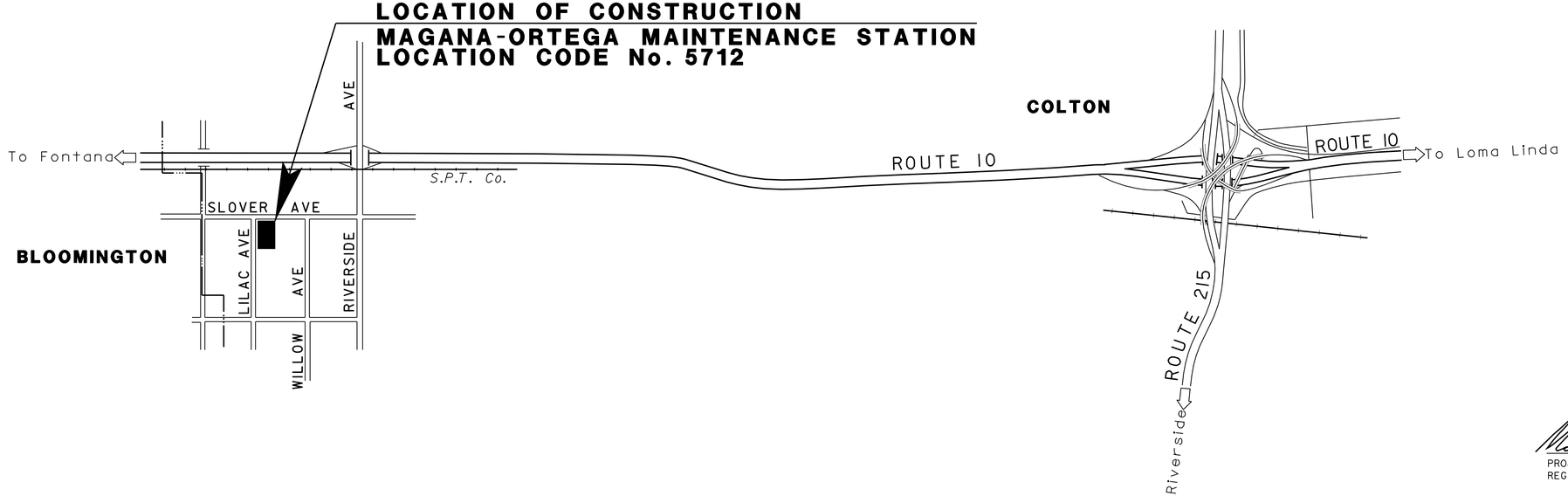

Project Scope: Project Scope consists of constructing a compressed natural gas (CNG) fuel station capable of both time fill, and quick fill fueling of CNG powered vehicles.

NO SCALE

THE CONTRACTOR SHALL POSSESS THE CLASS (OR CLASSES) OF LICENSE AS SPECIFIED IN THE "NOTICE TO BIDDERS."

03-15-12
PROJECT ENGINEER DATE
REGISTERED MECHANICAL ENGINEER

REGISTERED PROFESSIONAL ENGINEER
MARK HEDGLIN
No. M32912
Exp. 9-30-14
MECH
STATE OF CALIFORNIA

December 24, 2012
PLANS APPROVAL DATE

THE STATE OF CALIFORNIA OR ITS OFFICERS OR AGENTS SHALL NOT BE RESPONSIBLE FOR THE ACCURACY OR COMPLETENESS OF SCANNED COPIES OF THIS PLAN SHEET.

PROJECT MANAGER MUSTAPHA IAALI

DESIGN ENGINEER MARK HEDGLIN

CONTRACT No.	08-0M0204
PROJECT ID	0800000454

LAST REVISION DATE PLOTTED => 16-JAN-2013 TIME PLOTTED => 05:35

DIST	COUNTY	ROUTE	POST MILES TOTAL PROJECT	SHEET NO.	TOTAL SHEETS
08	SBd	5712		2	22

Randell D. Hiatt
REGISTERED CIVIL ENGINEER

June 6, 2008
PLANS APPROVAL DATE

REGISTERED PROFESSIONAL ENGINEER
Randell D. Hiatt
No. C50200
Exp. 6-30-09
CIVIL
STATE OF CALIFORNIA

The State of California or its officers or agents shall not be responsible for the accuracy or completeness of electronic copies of this plan sheet.

To accompany plans dated 12-24-12

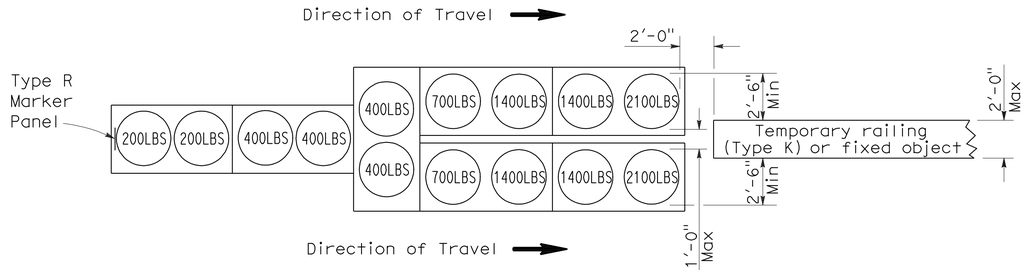

ARRAY 'TU14'

Approach speed 45 mph or more

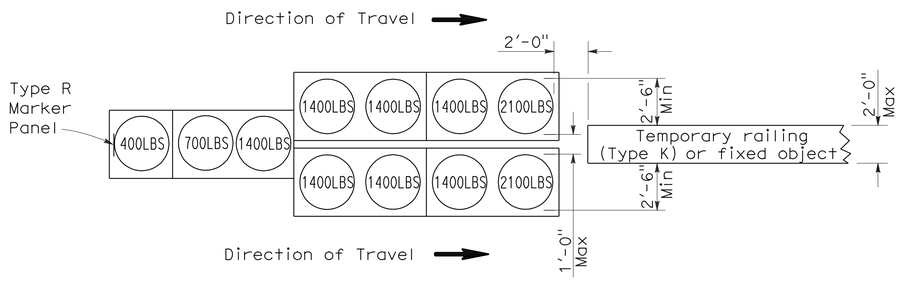

ARRAY 'TU11'

Approach speed less than 45 mph

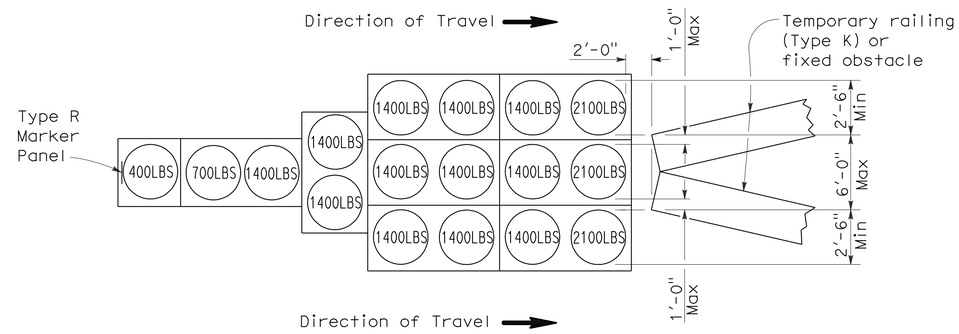

ARRAY 'TU17'

Approach speed less than 45 mph

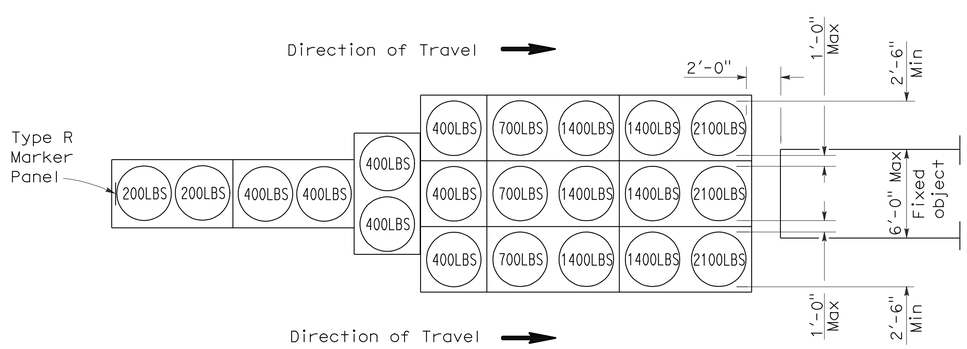

ARRAY 'TU21'

Approach speed 45 mph or more

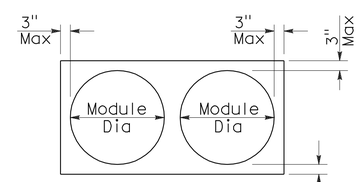

PLAN

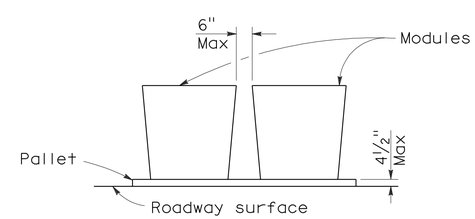

ELEVATION

CRASH CUSHION PALLET DETAIL

See Note 7

NOTES:

1. (XXX) Indicates sand filled module location and weight of sand in pounds for each module. Module spacing is based on the greater diameter of the module.
2. All sand weights are nominal.
3. Temporary crash cushion arrays shall not encroach on the traveled way.
4. Place the top of Type R marker panel 1" below the module lid.
5. Refer to Standard Plan A73B for marker details.
6. Approach speeds indicated conform to NCHRP 350 Report criteria.
7. Use of pallets is optional.

STATE OF CALIFORNIA
DEPARTMENT OF TRANSPORTATION

TEMPORARY CRASH CUSHION, SAND FILLED (UNIDIRECTIONAL)

NO SCALE

RSP T1A DATED JUNE 6, 2008 SUPERSEDES STANDARD PLAN T1A
DATED MAY 1, 2006 - PAGE 211 OF THE STANDARD PLANS BOOK DATED MAY 2006.

REVISED STANDARD PLAN RSP T1A

2006 REVISED STANDARD PLAN RSP T1A

DIST	COUNTY	ROUTE	POST MILES TOTAL PROJECT	SHEET NO.	TOTAL SHEETS
08	SBd	5712		3	22

Randell D. Hiatt
REGISTERED CIVIL ENGINEER

June 6, 2008
PLANS APPROVAL DATE

REGISTERED PROFESSIONAL ENGINEER
Randell D. Hiatt
No. C50200
Exp. 6-30-09
CIVIL
STATE OF CALIFORNIA

The State of California or its officers or agents shall not be responsible for the accuracy or completeness of electronic copies of this plan sheet.

To accompany plans dated 12-24-12

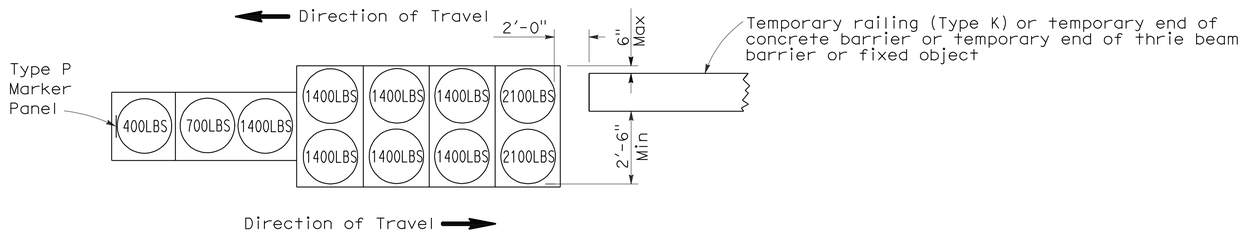

ARRAY 'TB11'

Approach speed less than 45 mph

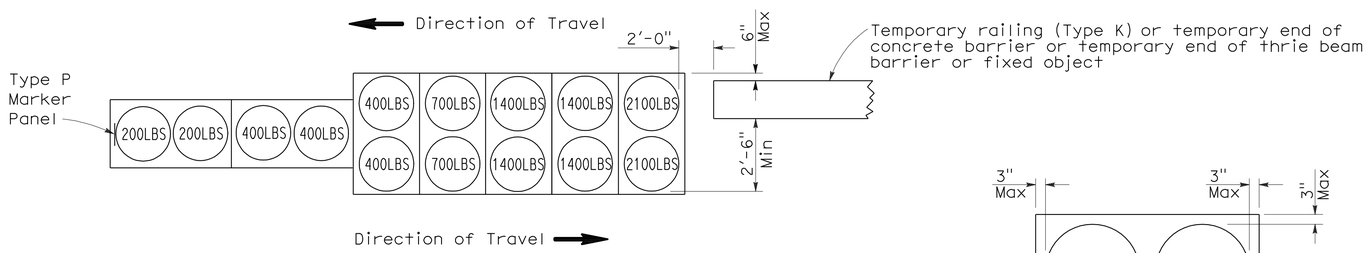

ARRAY 'TB14'

Approach speed 45 mph or more

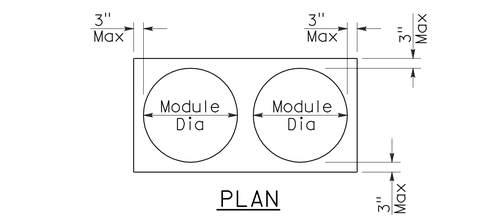

PLAN

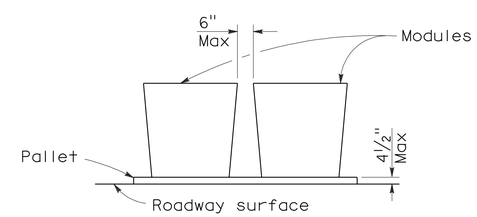

ELEVATION

CRASH CUSHION PALLET DETAIL

See Note 7

NOTES:

1. (XXX) Indicates sand filled module location and weight of sand in pounds for each module. Module spacing is based on the greater diameter of the module.
2. All sand weights are nominal.
3. Temporary crash cushion arrays shall not encroach on the traveled way.
4. Place the Type P marker panel so that the bottom of the panel rests upon the pallet.
5. Refer to Standard Plan A73B for marker details.
6. Approach speeds indicated conform to NCHRP 350 Report criteria.
7. Use of pallets is optional.

STATE OF CALIFORNIA
DEPARTMENT OF TRANSPORTATION

TEMPORARY CRASH CUSHION, SAND FILLED (BIDIRECTIONAL)

NO SCALE

RSP T1B DATED JUNE 6, 2008 SUPERSEDES STANDARD PLAN T1B
DATED MAY 1, 2006 - PAGE 212 OF THE STANDARD PLANS BOOK DATED MAY 2006.

REVISED STANDARD PLAN RSP T1B

2006 REVISED STANDARD PLAN RSP T1B

5-15-08

DIST	COUNTY	ROUTE	POST MILES TOTAL PROJECT	SHEET NO.	TOTAL SHEETS
08	SBd	5712		4	22

Randell D. Hiatt
REGISTERED CIVIL ENGINEER

June 6, 2008
PLANS APPROVAL DATE

REGISTERED PROFESSIONAL ENGINEER
Randell D. Hiatt
No. C50200
Exp. 6-30-09
CIVIL
STATE OF CALIFORNIA

The State of California or its officers or agents shall not be responsible for the accuracy or completeness of electronic copies of this plan sheet.

To accompany plans dated 12-24-12

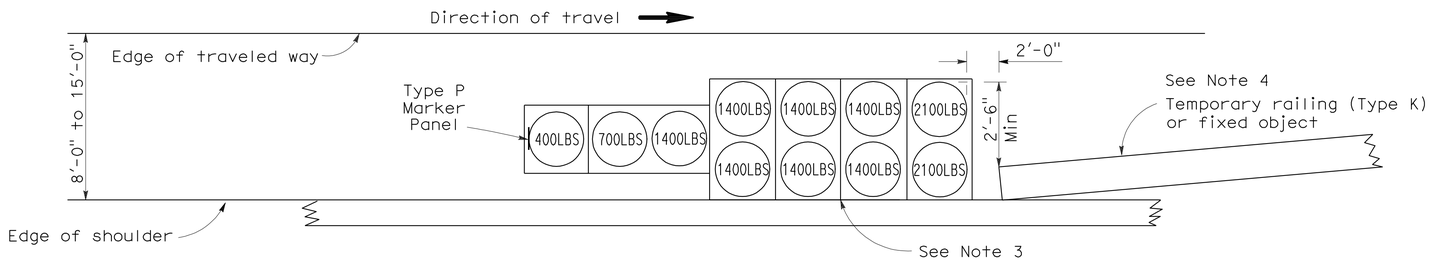

ARRAY 'TS11'

Approach speed less than 45 mph
See Note 9

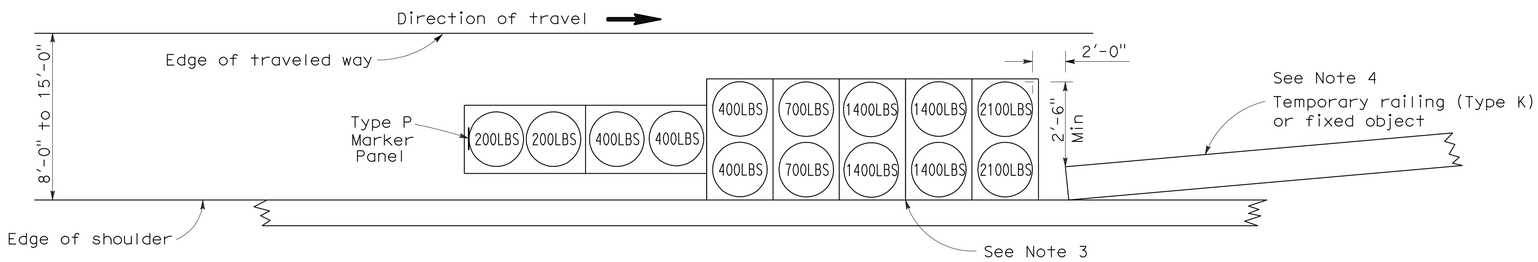

ARRAY 'TS14'

Approach speed 45 mph or more
See Note 9

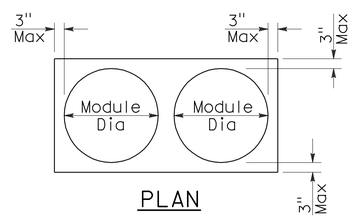

PLAN

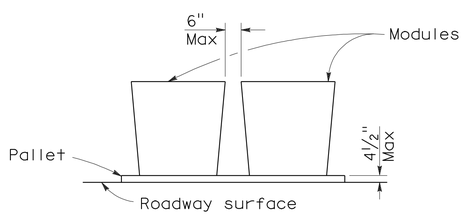

ELEVATION

CRASH CUSHION PALLET DETAIL

See Note 11

NOTES:

1. (XXX) Indicates sand filled module location and weight of sand in pounds for each module. Module spacing is based on the greater diameter of the module.
2. All sand weights are nominal.
3. The temporary crash cushion arrays shown on this plan shall be used only in locations where there will be traffic on one side of the temporary crash cushion array.
4. If the fixed object or approach end of the temporary railing is less than 15'-0" from the edge of traveled way, a temporary crash cushion is required in a construction or work zone.
5. Temporary crash cushion arrays shall not encroach on the traveled way.
6. Arrays for median shoulders shall conform to details shown on this plan for outside shoulders.
7. Place the Type P marker panel so that the bottom of the panel rests upon the pallet and faces traffic.
8. Refer to Standard Plan A73B for marker details.
9. For shoulder widths less than 8'-0", appropriate approved crash cushion protection, other than sand filled modules, shall be provided at fixed objects and at approach ends of temporary railing. The specific type of crash cushion shall be as shown on the project plans or as specified in the Special Provisions, or if not shown on the project plans or specified in the Special Provisions, shall be as approved by the Engineer.
10. Approach speeds indicated conform to NCHRP 350 Report criteria.
11. Use of pallets is optional.

STATE OF CALIFORNIA
DEPARTMENT OF TRANSPORTATION

TEMPORARY CRASH CUSHION, SAND FILLED (SHOULDER INSTALLATIONS)

NO SCALE

RSP T2 DATED JUNE 6, 2008 SUPERSEDES STANDARD PLAN T2
DATED MAY 1, 2006 - PAGE 213 OF THE STANDARD PLANS BOOK DATED MAY 2006.

REVISED STANDARD PLAN RSP T2

2006 REVISED STANDARD PLAN RSP T2

Dist	COUNTY	ROUTE	POST MILES TOTAL PROJECT	SHEET No.	TOTAL SHEETS
08	SBd	5712		5	22

Randell D. Hiatt
REGISTERED CIVIL ENGINEER

May 20, 2011
PLANS APPROVAL DATE

REGISTERED PROFESSIONAL ENGINEER
Randell D. Hiatt
No. C50200
Exp. 6-30-11
CIVIL
STATE OF CALIFORNIA

The State of California or its officers or agents shall not be responsible for the accuracy or completeness of electronic copies of this plan sheet.

To accompany plans dated 12-24-12

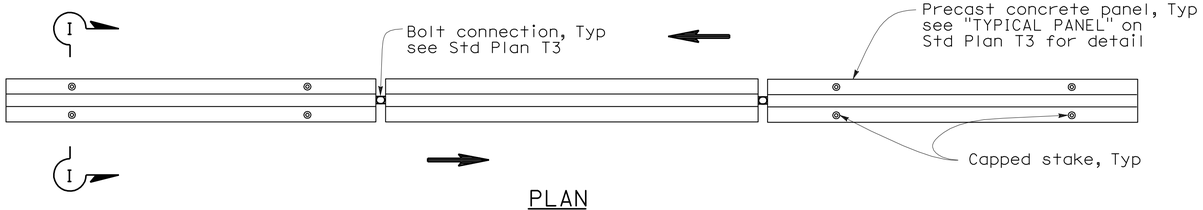

PLAN

RAILING STAKING CONFIGURATION FOR TWO-WAY TRAFFIC

See Note 1

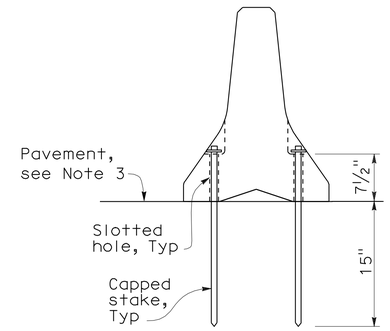

SECTION I-I

NOTES:

1. Where Type K Temporary Railing is placed as a temporary or long term barrier in two-way traffic on highways with less than 24" from the edge of traveled way, use four capped stakes per every other panel with end panels staked.
2. Where Type K Temporary Railing is placed 3" to 24" from the edge of an excavation on highways, use two capped stakes per panel along the traffic side.
3. Staked Type K Temporary Railing must be supported by at least 4" thick concrete, hot mix asphalt or existing asphalt concrete pavement.
4. The minimum yield strength for the washer must be 60,000 psi.
5. Direction of adjacent traffic indicated by ⟹.

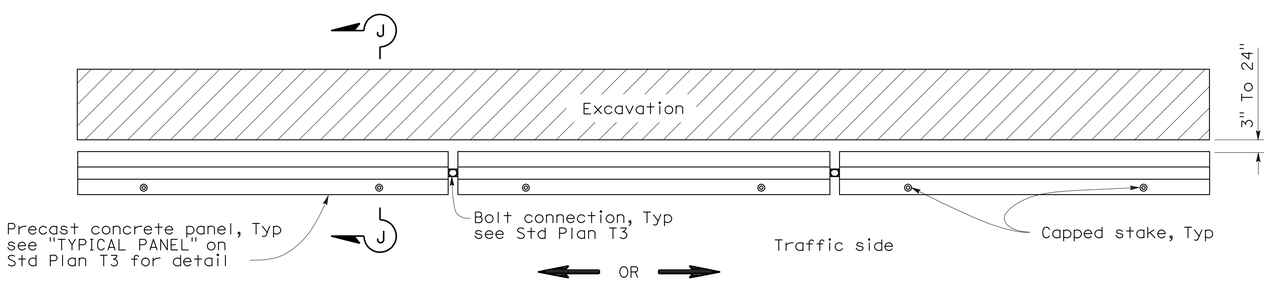

PLAN

RAILING STAKING CONFIGURATION ADJACENT TO AN EXCAVATION

See Note 2

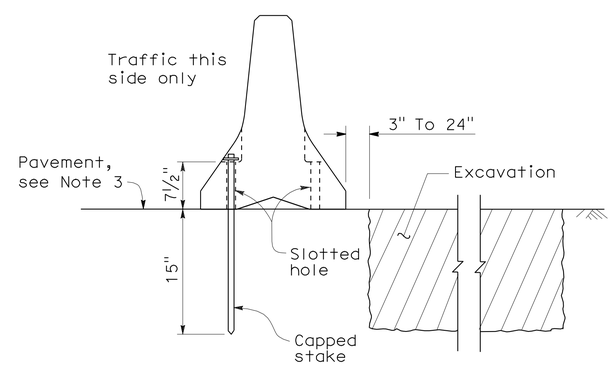

SECTION J-J

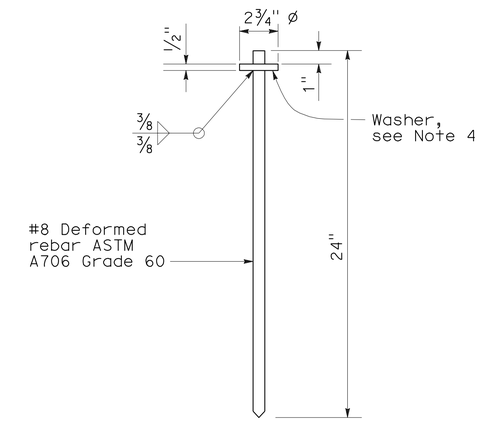

CAPPED STAKE DETAIL

STATE OF CALIFORNIA
DEPARTMENT OF TRANSPORTATION

TEMPORARY RAILING (TYPE K)

NO SCALE

NSP T3A DATED MAY 20, 2011 SUPPLEMENTS
THE STANDARD PLANS BOOK DATED MAY 2006.

NEW STANDARD PLAN NSP T3A

2006 NEW STANDARD PLAN NSP T3A

Dist	COUNTY	LOCATION CODE	POST MILES TOTAL PROJECT	SHEET No.	TOTAL SHEETS
08	SBd	5712		6	22

REGISTERED ENGINEER-MECHANICAL 5-7-12

REGISTERED PROFESSIONAL ENGINEER MARK HEDGLIN No. M32912 Exp. 9-30-14 MECH STATE OF CALIFORNIA

12-24-12
PLANS APPROVAL DATE

The State of California or its officers or agents shall not be responsible for the accuracy or completeness of scanned copies of this plan sheet.

INDEX OF SHEETS

SHEET NO.	DESCRIPTION
GP	EXISTING GENERAL PLAN
MECHANICAL PLANS	
M-0	MECHANICAL LEGEND
M-1	MECHANICAL SITE PLAN
M-2	CNG EQUIPMENT LAYOUT
M-3	COMPRESSOR DETAILS
M-4	GAS DRYER DETAILS
M-5	MECHANICAL DETAILS NO. 1
M-6	MECHANICAL DETAILS NO. 2
ELECTRICAL PLANS	
EE-0	LEGEND
EE-1	EXISTING SITE PLAN
EE-2	MODIFIED SITE PLAN
EE-3	EXISTING MAIN SWITCHBOARD
EE-4	MODIFIED MAIN SWITCHBOARD
EE-5	EXISTING GAS HOUSE
EE-6	ENLARGED CNG STATION POWER PLAN
EE-7	PANEL FW DETAILS
EE-8	DETAILS

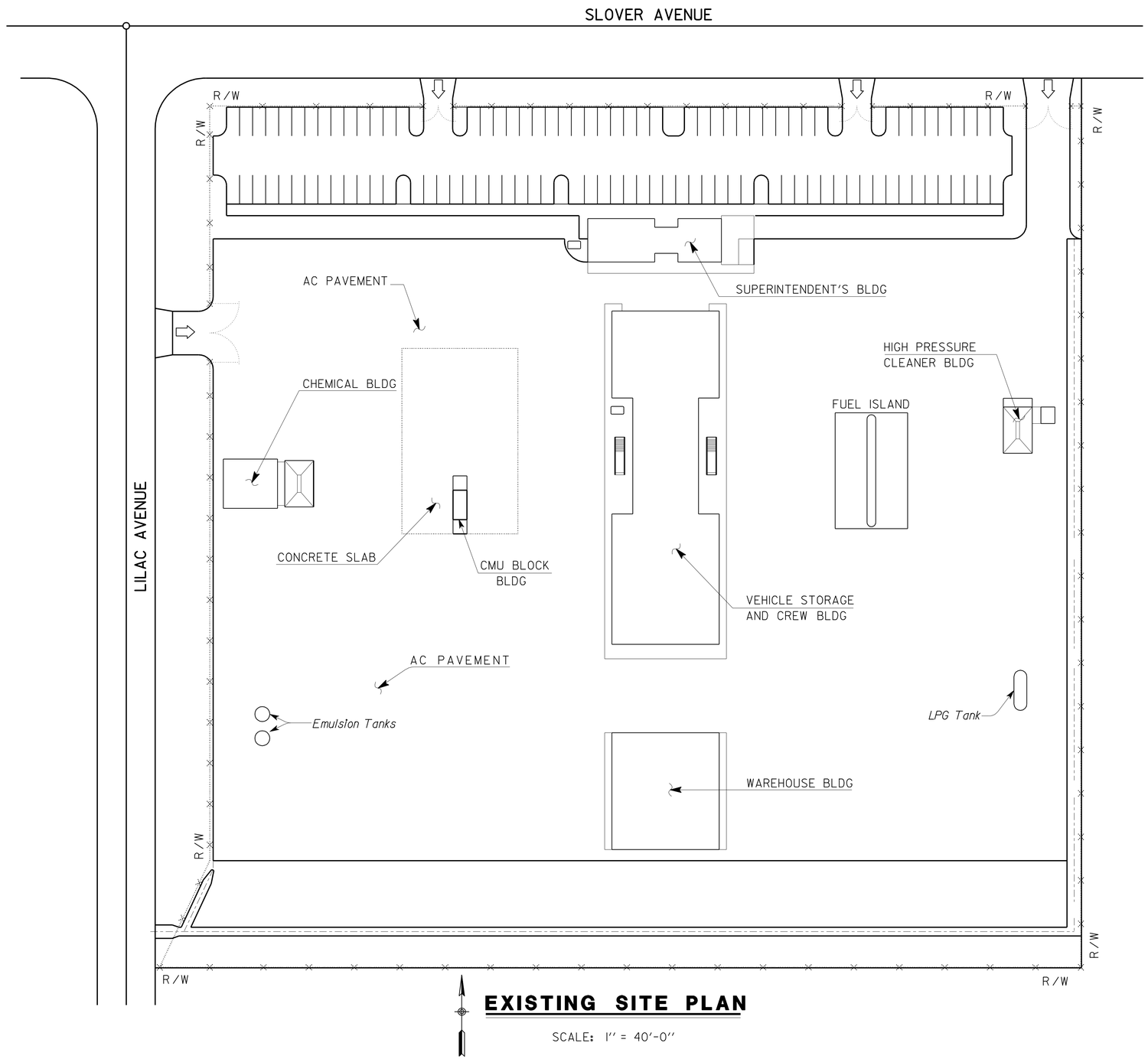

EXISTING SITE PLAN

SCALE: 1" = 40'-0"

Fire Marshal Stamp

CALIFORNIA STATE FIRE MARSHAL
APPROVED

Approval of this plan does not authorize or approve any omission or deviation from applicable regulations. Final approval is subject to field inspection. One set of approved plans shall be available on the project site at all times.

Reviewed by: FRANCIS SOLICH

Date: 4/30/12

CSFM File Number: 01-36-11-0012

APPLICABLE CODES
2010 California Building Code (CBC) Title 24, Part 2 CCR
2010 California Electrical Code (CEC) Title 24, Part 3 CCR
2010 California Fire Code (CFC) Title 24, Part 9 CCR
2010 California Mechanical Code (CMC) Title 24, Part 4 CCR
NFPA 30A 2012 Edition NFPA 52 2012 Edition
2010 Americans with Disabilities Act (ADA)

Note:

For accurate right of way and access data, contact right of way engineering at the district office.

DESIGN SUPERVISOR
DESIGN ENGINEER

	BY	CHECKED
DESIGN	Mark Hedglin	Tom Hatam
DETAILS	Rudy Sarte	Mark Hedglin
QUANTITIES	Mark Hedglin	Tom Hatam

STATE OF CALIFORNIA DEPARTMENT OF TRANSPORTATION

DIVISION OF ENGINEERING SERVICES
ELECTRICAL-MECHANICAL-WATER AND WASTEWATER DESIGN

BRIDGE No.
POST MILE

MAGANA-ORTEGA MS

EXISTING GENERAL PLAN

SHEET **GP**

DS OSD 2139A (4/89)
FILE NO.:

FILE => gp.dgn
DATE PLOTTED => 16-JAN-2013 TIME PLOTTED => 05:35

ORIGINAL SCALE IN INCHES FOR REDUCED PLANS 0 1 2 3

UNIT 3580
PROJECT NUMBER & PHASE 08000004541
EA 08-0M0204

DISREGARD PRINTS BEARING EARLIER REVISION DATES

REVISION DATES (PRELIMINARY STAGE ONLY) 05-05-10 06-02-10 06-30-10 07-28-10 08-25-10 09-22-10 11-18-10 12-08-10 3-15-12 12-4-12

SHEET OF

USERNAME => s121614 DATE PLOTTED => 16-JAN-2013 TIME PLOTTED => 05:35

V|=|

Dist	COUNTY	LOCATION CODE	POST MILES TOTAL PROJECT	SHEET No.	TOTAL SHEETS
08	SBd	5712		7	22

REGISTERED ENGINEER-MECHANICAL 5-7-12

REGISTERED PROFESSIONAL ENGINEER MARK HEDGLIN No. M32912 Exp. 9-30-14 MECH STATE OF CALIFORNIA

12-24-12
PLANS APPROVAL DATE

The State of California or its officers or agents shall not be responsible for the accuracy or completeness of scanned copies of this plan sheet.

Fire Marshal Stamp

CALIFORNIA STATE FIRE MARSHAL APPROVED

Approval of this plan does not authorize or approve any omission or deviation from applicable regulations. Final approval is subject to field inspection. One set of approved plans shall be available on the project site at all times.

Reviewed by: FRANCIS SOLICH

Date: 4/30/12

PLUMBING

- Cold Water
- A — Compressed Air
- G — Gas
- D — Equipment Drain
- F — Fire Water
- Hot Water
- Hot Water Return
- LPG — Liquified Petroleum Gas
- R — Relief Valve Discharge Pipe
- SS — Sanitary Sewer
- Sanitary Sewer (above grade)
- Sanitary Sewer (below grade)
- Sanitary Sewer Vent

PIPE FITTINGS AND VALVES

- Cap ,Threaded
- Elbow,Turned Down
- Elbow,Turned Up
- Reducer,Concentric
- Pressure Gauge (with Valve and Snubber)
- Strainer
- Union
- Union,Insulating
- Valve,Ball
- Valve,Check
- Valve,Gas
- Valve,Gate
- Valve,Safety Relief
- Valve,Pressure Reducing
- Valve,Pressure/Temperature Relief
- Water Hammer Arrestor

HEATING, VENTILATING AND AIR CONDITIONING

- Balance Damper
- Flexible Duct
- EA — Exhaust Air
- RA — Return Air
- SA — Supply Air
- ER or CFM/ER CFM — Exhaust Register
- or SIZE CFM — Return
- or SIZE CFM — Supply Diffuser
- T — Thermostat
- TS — Time Switch
- Anode Test Station
- Three Wire Test Station
- EF — Exhaust Fan
- FE — Fire Extinguisher
- BC — Bypass Controller

MISCELLANEOUS

- L — Angle
- ℄ — Centerline
- ø — Diameter
- Section / Elevation Letter
- Sheet Number
- Detail Number
- Sheet Number

MECHANICAL ABBREVIATIONS:

A/C	Air Conditioning
ABS	Acrylonitrile Butadiene Styrene
AC	Asphalt Concrete
AD	Air Drop
AP	Alternative Pipe
ATF	Automatic Transmission Fluid
AWG	American Wire Gauge
BFP	Backflow Preventer
BLDG	Building
BTU	British Thermal Unit
BTUH	British Thermal Unit Per Hour
BV	Balancing Valve
C	Conduit
CD	Ceiling Diffuser
CFM	Cubic Feet Per Minute
CI	Cast-Iron
CNG	Compressed Natural Gas
CO	Cleanout
COTF	Cleanout Through Floor
COTG	Cleanout Through Grade
COTW	Cleanout To Wall
CV	Check Valve
CW	Cold Water
D	Depth
DB	Dry Bulb
DF	Drinking Fountain
DH	Duct Heater
DIA	Diameter
(E)	Existing
EA	Exhaust Air
EEW	Emergency Eyewash
EF	Exhaust Fan
EL	Elevation
EWC	Electric Water Cooler
EWH	Electric Water Heater
FC	Flexible Connection
FD	Floor Drain
FDC	Fire Department Connection
FE	Fire Extinguisher
FG	Finish Grade
FH	Fire Hydrant
FL	Flow Line
FTR	Flue Through Rooof
FS	Flow Switch
GA	Gauge
GALV	Galvanized
GLV	Globe Valve
GPM	Gallons Per Minute
GSP	Galvanized Steel Pipe
GV	Gate Valve
GYP	Gypsum
H	Height
HB	Hydrant Box
H/C	Hot Water,High Pressure Cleaner
HF	Hose Faucet
HVAC	Heating,Ventilating And Air Conditioning
HW	Hot Water
HZ	Hertz
ID	Inside Diameter
IE	Invert Elevation
IN	Inch
IPS	International Pipe Standard
KS	Kitchen Sink
LAV	Lavatory
LPG	Liquified Petroleum Gas
LS	Lab Sink
MAX	Maximum
MAN	Manhole
MIN	Minimum
NFPA	National Fire Protection Association
NIC	Not In Contract
NO	Number
NPT	National Pipe Thread
NST	National Standard Thread
OA	Outside Air
OC	On Center
OD	Outside Diameter
OG	Original Ground
PCC	Portland Cement Concrete
PDS	Pressure Differential Switch
PH	Phase
PRV	Pressure Reducing Valve
PSI	Pounds Per Square Inch
PVC	Polyvinyl Chloride
R	Radius
REG	Register
RA	Return Air
RCP	Reinforced Concrete Pipe
REQ	Required
RH	Radiant Heater
RV	Relief Valve
S/S	Service Sink
SA	Supply Air
SCFM	Standard Cubic Feet per Minute
SCH	Schedule
SDS	Sanitary Dump Station
SF	Supply Fan
SHR	Shower
SP	Static Pressure
SS	Sanitary Sewer
STA	Station
STD	Standard
TCV	Temperature Control Valve
TOT	Total
TP	Trap Primer
TS	Time Switch
TYP	Typical
UH	Unit Heater
URI	Urinal
V	Vent
VAC	Voltage,Alternating Current
VR	Vent Riser
VTR	Vent Thru Roof
W	Width
W/	With
W/O	Without
WB	Wet Bulb
WC	Water Closet
W.C.	Water Column
WH	Wall Heater
WHA	Water Hammer Arrestor
WLS	Water Level Switch
WP	Weatherproof
WS	Wash Sink
WSP	Welded Steel Pipe

THIS DRAWING ACCURATE FOR MECHANICAL WORK ONLY

	BY	CHECKED
DESIGN	Mark Hedglin	Tom Hatam
DETAILS	Rudy Sarte	Mark Hedglin
QUANTITIES	Mark Hedglin	Tom Hatam

STATE OF CALIFORNIA DEPARTMENT OF TRANSPORTATION

DIVISION OF ENGINEERING SERVICES ELECTRICAL-MECHANICAL-WATER AND WASTEWATER DESIGN

BRIDGE No.

POST MILE

MAGANA-ORTEGA MS

MECHANICAL LEGEND

SHEET **M-0**

DS OSD 2139A (4/89)
FILE NO.:

FILE => m_0.dgn
DATE PLOTTED => 16-JAN-2013 TIME PLOTTED => 05:35

ORIGINAL SCALE IN INCHES FOR REDUCED PLANS 0 1 2 3

UNIT 3580
PROJECT NUMBER & PHASE 08000004541
EA 08-0M0204

DISREGARD PRINTS BEARING EARLIER REVISION DATES

REVISION DATES (PRELIMINARY STAGE ONLY) 05-05-10 06-02-10 06-30-10 07-28-10 08-25-10 09-22-10 11-18-10 12-08-10 3-15-12 12-4-12

SHEET OF

USERNAME => s12614 DATE PLOTTED => 16-JAN-2013 TIME PLOTTED => 05:35

V|=|

Dist	COUNTY	LOCATION CODE	POST MILES TOTAL PROJECT	SHEET No.	TOTAL SHEETS
08	SBd	5712		8	22

REGISTERED ENGINEER-MECHANICAL 5-7-12

REGISTERED PROFESSIONAL ENGINEER MARK HEDGLIN No. M32912 Exp. 9-30-14 MECH STATE OF CALIFORNIA

12-24-12
PLANS APPROVAL DATE

The State of California or its officers or agents shall not be responsible for the accuracy or completeness of scanned copies of this plan sheet.

Fire Marshal Stamp

CALIFORNIA STATE FIRE MARSHAL APPROVED

Approval of this plan does not authorize or approve any omission or deviation from applicable regulations. Final approval is subject to field inspection. One set of approved plans shall be available on the project site at all times.

Reviewed by: FRANCIS SOLICH

Date: 4/30/12

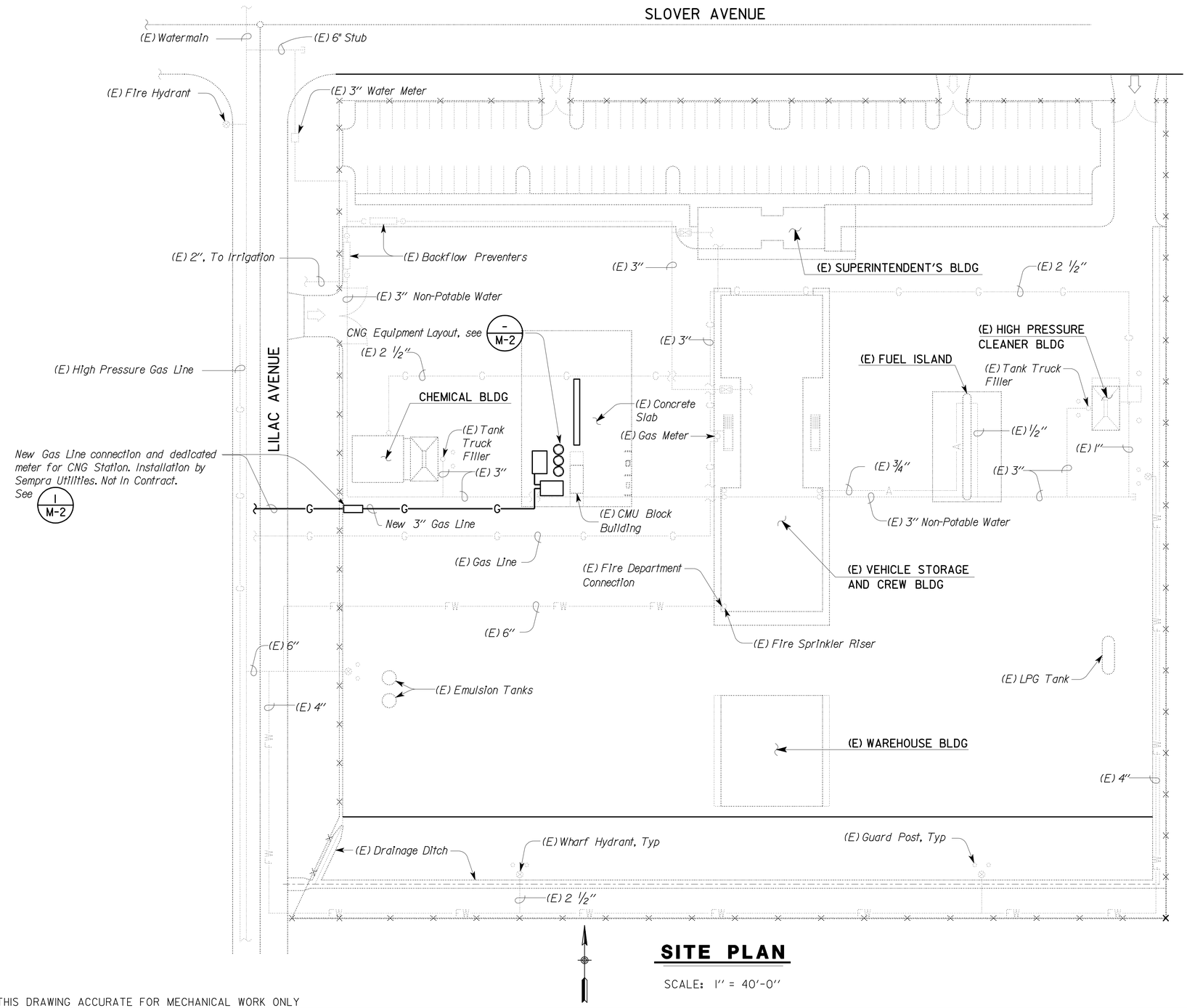

SITE PLAN

SCALE: 1" = 40'-0"

Notes:

1. *The Contractor shall verify all controlling field dimensions before order or fabricating any material.*
2. *The Contractor shall verify and locate (E) underground utility lines prior to working below grade.*

THIS DRAWING ACCURATE FOR MECHANICAL WORK ONLY

	BY	CHECKED
DESIGN	Mark Hedglin	Tom Hatam
DETAILS	Rudy Sarte	Mark Hedglin
QUANTITIES	Mark Hedglin	Tom Hatam

STATE OF CALIFORNIA DEPARTMENT OF TRANSPORTATION

DIVISION OF ENGINEERING SERVICES
ELECTRICAL-MECHANICAL-WATER AND WASTEWATER DESIGN

BRIDGE No.
POST MILE

MAGANA-ORTEGA MS

MECHANICAL SITE PLAN

SHEET **M-1**

DS OSD 2139A (4/89)
FILE NO.:

FILE => m_1.dgn
DATE PLOTTED => 16-JAN-2013 TIME PLOTTED => 05:35

ORIGINAL SCALE IN INCHES FOR REDUCED PLANS 0 1 2 3

UNIT 3580
PROJECT NUMBER & PHASE 08000004541
EA 08-0M0204

DISREGARD PRINTS BEARING EARLIER REVISION DATES

REVISION DATES (PRELIMINARY STAGE ONLY) 05-05-10 06-02-10 06-30-10 07-28-10 08-25-10 09-22-10 11-10-10 12-08-10 3-15-12 12-4-12

SHEET OF

USERNAME => s12161d4 DATE PLOTTED => 16-JAN-2013 TIME PLOTTED => 05:35

V|=|

Dist	COUNTY	LOCATION CODE	POST MILES TOTAL PROJECT	SHEET No.	TOTAL SHEETS
08	SBd	5712		9	22

REGISTERED ENGINEER-MECHANICAL 12-08-10

REGISTERED PROFESSIONAL ENGINEER MARK HEDGLIN No. M32912 Exp. 9-30-14 MECH STATE OF CALIFORNIA

12-24-12
PLANS APPROVAL DATE

The State of California or its officers or agents shall not be responsible for the accuracy or completeness of scanned copies of this plan sheet.

Notes:

1. *Accessible route of travel to Fuel Control Terminal needs not be identified on the plan as any vehicles may park next to the Clear Level Area by the Fuel Control Terminal.*
2. *Install Bleeder Valves on valves and filters regularly removed for service.*

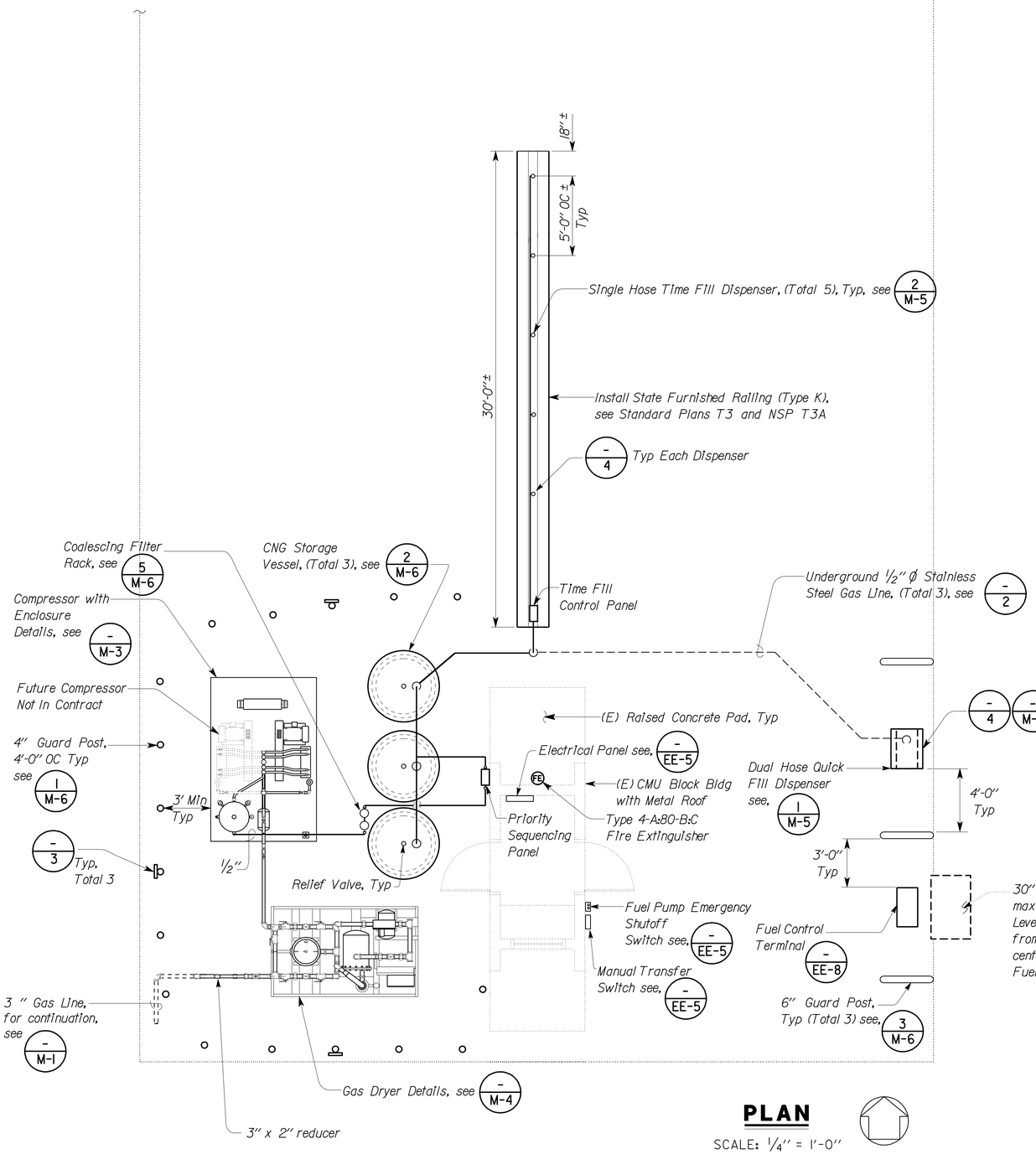

PLAN

SCALE: ¼" = 1'-0"

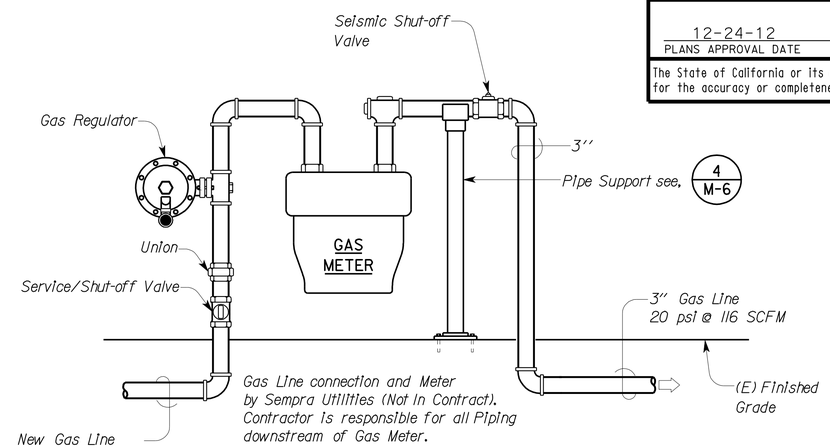

1 GAS METER AND REGULATOR

NO SCALE

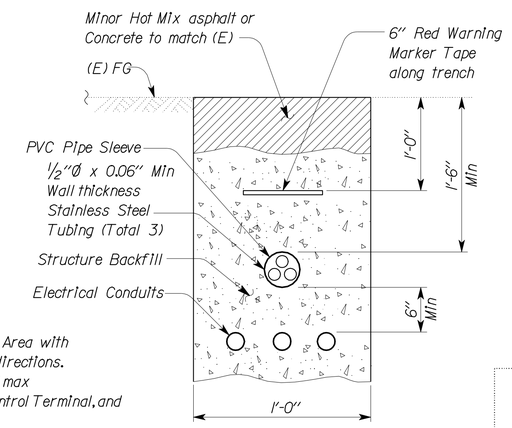

2 PIPE TRENCH

NO SCALE

NO SMOKING.
FLAMMABLE GAS.

3 WARNING SIGN

NO SCALE

A. STOP MOTOR.
B. NO SMOKING.
C. FLAMMABLE GAS.
D. NATURAL GAS VEHICLE FUEL CYLINDERS SHALL BE PERIODICALLY INSPECTED (NORMALLY EVERY 3 YEARS) TO ENSURE SAFE OPERATION OF THE VEHICLE. CONTACT VEHICLE OR CYLINDER MANUFACTURER.

4 WARNING SIGN

NO SCALE

Fire Marshal Stamp

CALIFORNIA STATE FIRE MARSHAL APPROVED

Approval of this plan does not authorize or approve any omission or deviation from applicable regulations. Final approval is subject to field inspection. One set of approved plans shall be available on the project site at all times.

Reviewed by: FRANCIS SOLICH
Date: 4/30/12

ACCESSIBILITY DESIGN APPROVAL STAMP DOT / DES / OTA

PROJECT ID 0800000454

Reviewed by: YA WANG
Date: 4/27/12

THIS DRAWING ACCURATE FOR MECHANICAL WORK ONLY

	BY	CHECKED
DESIGN	Mark Hedglin	Tom Hatam
DETAILS	Rudy Sarte	Mark Hedglin
QUANTITIES	Mark Hedglin	Tom Hatam

STATE OF CALIFORNIA DEPARTMENT OF TRANSPORTATION

DIVISION OF ENGINEERING SERVICES
ELECTRICAL-MECHANICAL-WATER AND WASTEWATER DESIGN

BRIDGE No.
POST MILE

MAGANA-ORTEGA MS

CNG EQUIPMENT LAYOUT

SHEET **M-2**

DS OSD 2139A (4/89)
FILE NO.:
FILE => m_2.dgn
DATE PLOTTED => 16-JAN-2013 TIME PLOTTED => 05:35

ORIGINAL SCALE IN INCHES FOR REDUCED PLANS 0 1 2 3

UNIT 3580
PROJECT NUMBER & PHASE 08000004541
EA 08-0M0204

DISREGARD PRINTS BEARING EARLIER REVISION DATES
REVISION DATES (PRELIMINARY STAGE ONLY) 05-05-10 06-02-10 06-30-10 07-28-10 08-25-10 09-22-10 11-8-10 12-08-10 12-04-12
SHEET OF

USERNAME => s121614 DATE PLOTTED => 16-JAN-2013 TIME PLOTTED => 05:35

V=1

Dist	COUNTY	LOCATION CODE	POST MILES TOTAL PROJECT	SHEET No.	TOTAL SHEETS
08	SBd	5712		10	22

REGISTERED ENGINEER-MECHANICAL 5-7-12

REGISTERED PROFESSIONAL ENGINEER MARK HEDGLIN No. M32912 Exp. 9-30-14 MECH STATE OF CALIFORNIA

12-24-12
PLANS APPROVAL DATE

The State of California or its officers or agents shall not be responsible for the accuracy or completeness of scanned copies of this plan sheet.

Fire Marshal Stamp

CALIFORNIA STATE FIRE MARSHAL APPROVED

Approval of this plan does not authorize or approve any omission or deviation from applicable regulations. Final approval is subject to field inspection. One set of approved plans shall be available on the project site at all times.

Reviewed by: FRANCIS SOLICH

Date: 4/30/12

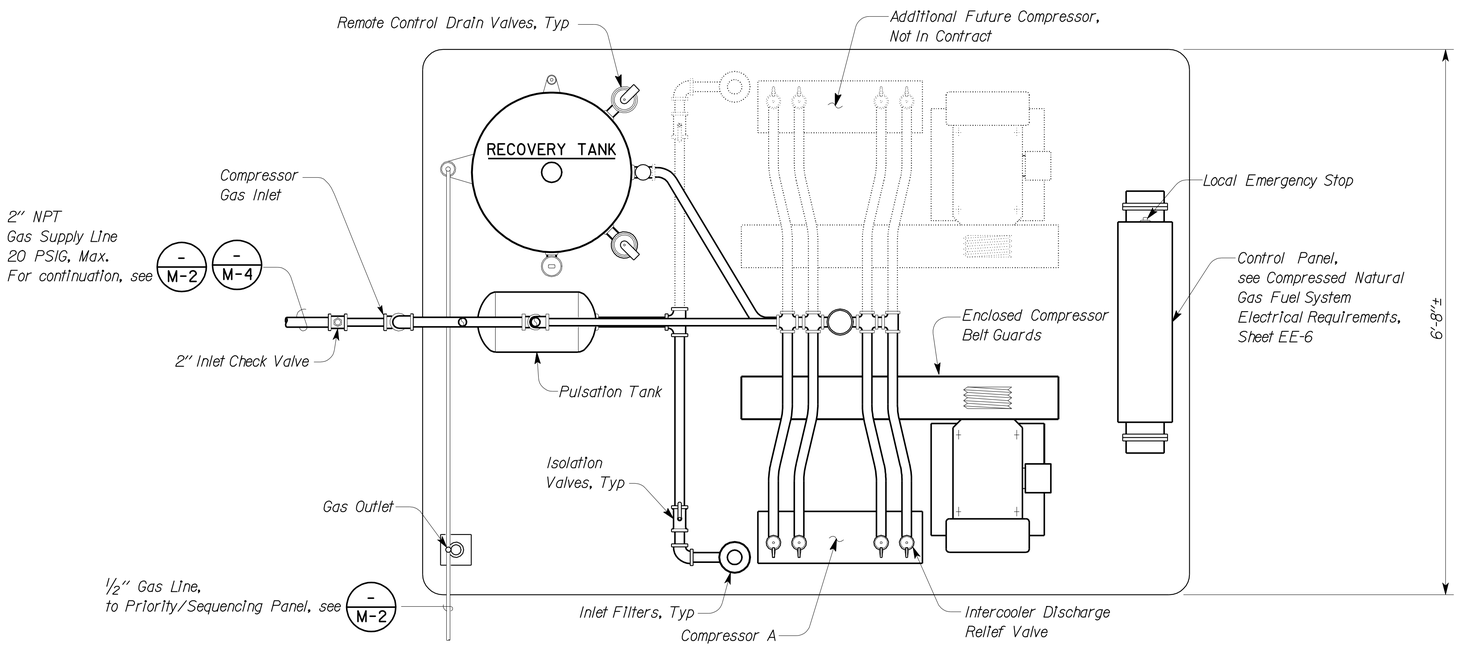

A

PLAN

NO SCALE

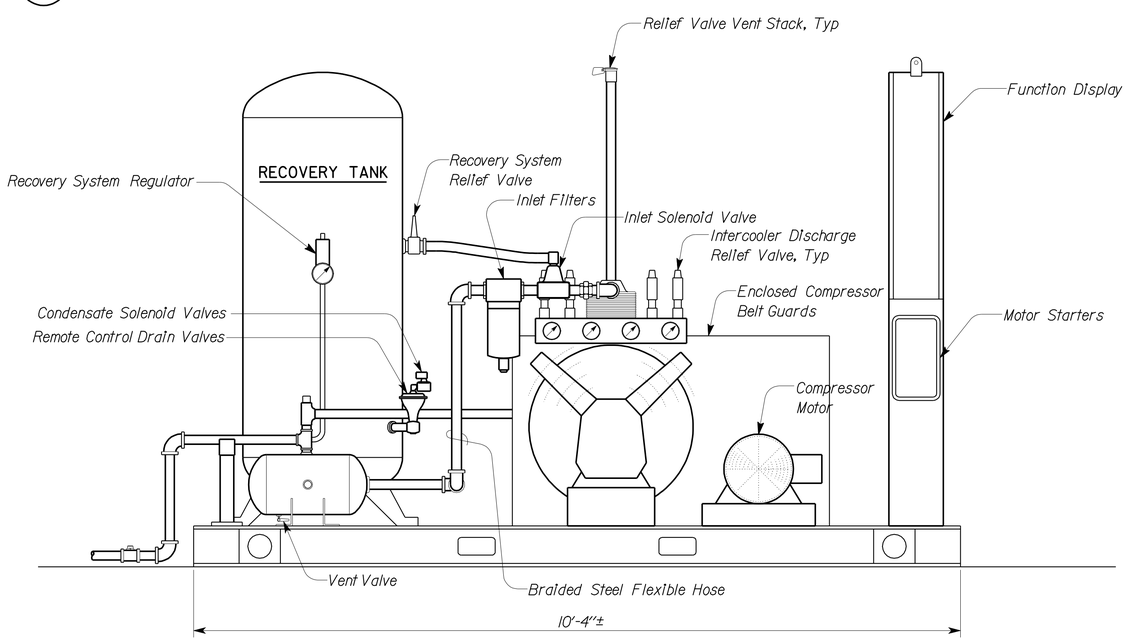

A **ELEVATION**

NO SCALE

THIS DRAWING ACCURATE FOR MECHANICAL WORK ONLY

	BY	CHECKED
DESIGN	Mark Hedglin	Tom Hatam
DETAILS	Rudy Sarte	Mark Hedglin
QUANTITIES	Mark Hedglin	Tom Hatam

STATE OF CALIFORNIA DEPARTMENT OF TRANSPORTATION

DIVISION OF ENGINEERING SERVICES ELECTRICAL-MECHANICAL-WATER AND WASTEWATER DESIGN

BRIDGE No.

POST MILE

MAGANA-ORTEGA MS

COMPRESSOR DETAILS

SHEET **M-3**

DS OSD 2139A (4/89)
FILE NO.:

FILE => m_3.dgn
DATE PLOTTED => 16-JAN-2013 TIME PLOTTED => 05:35

ORIGINAL SCALE IN INCHES FOR REDUCED PLANS 0 1 2 3

UNIT 3580
PROJECT NUMBER & PHASE 08000004541

EA 08-0M0204

DISREGARD PRINTS BEARING EARLIER REVISION DATES

REVISION DATES (PRELIMINARY STAGE ONLY) 05-05-10 06-02-10 06-30-10 07-28-10 08-25-10 09-22-10 11-18-10 12-08-10 3-15-12 12-4-12

SHEET OF

USERNAME => s121614 DATE PLOTTED => 16-JAN-2013 TIME PLOTTED => 05:35

VI=I

Dist	COUNTY	LOCATION CODE	POST MILES TOTAL PROJECT	SHEET No.	TOTAL SHEETS
08	SBd	5712		11	22

REGISTERED ENGINEER-MECHANICAL 5-7-12

REGISTERED PROFESSIONAL ENGINEER MARK HEDGLIN No. M32912 Exp. 9-30-14 MECH STATE OF CALIFORNIA

12-24-12
PLANS APPROVAL DATE

The State of California or its officers or agents shall not be responsible for the accuracy or completeness of scanned copies of this plan sheet.

Fire Marshal Stamp

CALIFORNIA STATE FIRE MARSHAL APPROVED

Approval of this plan does not authorize or approve any omission or deviation from applicable regulations. Final approval is subject to field inspection. One set of approved plans shall be available on the project site at all times.

Reviewed by: FRANCIS SOLICH

Date: 4/30/12

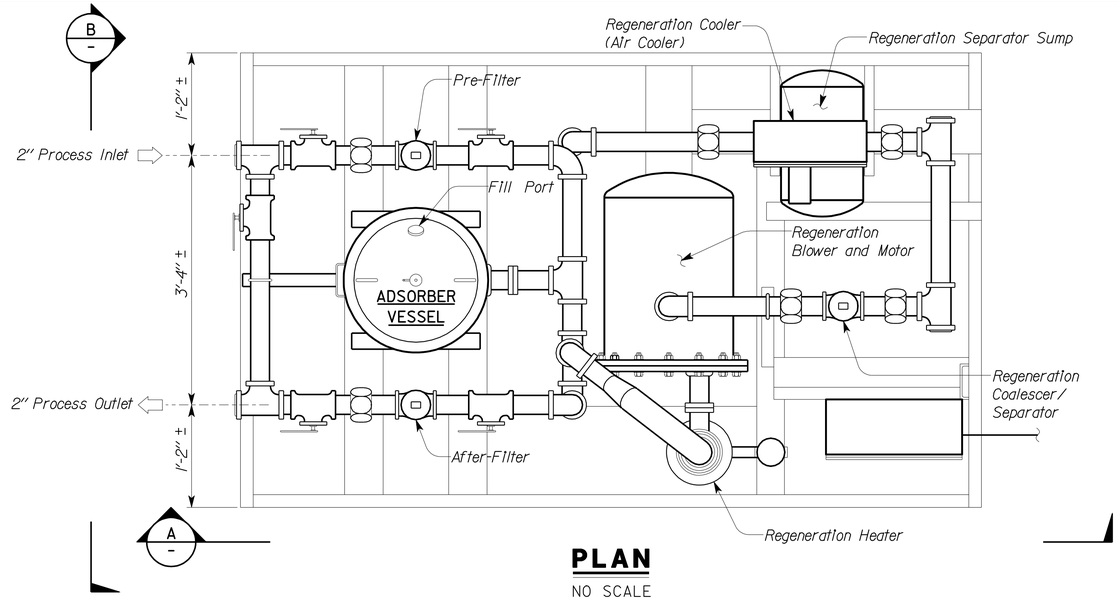

PLAN
NO SCALE

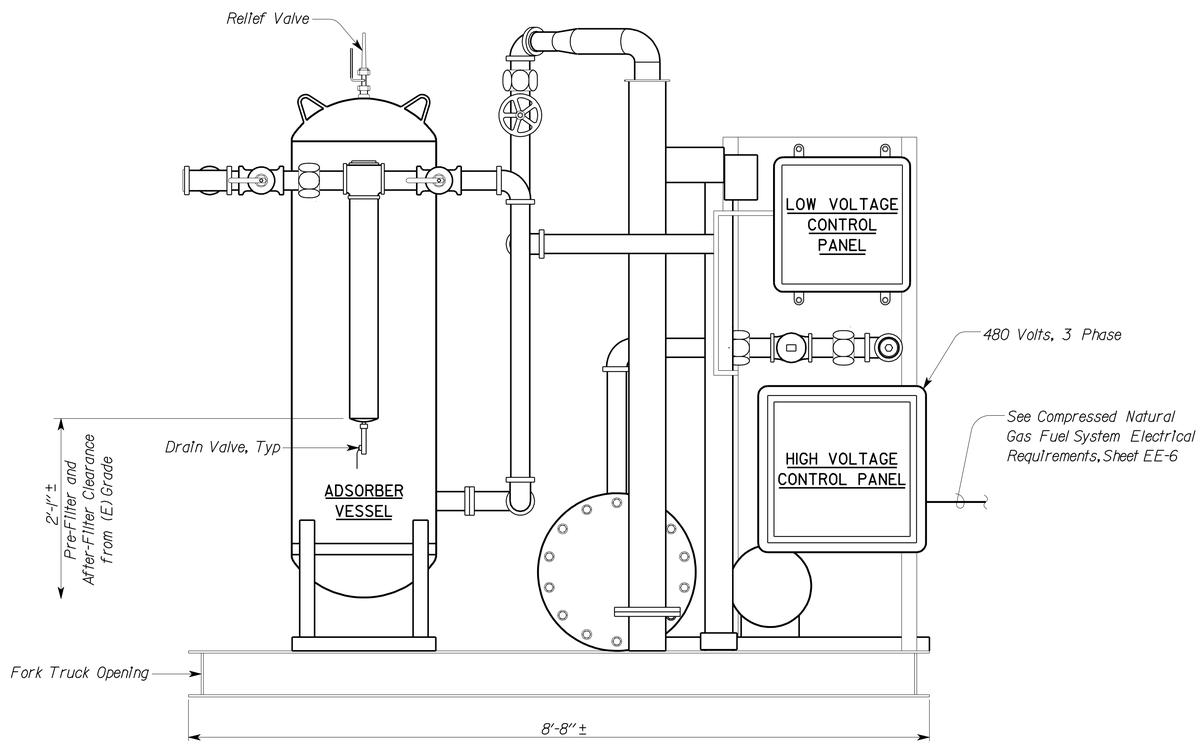

A ELEVATION
NO SCALE

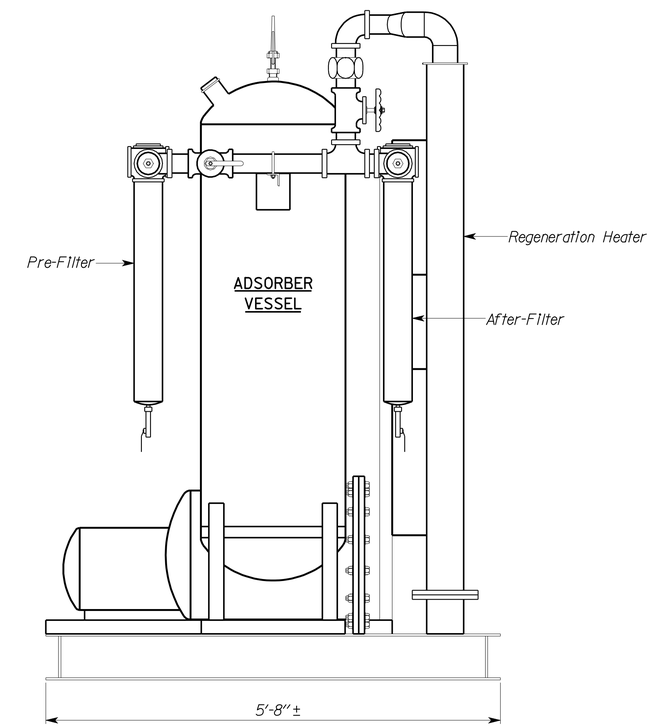

B ELEVATION
NO SCALE

THIS DRAWING ACCURATE FOR MECHANICAL WORK ONLY

DESIGN	BY Mark Hedglin	CHECKED Tom Hatam	
DETAILS	BY Rudy Sarte	CHECKED Mark Hedglin	
QUANTITIES	BY Mark Hedglin	CHECKED Tom Hatam	

STATE OF CALIFORNIA DEPARTMENT OF TRANSPORTATION

DIVISION OF ENGINEERING SERVICES
ELECTRICAL-MECHANICAL-WATER AND WASTEWATER DESIGN

BRIDGE No.
POST MILE

MAGANA-ORTEGA MS

GAS DRYER DETAILS

SHEET **M-4**

DS OSD 2139A (4/89)
FILE NO.:
FILE => m_4.dgn
DATE PLOTTED => 16-JAN-2013 TIME PLOTTED => 05:36

ORIGINAL SCALE IN INCHES FOR REDUCED PLANS 0 1 2 3

UNIT 3580
PROJECT NUMBER & PHASE 08000004541

DISREGARD PRINTS BEARING EARLIER REVISION DATES

REVISION DATES (PRELIMINARY STAGE ONLY) 05-05-10 06-02-10 06-30-10 07-28-10 08-25-10 09-22-10 11-18-10 12-08-10 3-15-12 12-4-12

SHEET OF

EA 08-0M0204

USERNAME => s121614 DATE PLOTTED => 16-JAN-2013 TIME PLOTTED => 05:36

VI=1

Dist	COUNTY	LOCATION CODE	POST MILES TOTAL PROJECT	SHEET No.	TOTAL SHEETS
08	SBd	5712		12	22

REGISTERED ENGINEER-MECHANICAL 5-7-12

REGISTERED PROFESSIONAL ENGINEER
MARK HEDGLIN
No. M32912
Exp. 9-30-14
MECH
STATE OF CALIFORNIA

12-24-12
PLANS APPROVAL DATE

The State of California or its officers or agents shall not be responsible for the accuracy or completeness of scanned copies of this plan sheet.

Fire Marshal Stamp

CALIFORNIA STATE FIRE MARSHAL APPROVED

Approval of this plan does not authorize or approve any omission or deviation from applicable regulations. Final approval is subject to field inspection. One set of approved plans shall be available on the project site at all times.

Reviewed by: FRANCIS SOLICH

Date: 4/30/12

NOTE:

Fuel Dispenser shall be constructed specifically to dispense CNG fuel. All internal components and seals shall be compatible with CNG.

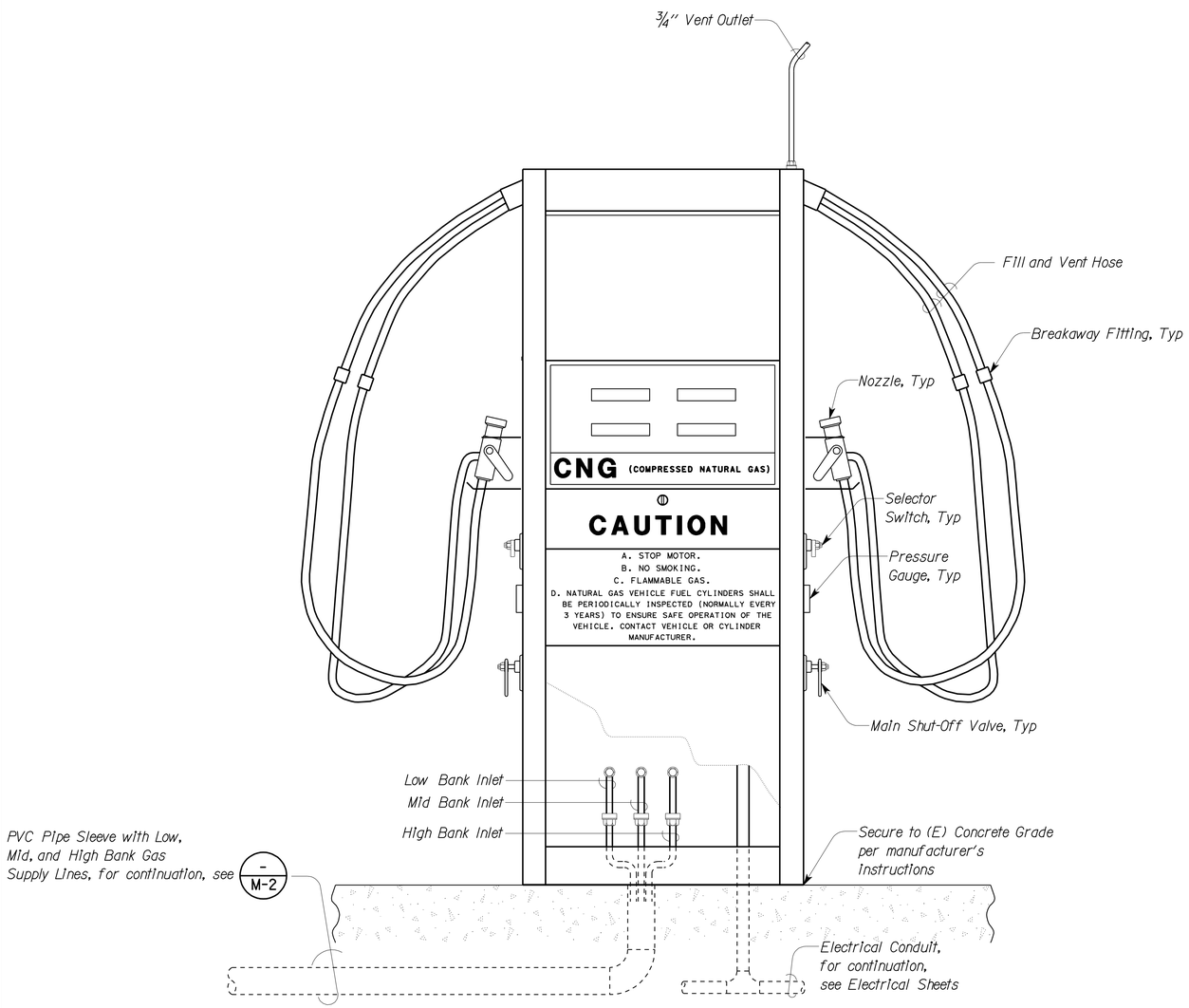

ELEVATION

1 CNG QUICK FILL FUEL DISPENSER

NO SCALE

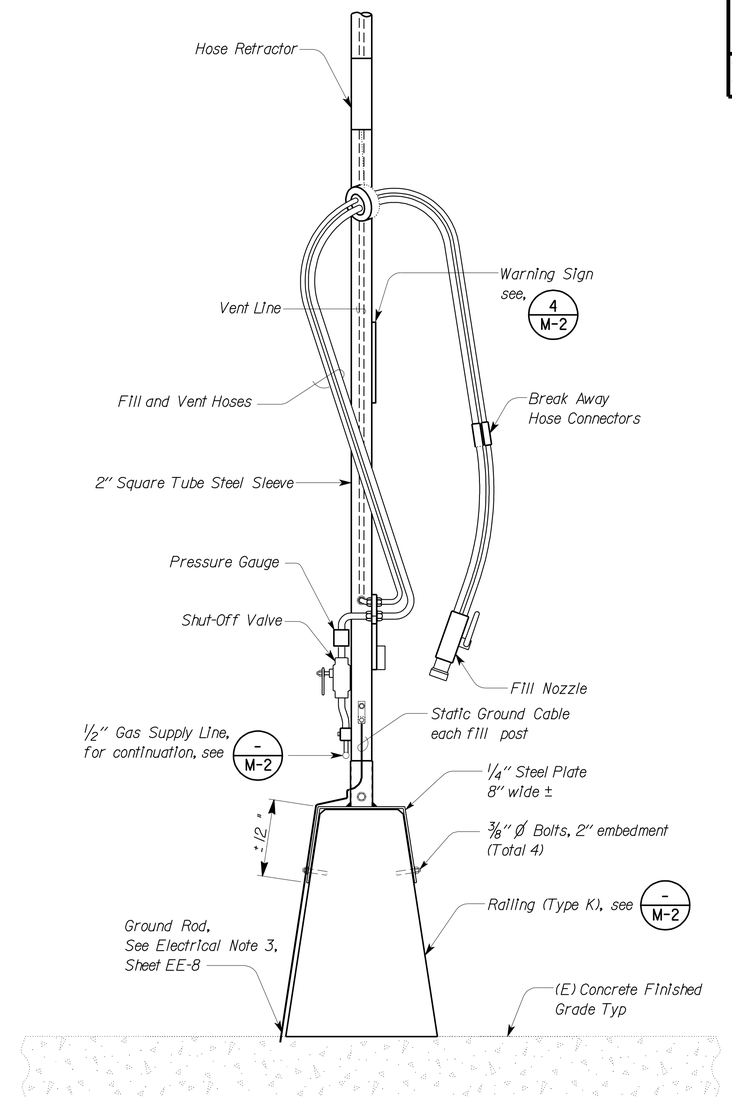

ELEVATION

2 CNG TIME FILL FUEL DISPENSER

NO SCALE

THIS DRAWING ACCURATE FOR MECHANICAL WORK ONLY

	BY	CHECKED
DESIGN	Mark Hedglin	Tom Hatam
DETAILS	Rudy Sarte	Mark Hedglin
QUANTITIES	Mark Hedglin	Tom Hatam

STATE OF CALIFORNIA
DEPARTMENT OF TRANSPORTATION

DIVISION OF ENGINEERING SERVICES
ELECTRICAL-MECHANICAL-WATER AND WASTEWATER DESIGN

BRIDGE No.
POST MILE

MAGANA-ORTEGA MS

MECHANICAL DETAILS NO. 1

SHEET **M-5**

DS OSD 2139A (4/89)
FILE NO.:
FILE => m_5.dgn
DATE PLOTTED => 16-JAN-2013 TIME PLOTTED => 05:36

ORIGINAL SCALE IN INCHES FOR REDUCED PLANS 0 1 2 3

UNIT 3580
PROJECT NUMBER & PHASE 08000004541
EA 08-0M0204

DISREGARD PRINTS BEARING EARLIER REVISION DATES

REVISION DATES (PRELIMINARY STAGE ONLY): 05-05-10 06-02-10 06-30-10 07-28-10 08-25-10 09-22-10 11-18-10 12-08-10 3-15-12 12-4-12

SHEET OF

USERNAME => s121614 DATE PLOTTED => 16-JAN-2013 TIME PLOTTED => 05:36

V|=|

Dist	COUNTY	LOCATION CODE	POST MILES TOTAL PROJECT	SHEET No.	TOTAL SHEETS
08	SBd	5712		13	22

REGISTERED ENGINEER-MECHANICAL 5-7-12

REGISTERED PROFESSIONAL ENGINEER MARK HEDGLIN No. M32912 Exp. 9-30-14 MECH STATE OF CALIFORNIA

PLANS APPROVAL DATE

The State of California or its officers or agents shall not be responsible for the accuracy or completeness of scanned copies of this plan sheet.

Fire Marshal Stamp

CALIFORNIA STATE FIRE MARSHAL APPROVED

Approval of this plan does not authorize or approve any omission or deviation from applicable regulations. Final approval is subject to field inspection. One set of approved plans shall be available on the project site at all times.

Reviewed by: FRANCIS SOLICH

Date: 4/30/12

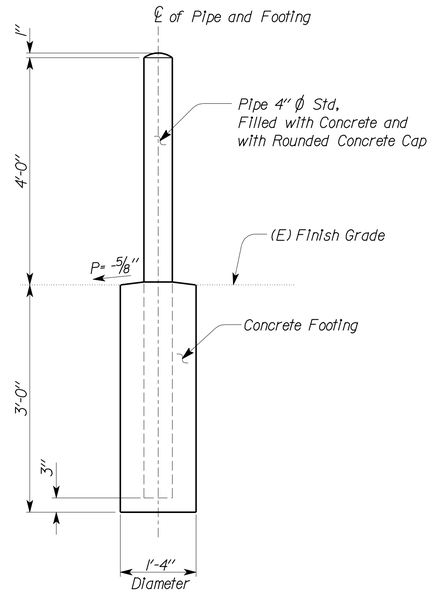

1 GUARD POST DETAIL

NO SCALE

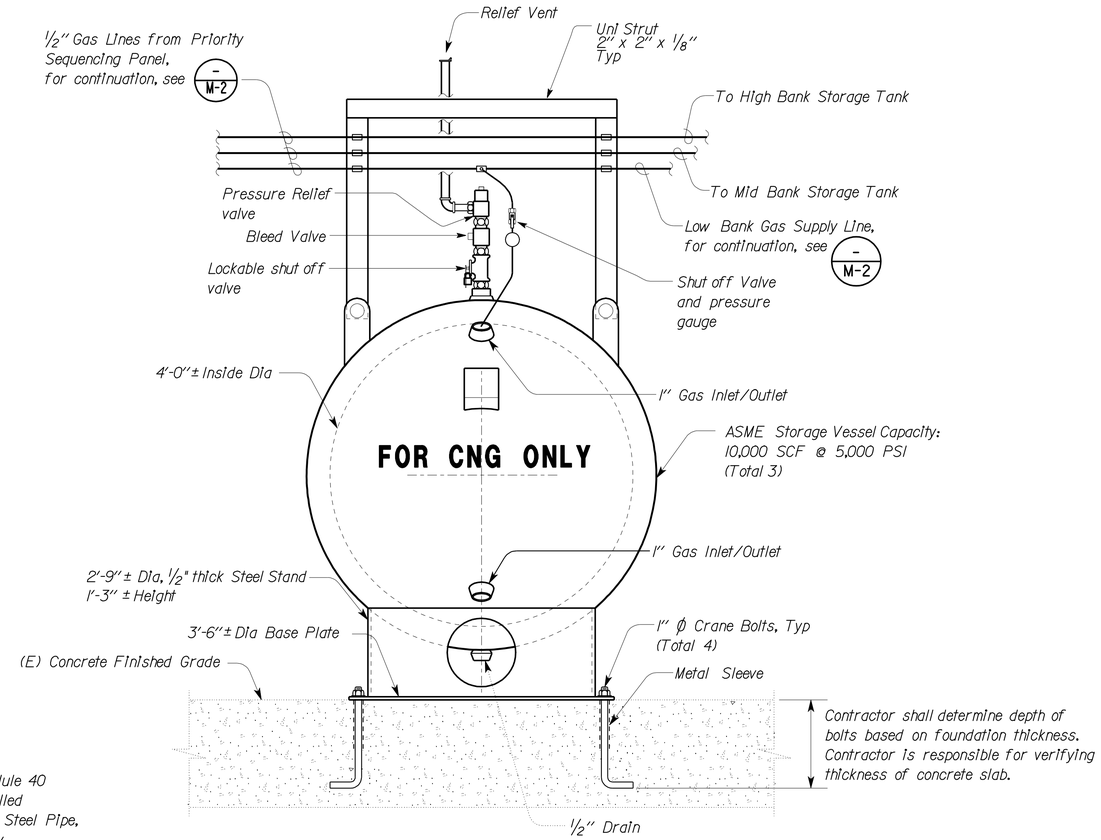

2 CNG STORAGE VESSEL

NO SCALE

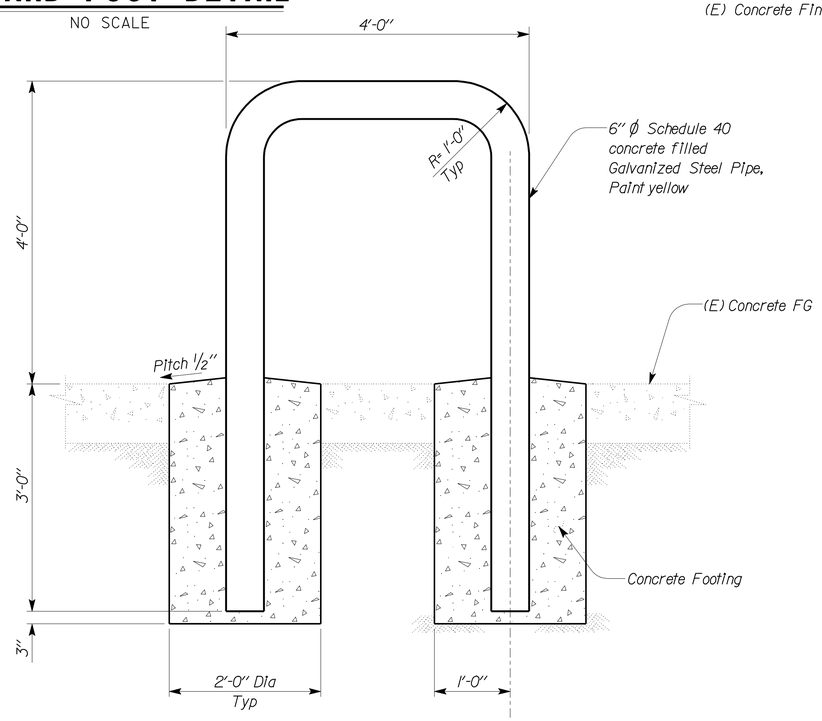

3 GUARD POST

NO SCALE

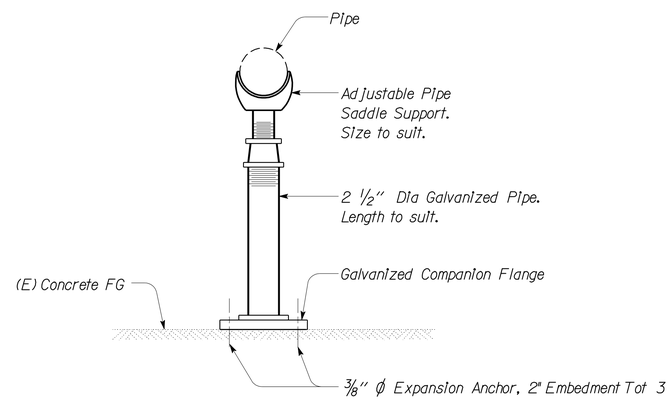

4 PIPE SUPPORT DETAIL

NO SCALE

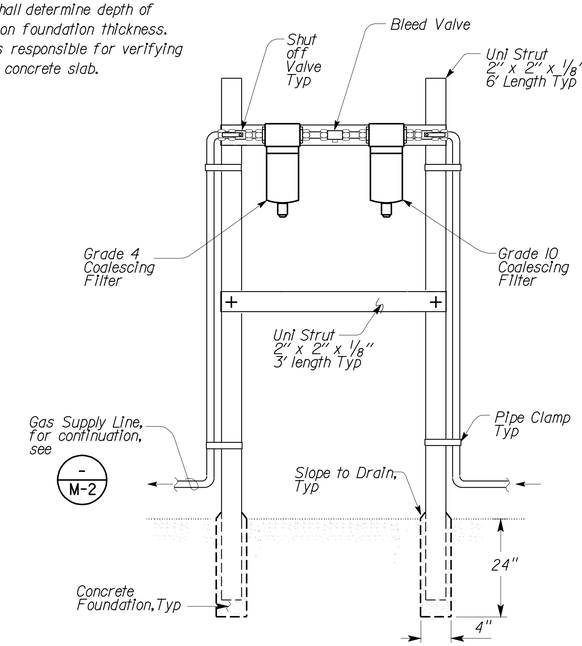

5 COALESCING FILTER RACK

NO SCALE

THIS DRAWING ACCURATE FOR MECHANICAL WORK ONLY

	BY	CHECKED
DESIGN	Mark Hedglin	Tom Hatam
DETAILS	Rudy Sarte	Mark Hedglin
QUANTITIES	Mark Hedglin	Tom Hatam

STATE OF CALIFORNIA DEPARTMENT OF TRANSPORTATION

DIVISION OF ENGINEERING SERVICES ELECTRICAL-MECHANICAL-WATER AND WASTEWATER DESIGN

BRIDGE No. | POST MILE

MAGANA-ORTEGA MS

MECHANICAL DETAILS NO. 2

SHEET **M-6**

DS OSD 2139A (4/89)
FILE NO.:

FILE => m_6.dgn
DATE PLOTTED => 16-JAN-2013 TIME PLOTTED => 05:36

ORIGINAL SCALE IN INCHES FOR REDUCED PLANS 0 1 2 3

UNIT 3580
PROJECT NUMBER & PHASE 08000004541

DISREGARD PRINTS BEARING EARLIER REVISION DATES

REVISION DATES (PRELIMINARY STAGE ONLY) 05-05-10 06-02-10 06-30-10 07-28-10 08-25-10 09-22-10 11-18-10 12-08-10 3-15-12 12-4-12

SHEET OF

EA 08-0M0204

USERNAME => s12614 DATE PLOTTED => 16-JAN-2013 TIME PLOTTED => 05:36

VI=1

Dist	COUNTY	LOCATION CODE	POST MILES TOTAL PROJECT	SHEET No.	TOTAL SHEETS
08	SBd	5712		14	22

REGISTERED ELECTRICAL ENGINEER — 06-04-12 DATE

REGISTERED PROFESSIONAL ENGINEER J. ABDELSAYED No. 18915 Exp. 12-31-13 ELEC STATE OF CALIFORNIA

12-24-12
PLANS APPROVAL DATE

The State of California or its officers or agents shall not be responsible for the accuracy or completeness of scanned copies of this plan sheet.

GRAPHIC SYMBOLS FOR ELECTRICAL WIRING AND LAYOUT DIAGRAMS

SYMBOL	DESCRIPTION
	POLE-TOP ELECTROLIER
	POLE-ARM ELECTROLIER
CEILING WALL	
(S) (S)	SURFACE FLUORESCENT, METAL HALIDE OR SODIUM VAPOR FIXTURE
(R) (R)	RECESSED FLUORESCENT, METAL HALIDE, OR SODIUM VAPOR FIXTURE
(X) (X)	EXIT LIGHT
	SURFACE OR PENDANT INDIVIDUAL FLUORESCENT FIXTURE
(R)	RECESSED INDIVIDUAL FLUORESCENT FIXTURE
	SURFACE OR PENDANT CONTINUOUS ROW FLUORESCENT FIXTURES

NOTE: A LOWER CASE LETTER NEAR GRAPHIC LIGHTING FIXTURE SYMBOL DENOTES THAT FIXTURE IS CONTROLLED BY A SIMILARLY MARKED SWITCH, AN ALPHA-NUMERIC SYMBOL NEAR GRAPHIC LIGHTING FIXTURE SYMBOL DENOTES FIXTURE TYPE, (I=INCANDESCENT, F=FLUORESCENT, MH=METAL HALIDE, H=HIGH PRESSURE SODIUM VAPOR), DESIGN TYPE, NUMBER OF LAMPS AND WATTAGE.

EXAMPLE : (4) F 2 - 2 x 32
- 32 WATT LAMPS
- 2 LAMPS
- DESIGN TYPE
- FLUORESCENT
- NUMBER OF FIXTURES

SYMBOL	DESCRIPTION
(B) (B)	BLANK OUTLET
(J) (J)	JUNCTION BOX
(D)	DROP CORD
	SINGLE RECEPTACLE OUTLET
	DUPLEX RECEPTACLE OUTLET
(GFCI)	DUPLEX RECEPTACLE OUTLET (WITH GFCI)
(GFCI) WP	DUPLEX RECEPTACLE OUTLET, WEATHERPROOF (WITH GFCI)
	SINGLE, SPECIAL PURPOSE RECEPTACLE OUTLET
	DUPLEX, SPECIAL PURPOSE RECEPTACLE OUTLET
R	RANGE OUTLET
(C)	CLOCK HANGER RECEPTACLE
(F)	FAN HANGER RECEPTACLE
	FLOOR SINGLE RECEPTACLE OUTLET
	FLOOR DUPLEX RECEPTACLE OUTLET
	FLOOR SPECIAL PURPOSE OUTLET
	FLOOR RADIO OUTLET
	FLOOR TELEPHONE OUTLET
	MULTI-FLOOR OUTLET, 2 OR MORE GANG
	MULTI-OUTLET ASSEMBLY
S	SINGLE POLE SWITCH
S_2	DOUBLE POLE SWITCH
S_3	THREE WAY SWITCH
S_4	FOUR WAY SWITCH
S_D	AUTOMATIC DOOR
S_K	KEY OPERATED SWITCH
S_P	SWITCH AND PILOT LIGHT
S_{MC}	MOMENTARY CONTACT SWITCH
S_{RC}	REMOTE CONTROL SWITCH
S_{WP}	WEATHERPROOF SWITCH
S_F	FAN SWITCH
S_L	LIGHT SWITCH
S_H	HEATER SWITCH
S_{VS}	VARIABLE SPEED MOTOR CONTROL SWITCH
S_{CHLF}	TWO SWITCHES, ONE SWITCH FOR LIGHT AND FAN AND TIMER SWITCH FOR HEAT LAMP

SYMBOL	DESCRIPTION
S^{O}_{1}	OCCUPANCY SENSOR WALL SWITCH, SINGLE LEVEL
S^{O}_{2}	OCCUPANCY SENSOR WALL SWITCH, BILEVEL
S_M	MOTION SENSOR SWITCH
S_T	MANUAL MOTOR STARTING SWITCH, THERMAL OVERLOAD TYPE
S_{HP}	MANUAL MOTOR STARTING SWITCH, WITHOUT OVERLOAD ELEMENT
Ts	TIMER SWITCH
S_S	SWITCH AND SINGLE RECEPTACLE
S_S	SWITCH AND DUPLEX RECEPTACLE
C	HAND DRYER NOZZLE
H	HAND DRYER
	RADIO OUTLET
	TELEPHONE OUTLET
	SOUND SYSTEM LOUD SPEAKER OUTLET
	PUSHBUTTON
L	PUSHBUTTON STATION, NC, WITH LOCKING DEVICE FOR OPEN
	PUSHBUTTON STATION MOTOR CONTROL
	BUZZER
	BELL
	COMBINATION BELL-BUZZER
(T)	THERMOSTAT
(PS)	PRESSURE SWITCH
(R)	CONTROL RELAY
(FS)	FLOW SWITCH
PEC	PHOTOELECTRIC CELL
R	RADIO OUTLET
TV	TELEVISION OUTLET
M	MICROPHONE OUTLET
	FLUSH-MOUNTED PANELBOARD AND CABINET
	SURFACE-MOUNTED PANELBOARD AND CABINET
	LIGHTING PANEL
	POWER PANEL
	COMBINATION LIGHTING AND POWER
MC	MOTOR CONTROLLER
	DISCONNECT SWITCH
	CONDUIT CONCEALED IN CEILING OR WALL
	CONDUIT CONCEALED IN FLOOR
	CONDUIT EXPOSED
	CROSS-LINES INDICATE NUMBER OF #12 AWG CONDUCTORS. LONGER CROSS-LINE INDICATES 1#12 AWG (G) FOR EQUIPMENT GROUNDING CONDUCTOR. NO CROSS-LINE INDICATES 2#12 WITH 1#12 (G) UNLESS OTHERWISE NOTED. ALL CONDUIT SHALL BE ½" UNLESS OTHERWISE NOTED.
A1, A2	HOMERUN TO PANELBOARD, ARROWS INDICATE NUMBER OF CIRCUITS, LETTER DENOTES PANEL-BOARD, NUMERAL DENOTES CIRCUIT.
SM	SURFACE METAL RACEWAY

(2) ½"C, PVC, 2#12
- CONDUCTOR INFO (PER CONDUIT)
- CONDUIT TYPE
- CONDUIT SIZE
- NUMBER OF CONDUITS (NO NUMBER INDICATES ONE CONDUIT)

SYMBOL	DESCRIPTION
MC	CONDUIT, RIGID STEEL, UNDERGROUND
PVC	CONDUIT, POLYVINYL CHLORIDE, UNDERGROUND
	CONDUIT, FLEXIBLE
	CONDUIT, TURN UP
	CONDUIT, TURN DOWN
	CONDUIT SEAL, EXPLOSION-PROOF
X	CONDUIT, EXPANSION JOINT
	ADAPTER, ONE TYPE CONDUIT TO ANOTHER
	POLE

SYMBOL	DESCRIPTION
(OC)	OCCUPANCY SENSOR
(H)	HEAT DETECTOR
(S)	SMOKE DETECTOR
(P)	MANUAL PULL STATION
(AV)	AUDIO/VISUAL ALARM DEVICE
(G)	GLASS BREAK DISCRIMINATOR
(C)	MAGNETIC CONTACT SWITCH-PEDESTRIAN DOOR
(C)	MAGNETIC CONTACT SWITCH-VEHICLE DOOR
(K)	KEYPAD FOR ALARM SYSTEM
(W)	COMBINATION DETECTOR (MICROWAVE/PASSIVE INFRARED)
	PULL BOX-LETTER INDICATES TYPE OF PULL BOX (E-ELECTRICAL, T-TELEPHONE, R-RADIO)
(T)	PULL BOX (TRAFFIC RATED)-LETTER INDICATES TYPE OF PULL BOX (E-ELECTRICAL, T-TELEPHONE, R-RADIO)
CHLF	COMBINATION HEAT, LIGHT AND FAN UNIT
A / EE-2	— SECTION/ELEVATION LETTER — SHEET NUMBER
I / EE-2	— DETAIL NUMBER — SHEET NUMBER

REMODEL WORK

SYMBOL	DESCRIPTION
	EXISTING FLUORESCENT FIXTURE-TO REMAIN
	EXISTING FLUORESCENT FIXTURE-REMOVE
	EXISTING INCANDESCENT FIXTURE-TO REMAIN
	EXISTING INCANDESCENT FIXTURE-REMOVE
	EXISTING OUTLET-TO REMAIN
	EXISTING RECEPTACLE OUTLET-TO REMAIN
	EXISTING RECEPTACLE OUTLET-REMOVE
—E—E—	EXISTING CONDUIT AND CONDUCTORS-TO REMAIN UNLESS OTHERWISE NOTED
—✱✱✱—	EXISTING CONDUIT AND CONDUCTORS-REMOVE
S	EXISTING SWITCH-TO REMAIN
	EXISTING SWITCH-REMOVE
(J)	EXISTING JUNCTION BOX-TO REMAIN
	EXISTING JUNCTION BOX-REMOVE

STANDARD NOTES

AB	ABANDON, IF APPLIED TO CONDUIT, REMOVE CONDUCTORS.
BC	INSTALL PULL BOX IN EXISTING CONDUIT RUN.
CB	INSTALL CONDUIT INTO EXISTING PULL BOX.
CC	CONNECT NEW AND EXISTING CONDUIT. REMOVE EXISTING CONDUCTORS AND INSTALL CONDUCTORS AS INDICATED.
CF	CONDUIT TO REMAIN FOR FUTURE USE. REMOVE CONDUCTORS, INSTALL PULL ROPE AND PLUG.
FA	REMOVE FOUNDATION ABOVE GRADE AND ABANDON FOUNDATION BELOW GRADE.
RL	RELOCATE EQUIPMENT.
RLD	RELOCATED EQUIPMENT.
SC	SPLICE NEW TO EXISTING CONDUCTORS.

STANDARD PLANS

DATED MAY, 2006

GRAPHIC SYMBOLS FOR ELECTRICAL DIAGRAMS

SYMBOL	DESCRIPTION
	CIRCUIT BREAKER, SINGLE POLE
	CIRCUIT BREAKER, DOUBLE POLE
	CIRCUIT BREAKER, THREE POLE
GFCI	CIRCUIT BREAKER, WITH GROUND FAULT CIRCUIT INTERRUPTER
	CONTACT, NORMALLY OPEN
	CONTACT, NORMALLY CLOSED
	CONTACT, NORMALLY CLOSED, TIME DELAY CLOSING ON DE-ENERGIZING
	CONTACT, NORMALLY OPEN, TIME DELAY OPENING ON DE-ENERGIZING
	CONTACT, NORMALLY OPEN, TIME DELAY CLOSING ON ENERGIZING
	CONTACT, NORMALLY CLOSED, TIME DELAY OPENING ON ENERGIZING
	CONTACT, SINGLE POLE DOUBLE-THROW
	OPERATING COIL
	LIQUID LEVEL ACTUATED SWITCH, NORMALLY CLOSED
	LIQUID LEVEL ACTUATED SWITCH, NORMALLY OPEN
	PRESSURE ACTUATED SWITCH, NORMALLY CLOSED
	PRESSURE ACTUATED SWITCH, NORMALLY OPEN
	FLOW ACTUATED SWITCH, NORMALLY CLOSED
	FLOW ACTUATED SWITCH, NORMALLY OPEN
	TEMPERATURE ACTUATED SWITCH, NORMALLY CLOSED
	TEMPERATURE ACTUATED SWITCH, NORMALLY OPEN
	LIMIT SWITCH, NORMALLY CLOSED
	LIMIT SWITCH, NORMALLY OPEN
	PUSHBUTTON SWITCH, NORMALLY CLOSED
	PUSHBUTTON SWITCH, NORMALLY OPEN
	SWITCH, SINGLE-POLE
	SWITCH, SINGLE-POLE, DOUBLE-THROW
	SWITCH, DOUBLE-POLE
	SWITCH, DOUBLE-POLE, DOUBLE-THROW
	SWITCH, SINGLE-POLE, 3-POSITION
	THERMAL OVERLOAD
	FUSE
	RESISTOR
	VARIABLE RESISTOR
	TRANSFORMER WINDING
	GROUNDING ELECTRODE
	ENCLOSURE BOND
(A)	PILOT LIGHT (A=AMBER, G=GREEN, R=RED)
(G)	GENERATOR
(M)	MOTOR
(F)	FAN MOTOR

PROJECT NOTES

A. SEPARATE GROUNDED (NEUTRAL) CONDUCTOR SHALL BE USED FOR EACH 120-VOLT CIRCUIT.

B. HOMERUNS TO PANELBOARDS SHALL BE INSTALLED AS SHOWN ON THE PLANS. HOMERUNS SHALL NOT BE COMBINED.

C. A SINGLE INSULATED EQUIPMENT GROUNDING CONDUCTOR (SIZED AS REQUIRED) SHALL BE INSTALLED IN EACH CONDUIT RUN.

CALIFORNIA STATE FIRE MARSHAL APPROVED

Approval of this plan does not authorize or approve any omission or deviation from applicable regulations. Final approvals subject to field inspection. One set of approved plans shall be available on the project site at all times.

Reviewed by: FRANCIS SOLICH

Approval date: 4/30/12

ABBREVIATIONS

A	AMPERES
A/C	AIR CONDITIONING UNIT
ACS	AIR COMPRESSOR STARTER
AI	ANALOG INPUT
AL	ALARM LIGHT
AO	ANALOG OUTPUT
ATS	AUTOMATIC TRANSFER SWITCH
AVC	AIR VOLUME CONTROLLER
BD	BUILDING DISCONNECT
BLDG	BUILDING
BRK	BREAKER
C	CONDUIT
CB	CIRCUIT BREAKER
CKT	CIRCUIT
CNG	COMPRESSED NATURAL GAS
CR	CONTROL RELAY
CSW	CURRENT SWITCH
DI	DIGITAL INPUT
DO	DIGITAL OUTPUT
DP	DUPLEX PLUG RECEPTACLE
DS	DOOR SWITCH
(E)	EXISTING
EF	EXHAUST FAN
F	FUSE
FL	FAILURE LIGHT
FLA	FLASHER
FLEX	FLEXIBLE CONDUIT
FLS	FLOW SWITCH
FR	FAILURE RESET
FS	FLOAT SWITCH
G	GROUND
GFCI	GROUND FAULT CIRCUIT INTERRUPTER
GRS	GALVANIZED RIGID STEEL
IR	INDUCTION RELAY
JB	JUNCTION BOX
L	LIGHT
LC	LIGHTING CONTACTOR
LCP	LIGHTING CONTROL PANEL
LD	LIGHT DISCONNECT
LL	LIQUID LEVEL RELAY
LLC	LIQUID LEVEL CONTROLLER
LP	LIGHT PANEL
LS	LIGHT SWITCH
LT	LIGHT TRANSFORMER
LTO	LIGHT TRANSFORMER OVERLOAD
MB	MAIN BREAKER
MC	METALLIC CONDUIT
MCP	MOTOR CIRCUIT PROTECTOR
MCC	MOTOR CONTROL CENTER
MSB	MAIN SWITCHBOARD
MT	EMPTY CONDUIT
(N)	NEW
NC	NORMALLY CLOSED
NO	NORMALLY OPEN
NSW	NEUTRAL SWITCHING BREAKER
OL	OVERLOAD
P	POLE
PB	PULL BOX
PB	PUSH BUTTON
PFR	PHASE FAILURE RELAY
PFRD	PHASE FAILURE RELAY DISCONNECT
PEC	PHOTOELECTRIC CELL
PL	PILOT LIGHT
PS	PRESSURE SWITCH
PTS	POWER TRANSFER SWITCH
PVC	POLYVINYL CHLORIDE
RES	RESISTOR
RTB	RADIO TERMINAL BOARD
S	STARTER COIL
SD	SERVICE DISCONNECT
SFR	SEAL FAILURE RELAY
SL	SUMP LIGHT
SPR	STANDBY POWER RECEPTACLE
SS	SELECTOR SWITCH
ST	STARTER
SV	SOLENOID VALVE
T	TRANSFORMER
TB	TERMINAL BLOCK
TDR	TIME DELAY RELAY
TGLS	TOGGLE SWITCH
TM	TIME METER
TOT	TOTAL
TS	TIMER SWITCH
TSW	TEST SWITCH
TTB	TELEPHONE TERMINAL BOARD
TYP	TYPICAL
UPS	UNINTERRUPTIBLE POWER SUPPLY
WLS	WATER LEVEL SWITCH
WP	WEATHERPROOF

	BY	CHECKED
DESIGN	Joseph Abdelsayed	J.S. Sandhu
DETAILS	Joseph Abdelsayed	J.S. Sandhu
QUANTITIES	Joseph Abdelsayed	J.S. Sandhu

STATE OF CALIFORNIA DEPARTMENT OF TRANSPORTATION

DIVISION OF ENGINEERING SERVICES
ELECTRICAL-MECHANICAL-WATER AND WASTEWATER DESIGN

BRIDGE No.
POST MILE

MAGANA-ORTEGA MS

LEGEND

SHEET EE-0

DOES SD Imperial Rev. 9/02

ORIGINAL SCALE IN INCHES FOR REDUCED PLANS 0 1 2 3

UNIT 3596
PROJECT NUMBER & PHASE 08000004541
EA 08-0M0204

DISREGARD PRINTS BEARING EARLIER REVISION DATES → REVISION DATES (PRELIMINARY STAGE ONLY) 8/5/10 12/16/10 05/01/12 6/4/12 12/4/12 SHEET OF

16-JAN-2013 05:36

ee_00.dgn

Dist	COUNTY	LOCATION CODE	POST MILES TOTAL PROJECT	SHEET No.	TOTAL SHEETS
08	SBd	5712		15	22

REGISTERED ELECTRICAL ENGINEER — 06-04-12 DATE

REGISTERED PROFESSIONAL ENGINEER J. ABDELSAYED No. 18915 Exp. 12-31-13 ELEC STATE OF CALIFORNIA

12-24-12
PLANS APPROVAL DATE

The State of California or its officers or agents shall not be responsible for the accuracy or completeness of scanned copies of this plan sheet.

CALIFORNIA STATE FIRE MARSHAL APPROVED
Approval of this plan does not authorize or approve any omission or deviation from applicable regulations. Final approval is subject to field inspection. One set of approved plans shall be available on the project site at all times.
Reviewed by: FRANCIS SOLICH
Approval date: 4/30/12

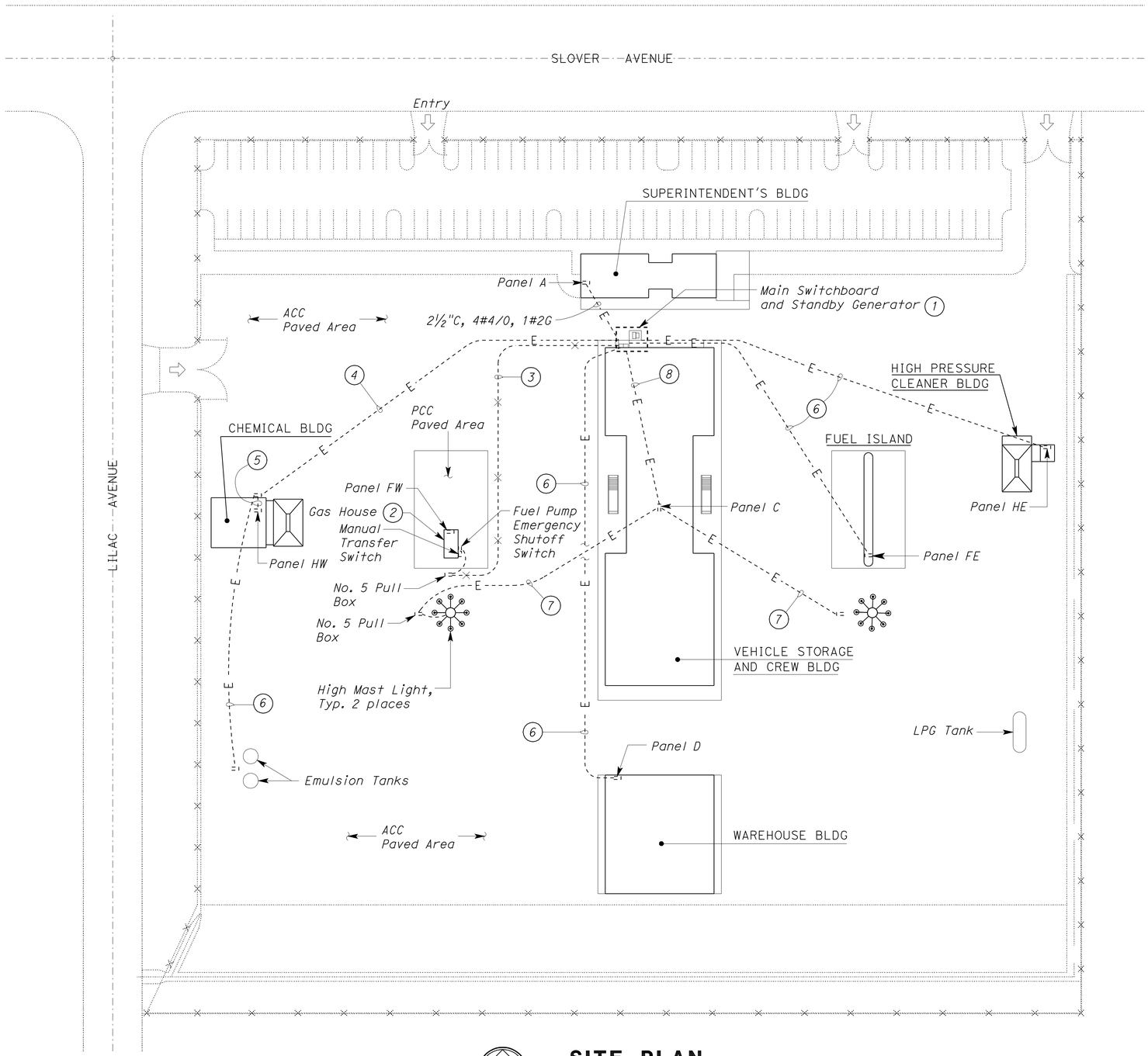

SITE PLAN

SCALE 1" = 40'-0"

Notes:

1. For enlarged plan view, see sheet EE-3.
2. For enlarged plan view, see sheet EE-5.
3. 1½"C, 4#1, 1#6G to Manual Transfer Switch. Remove conductors, abandon underground conduit. For continuation, see sheet EE-3.
4. (2) 1½"C, 4#1, 1#6G.
5. 1½"C, 4#1.
6. 1½"C, 4#1, 1#6G.
7. 1½"C, 18#10, 1#10G.
8. (2) 4"C, 4#600 MCM to Main Switchboard.

THIS DRAWING ACCURATE FOR ELECTRICAL WORK ONLY

DESIGN SUPERVISOR — DESIGN ENGINEER

	BY	CHECKED
DESIGN	Joseph Abdelsayed	J.S. Sandhu
DETAILS	Ed D. Tapalla 8/10	Joseph Abdelsayed
QUANTITIES	Joseph Abdelsayed	J.S. Sandhu

STATE OF CALIFORNIA DEPARTMENT OF TRANSPORTATION

DIVISION OF ENGINEERING SERVICES
ELECTRICAL-MECHANICAL-WATER AND WASTEWATER DESIGN

BRIDGE No. / POST MILE

MAGANA-ORTEGA MS

EXISTING SITE PLAN

SHEET **EE-1**

DOES SD Imperial Rev. 9/02

ORIGINAL SCALE IN INCHES FOR REDUCED PLANS 0 1 2 3

UNIT 3596
PROJECT NUMBER & PHASE 08000004541

DISREGARD PRINTS BEARING EARLIER REVISION DATES → 4/5/10 12/15/10 05/07/12 6/4/12 12/4/12

REVISION DATES (PRELIMINARY STAGE ONLY) SHEET OF

EA 08-0M0204

16-JAN-2013 05:36

ee_01.dgn

Dist	COUNTY	LOCATION CODE	POST MILES TOTAL PROJECT	SHEET No.	TOTAL SHEETS
08	SBd	5712		16	22

REGISTERED ELECTRICAL ENGINEER — 06-04-12 DATE

REGISTERED PROFESSIONAL ENGINEER J. ABDELSAYED No. 18915 Exp. 12-31-13 ELEC STATE OF CALIFORNIA

12-24-12
PLANS APPROVAL DATE

The State of California or its officers or agents shall not be responsible for the accuracy or completeness of scanned copies of this plan sheet.

CALIFORNIA STATE FIRE MARSHAL APPROVED
Approval of this plan does not authorize or approve any omission or deviation from applicable regulations. Final approval is subject to field inspection. One set of approved plans shall be available on the project site at all times.
Reviewed by: FRANCIS SOLICH
Approval date: 4/30/12

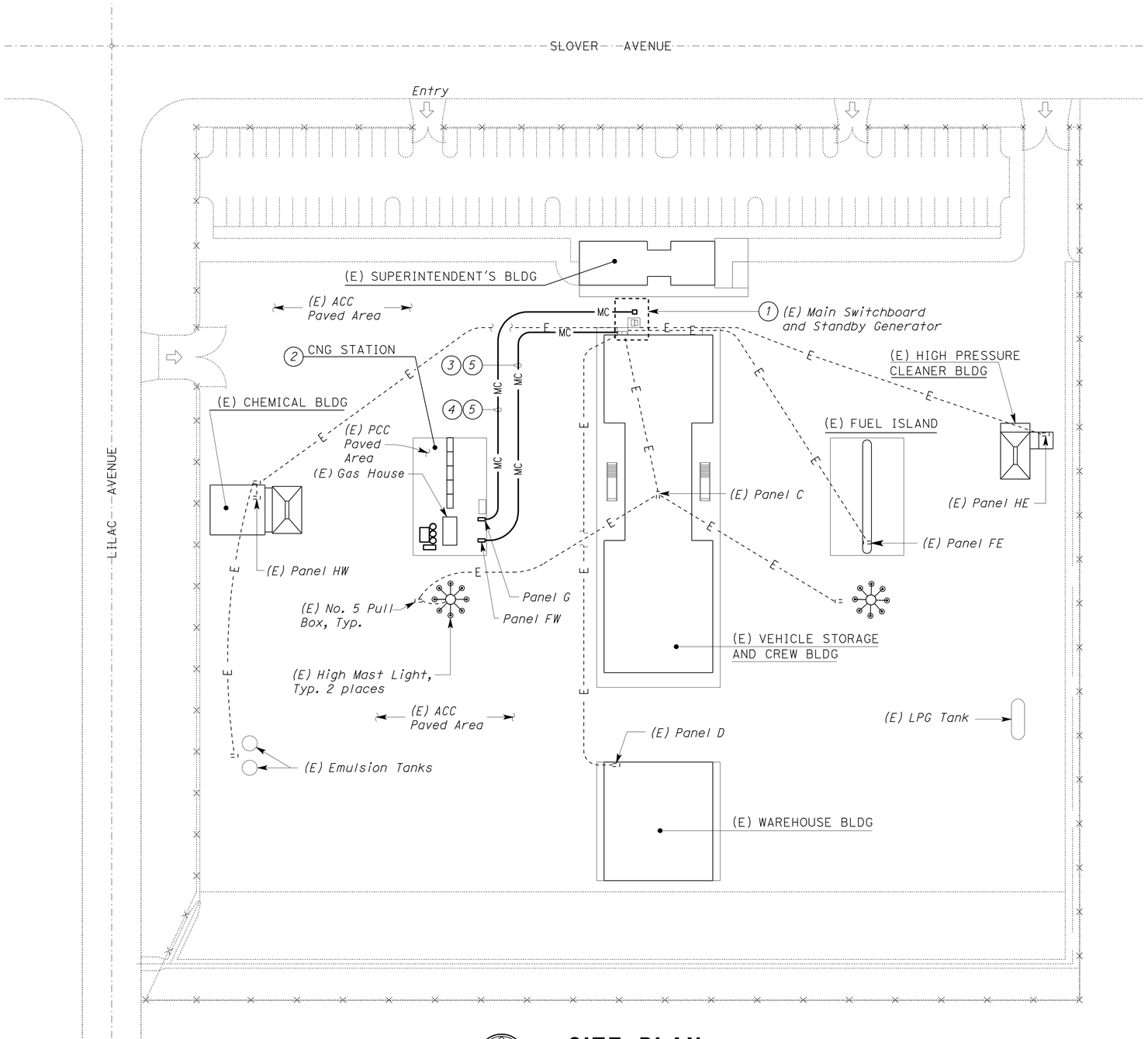

SITE PLAN

SCALE 1" = 40'-0"

General Note:

A. *Not all existing underground conduits and pipes are shown. In addition, location of the entire existing conduit and conductor system is approximate only. Therefore, the contractor shall verify location of all existing underground conduits and pipes prior to jacking conduits. Verifying location of existing conduits and pipes shall be paid as part of building lump sum.*

Notes:

(1) *For enlarged plan view see sheet EE-4.*

(2) *For enlarged plan view of CNG Station and adjacent High Mast Light, see sheet EE-6.*

(3) *2"C, 4#1, 1#6G to Main Switchboard. For continuation, see sheet EE-4.*

(4) *3"C, 3#300 MCM, 1#2G to CNG Transformer. For continuation, see sheet EE-4.*

(5) *Jack conduit underneath existing paved surfaces.*

THIS DRAWING ACCURATE FOR ELECTRICAL WORK ONLY

	BY	CHECKED
DESIGN	Joseph Abdelsayed	J.S. Sandhu
DETAILS	Ed D. Tapalla 8/10	Joseph Abdelsayed
QUANTITIES	Joseph Abdelsayed	J.S. Sandhu

STATE OF CALIFORNIA DEPARTMENT OF TRANSPORTATION

DIVISION OF ENGINEERING SERVICES
ELECTRICAL-MECHANICAL-WATER AND WASTEWATER DESIGN

BRIDGE No.
POST MILE

MAGANA-ORTEGA MS

MODIFIED SITE PLAN

SHEET **EE-2**

DOES SD Imperial Rev. 9/02

ORIGINAL SCALE IN INCHES FOR REDUCED PLANS 0 1 2 3

UNIT 3596
PROJECT NUMBER & PHASE 08000004541

DISREGARD PRINTS BEARING EARLIER REVISION DATES → 12/15/10 05/07/12 6/14/12 12/4/12

REVISION DATES (PRELIMINARY STAGE ONLY) SHEET OF

EA 08-0M0204

ee_02.dgn

16-JAN-2013 05:36

Dist	COUNTY	LOCATION CODE	POST MILES TOTAL PROJECT	SHEET No.	TOTAL SHEETS
08	SBd	5712		17	22

REGISTERED ELECTRICAL ENGINEER — 06-04-12 DATE

REGISTERED PROFESSIONAL ENGINEER J. ABDELSAYED No. 18915 Exp. 12-31-13 ELEC STATE OF CALIFORNIA

12-24-12
PLANS APPROVAL DATE

The State of California or its officers or agents shall not be responsible for the accuracy or completeness of scanned copies of this plan sheet.

CALIFORNIA STATE FIRE MARSHAL APPROVED

Approval of this plan does not authorize or approve any omission or deviation from applicable regulations. Final approval is subject to field inspection. One set of approved plans shall be available on the project site at all times.

Reviewed by: FRANCIS SOLICH

Approval date: 4/30/12

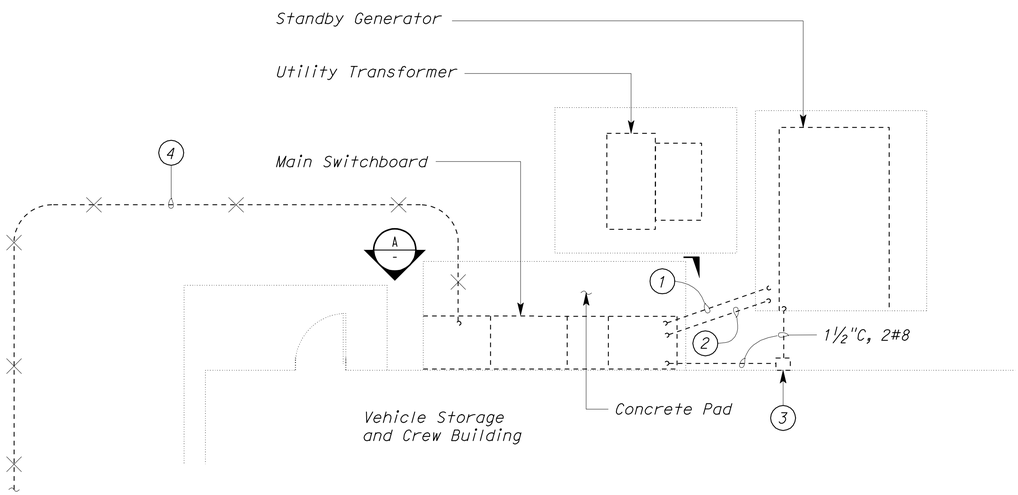

ENLARGED PLAN

NO SCALE

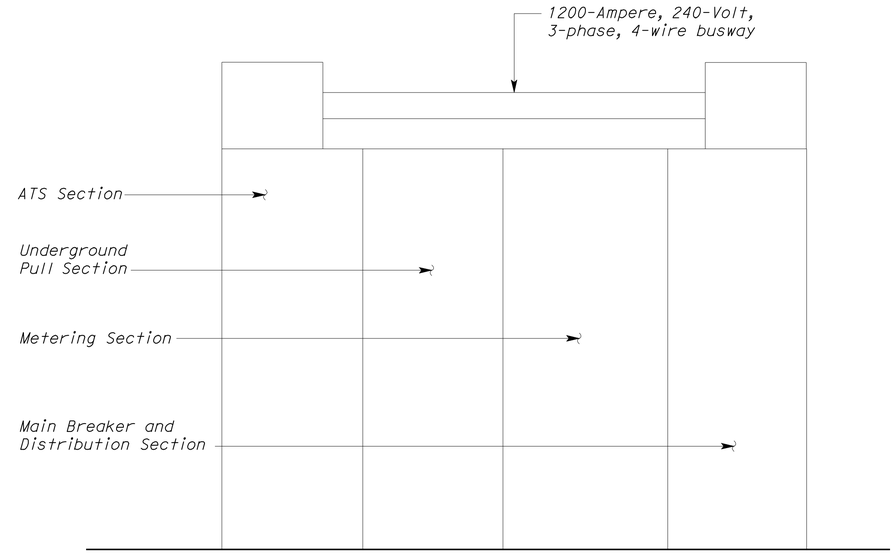

A ELEVATION

NO SCALE

Notes:

1. (2) 4"C, 4#350 MCM.
2. 1½"C, Control conductors.
3. Engine preheater and battery charger disconnect.
4. 1½"C, 4#1, 1#6G to No. 5 Pull Box for feeding Panel FW. Remove conductors and abandon underground conduit. For continuation, see sheet EE-1.

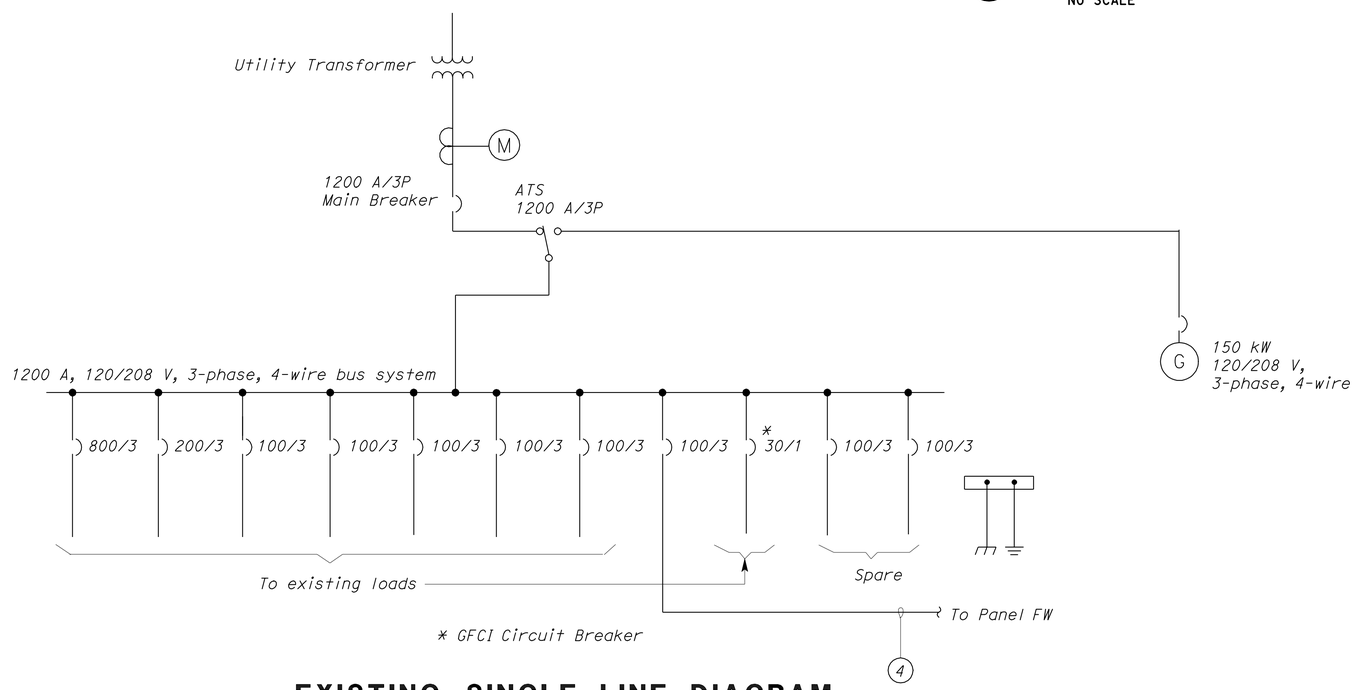

EXISTING SINGLE LINE DIAGRAM

NO SCALE

THIS DRAWING ACCURATE FOR ELECTRICAL WORK ONLY

	BY	CHECKED
DESIGN	Joseph Abdelsayed	J.S. Sandhu
DETAILS	Joseph Abdelsayed	J.S. Sandhu
QUANTITIES	Joseph Abdelsayed	J.S. Sandhu

STATE OF CALIFORNIA DEPARTMENT OF TRANSPORTATION

DIVISION OF ENGINEERING SERVICES
ELECTRICAL-MECHANICAL-WATER AND WASTEWATER DESIGN

BRIDGE No.
POST MILE

MAGANA-ORTEGA MS

EXISTING MAIN SWITCHBOARD

SHEET **EE-3**

DOES SD Imperial Rev. 9/02

ORIGINAL SCALE IN INCHES FOR REDUCED PLANS 0 1 2 3

UNIT 3596
PROJECT NUMBER & PHASE 08000004541

DISREGARD PRINTS BEARING EARLIER REVISION DATES →

REVISION DATES (PRELIMINARY STAGE ONLY): 12/15/10 05/01/12 6/4/12 12/4/12

SHEET OF

EA 08-0M0204

16-JAN-2013 05:36

ee_03.dgn

Dist	COUNTY	LOCATION CODE	POST MILES TOTAL PROJECT	SHEET No.	TOTAL SHEETS
08	SBd	5712		18	22

REGISTERED ELECTRICAL ENGINEER — 06-04-12 DATE

REGISTERED PROFESSIONAL ENGINEER J. ABDELSAYED No. 18915 Exp. 12-31-13 ELEC STATE OF CALIFORNIA

12-24-12
PLANS APPROVAL DATE

The State of California or its officers or agents shall not be responsible for the accuracy or completeness of scanned copies of this plan sheet.

CALIFORNIA STATE FIRE MARSHAL APPROVED
Approval of this plan does not authorize or approve any omission or deviation from applicable regulations. Final approval is subject to field inspection. One set of approved plans shall be available on the project site at all times.
Reviewed by: FRANCIS SOLICH
Approval date: 4/30/12

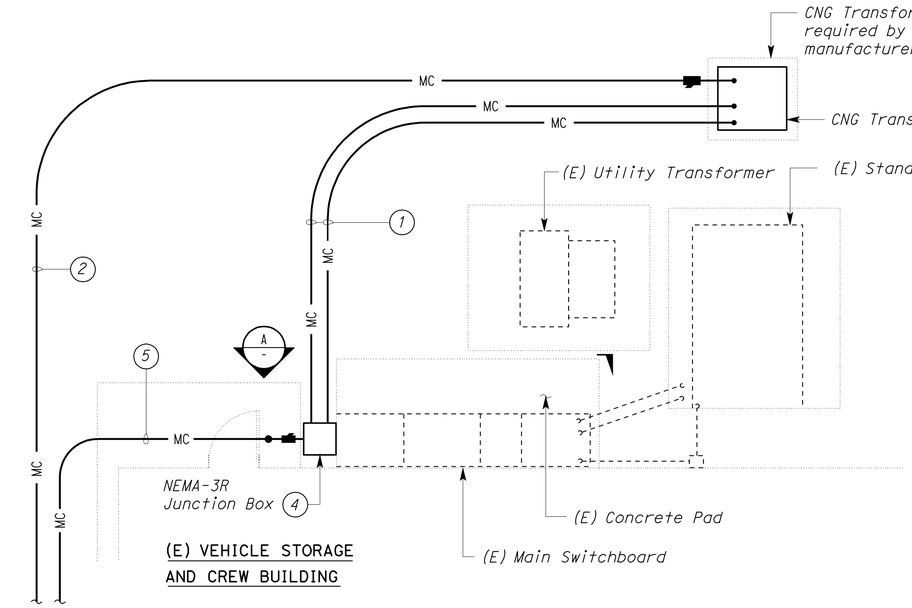

ENLARGED PLAN

NO SCALE

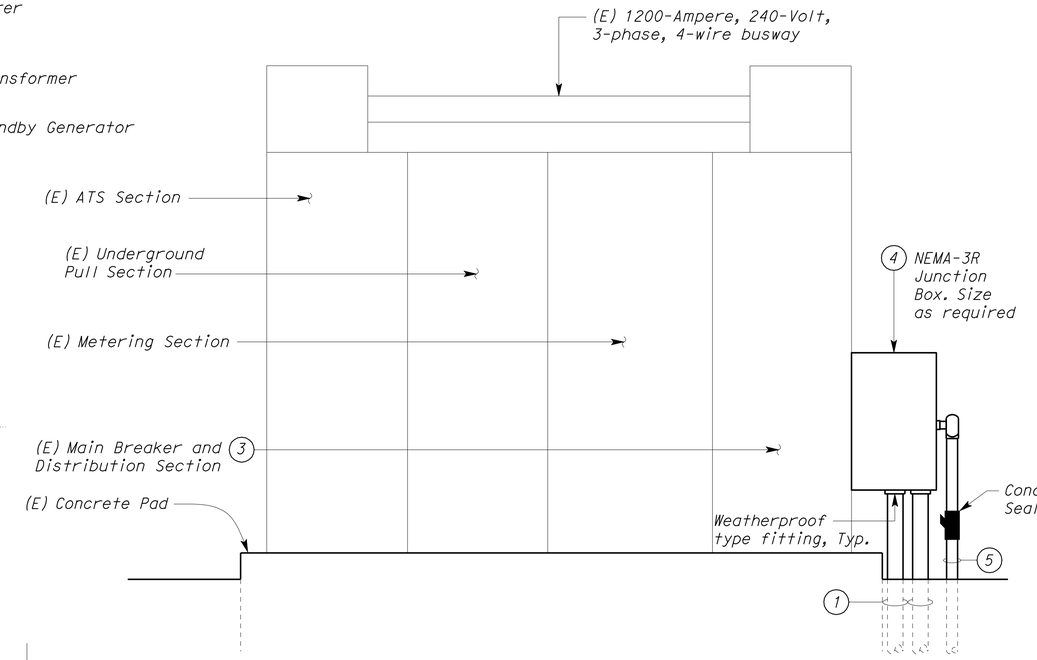

A ELEVATION

NO SCALE

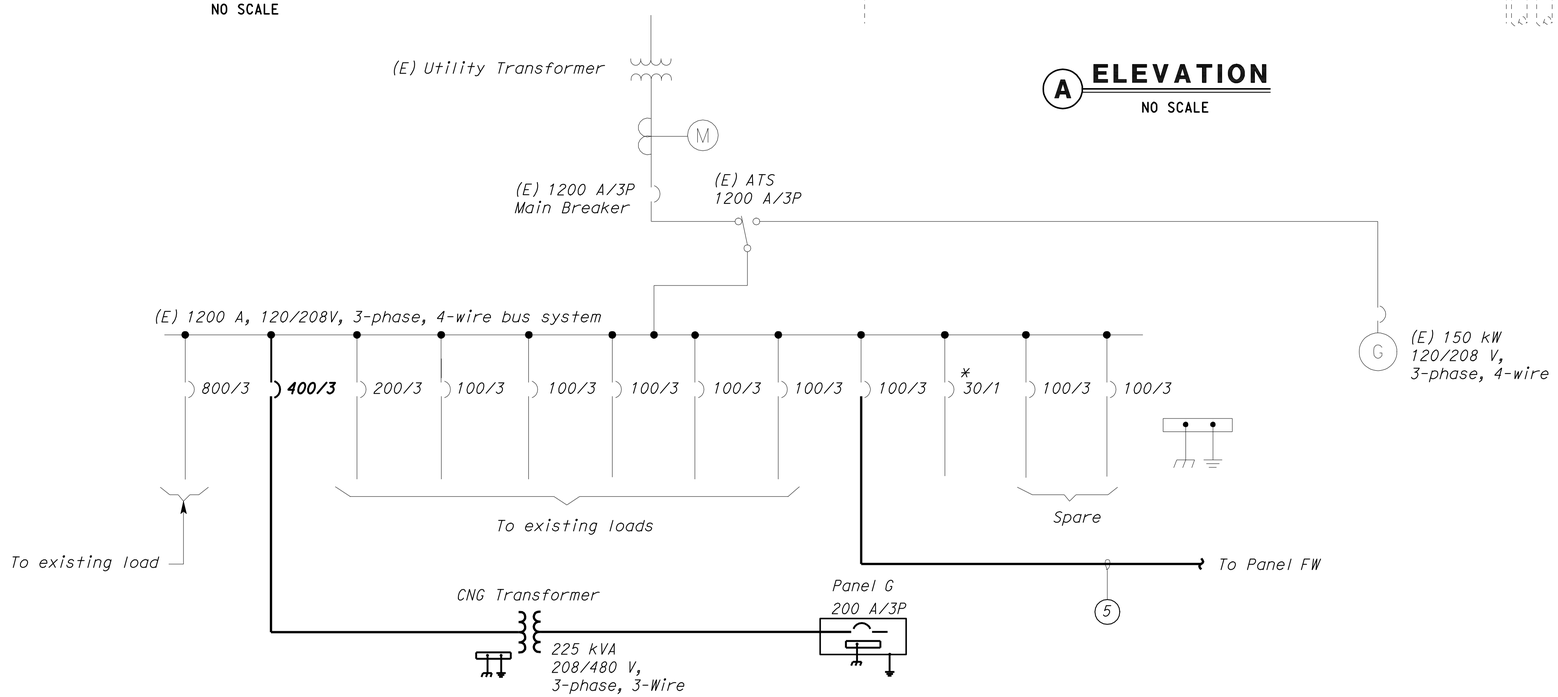

MODIFIED SINGLE LINE DIAGRAM

NO SCALE

* GFCI Circuit Breaker

Notes:

1. 3"C, 3#300 MCM, 1#2G.
2. 3"C, 3#300 MCM, 1#2G to Panel G.
3. Existing Main Switchboard is type Square D, 1200-A, 120/208-V, 3-phase 4-wire switchboard, catalog number 2867 416-A0. Install 400 A/3P circuit breaker with power distribution type lugs inside the Main Breaker and Distribution Section of the Main Switchboard. Terminate 6#300 MCM ungrounded circuit conductors onto the load side of the 400 A/3P circuit breaker and rewire 3#1 ungrounded circuit conductors onto the load side of the existing 100 A/3P circuit breaker feeding Panel FW. Terminate grounded circuit conductor onto the neutral bus, and terminate both equipment grounding conductors onto the ground bus. Provide label for new 400 A/3P circuit breaker that reads, "PANEL G".
4. Mount NEMA-3R junction box onto existing Main Swichboard at a height as directed by the Engineer in the field. Punch hole through NEMA-3R Junction Box and through existing Main Switchboard and install three conduit nipples with bushings. Install (2) 3"C, 3#300, 1#2G and (1) 2"C, 4#1, 1#6G and wire.
5. 2"C, 4#1, 1#6G to Panel FW.

THIS DRAWING ACCURATE FOR ELECTRICAL WORK ONLY

	BY	CHECKED
DESIGN	Joseph Abdelsayed	J.S. Sandhu
DETAILS	Joseph Abdelsayed	J.S. Sandhu
QUANTITIES	Joseph Abdelsayed	J.S. Sandhu

STATE OF CALIFORNIA
DEPARTMENT OF TRANSPORTATION

DIVISION OF ENGINEERING SERVICES
ELECTRICAL-MECHANICAL-WATER AND WASTEWATER DESIGN

BRIDGE No.
POST MILE

MAGANA-ORTEGA MS

MODIFIED MAIN SWITCHBOARD

SHEET **EE-4**

DOES SD Imperial Rev. 9/02

ORIGINAL SCALE IN INCHES FOR REDUCED PLANS 0 1 2 3

UNIT 3596
PROJECT NUMBER & PHASE 08000004541

DISREGARD PRINTS BEARING EARLIER REVISION DATES → 12/15/10 05/01/12 6/14/12 12/4/12

REVISION DATES (PRELIMINARY STAGE ONLY) SHEET OF

EA 08-0M0204

ee_04.dgn

16-JAN-2013 05:37

Dist.	COUNTY	LOCATION CODE	POST MILES TOTAL PROJECT	SHEET No.	TOTAL SHEETS
08	SBd	5712		19	22

REGISTERED ELECTRICAL ENGINEER — 06-04-12 DATE

REGISTERED PROFESSIONAL ENGINEER J. ABDELSAYED No. 18915 Exp. 12-31-13 ELEC STATE OF CALIFORNIA

12-24-12
PLANS APPROVAL DATE

The State of California or its officers or agents shall not be responsible for the accuracy or completeness of scanned copies of this plan sheet.

CALIFORNIA STATE FIRE MARSHAL APPROVED
Approval of this plan does not authorize or approve any omission or deviation from applicable regulations. Final approval is subject to field inspection. One set of approved plans shall be available on the project site at all times.
Reviewed by: FRANCIS SOLICH
Approval date: 4/30/12

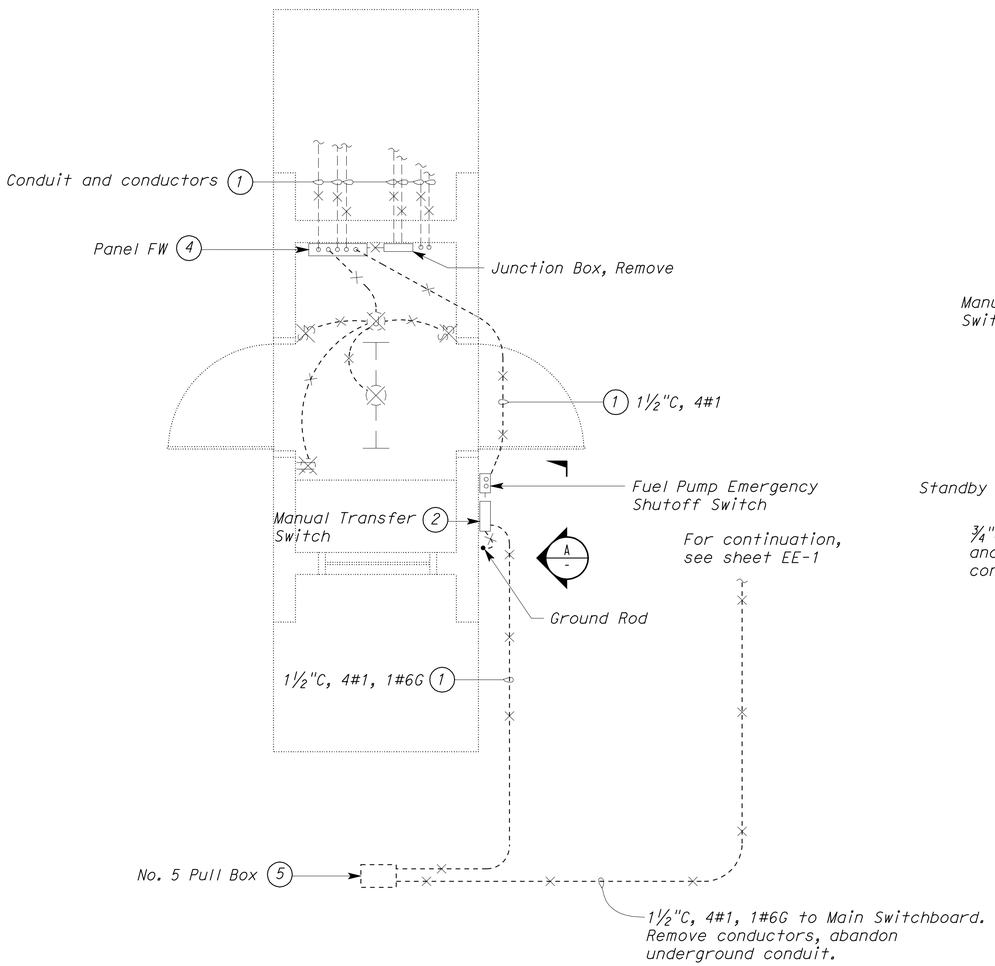

PLAN
SCALE ½" = 1'-0"

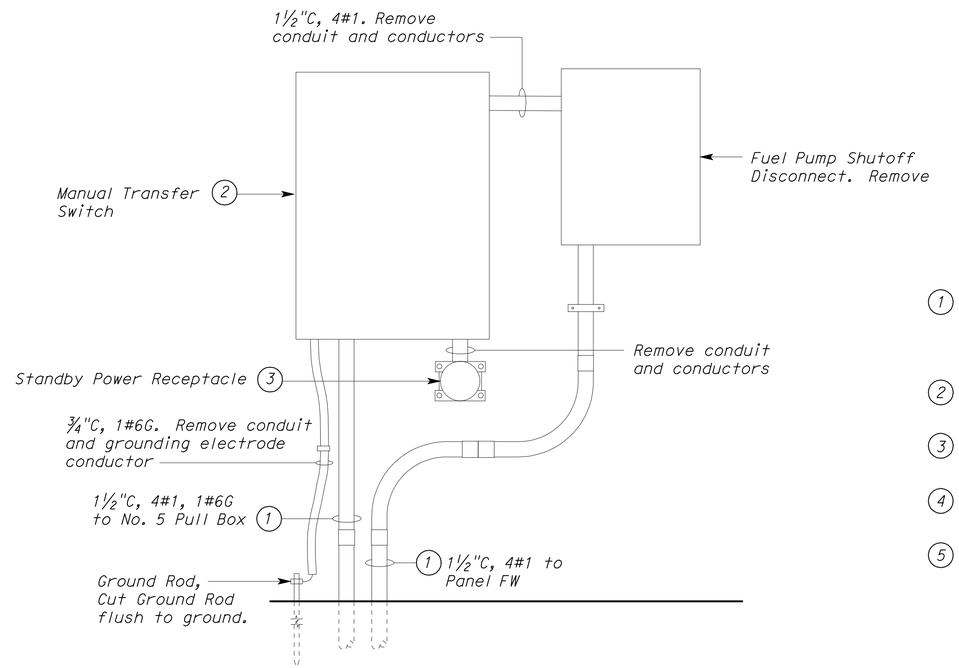

(A) ELEVATION
NO SCALE

Notes:

1. Remove conductors and abandon underground conduit. Cut exposed portion of conduit flush to ground and fill resulting hole with mortar.
2. Salvage Manual Transfer Switch and deliver to Caltrans maintenance personnel.
3. Salvage Standby Power Receptacle and deliver to Caltrans maintenance personnel.
4. Salvage Panel FW and deliver to Caltrans maintenance personnel.
5. Remove pull box, and pave hole resulting from pull box removal as directed by the engineer.

THIS DRAWING ACCURATE FOR ELECTRICAL WORK ONLY

	BY	CHECKED
DESIGN	Joseph Abdelsayed	J.S. Sandhu
DETAILS	Dali Zhou	Joseph Abdelsayed
QUANTITIES	Joseph Abdelsayed	J.S. Sandhu

STATE OF CALIFORNIA
DEPARTMENT OF TRANSPORTATION

DIVISION OF ENGINEERING SERVICES
ELECTRICAL-MECHANICAL-WATER AND WASTEWATER DESIGN

BRIDGE No.
POST MILE

MAGANA-ORTEGA MS
EXISTING GAS HOUSE

SHEET **EE-5**

DOES SD Imperial Rev. 9/02

ORIGINAL SCALE IN INCHES FOR REDUCED PLANS 0 1 2 3

UNIT 3596
PROJECT NUMBER & PHASE 08000004541

DISREGARD PRINTS BEARING EARLIER REVISION DATES → 12/15/10 05/07/12 6/14/12 12/4/12

REVISION DATES (PRELIMINARY STAGE ONLY) SHEET OF

EA 08-0M0204

ee_05.dgn

16-JAN-2013 05:37

Dist.	COUNTY	LOCATION CODE	POST MILES TOTAL PROJECT	SHEET No.	TOTAL SHEETS
08	SBd	5712		20	22

REGISTERED ELECTRICAL ENGINEER — 06-04-12 DATE

REGISTERED PROFESSIONAL ENGINEER J. ABDELSAYED No. 18915 Exp. 12-31-13 ELEC STATE OF CALIFORNIA

12-24-12
PLANS APPROVAL DATE

The State of California or its officers or agents shall not be responsible for the accuracy or completeness of scanned copies of this plan sheet.

CALIFORNIA STATE FIRE MARSHAL APPROVED
Approval of this plan does not authorize or approve any omission or deviation from applicable regulations. Final approval is subject to field inspection. One set of approved plans shall be available on the project site at all times.
Reviewed by: FRANCIS SOLICH
Approval date: 4/30/12

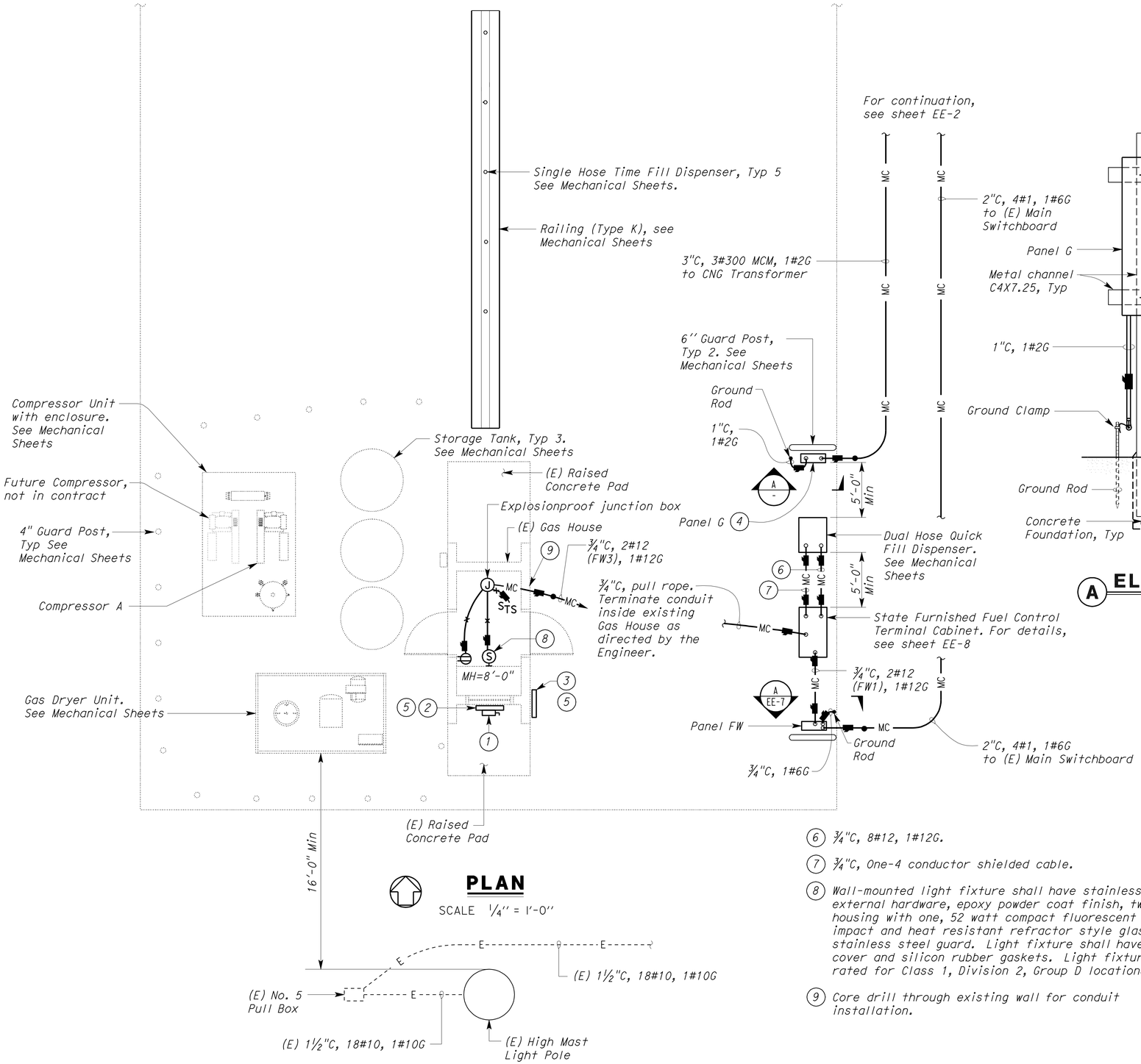

PLAN
SCALE 1/4'' = 1'-0''

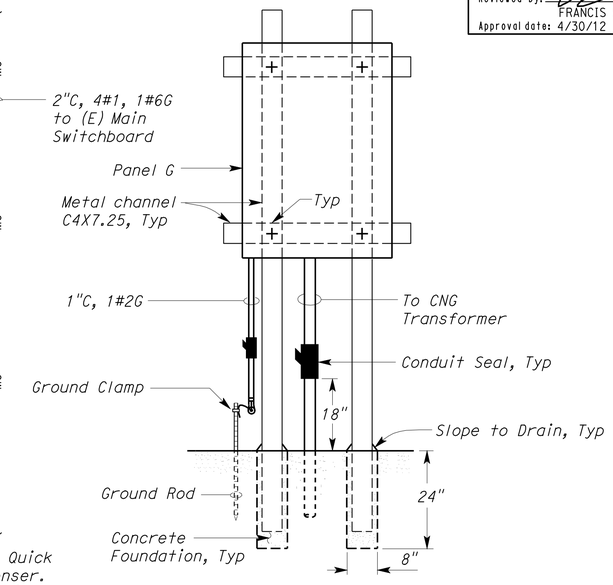

A ELEVATION
NO SCALE

Compressed Natural Gas Fuel System Electrical Requirements:

1. All Electrical work required for the CNG Fueling System shall comply with NFPA 52: Vehicular Fuel Systems Code, California Electrical Code 2010, and NFPA 70E: Standard for Electrical Safety in the Workplace.

2. CNG Fueling System shall include all equipment and devices as described under the Mechanical portion of the Special Provisions, and as shown on the Mechanical and Electrical plans.

3. All conduits installed on the west side of the existing Gas House shall be installed on the surface of the existing pavement. Conduit shall be supported to the pavement using unistrut.

4. All conduits installed on the east side of the existing Gas House shall be installed underground.

5. All branch circuit conductors and equipment grounding conductors shall be sized to meet or exceed the following:

- Voltage drop of any branch circuit conductor shall not exceed 2%.
- Upon occurrence of any kind of fault at any point in the system, overcurrent protective devices shall trip within ½ cycle.

6. For electrical rating of all equipment installed for the entire CNG Fueling System, see Mechanical sheets.

(6) ¾"C, 8#12, 1#12G.

(7) ¾"C, One-4 conductor shielded cable.

(8) Wall-mounted light fixture shall have stainless steel external hardware, epoxy powder coat finish, two-piece housing with one, 52 watt compact fluorescent lamp, impact and heat resistant refractor style glass with stainless steel guard. Light fixture shall have side-hinged cover and silicon rubber gaskets. Light fixture shall be rated for Class 1, Division 2, Group D locations.

(9) Core drill through existing wall for conduit installation.

Notes:

(1) Emergency CNG Shutoff Switch. CNG Shutoff switch shall be included as part of the Compressed Natural Gas design and installation submittal.

(2) Emergency CNG Shutoff Warning Switch sign (mount above switch). Inscription shall read: EMERGENCY CNG SHUTOFF SWITCH.

(3) Emergency CNG Shutoff Warning Switch sign. Inscription shall read:

EMERGENCY CNG SHUTOFF SWITCH

(4) Size Branch Circuit Breakers as required for overcurrent protection of all Compressed Natural Gas System electrical equipment.

(5) Fasten warning sign to the wall with at least 6 anchorage devices.

THIS DRAWING ACCURATE FOR ELECTRICAL WORK ONLY

	BY	CHECKED
DESIGN	Joseph Abdelsayed	J.S. Sandhu
DETAILS	Joseph Abdelsayed	J.S. Sandhu
QUANTITIES	Joseph Abdelsayed	J.S. Sandhu

STATE OF CALIFORNIA DEPARTMENT OF TRANSPORTATION

DIVISION OF ENGINEERING SERVICES
ELECTRICAL-MECHANICAL-WATER AND WASTEWATER DESIGN

BRIDGE No.
POST MILE

MAGANA-ORTEGA MS

ENLARGED CNG STATION POWER PLAN

SHEET **EE-6**

DOES SD Imperial Rev. 9/02

ORIGINAL SCALE IN INCHES FOR REDUCED PLANS 0 1 2 3

UNIT 3596
PROJECT NUMBER & PHASE 08000004541

DISREGARD PRINTS BEARING EARLIER REVISION DATES → 12/15/10 05/07/12 6/4/12 12/4/12

REVISION DATES (PRELIMINARY STAGE ONLY) SHEET OF

EA 08-0M0204

ee_06.dgn

16-JAN-2013 08:37

Dist.	COUNTY	LOCATION CODE	POST MILES TOTAL PROJECT	SHEET No.	TOTAL SHEETS
08	SBd	5712		21	22

REGISTERED ELECTRICAL ENGINEER — 06-04-12 DATE

REGISTERED PROFESSIONAL ENGINEER J. ABDELSAYED No. 18915 Exp. 12-31-13 ELEC STATE OF CALIFORNIA

12-24-12
PLANS APPROVAL DATE

The State of California or its officers or agents shall not be responsible for the accuracy or completeness of scanned copies of this plan sheet.

CALIFORNIA STATE FIRE MARSHAL APPROVED
Approval of this plan does not authorize or approve any omission or deviation from applicable regulations. Final approval is subject to field inspection. One set of approved plans shall be available on the project site at all times.
Reviewed by: FRANCIS SOLICH
Approval date: 4/30/12

MAIN: 100 A/3P
VOLTS: 120/208, 3-PHASE, 4-WIRE

PANEL FW

FEEDER SIZE: 4#1, 1#6G
LOCATION: CNG STATION

DESCRIPTION	AMPERES A	AMPERES B	AMPERES C	BRK	CKT	A B C	CKT	BRK	AMPERES A	AMPERES B	AMPERES C	DESCRIPTION
FUEL CONTROL TERMINAL	10			20/1	1		2		-			
GAS HOUSE RECEPTACLE AND LIGHT		3		20/1	3		4	30/3		-		SPARE
SPARE			-	20/1	5		6				-	
SPARE	-			20/1	7		8		-			
SPARE		-		20/1	9		10	30/3		-		SPARE
SPARE			-	20/1	11		12				-	
SPACE	-				13		14		-			SPACE
SPACE		-			15		16			-		SPACE
SPACE			-		17		18				-	SPACE
SPACE	-				19		20		-			SPACE
SPACE		-			21		22			-		SPACE
SPACE			-		23		24				-	SPACE
SPACE	-				25		26		-			SPACE
SPACE		-			27		28			-		SPACE
SPACE			-		29		30				-	SPACE

A	B	C	
10	3	-	TOTAL CONNECTED LOAD (AMPERES PER PHASE)

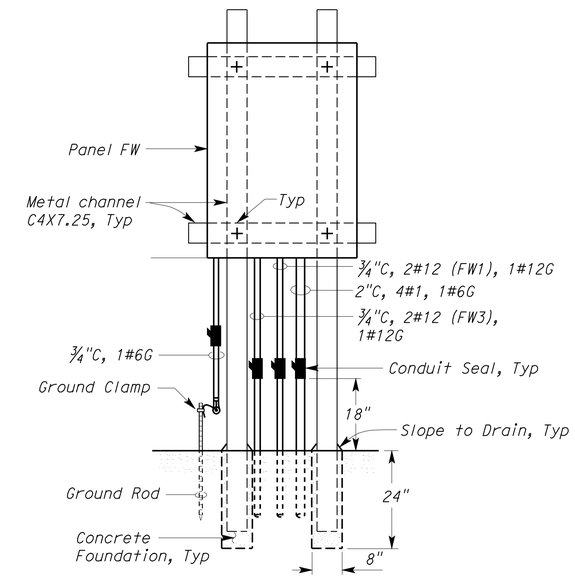

A ELEVATION
NO SCALE

THIS DRAWING ACCURATE FOR ELECTRICAL WORK ONLY

	BY	CHECKED
DESIGN	Joseph Abdelsayed	J.S. Sandhu
DETAILS	Joseph Abdelsayed	J.S. Sandhu
QUANTITIES	Joseph Abdelsayed	J.S. Sandhu

STATE OF CALIFORNIA DEPARTMENT OF TRANSPORTATION

DIVISION OF ENGINEERING SERVICES
ELECTRICAL-MECHANICAL-WATER AND WASTEWATER DESIGN

BRIDGE No.
POST MILE

MAGANA-ORTEGA MS

PANEL FW DETAILS

SHEET **EE-7**

DOES SD Imperial Rev. 9/02

ORIGINAL SCALE IN INCHES FOR REDUCED PLANS 0 1 2 3

UNIT 3596
PROJECT NUMBER & PHASE 08000004541

DISREGARD PRINTS BEARING EARLIER REVISION DATES → 12/15/10 05/07/12 6/14/12 12/4/12

REVISION DATES (PRELIMINARY STAGE ONLY) SHEET OF

EA 08-0M0204

ee_07.dgn

16-JAN-2013 05:37

Dist.	COUNTY	LOCATION CODE	POST MILES TOTAL PROJECT	SHEET No.	TOTAL SHEETS
08	SBd	5712		22	22

REGISTERED ELECTRICAL ENGINEER — 06-04-12 DATE

REGISTERED PROFESSIONAL ENGINEER J. ABDELSAYED No. 18915 Exp. 12-31-13 ELEC STATE OF CALIFORNIA

12-24-12
PLANS APPROVAL DATE

The State of California or its officers or agents shall not be responsible for the accuracy or completeness of scanned copies of this plan sheet.

ACCESSIBILITY DESIGN APPROVAL STAMP
DOT / DES / OTA
PROJECT ID
0800000454
Reviewed by: YA WANG
Date: 4/27/12

CALIFORNIA STATE FIRE MARSHAL
APPROVED
Approval of this plan does not authorize or approve any omission or deviation from applicable regulations. Final approval is subject to field inspection. One set of approved plans shall be available on the project site at all times.
Reviewed by: FRANCIS SOLICH
Approval date: 4/30/12

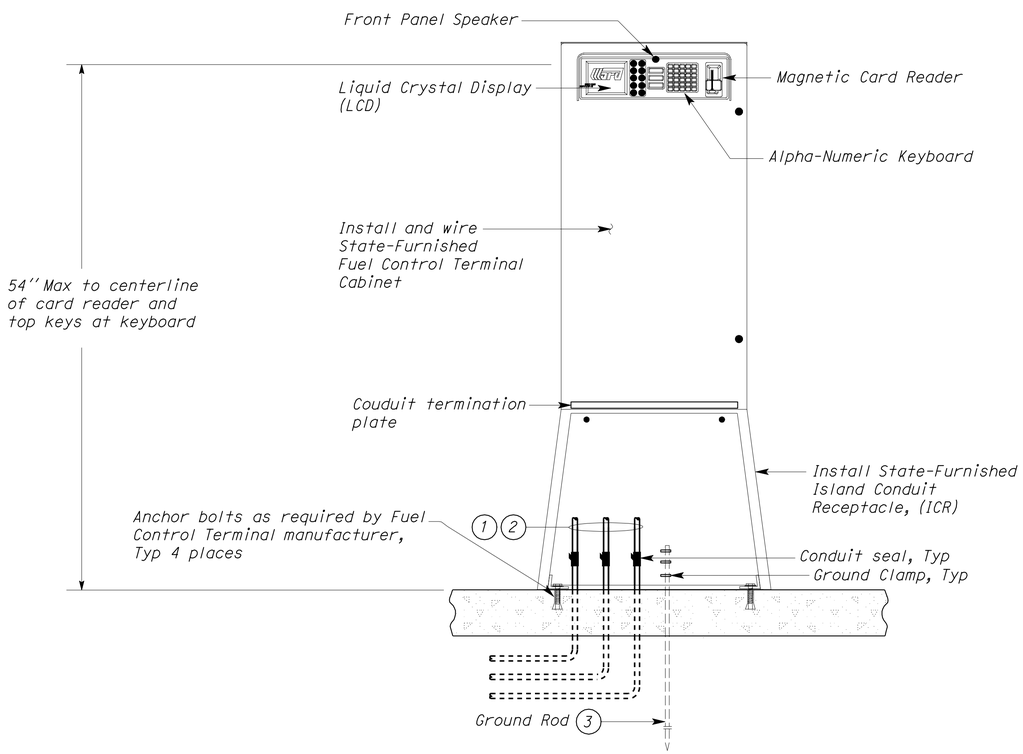

A FUEL CONTROL TERMINAL DETAIL

NO SCALE

General Note:

A. *Not all electrical components and interconnections are shown. Perform all work as required for the complete installation of the Fuel Control Terminal.*

Notes:

1. *For number and size of conduits and conductors to and from ICR, see sheet EE-6.*
2. *Install conduit seal in conduit run and extend conduit to allow for termination on conduit termination plate on top of the ICR.*
3. *Conduit connections from ground rod to metal piping of Gasoline and Diesel Fuel and Panel G are not shown for clarity.*

THIS DRAWING ACCURATE FOR ELECTRICAL WORK ONLY

	BY	CHECKED
DESIGN	Joseph Abdelsayed	J.S. Sandhu
DETAILS	Joseph Abdelsayed	J.S. Sandhu
QUANTITIES	Joseph Abdelsayed	J.S. Sandhu

STATE OF CALIFORNIA DEPARTMENT OF TRANSPORTATION

DIVISION OF ENGINEERING SERVICES
ELECTRICAL-MECHANICAL-WATER AND WASTEWATER DESIGN

BRIDGE No.
POST MILE

MAGANA-ORTEGA MS

DETAILS

SHEET **EE-8**

DOES SD Imperial Rev. 9/02

ORIGINAL SCALE IN INCHES FOR REDUCED PLANS 0 1 2 3

UNIT 3596
PROJECT NUMBER & PHASE 08000004541

DISREGARD PRINTS BEARING EARLIER REVISION DATES → 12/15/10 05/01/12 6/14/12 12/4/12

REVISION DATES (PRELIMINARY STAGE ONLY) SHEET OF

EA 08-0M0204

ee_08.dgn

16-JAN-2013 05:37