Dist	COUNTY	ROUTE	POST MILES TOTAL PROJECT	SHEET No.	TOTAL SHEETS
06	Ker	5	6.0/9.0	1	43

STATE OF CALIFORNIA **ACNHPI-005-4(193)210E**

DEPARTMENT OF TRANSPORTATION

PROJECT PLANS FOR CONSTRUCTION ON

STATE HIGHWAY

IN KERN COUNTY NEAR OLD FORT TEJON FROM 1.0 MILE NORTH OF FORT TEJON OVERCROSSING TO 1.1 MILES SOUTH OF GRAPEVINE UNDERCROSSING

TO BE SUPPLEMENTED BY STANDARD PLANS DATED 2010

INDEX OF PLANS

SHEET No.	DESCRIPTION
1	TITLE AND LOCATION MAP
2	TYPICAL CROSS SECTIONS
3	CONSTRUCTION DETAILS
4-9	UTILITY PLANS
10	CONSTRUCTION AREA SIGNS
11	TRAFFIC HANDLING PLAN
12-13	SIGN PLANS, DETAILS AND QUANTITIES
14-28	ELECTRICAL PLANS
29-40	REVISED STANDARD PLANS

STRUCTURE PLANS

41-43	EXTINGUISHABLE MESSAGE SIGN

THE STANDARD PLANS LIST APPLICABLE TO THIS CONTRACT IS INCLUDED IN THE NOTICE TO BIDDERS AND SPECIAL PROVISIONS BOOK.

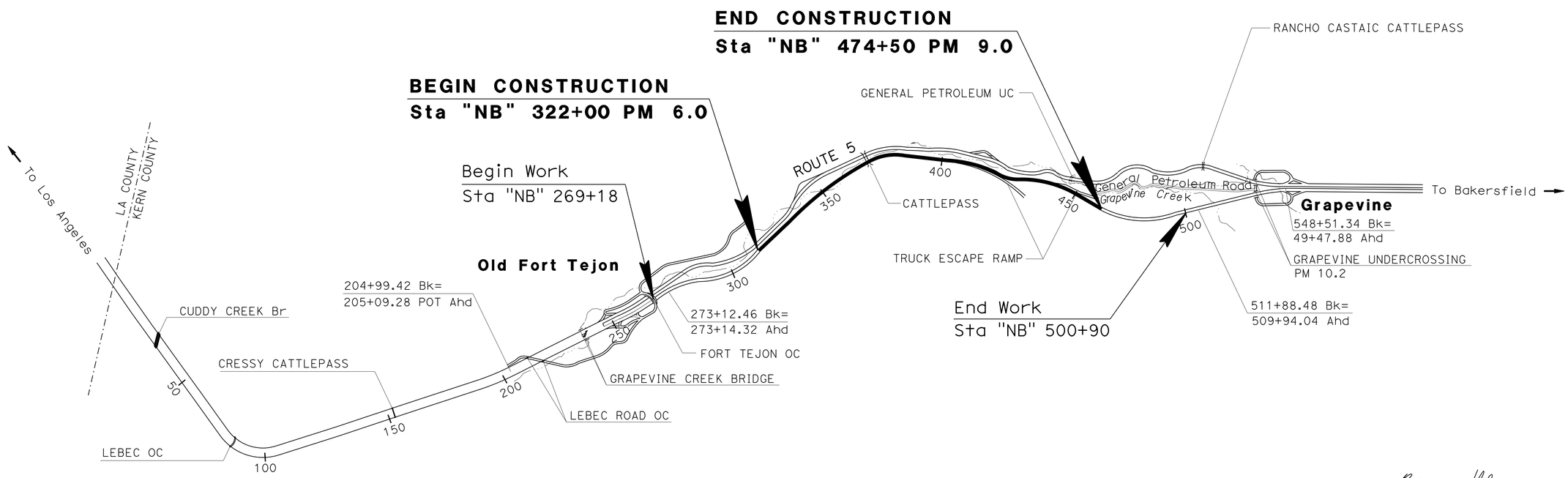

PROJECT MANAGER PAUL PINEDA

DESIGN ENGINEER RICHARD HELGESON

PROJECT ENGINEER / REGISTERED CIVIL ENGINEER — DATE 1-21-14

REGISTERED PROFESSIONAL ENGINEER RICHARD HELGESON No. 62250 Exp. 9/30/15 CIVIL STATE OF CALIFORNIA

January 21, 2014
PLANS APPROVAL DATE

THE STATE OF CALIFORNIA OR ITS OFFICERS OR AGENTS SHALL NOT BE RESPONSIBLE FOR THE ACCURACY OR COMPLETENESS OF SCANNED COPIES OF THIS PLAN SHEET.

THE CONTRACTOR SHALL POSSESS THE CLASS (OR CLASSES) OF LICENSE AS SPECIFIED IN THE "NOTICE TO BIDDERS."

NO SCALE

CONTRACT No.	06-0Q4504
PROJECT ID	0613000117

LAST REVISION 01-10-14 DATE PLOTTED => 11-FEB-2014 TIME PLOTTED => 09:01

Dist	COUNTY	ROUTE	POST MILES TOTAL PROJECT	SHEET No.	TOTAL SHEETS
06	Ker	5	6.0/9.0	2	43

REGISTERED CIVIL ENGINEER 1-13-14 DATE

1-21-14
PLANS APPROVAL DATE

REGISTERED PROFESSIONAL ENGINEER RICHARD HELGESON No. 62250 Exp. 9/30/15 CIVIL STATE OF CALIFORNIA

THE STATE OF CALIFORNIA OR ITS OFFICERS OR AGENTS SHALL NOT BE RESPONSIBLE FOR THE ACCURACY OR COMPLETENESS OF SCANNED COPIES OF THIS PLAN SHEET.

NOTE:

FOR ACCURATE RIGHT OF WAY DATA, CONTACT RIGHT OF WAY ENGINEERING AT THE DISTRICT OFFICE.

ABBREVIATIONS

PBM - PERVIOUS BASE MATERIAL
CTB - CEMENT TREATED BASE
RAC - RUBBERIZED ASPHALT CONCRETE

DESIGN DESIGNATION (ROUTE 5)

2014	ADT	= 41,000	D	= 100%
2034	ADT	= 63,000	TADT	= 23.71%
	DHV	= 7,100	V	= 70 MPH
	TDHV	= 9%	TI	= 16

PAVEMENT CLIMATE REGION

INLAND VALLEY

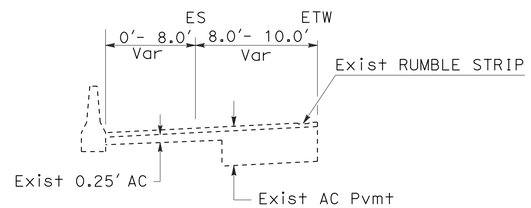

Sta 318+57.31 TO 331+77.31
Sta 403+05.31 TO 459+02.11

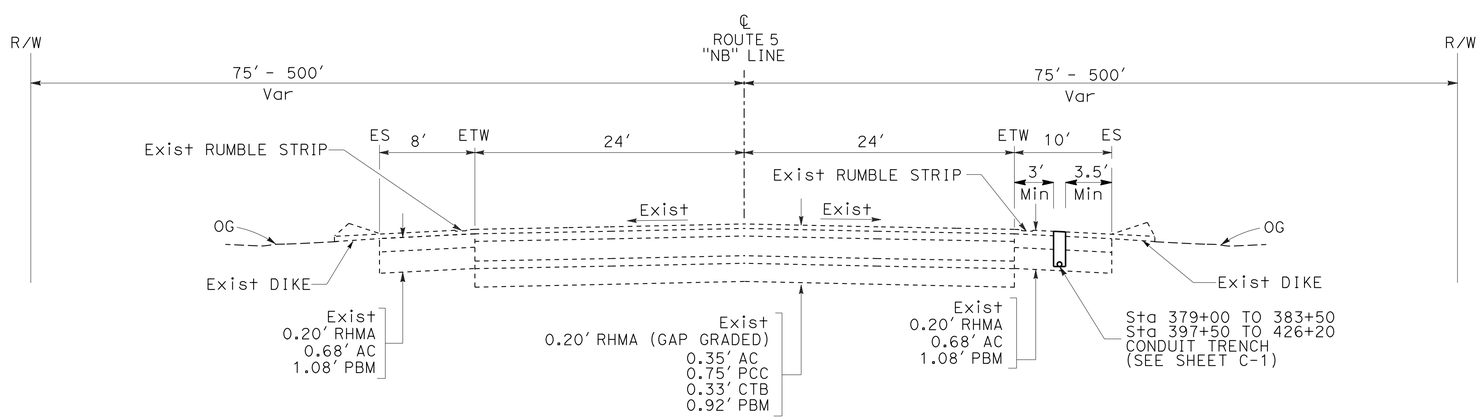

ROUTE 5
NORTHBOUND

TYPICAL CROSS SECTIONS

NO SCALE

X-1

REVISED BY | DATE REVISED
RANDY BOWLES | RICK HELGESON
CALCULATED-DESIGNED BY | CHECKED BY
FUNCTIONAL SUPERVISOR: RICK HELGESON
STATE OF CALIFORNIA - DEPARTMENT OF TRANSPORTATION
Caltrans
DESIGN

LAST REVISION 1-10-14 | DATE PLOTTED => 27-JAN-2014 | TIME PLOTTED => 16:41

Dist	COUNTY	ROUTE	POST MILES TOTAL PROJECT	SHEET No.	TOTAL SHEETS
06	Ker	5	6.0/9.0	3	43

REGISTERED CIVIL ENGINEER 1-13-14 DATE

1-21-14
PLANS APPROVAL DATE

REGISTERED PROFESSIONAL ENGINEER RICHARD HELGESON No. 62250 Exp. 9/30/15 CIVIL STATE OF CALIFORNIA

THE STATE OF CALIFORNIA OR ITS OFFICERS OR AGENTS SHALL NOT BE RESPONSIBLE FOR THE ACCURACY OR COMPLETENESS OF SCANNED COPIES OF THIS PLAN SHEET.

LEGEND: TRENCH FOR ELECTRICAL CONDUIT

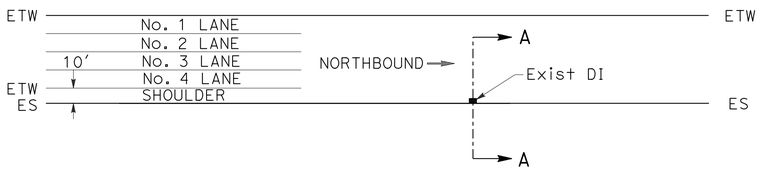

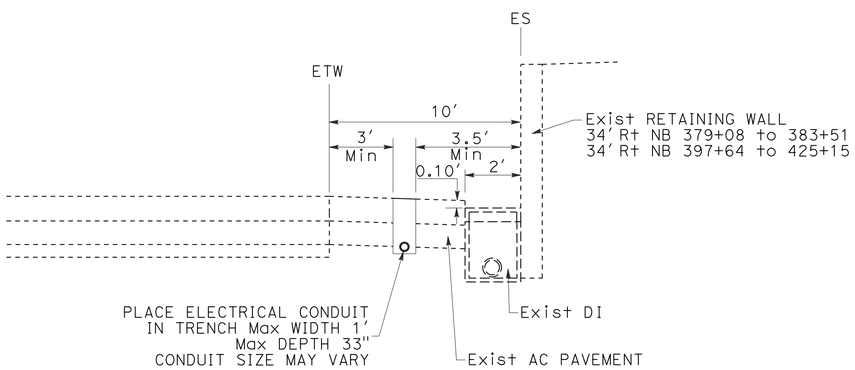

SECTION A-A

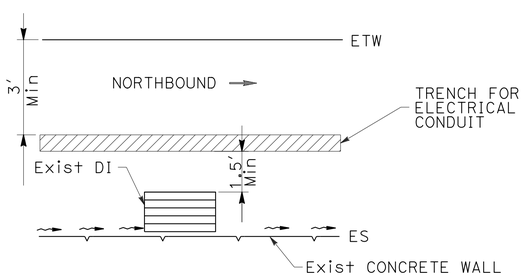

PLAN
Exist DI ADJACENT TO RETAINING WALL
DETAIL 1

TEMPORARY WATER POLLUTION CONTROL QUANTITIES

STATION				TEMPORARY DRAINAGE INLET PROTECTION
				EA
NB	34' Rt	℄ NB LANES	324+00	1
NB	34' Rt	℄ NB LANES	402+50	1
NB	34' Rt	℄ NB LANES	407+30	1
NB	34' Rt	℄ NB LANES	410+55	1
NB	34' Rt	℄ NB LANES	430+00	1
NB	34' Rt	℄ NB LANES	433+25	1
TOTAL				6

DRAINAGE INLET LOCATIONS

NORTHBOUND RIGHT SHOULDER			
NB	34' Rt	℄ NB LANES	STA 315+75
NB	34' Rt	℄ NB LANES	STA 319+12
NB	34' Rt	℄ NB LANES	STA 324+00
NB	34' Rt	℄ NB LANES	STA 327+05
NB	34' Rt	℄ NB LANES	STA 402+50
NB	34' Rt	℄ NB LANES	STA 407+30
NB	34' Rt	℄ NB LANES	STA 410+55
NB	34' Rt	℄ NB LANES	STA 430+00
NB	34' Rt	℄ NB LANES	STA 433+25
NB	34' Rt	℄ NB LANES	STA 436+75

NOTE: LOCATIONS FOR INFORMATION ONLY.
NOT A PAY ITEM.

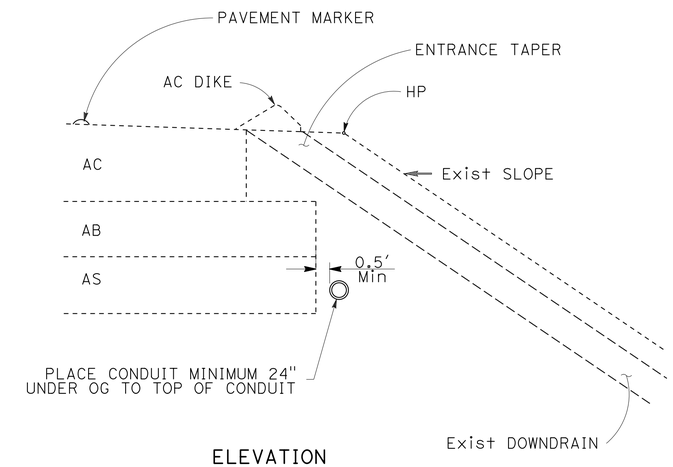

ELEVATION
PLACE CONDUIT UNDER OVERSIDE DRAIN
DETAIL 3

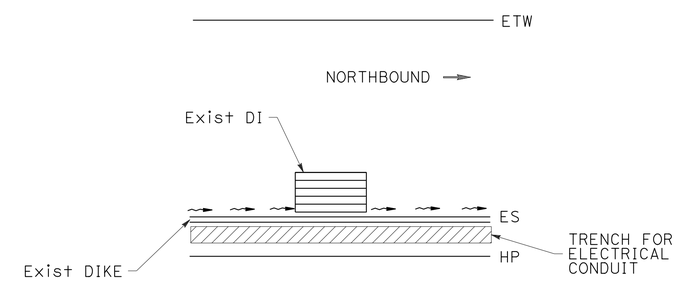

PLAN
Exist DI OR OVERSIDE DRAIN ADJACENT TO DIKE
DETAIL 2

CONSTRUCTION DETAILS

NO SCALE

C-1

STATE OF CALIFORNIA - DEPARTMENT OF TRANSPORTATION
Caltrans
DESIGN

FUNCTIONAL SUPERVISOR: RICK HELGESON
CALCULATED-DESIGNED BY: RANDY BOWLES
CHECKED BY: RICK HELGESON
REVISED BY
DATE REVISED

LAST REVISION 1-10-14
DATE PLOTTED => 27-JAN-2014
TIME PLOTTED => 16:42

Dist	COUNTY	ROUTE	POST MILES TOTAL PROJECT	SHEET No.	TOTAL SHEETS
06	Ker	5	6.0/9.0	4	43

REGISTERED CIVIL ENGINEER 1-13-14 DATE

1-21-14
PLANS APPROVAL DATE

REGISTERED PROFESSIONAL ENGINEER RICHARD HELGESON No. 62250 Exp. 9/30/15 CIVIL STATE OF CALIFORNIA

THE STATE OF CALIFORNIA OR ITS OFFICERS OR AGENTS SHALL NOT BE RESPONSIBLE FOR THE ACCURACY OR COMPLETENESS OF SCANNED COPIES OF THIS PLAN SHEET.

NOTES:

1. FOR ACCURATE RIGHT OF WAY DATA, CONTACT RIGHT OF WAY ENGINEERING AT THE DISTRICT OFFICE.
2. NO SURVEY DATA WAS COLLECTED OR VERIFIED ON THIS PROJECT. NOT ALL UTILITY LOCATIONS ARE SHOWN ON THE PLANS. THE CONTRACTOR MUST FIELD VERIFY ALL UTILITY LOCATIONS WHICH MAY CONFLICT WITH THE PURPOSED WORK BY POTHOLING TO ESTABLISH LOCATION AND ELEVATION.

CURVE DATA

No.	R	Δ	T	L
①	2000′	30°18′00″	541.51′	1057.67′
②	5000′	08°03′00″	351.82′	702.49′

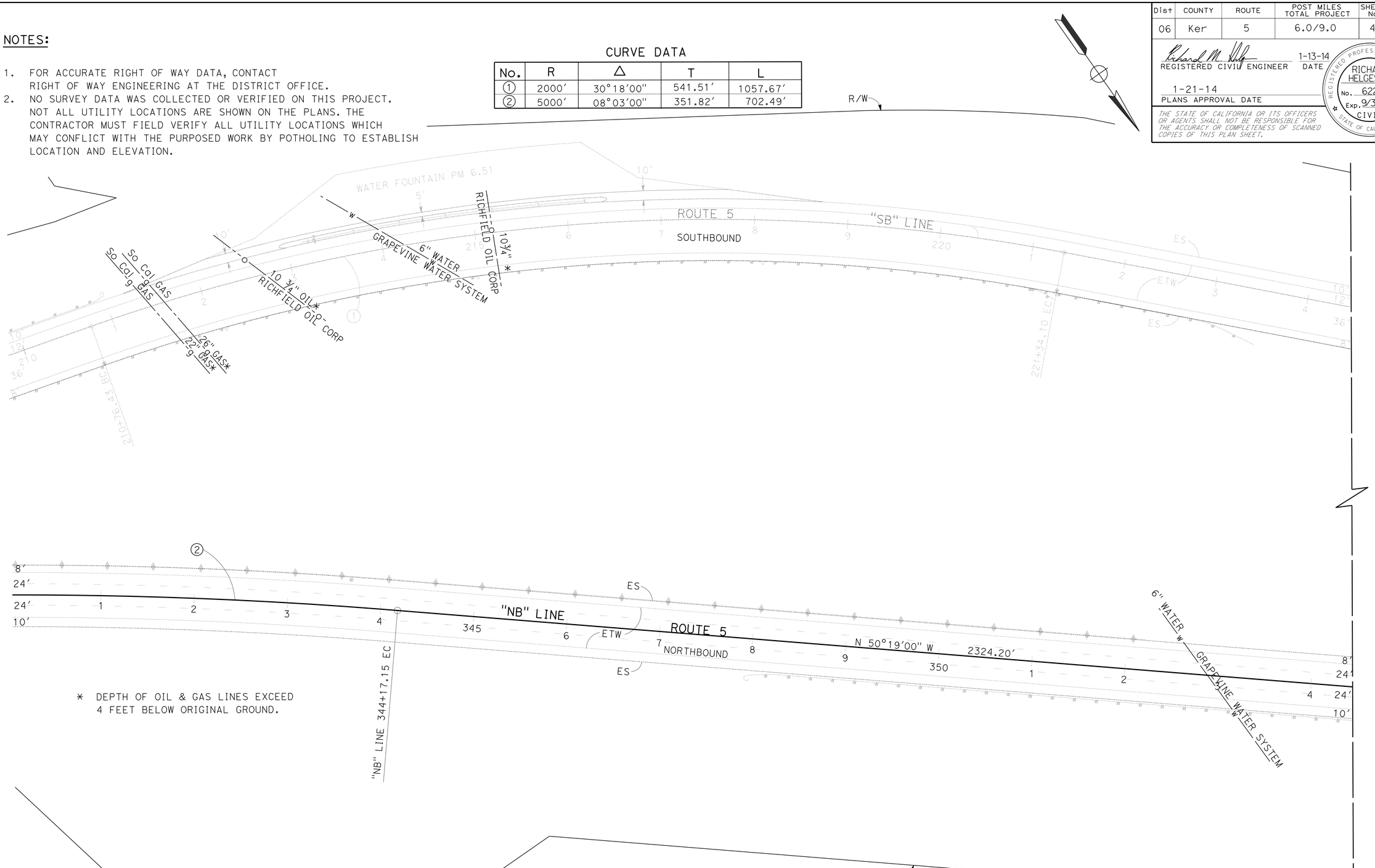

* DEPTH OF OIL & GAS LINES EXCEED 4 FEET BELOW ORIGINAL GROUND.

APPROVED FOR UTILITY INFORMATION ONLY

UTILITY PLAN

SCALE: 1=50′ **U-1**

STATE OF CALIFORNIA - DEPARTMENT OF TRANSPORTATION
Caltrans® **DESIGN**

FUNCTIONAL SUPERVISOR: RICK HELGESON
CALCULATED-DESIGNED BY: RANDY BOWLES
CHECKED BY: RICK HELGESON
REVISED BY / DATE REVISED

LAST REVISION 1-10-14 DATE PLOTTED => 27-JAN-2014 TIME PLOTTED => 16:42

Dist	COUNTY	ROUTE	POST MILES TOTAL PROJECT	SHEET No.	TOTAL SHEETS
06	Ker	5	6.0/9.0	5	43

Richard M. Helgeson 1-13-14
REGISTERED CIVIL ENGINEER DATE

1-21-14
PLANS APPROVAL DATE

REGISTERED PROFESSIONAL ENGINEER RICHARD HELGESON No. 62250 Exp. 9/30/15 CIVIL STATE OF CALIFORNIA

THE STATE OF CALIFORNIA OR ITS OFFICERS OR AGENTS SHALL NOT BE RESPONSIBLE FOR THE ACCURACY OR COMPLETENESS OF SCANNED COPIES OF THIS PLAN SHEET.

CURVE DATA

No.	R	Δ	T	L
1	3025′	27°14′17″	732.89′	1438.07′
2	3000′	42°32′00″	1168.14′	2227.91′

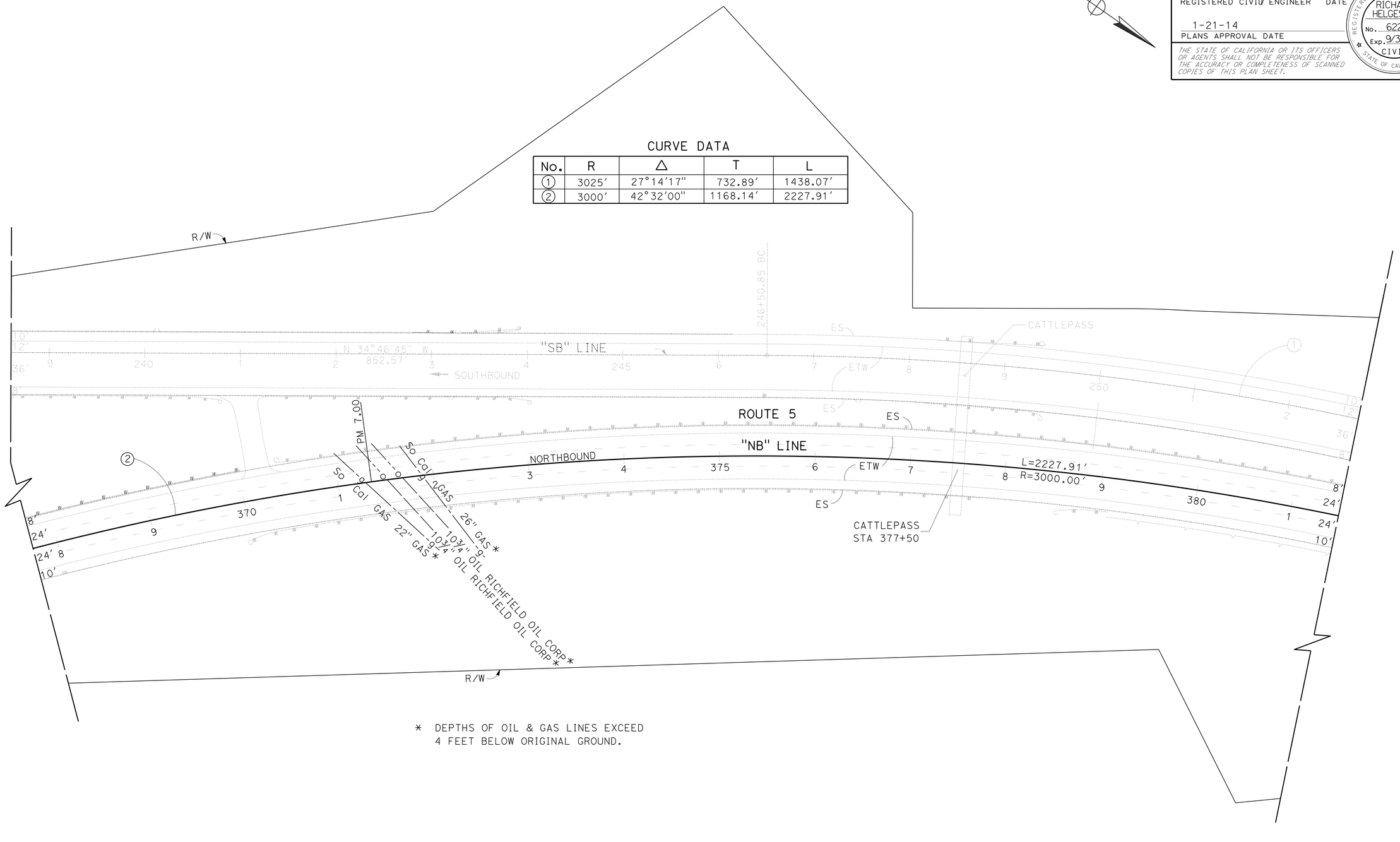

* DEPTHS OF OIL & GAS LINES EXCEED 4 FEET BELOW ORIGINAL GROUND.

APPROVED FOR UTILITY INFORMATION ONLY

UTILITY PLAN

SCALE: 1=50′ **U-2**

STATE OF CALIFORNIA - DEPARTMENT OF TRANSPORTATION
Caltrans® DESIGN

FUNCTIONAL SUPERVISOR: RICK HELGESON
CALCULATED-DESIGNED BY: RANDY BOWLES
CHECKED BY: RICK HELGESON
REVISED BY / DATE REVISED

LAST REVISION 1-10-14
DATE PLOTTED => 27-JAN-2014
TIME PLOTTED => 16:42

Dist	COUNTY	ROUTE	POST MILES TOTAL PROJECT	SHEET No.	TOTAL SHEETS
06	Ker	5	6.0/9.0	6	43

Richard M. Helgeson 1-13-14
REGISTERED CIVIL ENGINEER DATE

1-21-14
PLANS APPROVAL DATE

REGISTERED PROFESSIONAL ENGINEER RICHARD HELGESON No. 62250 Exp. 9/30/15 CIVIL STATE OF CALIFORNIA

THE STATE OF CALIFORNIA OR ITS OFFICERS OR AGENTS SHALL NOT BE RESPONSIBLE FOR THE ACCURACY OR COMPLETENESS OF SCANNED COPIES OF THIS PLAN SHEET.

CURVE DATA

No.	R	Δ	T	L
1	1600′	40°07′27"	584.32′	1120.48′
2	2500′	16°21′00"	359.14′	713.40′

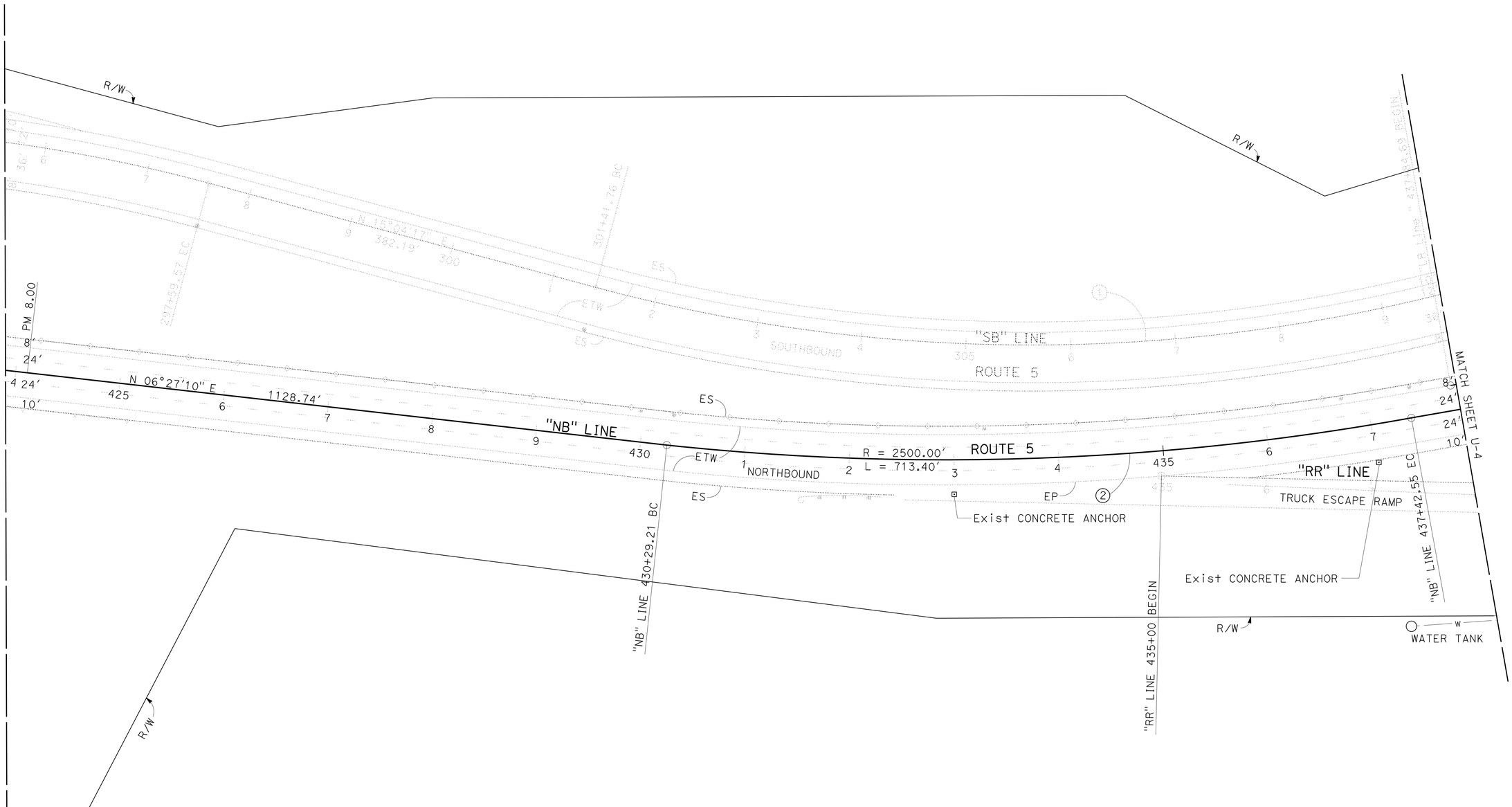

APPROVED FOR UTILITY INFORMATION ONLY

UTILITY PLAN

SCALE: 1=50′ **U-3**

STATE OF CALIFORNIA - DEPARTMENT OF TRANSPORTATION
Caltrans
DESIGN

FUNCTIONAL SUPERVISOR: RICK HELGESON
CALCULATED-DESIGNED BY: RANDY BOWLES
CHECKED BY: RICK HELGESON
REVISED BY
DATE REVISED

LAST REVISION 1-10-14
DATE PLOTTED => 27-JAN-2014
TIME PLOTTED => 16:42

Dist	COUNTY	ROUTE	POST MILES TOTAL PROJECT	SHEET No.	TOTAL SHEETS
06	Ker	5	6.0/9.0	7	43

REGISTERED CIVIL ENGINEER 1-13-14 DATE

1-21-14
PLANS APPROVAL DATE

REGISTERED PROFESSIONAL ENGINEER RICHARD HELGESON No. 62250 Exp. 9/30/15 CIVIL STATE OF CALIFORNIA

THE STATE OF CALIFORNIA OR ITS OFFICERS OR AGENTS SHALL NOT BE RESPONSIBLE FOR THE ACCURACY OR COMPLETENESS OF SCANNED COPIES OF THIS PLAN SHEET.

NOTES:

1. UTILITY INFORMATION AND ELEVATIONS SHOWN IS FROM AS-BUILT PLANS AND IS NOT VERIFIED.
2. CONTRACTOR MUST POTHOLE TO ESTABLISH UTILITY LOCATIONS AND ELEVATIONS.

CURVE DATA

No.	R	Δ	T	L
1	1600′	40°07′27"	584.32′	1120.48′
2	1500′	26°04′56"	347.44′	682.83′
3	5000′	26°10′10"	1162.13′	2283.72′

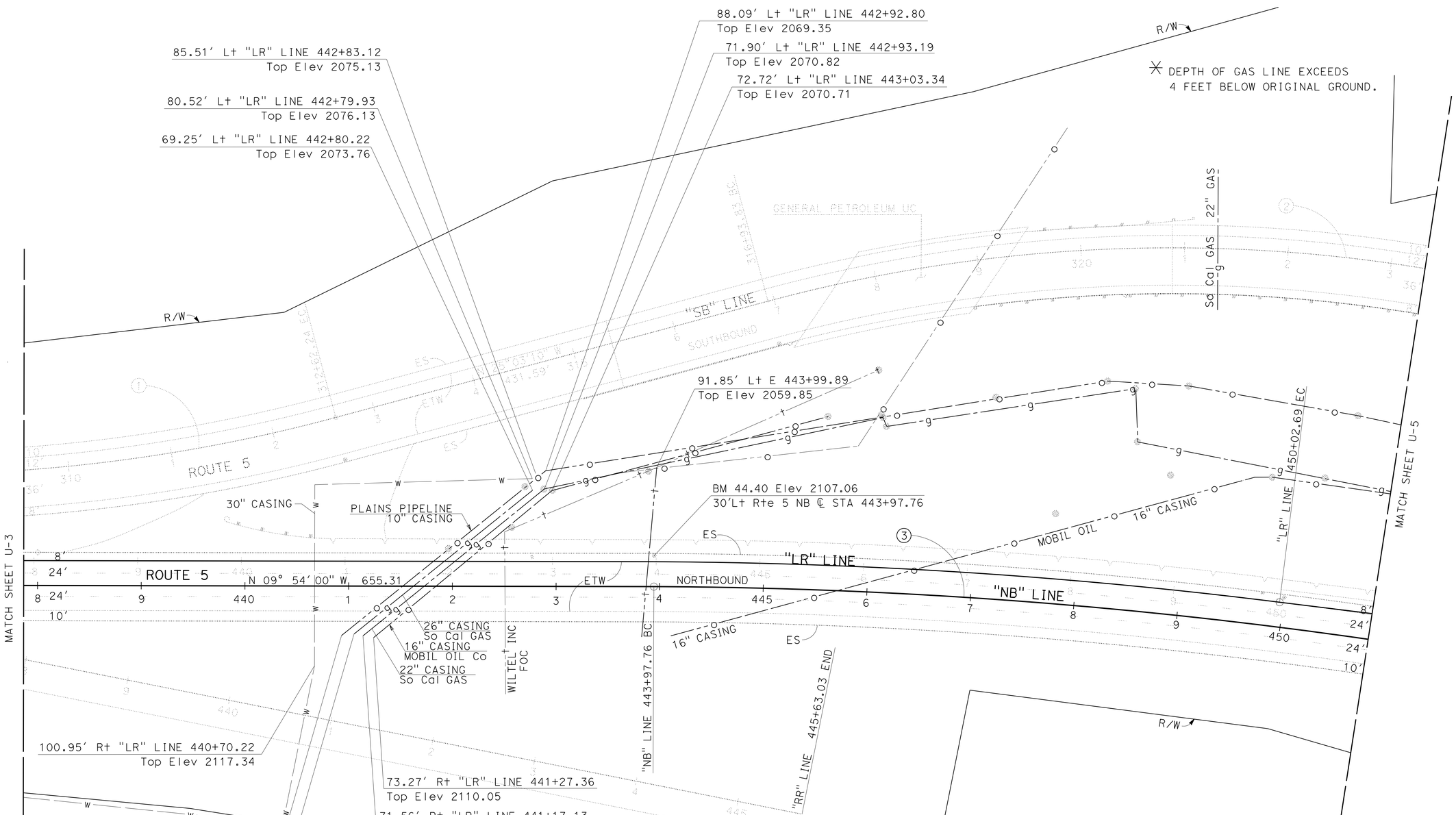

APPROVED FOR UTILITY INFORMATION ONLY

UTILITY PLAN

SCALE: 1=50′ **U-4**

REVISED BY	DATE REVISED
RANDY BOWLES	
RICK HELGESON	

CALCULATED-DESIGNED BY
CHECKED BY

FUNCTIONAL SUPERVISOR
RICK HELGESON

STATE OF CALIFORNIA - DEPARTMENT OF TRANSPORTATION
Caltrans®
DESIGN

LAST REVISION 1-10-14
DATE PLOTTED => 27-JAN-2014
TIME PLOTTED => 16:42

Dist	COUNTY	ROUTE	POST MILES TOTAL PROJECT	SHEET No.	TOTAL SHEETS
06	Ker	5	6.0/9.0	8	43

REGISTERED CIVIL ENGINEER 1-13-14 DATE

1-21-14
PLANS APPROVAL DATE

REGISTERED PROFESSIONAL ENGINEER RICHARD HELGESON No. 62250 Exp. 9/30/15 CIVIL STATE OF CALIFORNIA

THE STATE OF CALIFORNIA OR ITS OFFICERS OR AGENTS SHALL NOT BE RESPONSIBLE FOR THE ACCURACY OR COMPLETENESS OF SCANNED COPIES OF THIS PLAN SHEET.

CURVE DATA

No.	R	Δ	T	L
1	3050′	05°28′15″	145.73′	291.23′
2	5000′	25°56′00″	1151.28′	2263.11′

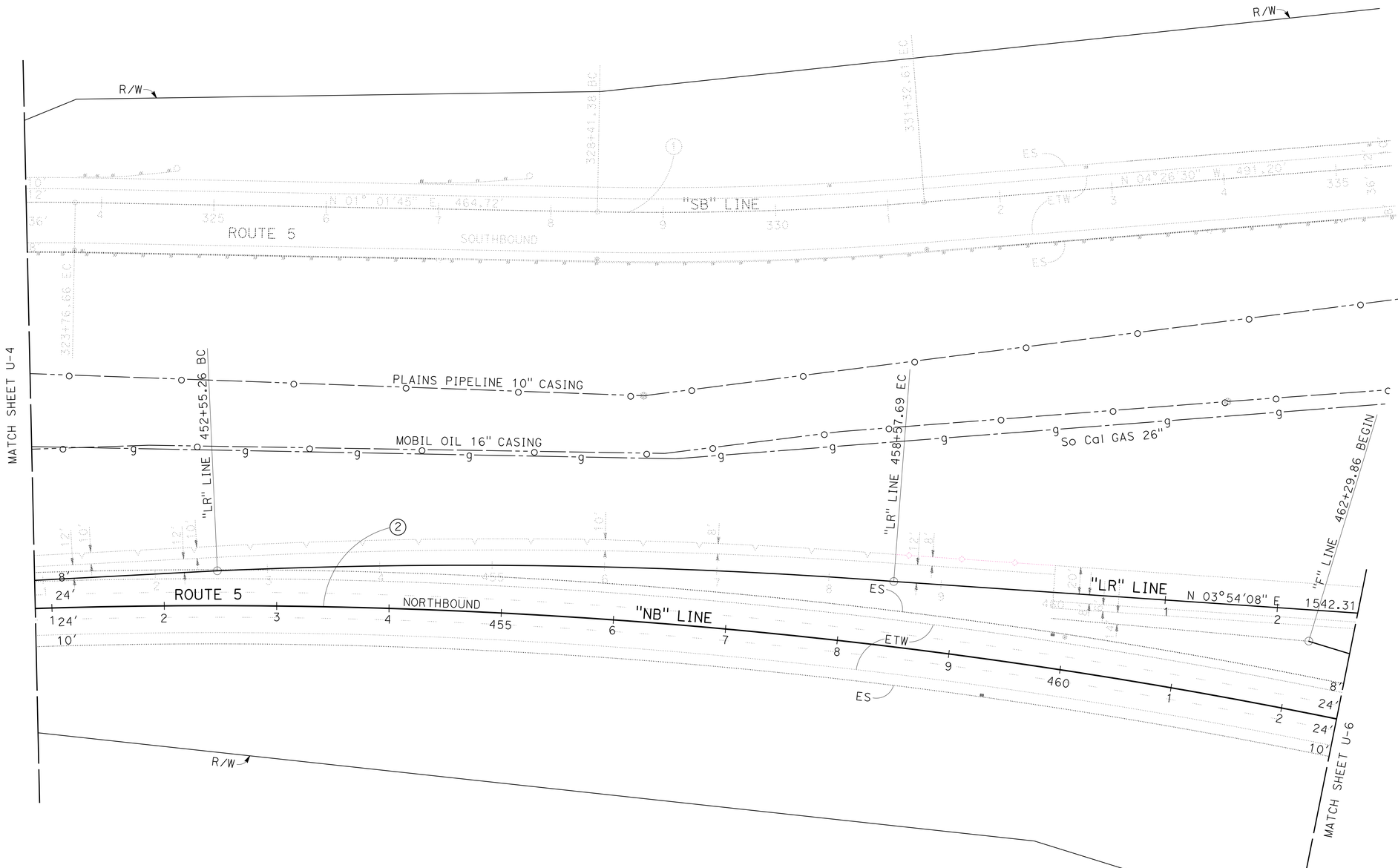

APPROVED FOR UTILITY INFORMATION ONLY

UTILITY PLAN

SCALE: 1=50′ **U-5**

STATE OF CALIFORNIA - DEPARTMENT OF TRANSPORTATION
Caltrans® DESIGN

FUNCTIONAL SUPERVISOR: RICK HELGESON
CALCULATED-DESIGNED BY: RANDY BOWLES
CHECKED BY: RICK HELGESON
REVISED BY
DATE REVISED

LAST REVISION 1-10-14 | DATE PLOTTED => 27-JAN-2014 | TIME PLOTTED => 16:42

Dist	COUNTY	ROUTE	POST MILES TOTAL PROJECT	SHEET No.	TOTAL SHEETS
06	Ker	5	6.0/9.0	9	43

Richard M. Helgeson — REGISTERED CIVIL ENGINEER — 1-13-14 DATE

1-21-14 PLANS APPROVAL DATE

REGISTERED PROFESSIONAL ENGINEER RICHARD HELGESON No. 62250 Exp. 9/30/15 CIVIL STATE OF CALIFORNIA

THE STATE OF CALIFORNIA OR ITS OFFICERS OR AGENTS SHALL NOT BE RESPONSIBLE FOR THE ACCURACY OR COMPLETENESS OF SCANNED COPIES OF THIS PLAN SHEET.

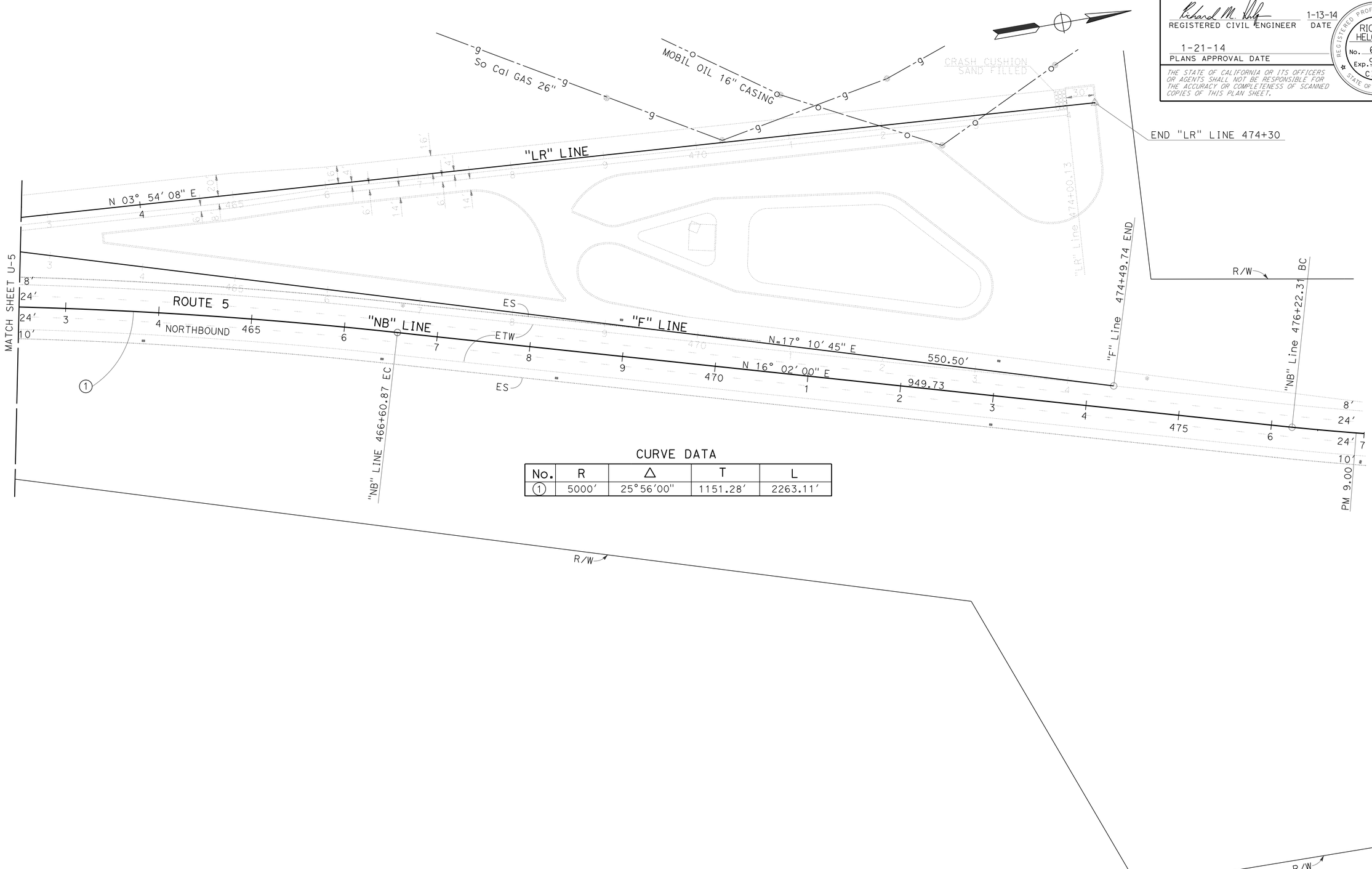

CURVE DATA

No.	R	Δ	T	L
1	5000'	25°56'00"	1151.28'	2263.11'

APPROVED FOR UTILITY INFORMATION ONLY

UTILITY PLAN

SCALE: 1=50'

U-6

STATE OF CALIFORNIA - DEPARTMENT OF TRANSPORTATION

Caltrans® **DESIGN**

FUNCTIONAL SUPERVISOR: RICK HELGESON

CALCULATED-DESIGNED BY: RANDY BOWLES

CHECKED BY: RICK HELGESON

REVISED BY / DATE REVISED

LAST REVISION 1-10-14 | DATE PLOTTED => 27-JAN-2014 | TIME PLOTTED => 16:42

Dist	COUNTY	ROUTE	POST MILES TOTAL PROJECT	SHEET No.	TOTAL SHEETS
06	Ker	5	6.0/9.0	10	43

Richard M. Helgeson 1-13-14
REGISTERED CIVIL ENGINEER DATE

1-21-14
PLANS APPROVAL DATE

REGISTERED PROFESSIONAL ENGINEER RICHARD HELGESON No. 62250 Exp. 9/30/15 CIVIL STATE OF CALIFORNIA

THE STATE OF CALIFORNIA OR ITS OFFICERS OR AGENTS SHALL NOT BE RESPONSIBLE FOR THE ACCURACY OR COMPLETENESS OF SCANNED COPIES OF THIS PLAN SHEET.

STATIONARY MOUNTED CONSTRUCTION AREA SIGNS

SIGN No.	SIGN CODE	PANEL SIZE (INCH)	SIGN MESSAGE	No. OF POST AND SIZE (INCH)	NUMBER OF SIGNS
A	W20-1	48" x 48"	ROAD WORK AHEAD	1- 4" x 6"	2
B	G20-2	48" x 18"	END ROAD WORK	2- 4" x 4"	2
C	G20-1	48" x 48"	ROAD WORK NEXT 3 MILES	1- 4" x 6"	2
D	C40 (CA)	48" x 48"	TRAFFIC FINES DOUBLED IN WORK ZONES	1- 4" x 6"	2

NOTES.

1. SIGN LOCATIONS SHOWN ARE APPROXIMATE ONLY. EXACT LOCATIONS TO BE DETERMINED BY THE ENGINEER.
2. FOR ADDITIONAL CONSTRUCTION AREA SIGNS REFER TO TRAFFIC HANDLING PLANS.

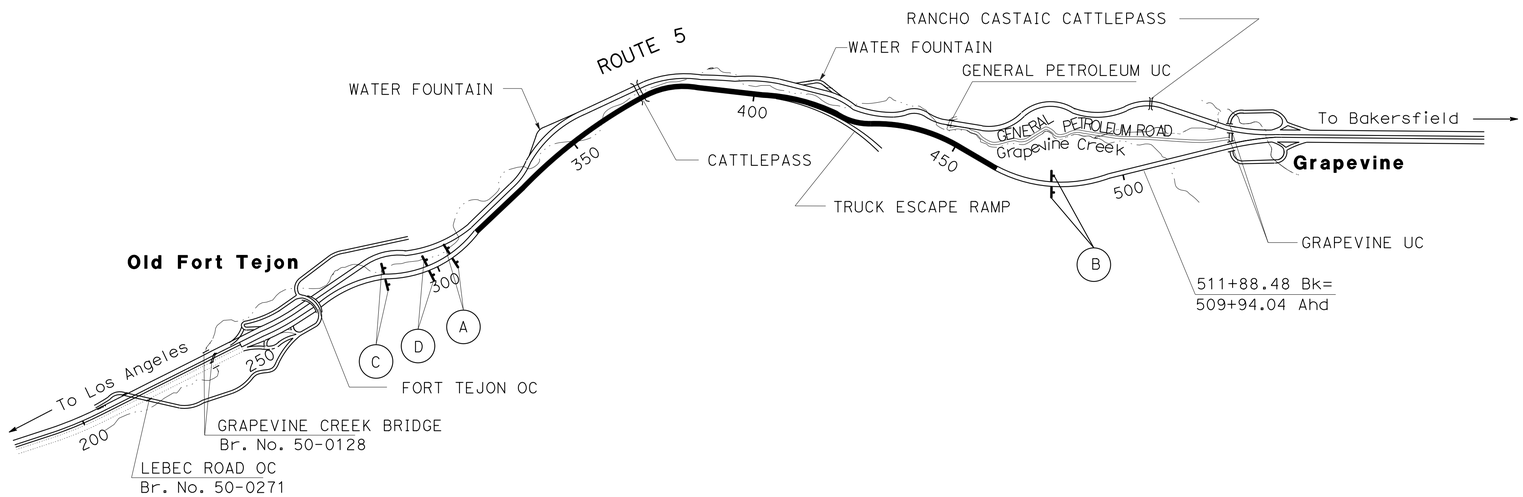

APPROVED FOR CONSTRUCTION AREA SIGN WORK ONLY

CONSTRUCTION AREA SIGNS

NO SCALE

CS-1

STATE OF CALIFORNIA - DEPARTMENT OF TRANSPORTATION
Caltrans
DESIGN

FUNCTIONAL SUPERVISOR: RICK HELGESON
CALCULATED-DESIGNED BY: RANDY BOWLES
CHECKED BY: RICK HELGESON
REVISED BY
DATE REVISED

LAST REVISION 1-10-14
DATE PLOTTED => 27-JAN-2014
TIME PLOTTED => 16:42

Dist	COUNTY	ROUTE	POST MILES TOTAL PROJECT	SHEET No.	TOTAL SHEETS
06	Ker	5	6.0/9.0	11	43

REGISTERED CIVIL ENGINEER — DATE 1-13-14

1-21-14
PLANS APPROVAL DATE

REGISTERED PROFESSIONAL ENGINEER RICHARD HELGESON No. 62250 Exp. 9/30/15 CIVIL STATE OF CALIFORNIA

THE STATE OF CALIFORNIA OR ITS OFFICERS OR AGENTS SHALL NOT BE RESPONSIBLE FOR THE ACCURACY OR COMPLETENESS OF SCANNED COPIES OF THIS PLAN SHEET.

NOTES:

1. CHANNELIZERS SHALL BE MAINTAINED THROUGHOUT THE ENTIRE CLOSURE PERIOD.
2. ALL CONES USED FOR LANE CLOSURES DURING THE HOURS OF DARKNESS SHALL BE FITTED WITH RETROREFLECTIVE BANDS (OR SLEEVES) AS SPECIFIED IN THE SPECIFICATIONS.
3. PORTABLE DELINEATORS, PLACED AT ONE-HALF THE SPACING INDICATED FOR TRAFFIC CONES MAY BE USED INSTEAD OF CONES FOR DAYTIME CLOSURES ONLY.
4. PLACE A C30(CA) SIGN EVERY 2000′ THROUGHOUT LENGTH OF SHOULDER CLOSURE.
5. A MINIMUM OF 3 CONES SHALL BE PLACED TRANSVERSELY ACROSS THE CLOSED SHOULDER EVERY 2000′ Max. TWO TYPE II BARRICADES MAY BE USED INSTEAD OF THE 3 CONES.
6. A W7-3AP "NEXT ____ MILES" PLAQUE MUST BE USED IF THE SHOULDER CLOSURE EXTENDS BEYOND THE DISTANCE THAT CAN BE PERCEIVED BY ROAD USERS.

LEGEND:

- WORK AREA
- TRAFFIC CONE
- TRAFFIC CONE (OPTIONAL TAPER)
- TEMPORARY TRAFFIC CONTROL SIGN
- LL — LANE LINE
- PORTABLE FLASHING BEACON

SIGN PANEL SIZE (Min)

- A — 48" x 48"
- B — 72" x 60"
- C — 36" x 30"

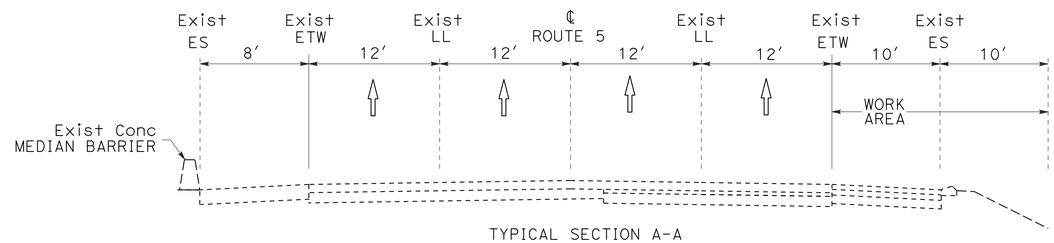

TYPICAL SECTION A-A

ROUTE 5 NORTHBOUND
PM 6.0/9.0

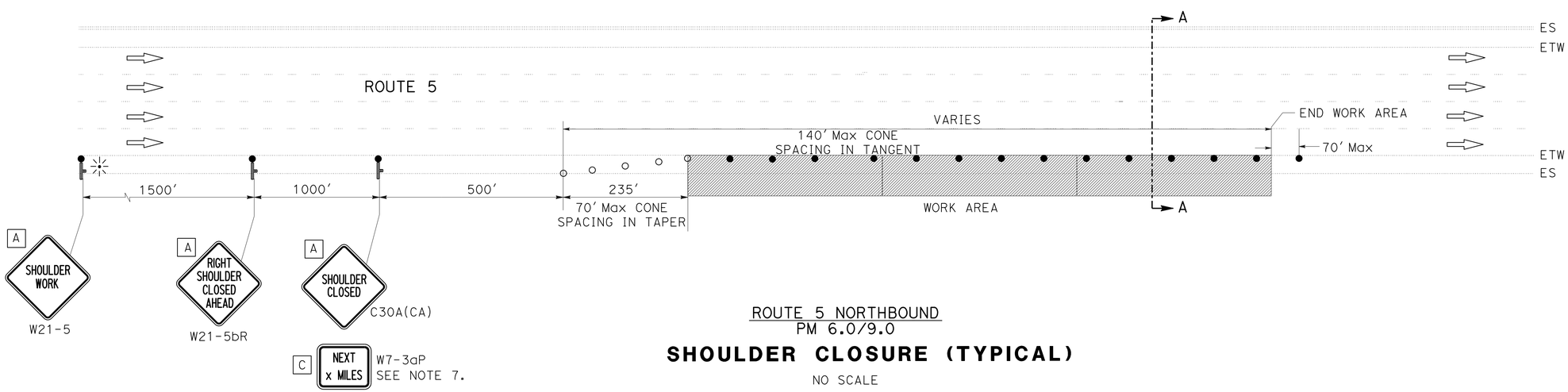

ROUTE 5 NORTHBOUND
PM 6.0/9.0

SHOULDER CLOSURE (TYPICAL)

NO SCALE

APPROVED FOR TRAFFIC HANDLING WORK ONLY

TRAFFIC HANDLING PLAN

NO SCALE

TH-1

STATE OF CALIFORNIA - DEPARTMENT OF TRANSPORTATION
DESIGN
FUNCTIONAL SUPERVISOR: RICK HELGESON
CALCULATED-DESIGNED BY: RANDY BOWLES
CHECKED BY: RICK HELGESON
REVISED BY / DATE REVISED

LAST REVISION 1-10-14
DATE PLOTTED => 27-JAN-2014
TIME PLOTTED => 16:42

Dist	COUNTY	ROUTE	POST MILES TOTAL PROJECT	SHEET No.	TOTAL SHEETS
06	Ker	5	6.0/9.0	12	43

REGISTERED CIVIL ENGINEER 1-13-14 DATE

1-21-14
PLANS APPROVAL DATE

REGISTERED PROFESSIONAL ENGINEER RICHARD HELGESON No. 62250 Exp. 9/30/15 CIVIL STATE OF CALIFORNIA

THE STATE OF CALIFORNIA OR ITS OFFICERS OR AGENTS SHALL NOT BE RESPONSIBLE FOR THE ACCURACY OR COMPLETENESS OF SCANNED COPIES OF THIS PLAN SHEET.

NOTE:

FOR ACCURATE RIGHT OF WAY DATA, CONTACT RIGHT OF WAY ENGINEERING AT THE DISTRICT OFFICE.

CURVE DATA

No.	R	Δ	T	L
1	1820′	15°58′00″	255.24′	507.18′
2	5000′	08°03′00″	351.82′	702.49′

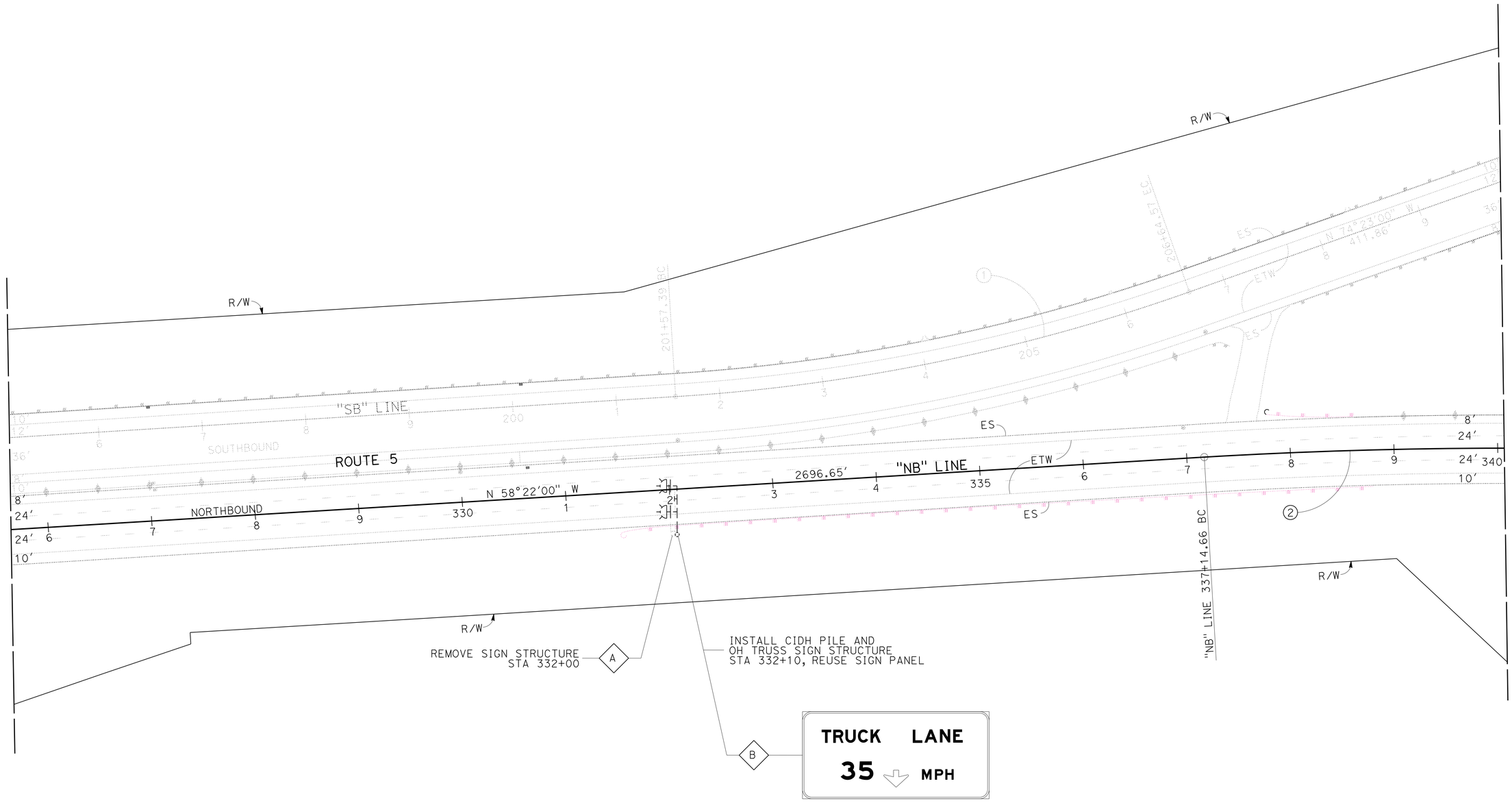

APPROVED FOR SIGN WORK ONLY

SIGN PLAN

SCALE: 1=50′ **S-1**

STATE OF CALIFORNIA - DEPARTMENT OF TRANSPORTATION
Caltrans
DESIGN

FUNCTIONAL SUPERVISOR: RICK HELGESON
CALCULATED-DESIGNED BY: RANDY BOWLES
CHECKED BY: RICK HELGESON
REVISED BY
DATE REVISED

LAST REVISION 1-10-14
DATE PLOTTED => 27-JAN-2014
TIME PLOTTED => 16:42

Dist	COUNTY	ROUTE	POST MILES TOTAL PROJECT	SHEET No.	TOTAL SHEETS
06	Ker	5	6.0/9.0	13	43

REGISTERED CIVIL ENGINEER 1-13-14 DATE

1-21-14
PLANS APPROVAL DATE

REGISTERED PROFESSIONAL ENGINEER RICHARD HELGESON No. 62250 Exp. 9/30/15 CIVIL STATE OF CALIFORNIA

THE STATE OF CALIFORNIA OR ITS OFFICERS OR AGENTS SHALL NOT BE RESPONSIBLE FOR THE ACCURACY OR COMPLETENESS OF SCANNED COPIES OF THIS PLAN SHEET.

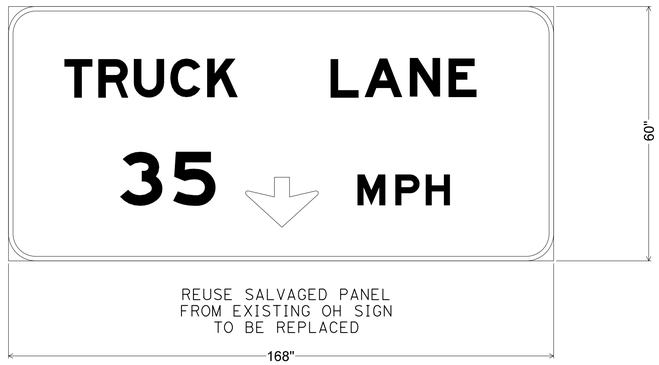

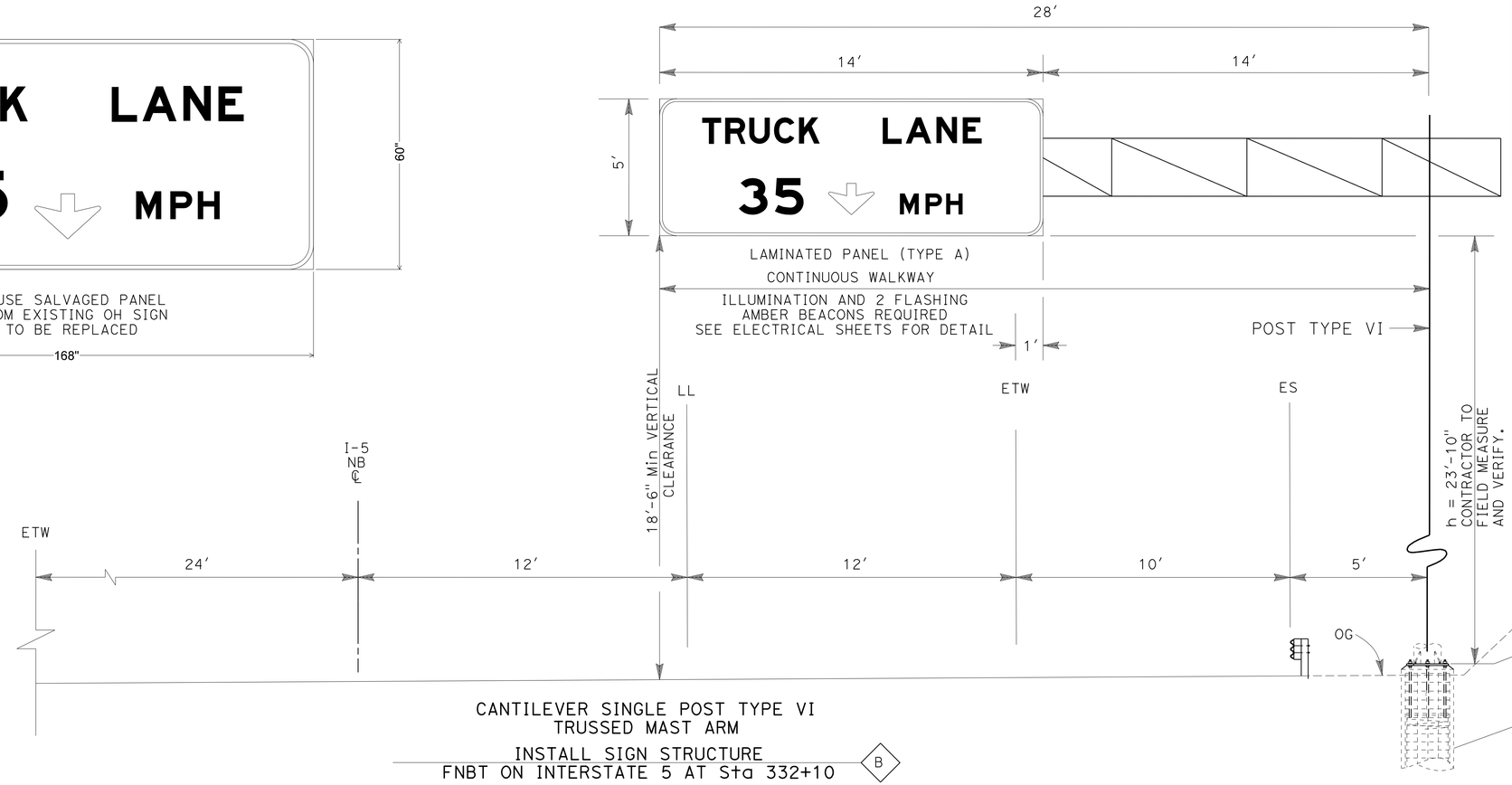

NOTES:

1. FABRICATION DETAILS IN STANDARD PLANS 2010 INCLUDING S-1 TO S-8.
2. BASE PLATE ELEVATIONS TO BE SET IN THE FIELD TO PROVIDE A VERTICAL CLEARANCE OF 18'-6" MINIMUM FROM BOTTOM OF FRAME OR LIGHTING FIXTURE TO THE ROADBED.
3. "H" AND BASE PLATE ELEVATIONS ARE FOR QUANTITIES ONLY AND ARE SUBJECTED TO CHANGE BASED ON NOTE 1.
4. THE CONTRACTOR SHALL VERIFY ALL FIELD CONTROLLING DIMENSIONS BEFORE ORDERING OR FABRICATING ANY MATERIAL.

OVERHEAD SIGN STRUCTURE QUANTITIES

SHEET No.	SIGN No.	LOCATION	SIGN MESSAGE	PANEL SIZE FT x FT	SINGLE FACED	OVERHEAD SIGN PANEL: BACKGROUND SHEETING COLOR	BACKGROUND RETROREFLECTIVITY ASTM TYPE	LEGEND SHEETING COLOR	LEGEND RETROREFLECTIVITY ASTM TYPE	GRAFFITI FLOW PREMIUM	FURNISH SIGN STRUCTURE (TRUSS) LB	INSTALL SIGN STRUCTURE (TRUSS) LB	60" CAST-IN-DRILLED -HOLE CONCRETE PILE (SIGN FOUNDATION) LF	REMOVE SIGN STRUCTURE EA	REMARKS
S-1	A	STA 332+00 "NB" Line	TRUCK LANE 35 ↓ MPH	5' x 14'										1	REUSE SIGN PANEL SALVAGE SIGN STRUCTURE
S-1	B	STA 332+10 "NB" Line	TRUCK LANE 35 ↓ MPH	5' x 14'	X	WHITE	X	BLACK	X	X	14840	14840	22		
										TOTAL	14840	14840	22	1	

[N] NOT A SEPARATE PAY ITEM - FOR INFORMATION ONLY

APPROVED FOR SIGN WORK ONLY

NO SCALE

OVERHEAD SIGN DETAILS AND QUANTITIES

SD-1

REVISED BY	DATE REVISED

CALCULATED-DESIGNED BY: RANDY BOWLES
CHECKED BY: RICK HELGESON
FUNCTIONAL SUPERVISOR: RICK HELGESON

STATE OF CALIFORNIA - DEPARTMENT OF TRANSPORTATION
Caltrans
DESIGN

Dist	COUNTY	ROUTE	POST MILES TOTAL PROJECT	SHEET No.	TOTAL SHEETS
06	Ker	5	6.0/9.0	14	43

REGISTERED ELECTRICAL ENGINEER 12-12-13 DATE

1-21-14 PLANS APPROVAL DATE

REGISTERED PROFESSIONAL ENGINEER DANIEL THANH VO No. 17408 Exp 9-30-14 ELECTRICAL STATE OF CALIFORNIA

THE STATE OF CALIFORNIA OR ITS OFFICERS OR AGENTS SHALL NOT BE RESPONSIBLE FOR THE ACCURACY OR COMPLETENESS OF SCANNED COPIES OF THIS PLAN SHEET.

LEGEND:

1 RS Exist FLASHING BEACON AND SIGN ILLUMINATION.

2 2"C, 2#4 (SIGN No. 6.252), 2#6 (FB)

3 RS Exist EMS, RS Exist SING ILLUMINATION, RS Exist NEMA ENCLOSURES AND TRANSFORMERS ON SIGN POST. INSTALL EMS WITH TYPE SC1A CONTROL AS SHOWN ON SHEET SES, AND INSTALL 2-ISL WITH TYPE SC2A CONTROL.

4 2"C, 2#4 (SIGN No. 6.252), 2#6 (FB), 2#6 (SIGN No. 6.718), 2#8 (EMS D)

5 Exist 2"C, RC 4#8 (EMS, SIGN), ADD 2#6 (SIGN No.6.901), 2#8 (EMS E)

6 2"C, 2#4 (SIGN No. 6.252), 2#6 (FB), 2#6 (SIGN No. 6.718), 2#6 (SIGN No. 6.901), 2#8 (EMS D), 2#8 (EMS E)

7 INSTALL CONDUIT IN PAVED AREA. AT THE OPTION OF THE CONTRACTOR, CONDUIT MAY BE INSTALLED BY THE TRENCHING IN PAYVEMENT METHOD EXCEPT THAT CONDUIT DEPTH MUST BE NOT LESS THAN 30 INCHES BELOW FINISHED GRADE.

8 120/240 V, 1ø, 3 WIRE, TYPE III-BF SERVICE EQUIPMENT ENCLOSURE WITH THE FOLLOWING CIRCUIT BREAKERS:
CTID No. (06500050007442)

AMPERES	VOLTS	POLES	NAMEPLATE	METER	PHOTOELECTRIC CONTROL TYPE
100	240	2	MAIN DISCONNECT	YES	———
30	240	2	SIGN ILLUMINATION (No. 6.252)	YES	V
30	240	2	SIGN ILLUMINATION (No. 6.718 AND No. 7.502)	YES	V
30	240	2	SIGN ILLUMINATION (No. 6.901 AND No. 7.787)	YES	* V
20	120	1	FLASHING BEACON	YES	———
15	120	1	PEU SIGN ILLUMINATION CONTROL (No. 6.252)	YES	———
15	120	1	PEU SIGN ILLUMINATION CONTROL (No. 6.718 AND 7.502)	YES	———
15	120	1	EMS D AND F	YES	SC1A
15	120	1	EMS E AND G	YES	SC1A
30	120	1	EMS CONTROLLER CABILNET	YES	
		2	SPACE	YES	

* SHARE PEU WITH SIGN No. 6.718 AND No. 7.501

9 PULL BOX PER PG&E REQUIREMENT.

10 EXIST 2"C, 3#2 (SERVICE)

11 3"C, INSTALL REUSED 3#2 (SERVICE),

12 3"C, 2#6 (CONTROLLER CABINET), 2#4 (SIGN NO.6.252), 2#6 (SIGN NO. 6.718 AND SIGN NO. 7.502), 2#6 (SIGN NO. 6.901 AND SIGN NO. 7.787), 2#6 (FB), 2#8 (EMS D AND EMS F), 2#8 (EMS E AND EMS G)

13 FURNISHED AND INSTALL MODEL 334L CABINET AND WIRELESS MODEM, FOR EMS INSTALL DF SMART RELAYS AND EoDSL MODEMS AS SHOWN ON SHEET E-14.

14 3"C, 2 SIC, 2#8 (EMS D AND EMS F), 2#8 (EMS E AND EMS G)

15 3"C, 2#8 (EMS D AND EMS F), 2#8 (EMS E AND EMS G)

16 2"C, 2#6 (SIGN NO. 7.502), 2#6 (SIGN NO. 7.787), 2#8 (EMS F), 2#8 (EMS G), 2 SIC

17 2"C, 2#6 (SIGN NO. 7.787), 2#8 (EMS G)

18 EXIST 2"C, RC 4#8 (EMS, SIGN), ADD 2#6 (SIGN NO.7.787), 2#8 (EMS G)

19 2"C, 1 SIC

20 2"C, 2#8 (SIGN NO. 8.212, 2#8 (EMS H), 1 SIC

ABBREVIATIONS:

PDA	POWER DISTRIBUTION ASSEMBLY
EoVDSL	ETHERNET OVER VERY HIGH BIT-RATE DIGITAL SUBSCRIBER LINE MODEM
PG&E	PACIFIC GAS AND ELECTRIC COMPANY
DF	DEPARTMENT FURNISHED
CAT-5E	CATEGORY 5 ENHANCED CABLE

21 MODIFY 120/240 V, 1ø, 3-WIRE, TYPE III-AF SERVICE EQUIPMENT ENCLOSURE TO BE USED AS SUBPANEL WITH THE FOLLOWING CIRCUIT BREAKERS:
CTID No. (06500050007462)

AMPERES	VOLTS	POLES	NAMEPLATE	METER	PHOTOELECTRIC CONTROL TYPE
60	240	2	MAIN DISCONNECT	NO	———
30	240	2	SIGN ILLUMINATION (No. 8.212)	NO	V
50	120	1	EMS CONTROLLER CABINET	NO	———
15	120	1	EMS H	NO	SC1A
15	120	1	SMART RELAY	NO	———
15	120	1	PEU SIGN ILLUMINATION CONTROL (No. 8.212)	NO	———
		2	SPACE		

22 3"C, 2#8 (SIGN NO. 8.212, 2#5 (EMS H), 2#6 (334 CABINET)

23 2"C, 2#8 (EMS H), 1 SIC

24 EXIST 2"C, RC 2#8 (CCTV CABINET), RC 2#12 (EMS CONTROL), ADD 2#8 (CCTV CABINET), 2#8 (EMS H)

25 EXIST 2"C, 1-HYBRID CABLE, 1 DLC, 1 CAT 5, ADD 1-HYBRID CABLE, 2#10 (EMS H), 1 CAT-5E, 1 SIC

26 MODEL 334L CABINET INSTALL DF SMART RELAYS AND EoVDSL MODEMS AS SHOWN ON SHEET E-14.

27 EXIST 2"C, 1-HYBRID CABLE, 1 DLC, 1 CAT 5E, ADD 1-HYBRID CABLE, CAT-5E

28 3"C, 3#2 (SUB PANEL), 1 SIC

29 2"C, 3#2 (SUB PANEL), 1 SIC

30 EXIST 2"C, RC 2#6 (SIGN), RC 2#8 (EMS), RC 2#12 (EMS CONTROL), ADD 2#6 (SIGN NO. 8.315 AND NO. 8.411), 2#8 (EMS J AND EMS K), 3#2 (SUB PANEL), 1 SIC

31 EXIST 2"C, RC 1 DLC, RC 2#6 (SIGN), RC 2#8 (EMS), RC 2#12 (EMS CONTROL), 2#8 (LTG), ADD 2#6 (SIGN NO. 8.315 AND 8.411), 2#8 (EMS J AND EMS K), 3#2 (SUB PANEL), 1 SIC, 1 DLC

32 EXIST 2"C, RC 2 DLC, RC 2#6 (SIGN), RC 2#8 (EMS), RC 2#12 (EMS CONTROL), 2#8 (LTG), ADD 2#6 (SIGN NO. 8.315 AND SIGN NO. 8.411), 2#8 (EMS J AND EMS K), 3#2 (SUB PANEL), 1 SIC, 2 DLC

33 EXIST 2"C, REMOVE AND REUSE 2#6 (CABINET)

34 EXIST 2"C, RC 2 DLC, RC 2#6 (SIGN), RC 2#8 (EMS), 2#8 (LTG), ADD 2#6 (SIGN NO. 8.315 AND SING NO. 8.411), 3#2 (SUB PANEL), 1 SIC, 2 DLC, RL 2#6 (CABINET)

35 EXIST 2"C, RC 2 DLC, RC 2#6 (SIGN), RC 2#8 (EMS), RC 2#12 (EMS CONTROL), 1-CAT 5E, 1-HYBRID CABLE, ADD 2#6 (SIGN NO. 8.315 AND SIGN NO. 8.411), 2#8 (EMS J AND EMS K), 3#2 (SUB PANEL), 1 SIC, 2 DLC, REUSE 2#6 (CABINET), 1-HYBRID CABLE, 1 CAT-5E

TRAFFIC OPERATION SYSTEM
E-1

REVISED BY | DATE REVISED
DANIEL VO | MONA ATTALLAH
CALCULATED-DESIGNED BY | CHECKED BY
FUNCTIONAL SUPERVISOR: ALI BAKHDOUD

STATE OF CALIFORNIA - DEPARTMENT OF TRANSPORTATION
Caltrans ELECTRICAL DESIGN

LAST REVISION 12-12-13 | DATE PLOTTED => 11-FEB-2014 | TIME PLOTTED => 09:35

Dist	COUNTY	ROUTE	POST MILES TOTAL PROJECT	SHEET No.	TOTAL SHEETS
06	Ker	5	6.0/9.0	15	43

REGISTERED ELECTRICAL ENGINEER 12-12-13 DATE

1-21-14
PLANS APPROVAL DATE

REGISTERED PROFESSIONAL ENGINEER DANIEL THANH VO No. 17408 Exp. 9-30-14 ELECTRICAL STATE OF CALIFORNIA

THE STATE OF CALIFORNIA OR ITS OFFICERS OR AGENTS SHALL NOT BE RESPONSIBLE FOR THE ACCURACY OR COMPLETENESS OF SCANNED COPIES OF THIS PLAN SHEET.

LEGEND:

36 EXIST 3-2"C, RC 2#6 (SIGN), RC 4#8 (EMS), 2#8 (LTG), 2#6 (CABINET), 3#8 (CLARIFIER PUMP), 2#12 (IRRIGATION CABINET), ADD 2#6 (SIGN NO. 8.315 AND SIGN NO. 8.411), 3#2 (SUB PANEL), 1 SIC, 2 DLC

37 EXIST 2"C, 1-HYBRID CABLE, 1 DLC, 1 CAT-5E, ADD 1-HYBRID CABLE, 1 CAT-5E

38 EXIST MODEL 334L, CABINET INSTALL WIRELESS MODEM, AND DF EMS CONTROL SYSTEM AS SHOWN ON SHEET E-14.

39 Exist 120/240V, 1Ø, 3 WIRE, TYPE III-BF SERVICE EQUIPMENT ENCLOSURE WITH THE FOLLOWING CIRCUIT BREAKERS:
CTID NO. (06500050008774)

AMPERES	VOLTS	POLES	NAMEPLATE	METER	PHOTOELECTRIC CONTROL TYPE
100	240	4	MAIN BREAKER	YES-NO	———
30	240	2	SIGN ILLUMINATION	NO	V
40	240	2	HIGHWAY LIGHTING	NO	V
15	120	1	PEU	NO	———
15	120	1	PEU	NO	———
15	120	1	EMS	YES	44
15	120	1	LOGO RELAY	YES	45
50	240	2	SUBPANEL	YES	46
20	120	1	ICC	YES	———
50	240	2	CLARIFIER PUMP STATION	YES	———
50	120	1	CONTROLLER CABINET	YES	———
———	———	2	SPACE	———	———

40 TYPE CCTV 25 POLE WITH CAMERA ASSEMBLY.

41 TO CLARIFIER PUMP STATION

42 2"C, 1-HYBRID CABLE, 1 CAT-5E

43 SEE SHEET SD-1 FOR SIGN DETAILS.

44 RC Exist 40 A CB, INSTALL 15 A CB AND RELABLE NAME PLATE.

45 RC Exist 40 A CB, INSTALL 15 A CB AND RELABLE NAME PLATE.

46 INSTALL 50 A CB AND NAME PLATE WITH LABLE AS SHOWN.

TRAFFIC OPERATION SYSTEM
E-2

REVISED BY | DATE REVISED
DANIEL VO | MONA ATTALLAH
CALCULATED-DESIGNED BY | CHECKED BY
FUNCTIONAL SUPERVISOR: ALI BAKHDOUD
STATE OF CALIFORNIA - DEPARTMENT OF TRANSPORTATION
Caltrans® ELECTRICAL DESIGN

LAST REVISION 12-12-13 | DATE PLOTTED => 27-JAN-2014 | TIME PLOTTED => 16:42

Dist	COUNTY	ROUTE	POST MILES TOTAL PROJECT	SHEET No.	TOTAL SHEETS
06	Ker	5	6.0/9.0	16	43

REGISTERED ELECTRICAL ENGINEER 12-12-13 DATE

1-21-14
PLANS APPROVAL DATE

REGISTERED PROFESSIONAL ENGINEER DANIEL THANH VO No. 17408 Exp 9-30-14 ELECTRICAL STATE OF CALIFORNIA

THE STATE OF CALIFORNIA OR ITS OFFICERS OR AGENTS SHALL NOT BE RESPONSIBLE FOR THE ACCURACY OR COMPLETENESS OF SCANNED COPIES OF THIS PLAN SHEET.

NOTE:

FOR ACCURATE RIGHT OF WAY DATA, CONTACT
RIGHT OF WAY ENGINEERING AT THE DISTRICT OFFICE.

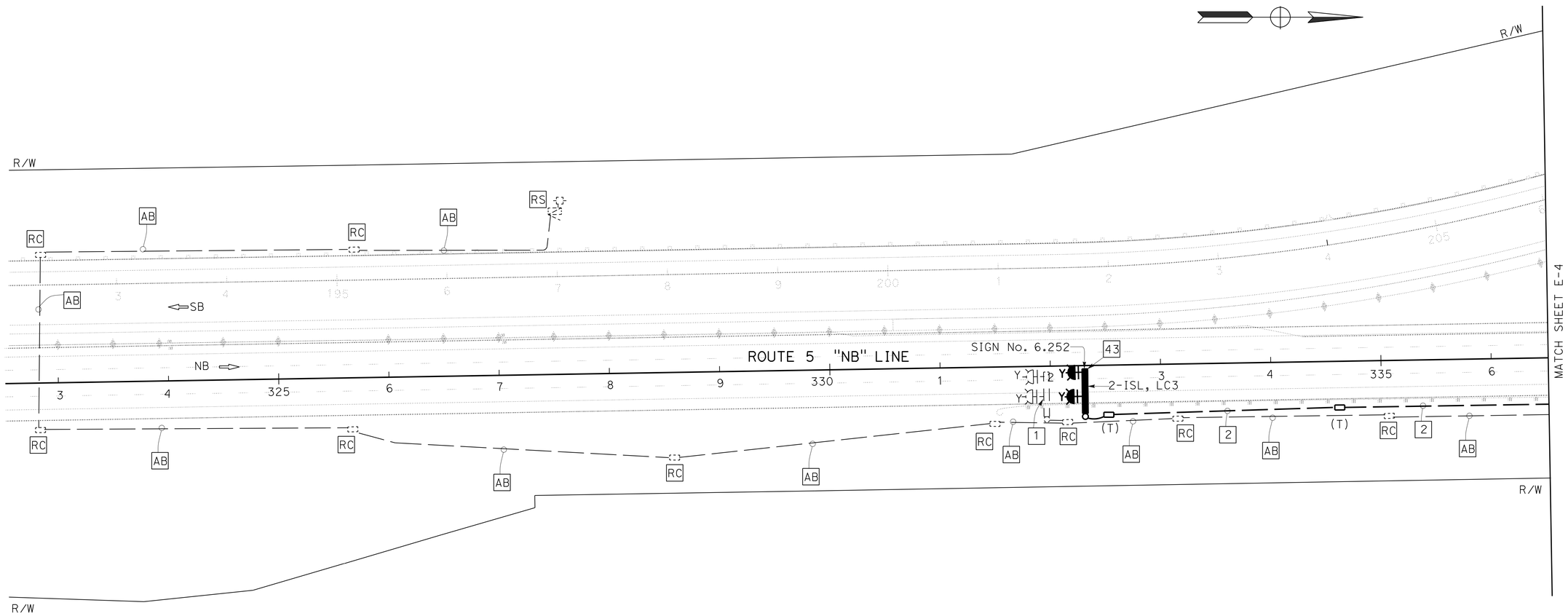

TRAFFIC OPERATION SYSTEM

E-3

SCALE: 1" = 50'

APPROVED FOR ELECTRICAL WORK ONLY

REVISED BY	DATE REVISED

CALCULATED-DESIGNED BY	CHECKED BY
DANIEL VO	MONA ATTALLAH

FUNCTIONAL SUPERVISOR: ALI BAKHDOUD

STATE OF CALIFORNIA - DEPARTMENT OF TRANSPORTATION
Caltrans® ELECTRICAL DESIGN

LAST REVISION 12-12-13 | DATE PLOTTED => 27-JAN-2014 TIME PLOTTED => 16:42

Dist	COUNTY	ROUTE	POST MILES TOTAL PROJECT	SHEET No.	TOTAL SHEETS
06	Ker	5	6.0/9.0	17	43

REGISTERED ELECTRICAL ENGINEER — DATE 12-12-13

1-21-14
PLANS APPROVAL DATE

REGISTERED PROFESSIONAL ENGINEER — DANIEL THANH VO — No. 17408 — Exp. 9-30-14 — ELECTRICAL — STATE OF CALIFORNIA

THE STATE OF CALIFORNIA OR ITS OFFICERS OR AGENTS SHALL NOT BE RESPONSIBLE FOR THE ACCURACY OR COMPLETENESS OF SCANNED COPIES OF THIS PLAN SHEET.

NOTE:

FOR ACCURATE RIGHT OF WAY DATA, CONTACT RIGHT OF WAY ENGINEERING AT THE DISTRICT OFFICE.

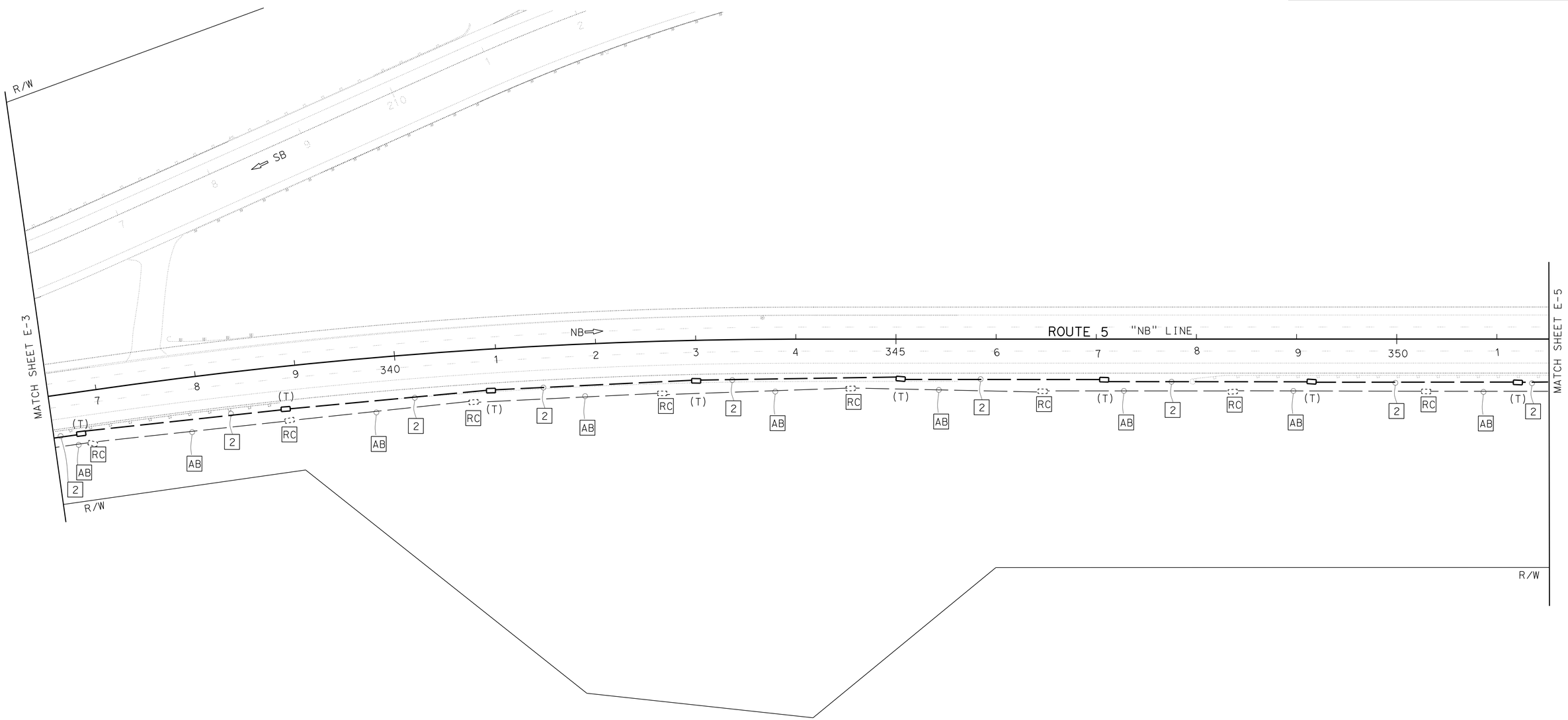

TRAFFIC OPERATION SYSTEM

E-4

SCALE: 1" = 50'

APPROVED FOR ELECTRICAL WORK ONLY

STATE OF CALIFORNIA - DEPARTMENT OF TRANSPORTATION
Caltrans® ELECTRICAL DESIGN

FUNCTIONAL SUPERVISOR: ALI BAKHDOUD
CALCULATED-DESIGNED BY: DANIEL VO
CHECKED BY: MONA ATTALLAH
REVISED BY
DATE REVISED

LAST REVISION 12-12-13
DATE PLOTTED => 27-JAN-2014
TIME PLOTTED => 16:42

Dist	COUNTY	ROUTE	POST MILES TOTAL PROJECT	SHEET No.	TOTAL SHEETS
06	Ker	5	6.0/9.0	18	43

REGISTERED ELECTRICAL ENGINEER 12-12-13 DATE

1-21-14
PLANS APPROVAL DATE

REGISTERED PROFESSIONAL ENGINEER DANIEL THANH VO No. 17408 Exp 9-30-14 ELECTRICAL STATE OF CALIFORNIA

THE STATE OF CALIFORNIA OR ITS OFFICERS OR AGENTS SHALL NOT BE RESPONSIBLE FOR THE ACCURACY OR COMPLETENESS OF SCANNED COPIES OF THIS PLAN SHEET.

NOTE:

FOR ACCURATE RIGHT OF WAY DATA, CONTACT RIGHT OF WAY ENGINEERING AT THE DISTRICT OFFICE.

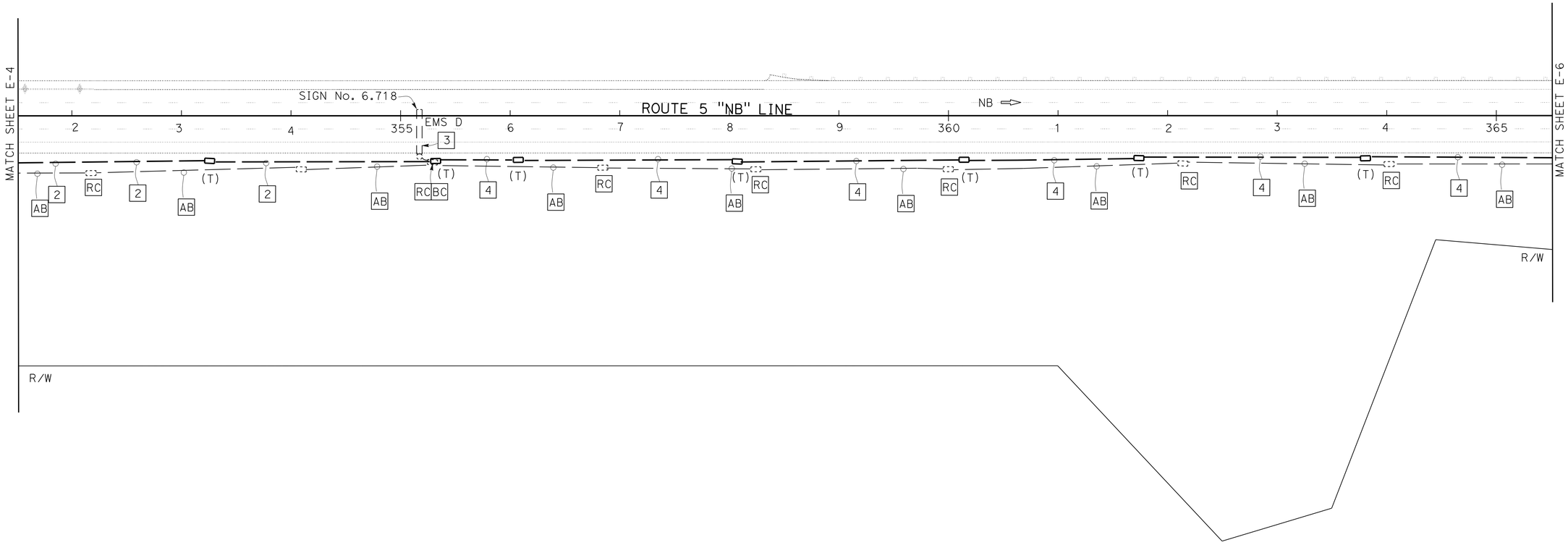

TRAFFIC OPERATION SYSTEM

E-5

SCALE: 1" = 50'

APPROVED FOR ELECTRICAL WORK ONLY

STATE OF CALIFORNIA - DEPARTMENT OF TRANSPORTATION
Caltrans® ELECTRICAL DESIGN

FUNCTIONAL SUPERVISOR: ALI BAKHDOUD
CALCULATED-DESIGNED BY: DANIEL VO
CHECKED BY: MONA ATTALLAH
REVISED BY
DATE REVISED

LAST REVISION 12-12-13 | DATE PLOTTED => 27-JAN-2014 | TIME PLOTTED => 16:42

Dist	COUNTY	ROUTE	POST MILES TOTAL PROJECT	SHEET No.	TOTAL SHEETS
06	Ker	5	6.0/9.0	19	43

REGISTERED ELECTRICAL ENGINEER — DATE 12-12-13

1-21-14
PLANS APPROVAL DATE

REGISTERED PROFESSIONAL ENGINEER — DANIEL THANH VO — No. 17408 — Exp. 9-30-14 — ELECTRICAL — STATE OF CALIFORNIA

THE STATE OF CALIFORNIA OR ITS OFFICERS OR AGENTS SHALL NOT BE RESPONSIBLE FOR THE ACCURACY OR COMPLETENESS OF SCANNED COPIES OF THIS PLAN SHEET.

NOTE:

FOR ACCURATE RIGHT OF WAY DATA, CONTACT RIGHT OF WAY ENGINEERING AT THE DISTRICT OFFICE.

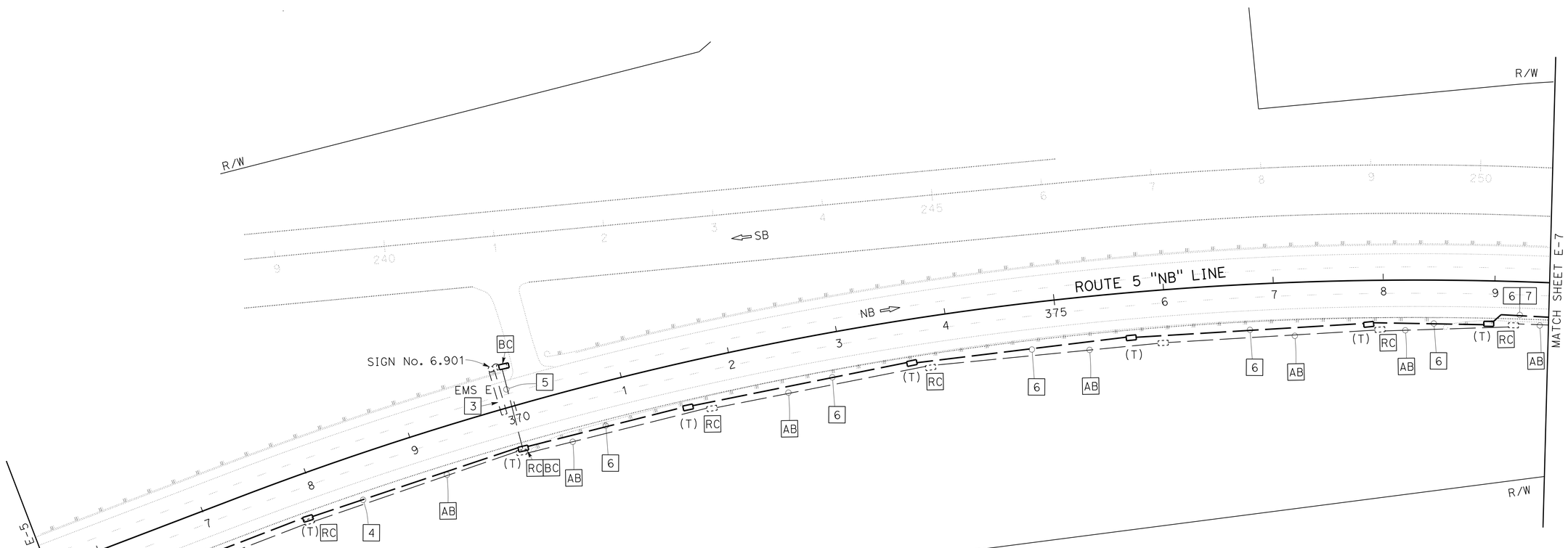

TRAFFIC OPERATION SYSTEM

E-6

SCALE: 1" = 50'

APPROVED FOR ELECTRICAL WORK ONLY

STATE OF CALIFORNIA - DEPARTMENT OF TRANSPORTATION
Caltrans® ELECTRICAL DESIGN

FUNCTIONAL SUPERVISOR: ALI BAKHDOUD
CALCULATED-DESIGNED BY: DANIEL VO
CHECKED BY: MONA ATTALLAH
REVISED BY
DATE REVISED

LAST REVISION 12-12-13
DATE PLOTTED => 27-JAN-2014
TIME PLOTTED => 16:42

Dist	COUNTY	ROUTE	POST MILES TOTAL PROJECT	SHEET No.	TOTAL SHEETS
06	Ker	5	6.0/9.0	20	43

REGISTERED ELECTRICAL ENGINEER 12-12-13 DATE

1-21-14
PLANS APPROVAL DATE

REGISTERED PROFESSIONAL ENGINEER DANIEL THANH VO No. 17408 Exp. 9-30-14 ELECTRICAL STATE OF CALIFORNIA

THE STATE OF CALIFORNIA OR ITS OFFICERS OR AGENTS SHALL NOT BE RESPONSIBLE FOR THE ACCURACY OR COMPLETENESS OF SCANNED COPIES OF THIS PLAN SHEET.

NOTE:

FOR ACCURATE RIGHT OF WAY DATA, CONTACT RIGHT OF WAY ENGINEERING AT THE DISTRICT OFFICE.

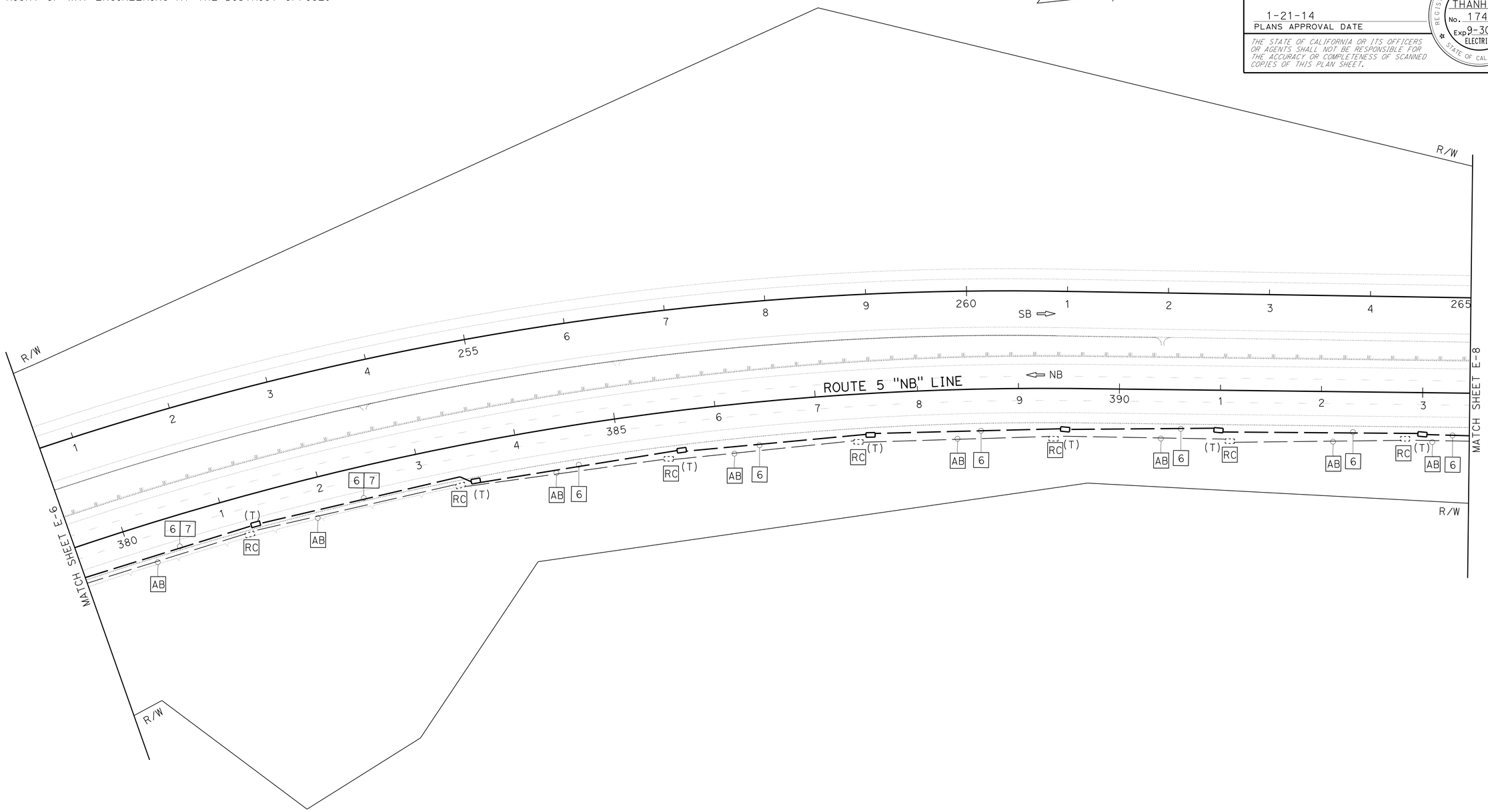

TRAFFIC OPERATION SYSTEM

E-7

SCALE: 1" = 50'

APPROVED FOR ELECTRICAL WORK ONLY

STATE OF CALIFORNIA - DEPARTMENT OF TRANSPORTATION
Caltrans® ELECTRICAL DESIGN

FUNCTIONAL SUPERVISOR: ALI BAKHDOUD
CALCULATED-DESIGNED BY: DANIEL VO
CHECKED BY: MONA ATTALLAH
REVISED BY
DATE REVISED

LAST REVISION 12-12-13
DATE PLOTTED => 27-JAN-2014
TIME PLOTTED => 16:42

Dist	COUNTY	ROUTE	POST MILES TOTAL PROJECT	SHEET No.	TOTAL SHEETS
06	Ker	5	6.0/9.0	21	43

REGISTERED ELECTRICAL ENGINEER — DATE 12-12-13

1-21-14
PLANS APPROVAL DATE

REGISTERED PROFESSIONAL ENGINEER DANIEL THANH VO No. 17408 Exp. 9-30-14 ELECTRICAL STATE OF CALIFORNIA

THE STATE OF CALIFORNIA OR ITS OFFICERS OR AGENTS SHALL NOT BE RESPONSIBLE FOR THE ACCURACY OR COMPLETENESS OF SCANNED COPIES OF THIS PLAN SHEET.

NOTE:

FOR ACCURATE RIGHT OF WAY DATA, CONTACT RIGHT OF WAY ENGINEERING AT THE DISTRICT OFFICE.

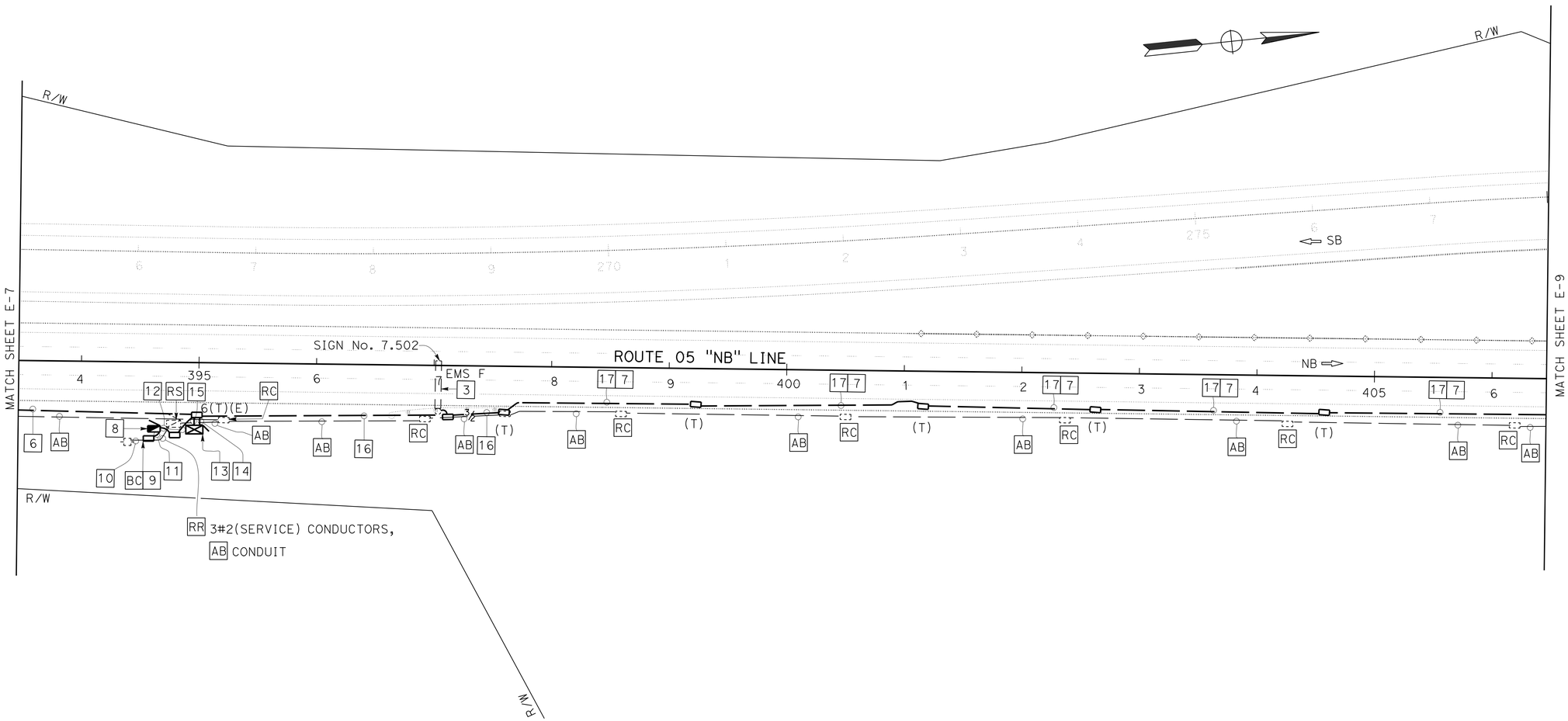

APPROVED FOR ELECTRICAL WORK ONLY

TRAFFIC OPERATION SYSTEM

E-8

SCALE: 1" = 50'

STATE OF CALIFORNIA - DEPARTMENT OF TRANSPORTATION
Caltrans® ELECTRICAL DESIGN

FUNCTIONAL SUPERVISOR: ALI BAKHDOUD
CALCULATED-DESIGNED BY: DANIEL VO
CHECKED BY: MONA ATTALLAH
REVISED BY
DATE REVISED

LAST REVISION 12-12-13
DATE PLOTTED => 27-JAN-2014
TIME PLOTTED => 16:42

Dist	COUNTY	ROUTE	POST MILES TOTAL PROJECT	SHEET No.	TOTAL SHEETS
06	Ker	5	6.0/9.0	22	43

REGISTERED ELECTRICAL ENGINEER 12-12-13 DATE

1-21-14
PLANS APPROVAL DATE

REGISTERED PROFESSIONAL ENGINEER DANIEL THANH VO No. 17408 Exp. 9-30-14 ELECTRICAL STATE OF CALIFORNIA

THE STATE OF CALIFORNIA OR ITS OFFICERS OR AGENTS SHALL NOT BE RESPONSIBLE FOR THE ACCURACY OR COMPLETENESS OF SCANNED COPIES OF THIS PLAN SHEET.

NOTE:

FOR ACCURATE RIGHT OF WAY DATA, CONTACT RIGHT OF WAY ENGINEERING AT THE DISTRICT OFFICE.

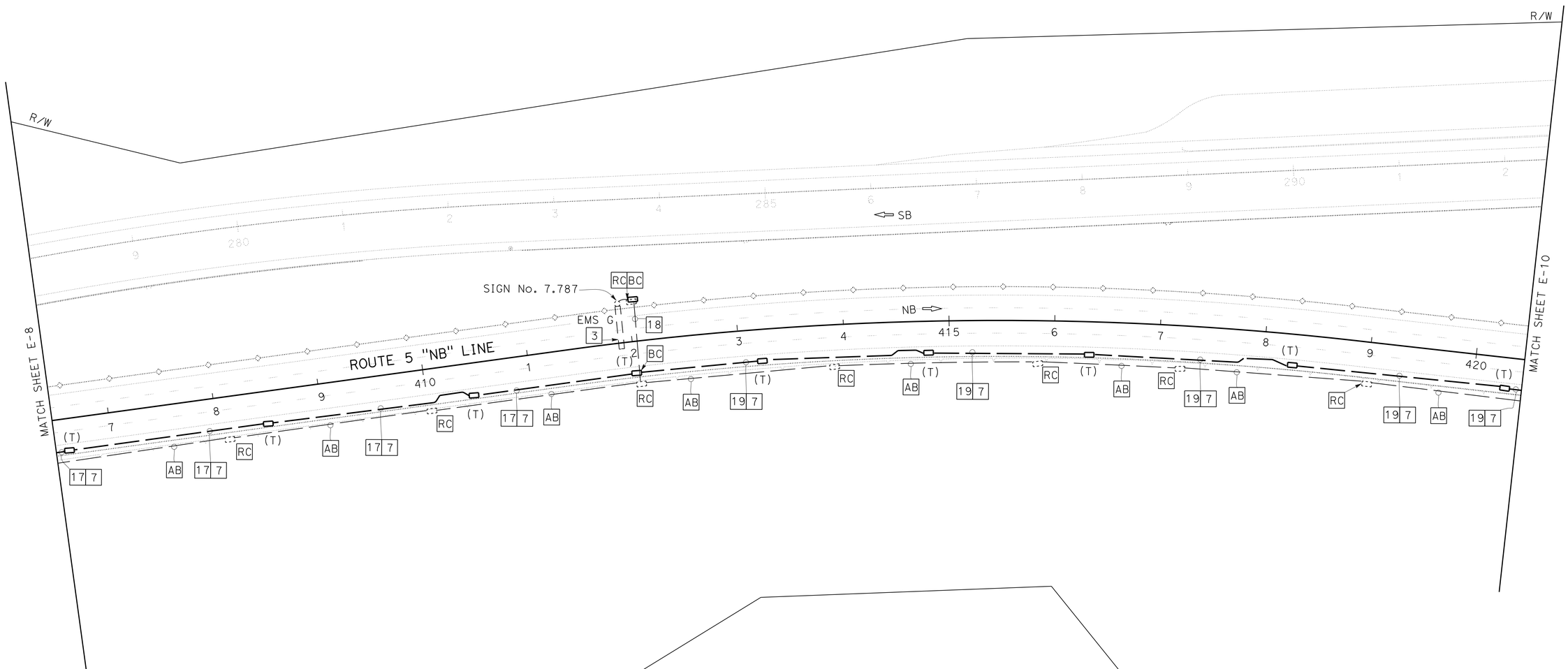

TRAFFIC OPERATION SYSTEM

E-9

SCALE: 1" = 50'

APPROVED FOR ELECTRICAL WORK ONLY

REVISED BY	
DATE REVISED	
CALCULATED-DESIGNED BY	DANIEL VO
CHECKED BY	MONA ATTALLAH
FUNCTIONAL SUPERVISOR	ALI BAKHDOUD

STATE OF CALIFORNIA - DEPARTMENT OF TRANSPORTATION
Caltrans® ELECTRICAL DESIGN

LAST REVISION 12-12-13 | DATE PLOTTED => 27-JAN-2014 | TIME PLOTTED => 16:42

Dist	COUNTY	ROUTE	POST MILES TOTAL PROJECT	SHEET No.	TOTAL SHEETS
06	Ker	5	6.0/9.0	23	43

REGISTERED ELECTRICAL ENGINEER — DATE 12-12-13

PLANS APPROVAL DATE 1-21-14

REGISTERED PROFESSIONAL ENGINEER DANIEL THANH VO No. 17408 Exp 9-30-14 ELECTRICAL STATE OF CALIFORNIA

THE STATE OF CALIFORNIA OR ITS OFFICERS OR AGENTS SHALL NOT BE RESPONSIBLE FOR THE ACCURACY OR COMPLETENESS OF SCANNED COPIES OF THIS PLAN SHEET.

NOTE:

FOR ACCURATE RIGHT OF WAY DATA, CONTACT RIGHT OF WAY ENGINEERING AT THE DISTRICT OFFICE.

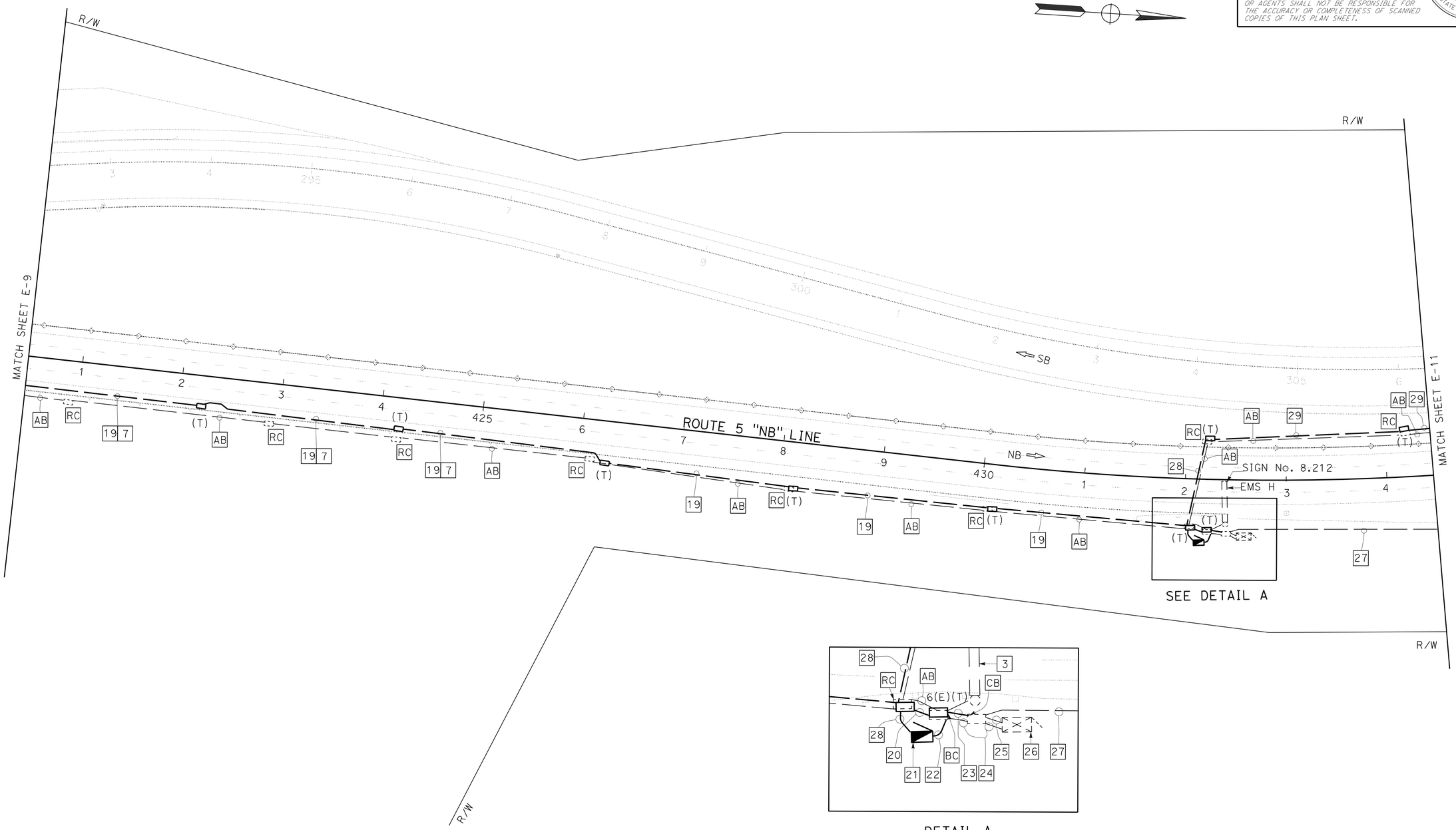

TRAFFIC OPERATION SYSTEM

E-10

SCALE: 1" = 50'

APPROVED FOR ELECTRICAL WORK ONLY

STATE OF CALIFORNIA - DEPARTMENT OF TRANSPORTATION

Caltrans® **ELECTRICAL DESIGN**

FUNCTIONAL SUPERVISOR: ALI BAKHDOUD

CALCULATED-DESIGNED BY: DANIEL VO

CHECKED BY: MONA ATTALLAH

REVISED BY / DATE REVISED

LAST REVISION 12-12-13 DATE PLOTTED => 27-JAN-2014 TIME PLOTTED => 16:42

BORDER LAST REVISED 7/2/2010 | USERNAME => s115755 DGN FILE => 613000117ua010.dgn | RELATIVE BORDER SCALE IS IN INCHES 0 1 2 3 | UNIT 1515 | PROJECT NUMBER & PHASE 0630001171

Dist	COUNTY	ROUTE	POST MILES TOTAL PROJECT	SHEET No.	TOTAL SHEETS
06	Ker	5	6.0/9.0	24	43

REGISTERED ELECTRICAL ENGINEER 12-12-13 DATE

1-21-14
PLANS APPROVAL DATE

REGISTERED PROFESSIONAL ENGINEER DANIEL THANH VO No. 17408 Exp 9-30-14 ELECTRICAL STATE OF CALIFORNIA

THE STATE OF CALIFORNIA OR ITS OFFICERS OR AGENTS SHALL NOT BE RESPONSIBLE FOR THE ACCURACY OR COMPLETENESS OF SCANNED COPIES OF THIS PLAN SHEET.

NOTE:

FOR ACCURATE RIGHT OF WAY AND ACCESS DATA,
CONTACT RIGHT OF WAY ENGINEERING AT THE DISTRICT OFFICE.

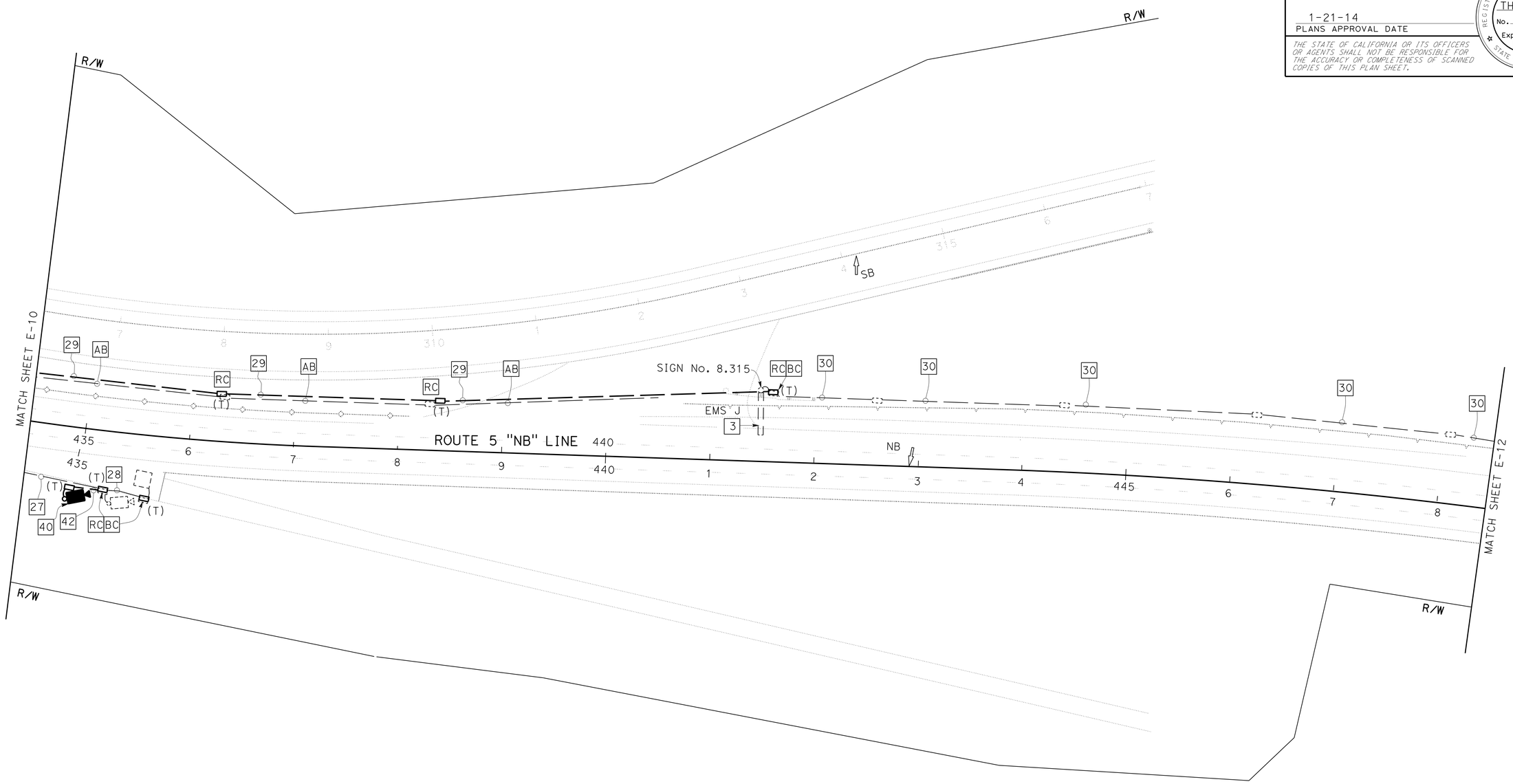

TRAFFIC OPERATION SYSTEM

E-11

SCALE: 1" = 20'

APPROVED FOR ELECTRICAL WORK ONLY

STATE OF CALIFORNIA - DEPARTMENT OF TRANSPORTATION
Caltrans® ELECTRICAL DESIGN

FUNCTIONAL SUPERVISOR: ALI BAKHDOUD
CALCULATED-DESIGNED BY: DANIEL VO
CHECKED BY: MONA ATTALLAH
REVISED BY
DATE REVISED

LAST REVISION 12-12-13
DATE PLOTTED => 27-JAN-2014
TIME PLOTTED => 16:42

Dist	COUNTY	ROUTE	POST MILES TOTAL PROJECT	SHEET No.	TOTAL SHEETS
06	Ker	5	6.0/9.0	25	43

REGISTERED ELECTRICAL ENGINEER — DATE 12-12-13

PLANS APPROVAL DATE 1-21-14

REGISTERED PROFESSIONAL ENGINEER — DANIEL THANH VO No. 17408 Exp 9-30-14 ELECTRICAL — STATE OF CALIFORNIA

THE STATE OF CALIFORNIA OR ITS OFFICERS OR AGENTS SHALL NOT BE RESPONSIBLE FOR THE ACCURACY OR COMPLETENESS OF SCANNED COPIES OF THIS PLAN SHEET.

NOTE:

FOR ACCURATE RIGHT OF WAY DATA, CONTACT RIGHT OF WAY ENGINEERING AT THE DISTRICT OFFICE.

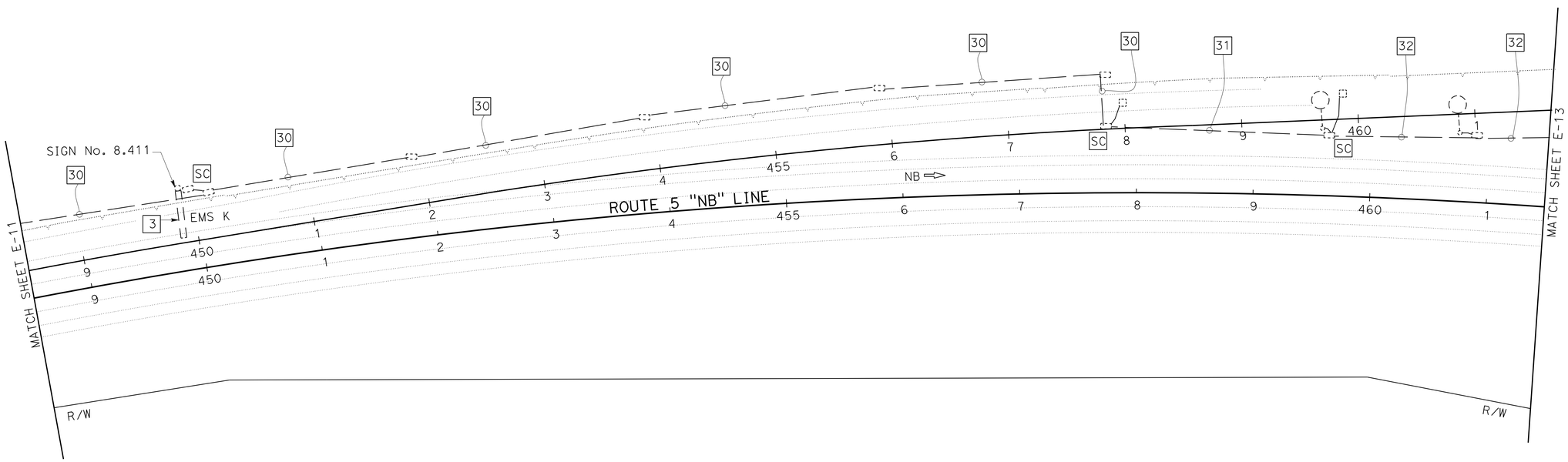

TRAFFIC OPERATION SYSTEM

E-12

SCALE: 1" = 50'

APPROVED FOR ELECTRICAL WORK ONLY

STATE OF CALIFORNIA - DEPARTMENT OF TRANSPORTATION

Caltrans® ELECTRICAL DESIGN

FUNCTIONAL SUPERVISOR: ALI BAKHDOUD

CALCULATED-DESIGNED BY: DANIEL VO

CHECKED BY: MONA ATTALLAH

REVISED BY / DATE REVISED

LAST REVISION 12-12-13 | DATE PLOTTED => 27-JAN-2014 | TIME PLOTTED => 16:42

Dist	COUNTY	ROUTE	POST MILES TOTAL PROJECT	SHEET No.	TOTAL SHEETS
06	Ker	5	6.0/9.0	26	43

REGISTERED ELECTRICAL ENGINEER 12-12-13 DATE

1-21-14
PLANS APPROVAL DATE

REGISTERED PROFESSIONAL ENGINEER
DANIEL THANH VO
No. 17408
Exp 9-30-12
ELECTRICAL
STATE OF CALIFORNIA

THE STATE OF CALIFORNIA OR ITS OFFICERS OR AGENTS SHALL NOT BE RESPONSIBLE FOR THE ACCURACY OR COMPLETENESS OF SCANNED COPIES OF THIS PLAN SHEET.

NOTE:

FOR ACCURATE RIGHT OF WAY DATA, CONTACT
RIGHT OF WAY ENGINEERING AT THE DISTRICT OFFICE.

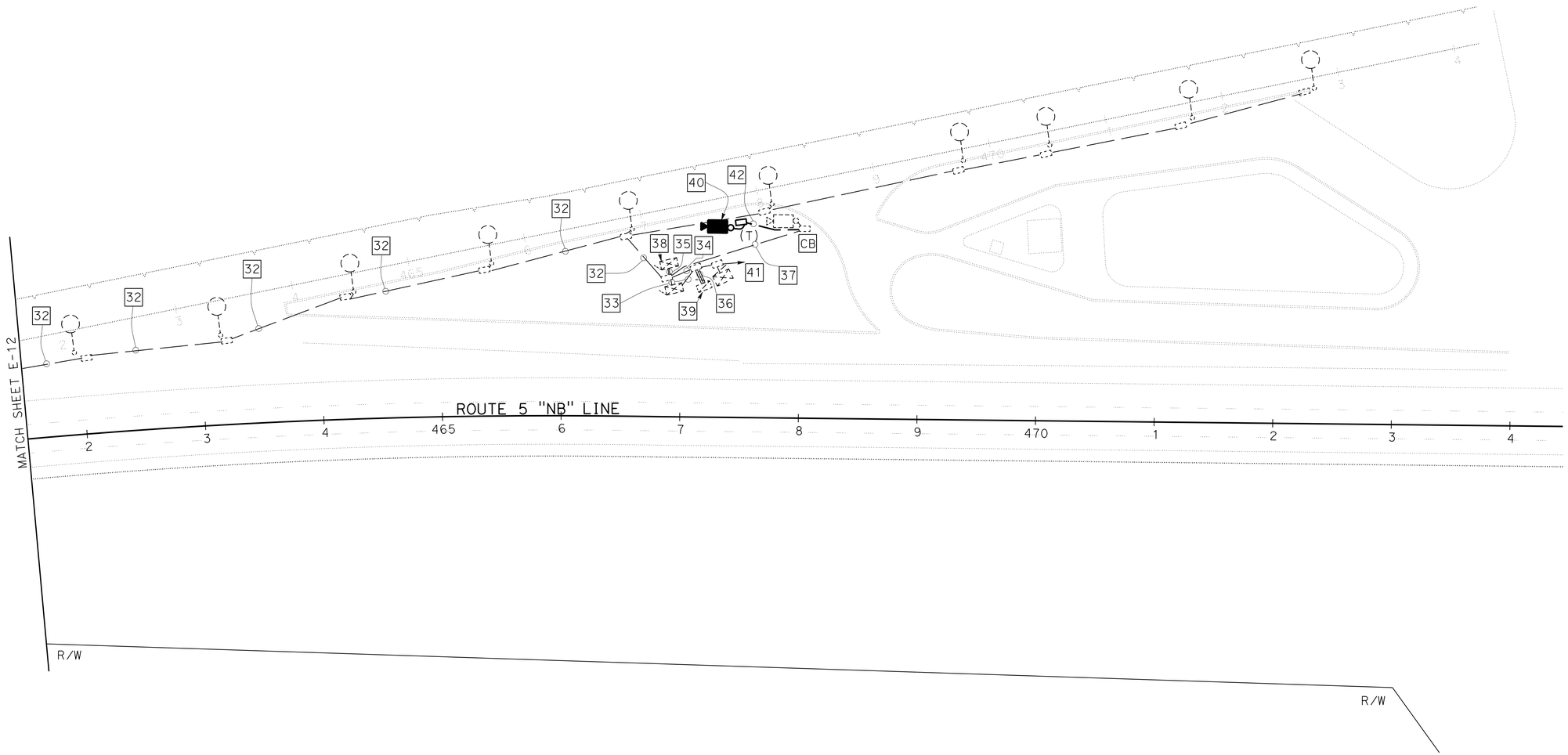

TRAFFIC OPERATION SYSTEM

E-13

SCALE: 1" = 50'

APPROVED FOR ELECTRICAL WORK ONLY

STATE OF CALIFORNIA - DEPARTMENT OF TRANSPORTATION
Caltrans® ELECTRICAL DESIGN

FUNCTIONAL SUPERVISOR: ALI BAKHDOUD
CALCULATED-DESIGNED BY: DANIEL VO
CHECKED BY: MONA ATTALLAH
REVISED BY
DATE REVISED

LAST REVISION 12-12-13
DATE PLOTTED => 27-JAN-2014
TIME PLOTTED => 16:42

Dist	COUNTY	ROUTE	POST MILES TOTAL PROJECT	SHEET No.	TOTAL SHEETS
06	Ker	5	6.0/9.0	27	43

REGISTERED ELECTRICAL ENGINEER — DATE 12-12-13

1-21-14
PLANS APPROVAL DATE

REGISTERED PROFESSIONAL ENGINEER — DANIEL THANH VO No. 17408 Exp. 9/30/14 ELECTRICAL — STATE OF CALIFORNIA

THE STATE OF CALIFORNIA OR ITS OFFICERS OR AGENTS SHALL NOT BE RESPONSIBLE FOR THE ACCURACY OR COMPLETENESS OF SCANNED COPIES OF THIS PLAN SHEET.

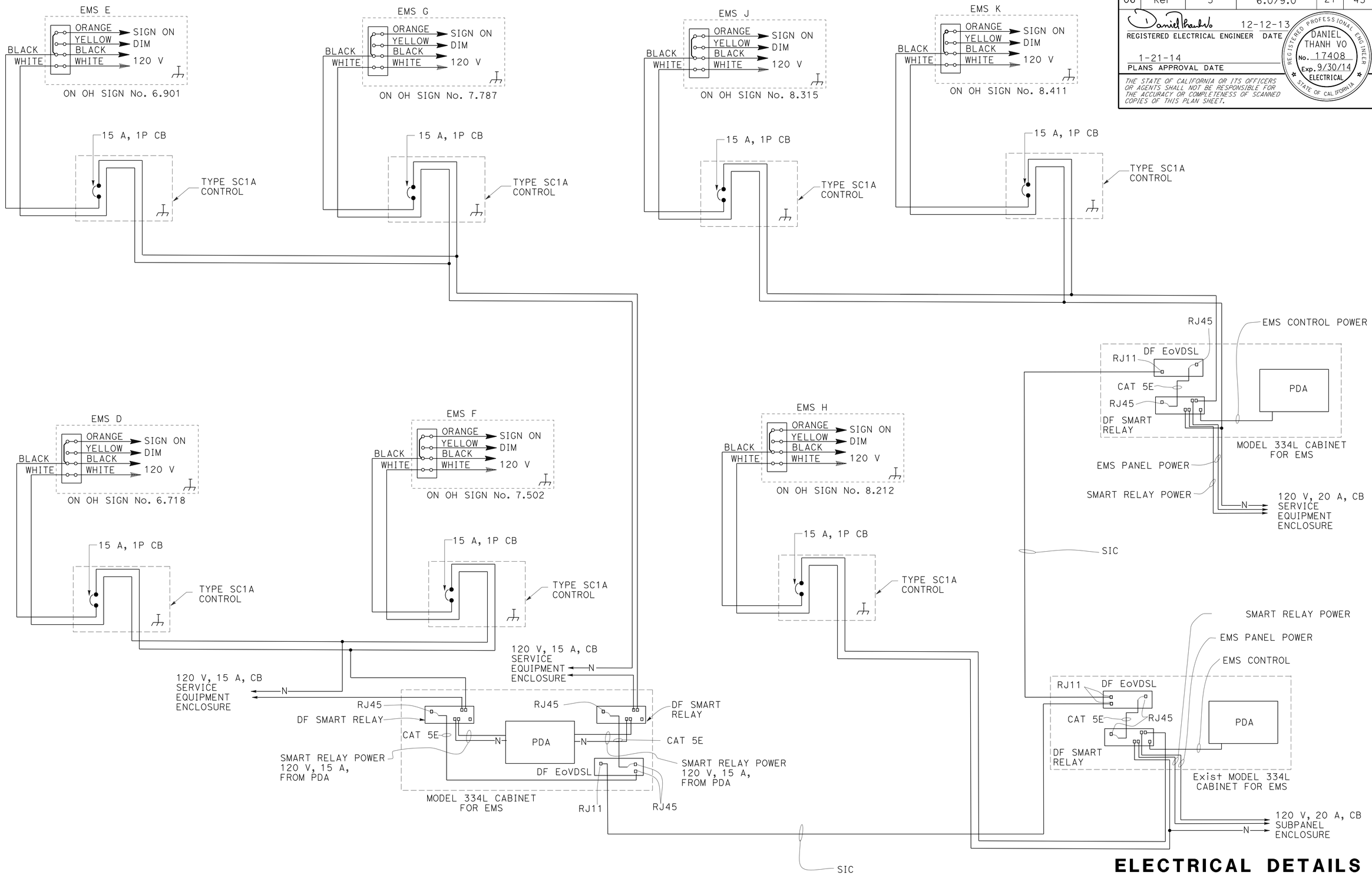

ELECTRICAL DETAILS

NO SCALE

E-14

STATE OF CALIFORNIA - DEPARTMENT OF TRANSPORTATION
Caltrans® **ELECTRICAL DESIGN**

FUNCTIONAL SUPERVISOR: ALI BAKHDOUD
CALCULATED-DESIGNED BY: DANIEL VO
CHECKED BY: MONA ATTALLAH
REVISED BY
DATE REVISED

LAST REVISION 12-12-13 | DATE PLOTTED => 27-JAN-2014 | TIME PLOTTED => 16:42

Dist	COUNTY	ROUTE	POST MILES TOTAL PROJECT	SHEET No.	TOTAL SHEETS
06	Ker	5	6.0/9.0	28	43

REGISTERED ELECTRICAL ENGINEER 12-12-13 DATE

1-21-14
PLANS APPROVAL DATE

REGISTERED PROFESSIONAL ENGINEER DANIEL THANH VO No. 17408 Exp. 9-30-14 ELECTRICAL STATE OF CALIFORNIA

THE STATE OF CALIFORNIA OR ITS OFFICERS OR AGENTS SHALL NOT BE RESPONSIBLE FOR THE ACCURACY OR COMPLETENESS OF SCANNED COPIES OF THIS PLAN SHEET.

NOTE:

THE QUANTITIES ON THIS SHEET ARE FOR INFORMATION ONLY AND NOT SEPARATE PAY ITEMS.

TRAFFIC OPERATION SYSTEM

SHEET No.	2"C TYPE 3	3"C TYPE 3	PB No. 5 (T)	PB No. 6 (T) (E)	#2 CONDUCTOR	#4 CONDUCTOR	#6 CONDUCTOR	#8 CONDUCTOR	#8 (G) CONDUCTOR	DLC	SIC	HYBRID CABLE	CAT 5E	TYPE IIIB SERVICE EQUIPMENT ENCLOSURE	TYPE 334L CABINET FOR EMS	TYPE IIIB SERVICE EQUIPMENT ENCLOSURE FOUNDATION	TYPE 334L CABINET FOUNDATION	EMS SIGN	ISL	CCTV	TYPE 25' CCTV POLE	WIRRELESS MODEM	FB LED	PG&E APPROVED PB	FBCA
	LF	LF	EA	EA	LF	LF	LF	LF	LF	LF	LF	LF	LF	EA	EA	EA	EA	EA	EA	EA	EA	EA	EA	EA	EA
E-3	387		2			774	774		390										2				2		1
E-4	1496		8			2992	2992		1496																
E-5	1336		7			2372	4612	1940	1336									1	2						
E-6	1314		9			2628	7186	4558	1314									1	2						
E-7	1300		7			2596	7788	5192	1300																
E-8	1208	100	7	1		296	5296	5000	1308		1100			1	1	1	1	1	2					1	
E-9	1468		10				1236	1236	1468		1500							1	2						
E-10	1502	200	9	1	875		200	200	1600		1586	200	200	1		1		1	2			1			
E-11	600		5		4100		1526	1526	1345		1345	150	150							1	1				
E-12					3945		2314	2314	1315	370	1315														
E-13			1		1614		1076	1076	540	540	1076	150	150							1	1	1			

ELECTRICAL QUANTITIES
E-15

REVISED BY | DATE REVISED
DANIEL VO | MONA ATTALLAH
CALCULATED-DESIGNED BY | CHECKED BY
FUNCTIONAL SUPERVISOR | ALI BAKHDOUD

STATE OF CALIFORNIA - DEPARTMENT OF TRANSPORTATION
Caltrans 06-ELECTRICAL DESIGN

LAST REVISION 12-12-13 | DATE PLOTTED => 27-JAN-2014 | TIME PLOTTED => 16:42

M

Maint	MAINTENANCE
Max	MAXIMUM
MB	METAL BEAM
MBB	METAL BEAM BARRIER
MBGR	METAL BEAM GUARD RAILING
Med	MEDIAN
MGS	MIDWEST GUARDRAIL SYSTEM
MH	MANHOLE
Min	MINIMUM
Misc	MISCELLANEOUS
Misc I & S	MISCELLANEOUS IRON AND STEEL
Mkr	MARKER
Mod	MODIFIED,
	MODIFY
Mon	MONUMENT
MP	METAL PLATE
MPGR	METAL PLATE GUARD RAILING
MR	MOVEMENT RATING
MSE	MECHANICALLY STABILIZED EMBANKMENT
Mt	MOUNTAIN, MOUNT
Mtl	MATERIAL
MVP	MAINTENANCE VEHICLE PULLOUT

N

N	NORTH
NB	NORTHBOUND
No.	NUMBER (MUST HAVE PERIOD)
Nos.	NUMBERS (MUST HAVE PERIOD)
NPS	NOMINAL PIPE SIZE
NS	NEAR SIDE
NSP	NEW STANDARD PLAN
NTS	NOT TO SCALE

O

Oblr	OBLITERATE
OC	OVERCROSSING
OD	OUTSIDE DIAMETER
OF	OUTSIDE FACE
OG	ORIGINAL GROUND
OGAC	OPEN GRADED ASPHALT CONCRETE
OGFC	OPEN GRADED FRICTION COURSE
OH	OVERHEAD
OHWM	ORDINARY HIGH WATER MARK
O-O	OUT TO OUT
Opp	OPPOSITE
OSD	OVERSIDE DRAIN

P

P	PAGE
PAP	PERFORATED ALUMINUM PIPE
PB	PULL BOX
PC	POINT OF CURVATURE,
	PRECAST
PCC	POINT OF COMPOUND CURVE,
	PORTLAND CEMENT CONCRETE
PCMS	PORTABLE CHANGEABLE MESSAGE SIGN
PCP	PERFORATED CONCRETE PIPE,
	PRESTRESSED CONCRETE PIPE
PCVC	POINT OF COMPOUND VERTICAL CURVE
PEC	PERMIT TO ENTER AND CONSTRUCT
Ped	PEDESTRIAN
Ped OC	PEDESTRIAN OVERCROSSING
Ped UC	PEDESTRIAN UNDERCROSSING
Perm Mtl	PERMEABLE MATERIAL

P continued

PG	PROFILE GRADE
PI	POINT OF INTERSECTION
PJP	PARTIAL JOINT PENETRATION
Pkwy	PARKWAY
ℙL,PL	PLATE
P/L	PROPERTY LINE
PM	POST MILE,
	TIME FROM NOON TO MIDNIGHT
PN	PAVING NOTCH
POC	POINT OF HORIZONTAL CURVE
POT	POINT OF TANGENT
POVC	POINT OF VERTICAL CURVE
PP	PIPE PILE,
	PLASTIC PIPE,
	POWER POLE
PPL	PREFORMED PERMEABLE LINER
PPP	PERFORATED PLASTIC PIPE
PRC	POINT OF REVERSE CURVE
PRF	PAVEMENT REINFORCING FABRIC
PRVC	POINT OF REVERSE VERTICAL CURVE
PS&E	PLANS, SPECIFICATIONS AND ESTIMATES
PS, P/S	PRESTRESSED
PSP	PERFORATED STEEL PIPE
PT	POINT OF TANGENCY
PVC	POLYVINYL CHLORIDE
Pvmt	PAVEMENT

Q

Qty	QUANTITY

R

R	RADIUS
R & D	REMOVE AND DISPOSE
R & S	REMOVE AND SALVAGE
R/C	RATE OF CHANGE
RCA	REINFORCED CONCRETE ARCH
RCB	REINFORCED CONCRETE BOX
RCP	REINFORCED CONCRETE PIPE
RCPA	REINFORCED CONCRETE PIPE ARCH
Rd	ROAD
Reinf	REINFORCED,
	REINFORCEMENT,
	REINFORCING
Rel	RELOCATE
Repl	REPLACEMENT
Ret	RETAINING
Rev	REVISED, REVISION
Rdwy	ROADWAY
RHMA	RUBBERIZED HOT MIX ASPHALT
Riv	RIVER
RM	ROAD-MIXED
RP	RADIUS POINT,
	REFERENCE POINT
RR	RAILROAD
RSP	ROCK SLOPE PROTECTION,
	REVISED STANDARD PLAN
Rt	RIGHT
Rte	ROUTE
RW	REDWOOD,
	RETAINING WALL
R/W	RIGHT OF WAY
Rwy	RAILWAY

S

S	SOUTH,
	SUPPLEMENT
SAE	STRUCTURE APPROACH EMBANKMENT
Salv	SALVAGE
SAPP	STRUCTURAL ALUMINUM PLATE PIPE
SB	SOUTHBOUND
SC	SAND CUSHION
SCSP	SLOTTED CORRUGATED STEEL PIPE
SD	STORM DRAIN
Sec	SECOND,
	SECTION
Sep	SEPARATION
SG	SUBGRADE
Shld	SHOULDER
Sht	SHEET
Sim	SIMILAR
℄	STATION LINE
SM	SELECTED MATERIAL
Spec	SPECIAL,
	SPECIFICATIONS
SPP	SLOTTED PLASTIC PIPE
SS	SLOPE STAKE
SSBM	STRAP AND SADDLE BRACKET METHOD
SSD	STRUCTURAL SECTION DRAIN
SSPA	STRUCTURAL STEEL PLATE ARCH
SSPP	STRUCTURAL STEEL PLATE PIPE
SSPPA	STRUCTURAL STEEL PLATE PIPE ARCH
SSRP	STEEL SPIRAL RIB PIPE
St	STREET
Sta	STATION
STBB	SINGLE THRIE BEAM BARRIER
Std	STANDARD
Str	STRUCTURE
Surf	SURFACING
SW	SIDEWALK,
	SOUND WALL
Swr	SEWER
Sym	SYMMETRICAL
S4S	SURFACE 4 SIDES

T

T	SEMI-TANGENT
Tan	TANGENT
TBB	THRIE BEAM BARRIER
Tbr	TIMBER
TC	TOP OF CURB
TCB	TRAFFIC CONTROL BOX
TCE	TEMPORARY CONSTRUCTION EASEMENT
Tel	TELEPHONE
Temp	TEMPORARY
TG	TOP OF GRADE
Tot	TOTAL
TP	TELEPHONE POLE
TPB	TREATED PERMEABLE BASE
TPM	TREATED PERMEABLE MATERIAL
Trans	TRANSITION

T continued

TS	TRANSVERSE,
	TRAFFIC SIGNAL,
	TUBULAR STEEL
Typ	TYPICAL

U

UC	UNDERCROSSING
UD	UNDERDRAIN
UG	UNDERGROUND
UON	UNLESS OTHERWISE NOTED
UP	UNDERPASS

V

V	VALVE,
	DESIGN SPEED
Var	VARIABLE,
	VARIES
VC	VERTICAL CURVE
VCP	VITRIFIED CLAY PIPE
Vert	VERTICAL
Via	VIADUCT
Vol	VOLUME

W

W	WEST,
	WIDTH
WB	WESTBOUND
WH	WEEP HOLE
WM	WIRE MESH
WS	WATER SURFACE
WSP	WELDED STEEL PIPE
Wt	WEIGHT
WV	WATER VALVE
WW	WINGWALL
WWLOL	WINGWALL LAYOUT LINE

X

X Sec	CROSS SECTION
Xing	CROSSING

Y

Yr	YEAR
Yrs	YEARS

Dist	COUNTY	ROUTE	POST MILES TOTAL PROJECT	SHEET No.	TOTAL SHEETS
06	Ker	5	6.0/9.0	29	43

Grace M. Tsushima
REGISTERED CIVIL ENGINEER

July 19, 2013
PLANS APPROVAL DATE

REGISTERED PROFESSIONAL ENGINEER Grace M. Tsushima No. C49814 Exp. 9-30-14 CIVIL STATE OF CALIFORNIA

THE STATE OF CALIFORNIA OR ITS OFFICERS OR AGENTS SHALL NOT BE RESPONSIBLE FOR THE ACCURACY OR COMPLETENESS OF SCANNED COPIES OF THIS PLAN SHEET.

TO ACCOMPANY PLANS DATED 1-21-14

UNIT OF MEASUREMENT SYMBOLS:

Some of the symbols used in the project plan quantity tables and in the Bid Item List are:

TABLE A

SYMBOL USED	DEFINITIONS
ACRE	ACRE
CF	CUBIC FOOT
CY	CUBIC YARD
EA	EACH
GAL	GALLON
LB	POUND
LF	LINEAR FOOT
SQFT	SQUARE FOOT
SQYD	SQUARE YARD
STA	100 FEET
TAB	TABLET
TON	2,000 POUNDS

Some of the symbols used in the plans other than in the project plan quantity tables are:

TABLE B

SYMBOL USED	DEFINITIONS
ksi	KIPS PER SQUARE INCH
ksf	KIPS PER SQUARE FOOT
psi	POUNDS PER SQUARE INCH
psf	POUNDS PER SQUARE FOOT
lb/ft^3, pcf	POUNDS PER CUBIC FOOT
tsf	TONS PER SQUARE FOOT
mph, MPH *	MILES PER HOUR
ø	NOMINAL DIAMETER
oz	OUNCE
lb	POUND
kip	1,000 POUNDS
cal	CALORIE
ft	FOOT OR FEET
gal	GALLON

* For use on a sign panel only

STATE OF CALIFORNIA
DEPARTMENT OF TRANSPORTATION

ABBREVIATIONS (SHEET 2 OF 2)

NO SCALE

RSP A10B DATED JULY 19, 2013 SUPERSEDES STANDARD PLAN A10B DATED MAY 20, 2011 - PAGE 2 OF THE STANDARD PLANS BOOK DATED 2010.

REVISED STANDARD PLAN RSP A10B

2010 REVISED STANDARD PLAN RSP A10B

6-7-13

Dist	COUNTY	ROUTE	POST MILES TOTAL PROJECT	SHEET No.	TOTAL SHEETS
06	Ker	5	6.0/9.0	30	43

REGISTERED CIVIL ENGINEER

April 19, 2013
PLANS APPROVAL DATE

REGISTERED PROFESSIONAL ENGINEER Gurinderpal Bhullar No. C48815 Exp. 9-30-14 CIVIL STATE OF CALIFORNIA

THE STATE OF CALIFORNIA OR ITS OFFICERS OR AGENTS SHALL NOT BE RESPONSIBLE FOR THE ACCURACY OR COMPLETENESS OF SCANNED COPIES OF THIS PLAN SHEET.

TO ACCOMPANY PLANS DATED 1-21-14

NOTES:

See Revised Standard Plan RSP T9 for tables.

Use cone spacing X for taper segment, Y for tangent segment or Z for conflict situations, as approriate, per Table 1, unless X, Y, or Z cone spacing is shown on this sheet.

Unless otherwise specified in the special provisions, all temporary warning signs shall have black legend on fluorescent orange background.

California codes are designated by (CA). Otherwise, Federal (MUTCD) codes are shown.

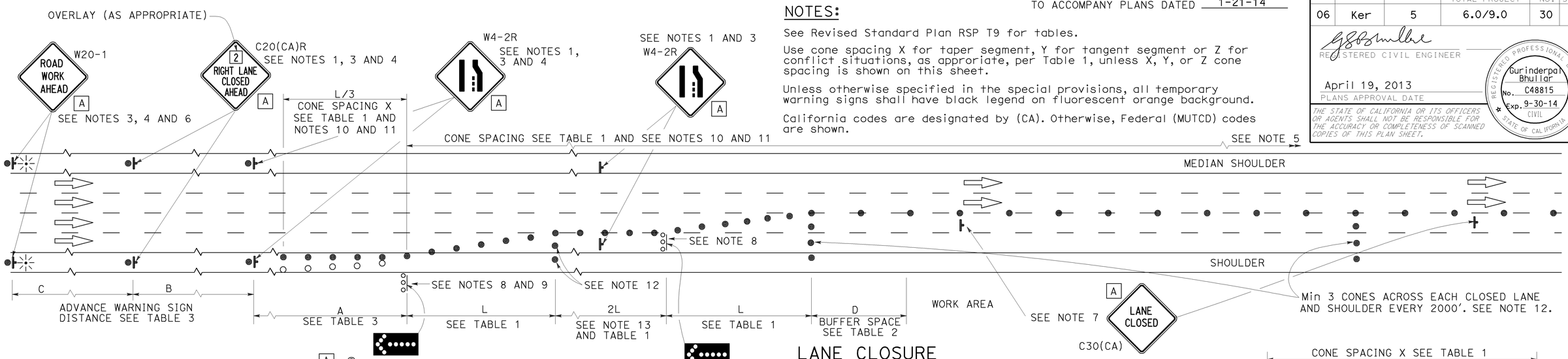

LANE CLOSURE

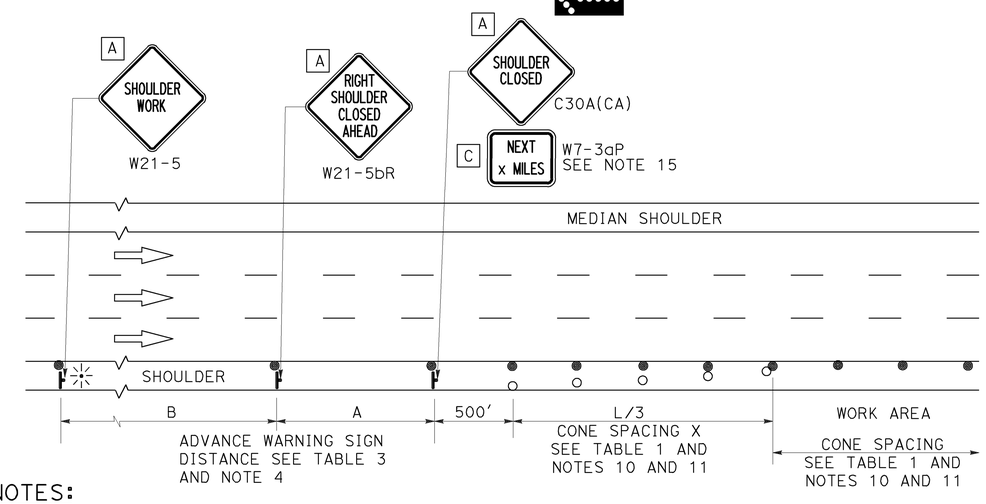

SHOULDER CLOSURE

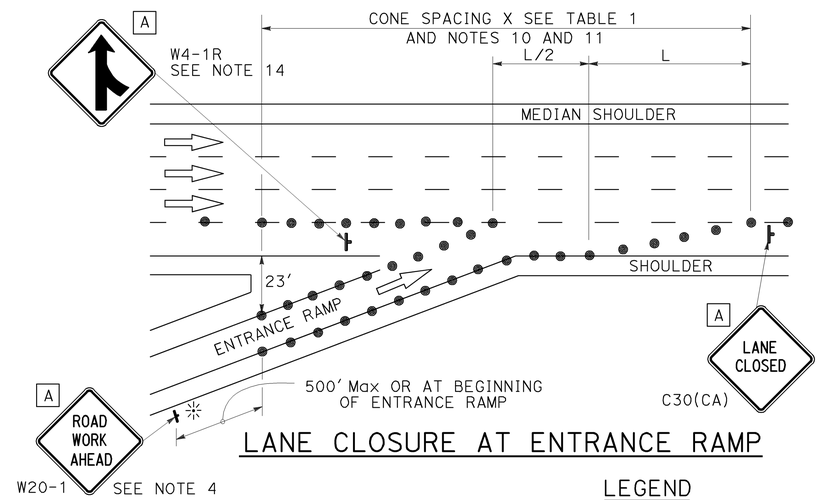

LANE CLOSURE AT ENTRANCE RAMP

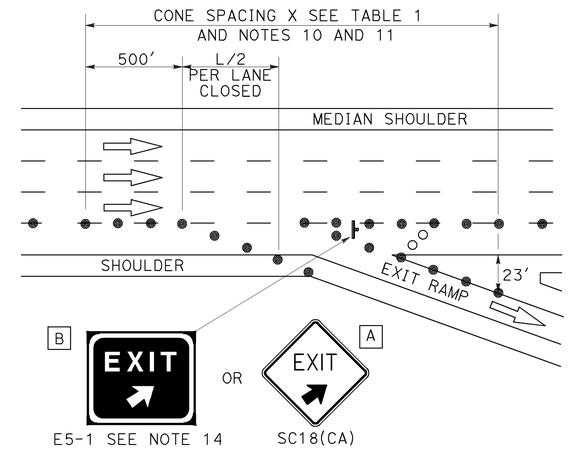

LANE CLOSURE AT EXIT RAMP

NOTES:

1. Median lane closures shall conform to the details as shown except that C20(CA)L and W4-2L signs shall be used.
2. At least one person shall be assigned to provide full time maintenance of traffic control devices for lane closures.
3. Duplicate sign installations are not required:
   a) On opposite shoulder if at least one-half of the available lanes remain open to traffic.
   b) In the median if the width of the median shoulder is less than 8' and the outside lanes are to be closed.
4. Each advance warning sign on each side of the roadway shall be equipped with at least two flags for daytime closure. Each flag shall be at least 16" x 16" in size and shall be orange or fluorescent red-orange in color. Flashing beacons shall be placed at the locations indicated for lane closure during hours of darkness.
5. A G20-2 "END ROAD WORK" sign, with minimum size of 48" x 24" as appropriate, shall be placed at the end of the lane closure unless the end of work area is obvious or ends within a larger project's limits.
6. If the W20-1 sign would follow within 2000' of a stationary W20-1 or G20-1 "ROAD WORK NEXT _____ MILES", use a C20(CA) sign for the first advance warning sign.
7. Place a C30(CA) sign every 2000' throughout length of lane closure.
8. One flashing arrow sign for each lane closed. The flashing arrow signs shall be Type I.
9. A minimum 1500' of sight distance shall be provided where possible for vehicles approaching the first flashing arrow sign. Lane closures shall not begin at top of crest vertical curve or on a horizontal curve.
10. All cones used for lane closures during the hours of darkness shall be fitted with retroreflective bands (or sleeves) as specified in the specifications.
11. Portable delineators, placed at one-half the spacing indicated for traffic cones may be used instead of cones for daytime closures only.
12. Unless otherwise specified in the special provisions, a minimum of 3 cones shall be placed transversely across each closed lane and shoulder at each location where a taper across a traffic lane ends and every 2000' as shown on the "Lane Closure" detail. Two Type II barricades may be used instead of the 3 cones. The transverse alignment of the cones or barricades on the closed shoulder may be shifted from the transverse alignment to provide access to the work.
13. Unless otherwise specified in the special provisions, the 2L tangent shown along lane lines shall be used between the L tapers required for each closed traffic lane.
14. Unless otherwise specified in the special provisions, the E5-1 or SC18(CA) and W4-1 signs shall be used as shown.
15. A W7-3aP "NEXT____ MILES" plaque must be used if theshoulder closure extends beyond the distance that can be perceived by road users.

LEGEND

- TRAFFIC CONE
- TRAFFIC CONE (OPTIONAL TAPER)
- TEMPORARY TRAFFIC CONTROL SIGN
- FLASHING ARROW SIGN (FAS)
- FAS SUPPORT OR TRAILER
- PORTABLE FLASHING BEACON

SIGN PANEL SIZE (Min)

A	48" x 48"
B	72" x 60"
C	36" x 30"

STATE OF CALIFORNIA
DEPARTMENT OF TRANSPORTATION

TRAFFIC CONTROL SYSTEM FOR LANE CLOSURE ON FREEWAYS AND EXPRESSWAYS

NO SCALE

RSP T10 DATED APRIL 19, 2013 SUPERSEDES STANDARD PLAN T10 DATED MAY 20, 2011 - PAGE 237 OF THE STANDARD PLANS BOOK DATED 2010.

REVISED STANDARD PLAN RSP T10

2010 REVISED STANDARD PLAN RSP T10

12-18-12

Dist	COUNTY	ROUTE	POST MILES TOTAL PROJECT	SHEET No.	TOTAL SHEETS
06	Ker	5	6.0/9.0	31	43

REGISTERED CIVIL ENGINEER

July 19, 2013
PLANS APPROVAL DATE

REGISTERED PROFESSIONAL ENGINEER Stanley P. Johnson No. C57793 Exp. 3-31-14 CIVIL STATE OF CALIFORNIA

THE STATE OF CALIFORNIA OR ITS OFFICERS OR AGENTS SHALL NOT BE RESPONSIBLE FOR THE ACCURACY OR COMPLETENESS OF SCANNED COPIES OF THIS PLAN SHEET.

TO ACCOMPANY PLANS DATED 1-21-14

2010 REVISED STANDARD PLAN RSP S1

INSTRUCTIONS TO FABRICATOR

PROJECT PLANS SHOW:

1. Sign structure location.
2. Length of structure frame.
3. Panel size and locations on structure.
4. Walkway length for two post signs.
5. Post type and height to bottom of frame.
6. Base plate elevation.
7. Footing elevation or location of pile foundation.
8. Photoelectric unit location if required.

REFER TO THE FOLLOWING STANDARD PLANS FOR DETAILS NOT SHOWN ON PROJECT PLANS:

Sheet No.	SHEET NAME
S1	Overhead Signs-Truss, Instructions and Examples
S2	Overhead Signs-Truss, Single Post Type, Post Types II to IX
S3	Overhead Signs-Truss, Single Post Type, Base Plate and Anchorage Details
S4	Overhead Signs-Truss, Single Post Type, Structural Frame Members Details No. 1
S5	Overhead Signs-Truss, Single Post Type, Structural Frame Members Details No. 2
S6	Overhead Signs-Truss, Gusset Plate Details
S8	Overhead Signs-Truss, Single Post Type, Round Pedestal Pile Foundation
S9	Overhead Signs-Truss, Two Post Type, Post Types I-S through VII-S
S10	Overhead Signs-Truss, Two Post Type, Base Plate and Anchorage Details
S11	Overhead Signs-Truss, Two Post Type, Structural Frame Members
S12	Overhead Signs-Truss, Structural Frame Details
S13	Overhead Signs-Truss, Frame Juncture Details
S15	Overhead Signs-Truss, Two Post Type, Round Pedestal Pile Foundation
S16	Overhead Signs, Walkway Details No. 1
S17	Overhead Signs, Walkway Details No. 2
S17A	Overhead Signs, Walkway Details No. 3
S18	Overhead Signs, Walkway Safety Railing Details
S19	Overhead Signs-Truss, Sign Mounting Details, Laminated Panel-Type A
S20	Overhead Signs, Steel Frames, Removable Sign Panel Frames
S21	Overhead Signs, Removable Sign Panel Frames, Mounting Details
S22	Overhead Signs-Truss, Removable Sign Panel Frames, 9'-2" and 10'-0" Sign Panels

WALKWAY BRACKETS:

Space all walkway brackets maintaining uniform spacing where possible. Maximum spacing shall not exceed 5'-6".

LIGHTING FIXTURE SUPPORTS:

Where distance from walkway bracket to end of sign panel exceeds 1'-4", extend lighting fixture supports to next walkway bracket. See Example No. 2.

WALKWAY AND SAFETY RAILING:

Walkway to be continuous for entire length of frame for single post signs. For two post signs, see Project Plans. Safety railing to protect entire walkway, but continuous for no more than 11'-0" in one unit.

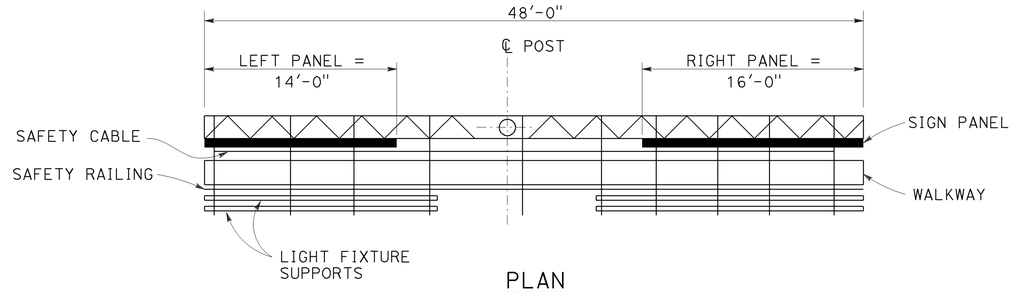

PLAN

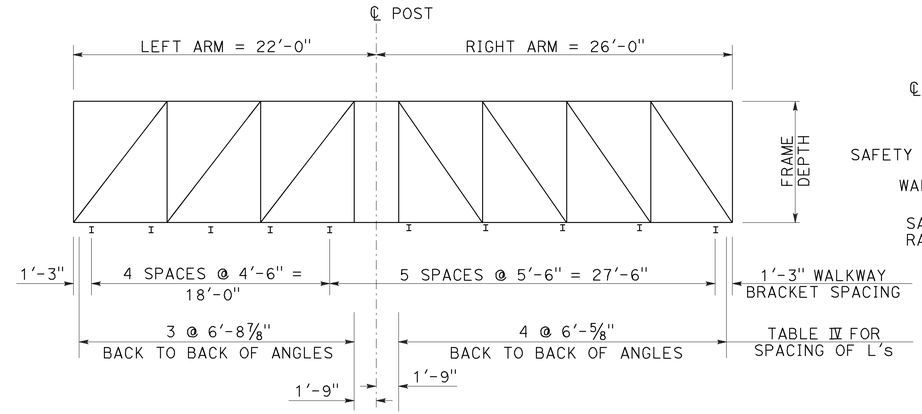

ELEVATION

UNBALANCED SINGLE POST TYPE

Example No. 1

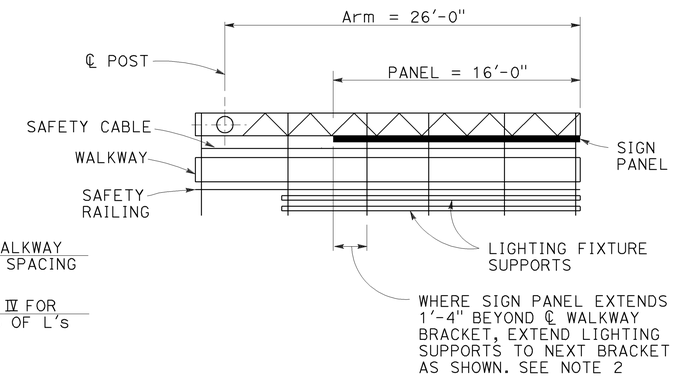

PLAN

CANTILEVER SINGLE POST TYPE

Example No. 2

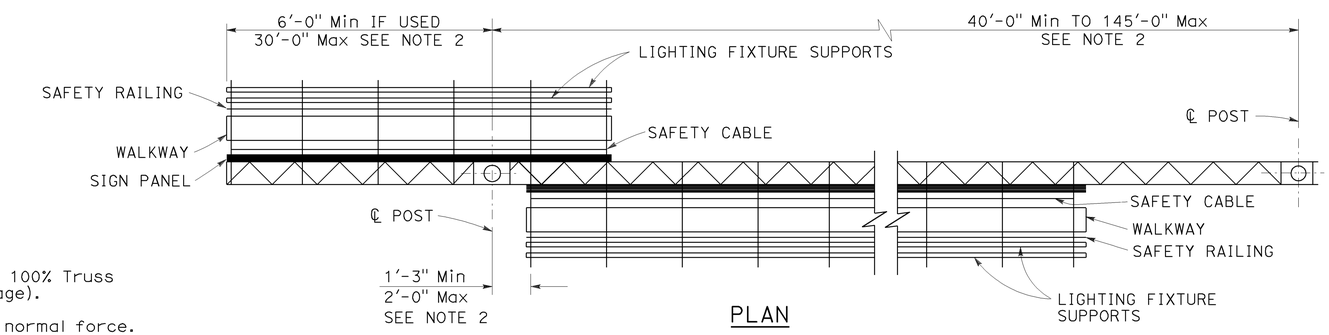

PLAN

TWO POST TYPE WITH CANTILEVER (PART DOUBLE-FACED)

Example No. 3

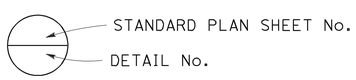

NOTES:

1. Signs are shown and dimensioned looking in the direction of traffic. Double faced signs are shown and dimensioned looking ahead along stationing.
2. Mandatory dimension limit.

GENERAL NOTES:

LOADING:

WIND LOADING:

Normal to face of sign: 40.3 psf on 100% Truss surface area (i.e. 100% panel coverage).

Transverse to face of sign: 20% of normal force.

WALKWAY LOADING:

Dead load +500 LB concentrated live load.

UNIT STRESSES:

STRUCTURAL STEEL: fy = 36,000 psi
REINFORCED CONCRETE: fy = 60,000 psi
f'c = 3600 psi
FOOTING SOIL PRESSURE: 2.5 ksf (spread footing)

MINIMUM CLEARANCE

Vertical roadway clearance 18'-0" (bottom of walkway system)

WELDING:

All welding continuous unless otherwise noted on the plans.

STATE OF CALIFORNIA
DEPARTMENT OF TRANSPORTATION

OVERHEAD SIGNS-TRUSS INSTRUCTIONS AND EXAMPLES

NO SCALE

RSP S1 DATED JULY 19, 2013 SUPERSEDES STANDARD PLAN S1 DATED MAY 20, 2011 - PAGE 334 OF THE STANDARD PLANS BOOK DATED 2010.

REVISED STANDARD PLAN RSP S1

7-11-13

Dist	COUNTY	ROUTE	POST MILES TOTAL PROJECT	SHEET No.	TOTAL SHEETS
06	Ker	5	6.0/9.0	32	43

REGISTERED CIVIL ENGINEER

July 19, 2013
PLANS APPROVAL DATE

REGISTERED PROFESSIONAL ENGINEER
Stanley P. Johnson
No. C57793
Exp. 3-31-14
CIVIL
STATE OF CALIFORNIA

THE STATE OF CALIFORNIA OR ITS OFFICERS OR AGENTS SHALL NOT BE RESPONSIBLE FOR THE ACCURACY OR COMPLETENESS OF SCANNED COPIES OF THIS PLAN SHEET.

TO ACCOMPANY PLANS DATED 1-21-14

TABLE XV

POST TYPE	PIPE NPS	PIPE THICKNESS	CAP PLATE SIZE FOR CHORD L's 5 x 5	CAP PLATE SIZE FOR CHORD L's 6 x 6	ROUND PEDESTAL PEDESTAL SIZE Dia	ROUND PEDESTAL VERTICAL ⌋-BARS EQUALLY SPACED TOTAL	ROUND PEDESTAL VERTICAL ⌋-BARS BAR SIZE	ROUND PEDESTAL SPIRAL BAR SIZE	ROUND PEDESTAL SPIRAL PITCH	SQUARE PEDESTAL PEDESTAL SIZE SQUARE	SQUARE PEDESTAL VERTICAL ⌋-BARS EQUALLY SPACED TOTAL	SQUARE PEDESTAL VERTICAL ⌋-BARS BAR SIZE	SQUARE PEDESTAL VERTICAL ⌋-BARS # OF BARS EA FACE	SQUARE PEDESTAL HOOP BAR SIZE	SQUARE PEDESTAL HOOP SPACING	SPREAD FOOTING (SEE NOTE 2)	SPREAD FOOTING REINFORCEMENT WIDTH TOP	SPREAD FOOTING REINFORCEMENT WIDTH BOTTOM	SPREAD FOOTING REINFORCEMENT LONGITUDINAL TOP	SPREAD FOOTING REINFORCEMENT LONGITUDINAL BOTTOM	SPREAD FOOTING REINFORCEMENT FOOTING STIRRUPS
II	14	1/2"	2'-0" x 2'-0" x 1"	2'-2" x 2'-2" x 1"	5'-3"	16	#10	#5	3 1/2"	5'-3"	16	#10	5	#5	3 1/2"	12'-0" x 14'-0" x 2'-6"	14-#6	14-#7	13-#9	13-#9	#5 @ 12
III	16		2'-2" x 2'-2" x 1"	2'-4" x 2'-4" x 1"												12'-0" x 14'-0" x 2'-6"	15-#6	15-#7			
IV	18		2'-4" x 2'-4" x 1"	2'-6" x 2'-6" x 1"												12'-0" x 14'-0" x 2'-6"	15-#6	15-#7			
V	20		2'-6" x 2'-6" x 1"	2'-8" x 2'-8" x 1"												13'-0" x 14'-0" x 2'-6"	15-#6	15-#7	14-#9	14-#9	
VI	24		2'-10" x 2'-10" x 1"	3'-0" x 3'-0" x 1"	5'-9"		#11			5'-9"		#11				13'-0" x 16'-0" x 2'-6"	17-#7	17-#7		14-#11	
VII	24	3/4"														13'-0" x 17'-0" x 2'-6"	18-#7	18-#7			
VIII	24	31/32"														13'-0" x 18'-0" x 2'-6"	19-#7	19-#7			
IX	24	31/32"														13'-0" x 18'-0" x 2'-6"	19-#7	19-#7			

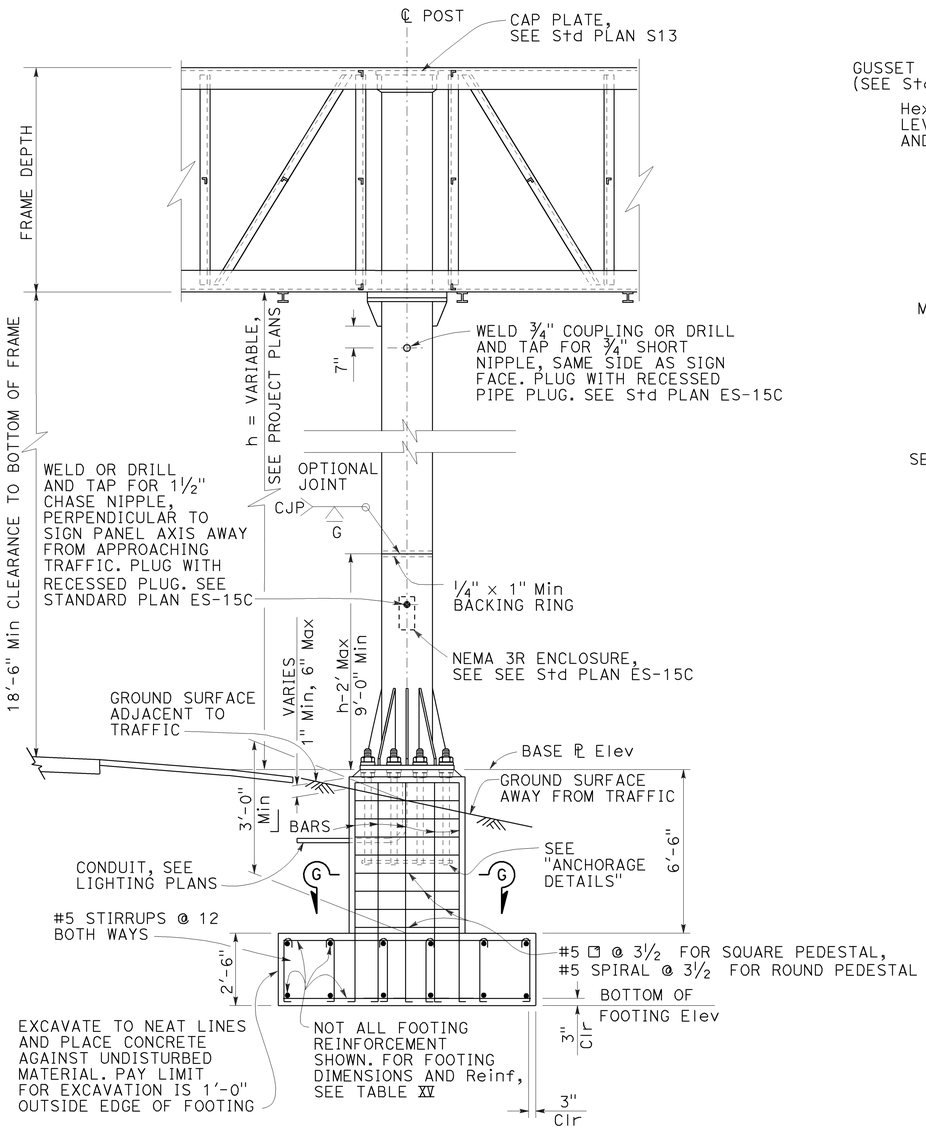

ELEVATION
See Note 5

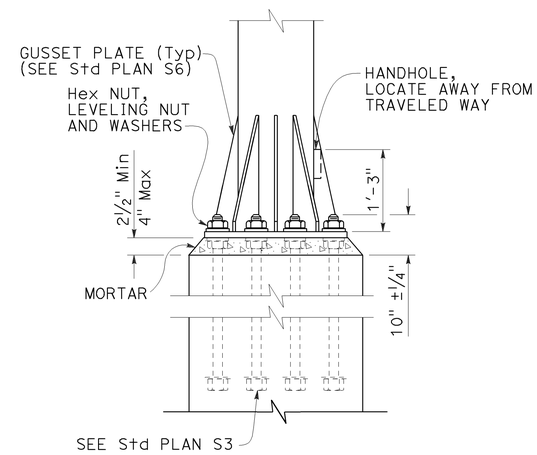

ELEVATION

ANCHORAGE DETAILS

NOTES:

1. For "General Notes", see Revised Standard Plan RSP S1.
2. Longer side of footing (longitudinal) shall be normal to axis of sign.
3. Backfill shall be in place prior to erection of post.
4. Thread upper 10" of anchor bolts and galvanize upper 1'-0".
5. Spread footing with square pedestal foundation shown, use Pile Foundation when shown on the Project Plans. For pile foundation details, see Standard Plan S8.
6. Anchor plates may be retained with hexagon nut or formed head as alternatives to details shown.
7. On single post sign structures, the post shall be raked out of plumb, with the use of the leveling nuts to make the bottom of the sign frame level.
8. At final position of post all top and bottom nuts shall be tightened against base plate.
9. When foundation is located on a steep slope with exposed face of concrete adjacent to traffic, see "Detail C" on Standard Plan S8, as applicable.
10. Slope protection required when indicated on the Project Plans.

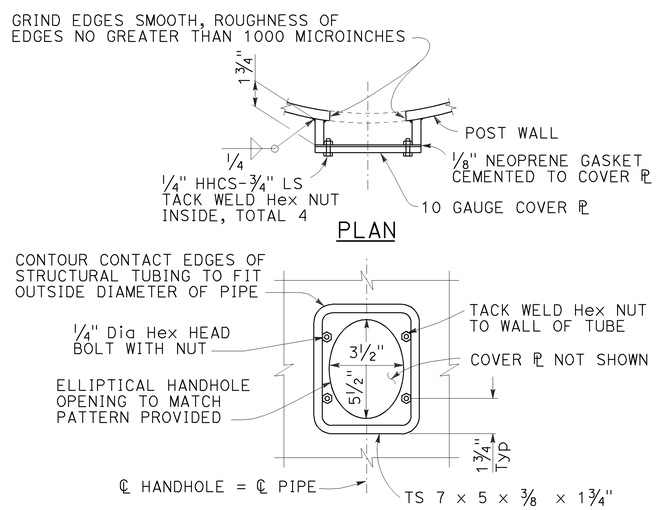

ELEVATION

TYPICAL DETAILS OF HANDHOLE AND COVER

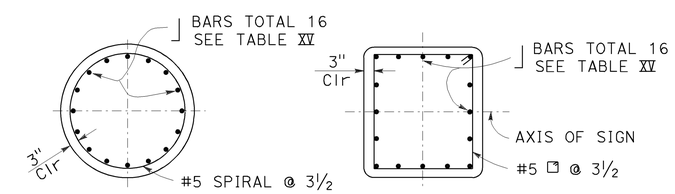

SECTION G-G
ROUND PEDESTAL

SECTION G-G
SQUARE PEDESTAL

STATE OF CALIFORNIA
DEPARTMENT OF TRANSPORTATION

OVERHEAD SIGNS-TRUSS SINGLE POST TYPE POST TYPES II THROUGH IX

NO SCALE

RSP S2 DATED JULY 19, 2013 SUPERSEDES STANDARD PLAN S2
DATED MAY 20, 2011 - PAGE 335 OF THE STANDARD PLANS BOOK DATED 2010.

REVISED STANDARD PLAN RSP S2

2010 REVISED STANDARD PLAN RSP S2

7-11-13

Dist	COUNTY	ROUTE	POST MILES TOTAL PROJECT	SHEET No.	TOTAL SHEETS
06	Ker	5	6.0/9.0	33	43

Theresa Gabriel
REGISTERED ELECTRICAL ENGINEER

July 19, 2013
PLANS APPROVAL DATE

REGISTERED PROFESSIONAL ENGINEER
Theresa Aziz Gabriel
No. E15129
Exp. 6-30-14
ELECTRICAL
STATE OF CALIFORNIA

THE STATE OF CALIFORNIA OR ITS OFFICERS OR AGENTS SHALL NOT BE RESPONSIBLE FOR THE ACCURACY OR COMPLETENESS OF SCANNED COPIES OF THIS PLAN SHEET.

TO ACCOMPANY PLANS DATED 1-21-14

LEGEND:

AB	ABANDON. IF APPLIED TO CONDUIT, REMOVE CONDUCTORS
BC	INSTALL PULL BOX IN EXISTING CONDUIT RUN
BP	PEDESTRIAN BARRICADE, TYPE AS INDICATED ON PLAN
CB	INSTALL CONDUIT INTO EXISTING PULL BOX
CC	CONNECT NEW AND EXISTING CONDUIT. REMOVE EXISTING CONDUCTORS AND INSTALL CONDUCTORS AS INDICATED
CF	CONDUIT TO REMAIN FOR FUTURE USE. REMOVE CONDUCTORS. INSTALL PULL TAPE
DH	DETECTOR HANDHOLE
FA	FOUNDATION TO BE ABANDONED
IS	INSTALL SIGN ON SIGNAL MAST ARM
NS	NO SLIP BASE ON STANDARD
PEC	PHOTOELECTRIC CONTROL
PEU	PHOTOELECTRIC UNIT
RC	EQUIPMENT OR MATERIAL TO BE REMOVED AND BECOME THE PROPERTY OF THE CONTRACTOR
RE	REMOVE ELECTROLIER, FUSES AND BALLAST. TAPE ENDS OF CONDUCTORS
RL	RELOCATE EQUIPMENT
RR	REMOVE AND REUSE EQUIPMENT
RS	REMOVE AND SALVAGE EQUIPMENT
SC	SPLICE NEW TO EXISTING CONDUCTORS
SD	SERVICE DISCONNECT
TSP	TELEPHONE SERVICE POINT

ABBREVIATIONS

APS	ACCESSIBLE PEDESTRIAN SIGNAL
BBS	BATTERY BACKUP SYSTEM
BC	BOLT CIRCLE
BPB	BICYCLE PUSH BUTTON
C	CONDUIT
CB	CIRCUIT BREAKER
CCTV	CLOSED CIRCUIT TELEVISION
Ckt	CIRCUIT
CMS	CHANGEABLE MESSAGE SIGN
Ctid	CALTRANS IDENTIFICATION
Comm	COMMUNICATION
DLC	LOOP DETECTOR LEAD-IN CABLE
EMS	EXTINGUISHABLE MESSAGE SIGN
EVUC	EMERGENCY VEHICLE UNIT CABLE
EVUD	EMERGENCY VEHICLE UNIT DETECTOR
FB	FLASHING BEACON
FBCA	FLASHING BEACON CONTROL ASSEMBLY
FBS	FLASHING BEACON WITH SLIP BASE
FO	FIBER OPTIC
G	EQUIPMENT GROUNDING CONDUCTOR
GB	GROUND BUS
GFCI	GROUND FAULT CIRCUIT INTERRUPTER
HAR	HIGHWAY ADVISORY RADIO
Hex	HEXAGONAL
HPS	HIGH PRESSURE SODIUM
IISNS	INTERNALLY ILLUMINATED STREET NAME SIGN
ISL	INDUCTION SIGN LIGHTING
LED	LIGHT EMITTING DIODE
LMA	LUMINAIRE MAST ARM
LPS	LOW PRESSURE SODIUM
Ltg	LIGHTING
Lum	LUMINAIRE
M	METERED
MAT	MAST ARM MOUNTING TOP ATTACHMENT
MAS	MAST ARM MOUNTING SIDE ATTACHMENT
M/M	MULTIPLE TO MULTIPLE TRANSFORMER
Mtg	MOUNTING
MV	MERCURY VAPOR LIGHTING FIXTURE
MVDS	MICROWAVE VEHICLE DETECTION SYSTEM
N	NEUTRAL (GROUNDED CONDUCTOR)
NB	NEUTRAL BUS
NC	NORMALLY CLOSE
NO	NORMALLY OPEN
P	CIRCUIT BREAKER'S POLE
PB	PULL BOX
PBA	PUSH BUTTON ASSEMBLY
PEC	PHOTOELECTRIC CONTROL
Ped	PEDESTRIAN
PEU	PHOTOELECTRIC UNIT
PT	CONDUIT WITH PULL TAPE
RE	RELOCATED EQUIPMENT
RM	RAMP METERING
RWIS	ROADSIDE WEATHER INFORMATION SYSTEM
SB	SLIP BASE
SIC	SIGNAL INTERCONNECT CABLE
Sig	SIGNAL
SMA	SIGNAL MAST ARM
SNS	STREET NAME SIGN
SP	SERVICE POINT
TDC	TELEPHONE DEMARCATION CABINET
TMS	TRAFFIC MONITORING STATION
TOS	TRAFFIC OPERATIONS SYSTEM
Veh	VEHICLE
VIVDS	VIDEO IMAGE VEHICLE DETECTION SYSTEM
WIM	WEIGH-IN-MOTION
Xfmr	TRANSFORMER

SOFFIT AND WALL MOUNTED LUMINAIRES

PENDANT, 70 W HPS UNLESS OTHERWISE SPECIFIED

FLUSH, 70 W HPS UNLESS OTHERWISE SPECIFIED

WALL SURFACE, 70 W HPS UNLESS OTHERWISE SPECIFIED

EXISTING SOFFIT OR WALL LUMINAIRE TO REMAIN UNMODIFIED

EXISTING SOFFIT OR WALL LUMINAIRE TO BE MODIFIED AS SPECIFIED

NOTE:

Arrow indicates "street side" of luminaire.

COMMONLY USED SYMBOLS FOR UNITED STATES CUSTOMARY UNITS OF MEASUREMENT:

SYMBOL USED	DEFINITIONS
Ω	OHMS
min	MINUTE
s	SECOND
bps	BITS PER SECOND
Bps	BYTES PER SECOND
A	AMPERE
V	VOLT
V(dc)	VOLT (DIRECT CURRENT)
V(ac)	VOLT (ALTERNATING CURRENT)
FC	FOOT - CANDLE
W	WATTS
VA	VOLT-AMPERE
M	MEGA
k	KILO
m	MILLI
μ	MICRO
P	PICO
Hz	HERTZ

MISCELLANEOUS ELECTROLIERS

NEW	EXISTING	
		LUMINAIRE ON WOOD POLE
		NON-STANDARD ELECTROLIER (SEE PROJECT NOTES OR PROJECT PLANS)
		CITY ELECTROLIER
		ELECTROLIER FOUNDATION (FUTURE INSTALLATION)

NOTES:

1. HPS luminaires shall be 310 W HPS when installed on Type 21, 21D, 30, 31 and 32 Standards, unless otherwise specified. HPS luminaires shall be 200 W when installed on other type standards or poles, unless otherwise specified.
2. LED luminaires shall be 235 W when installed on Type 21, 21D, 30, 31 and 32 Standards, unless otherwise specified. LED luminaires shall be 165 W when installed on other type standards or poles, unless otherwise specified.
3. Luminaires shall be the cutoff type, ANSI Type III medium cutoff lighting distribution, unless otherwise specified.

STANDARD ELECTROLIER

NEW	EXISTING	STANDARD TYPE
		15
		15D
		15 STRUCTURE
		15D STRUCTURE
		21
		21D
		21 STRUCTURE
		21D STRUCTURE
		30
		31
		32

STATE OF CALIFORNIA
DEPARTMENT OF TRANSPORTATION

ELECTRICAL SYSTEMS (LEGEND AND ABBREVIATIONS)

NO SCALE

RSP ES-1A DATED JULY 19, 2013 SUPERSEDES STANDARD PLAN ES-1A DATED MAY 20, 2011 - PAGE 425 OF THE STANDARD PLANS BOOK DATED 2010.

REVISED STANDARD PLAN RSP ES-1A

2010 REVISED STANDARD PLAN RSP ES-1A

7-15-13

Dist	COUNTY	ROUTE	POST MILES TOTAL PROJECT	SHEET No.	TOTAL SHEETS
06	Ker	5	6.0/9.0	34	43

Theresa Gabriel
REGISTERED ELECTRICAL ENGINEER

July 19, 2013
PLANS APPROVAL DATE

REGISTERED PROFESSIONAL ENGINEER
Theresa Aziz Gabriel
No. E15129
Exp. 6-30-14
ELECTRICAL
STATE OF CALIFORNIA

THE STATE OF CALIFORNIA OR ITS OFFICERS OR AGENTS SHALL NOT BE RESPONSIBLE FOR THE ACCURACY OR COMPLETENESS OF SCANNED COPIES OF THIS PLAN SHEET.

TO ACCOMPANY PLANS DATED 1-21-14

CONDUIT

NEW	EXISTING	
		LIGHTING CONDUIT, UNLESS OTHERWISE INDICATED OR NOTED
		TRAFFIC SIGNAL CONDUIT
C	c	COMMUNICATION CONDUIT
T	t	TELEPHONE CONDUIT
F	f	FIRE ALARM CONDUIT
FO	fo	FIBER OPTIC CONDUIT
		CONDUIT TERMINATION
R	r	CONDUIT RISER ATTACHED TO THE STRUCTURE OR SERVICE POLE

SERVICE EQUIPMENT

NEW	EXISTING	
OH	oh	OVERHEAD LINES
U	U	WOOD POLE, "U" INDICATES UTILITY OWNED
		POLE GUY WITH ANCHOR
		UTILITY TRANSFORMER - GROUND MOUNTED
III	III	SERVICE EQUIPMENT ENCLOSURE TYPE. DOOR INDICATES FRONT OF ENCLOSURE
T	t	TELEPHONE DEMARCATION CABINET

POLE-MOUNTED SERVICE DESIGNATION

TYPE H SERVICE, 28'-10" — TYPE OF INSTALLATION AND POLE HEIGHT ABOVE GRADE

FLASHING BEACON

NEW	EXISTING	
R	R	FLASHING BEACON (ONE VEHICLE SIGNAL HEAD WITH BACKPLATE AND VISOR) "R" INDICATES RED INDICATION, "Y" INDICATES YELLOW INDICATION
Y Y	Y Y	FLASHING BEACON WITH TYPE 15-FBS STANDARD AND A SIGN.
R R	R R	FLASHING BEACON WITH TYPES 9, 9A OR 9B SIGN UNLESS OTHERWISE SPECIFIED OR INDICATED

SIGNAL EQUIPMENT

NEW	EXISTING	
C	C	PEDESTRIAN SIGNAL HEAD "C" INDICATES COUNTDOWN PEDESTRIAN HEAD
		PUSH BUTTON ASSEMBLY POST
		PEDESTRIAN BARRICADE
		VEHICLE SIGNAL HEAD (WITH BACKPLATE AND 3-SECTIONS: RED, YELLOW AND GREEN)
		VEHICLE SIGNAL HEAD WITH ANGLE VISOR
PV	PV	MODIFICATIONS OF BASIC SYMBOL: "L" INDICATES ALL NON-ARROW SECTIONS LOUVERED "LG" INDICATES LOUVERED GREEN SECTION ONLY "PV" INDICATES ALL 12" SECTIONS PROGRAMMED VISIBILITY "8" INDICATES ALL 8" SECTIONS (ONLY WHEN SPECIFIED)
		VEHICLE SIGNAL HEAD CONSISTING OF RED, YELLOW AND GREEN LEFT ARROW SECTIONS
		VEHICLE SIGNAL HEAD CONSISTING OF RED AND YELLOW SECTIONS WITH AN UP GREEN ARROW SECTION
		VEHICLE SIGNAL HEAD (5 SECTION) CONSISTING OF RED, YELLOW AND GREEN SECTIONS WITH YELLOW AND GREEN RIGHT ARROW SECTIONS
		TYPE 15TS STANDARD WITH VEHICLE SIGNAL HEAD AND LUMINAIRE
		TYPE 21TS STANDARD WITH VEHICLE SIGNAL HEAD AND LUMINAIRE
		STANDARD WITH LUMINAIRE AND SIGNAL MAST ARMS AND ATTACHED VEHICLE SIGNAL HEADS
		TYPE 1 STANDARD WITH ATTACHED VEHICLE SIGNAL HEADS
		STANDARD WITH A SIGNAL MAST ARM, ATTACHED VEHICLE SIGNAL HEADS AND INTERNALLY ILLUMINATED STREET NAME SIGN
		CONTROLLER ASSEMBLY. DOOR INDICATES FRONT OF CABINET

SIGNAL EQUIPMENT Cont

NEW	EXISTING	
		GUARD POST
		TYPE 1 STANDARD WITH RAMP METERING SIGN
		OPTICAL DETECTOR FOR THE EMERGENCY VEHICLE DETECTION SYSTEM

NOTES:

1. All signal sections shall be 12" unless shown otherwise.
2. Signal heads shall be provided with backplates unless shown otherwise.

ILLUMINATED OVERHEAD SIGN

NEW	EXISTING	
		SINGLE POST, SINGLE ILLUMINATED SIGN, BALANCED BUTTERFLY
		SINGLE POST, DOUBLE ILLUMINATED SIGN, BALANCED BUTTERFLY
		SINGLE POST, SINGLE ILLUMINATED SIGN, FULL CANTILEVER
		DOUBLE POST, SINGLE ILLUMINATED SIGN
		SINGLE ILLUMINATED SIGN MOUNTED ON STRUCTURE
		DOUBLE POST, SINGLE ILLUMINATED SIGN WITH ELECTROLIER

STATE OF CALIFORNIA
DEPARTMENT OF TRANSPORTATION

ELECTRICAL SYSTEMS (LEGEND AND ABBREVIATIONS)

NO SCALE

RSP ES-1B DATED JULY 19, 2013 SUPERSEDES STANDARD PLAN ES-1B DATED MAY 20, 2011 - PAGE 426 OF THE STANDARD PLANS BOOK DATED 2010.

REVISED STANDARD PLAN RSP ES-1B

2010 REVISED STANDARD PLAN RSP ES-1B

7-15-13

Dist	COUNTY	ROUTE	POST MILES TOTAL PROJECT	SHEET No.	TOTAL SHEETS
06	Ker	5	6.0/9.0	35	43

Theresa Gabriel
REGISTERED ELECTRICAL ENGINEER

July 19, 2013
PLANS APPROVAL DATE

REGISTERED PROFESSIONAL ENGINEER
Theresa Aziz Gabriel
No. E15129
Exp. 6-30-14
ELECTRICAL
STATE OF CALIFORNIA

THE STATE OF CALIFORNIA OR ITS OFFICERS OR AGENTS SHALL NOT BE RESPONSIBLE FOR THE ACCURACY OR COMPLETENESS OF SCANNED COPIES OF THIS PLAN SHEET.

TO ACCOMPANY PLANS DATED 1-21-14

EQUIPMENT IDENTIFICATION

ILLUMINATED SIGN IDENTIFICATION NUMBER:

SIGN No. 12345

10 ISL SCI 1.0

- SIGN NUMBER - PLACE ON POST OR STRUCTURE
- TRANSFORMER RATING (kVA)
- LIGHTING CONTROL TYPE
- NUMBER AND TYPE OF FIXTURES

DO NOT PLACE ON STANDARD OR STRUCTURE

ELECTROLIER OR EQUIPMENT IDENTIFICATION NUMBER:

12345 - 15'-0"

- MAST ARM LENGTH, IF SHOWN. DO NOT PLACE ON STANDARD OR STRUCTURE
- EQUIPMENT NUMBER - PLACE ON STANDARD OR STRUCTURE. EXISTING EQUIPMENT NUMBERS ARE SHOWN IN PARENTHESIS

CONDUIT AND CONDUCTOR IDENTIFICATION:

1½"C, 2#10, 15#14, 2 DLC, 12P#18

- PAIR
- NUMBER AND SIZE OF CONDUCTORS AND CABLES
- SIZE OF CONDUIT IN INCHES

ø1, ø2, ø2P, etc.	TRAFFIC PHASE IDENTIFICATION FOR SIGNAL FACES, DETECTORS AND PHASE DIAGRAMS
1 2 3	LEGEND NUMBERS
A B C	EQUIPMENT, SIGNAL POLES, INSTALLATION OR ITEMS
1 2 3	CONDUIT RUN NUMBERS

SIGNAL AND LIGHTING STANDARD (TYPICAL DESIGNATION):

19A - 3 - 100

- WIND VELOCITY = 100 mph
- CASE 3 ARM LOADING
- STANDARD TYPE
- STANDARD PLAN SHEET NUMBER
- DETAIL, NUMBER, SECTION, TYPE OR ELEVATION

MISCELLANEOUS EQUIPMENT

NEW	EXISTING	
CMS	cms	CHANGEABLE MESSAGE SIGN
		CLOSED CIRCUIT TELEVISION CAMERA
		HIGHWAY ADVISORY RADIO POLE AND ANTENNA
EMS	ems	EXTINGUISHABLE MESSAGE SIGN
M V	m v	DETECTION DEVICE M = MICROWAVE SENSOR V = VIDEO IMAGE SENSOR

WIRING DIAGRAM LEGEND

- EXTERNAL CONDUCTOR
- CONDUCTOR OR BUS
- TIE POINT
- CONTACTOR COIL
- CONTACTOR, NO CONTACT
- TERMINAL BLOCKS
- CONTACTOR, NC CONTACT
- ENCLOSURE BOND
- GROUNDING ELECTRODE
- CIRCUIT BREAKER
- RECEPTACLE

PULL BOXES

NEW	EXISTING	
		PULL BOX, No. 5 UNLESS OTHERWISE INDICATED OR NOTED
3	9A(21)	PULL BOX, ADDITIONAL DESIGNATIONS OR DESCRIPTIONS

3 No. 3½ PULL BOX
5 No. 5 PULL BOX
6 No. 6 PULL BOX
7 No. 7 (CEILING PULL BOX)
8 No. 8 (PENDANT SOFFIT PULL BOX)
9 No. 9 PULL BOX
9A No. 9A PULL BOX

(C) COMMUNICATIONS PULL BOX
(E) PULL BOX WITH EXTENSION
(S) SPRINKLER CONTROL PULL BOX
(21) ANCHOR BOLTS AND CONDUIT FOR FUTURE INSTALLATION OF TYPE 21 STANDARD
(T) TRAFFIC PULL BOX

VEHICLE DETECTORS

5 J 9 U

- VEHICLE DETECTOR DESIGNATION
- U = UPPER
  L = LOWER
- SLOT NUMBER IN INPUT FILE
- INPUT FILE (I OR J)
- PHASE

NEW	EXISTING	
		TYPE A DETECTOR LOOP. OUTLINE OF SAWCUT SHOWN
		TYPE B DETECTOR LOOP. OUTLINE OF SAWCUT SHOWN
		TYPE C DETECTOR LOOP. OUTLINE OF SAWCUT SHOWN
		TYPE D DETECTOR LOOP. OUTLINE OF SAWCUT SHOWN
		TYPE E DETECTOR LOOP. OUTLINE OF SAWCUT SHOWN
		TYPE Q DETECTOR LOOP. OUTLINE OF SAWCUT SHOWN
		MAGNETIC DETECTOR
DH	dh	DETECTOR HANDHOLE
		MICROWAVE OR VIDEO DETECTION ZONE

STATE OF CALIFORNIA
DEPARTMENT OF TRANSPORTATION

ELECTRICAL SYSTEMS (LEGEND AND ABBREVIATIONS)

NO SCALE

RSP ES-1C DATED JULY 19, 2013 SUPERSEDES STANDARD PLAN ES-1C DATED MAY 20, 2011 - PAGE 427 OF THE STANDARD PLANS BOOK DATED 2010.

REVISED STANDARD PLAN RSP ES-1C

2010 REVISED STANDARD PLAN RSP ES-1C

7-11-13

Dist	COUNTY	ROUTE	POST MILES TOTAL PROJECT	SHEET No.	TOTAL SHEETS
06	Ker	5	6.0/9.0	36	43

REGISTERED CIVIL ENGINEER

July 19, 2013
PLANS APPROVAL DATE

REGISTERED PROFESSIONAL ENGINEER
Stanley P. Johnson
No. C57793
Exp. 3-31-14
CIVIL
STATE OF CALIFORNIA

THE STATE OF CALIFORNIA OR ITS OFFICERS OR AGENTS SHALL NOT BE RESPONSIBLE FOR THE ACCURACY OR COMPLETENESS OF SCANNED COPIES OF THIS PLAN SHEET.

TO ACCOMPANY PLANS DATED 1-21-14

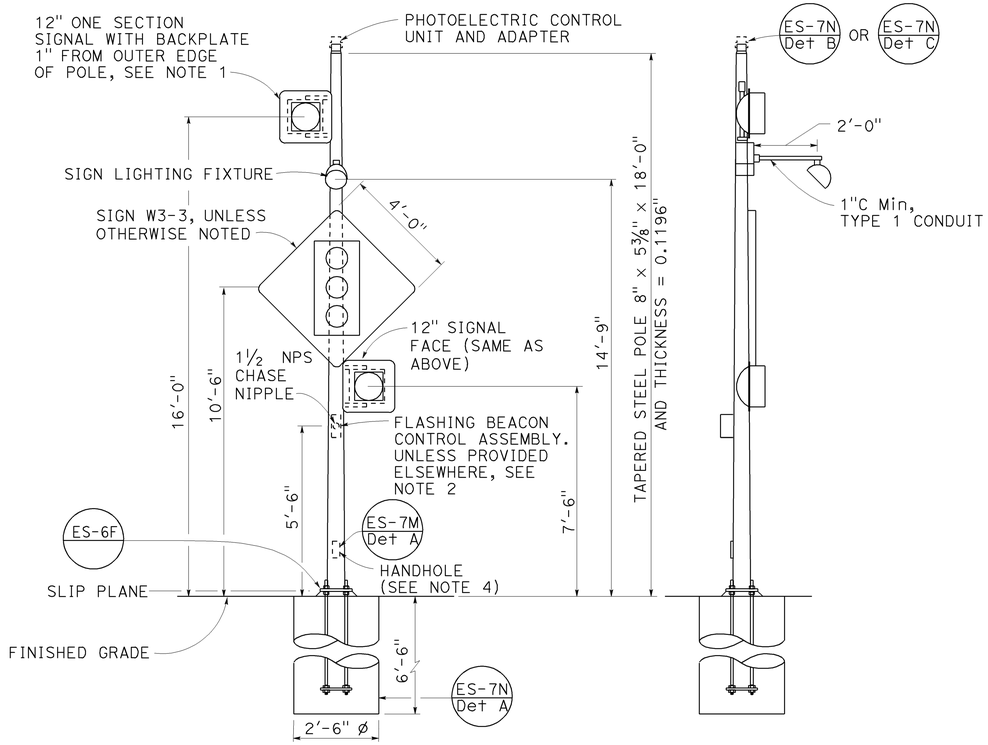

FRONT VIEW

SIDE VIEW

TYPE 15-FBS
ADVANCE FLASHING BEACON WITH SLIP BASE INSTALLATION
DETAIL A

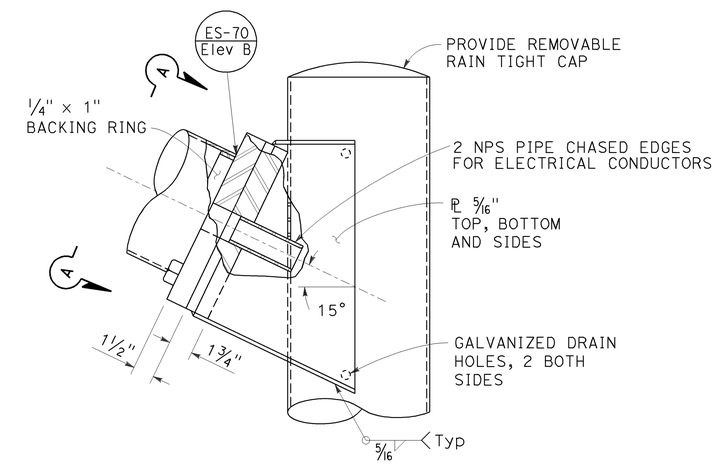

ELEVATION B

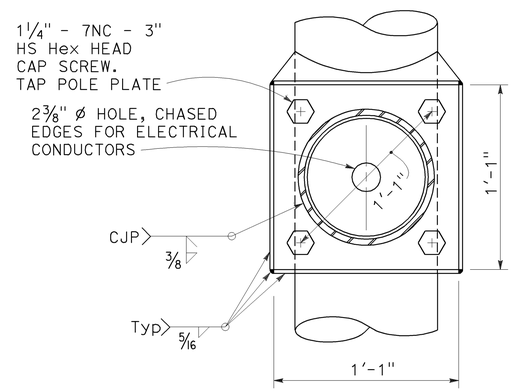

VIEW A-A

FLASHING BEACON MAST ARM CONNECTION DETAIL
DETAIL B

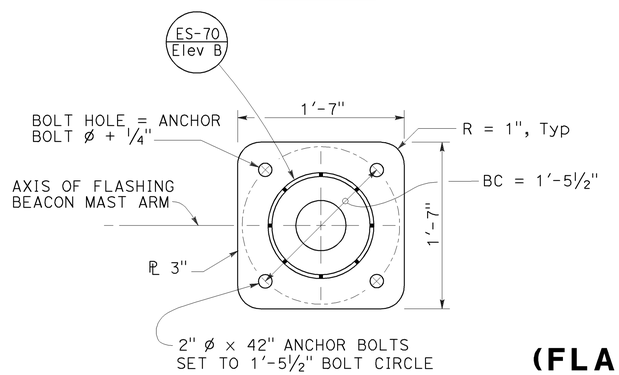

BASE PLATE

DETAIL C

NOTES:

1. See Revised Standard Plan RSP ES-4A and Standard Plan ES-4D for attachment fitting details.
2. For wiring diagram, see Standard Plan ES-14B.
3. For additional notes and details, see Standard Plans ES-7M and ES-7N.
4. Handhole shall be located on the downstream side of traffic.
5. See project plans for type of standard to be installed.

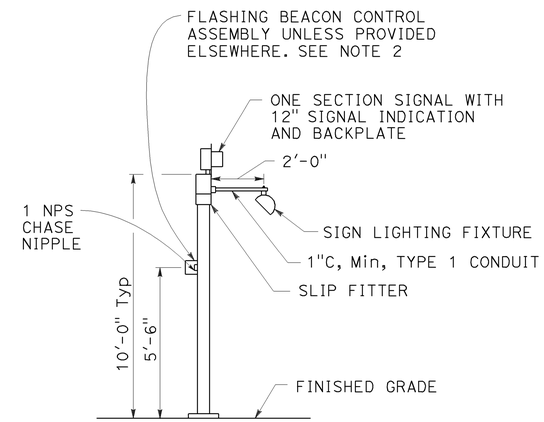

TYPE 1-A, 1-B, 1-C AND 1-D
ADVANCE FLASHING BEACON INSTALLATION
DETAIL D
See Note 5

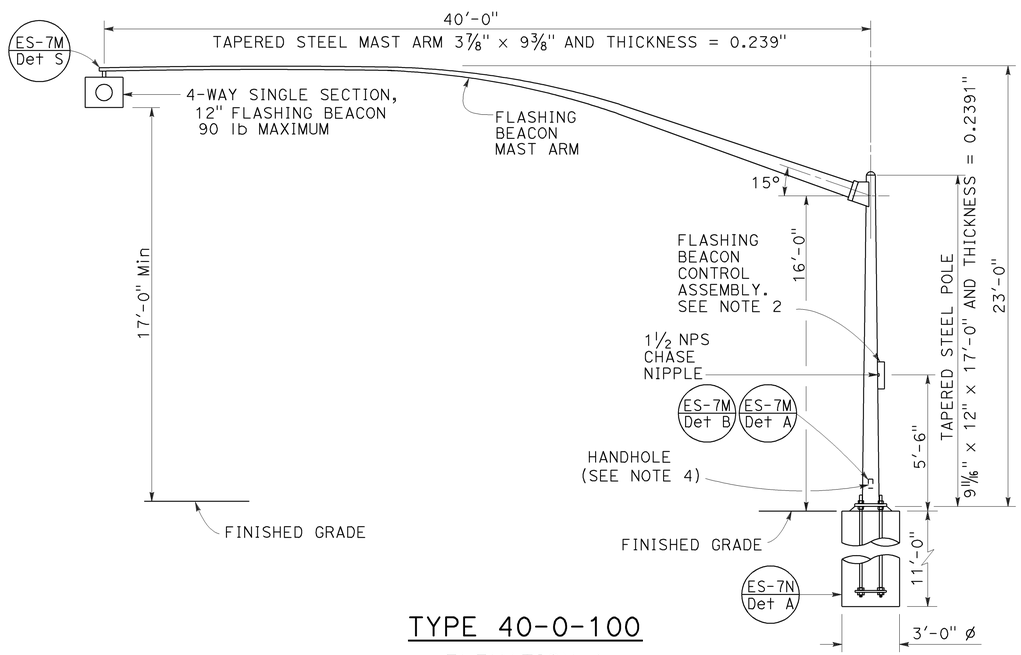

TYPE 40-0-100
ELEVATION A

STATE OF CALIFORNIA
DEPARTMENT OF TRANSPORTATION

ELECTRICAL SYSTEMS (FLASHING BEACON ON A TYPE 1, TYPE 15-FBS AND TYPE 40 STANDARD)

NO SCALE

RSP ES-7J DATED JULY 19, 2013 SUPERSEDES STANDARD PLAN ES-7J DATED MAY 20, 2011 - PAGE 471 OF THE STANDARD PLANS BOOK DATED 2010.

REVISED STANDARD PLAN RSP ES-7J

2010 REVISED STANDARD PLAN RSP ES-7J

6-26-13

DIST	COUNTY	ROUTE	POST MILES TOTAL PROJECT	SHEET NO.	TOTAL SHEETS
06	Ker	5	6.0/9.0	37	43

Theresa Gabriel
REGISTERED ELECTRICAL ENGINEER

July 19, 2013
PLANS APPROVAL DATE

REGISTERED PROFESSIONAL ENGINEER Theresa Aziz Gabriel No. E15129 Exp. 6-30-14 ELECTRICAL STATE OF CALIFORNIA

THE STATE OF CALIFORNIA OR ITS OFFICERS OR AGENTS SHALL NOT BE RESPONSIBLE FOR THE ACCURACY OR COMPLETENESS OF SCANNED COPIES OF THIS PLAN SHEET.

TO ACCOMPANY PLANS DATED 1-21-14

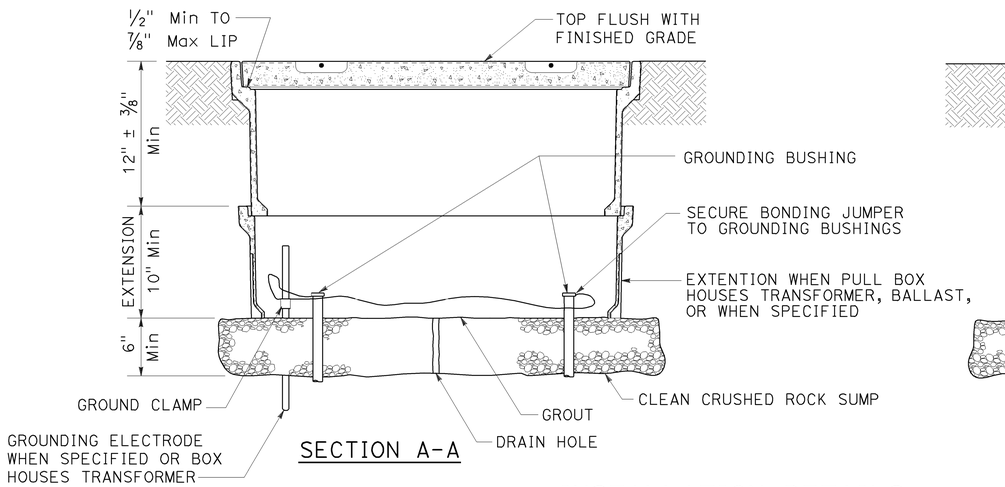

SECTION A-A

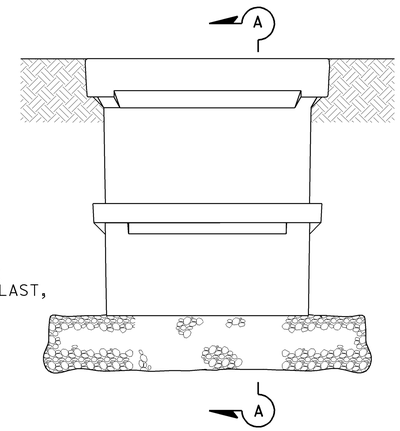

SIDE VIEW

INSTALLATION DETAILS

DETAIL A

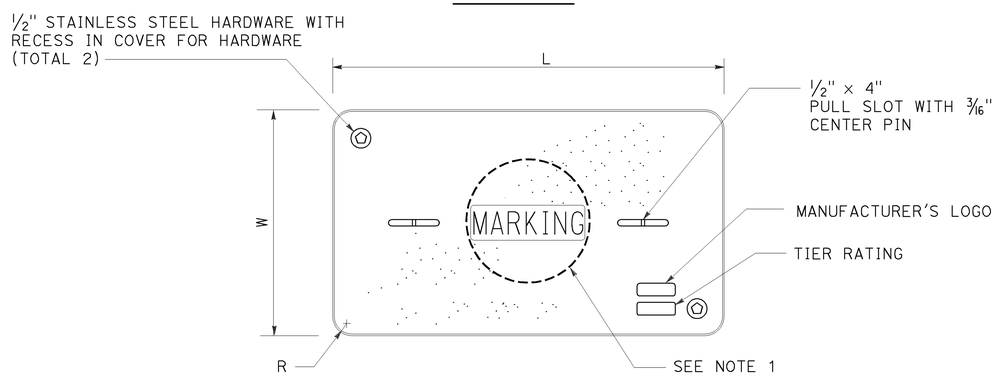

COVER TOP VIEW

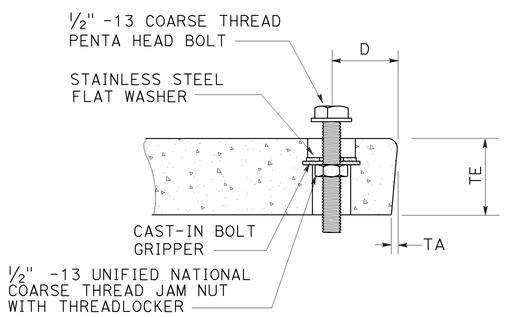

TYPICAL COVER CAPTIVE BOLT

OR SIMILAR

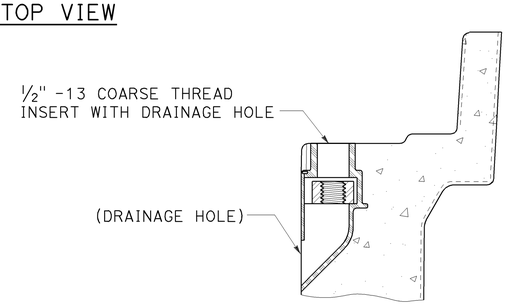

TYPICAL THREADED INSERT

OR SIMILAR

DIMENSION TABLE

PULL BOX	PULL BOX			COVER						
	MINIMUM DEPTH BOX	MINIMUM DEPTH EXTENSION	MAXIMUM WEIGHT	L	W	R	TE	TA	D	MAXIMUM WEIGHT
No. 3½	12"	N/A	40 lb	1′ - 3⅜"	10⅛"	1⅜"	2"	⅛"	1¾"	30 lb
No. 5	12"	10"	55 lb	1′ - 11¼"	1′ - 1¾"	1⅜"	2"	⅛"	1¾"	60 lb
No. 6	12"	10"	70 lb	2′ - 6½"	1′ - 5½"	1⅜"	2"	⅛"	2"	85 lb

NOTES:

1. Pull box covers shall be marked as follows: "SERVICE" Service circuits between service point and service disconnect; "SPRINKLER-CONTROL" sprinkler control circuits, 50 V or less; "CALTRANS" on all pull boxes, except pull boxes marked "SPRINKLER-CONTROL"; and "TELEPHONE" Telephone service;
   - A) No. 3½ pull box.
     - 1) "SIGNAL" - Traffic signal circuits with or without lighting or sign lighting circuits.
     - 2) "LIGHTING" - Lighting or sign lighting circuits where voltage is under 600 V.
   - B) No. 5, 6, 9 or 9A pull box.
     - 1) "TRAFFIC SIGNAL" - Traffic signal circuits with or without lighting or sign lighting circuits.
     - 2) "LIGHTING" - Lighting or sign lighting circuits where voltage is under 600 V.
     - 3) "LIGHTING-HIGH VOLTAGE" - Lighting or sign lighting circuits where voltage is above 600 V.
     - 4) "IRRIGATION" - Circuits to irrigation controller 120 V or more.
     - 5) "RAMP METER" - Ramp meter circuits.
     - 6) "COUNT STATION" - Count or speed monitor circuits.
     - 7) "COMMUNICATIONS" - Communication circuits.
     - 8) "TOS COMMUNICATIONS" - TOS communication line.
     - 9) "TOS POWER" - TOS power.
     - 10) "TDC POWER" - Telephone demarcation cabinet power.
     - 11) "CCTV" - Closed circuit television circuits.
     - 12) "TMS" - Traffic monitoring station circuits.
     - 13) "CMS" - Changeable message sign circuits.
     - 14) "HAR" - Highway advisory radio circuits.
     - 15) "BOOSTER PUMP" - Booster pump circuit.
2. The nominal dimensions of the opening in which the cover sets shall be the same as the cover dimensions except the length and width dimensions shall be ⅛" greater.
3. Covers and boxes shall be interchangeable with California standard male and female gages. When interchanged with a standard male or female gage, the top surfaces shall be flush within ⅛". Top outside radius of covers and pull boxes shall have a ⅛" radius.
4. Pull box extension may be another pull box as long as the bottom edge of the pull box can fit into the cover opening.
5. All dimensions for the cover for non-traffic pull box are nominal values.

STATE OF CALIFORNIA
DEPARTMENT OF TRANSPORTATION

ELECTRICAL SYSTEMS (NON-TRAFFIC PULL BOX)

NO SCALE

RSP ES-8A DATED JULY 19, 2013 SUPERSEDES RSP ES-8A DATED JANUARY 20, 2012 THAT SUPPLEMENTS THE STANDARD PLANS BOOK DATED 2010.

REVISED STANDARD PLAN RSP ES-8A

2010 REVISED STANDARD PLAN RSP ES-8A

7-15-13

DIST	COUNTY	ROUTE	POST MILES TOTAL PROJECT	SHEET NO.	TOTAL SHEETS
06	Ker	5	6.0/9.0	38	43

Theresa Gabriel
REGISTERED ELECTRICAL ENGINEER

July 19, 2013
PLANS APPROVAL DATE

REGISTERED PROFESSIONAL ENGINEER
Theresa Aziz Gabriel
No. E15129
Exp. 6-30-14
ELECTRICAL
STATE OF CALIFORNIA

THE STATE OF CALIFORNIA OR ITS OFFICERS OR AGENTS SHALL NOT BE RESPONSIBLE FOR THE ACCURACY OR COMPLETENESS OF SCANNED COPIES OF THIS PLAN SHEET.

TO ACCOMPANY PLANS DATED 1-21-14

2010 REVISED STANDARD PLAN RSP ES-8B

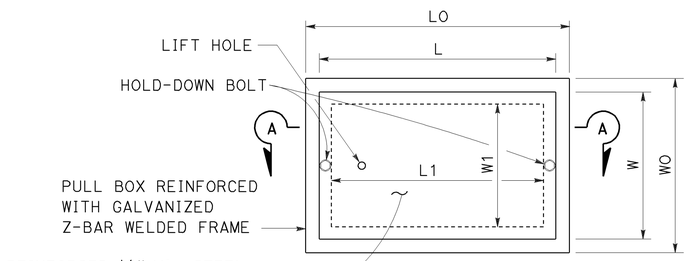

TOP VIEW

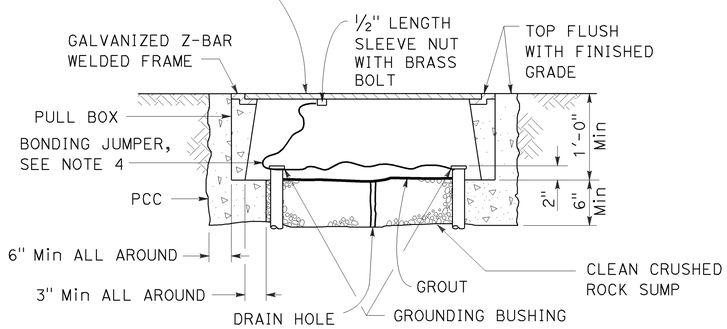

SECTION A-A

No. 3½(T), No. 5(T) AND No. 6(T) TRAFFIC PULL BOX

NOTES:

1. Traffic pull box shall be provided with steel cover and special concrete footing. Steel cover shall have embossed non-skid pattern.
2. Steel reinforcing shall be as regularly used in the standard products of the respective manufacturer.
3. Pull box covers shall be marked as follows: "SERVICE" Service circuits between service point and service disconnect; "SPRINKLER-CONTROL" Sprinkler control circuits, 50 V or less; "CALTRANS" On all pull boxes, except pull boxes marked "SPRINKLER-CONTROL"; and "TELEPHONE" Telephone service.
   - A) No. 3½(T) pull box.
     - 1) "SIGNAL" - Traffic signal circuits with or without lighting or sign lighting circuits.
     - 2) "LIGHTING" - Lighting or sign lighting circuits where voltage is under 600 V.
   - B) No. 5(T) or 6(T) pull box.
     - 1) "TRAFFIC SIGNAL" - Traffic signal circuits with or without lighting or sign lighting circuits.
     - 2) "LIGHTING" - Lighting or sign lighting circuits where voltage is under 600 V.
     - 3) "LIGHTING-HIGH VOLTAGE" - Lighting or sign lighting circuits where voltage is above 600 V.
     - 4) "IRRIGATION" - Circuits to irrigation controller 120 V or more.
     - 5) "RAMP METER" - Ramp meter circuits.
     - 6) "COUNT STATION" - Count or speed monitor circuits.
     - 7) "COMMUNICATION" - Communication circuits.
     - 8) "TOS COMMUNICATIONS" - TOS communications line.
     - 9) "TOS POWER" - TOS power.
     - 10) "TDC POWER" - Telephone demarcation cabinet power.
     - 11) "CCTV" - Closed circuit television circuits.
     - 12) "TMS" - Traffic monitoring station circuits.
     - 13) "CMS" - Changeable message sign circuits.
     - 14) "HAR" - Highway advisory radio circuits.
     - 15) "BOOSTER PUMP" - Booster pump circuit.
4. Bonding jumper for metal covers shall be 3' long, minimum.
5. The nominal dimensions of the opening in which the cover sets shall be the same as the cover dimensions except the length and width dimensions shall be ⅛" greater.
6. Covers and boxes shall be interchangeable with California standard male and female gages. When interchanged with a standard male or female gage, the top surfaces shall be flush within ⅛".

DIMENSION TABLE

PULL BOX	PULL BOX						COVER				
	MINIMUM * THICKNESS	MINIMUM DEPTH BOX AND EXTENSION	WO	LO	L1	W1	L **	W **	R	EDGE THICKNESS	EDGE TAPER
No. 3½(T)	1½"	1'-0"	1'-5"± 1"	1'-8⅞"±	1'-2½"±	10⅝"± 1"	1'-8"±	1'-1¾"±	0"	½"	NONE
No. 5(T)	1¾"	1'-0"	1'-11½"± 1"	2'-5½"±	1'-7"±	1'-1"± 1"	2'-3"±	1'-4"±	0"	½"	NONE
No. 6(T)	2"	1'-0"	2'-6"± 1"	2'-11½"±	1'-11½"±	1'-5"± 1"	2'-9"±	1'-8"±	0"	½"	NONE

* EXCLUDING CONDUIT WEB ** TOP DIMENSION

STATE OF CALIFORNIA
DEPARTMENT OF TRANSPORTATION

ELECTRICAL SYSTEMS (TRAFFIC PULL BOX)

NO SCALE

RSP ES-8B DATED JULY 19, 2013 SUPERSEDES RSP ES-8B DATED JANUARY 20, 2012 THAT SUPPLEMENTS THE STANDARD PLANS BOOK DATED 2010.

REVISED STANDARD PLAN RSP ES-8B

7-15-13

Dist	COUNTY	ROUTE	POST MILES TOTAL PROJECT	SHEET No.	TOTAL SHEETS
06	Ker	5	6.0/9.0	39	43

REGISTERED CIVIL ENGINEER

July 19, 2013
PLANS APPROVAL DATE

REGISTERED PROFESSIONAL ENGINEER
Stanley P. Johnson
No. C57793
Exp. 3-31-14
CIVIL
STATE OF CALIFORNIA

THE STATE OF CALIFORNIA OR ITS OFFICERS OR AGENTS SHALL NOT BE RESPONSIBLE FOR THE ACCURACY OR COMPLETENESS OF SCANNED COPIES OF THIS PLAN SHEET.

TO ACCOMPANY PLANS DATED 1-21-14

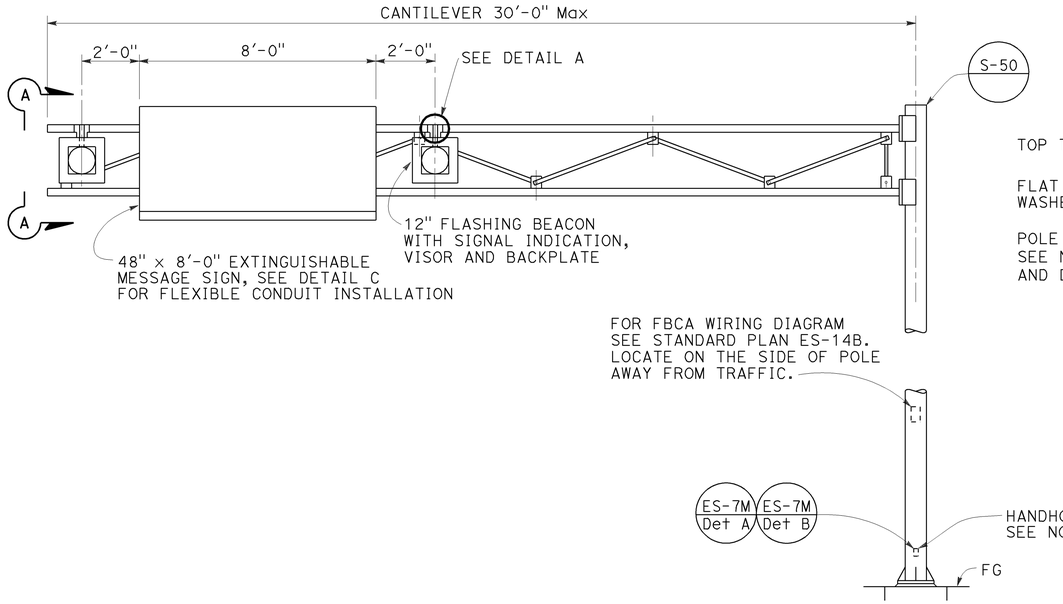

EMS WITH FLASHING BEACONS

ELEVATION A

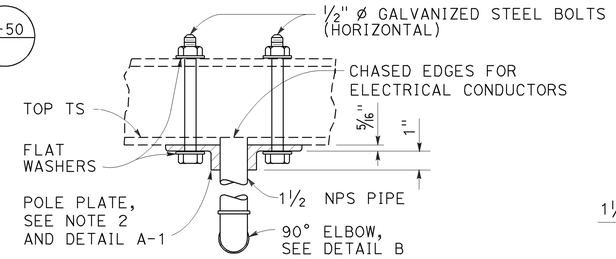

TOP VIEW

SECTION B-B

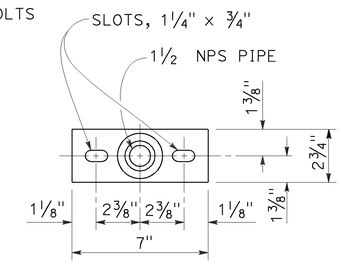

DETAIL A-1

POLE PLATE

DETAIL A

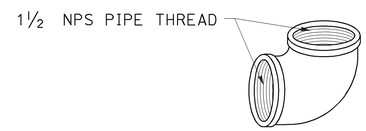

90° ELBOW

DETAIL B

NOTES:

1. Pole plate shall be bronze or galvanized ductile iron.
2. For structure information, see Standard Plan S-50.
3. Wind loading (3-second gust): 100 mph.
4. Handhole shall be located on the downstream side of traffic.

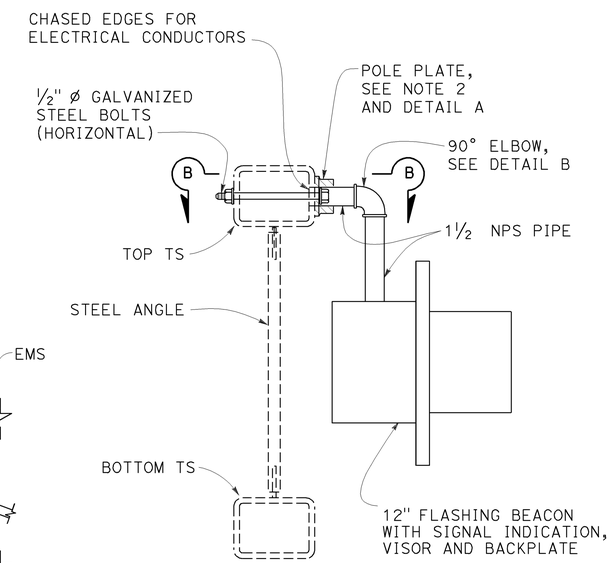

SECTION A-A

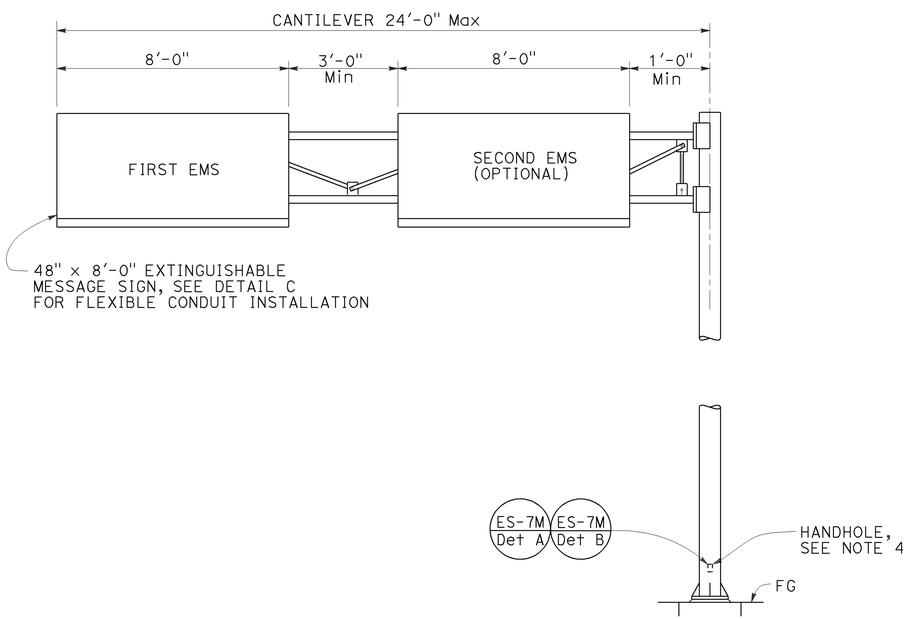

EMS WITHOUT FLASHING BEACONS

ELEVATION B

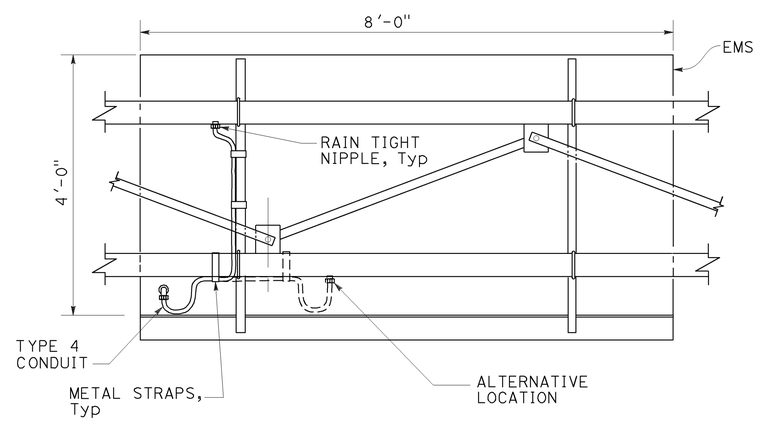

FLEXIBLE CONDUIT INSTALLATION

DETAIL C

Back view of sign

STATE OF CALIFORNIA
DEPARTMENT OF TRANSPORTATION

ELECTRICAL SYSTEMS (EXTINGUISHABLE MESSAGE SIGN ON A FULL CANTILEVER)

NO SCALE

RSP ES-14C DATED JULY 19, 2013 SUPERSEDES STANDARD PLAN ES-14C DATED MAY 20, 2011 - PAGE 495 OF THE STANDARD PLANS BOOK DATED 2010.

REVISED STANDARD PLAN RSP ES-14C

2010 REVISED STANDARD PLAN RSP ES-14C

6-18-13

Dist	COUNTY	ROUTE	POST MILES TOTAL PROJECT	SHEET No.	TOTAL SHEETS
06	Ker	5	6.0/9.0	40	43

REGISTERED CIVIL ENGINEER

November 15, 2013
PLANS APPROVAL DATE

REGISTERED PROFESSIONAL ENGINEER
Stanley P. Johnson
No. C57793
Exp. 3-31-14
CIVIL
STATE OF CALIFORNIA

THE STATE OF CALIFORNIA OR ITS OFFICERS OR AGENTS SHALL NOT BE RESPONSIBLE FOR THE ACCURACY OR COMPLETENESS OF SCANNED COPIES OF THIS PLAN SHEET.

TO ACCOMPANY PLANS DATED 1-21-14

2010 REVISED STANDARD PLAN RSP ES-16B

POLE TYPE	POLE DATA				BASE PLATE DATA				CIDH	
	HEIGHT "h"	Min OD		THICKNESS	"C"	THICKNESS	ANCHOR BOLT SIZE	BC = BOLT CIRCLE	Dia	"d"
		BASE	TOP							
CCTV 25	25′	7⅜"	3¾"	0.1793"	1′-1"	1"	1½" ø x 36"	11½"	2′-6"	7′-0"
CCTV 30	30′	8"			1′-1½"			1′-0"		7′-6"
CCTV 35	35′	8⅝"			1′-2"			1′-1"		8′-0"
CCTV 40	40′	9⅜"			1′-3"			1′-1½"		8′-6"
CCTV 45	45′	10"						1′-2"		

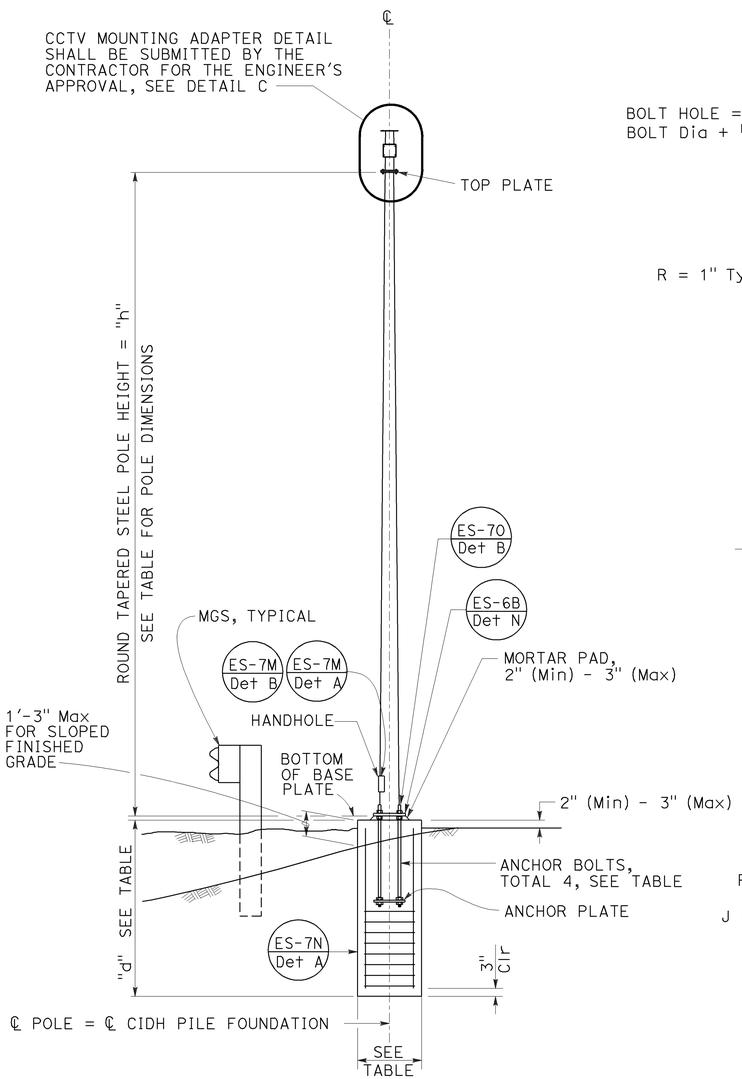

ELEVATION A

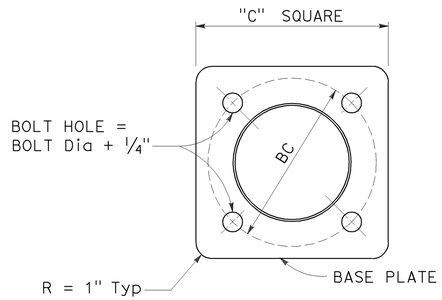

BASE PLATE

DETAIL A

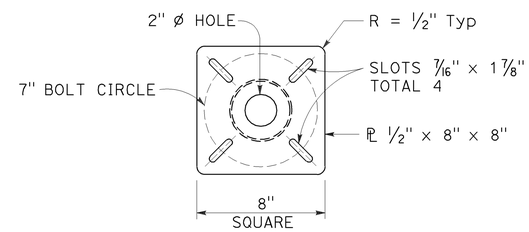

TOP PLATE

DETAIL B

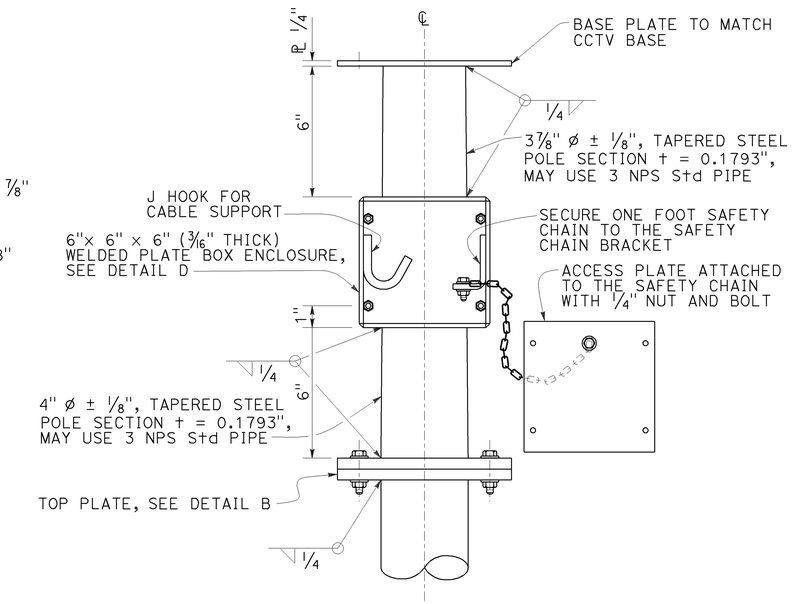

CLOSED CIRCUIT TELEVISION MOUNTING ADAPTER

DETAIL C

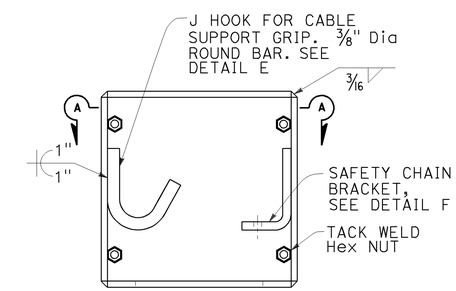

BOX ENCLOSURE

DETAIL D

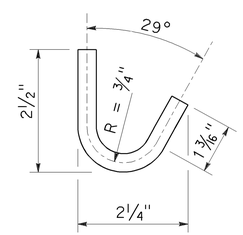

J HOOK

DETAIL E

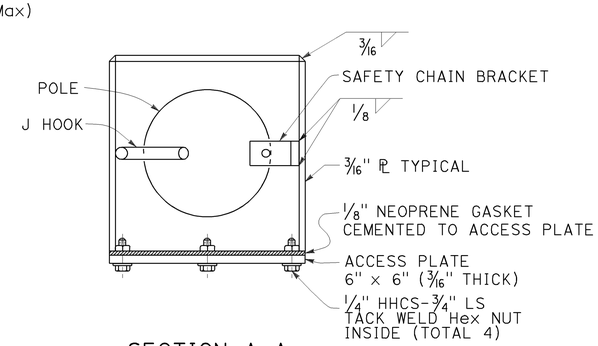

SECTION A-A

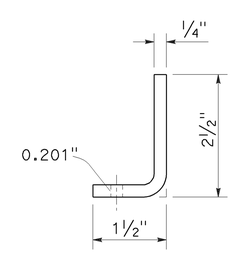

SAFETY CHAIN BRACKET

DETAIL F

NOTES:

1. The Contractor shall verify controlling field dimensions before ordering or fabricating any material.
2. During pole installation, the post shall be raked as necessary with the use of leveling nuts to provide a plumb pole axis.
3. Wind Loadings (3-second gust): 100 mph
4. Unit Stresses (Structural Steel):
   a. fy = 55,000 psi (tapered steel tube and anchor bolts)
   b. fy = 50,000 psi (unless otherwise noted)
5. Unit Stresses (Reinforced Concrete):
   a. f′c = 3,625 psi
   b. fy = 60,000 psi

STATE OF CALIFORNIA
DEPARTMENT OF TRANSPORTATION

ELECTRICAL SYSTEMS (CLOSED CIRCUIT TELEVISION, 25' TO 45' POLE)

NO SCALE

RSP ES-16B DATED NOVEMBER 15, 2013 SUPERSEDES STANDARD PLAN ES-16B DATED MAY 20, 2011 - PAGE 501 OF THE STANDARD PLANS BOOK DATED 2010.

REVISED STANDARD PLAN RSP ES-16B

10-4-13

DIST	COUNTY	ROUTE	POST MILES TOTAL PROJECT	SHEET No	TOTAL SHEETS
06	Ker	5	6.0/9.0	41	43

Mahfoud A Licha 1/9/14
REGISTERED CIVIL ENGINEER DATE

1-21-14
PLANS APPROVAL DATE

REGISTERED PROFESSIONAL ENGINEER MAHFOUD A. LICHA No. C62816 Exp. 6/30/14 CIVIL STATE OF CALIFORNIA

The State of California or its officers or agents shall not be responsible for the accuracy or completeness of electronic copies of this plan sheet.

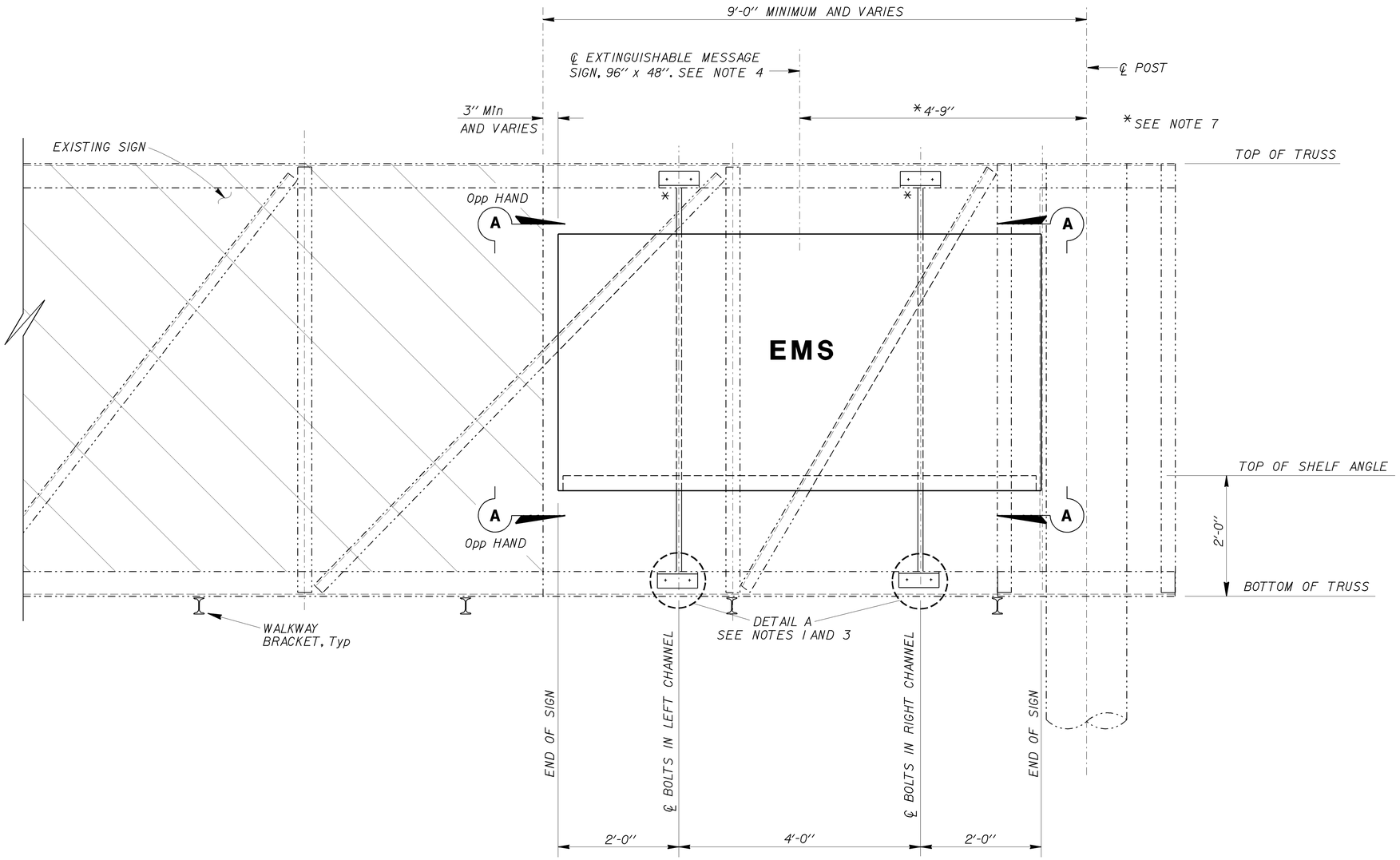

ELEVATION

NOTES:

1. For "DETAIL A" and "SECTION A-A", see sheet SES-3.
2. All holes in members shall be drilled. Thermal cutting and torch cutting not allowed.
3. Detail A, bolted connections shall not interfere with diagonal and vertical truss members.
4. For additional extinguishable message sign information, see "ELECTRICAL PLANS".
5. For additional overhead sign information, see "SIGN PLANS".
6. For details not shown, see "STANDARD PLANS 2010".
7. Adjust channels to avoid existing diagonals and vertical truss members, as approved by the Engineer. Channels shall be mounted 2 feet from the edge of sign.

NOTE:
THE CONTRACTOR SHALL VERIFY ALL CONTROLLING FIELD DIMENSIONS BEFORE ORDERING OR FABRICATING ANY MATERIAL.

STANDARD PLAN SHEET No.
DETAIL No.

NO SCALE

OVERHEAD SIGNS D, E, F, J, AND K

BRANCH CHIEF JEFF WOODY	DESIGN	BY MAHFOUD LICHA	CHECKED K. C. LIU	STATE OF CALIFORNIA DEPARTMENT OF TRANSPORTATION	DIVISION OF ENGINEERING SERVICES DESIGN AND TECHNICAL SERVICES SPECIAL DESIGNS BRANCH A	BRIDGE NO.	EXTINGUISHABLE MESSAGE SIGN MOUNTING DETAILS
	DETAILS	BY R. YEE	CHECKED MAHFOUD LICHA			POST MILE 0.0/10.0	SES-1
	QUANTITIES	BY	CHECKED				

(ENGLISH) SPECIAL DESIGNS BRANCH BORDER SHEET (REV. 7-1-09)

ORIGINAL SCALE IN INCHES FOR REDUCED PLANS 0 1 2 3

UNIT: 3619
PROJECT NUMBER & PHASE: 0613000117-1
CONTRACT NO.: 06-004500

DISREGARD PRINTS BEARING EARLIER REVISION DATES

REVISION DATES 5/15/13 1/9/14 6/11/13 7/24/13 SHEET OF

FILE => /06-004500/ses-1.dgn

USERNAME => s115241 DATE PLOTTED => 10-JAN-2014 TIME PLOTTED => 06:25

DIST	COUNTY	ROUTE	POST MILES TOTAL PROJECT	SHEET No	TOTAL SHEETS
06	Ker	5	6.0/9.0	42	43

Mahfoud A Licha 1/9/14
REGISTERED CIVIL ENGINEER DATE

1-21-14
PLANS APPROVAL DATE

REGISTERED PROFESSIONAL ENGINEER MAHFOUD A. LICHA No. C62816 Exp. 6/30/14 CIVIL STATE OF CALIFORNIA

The State of California or its officers or agents shall not be responsible for the accuracy or completeness of electronic copies of this plan sheet.

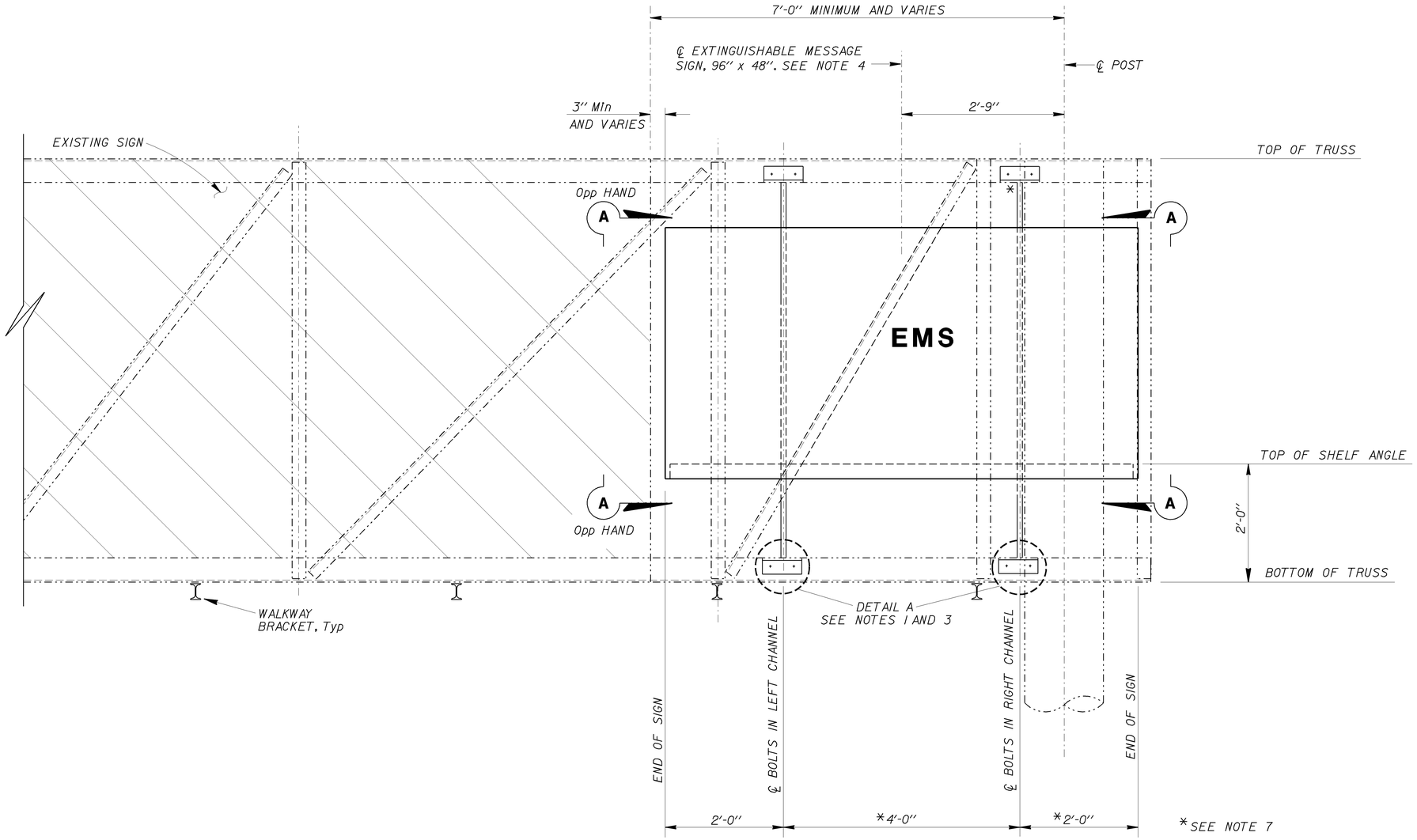

ELEVATION

NOTES:

1. For "DETAIL A" and "SECTION A-A", see sheet SES-3
2. All holes in members shall be drilled. Thermal cutting and torch cutting not allowed.
3. Detail A, bolted connections shall not interfere with diagonal and vertical truss members.
4. For additional extinguishable message sign information, see "ELECTRICAL PLANS".
5. For additional overhead sign information, see "SIGN PLANS".
6. For details not shown, see "STANDARD PLANS 2010".
7. Adjust right channel a maximum of 4" to avoid existing diagonal and vertical truss members as approved by the Engineer.

NOTE:
THE CONTRACTOR SHALL VERIFY ALL CONTROLLING FIELD DIMENSIONS BEFORE ORDERING OR FABRICATING ANY MATERIAL.

STANDARD PLAN SHEET No.
DETAIL No.

NO SCALE

OVERHEAD SIGNS G AND H

EXTINGUISHABLE MESSAGE SIGN MOUNTING DETAILS

SES-2

BRANCH CHIEF **JEFF WOODY**

	BY	CHECKED
DESIGN	MAHFOUD LICHA	K. C. LIU
DETAILS	R. YEE	MAHFOUD LICHA
QUANTITIES		

STATE OF CALIFORNIA DEPARTMENT OF TRANSPORTATION

DIVISION OF ENGINEERING SERVICES DESIGN AND TECHNICAL SERVICES SPECIAL DESIGNS BRANCH A

BRIDGE NO.
POST MILE 0.0/10.0

(ENGLISH) SPECIAL DESIGNS BRANCH BORDER SHEET (REV. 7-1-09)

ORIGINAL SCALE IN INCHES FOR REDUCED PLANS 0 1 2 3

UNIT: 3619
PROJECT NUMBER & PHASE: 0613000117-1
CONTRACT NO.: 06-004500

DISREGARD PRINTS BEARING EARLIER REVISION DATES

REVISION DATES 5/13/13 1/9/14 6/18/13 7/25/13

SHEET OF

FILE => /06-00450/ses-2.dgn

USERNAME => s115241 DATE PLOTTED => 10-JAN-2014 TIME PLOTTED => 06:26

DIST	COUNTY	ROUTE	POST MILES TOTAL PROJECT	SHEET No	TOTAL SHEETS
06	Ker	5	6.0/9.0	43	43

Mahfoud A Licha 1/9/14
REGISTERED CIVIL ENGINEER DATE

1-21-14
PLANS APPROVAL DATE

REGISTERED PROFESSIONAL ENGINEER MAHFOUD A. LICHA No. C62816 Exp. 6/30/14 CIVIL STATE OF CALIFORNIA

The State of California or its officers or agents shall not be responsible for the accuracy or completeness of electronic copies of this plan sheet.

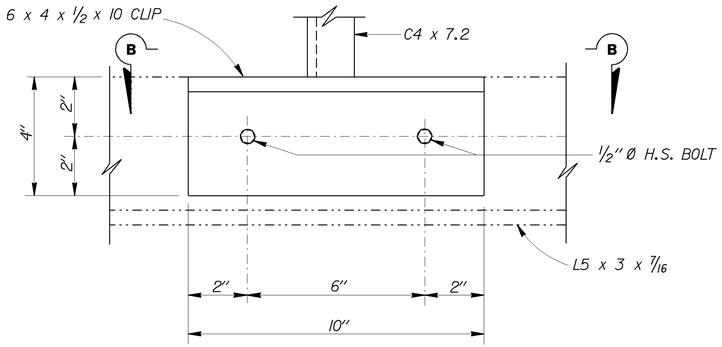

DETAIL A

RIGHT BOTTOM CHORD CONNECTION SHOWN. FOR TOP CHORD CONNECTION REVERSE TOP TO BOTTOM.

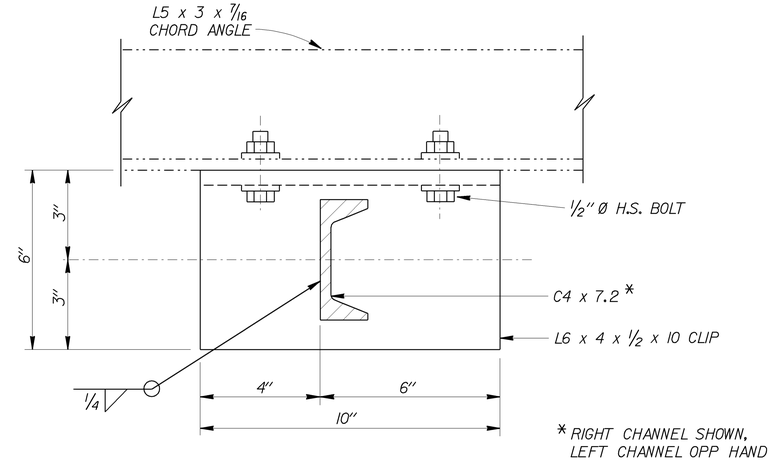

* RIGHT CHANNEL SHOWN, LEFT CHANNEL OPP HAND

SECTION B-B

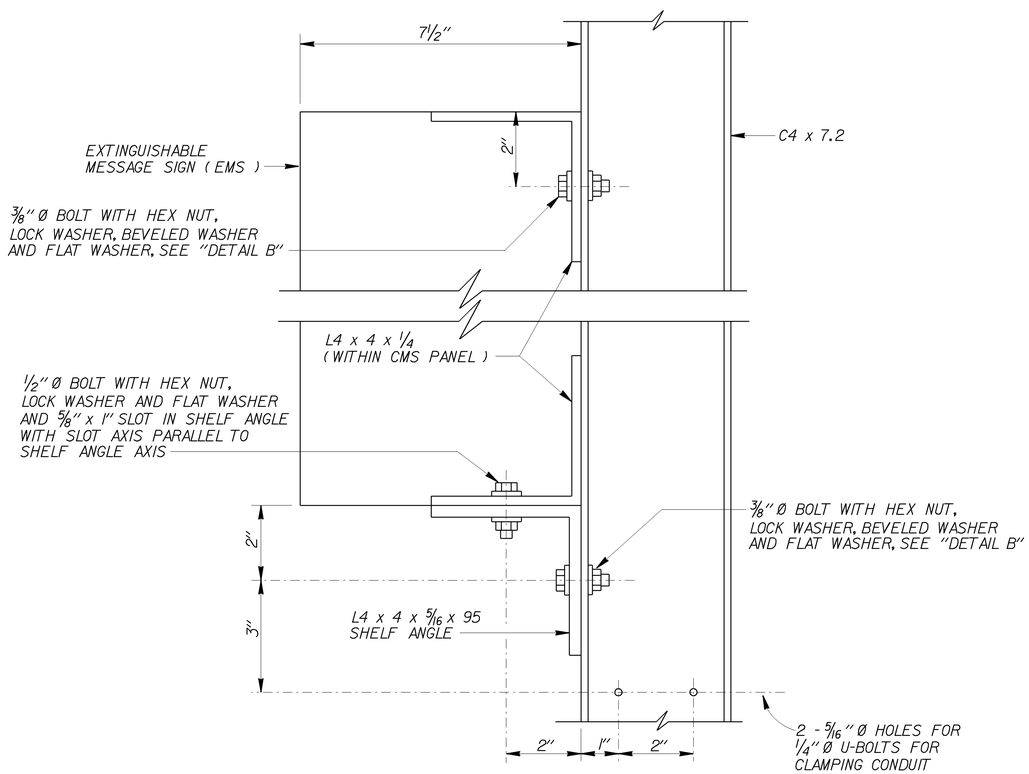

SECTION A-A

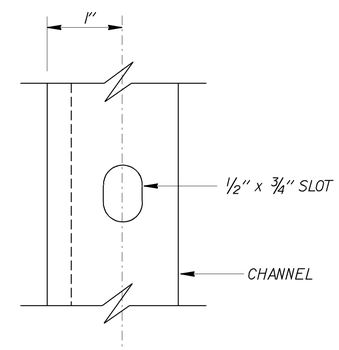

DETAIL B

RIGHT CHANNEL SHOWN, LEFT CHANNEL OPP HAND

NOTE:
THE CONTRACTOR SHALL VERIFY ALL CONTROLLING FIELD DIMENSIONS BEFORE ORDERING OR FABRICATING ANY MATERIAL.

STANDARD PLAN SHEET No.
DETAIL No.

NO SCALE

BRANCH CHIEF	JEFF WOODY	DESIGN	BY MAHFOUD LICHA	CHECKED K. C. LIU
		DETAILS	BY R. YEE	CHECKED MAHFOUD LICHA
		QUANTITIES	BY	CHECKED

STATE OF CALIFORNIA
DEPARTMENT OF TRANSPORTATION

DIVISION OF ENGINEERING SERVICES
DESIGN AND TECHNICAL SERVICES
SPECIAL DESIGNS BRANCH A

BRIDGE NO.
POST MILE 0.0/10.0

EXTINGUISHABLE MESSAGE SIGN MOUNTING DETAILS

SES-3

(ENGLISH) SPECIAL DESIGNS BRANCH BORDER SHEET (REV. 7-1-09)

ORIGINAL SCALE IN INCHES FOR REDUCED PLANS 0 1 2 3

UNIT: 3619
PROJECT NUMBER & PHASE: 0613000117-1
CONTRACT NO.: 06-0Q4500

DISREGARD PRINTS BEARING EARLIER REVISION DATES

REVISION DATES 5/13/13 6/13/13 7/24/13 1/9/14 SHEET OF

FILE => /06-0Q450/ses-3.dgn

USERNAME => s115241 DATE PLOTTED => 10-JAN-2014 TIME PLOTTED => 06:26