Dist	COUNTY	ROUTE	POST MILES TOTAL PROJECT	SHEET No.	TOTAL SHEETS
04	Ala	13	8.3	1	108

1 ACSTP-P013-(033)E

STATE OF CALIFORNIA
DEPARTMENT OF TRANSPORTATION

PROJECT PLANS FOR CONSTRUCTION ON
STATE HIGHWAY
IN ALAMEDA COUNTY
IN OAKLAND
NEAR MORAGA AVENUE NORTHBOUND ON-RAMP

TO BE SUPPLEMENTED BY STANDARD PLANS DATED 2010

INDEX OF PLANS

SHEET No.	DESCRIPTION
1	TITLE SHEET
2	TYPICAL CROSS SECTIONS
3	LAYOUT
4 - 11, 11A, 11B	CONSTRUCTION DETAILS
12	TEMPORARY WATER POLLUTION CONTROL QUANTITIES
13 - 17	DRAINAGE PLAN, PROFILES, DETAILS AND QUANTITIES
18 - 21	CONSTRUCTION AREA SIGNS
22 - 24	STAGE CONSTRUCTION AND TRAFFIC HANDLING PLAN
25	PAVEMENT DELINEATION PLAN
26 - 27	SUMMARY OF QUANTITIES
28 - 32	IRRIGATION SPRINKLER SCHEDULE AND PLAN, IRRIGATION PLAN AND QUANTITIES
33 - 35	PLANT LIST, PLAN AND QUANTITIES
36 - 37	EROSION CONTROL LEGEND AND PLAN
38 - 41	ELECTRICAL PLAN
42 - 68, 68A	REVISED STANDARD PLANS
	STRUCTURE PLANS
69 - 84	SOLDIER PILE WALL WITH GROUND ANCHORS AND LOG OF TEST BORINGS
85 - 97	GROUND ANCHORED DIAPHRAGM WALL AND LOG OF TEST BORINGS
98 - 108	SOLDIER PILE WALL AND LOG OF TEST BORINGS

LOCATION MAP

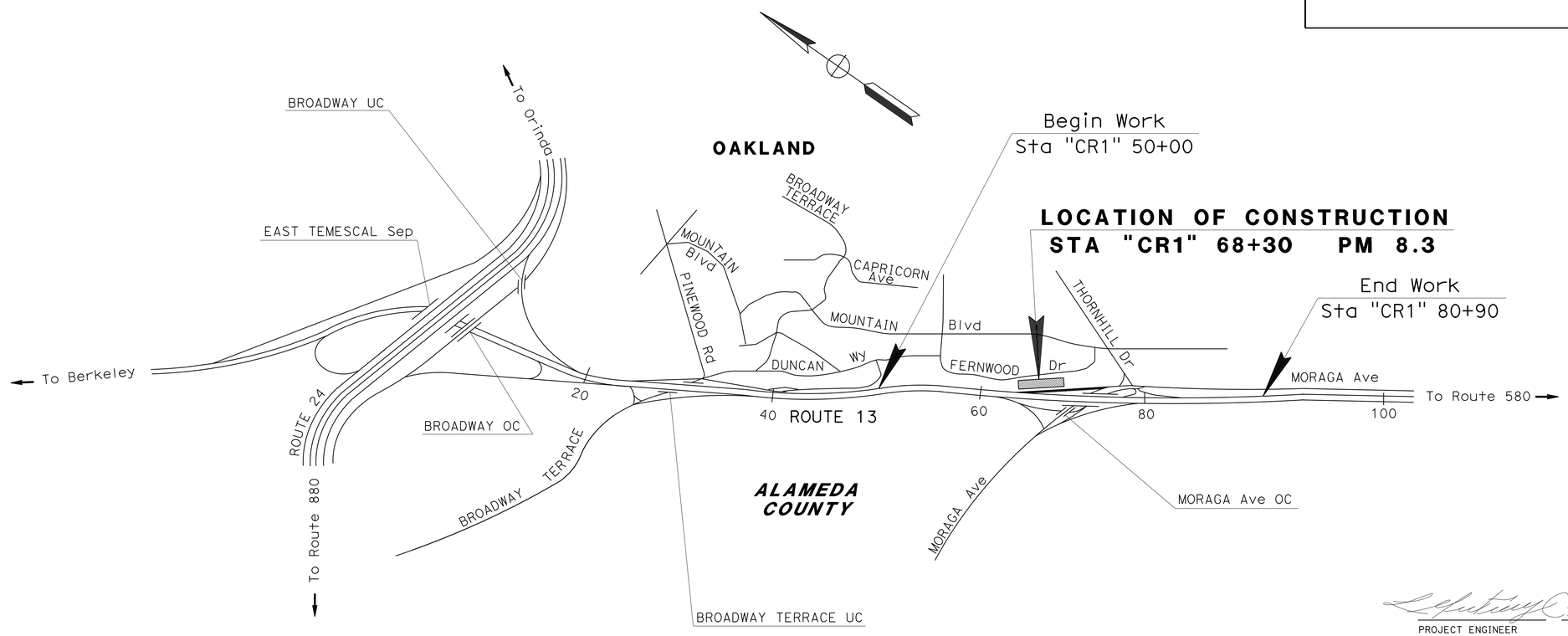

1 REPLACED PER ADDENDUM No. 1 DATED JANUARY 19, 2016

THE CONTRACTOR SHALL POSSESS THE CLASS (OR CLASSES) OF LICENSE AS SPECIFIED IN THE "NOTICE TO BIDDERS."

NO SCALE

3/26/14
PROJECT ENGINEER DATE
REGISTERED CIVIL ENGINEER

REGISTERED PROFESSIONAL ENGINEER
Luis A. Gutierrez
No. 49131
Exp. 9-30-16
CIVIL
STATE OF CALIFORNIA

October 19, 2015
PLANS APPROVAL DATE

THE STATE OF CALIFORNIA OR ITS OFFICERS OR AGENTS SHALL NOT BE RESPONSIBLE FOR THE ACCURACY OR COMPLETENESS OF SCANNED COPIES OF THIS PLAN SHEET.

PROJECT MANAGER JULIE CAMPERO
DESIGN MANAGER SOTERO ANGELES

CONTRACT No.	04-1SS024
PROJECT ID	0400020868

LAST REVISION 10-09-15
DATE PLOTTED => 15-JAN-2016
TIME PLOTTED => 10:42

Dist	COUNTY	ROUTE	POST MILES TOTAL PROJECT	SHEET No.	TOTAL SHEETS
04	Ala	13	8.3	11A	108

6/9/14
REGISTERED CIVIL ENGINEER DATE

10-19-15
PLANS APPROVAL DATE

REGISTERED PROFESSIONAL ENGINEER Chuan-Ping Wang No. 70080 Exp. 9-30-16 CIVIL STATE OF CALIFORNIA

THE STATE OF CALIFORNIA OR ITS OFFICERS OR AGENTS SHALL NOT BE RESPONSIBLE FOR THE ACCURACY OR COMPLETENESS OF SCANNED COPIES OF THIS PLAN SHEET.

NOTE:

FOR ACCURATE RIGHT OF WAY DATA, CONTACT RIGHT OF WAY ENGINEERING AT THE DISTRICT OFFICE.

LEGEND: (FOR THIS SHEET ONLY)

-TFESA-×——×- TEMPORARY FENCE ENVIRONMENTALLY SENSITIVE AREA (TFESA)

⊗ TREE STUMP APPROXIMATE LOCATION SEE SHEET C-10 FOR TREE SIZES AND SPECIES

1 **ADDED PER ADDENDUM No. 1 DATED JANUARY 19, 2016**

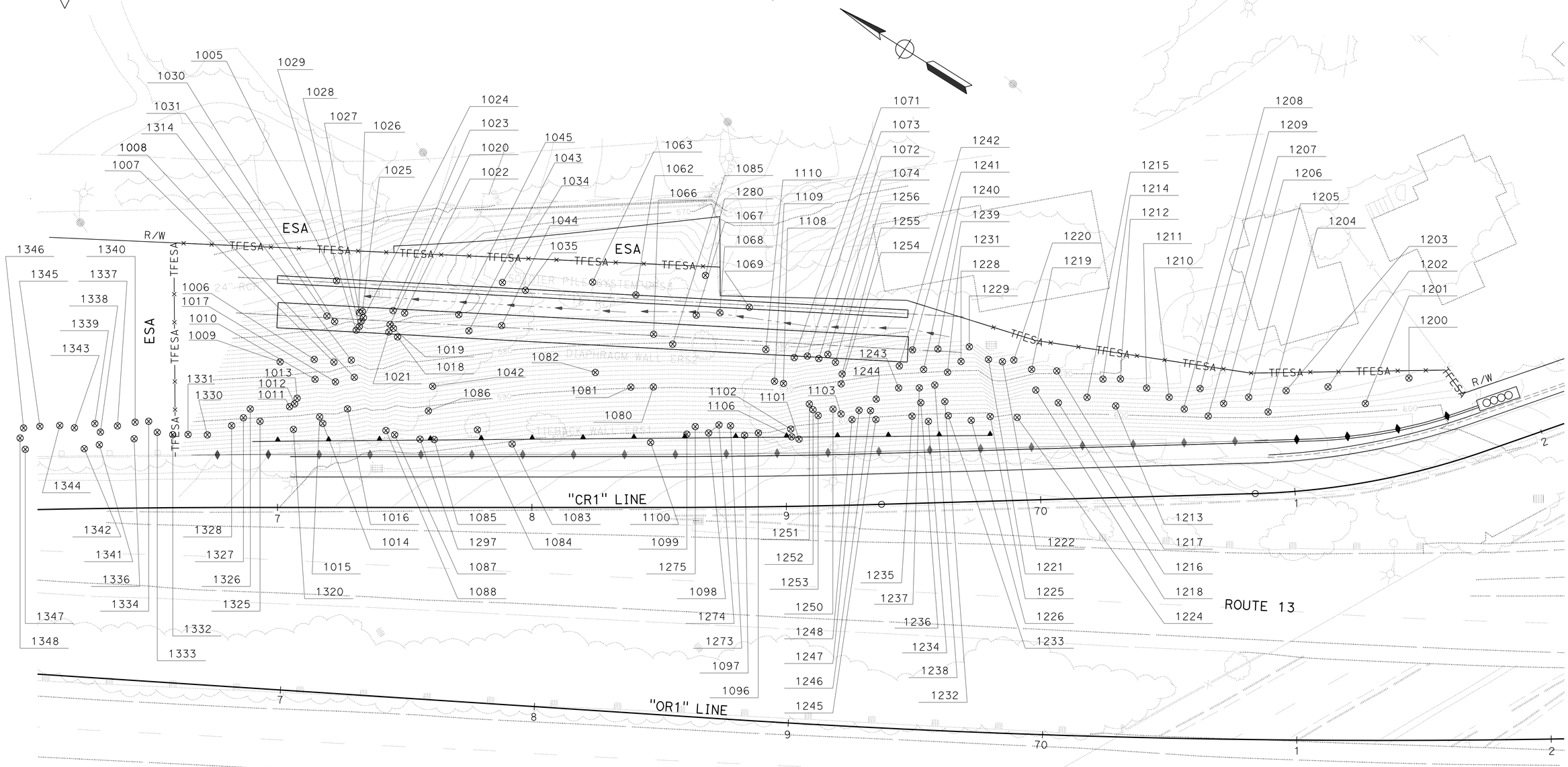

CONSTRUCTION DETAILS
TREE STUMPS LOCATION

SCALE: 1" = 50'

C-9

STATE OF CALIFORNIA - DEPARTMENT OF TRANSPORTATION
Caltrans®
DESIGN

FUNCTIONAL SUPERVISOR: SOTERO ANGELES
CALCULATED-DESIGNED BY: LUIS GUTIERREZ
CHECKED BY: AARON WANG
REVISED BY: LG
DATE REVISED: 6/9/14

LAST REVISION 09-22-15
DATE PLOTTED => 15-JAN-2016
TIME PLOTTED => 10:42

Dist	COUNTY	ROUTE	POST MILES TOTAL PROJECT	SHEET No.	TOTAL SHEETS
04	Ala	13	8.3	11B	108

6/9/14
REGISTERED CIVIL ENGINEER DATE

10-19-15
PLANS APPROVAL DATE

REGISTERED PROFESSIONAL ENGINEER Chuan-Ping Wang No. 70080 Exp. 9-30-16 CIVIL STATE OF CALIFORNIA

THE STATE OF CALIFORNIA OR ITS OFFICERS OR AGENTS SHALL NOT BE RESPONSIBLE FOR THE ACCURACY OR COMPLETENESS OF SCANNED COPIES OF THIS PLAN SHEET.

1 **ADDED PER ADDENDUM No. 1 DATED JANUARY 19, 2016**

TREE No.	SPECIES	DBH
1005	PINE	28
1006	ACACIA	7
1007	PINE	10
1008	PINE	17
1009	FLOSS SILK TREE	7
1010	ACACIA	8
1011	FLOSS SILK TREE	7
1012	FLOSS SILK TREE	7
1013	FLOSS SILK TREE	7
1014	FLOSS SILK TREE	7
1015	FLOSS SILK TREE	12
1016	FLOSS SILK TREE	7
1017	PINE	23
1019	ACACIA	8
1020	ACACIA	9
1021	ACACIA	7
1022	ACACIA	9
1023	ACACIA	8
1024	ACACIA	7
1025	ACACIA	7
1026	ACACIA	7
1027	ACACIA	7
1028	ACACIA	7
1029	ACACIA	7
1030	REDWOOD	13
1031	PRUNUS	12
1034	ACACIA	7
1035	REDWOOD	10
1042	ACACIA	9
1043	PINE	21
1044	PINE	22
1045	REDWOOD	7
1062	REDWOOD	13
1063	REDWOOD	14
1066	REDWOOD	11
1067	CEDAR	7
1068	CEDAR	9
1069	CEDAR	11
1071	PINE	12
1072	ACACIA	7
1073	ACACIA	7
1074	ACACIA	7
1081	ACACIA	7
1083	LIVE OAK	7
1083	LIVE OAK	7
1084	LIVE OAK	8
1084	LIVE OAK	7
1085	LIVE OAK	8
1085	LIVE OAK	7
1086	LIVE OAK	7

DIAMETER AT BREAST HEIGHT (DBH)

TREE No.	SPECIES	DBH
1087	LIVE OAK	7
1088	ACACIA	10
1088	LIVE OAK	7
1096	LIVE OAK	7
1097	LIVE OAK	7
1098	LIVE OAK	7
1099	LIVE OAK	7
1100	PINE	12
1101	LIVE OAK	7
1102	LIVE OAK	7
1103	PINE	18
1106	LIVE OAK	7
1108	ACACIA	7
1109	ACACIA	9
1110	ACACIA	16
1200	ACACIA	21
1201	PINE	23
1202	PINE	20
1203	PINE	20
1204	PINE	21
1205	PINE	10
1206	PINE	15
1207	PINE	19
1208	PINE	17
1209	PINE	21
1210	PINE	11
1211	PINE	19
1212	PINE	13
1213	PINE	21
1214	PINE	22
1215	PINE	19
1216	PINE	22
1217	PINE	7
1218	PINE	12
1219	PINE	16
1220	PINE	17
1221	PINE	17
1222	PINE	19
1224	PINE	16
1225	PINE	11
1226	PINE	11
1228	PINE	22
1229	PINE	17
1231	PINE	12
1232	PINE	15
1233	PINE	15
1234	PINE	11
1235	PINE	11
1236	PINE	9
1237	PINE	12

TREE No.	SPECIES	DBH
1238	PINE	8
1239	PINE	22
1240	PINE	14
1241	PINE	14
1242	PINE	19
1243	PINE	12
1244	PINE	9
1245	PINE	13
1246	PINE	13
1247	ACACIA	7
1248	PINE	9
1250	PINE	14
1251	PINE	12
1252	PINE	9
1253	ACACIA	9
1254	ACACIA	19
1255	ACACIA	14
1256	PINE	19
1273	LIVE OAK	7
1274	LIVE OAK	7
1275	LIVE OAK	18
1280	CEDAR	11
1297	LIVE OAK	7
1314	PINE	7
1320	FLOSS SILK TREE	7
1325	PINE	16
1326	PINE	9
1327	PINE	19
1328	PINE	16
1330	PINE	18
1331	PINE	10
1332	PINE	16
1333	PINE	17
1334	ACACIA	7
1336	PINE	17
1337	PINE	9
1338	ACACIA	8
1339	PINE	14
1340	PINE	19
1341	PINE	19
1342	PINE	14
1343	ACACIA	7
1344	ACACIA	7
1345	ACACIA	10
1346	PINE	17
1347	PINE	20
1348	PINE	12

CONSTRUCTION DETAILS
TREE INFORMATION

C-10

STATE OF CALIFORNIA - DEPARTMENT OF TRANSPORTATION
Caltrans® DESIGN

FUNCTIONAL SUPERVISOR: SOTERO ANGELES
CALCULATED-DESIGNED BY: LUIS GUTIERREZ
CHECKED BY: AARON WANG
REVISED BY: LG
DATE REVISED: 6/9/14

LAST REVISION 09-17-15
DATE PLOTTED => 15-JAN-2016
TIME PLOTTED => 10:42

Dist	COUNTY	ROUTE	POST MILES TOTAL PROJECT	SHEET No.	TOTAL SHEETS
04	Ala	13	8.3	13	108

Craig M Tomimatsu 5/6/14
REGISTERED CIVIL ENGINEER DATE

10-19-15
PLANS APPROVAL DATE

REGISTERED PROFESSIONAL ENGINEER Craig M. Tomimatsu No. 43072 Exp. 3-31-16 CIVIL STATE OF CALIFORNIA

THE STATE OF CALIFORNIA OR ITS OFFICERS OR AGENTS SHALL NOT BE RESPONSIBLE FOR THE ACCURACY OR COMPLETENESS OF SCANNED COPIES OF THIS PLAN SHEET.

NOTE:

FOR ACCURATE RIGHT OF WAY DATA, CONTACT RIGHT OF WAY ENGINEERING AT THE DISTRICT OFFICE.

1 REPLACED PER ADDENDUM No. 1 DATED JANUARY 19, 2016

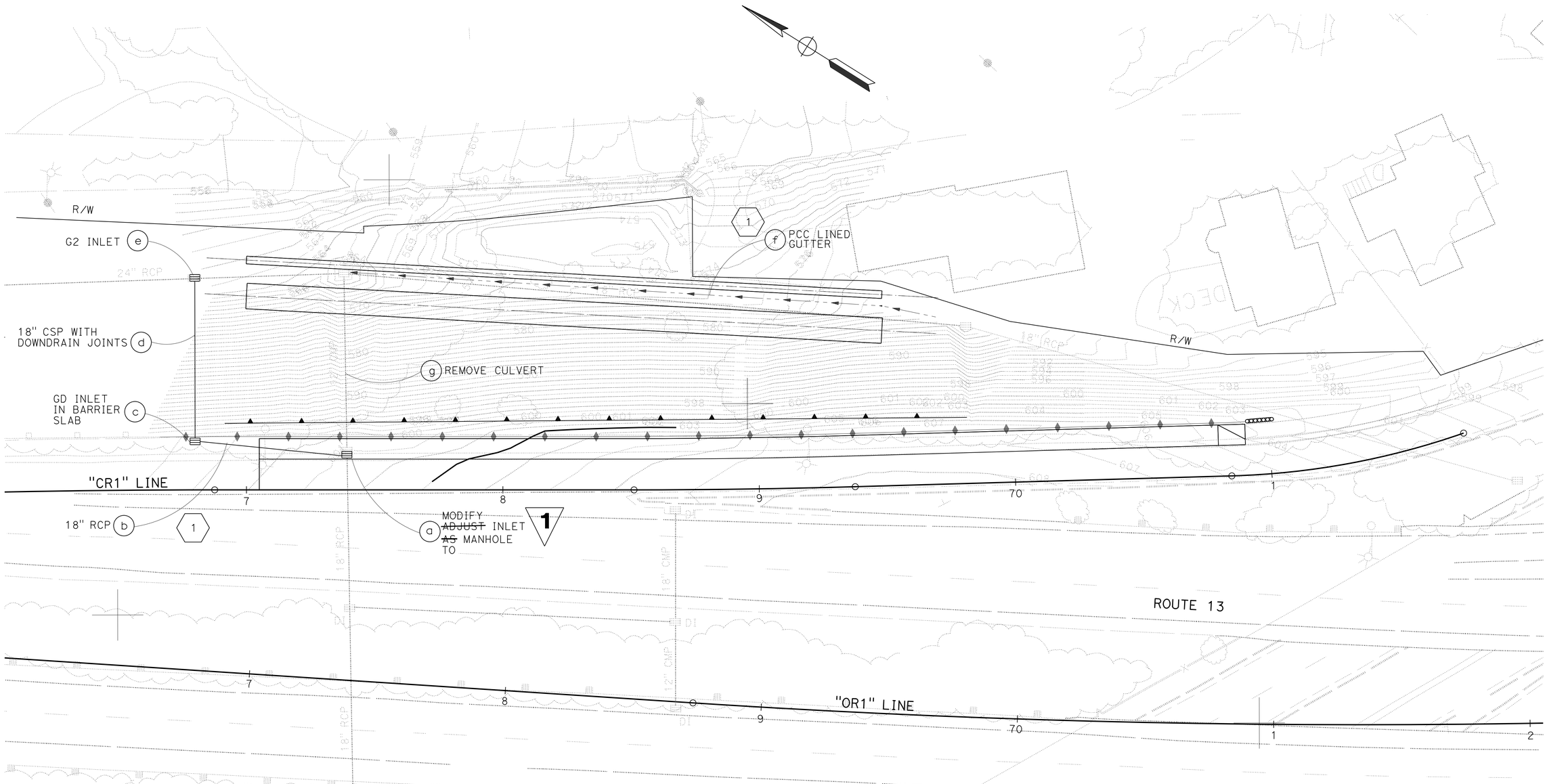

DRAINAGE PLAN
SCALE: 1" = 20'

APPROVED FOR DRAINAGE WORK ONLY

D-1

REVISED BY	DATE REVISED
CT	5/5/14

CRAIG TOMIMATSU
LUIS GUTIERREZ
CALCULATED-DESIGNED BY
CHECKED BY
FUNCTIONAL SUPERVISOR
JOSEPH PETERSON

STATE OF CALIFORNIA - DEPARTMENT OF TRANSPORTATION
Caltrans
HYDRAULICS

LAST REVISION 10-09-15
DATE PLOTTED => 15-JAN-2016
TIME PLOTTED => 10:42

Dist	COUNTY	ROUTE	POST MILES TOTAL PROJECT	SHEET No.	TOTAL SHEETS
04	Ala	13	8.3	16	108

Craig M Tomimatsu 5/6/14
REGISTERED CIVIL ENGINEER DATE

10-19-15
PLANS APPROVAL DATE

REGISTERED PROFESSIONAL ENGINEER Craig M. Tomimatsu No. 43072 Exp. 3-31-16 CIVIL STATE OF CALIFORNIA

THE STATE OF CALIFORNIA OR ITS OFFICERS OR AGENTS SHALL NOT BE RESPONSIBLE FOR THE ACCURACY OR COMPLETENESS OF SCANNED COPIES OF THIS PLAN SHEET.

NOTE:

FOR DETAILS NOT SHOWN, SEE Std PLAN D73-G2 INLET.

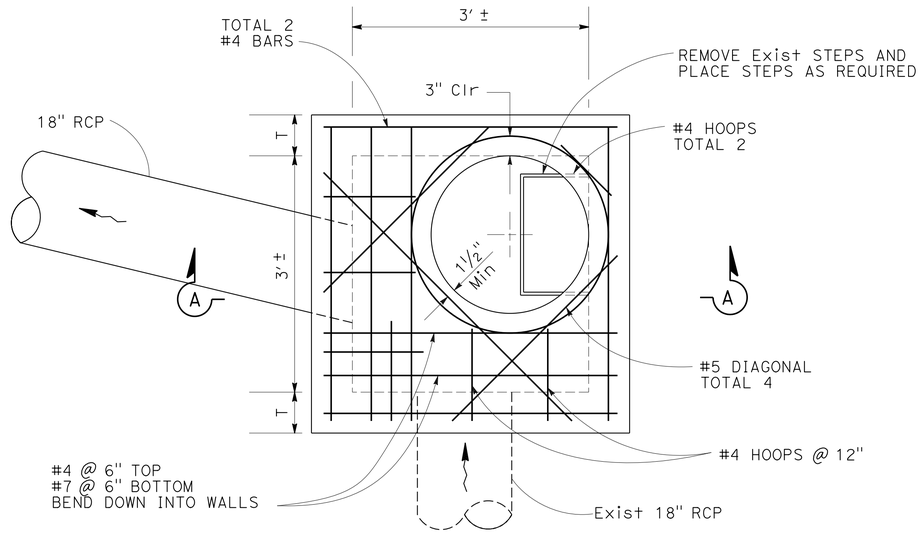

PLAN

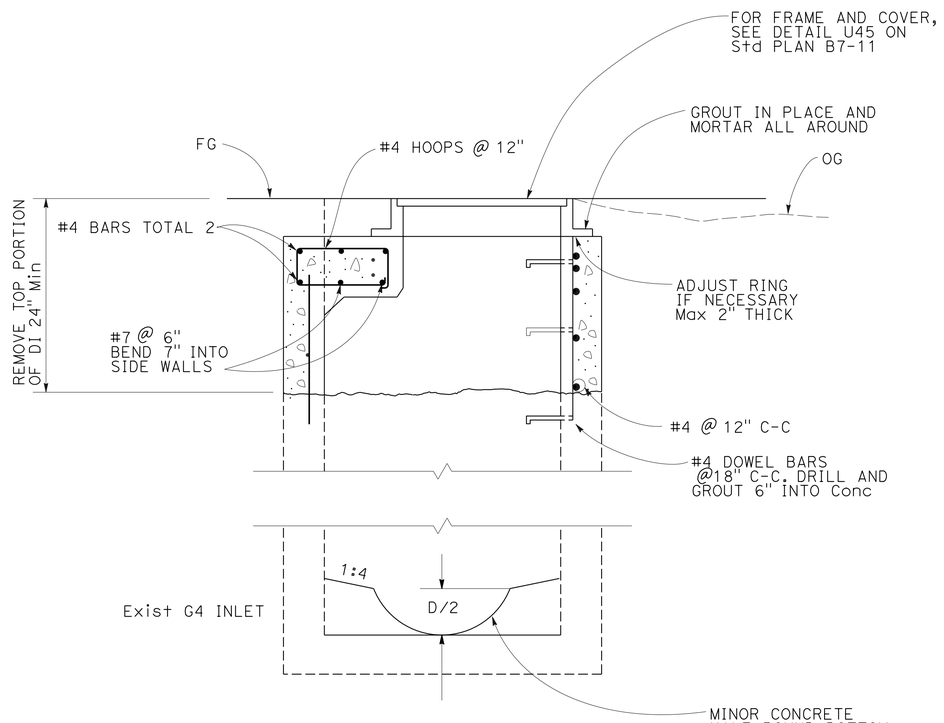

SECTION A-A

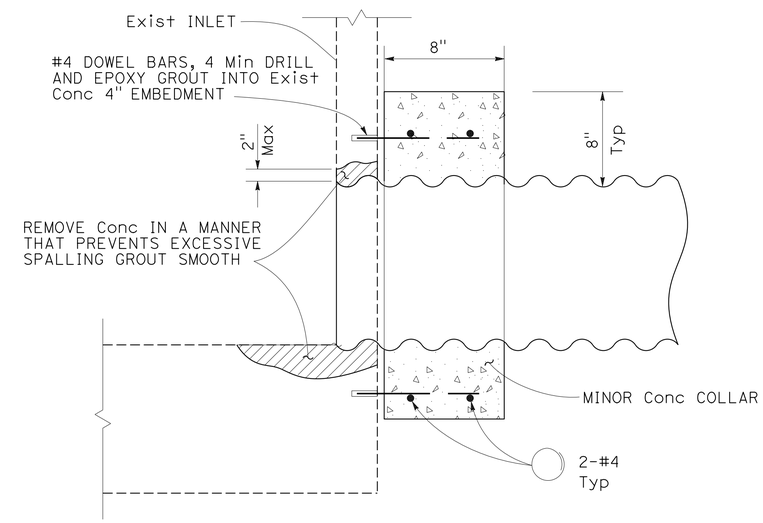

PIPE CONNECTION TO EXISTING INLET

1 ~~ADJUST INLET AS MANHOLE~~
MODIFY INLET AS MANHOLE

1 **REPLACED PER ADDENDUM No. 1 DATED JANUARY 19, 2016**

DRAINAGE DETAILS

NO SCALE

DD-2

STATE OF CALIFORNIA - DEPARTMENT OF TRANSPORTATION
Caltrans
HYDRAULICS

FUNCTIONAL SUPERVISOR: JOSEPH PETERSON
CALCULATED-DESIGNED BY: CRAIG TOMIMATSU
CHECKED BY: LUIS GUTIERREZ
REVISED BY: CT
DATE REVISED: 5/5/14

LAST REVISION 06-09-14
DATE PLOTTED => 15-JAN-2016
TIME PLOTTED => 10:42

Dist	COUNTY	ROUTE	POST MILES TOTAL PROJECT	SHEET No.	TOTAL SHEETS
04	Ala	13	8.3	17	108

REGISTERED CIVIL ENGINEER 5/6/14 DATE

10-19-15
PLANS APPROVAL DATE

REGISTERED PROFESSIONAL ENGINEER Craig M. Tomimatsu No. 43072 Exp. 3-31-16 CIVIL STATE OF CALIFORNIA

THE STATE OF CALIFORNIA OR ITS OFFICERS OR AGENTS SHALL NOT BE RESPONSIBLE FOR THE ACCURACY OR COMPLETENESS OF SCANNED COPIES OF THIS PLAN SHEET.

ABBREVIATIONS:

D DOWNDRAIN JOINT
P POSITIVE JOINT
W WATERTIGHT JOINT

MODIFY INLET TO MANHOLE 1

DRAINAGE QUANTITIES

DRAINAGE SHEET No.	DRAINAGE SYSTEM No. ⬡	DRAINAGE UNIT ○	REMOVE CULVERT LF	MINOR CONCRETE (MINOR STRUCTURE) CY	18" RCP LF	18" CORRUGATED STEEL PIPE (0.079" THICK) LF	HEIGHT OF INLET (N) LF	~~ADJUST INLET~~ EA	PIPE JOINT CLASSIFICATION	FRAMES AND GRATES (TYPE 24-12) [N] EA	MANHOLE FRAME AND COVER (TYPE U45) [N] EA	MISCELLANEOUS IRON AND STEEL LBS	MAXIMUM HEIGHT OF COVER [N] FT	CONCRETE (GUTTER LINING) CY	DESCRIPTION	STATION	DRAINAGE SYSTEM No. ⬡	DRAINAGE UNIT ○
															MODIFY INLET TO MANHOLE 1			
D-1	1	a					9.2	1			1	435			~~ADJUST INLET AS MANHOLE~~	14′± Lt "CR1" 67+39	1	a
		b			60				PW				7.5		18" RCP	20′ Lt "CR1" 66+80 TO 14′ Lt 67+39		b
		c		2.53			6.72			2		634			GD INLET IN BARRIER SLAB	20′ Lt "CR1" 66+80		c
		d				73			D				5.3		18" CSP	18.92′ Lt "CR1" 66+80 TO 82.69′ Lt 66+80		d
		e		2.22			6.55			1		326			G2 INLET	82.69′ Lt "CR1" 66+80		e
		f												24	PCC LINED GUTTER	61.4′ Lt "CR1" 69+80 TO 83.45′ Lt 67+38		f
		g	74												REMOVE 12" CSP	16.54′ Lt "CR1" 67+38		g
SHEET TOTAL			74	4.75	60	73		1		3	1	1395		24	SHEET TOTAL			

1 (N) NOT A SEPARATE PAY ITEM, FOR INFORMATION ONLY

1 **REPLACED PER ADDENDUM No. 1 DATED JANUARY 19, 2016**

DRAINAGE QUANTITIES DQ-1

STATE OF CALIFORNIA - DEPARTMENT OF TRANSPORTATION
Caltrans® HYDRAULICS

FUNCTIONAL SUPERVISOR: JOSEPH PETERSON
CALCULATED-DESIGNED BY: LUIS GUTIERREZ
CHECKED BY: CRAIG TOMIMATSU
REVISED BY: CT
DATE REVISED: 5/5/14

LAST REVISION 06-09-14 | DATE PLOTTED => 15-JAN-2016 | TIME PLOTTED => 10:42

Dist	COUNTY	ROUTE	POST MILES TOTAL PROJECT	SHEET No.	TOTAL SHEETS
04	Ala	13	8.3	26	108

REGISTERED CIVIL ENGINEER 3/26/14 DATE

10-19-15
PLANS APPROVAL DATE

REGISTERED PROFESSIONAL ENGINEER Luis A. Gutierrez No. 49131 Exp. 9-30-16 CIVIL STATE OF CALIFORNIA

THE STATE OF CALIFORNIA OR ITS OFFICERS OR AGENTS SHALL NOT BE RESPONSIBLE FOR THE ACCURACY OR COMPLETENESS OF SCANNED COPIES OF THIS PLAN SHEET.

1

ROADWAY QUANTITIES

SHEET No.	STATION	DIRECTION	TACK COAT	ROADWAY EXCAVATION	HOT MIX ASPHALT OPEN GRADED FRICTION COURSE	HOT MIX ASPHALT (TYPE A)	LCB RAPID SETTING	CLASS 4 AGGREGATE SUBBASE	COLD PLANE ASPHALT CONCRETE PAVEMENT	REMOVE CONCRETE (CURB AND GUTTER)	REMOVE CONCRETE PAVEMENT AND BASE (CTB)	REMOVE GUARDRAIL	MIDWEST GUARD RAIL SYSTEM (7' WOOD POST)	VEGETATION CONTROL MINOR CONCRETE	TYPE REACT CRASH CUSHION
			TON	CY	TON		CY		SQYD	CY		LF		SQYD	EA
L-1	"CR1" 66+66 TO 71+80	NB		500	65	240			155						1
	"CR1" 66+66 TO 70+30						115	240			121				
	"CR1" 69+09 TO 70+90									12					
	"CR1" 66+29 TO 67+16											90	40		
	"CR1" 66+29 TO 66+67													15	
	"CR1" 66+66 TO 70+80		0.62												
TOTAL			0.62	500	65	240	115	240	155	12	121	90	40	15	1

TEMPORARY QUANTITIES

SHEET No.	STATION	DIRECTION/ LOCATION	TEMPORARY RAILING (TYPE K)	TEMPORARY ALTERNATIVE CRASH CUSHION	CHANNELIZERS (SURFACE MOUNTED)	TEMPORARY ESA FENCE	TRAFFIC STRIPE (PAINT) 25A 4" YELLOW	TRAFFIC STRIPE (PAINT) 27B 4" WHITE	TEMPORARY PAVEMENT MARKER
			LF	EA			LF		EA
SC-1	"CR1" 65+50 TO 71+52	NB	612	1	10		602	602	26
SC-2	"CR1" 66+45 TO 68+53	NB	208	1					
L-1	20' Lt "CR1" 66+60 TO 61' Lt "CR1" 71+80					557			
TOTAL			820	2	10	557	1204		26

PAVEMENT DELINEATION QUANTITIES

SHEET No.	STATION	DIRECTION/ LOCATION	DETAIL No.	THERMOPLASTIC TRAFFIC STRIPE 4" WHITE (BROKEN 17'-7')	THERMOPLASTIC TRAFFIC STRIPE 4" WHITE	THERMOPLASTIC TRAFFIC STRIPE 4" YELLOW	THERMOPLASTIC TRAFFIC STRIPE 8" WHITE	PAVEMENT MARKER (RETROREFLECTIVE)	CLASS 1 DELINEATOR (TYPE G)	REMOVE YELLOW THERMOPLASTIC TRAFFIC STRIPE (HAZARDOUS WASTE)	REMOVE PAVEMENT MARKINGS	OBJECT MARKER	REMOVE PAVEMENT MARKER
				LF				EA		LF	SQFT	EA	
PD-1	"CR1" 65+00 TO 66+33	NB	8	133							25		
	"CR1" 65+30 TO 72+06	NB	27B		676								
	"CR1" 66+33 TO 68+51	NB	36A				218	12				8	
	"CR1" 68+51 TO 72+06	NB	25A			355		18	14	355		10	
SUBTOTAL				133	676	355	218	30	14	355	25	18	30
TOTAL				133	1031		218	30	14	355	25	18	30

1 REPLACED PER ADDENDUM No. 1 DATED JANUARY 19, 2016

SUMMARY OF QUANTITIES

Q-1

STATE OF CALIFORNIA - DEPARTMENT OF TRANSPORTATION
DESIGN
FUNCTIONAL SUPERVISOR: SOTERO ANGELES
CALCULATED-DESIGNED BY: LUIS GUTIERREZ
CHECKED BY: AARON WANG
REVISED BY: LG
DATE REVISED: 3/25/14

LAST REVISION 10-15-15
DATE PLOTTED => 15-JAN-2016
TIME PLOTTED => 10:42

Dist	COUNTY	ROUTE	POST MILES TOTAL PROJECT	SHEET No.	TOTAL SHEETS
04	Ala	13	8.3	36	108

LICENSED LANDSCAPE ARCHITECT

10-19-15
PLANS APPROVAL DATE

LICENSED LANDSCAPE ARCHITECT
SALLY BANG No. 5066
Signature
11-30-15
Renewal Date
04-28-14
Date
STATE OF CALIFORNIA

THE STATE OF CALIFORNIA OR ITS OFFICERS OR AGENTS SHALL NOT BE RESPONSIBLE FOR THE ACCURACY OR COMPLETENESS OF SCANNED COPIES OF THIS PLAN SHEET.

NOTE:

DIMENSIONS OF THE PAVEMENT STRUCTURES (STRUCTURAL SECTIONS) ARE SUBJECT TO TOLERANCES SPECIFIED IN THE STANDARD SPECIFICATIONS.

EROSION CONTROL TYPE 1

SEQUENCE	ITEM	MATERIAL		APPLICATION RATE
		DESCRIPTION	TYPE	
1	RECP (NETTING)	NETTING	TYPE ~~A~~ B	
2	HYDROSEED	FERTILIZER	ORGANIC	1200 LBS/ACRE
		SEED	MIX 1	44.15 LB/ACRE
		FIBER	WOOD	285 LB/ACRE
3	HYDROMULCH	FIBER	WOOD	285 LB/ACRE
		TACKIFIER	PLANT BASE	125 LB/ACRE

1

EROSION CONTROL QUANTITIES

SHEET	FIBER ROLLS LF	HYDROSEED SQFT	HYDROMULCH SQFT	RECP (NETTING) SQFT
EC-1	970	24,000	24,000	24,000
TOTAL	970	24,000	24,000	24,000

1

SEED MIX 1

BOTANICAL NAME (COMMON NAME)	PERCENT GERMINATION (MINIMUM)	POUNDS PURE LIVE SEED PER ACRE (SLOPE MEASUREMENT)
LUPINUS BICOLOR (PYGMY LEAF LUPINE)	50	4
BACCHARIS PILULARIS (COYOTE BRUSH)	25	0.15
BROMUS CARINATUS[1] (CALIFORNIA BROME)	50	11
ELYMUS GLAUCUS (BLUE WILDRYE)	50	9
ERIOGONUM FASCICULATUM (CALIFORNIA BUCKWHEAT)	10	1.5
ESCHSCHOLZIA CALIFORNICA[1] (CALIFORNIA POPPY)	50	2
HORDEUM BRACHYANTHERUM (MEADOW BARLEY)	50	11
MIMULUS AURANTIACUS (STICKY MONKEY FLOWER)	40	0.5
VULPIA MICROSTACHYS (SMALL FESCUE)	50	5
[1]SEED PRODUCED IN CALIFORNIA ONLY.	TOTAL	44.15

FIBER ROLLS

SEQUENCE	ITEM	TYPE	REMARKS
FIBER ROLLS MUST BE INSTALLED AFTER RECP (NETTING) AND BEFORE HYDROSEED.	FIBER ROLLS	TYPE B 8" TO 10" Dia	TYPE 1 FIBER ROLL INSTALLATION

ROLLED EROSION CONTROL PRODUCT

SEQUENCE	ITEM	TYPE	DESCRIPTION
INSTALL RECP (NETTING) BEFORE FIBER ROLL	NETTING	TYPE B	WOVEN COIR

1 **REPLACED PER ADDENDUM No. 1 DATED JANUARY 19, 2016**

EROSION CONTROL LEGEND

ECL-1

STATE OF CALIFORNIA - DEPARTMENT OF TRANSPORTATION
Caltrans® WATER QUALITY

SENIOR LANDSCAPE ARCHITECT: DAVID YAM
CALCULATED-DESIGNED BY: SALLY BANG
CHECKED BY: ANGELA KWAN
REVISED BY: SB
DATE REVISED: 9/3/15

LAST REVISION 09-03-15
DATE PLOTTED => 15-JAN-2016
TIME PLOTTED => 10:42

Dist	COUNTY	ROUTE	POST MILES TOTAL PROJECT	SHEET No.	TOTAL SHEETS
04	Ala	13	8.3	38	108

REGISTERED ELECTRICAL ENGINEER 4/2/14 DATE

PLANS APPROVAL DATE 10-19-15

REGISTERED PROFESSIONAL ENGINEER Mahmood Noii No. 13717 Exp. 6-30-17 ELECT STATE OF CALIFORNIA

THE STATE OF CALIFORNIA OR ITS OFFICERS OR AGENTS SHALL NOT BE RESPONSIBLE FOR THE ACCURACY OR COMPLETENESS OF SCANNED COPIES OF THIS PLAN SHEET.

NOTE:

FOR ACCURATE RIGHT OF WAY DATA, CONTACT RIGHT OF WAY ENGINEERING AT THE DISTRICT OFFICE.

ELECTRICAL INDEX

SHEET No.	DESCRIPTION
E-1	LIGHTING
E-2	LIGHTING (STAGE CONSTRUCTION) STAGE 1
E-3	ELECTRICAL DETAILS
E-4	ELECTRICAL QUANTITIES

LEGEND:

1. INSTALL PERMANENT PULL BOX OUTSIDE CONSTRUCTION AREA
2. INSTALL TEMPORARY WOOD POLE WITH 200 W HPS LUMINAIRE BEHIND K-RAIL. FOR WOOD POLE INSTALLATION, SEE SHEETS C-5 TO C-8. USE CASE 1N WITH POLE ATTACHMENTS (3), (6), (8) ON SHEET C-6.
   RC WOOD POLE AND LUMINAIRE WHEN NO LONGER NEEDED.
3. INSTALL 1½"C, 2#8 (240 V, LIGHTING)
   RC CONDUIT AT THE END OF STAGE CONSTRUCTION.
4. RC TEMPORARY EQUIPMENT AT THE END OF STAGE CONSTRUCTION.
5. INSTALL 1½"C, 2#8 (240 V, LIGHTING), 3#14 (120 V, PEU).
6. PROVIDE SERVICE EQUIPMENT ITEMS (1) THROUGH (14) PER SERVICE WIRING DIAGRAM ON SHEET E-3. INSTALL ENCLOSURE 1 FOOT FROM THE R/W FENCE WITH DOOR FACING FERNWOOD Dr.
7. AB EXISTING 1½"C 2#8. CONTACT PG&E TO DE-ENERGIZE POWER BEFORE ABANDONING CONDUIT.
8. INSTALL 2"C, 2#8.
9. EXISTING 1½"C, 2#8 (240 V, LIGHTING), 3#14 (120 V, PEU). REMOVE 3#14 (120 V, PEU).
10. EXISTING 1½"C, 2#8.
11. INSTALL PERMANENT EQUIPMENT, SEE SHEET E-1.
12. INSTALL TYPE 21 LIGHTING STANDARD WITH 165 W LED LUMINAIRES.
13. INSTALL 2"C, 2#8 (240 V, LIGHTING) IN Conc BARRIER.
14. RS THE EXISTING LIGHTING STANDARD AND HPS LUMINAIRE.

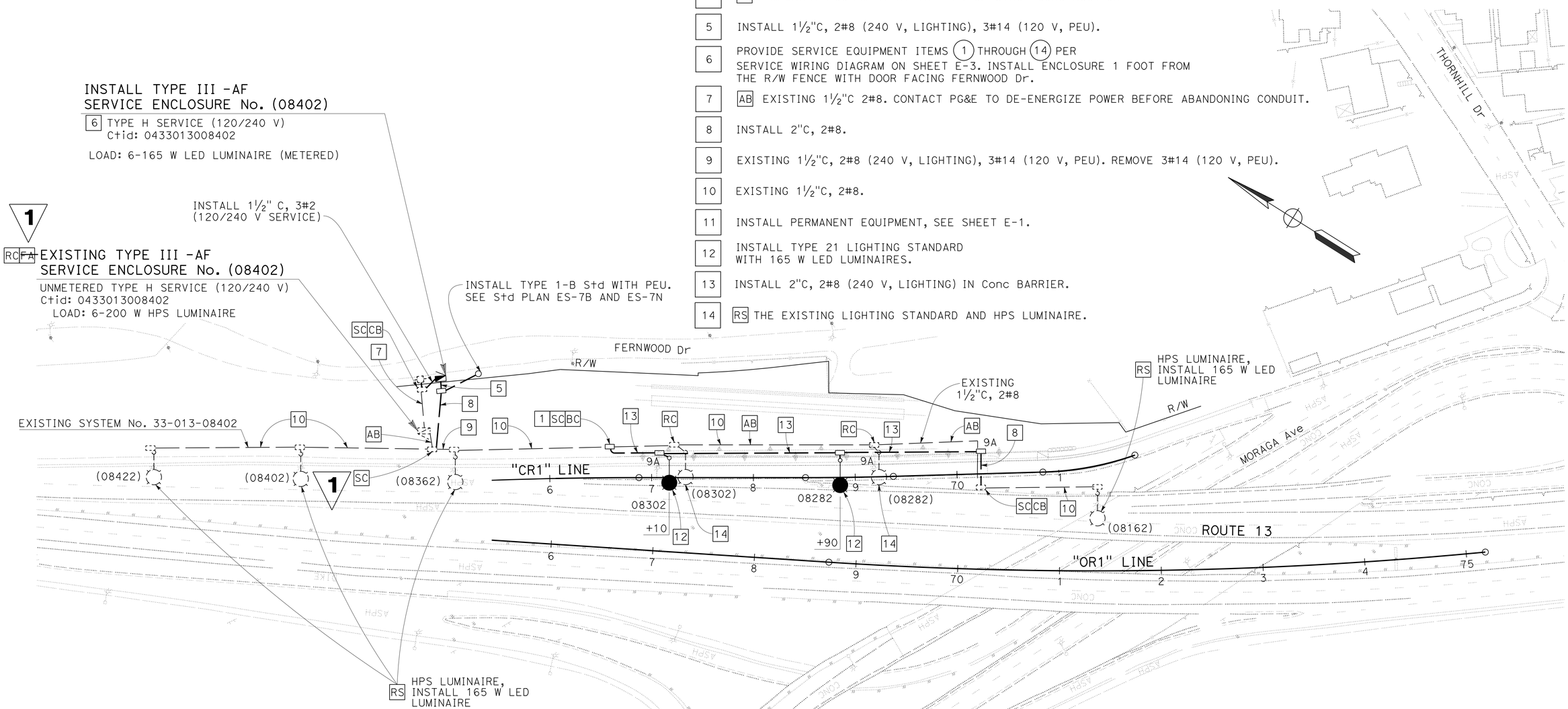

1 REPLACED PER ADDENDUM No. 1 DATED JANUARY 19, 2016

APPROVED FOR ELECTRICAL WORK ONLY

LIGHTING

SCALE: 1" = 50'

E-1

STATE OF CALIFORNIA - DEPARTMENT OF TRANSPORTATION

ELECTRICAL

FUNCTIONAL SUPERVISOR: BEHZAD GOLEMOHAMMADI

CALCULATED-DESIGNED BY: SOHEILA BANA

CHECKED BY: BARON OWYEONG

REVISED BY: SB

DATE REVISED: 3/27/14

LAST REVISION 09-23-15

DATE PLOTTED => 15-JAN-2016

TIME PLOTTED => 10:42

Dist	COUNTY	ROUTE	POST MILES TOTAL PROJECT	SHEET No.	TOTAL SHEETS
04	Ala	13	8.3	39	108

M Noii 4/2/14
REGISTERED ELECTRICAL ENGINEER DATE

10-19-15
PLANS APPROVAL DATE

REGISTERED PROFESSIONAL ENGINEER Mahmood Noii No. 13717 Exp. 6-30-17 ELECT STATE OF CALIFORNIA

THE STATE OF CALIFORNIA OR ITS OFFICERS OR AGENTS SHALL NOT BE RESPONSIBLE FOR THE ACCURACY OR COMPLETENESS OF SCANNED COPIES OF THIS PLAN SHEET.

NOTE:

FOR ACCURATE RIGHT OF WAY DATA, CONTACT
RIGHT OF WAY ENGINEERING AT THE DISTRICT OFFICE.

1 REPLACED PER ADDENDUM No. 1 DATED JANUARY 19, 2016

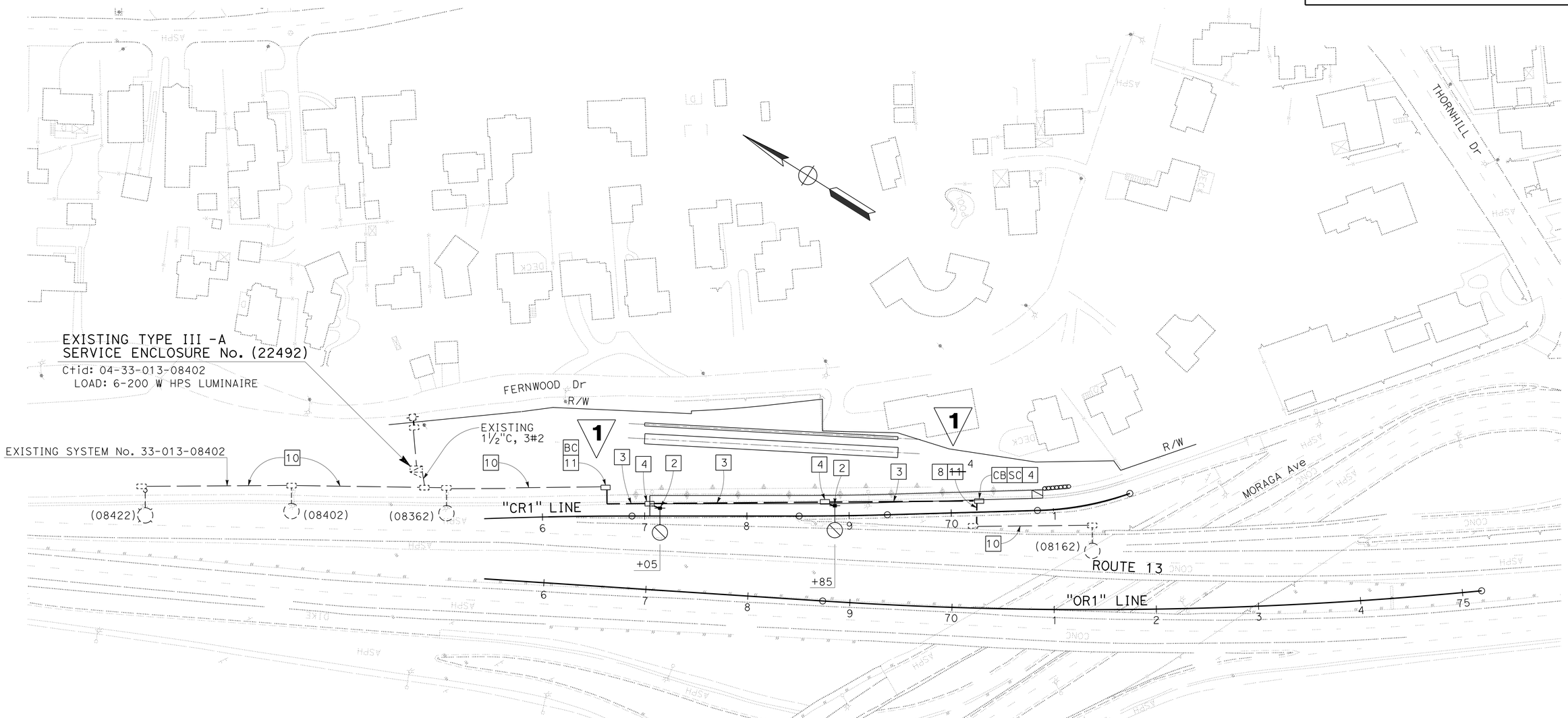

LIGHTING
(STAGE CONSTRUCTION)
STAGE 1

SCALE: 1" = 50'

APPROVED FOR ELECTRICAL WORK ONLY

FOR NOTES, ABBREVIATIONS AND LEGEND, SEE SHEET E-1

E-2

STATE OF CALIFORNIA - DEPARTMENT OF TRANSPORTATION
Caltrans
ELECTRICAL

FUNCTIONAL SUPERVISOR: BEHZAD GOLEMOHAMMADI
CALCULATED-DESIGNED BY: SOHEILA BANA
CHECKED BY: BARON OWYEONG
REVISED BY: SB
DATE REVISED: 3/27/14

LAST REVISION 06-09-14
DATE PLOTTED => 15-JAN-2016
TIME PLOTTED => 10:42

Dist	COUNTY	ROUTE	POST MILES TOTAL PROJECT	SHEET No.	TOTAL SHEETS
04	Ala	13	8.3	41	108

1

m Noii 4/2/14
REGISTERED ELECTRICAL ENGINEER DATE

10-19-15
PLANS APPROVAL DATE

REGISTERED PROFESSIONAL ENGINEER Mahmood Noii No. 13717 Exp. 6-30-17 ELECT STATE OF CALIFORNIA

THE STATE OF CALIFORNIA OR ITS OFFICERS OR AGENTS SHALL NOT BE RESPONSIBLE FOR THE ACCURACY OR COMPLETENESS OF SCANNED COPIES OF THIS PLAN SHEET.

LIGHTING

SHEET No.	LED LUMINAIRE ROADWAY 1	TYPE 21 STANDARD LIGHTING	PB 9A	PB	CONDUIT		CONDUCTOR		TYPE 1B
					1½"	2"	No. 8	No. 14	
	EA				ft				EA
E-1	4	2	3	1	550	700	1100	300	1

LIGHTING (STAGE CONSTRUCTION)

SHEET No.	PB	WOOD POLE WITH LUMINAIRE	CONDUIT		CONDUCTOR
			1½"	2"	No. 8
	EA		ft		
E-2	4	2	550	50	1060

ITEMS SHOWN IN THESE TABLES ARE NOT A SEPARATE PAY ITEM. FOR INFORMATION ONLY.

1 **REPLACED PER ADDENDUM No. 1 DATED JANUARY 19, 2016**

ELECTRICAL QUANTITIES

E-4

STATE OF CALIFORNIA - DEPARTMENT OF TRANSPORTATION
Caltrans
ELECTRICAL
FUNCTIONAL SUPERVISOR: BEHZAD GOLEMOHAMMADI
CALCULATED-DESIGNED BY: SOHEILA BANA
CHECKED BY: BARON OWYEONG
REVISED BY: SB
DATE REVISED: 3/27/14

LAST REVISION 06-09-14
DATE PLOTTED => 15-JAN-2016
TIME PLOTTED => 10:42

Dist	COUNTY	ROUTE	POST MILES TOTAL PROJECT	SHEET No.	TOTAL SHEETS
04	Ala	13	8.3	44A	108

Randell D. Hiatt
REGISTERED CIVIL ENGINEER

July 19, 2013
PLANS APPROVAL DATE

REGISTERED PROFESSIONAL ENGINEER
Randell D. Hiatt
No. C50200
Exp. 6-30-15
CIVIL
STATE OF CALIFORNIA

THE STATE OF CALIFORNIA OR ITS OFFICERS OR AGENTS SHALL NOT BE RESPONSIBLE FOR THE ACCURACY OR COMPLETENESS OF SCANNED COPIES OF THIS PLAN SHEET.

TO ACCOMPANY PLANS DATED 10-19-15

2010 REVISED STANDARD PLAN RSP A77L3

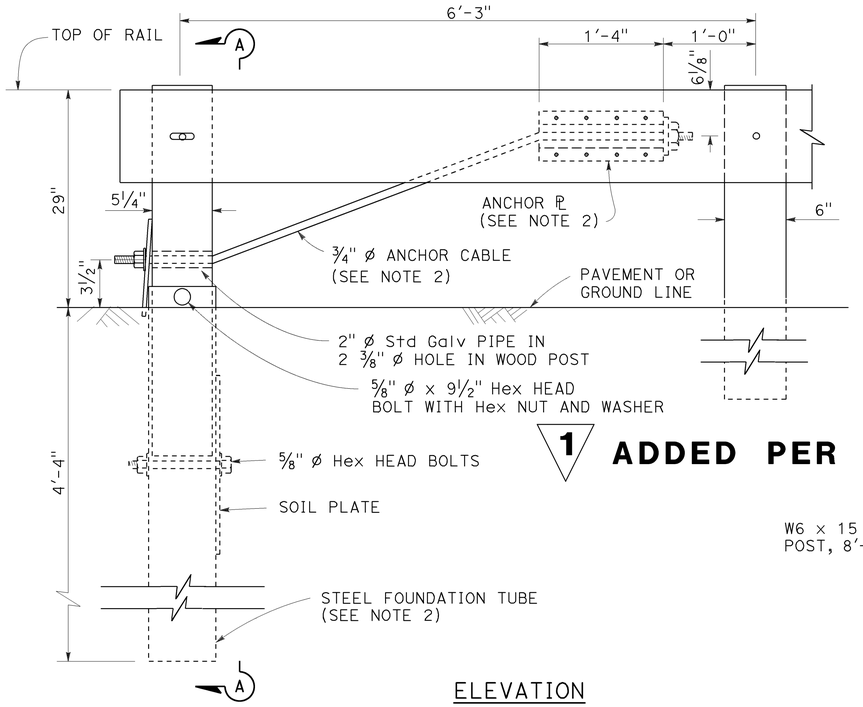

ELEVATION
END ANCHOR
ASSEMBLY (TYPE SFT)

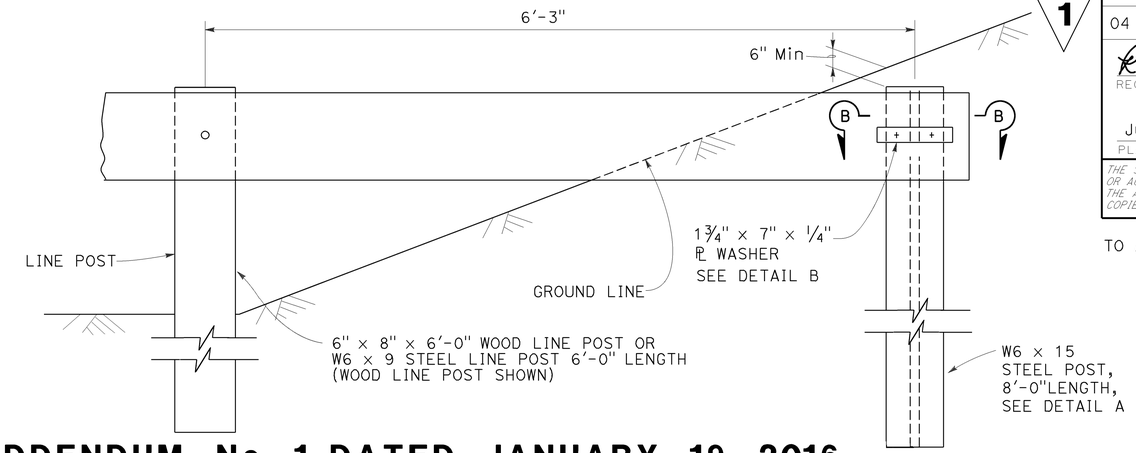

1 ADDED PER ADDENDUM No. 1 DATED JANUARY 19, 2016

BURIED POST END ANCHOR

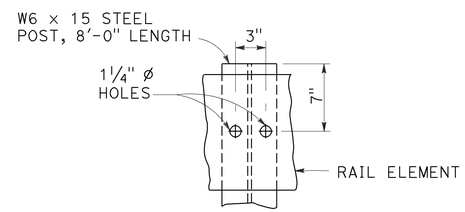

DETAIL A

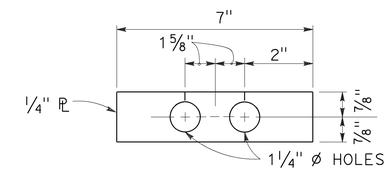

DETAIL B

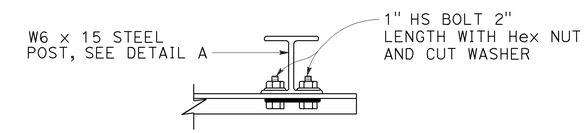

SECTION B-B

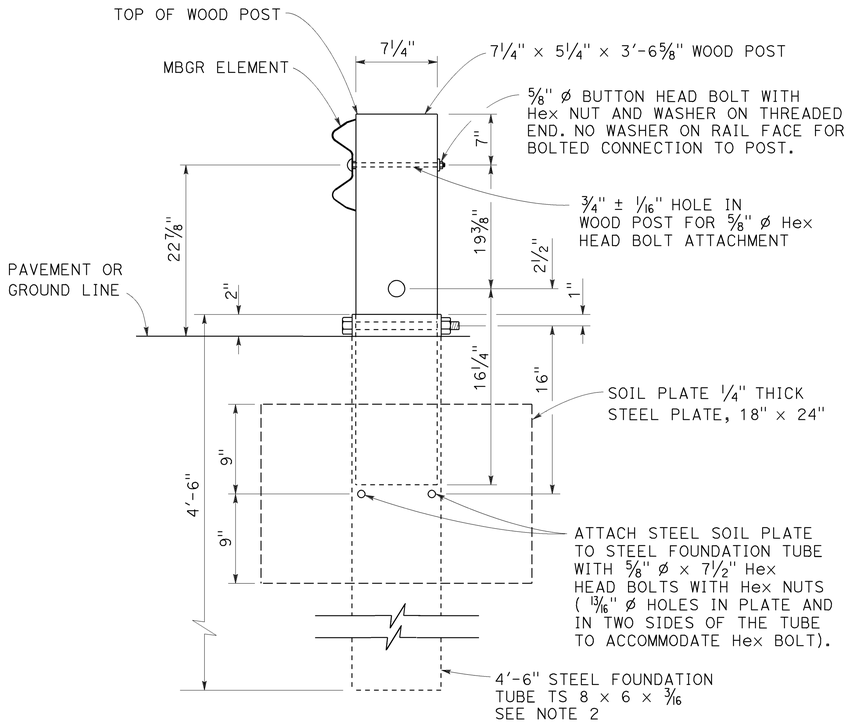

SECTION A-A

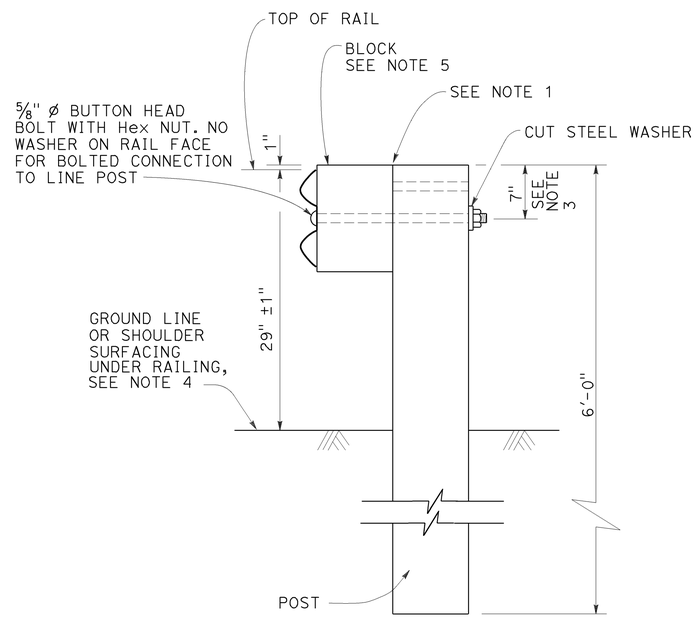

TYPICAL LINE
POST INSTALLATION

NOTES:

1. For wood post and wood block, toenail with 2-16d Galv nails in top of block. For steel post and notched wood or plastic block, notched face of block faces steel post.
2. A 6'-0" Length steel foundation tube, TS 8 x 6 x 3/16, without a soil plate, may be furnished and installed in place of the 4'-6" length steel foundation tube and soil plate shown, Minimum embadment of the 6'-0" length tube shall be 5'-9". A 5/8" ø Hex head bolt and nut shall be installed in the hole in the 6'-0" length tube to keep the wood post from dropping into the tube.
3. To connect railing to 27" terminal system end treatment, transition the top of railing height at a ratio of 120:1 to terminal system end treatment height plus one 12'-6" standard railing section at the transitioned height for a horizontal connection to the end treatment.
4. Install posts in soil.
5. See Revised Standard Plans RSP A77N1 and RSP A77N2 for details.
6. Holes excavation in the slope to construct the buried post end anchor shall be backfilled with selected earth, placed in layers approximately 1'-0" thick. Each layer shall be moistened and thoroughly compacted.

STATE OF CALIFORNIA
DEPARTMENT OF TRANSPORTATION

METAL BEAM GUARD RAILING RECONSTRUCT INSTALLATION

NO SCALE

RSP A77L3 DATED JULY 19, 2013 SUPPLEMENTS THE STANDARD PLANS BOOK DATED 2010.

REVISED STANDARD PLAN RSP A77L3

7-16-13

Dist	COUNTY	ROUTE	POST MILES TOTAL PROJECT	SHEET No.	TOTAL SHEETS
04	Ala	13	8.3	60A	108

REGISTERED CIVIL ENGINEER

April 19, 2013
PLANS APPROVAL DATE

REGISTERED PROFESSIONAL ENGINEER Gurinderpal Bhullar No. C48815 Exp. 9-30-14 CIVIL STATE OF CALIFORNIA

THE STATE OF CALIFORNIA OR ITS OFFICERS OR AGENTS SHALL NOT BE RESPONSIBLE FOR THE ACCURACY OR COMPLETENESS OF SCANNED COPIES OF THIS PLAN SHEET.

TO ACCOMPANY PLANS DATED 10-19-15

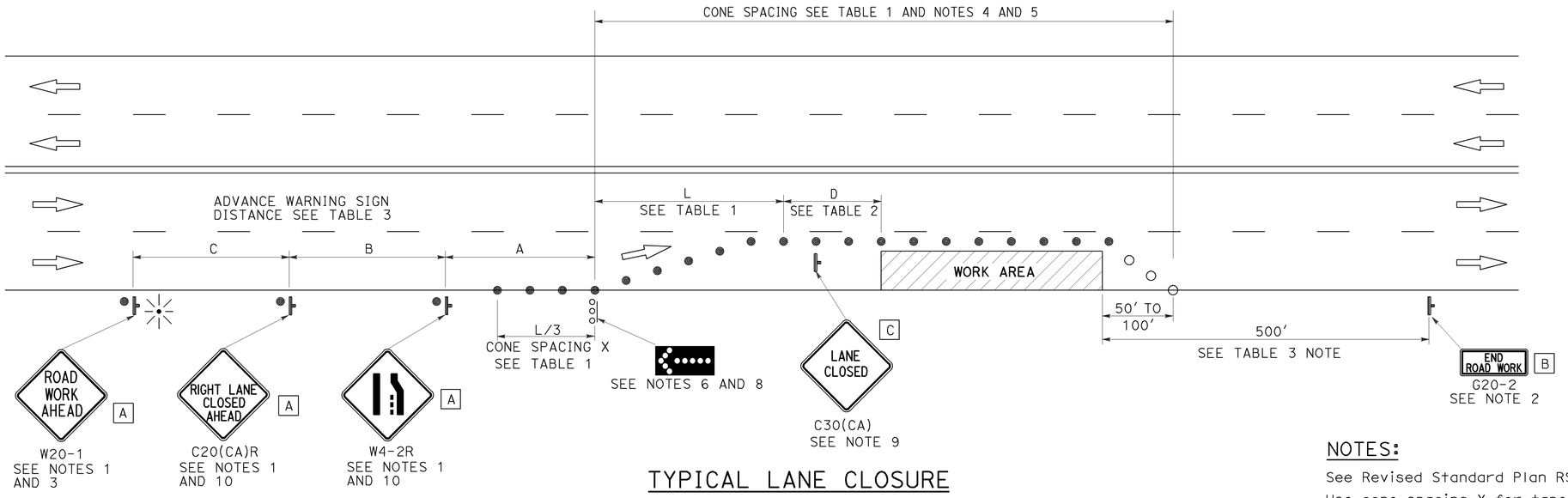

TYPICAL LANE CLOSURE

NOTES:

See Revised Standard Plan RSP T9 for tables.

Use cone spacing X for taper segment, Y for tangent segment or Z for conflict situations, as approriate, per Table 1, unless X, Y, or Z cone spacing is shown on this sheet.

Unless otherwise specified in the special provisions, all temporary warning signs shall have black legend on fluorescent orange background.

California codes are designated by (CA). Otherwise, Federal (MUTCD) codes are shown.

LEGEND

- TRAFFIC CONE
- TRAFFIC CONE (OPTIONAL TAPER)
- TEMPORARY TRAFFIC CONTROL SIGN
- FLASHING ARROW SIGN (FAS)
- FAS SUPPORT OR TRAILER
- PORTABLE FLASHING BEACON

SIGN PANEL SIZE (Min)

A	48" x 48"
B	36" x 18"
C	30" x 30"

NOTES:

1. Each advance warning sign shall be equipped with at least two flags for daytime closure. Each flag shall be at least 16" x 16" in size and shall be orange or fluorescent red-orange in color. Flashing beacons shall be placed at the locations indicated for lane closure during hours of darkness.
2. A G20-2 "END ROAD WORK" sign, as appropriate, shall be placed at the end of the lane closure unless the end of work area is obvious, or ends within a larger project's limits.
3. If the W20-1 sign would follow within 2000' of a stationary W20-1 or G20-1 "ROAD WORK NEXT _____ MILES", use a C20(CA) sign for the first advance warning sign.
4. All cones used for lane closures during the hours of darkness shall be fitted with retroreflective bands (or sleeves) as specified in the specifications.
5. Portable delineators, placed at one-half the spacing indicated for traffic cones, may be used instead of cones for daytime closures only.
6. Flashing arrow sign shall be either Type I or Type II.
7. For approach speeds over 50 mph, use the "Traffic Control System for Lane Closure On Freeways And Expressways" plan for lane closure details and requirements.
8. A minimum 1500' of sight distance shall be provided where possible for vehicles approaching the first flashing arrow sign. Lane closures shall not begin at the top of crest vertical curve or on a horizontal curve.
9. Place a C30(CA) sign every 2000' throughout length of lane closure.
10. Median lane closures shall conform to the details as shown except that C20(CA)L and W4-2L signs shall be used.
11. At least one person shall be assigned to provide full time maintenance of traffic control devices for lane closure unless, otherwise directed by the Engineer.

1 **ADDED PER ADDENDUM No. 1 DATED JANUARY 19, 2016**

STATE OF CALIFORNIA
DEPARTMENT OF TRANSPORTATION

TRAFFIC CONTROL SYSTEM FOR LANE CLOSURE ON MULTILANE CONVENTIONAL HIGHWAYS

NO SCALE

RSP T11 DATED APRIL 19, 2013 SUPERSEDES STANDARD PLAN T11
DATED MAY 20, 2011 - PAGE 239 OF THE STANDARD PLANS BOOK DATED 2010.

REVISED STANDARD PLAN RSP T11

2010 REVISED STANDARD PLAN RSP T11

4-2-13

Dist	COUNTY	ROUTE	POST MILES TOTAL PROJECT	SHEET No.	TOTAL SHEETS
04	Ala	13	8.3	60B	108

REGISTERED CIVIL ENGINEER

April 19, 2013
PLANS APPROVAL DATE

REGISTERED PROFESSIONAL ENGINEER Gurinderpal Bhullar No. C48815 Exp. 9-30-14 CIVIL STATE OF CALIFORNIA

THE STATE OF CALIFORNIA OR ITS OFFICERS OR AGENTS SHALL NOT BE RESPONSIBLE FOR THE ACCURACY OR COMPLETENESS OF SCANNED COPIES OF THIS PLAN SHEET.

TO ACCOMPANY PLANS DATED 10-19-15

LEGEND

- TRAFFIC CONE
- TEMPORARY TRAFFIC CONTROL SIGN
- FLASHING ARROW SIGN (FAS)
- FAS SUPPORT OR TRAILER
- PORTABLE FLASHING BEACON

SIGN PANEL SIZE (Min)

A	48" x 48"
B	24" x 24"
C	36" x 18"

NOTES:

See Revised Standard Plan RSP T9 for tables.

Use cone spacing X for taper segment, Y for tangent segment or Z for conflict situations, as approriate, per Table 1, unless X, Y, or Z cone spacing is shown on this sheet.

Unless otherwise specified in the special provisions, all temporary warning signs shall have black legend on fluorescent orange background.

California codes are designated by (CA). Otherwise, Federal (MUTCD) codes are shown.

TYPICAL HALF ROAD CLOSURE

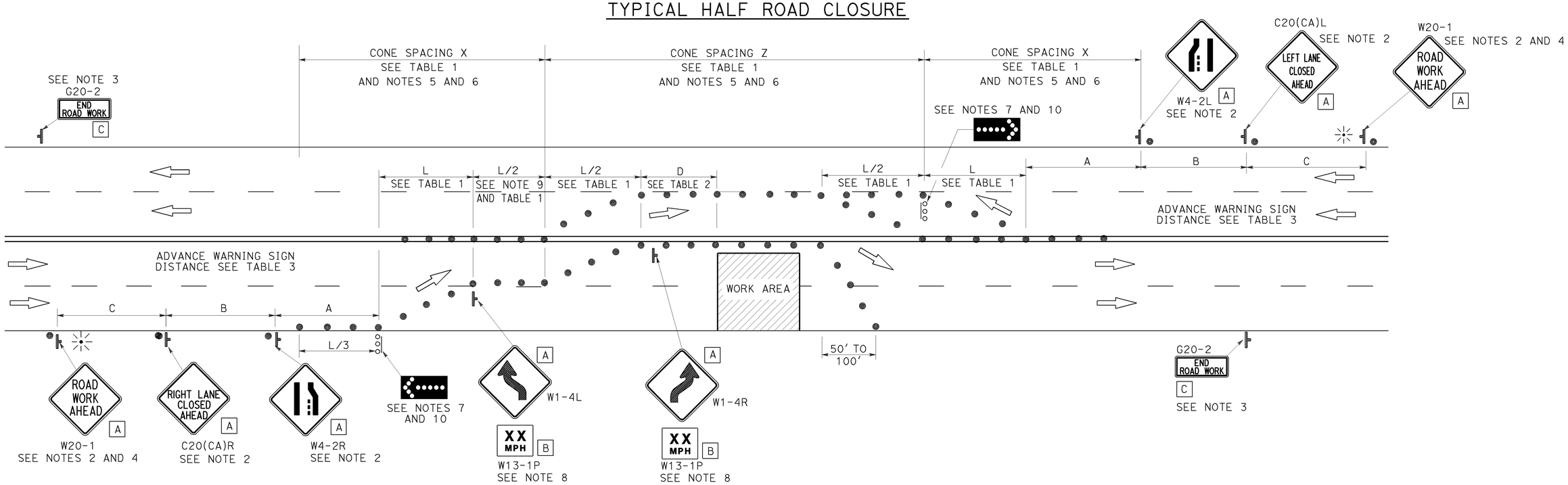

NOTES:

1. At least one person shall be assigned to provide full time maintenance of traffic control devices for lane closure unless, otherwise directed by the Engineer.
2. Each advance warning sign in each direction of travel shall be equipped with at least two flags for daytime closure. Each flag shall be at least 16" x 16" in size and shall be orange or fluorescent red-orange in color. Flashing beacons shall be placed at the locations indicated for lane closure during hours of darkness.
3. A G20-2 "END ROAD WORK" sign, as appropriate, shall be placed at the end of the lane closure unless the end of work area is obvious, or ends within a larger project's limits.
4. If the W20-1 sign would follow within 2000' of a stationary W20-1 or G20-1 "ROAD WORK NEXT _____ MILES", use a C20(CA) sign for the first advance warning sign.
5. All cones used for lane closures during the hours of darkness shall be fitted with retroreflective bands (or sleeves) as specified in the specifications.
6. Portable delineators, placed at one-half the spacing indicated for traffic cones, may be used instead of cones for daytime closures only.
7. Flashing arrow signs shall be either Type I or Type II.
8. Advisory speed will be determined by the Engineer. The W13-1P Plaque will not be required when advisory speed is more than the posted or maximum speed limit.
9. Unless otherwise specified in the special provisions, the tangent (L/2) shall be used.
10. A minimum 1500' of sight distance shall be provided where possible for vehicles approaching the first flashing arrow sign. Lane closures shall not begin at the top of crest vertical curve or on a horizontal curve.

1 **ADDED PER ADDENDUM No. 1 DATED JANUARY 19, 2016**

STATE OF CALIFORNIA
DEPARTMENT OF TRANSPORTATION

TRAFFIC CONTROL SYSTEM FOR HALF ROAD CLOSURE ON MULTILANE CONVENTIONAL HIGHWAYS AND EXPRESSWAYS

NO SCALE

RSP T12 DATED APRIL 19, 2013 SUPERSEDES STANDARD PLAN T12
DATED MAY 20, 2011 - PAGE 240 OF THE STANDARD PLANS BOOK DATED 2010.

REVISED STANDARD PLAN RSP T12

2010 REVISED STANDARD PLAN RSP T12

4-2-13

Dist	COUNTY	ROUTE	POST MILES TOTAL PROJECT	SHEET No.	TOTAL SHEETS
04	Ala	13	8.3	65A	108

1

Theresa Gabriel
REGISTERED ELECTRICAL ENGINEER

October 30, 2015
PLANS APPROVAL DATE

REGISTERED PROFESSIONAL ENGINEER
Theresa Aziz Gabriel
No. E15129
Exp. 6-30-16
ELECTRICAL
STATE OF CALIFORNIA

THE STATE OF CALIFORNIA OR ITS OFFICERS OR AGENTS SHALL NOT BE RESPONSIBLE FOR THE ACCURACY OR COMPLETENESS OF SCANNED COPIES OF THIS PLAN SHEET.

TO ACCOMPANY PLANS DATED 10-19-15

2010 REVISED STANDARD PLAN RSP ES-2C

NOTES:

1. The plan shows the approximate location of devices within the enclosure. Components may be rearranged, however, the "working" clearances within the service equipment enclosure shall be maintained.

2. In unpaved areas a raised portland cement concrete pad 2'-0" x 4" x width of foundation shall be constructed in front of new service equipment enclosure installation. Pad shall be set to elevation of foundation.

3. Plug-in circuit breakers may be mounted in the vertical or horizontal position. Cable-in/cable-out circuit breakers shall be mounted in the vertical position.

4. Type III-AF and Type III-BF service equipment enclosures shall have the meter viewing windows located on the front side of the service equipment enclosures.

5. Type III-AR and Type III-BR service equipment enclosure shall be similarly constructed as Type III-AF and Type III-BF respectively, except the meter viewing windows shall be located on the back side of the service equipment enclosures.

STATE OF CALIFORNIA
DEPARTMENT OF TRANSPORTATION

ELECTRICAL SYSTEMS (SERVICE EQUIPMENT ENCLOSURE NOTES TYPE III SERIES)

NO SCALE

RSP ES-2C DATED OCTOBER 30, 2015 SUPERSEDES STANDARD PLAN ES-2C DATED MAY 20, 2011 - PAGE 430 OF THE STANDARD PLANS BOOK DATED 2010.

1 ADDED PER ADDENDUM No. 1 DATED JANUARY 19, 2016

REVISED STANDARD PLAN RSP ES-2C

8-19-15

Dist	COUNTY	ROUTE	POST MILES TOTAL PROJECT	SHEET No.	TOTAL SHEETS
04	Ala	13	8.3	65B	108

Theresa Gabriel
REGISTERED ELECTRICAL ENGINEER

October 30, 2015
PLANS APPROVAL DATE

REGISTERED PROFESSIONAL ENGINEER Theresa Aziz Gabriel No. E15129 Exp. 6-30-16 ELECTRICAL STATE OF CALIFORNIA

THE STATE OF CALIFORNIA OR ITS OFFICERS OR AGENTS SHALL NOT BE RESPONSIBLE FOR THE ACCURACY OR COMPLETENESS OF SCANNED COPIES OF THIS PLAN SHEET.

TO ACCOMPANY PLANS DATED 10-19-15

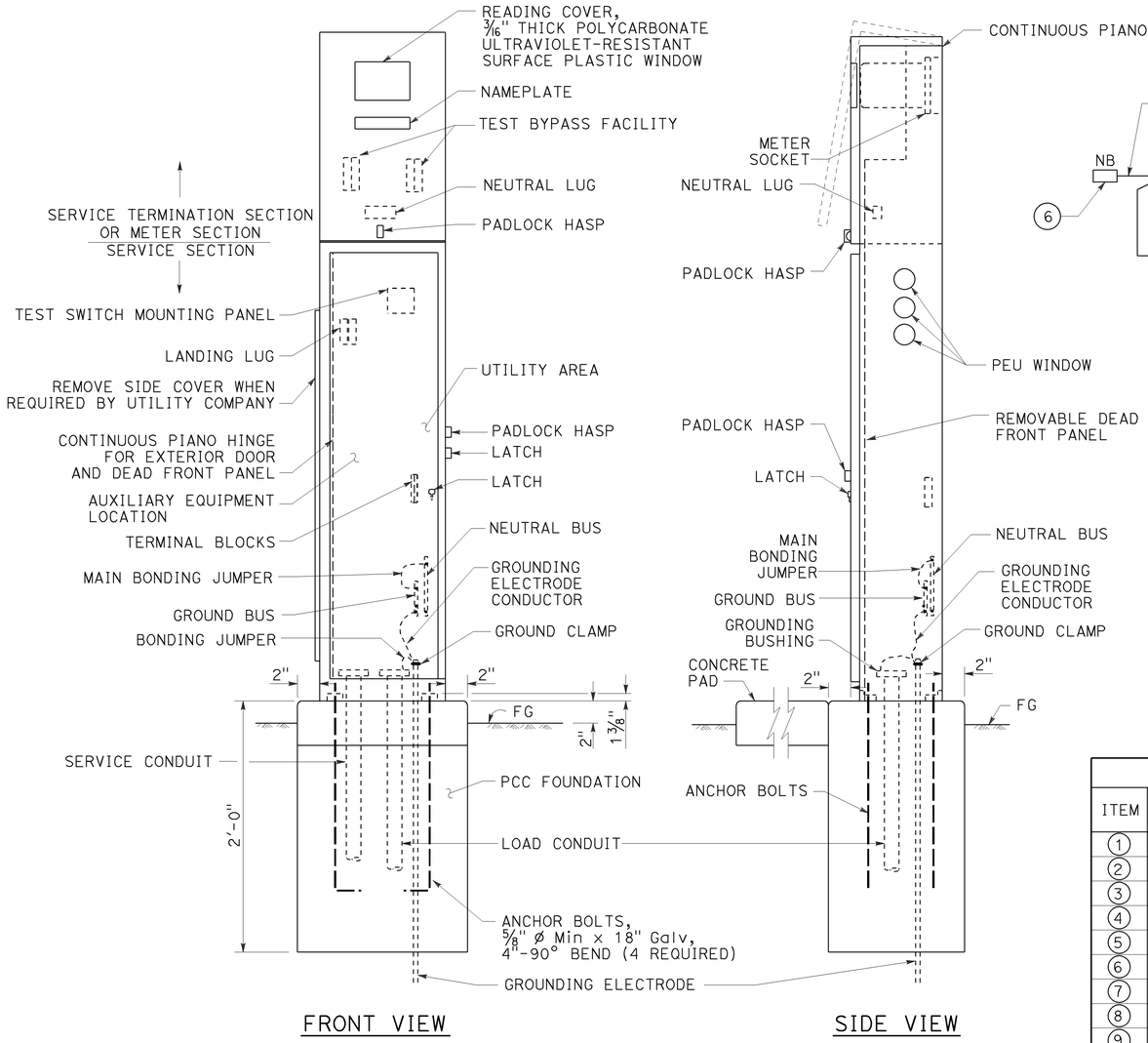

TYPE III-AF SERVICE EQUIPMENT ENCLOSURE (TYPICAL)

DETAIL A

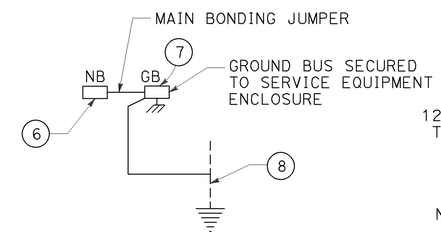

DETAIL D

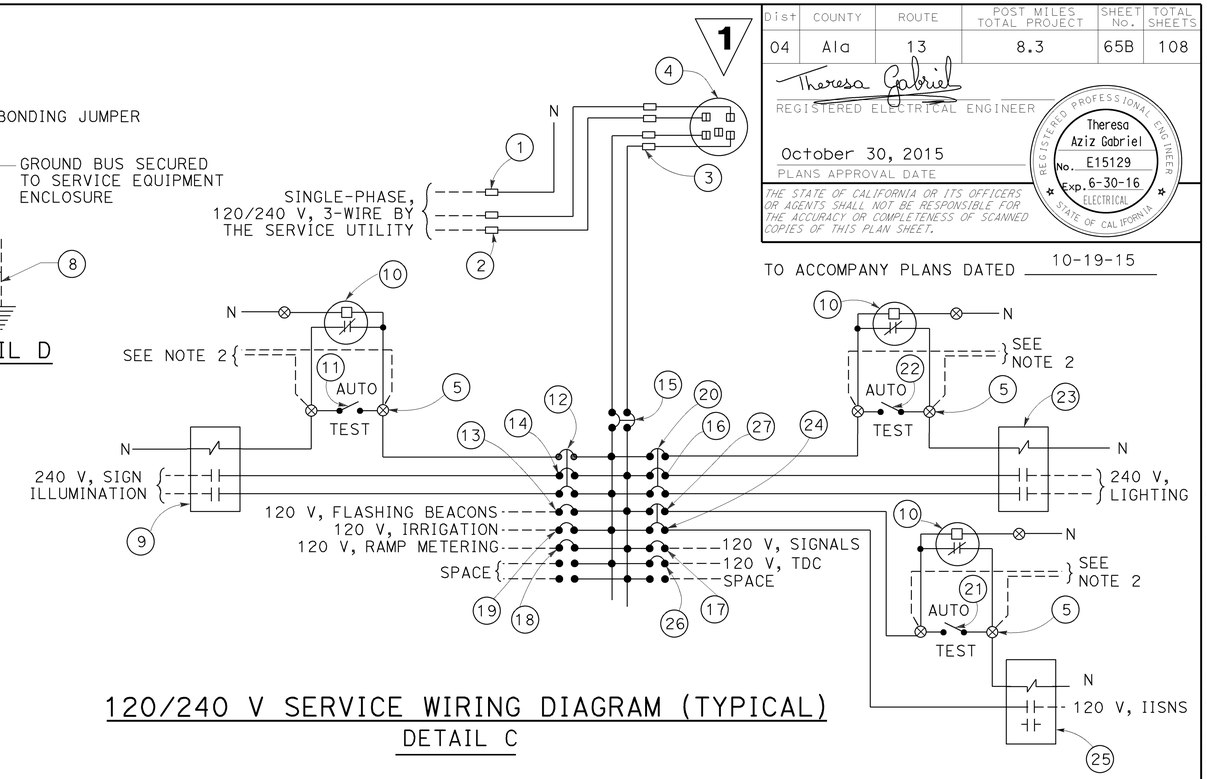

120/240 V SERVICE WIRING DIAGRAM (TYPICAL)

DETAIL C

TYPE III-A SERVICE EQUIPMENT ENCLOSURE LEGEND (120/240 V)

ITEM	COMPONENT	NAMEPLATE DESCRIPTION	ITEM	COMPONENT	NAMEPLATE DESCRIPTION
1	NEUTRAL LUG		14	30 A, 240 V, 2P, CB	SIGN ILLUMINATION
2	LANDING LUG		15	100 A, 240 V, 2P, CB	MAIN BREAKER
3	TEST BYPASS FACILITY		16	30 A, 240 V, 2P, CB	LIGHTING
4	METER SOCKET AND SUPPORT		17	50 A, 120 V, 1P, CB	SIGNALS
5	TERMINAL BLOCKS		18	30 A, 120 V, 1P, CB	RAMP METERING
6	NEUTRAL BUS		19	20 A, 120 V, 1P, CB	IRRIGATION
7	GROUND BUS		20	15 A, 120 V, 1P, CB	LIGHTING CONTROL
8	GROUNDING ELECTRODE		21	15 A, 1P, TEST SWITCH	IISNS TEST SWITCH
9	30 A, 2P, NO CONTACTOR	SIGN ILLUMINATION	22	15 A, 1P, TEST SWITCH	LIGHTING TEST SWITCH
10	PHOTOELECTRIC UNIT (NOTE 4)	PEU	23	60 A, 2P, NO CONTACTOR	LIGHTING
11	15 A, 1P, TEST SWITCH	SIGN ILLUMINATION TEST SWITCH	24	15 A, 120 V, 1P, CB	IISNS
12	15 A, 120 V, 1P, CB	SIGN ILLUMINATION CONTROL	25	30 A, 2P, NO CONTACTOR	IISNS
13	15 A, 120 V, 1P, CB	FLASHING BEACON	26	20 A, 120 V, 1P, CB	TELEPHONE DEMARCATION CABINET
			27	15 A, 120 V, 1P, CB	IISNS CONTROL

1 **ADDED PER ADDENDUM No. 1 DATED JANUARY 19, 2016**

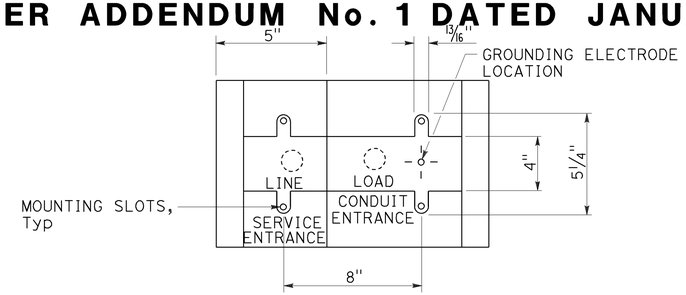

BASE FOR TYPE III-A SERVICE EQUIPMENT ENCLOSURE

DETAIL B

NOTES:

1. Unless otherwise indicated on the plans, service equipment items shall be provided for each service equipment enclosure as shown.
2. Connect to remote test switch mounted on lighting standards, sign post or structure when required.
3. Items 1 and 6 shall be isolated from the service equipment enclosure.
4. Type V photoelectric control shall be used unless otherwise indicated on the plans.
5. Item 12, 20 and 27 shall be ganged operated CB.

STATE OF CALIFORNIA
DEPARTMENT OF TRANSPORTATION

ELECTRICAL SYSTEMS (SERVICE EQUIPMENT ENCLOSURE AND TYPICAL WIRING DIAGRAM, TYPE III-A SERIES)

NO SCALE

RSP ES-2D DATED OCTOBER 30, 2015 SUPERSEDES STANDARD PLAN ES-2D DATED MAY 20, 2011 - PAGE 431 OF THE STANDARD PLANS BOOK DATED 2010.

REVISED STANDARD PLAN RSP ES-2D

2010 REVISED STANDARD PLAN RSP ES-2D

Dist	COUNTY	ROUTE	POST MILES TOTAL PROJECT	SHEET No.	TOTAL SHEETS
04	Ala	13	8.3	65C	108

1

REGISTERED CIVIL ENGINEER

October 30, 2015
PLANS APPROVAL DATE

REGISTERED PROFESSIONAL ENGINEER
Stanley P. Johnson
No. C57793
Exp. 3-31-16
CIVIL
STATE OF CALIFORNIA

THE STATE OF CALIFORNIA OR ITS OFFICERS OR AGENTS SHALL NOT BE RESPONSIBLE FOR THE ACCURACY OR COMPLETENESS OF SCANNED COPIES OF THIS PLAN SHEET.

TO ACCOMPANY PLANS DATED 10-19-15

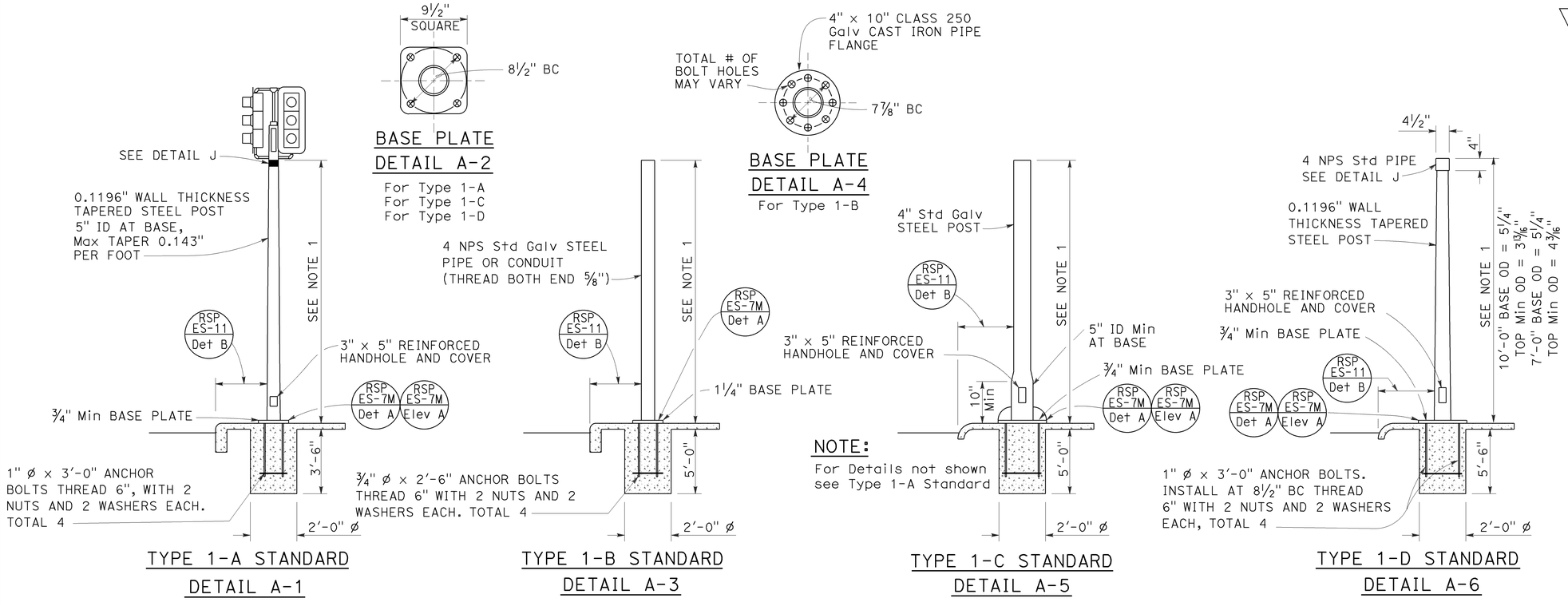

TYPE 1 SIGNAL STANDARDS

DETAIL A

NOTES:

1. Standards shall be 10'-0" ± 2" for vehicle signals and 7'-0" ± 2" for pedestrian signals unless shorter pole is noted on project plans.
2. Top of standards shall be 4½" OD.
3. Conduits shall extend 2" maximum above finished surface of foundation and for Types 1-A, 1-C and 1-D shall be sloped toward handhole.
4. Anchor bolts shall be bonded to conduit or grounding conductor.
5. For additional notes and details, see Revised Standard Plans RSP ES-7M and RSP ES-7N.
6. Pour foundation concrete against undisturbed soil.
7. For standards with handhole, locate in the downstream side of traffic.
8. Coupling nuts to be used only when shown or specified on project plans.

1 **ADDED PER ADDENDUM No. 1 DATED JANUARY 19, 2016**

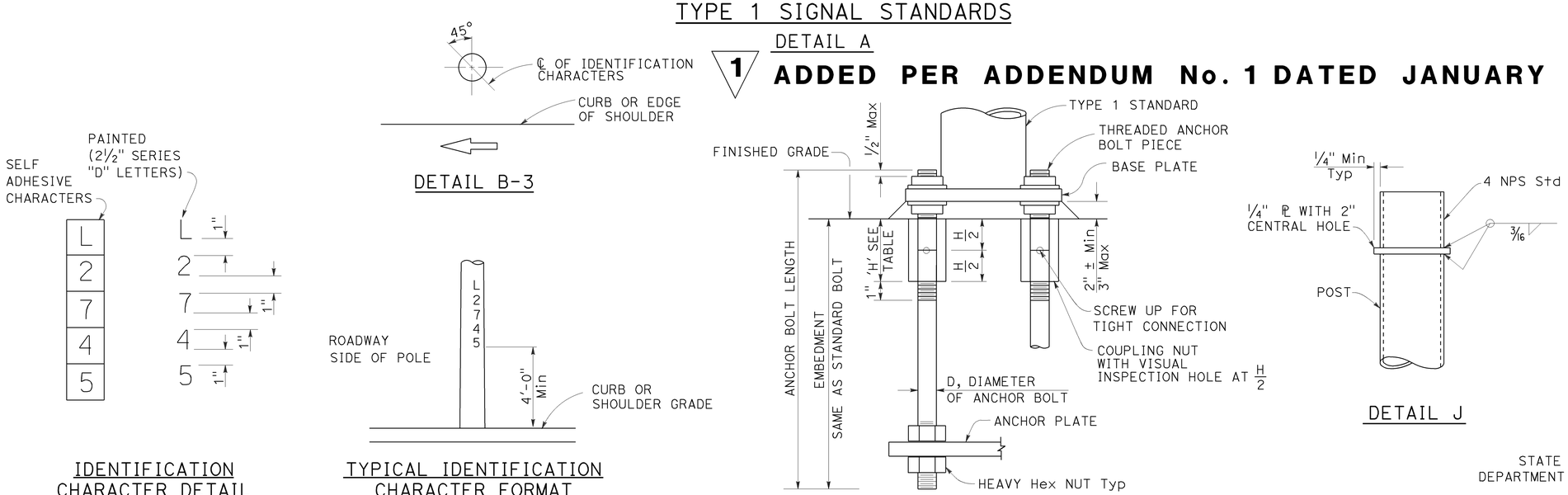

COUPLING NUT TABLE	
BOLT DIAMETER	NUT TABLE THICKNESS 'H'
¾"	2¼"
1"	3"

IDENTIFICATION CHARACTER DETAIL
DETAIL B-1

TYPICAL IDENTIFICATION CHARACTER FORMAT
DETAIL B-2

LOCATION OF EQUIPMENT IDENTIFICATION CHARACTERS ON STANDARDS AND POSTS
DETAIL B

ANCHOR BOLTS WITH SLEEVE NUTS
DETAIL C
(See Note 8)

STATE OF CALIFORNIA
DEPARTMENT OF TRANSPORTATION

ELECTRICAL SYSTEMS (SIGNAL AND LIGHTING STANDARD, TYPE 1 AND EQUIPMENT IDENTIFICATION CHARACTERS)

NO SCALE

RSP ES-7B DATED OCTOBER 30, 2015 SUPERSEDES STANDARD PLAN ES-7B DATED MAY 20, 2011 - PAGE 463 OF THE STANDARD PLANS BOOK DATED 2010.

REVISED STANDARD PLAN RSP ES-7B

2010 REVISED STANDARD PLAN RSP ES-7B

10-8-15

Dist	COUNTY	ROUTE	POST MILES TOTAL PROJECT	SHEET No.	TOTAL SHEETS
04	Ala	13	8.3	66A	108

1

Theresa Gabriel
REGISTERED ELECTRICAL ENGINEER

October 30, 2015
PLANS APPROVAL DATE

REGISTERED PROFESSIONAL ENGINEER
Theresa Aziz Gabriel
No. E15129
Exp. 6-30-16
ELECTRICAL
STATE OF CALIFORNIA

THE STATE OF CALIFORNIA OR ITS OFFICERS OR AGENTS SHALL NOT BE RESPONSIBLE FOR THE ACCURACY OR COMPLETENESS OF SCANNED COPIES OF THIS PLAN SHEET.

TO ACCOMPANY PLANS DATED 10-19-15

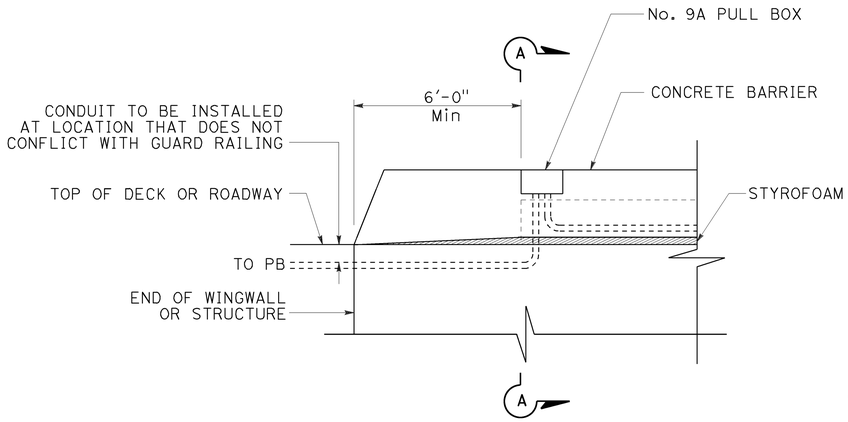

SIDE VIEW

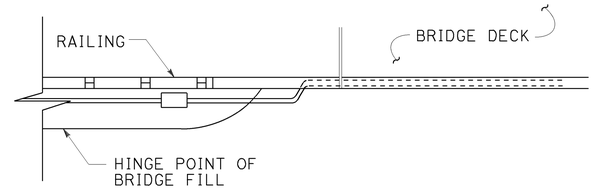

TOP VIEW

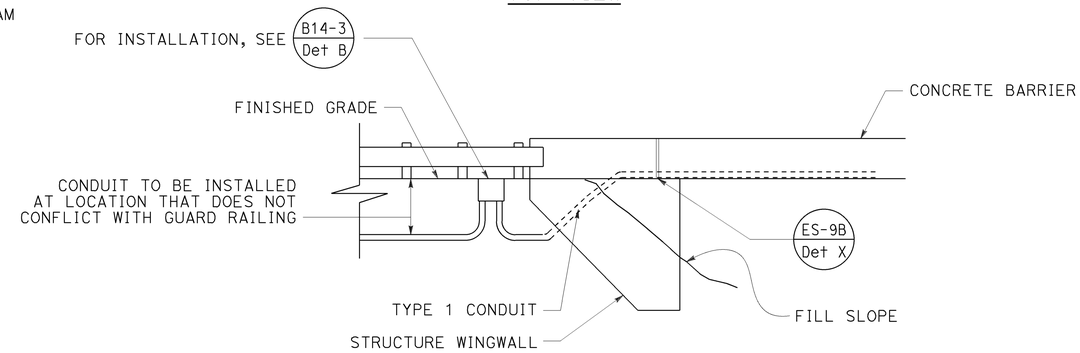

SIDE VIEW

CONDUIT TERMINATION
DETAIL I

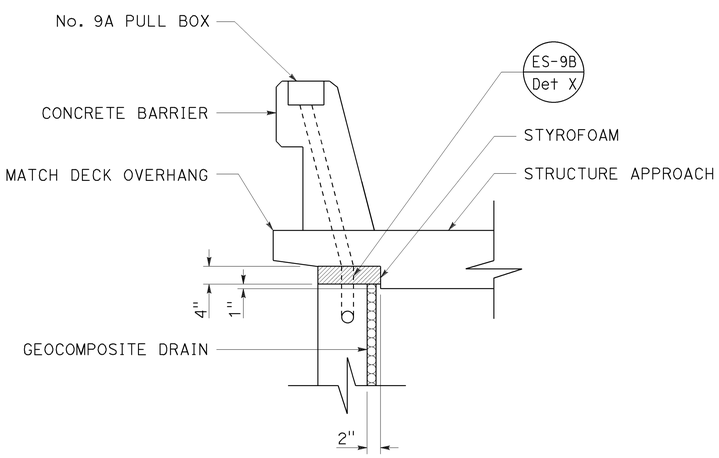

SECTION A-A

CONDUIT TERMINATION
DETAIL A

1 **ADDED PER ADDENDUM No. 1 DATED JANUARY 19, 2016**

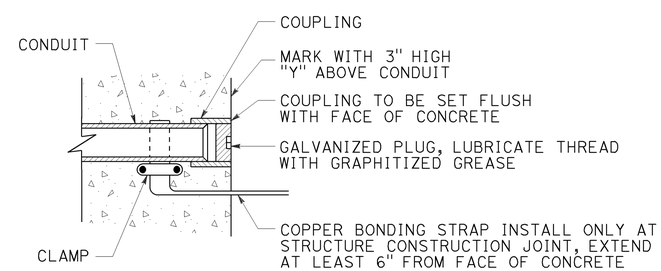

CONDUIT TERMINATION
DETAIL C

STATE OF CALIFORNIA
DEPARTMENT OF TRANSPORTATION

ELECTRICAL SYSTEMS (STRUCTURE PULL BOX INSTALLATIONS)

NO SCALE

RSP ES-9A DATED OCTOBER 30, 2015 SUPERSEDES STANDARD PLAN ES-9A DATED MAY 20, 2011 - PAGE 481 OF THE STANDARD PLANS BOOK DATED 2010.

REVISED STANDARD PLAN RSP ES-9A

2010 REVISED STANDARD PLAN RSP ES-9A

8-20-15

Dist	COUNTY	ROUTE	POST MILES TOTAL PROJECT	SHEET No.	TOTAL SHEETS
04	Ala	13	8.3	68A	108

1

REGISTERED CIVIL ENGINEER

July 19, 2013
PLANS APPROVAL DATE

REGISTERED PROFESSIONAL ENGINEER
Stanley P. Johnson
No. C57793
Exp. 3-31-14
CIVIL
STATE OF CALIFORNIA

THE STATE OF CALIFORNIA OR ITS OFFICERS OR AGENTS SHALL NOT BE RESPONSIBLE FOR THE ACCURACY OR COMPLETENESS OF SCANNED COPIES OF THIS PLAN SHEET.

TO ACCOMPANY PLANS DATED 10-19-15

STANDARD TYPE	SETBACK (DIMENSION A)
32	30'-0" (Min)
31	20'-0" (Min)
15, 15D, 15-SB, 21, 21D, 30	ARM LENGTH (Min)

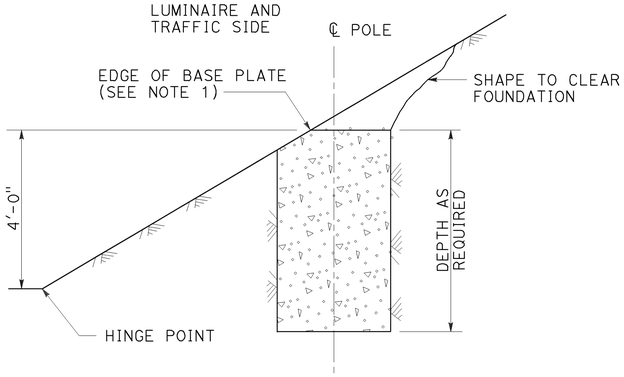

CUT SLOPES
STEEPER THAN 4:1,
LESS THAN 2:1
DETAIL A-1
See Note 2 and 3

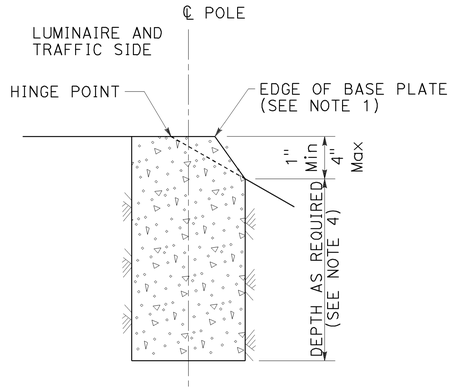

FILL SLOPES
STEEPER THAN 4:1,
LESS THAN 2:1
DETAIL A-2
See Note 2 and 3

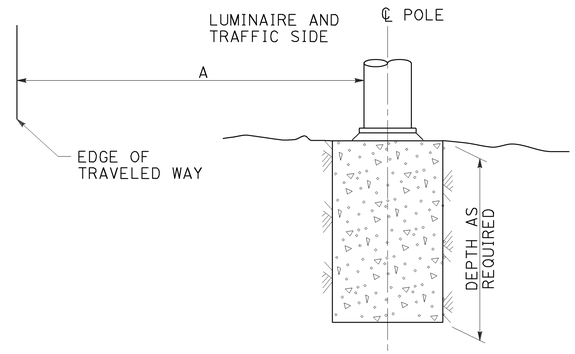

FLAT SECTIONS, CUT OR FILL SLOPES
4:1 OR FLATTER
DETAIL A-3
See Note 2

FOUNDATIONS ADJACENT TO ALL ROADWAYS EXCEPT
IN SIDEWALK, MEDIAN AND ISLAND AREAS
DETAIL A

NOTES:

1. Where a portion of the foundation is above grade, the top edges shall have a 1" chamfer.
2. Slopes shall be horizontal to vertical ratio (Horizontal : Vertical).
3. Horizontal setbacks on cut and fill slopes steeper than 4:1 shall not exceed the distance shown for flat sections.
4. CIDH embedment depth shall be increased beyond standard depths by the diameter of the CIDH.

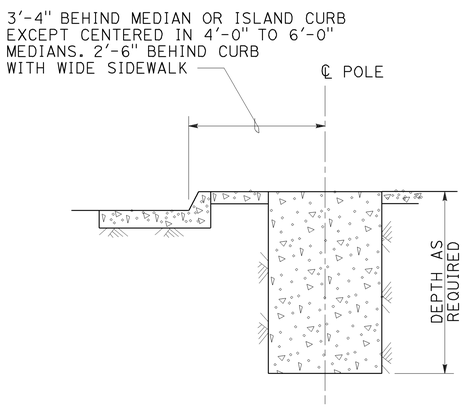

MEDIAN, ISLAND
OR WIDE SIDEWALK
DETAIL B-1
7' Wide and wider

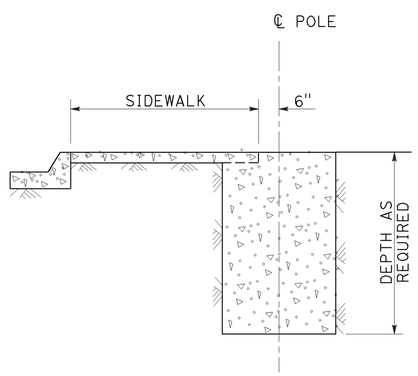

NARROW SIDEWALK
DETAIL B-2
Less than 7' wide

FOUNDATIONS IN SIDEWALK, MEDIAN AND ISLAND AREAS
DETAIL B

1 **ADDED PER ADDENDUM No. 1 DATED JANUARY 19, 2016**

STATE OF CALIFORNIA
DEPARTMENT OF TRANSPORTATION

ELECTRICAL SYSTEMS (FOUNDATION INSTALLATIONS)

NO SCALE

RSP ES-11 DATED JULY 19, 2013 SUPERSEDES STANDARD PLAN ES-11
DATED MAY 20, 2011 - PAGE 488 OF THE STANDARD PLANS BOOK DATED 2010.

REVISED STANDARD PLAN RSP ES-11

2010 REVISED STANDARD PLAN RSP ES-11

7-9-13

DIST	COUNTY	ROUTE	POST MILES TOTAL PROJECT	SHEET No.	TOTAL SHEETS
04	Ala	13	8.3	77	108

REGISTERED CIVIL ENGINEER — DATE 7-23-15

PLANS APPROVAL DATE 10-19-15

REGISTERED PROFESSIONAL ENGINEER PAO-TSAN WANG No. 32308 Exp. 12-31-16 CIVIL STATE OF CALIFORNIA

The State of California or its officers or agents shall not be responsible for the accuracy or completeness of electronic copies of this plan sheet.

GENERAL NOTES

DESIGN:

AASHTO LRFD Bridge Design Specifications, 4th Edition with California Amendments.

PRESTRESSING STEEL:

Bars - ASTM Designation: A722 Type II (150 ksi)

Strand Tendons-ASTM Designation: A416 (270 Ksi Low Relaxation steel)

FTL = Factored Test Load per anchor (Kips)

fpu = Minimum tensile strength of prestressing steel

As = Minimum cross sectional area of prestressing steel in ground anchor (square inch)

$As(Min) = \frac{1.0\ FTL}{0.75\ fpu}$ (Strands)

$As(Min) = \frac{1.0\ FTL}{0.80\ fpu}$ (Bars)

NOTES:

(A) Level of initial grouting for drilled hole 6" in diameter or smaller

(B) Level of secondary grouting

(C) Level of initial grouting inside corrugated sheathing

(D) Bonded length shall be determined by the contractor

1 (E) Unbonded length = 40'-0" Min.

(F) For inclination, see PROJECT PLANS

(G) Face of Wall Excavation

NOTES:

1. Anchorage enclosure shall only be used when anchor head assembly is not enclosed in concrete.
2. Anchorage enclosure shall have provisions to allow injecting grout at low end and venting at high end. Galvanize after fabrication.
3. Silicone sealant to cover full width of flange.
4. Steel tube (Min thickness = 1/4") welded to bearing plate. Galvanize assembly after fabrication
5. Steel tube welded to bearing plate. Inside diameter of steel tube (Min thickness = 1/4") to be 1" greater than outside diameter of smooth sheathing.
6. Galvanize assembly after fabrication.
7. For other wall details, see PROJECT PLANS.

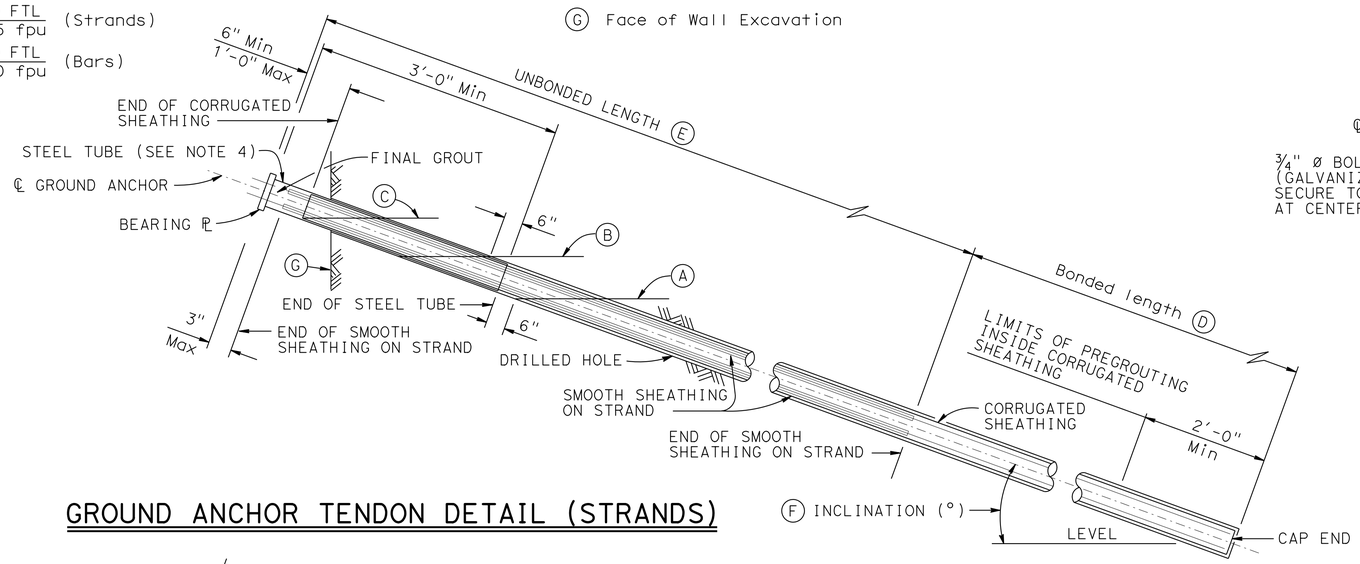

GROUND ANCHOR TENDON DETAIL (STRANDS)

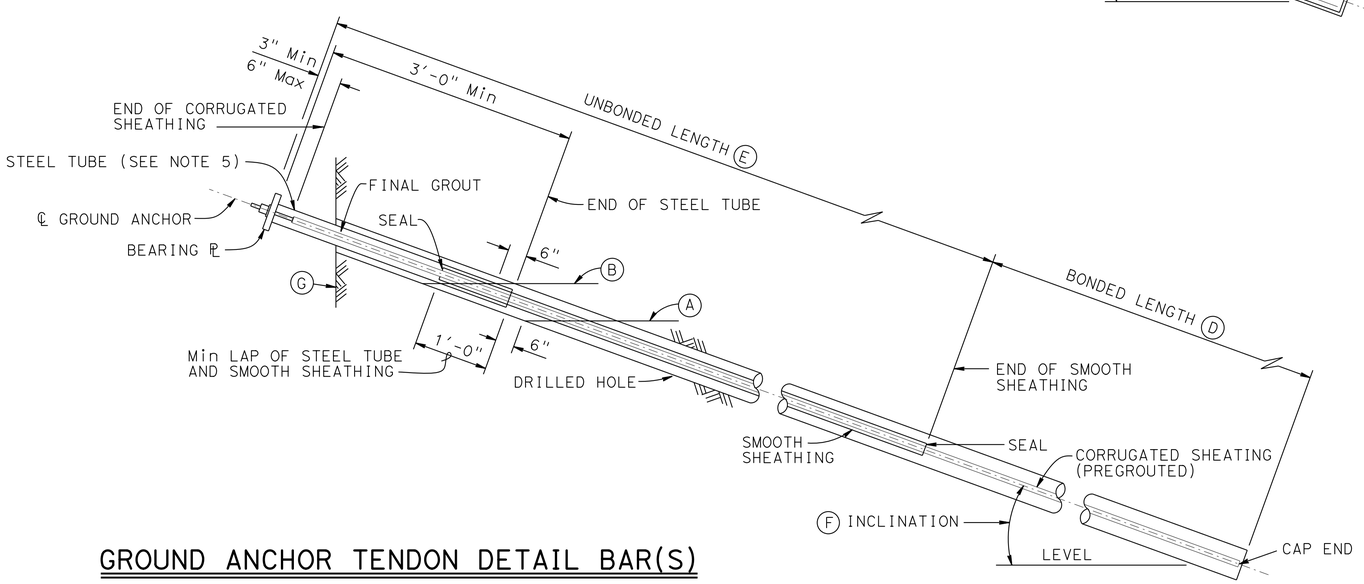

GROUND ANCHOR TENDON DETAIL BAR(S)

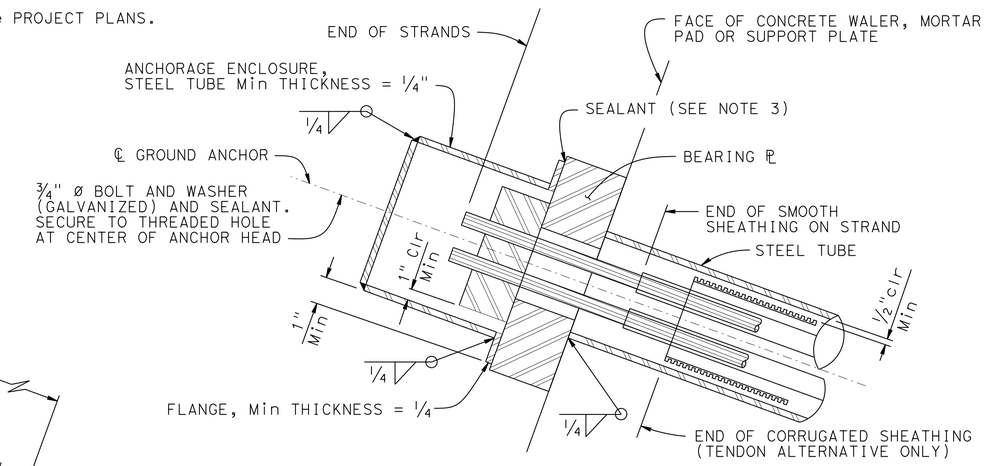

ALTERNATIVE X

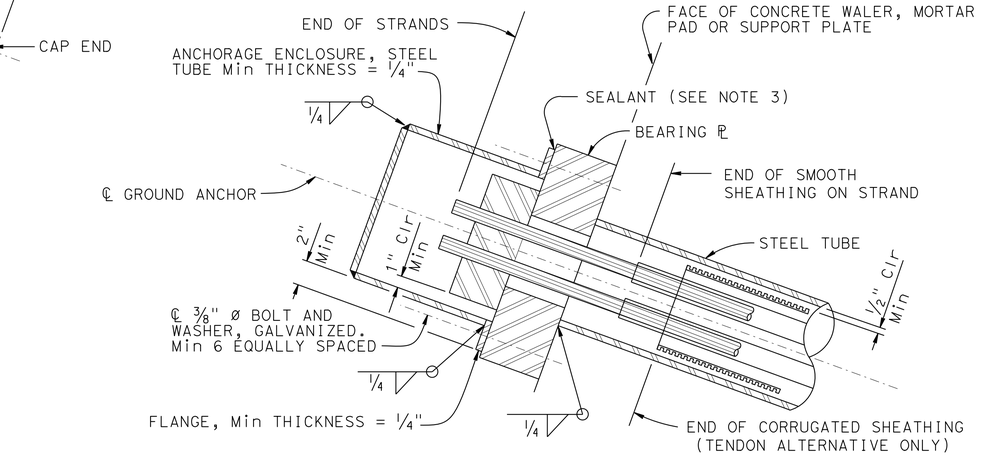

ALTERNATIVE Y

ANCHORAGE ENCLOSURE DETAILS

1 **REPLACED PER ADDENDUM No. 1 DATED JANUARY 19, 2016**

NO SCALE

DESIGN	BY Pao-Tsan Wang	CHECKED Sam Kotalawala	
DETAILS	BY Franklin Maagma	CHECKED Sam Kotalawala	
QUANTITIES	BY Sam Kotalawala	CHECKED Pao-Tsan Wang	

STATE OF CALIFORNIA DEPARTMENT OF TRANSPORTATION

DIVISION OF ENGINEERING SERVICES STRUCTURE DESIGN DESIGN BRANCH 16

BRIDGE NO. 33E0140

POST MILE 8.3

THORNHILL DRIVE STORM DAMAGE REPAIR

SOLDIER PILE WALL WITH GROUND ANCHORS

GROUND ANCHOR DETAILS

STRUCTURES DESIGN DETAIL SHEET (ENGLISH) (REV. 09-01-10)

ORIGINAL SCALE IN INCHES FOR REDUCED PLANS 0 1 2 3

UNIT: 3617

PROJECT NUMBER & PHASE: 04000208681

CONTRACT NO.: 04-1SS024

DISREGARD PRINTS BEARING EARLIER REVISION DATES

REVISION DATES 2-24-14 02-26-14 7-15-15

SHEET 9 OF 16

FILE => 33e0140-g-rwdt04.dgn

USERNAME => s128849 DATE PLOTTED => 15-JAN-2016 TIME PLOTTED => 10:43