Dist	COUNTY	ROUTE	POST MILES TOTAL PROJECT	SHEET No.	TOTAL SHEETS
03	Pla	89	T8.6/12.8	1	77

ACSTP-P089(108)E

STATE OF CALIFORNIA
DEPARTMENT OF TRANSPORTATION

PROJECT PLANS FOR CONSTRUCTION ON
STATE HIGHWAY

IN PLACER COUNTY
AT AND NEAR TAHOE CITY
FROM JUNCTION ROUTE 89/28
TO 0.5 MILE NORTH OF ALPINE MEADOWS ROAD

TO BE SUPPLEMENTED BY STANDARD PLANS DATED 2010

INDEX OF PLANS

SHEET No.	DESCRIPTION
1	TITLE AND LOCATION MAP
2-10	TYPICAL CROSS SECTIONS
11-24	LAYOUTS
25	SUPERELEVATION DIAGRAMS
26-27	CONSTRUCTION DETAILS
28	TEMPORARY WATER POLLUTION CONTROL DETAILS
29-45	DRAINAGE PROFILES, DETAILS AND QUANTITIES
46	CONSTRUCTION AREA SIGNS
47-49	STAGE CONSTRUCTION PLANS
50-63	PAVEMENT DELINEATION PLANS AND QUANTITIES
64	SUMMARY OF QUANTITIES
65-66	EROSION CONTROL DETAILS
67-77	REVISED AND NEW STANDARD PLANS

THE STANDARD PLANS LIST APPLICABLE TO THIS CONTRACT IS INCLUDED IN THE NOTICE TO BIDDERS AND SPECIAL PROVISIONS BOOK.

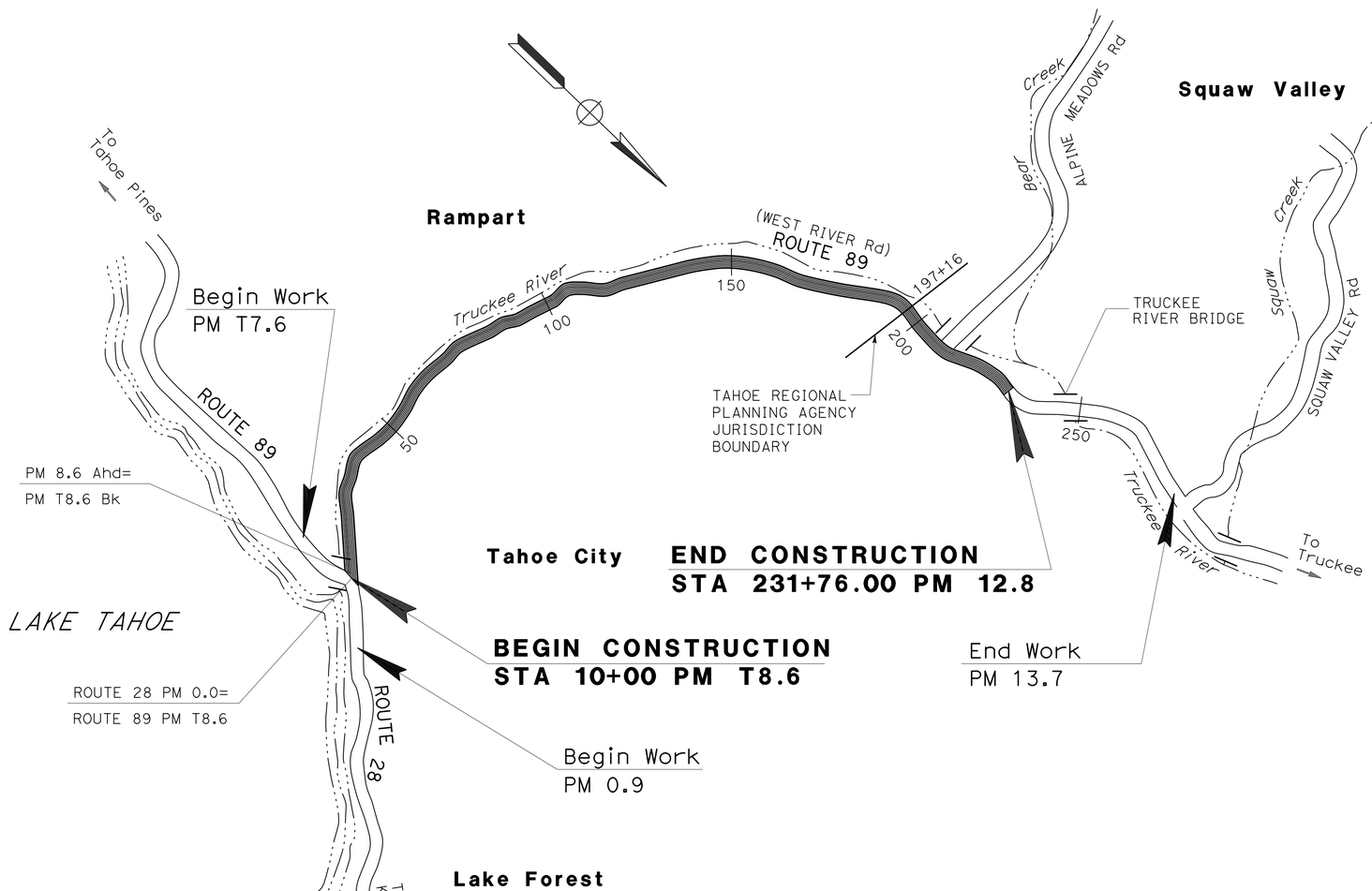

NO SCALE

LOCATION MAP

THE CONTRACTOR SHALL POSSESS THE CLASS (OR CLASSES) OF LICENSE AS SPECIFIED IN THE "NOTICE TO BIDDERS."

PROJECT MANAGER: MIKE BARTLETT
DESIGN ENGINEER: KEN KEATON

Kevin F. Lee 10-7-13
PROJECT ENGINEER DATE
REGISTERED CIVIL ENGINEER

REGISTERED PROFESSIONAL ENGINEER
KEVIN F. LEE
No. 78077
Exp. 09-30-13
CIVIL
STATE OF CALIFORNIA

October 7, 2013
PLANS APPROVAL DATE

THE STATE OF CALIFORNIA OR ITS OFFICERS OR AGENTS SHALL NOT BE RESPONSIBLE FOR THE ACCURACY OR COMPLETENESS OF SCANNED COPIES OF THIS PLAN SHEET.

CONTRACT No.	03-3F4404
PROJECT ID	0312000295

LAST REVISION 09-27-13
DATE PLOTTED => 09-OCT-2013
TIME PLOTTED => 12:45

Dist	COUNTY	ROUTE	POST MILES TOTAL PROJECT	SHEET No.	TOTAL SHEETS
03	Pla	89	T8.6/12.8	2	77

REGISTERED CIVIL ENGINEER 10-7-13 DATE

10-7-13
PLANS APPROVAL DATE

REGISTERED PROFESSIONAL ENGINEER KEVIN F. LEE No. 78077 Exp. 9-30-13 CIVIL STATE OF CALIFORNIA

THE STATE OF CALIFORNIA OR ITS OFFICERS OR AGENTS SHALL NOT BE RESPONSIBLE FOR THE ACCURACY OR COMPLETENESS OF SCANNED COPIES OF THIS PLAN SHEET.

NOTES:

1. DIMENSIONS OF THE PAVEMENT STRUCTURES (STRUCTURAL SECTIONS) ARE SUBJECT TO TOLERANCES SPECIFIED IN THE STANDARD SPECIFICATIONS.
2. SUPERELEVATIONS ARE SHOWN ON THE SUPERELEVATION DIAGRAMS.

* REPLACE CONCRETE CURB

ABBREVIATIONS:

RBRK-ROAD BREAK
SDRN-STORM DRAIN
VG-VALLEY GUTTER

DESIGN DESIGNATION

ADT (2014)	11,400	D	65%
ADT (2034)	14,700	T	5%
DHV	1,600	V	45 mph
ESAL	362,171	TI_{20}	9.5

PAVEMENT CLIMATE REGION: HIGH MOUNTAIN

LEGEND:

1 — 0.15′ HMA (TYPE A)

2 — 0.15′-0.30′ HMA (TYPE A)
COLD PLANE AC Pvmt (0.38′ Max)

3 — 0.50′ HMA (TYPE A)
1.00′ Cl 2 AB

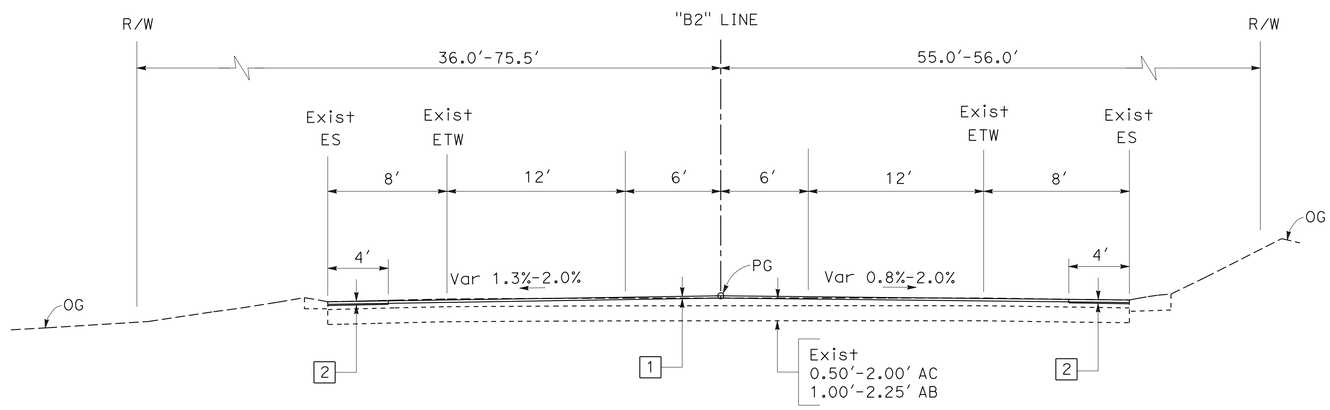

Sta "B2" 19+35.62 TO Sta "B2" 24+00.00

ROUTE 89

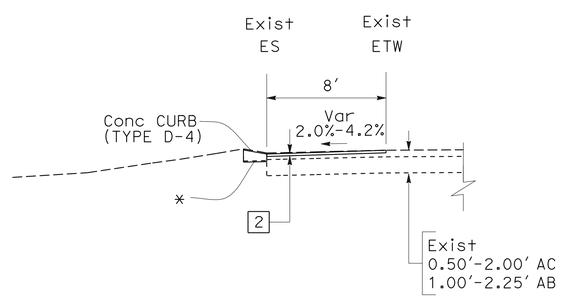

* Sta "B2" 18+65.00 TO Sta "B2"19+35.62
Sta "B2" 17+79.42 TO Sta "B2" 19+35.62

TYPICAL CROSS SECTIONS

NO SCALE

X-1

REVISED BY | DATE REVISED
LITTON WANG | KEVIN LEE
CALCULATED-DESIGNED BY | CHECKED BY
FUNCTIONAL SUPERVISOR | KEN KEATON

STATE OF CALIFORNIA - DEPARTMENT OF TRANSPORTATION
Caltrans
NORTH REGION
DIVISION OF ENGINEERING

LAST REVISION 00-00-00 | DATE PLOTTED => 09-OCT-2013 | TIME PLOTTED => 12:45

Dist	COUNTY	ROUTE	POST MILES TOTAL PROJECT	SHEET No.	TOTAL SHEETS
03	Pla	89	T8.6/12.8	3	77

REGISTERED CIVIL ENGINEER 10-7-13 DATE

10-7-13
PLANS APPROVAL DATE

REGISTERED PROFESSIONAL ENGINEER KEVIN F. LEE No. 78077 Exp. 9-30-13 CIVIL STATE OF CALIFORNIA

THE STATE OF CALIFORNIA OR ITS OFFICERS OR AGENTS SHALL NOT BE RESPONSIBLE FOR THE ACCURACY OR COMPLETENESS OF SCANNED COPIES OF THIS PLAN SHEET.

* REMOVE CONCRETE CURB

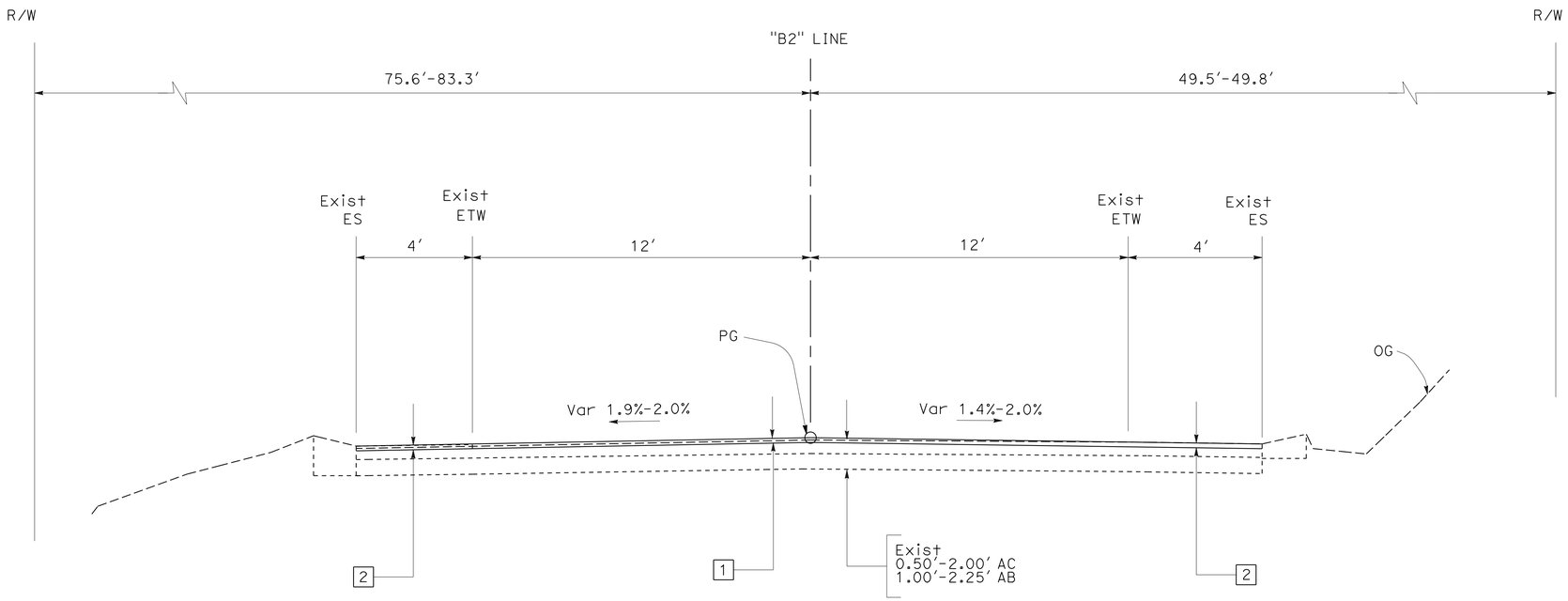

Sta "B2" 50+00.00 TO Sta "B2" 54+10.00

ROUTE 89

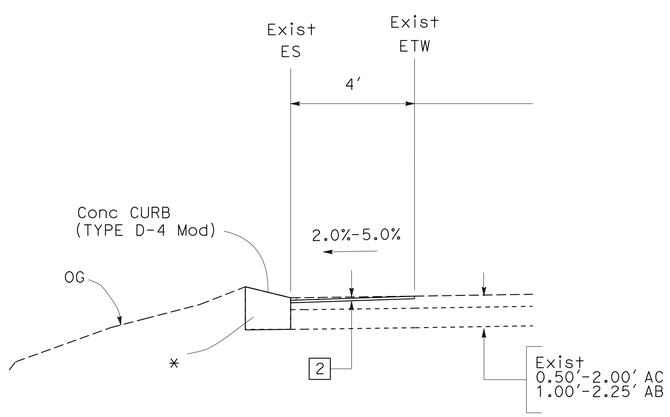

* Sta "B2" 49+50.00 TO Sta "B2" 50+50.00
Sta "B2" 49+21.88 TO Sta "B2" 50+00.00

ROUTE 89

TYPICAL CROSS SECTIONS

NO SCALE

X-2

STATE OF CALIFORNIA - DEPARTMENT OF TRANSPORTATION
Caltrans
NORTH REGION
DIVISION OF ENGINEERING

FUNCTIONAL SUPERVISOR: KEN KEATON

CALCULATED-DESIGNED BY: LITTON WANG
CHECKED BY: KEVIN LEE

REVISED BY | DATE REVISED

LAST REVISION 00-00-00 | DATE PLOTTED => 09-OCT-2013 | TIME PLOTTED => 12:45

Dist	COUNTY	ROUTE	POST MILES TOTAL PROJECT	SHEET No.	TOTAL SHEETS
03	Pla	89	T8.6/12.8	4	77

REGISTERED CIVIL ENGINEER 10-7-13 DATE

10-7-13
PLANS APPROVAL DATE

REGISTERED PROFESSIONAL ENGINEER KEVIN F. LEE No. 78077 Exp. 9-30-13 CIVIL STATE OF CALIFORNIA

THE STATE OF CALIFORNIA OR ITS OFFICERS OR AGENTS SHALL NOT BE RESPONSIBLE FOR THE ACCURACY OR COMPLETENESS OF SCANNED COPIES OF THIS PLAN SHEET.

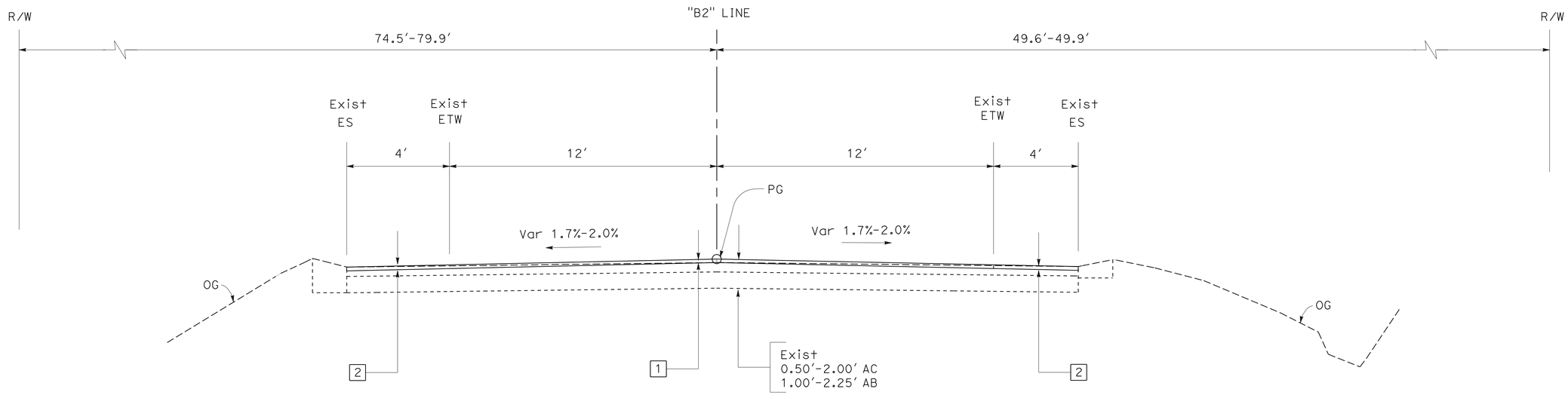

Sta "B2" 69+00.00 TO Sta "B2" 72+49.92

ROUTE 89

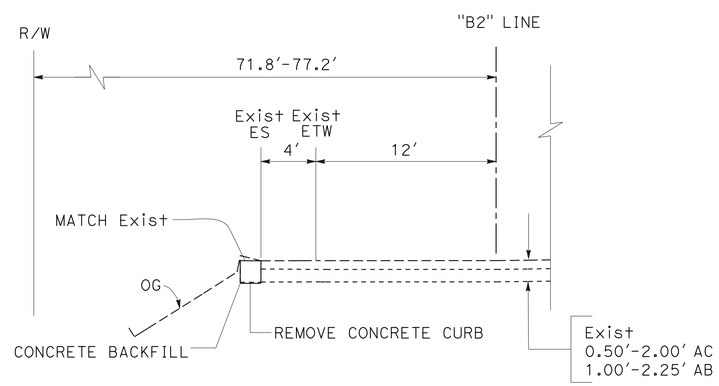

Sta "B2" 65+60.00 TO Sta "B2" 67+54.00
Sta "B2" 54+20.00 TO Sta "B2" 56+20.00

ROUTE 89

TYPICAL CROSS SECTIONS

NO SCALE

X-3

STATE OF CALIFORNIA - DEPARTMENT OF TRANSPORTATION
Caltrans
NORTH REGION
DIVISION OF ENGINEERING

FUNCTIONAL SUPERVISOR: KEN KEATON

CALCULATED-DESIGNED BY: LITTON WANG
CHECKED BY: KEVIN LEE

REVISED BY | DATE REVISED

LAST REVISION 00-00-00 | DATE PLOTTED => 09-OCT-2013 | TIME PLOTTED => 12:45

Dist	COUNTY	ROUTE	POST MILES TOTAL PROJECT	SHEET No.	TOTAL SHEETS
03	Pla	89	T8.6/12.8	5	77

REGISTERED CIVIL ENGINEER 10-7-13 DATE

10-7-13
PLANS APPROVAL DATE

REGISTERED PROFESSIONAL ENGINEER KEVIN F. LEE No. 78077 Exp. 9-30-13 CIVIL STATE OF CALIFORNIA

THE STATE OF CALIFORNIA OR ITS OFFICERS OR AGENTS SHALL NOT BE RESPONSIBLE FOR THE ACCURACY OR COMPLETENESS OF SCANNED COPIES OF THIS PLAN SHEET.

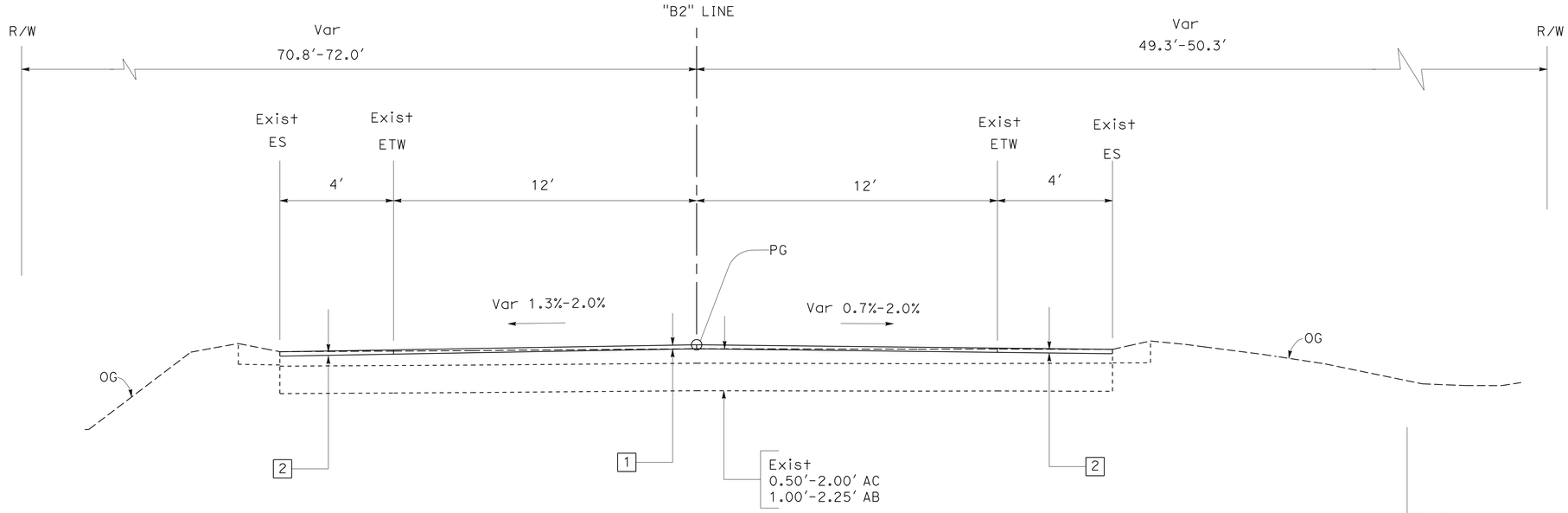

Sta "B2" 104+60.63 TO Sta "B2" 107+31.00

ROUTE 89

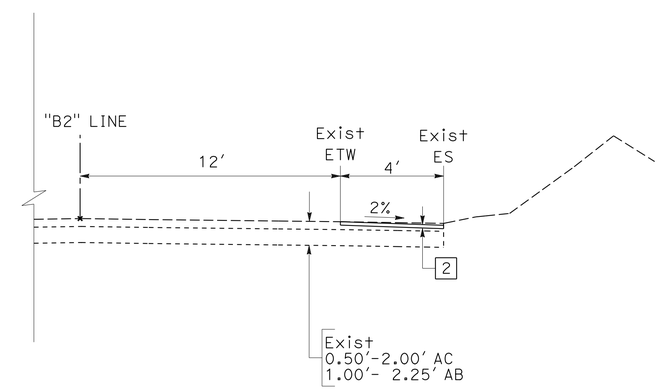

Sta "B2" 92+24.79 TO Sta "B2" 92+70.00
Sta "B2" 89+75.00 TO Sta "B2" 91+22.52

ROUTE 89

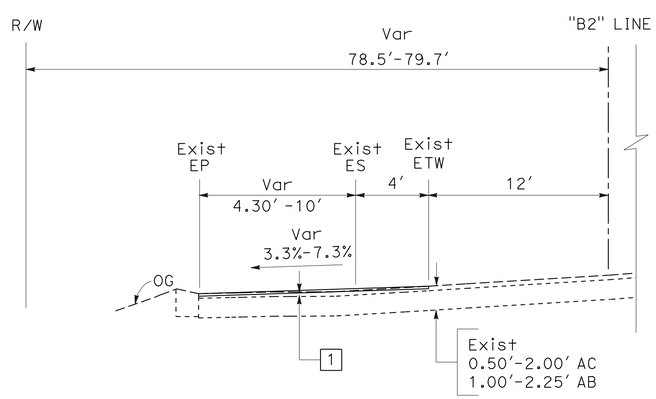

Sta "B2" 84+21.71 TO Sta "B2" 85+07.91

ROUTE 89

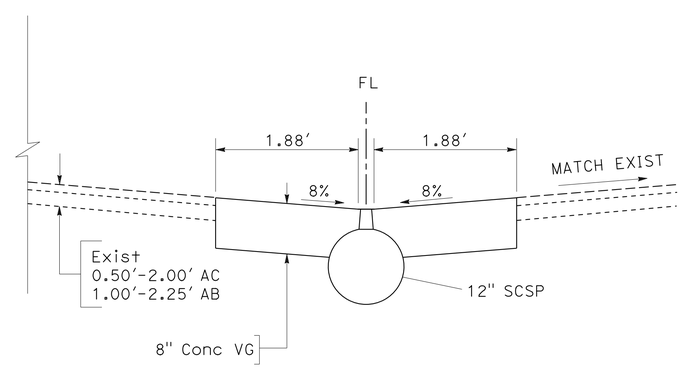

Sta "B2" 91+22.52 TO Sta "B2" 92+24.79

ROUTE 89

TYPICAL CROSS SECTIONS

NO SCALE

X-4

STATE OF CALIFORNIA - DEPARTMENT OF TRANSPORTATION
Caltrans®
NORTH REGION
DIVISION OF ENGINEERING

FUNCTIONAL SUPERVISOR: KEN KEATON
CALCULATED-DESIGNED BY: LITTON WANG
CHECKED BY: KEVIN LEE
REVISED BY
DATE REVISED

LAST REVISION 00-00-00
DATE PLOTTED => 09-OCT-2013
TIME PLOTTED => 12:45

Dist	COUNTY	ROUTE	POST MILES TOTAL PROJECT	SHEET No.	TOTAL SHEETS
03	Pla	89	T8.6/12.8	6	77

REGISTERED CIVIL ENGINEER 10-7-13 DATE

10-7-13
PLANS APPROVAL DATE

REGISTERED PROFESSIONAL ENGINEER KEVIN F. LEE No. 78077 Exp. 9-30-13 CIVIL STATE OF CALIFORNIA

THE STATE OF CALIFORNIA OR ITS OFFICERS OR AGENTS SHALL NOT BE RESPONSIBLE FOR THE ACCURACY OR COMPLETENESS OF SCANNED COPIES OF THIS PLAN SHEET.

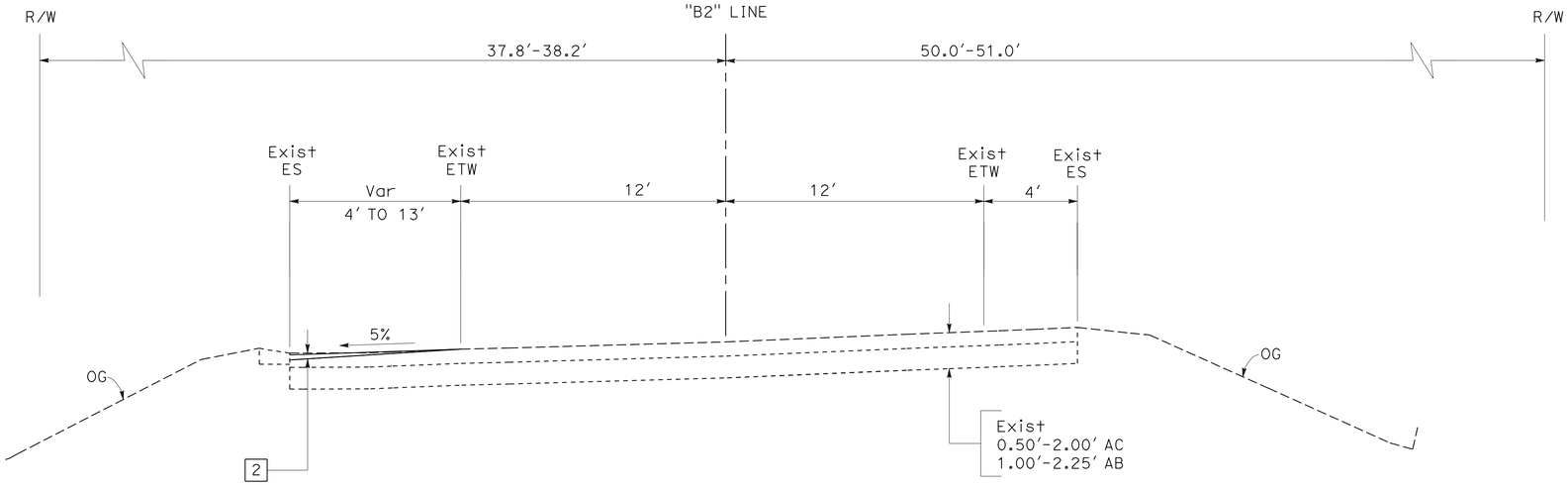

Sta "B2" 116+41.35 TO Sta "B2" 117+68.61

ROUTE 89

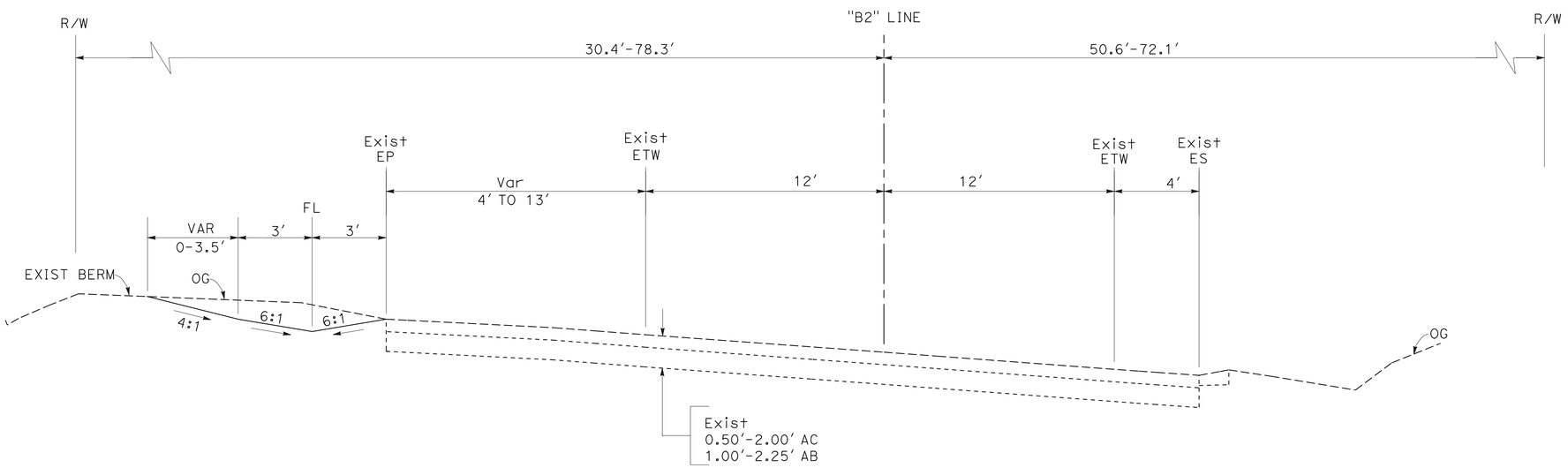

Sta "B2" 111+65.06 TO Sta "B2" 113+68.75
Sta "B2" 109+60.00 TO Sta "B2" 111+21.73

ROUTE 89

TYPICAL CROSS SECTIONS

NO SCALE

X-5

STATE OF CALIFORNIA - DEPARTMENT OF TRANSPORTATION
Caltrans
NORTH REGION DIVISION OF ENGINEERING

FUNCTIONAL SUPERVISOR: KEN KEATON

CALCULATED-DESIGNED BY: LITTON WANG
CHECKED BY: KEVIN LEE

REVISED BY | DATE REVISED

LAST REVISION 00-00-00 | DATE PLOTTED => 09-OCT-2013 | TIME PLOTTED => 12:45

Dist	COUNTY	ROUTE	POST MILES TOTAL PROJECT	SHEET No.	TOTAL SHEETS
03	Pla	89	T8.6/12.8	7	77

REGISTERED CIVIL ENGINEER 10-7-13 DATE

10-7-13
PLANS APPROVAL DATE

REGISTERED PROFESSIONAL ENGINEER KEVIN F. LEE No. 78077 Exp. 9-30-13 CIVIL STATE OF CALIFORNIA

THE STATE OF CALIFORNIA OR ITS OFFICERS OR AGENTS SHALL NOT BE RESPONSIBLE FOR THE ACCURACY OR COMPLETENESS OF SCANNED COPIES OF THIS PLAN SHEET.

* REMOVE CONCRETE CURB

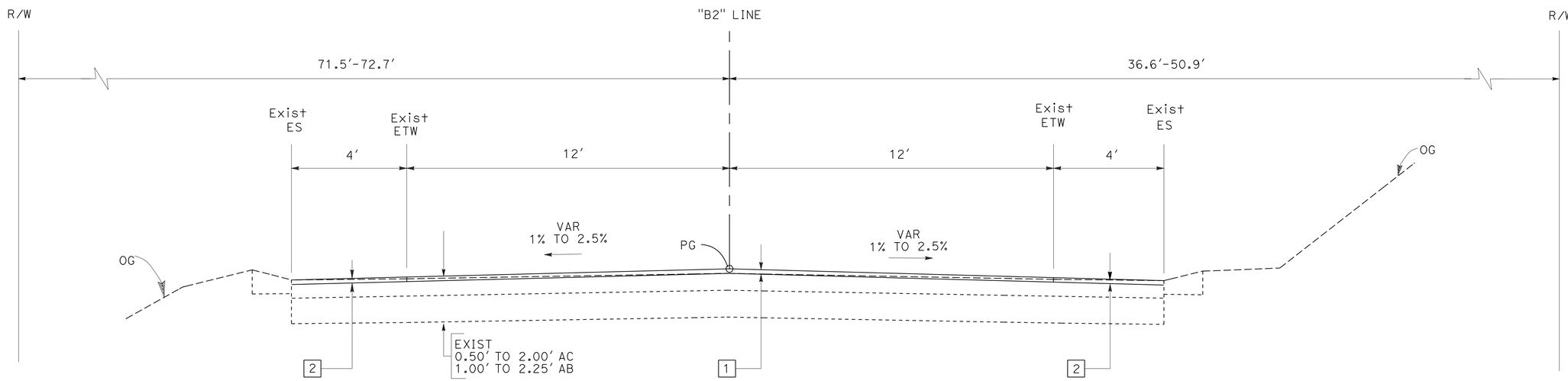

Sta "B2" 138+49.69 TO Sta "B2" 142+00.00

ROUTE 89

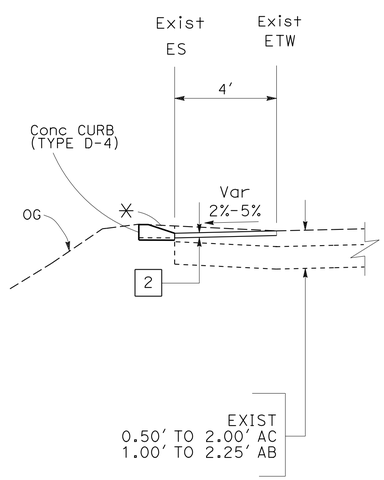

Sta "B2" 132+49.72 TO Sta "B2" 133+34.28
* Sta "B2" 131+69.24 TO Sta "B2" 133+34.28

ROUTE 89

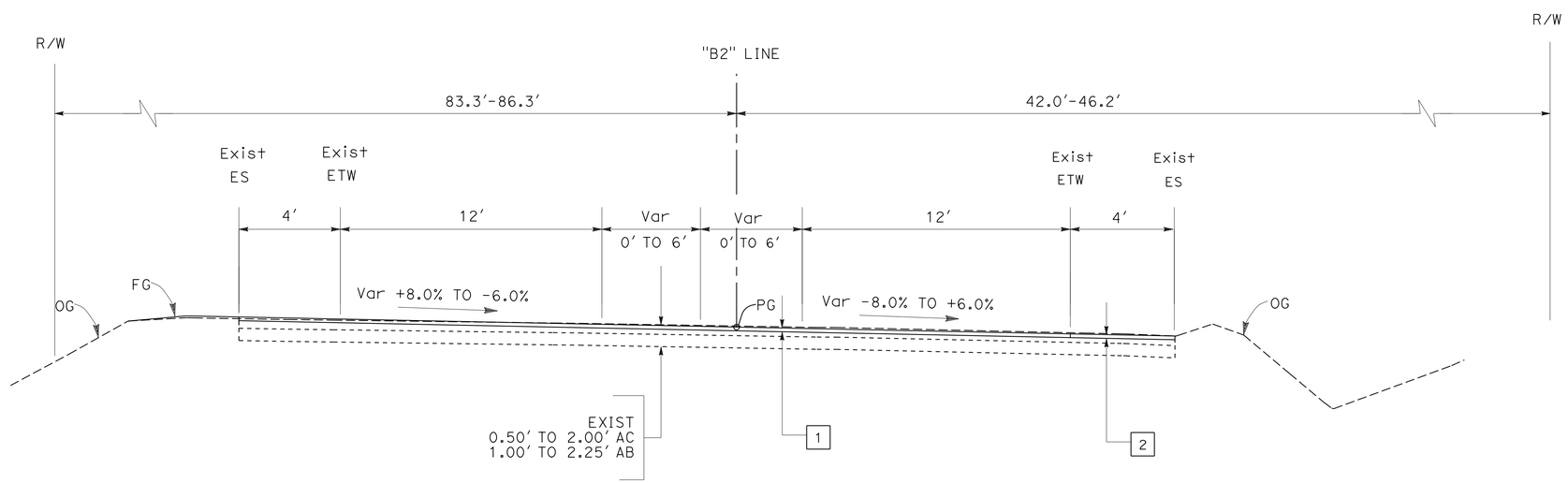

Sta "B2" 130+74.57 TO Sta "B2" 132+49.72

ROUTE 89

TYPICAL CROSS SECTIONS

NO SCALE

X-6

STATE OF CALIFORNIA - DEPARTMENT OF TRANSPORTATION
Caltrans
NORTH REGION
DIVISION OF ENGINEERING

FUNCTIONAL SUPERVISOR: KEN KEATON
CALCULATED-DESIGNED BY: LITTON WANG
CHECKED BY: KEVIN LEE
REVISED BY
DATE REVISED

LAST REVISION 00-00-00
DATE PLOTTED => 09-OCT-2013
TIME PLOTTED => 12:45

Dist	COUNTY	ROUTE	POST MILES TOTAL PROJECT	SHEET No.	TOTAL SHEETS
03	Pla	89	T8.6/12.8	8	77

REGISTERED CIVIL ENGINEER 10-7-13 DATE

10-7-13
PLANS APPROVAL DATE

REGISTERED PROFESSIONAL ENGINEER KEVIN F. LEE No. 78077 Exp. 9-30-13 CIVIL STATE OF CALIFORNIA

THE STATE OF CALIFORNIA OR ITS OFFICERS OR AGENTS SHALL NOT BE RESPONSIBLE FOR THE ACCURACY OR COMPLETENESS OF SCANNED COPIES OF THIS PLAN SHEET.

* REMOVE CONCRETE CURB

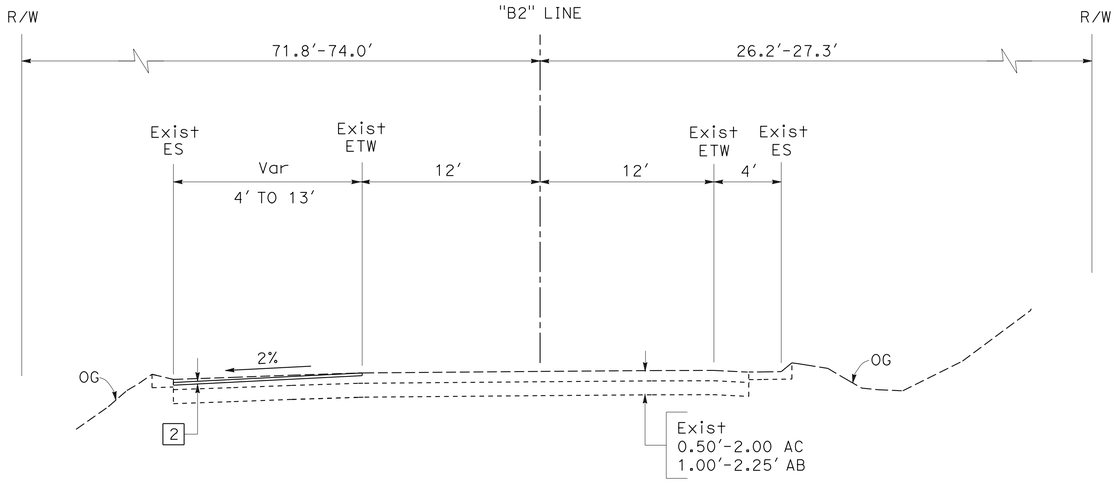

Sta "B2" 173+85.49 TO Sta "B2" 174+66.66

ROUTE 89

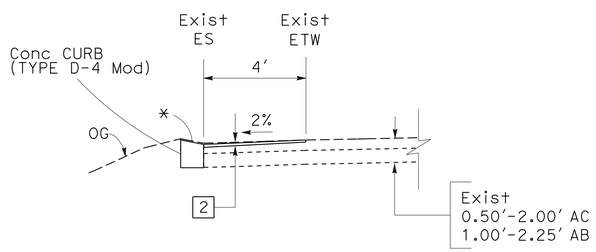

Sta "B2" 164+00.00 TO Sta "B2" 166+49.70

ROUTE 89

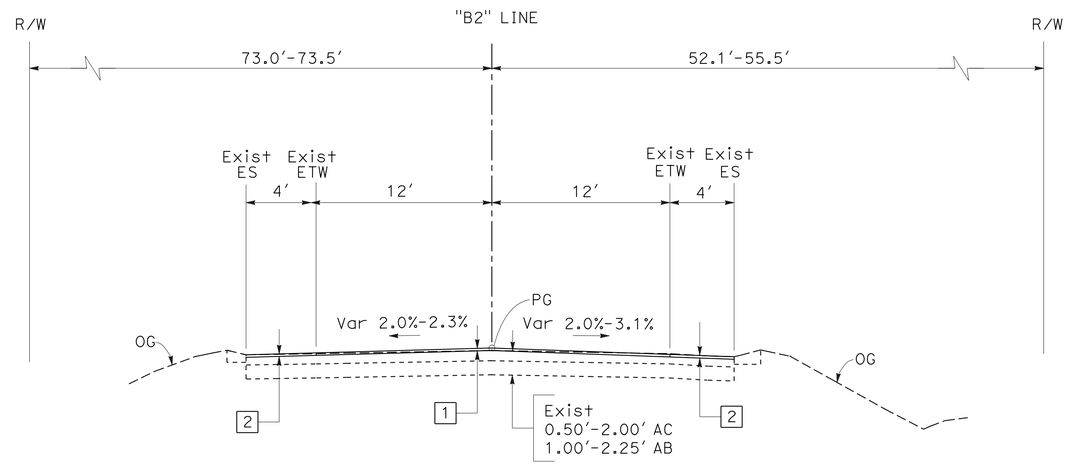

Sta "B2" 149+49.58 TO Sta "B2" 155+49.76

ROUTE 89

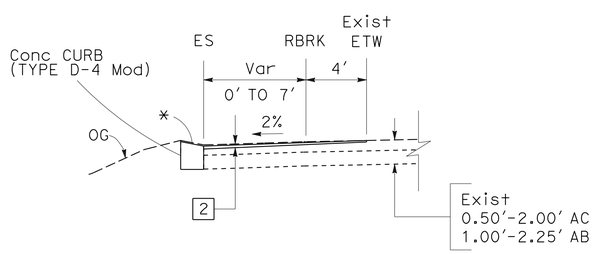

Sta "B2" 159+12.82 TO Sta "B2" 160+26.12

ROUTE 89

TYPICAL CROSS SECTIONS

NO SCALE

X-7

STATE OF CALIFORNIA - DEPARTMENT OF TRANSPORTATION
Caltrans
NORTH REGION
DIVISION OF ENGINEERING

FUNCTIONAL SUPERVISOR: KEN KEATON
CALCULATED-DESIGNED BY: LITTON WANG
CHECKED BY: KEVIN LEE
REVISED BY
DATE REVISED

LAST REVISION 00-00-00
DATE PLOTTED => 09-OCT-2013
TIME PLOTTED => 12:45

Dist	COUNTY	ROUTE	POST MILES TOTAL PROJECT	SHEET No.	TOTAL SHEETS
03	Pla	89	T8.6/12.8	9	77

REGISTERED CIVIL ENGINEER 10-7-13 DATE

10-7-13
PLANS APPROVAL DATE

REGISTERED PROFESSIONAL ENGINEER KEVIN F. LEE No. 78077 Exp. 9-30-13 CIVIL STATE OF CALIFORNIA

THE STATE OF CALIFORNIA OR ITS OFFICERS OR AGENTS SHALL NOT BE RESPONSIBLE FOR THE ACCURACY OR COMPLETENESS OF SCANNED COPIES OF THIS PLAN SHEET.

* REMOVE CONCRETE CURB

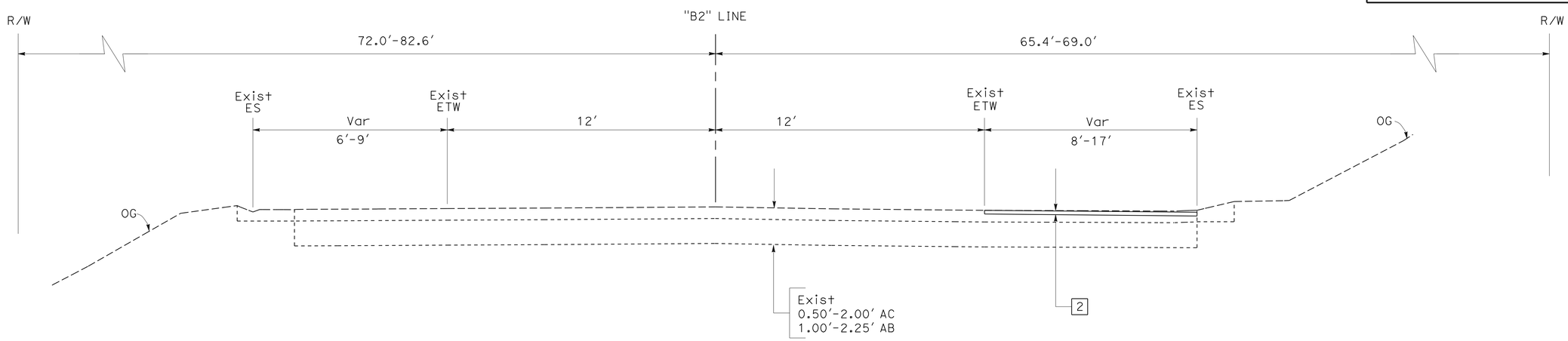

Sta "B2" 188+54.85 TO Sta "B2" 190+07.37

ROUTE 89

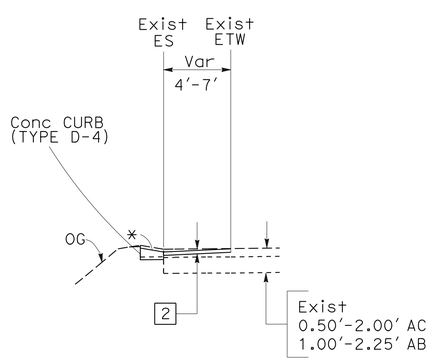

Sta "B2" 178+65.39 To Sta "B2" 179+15.39

ROUTE 89

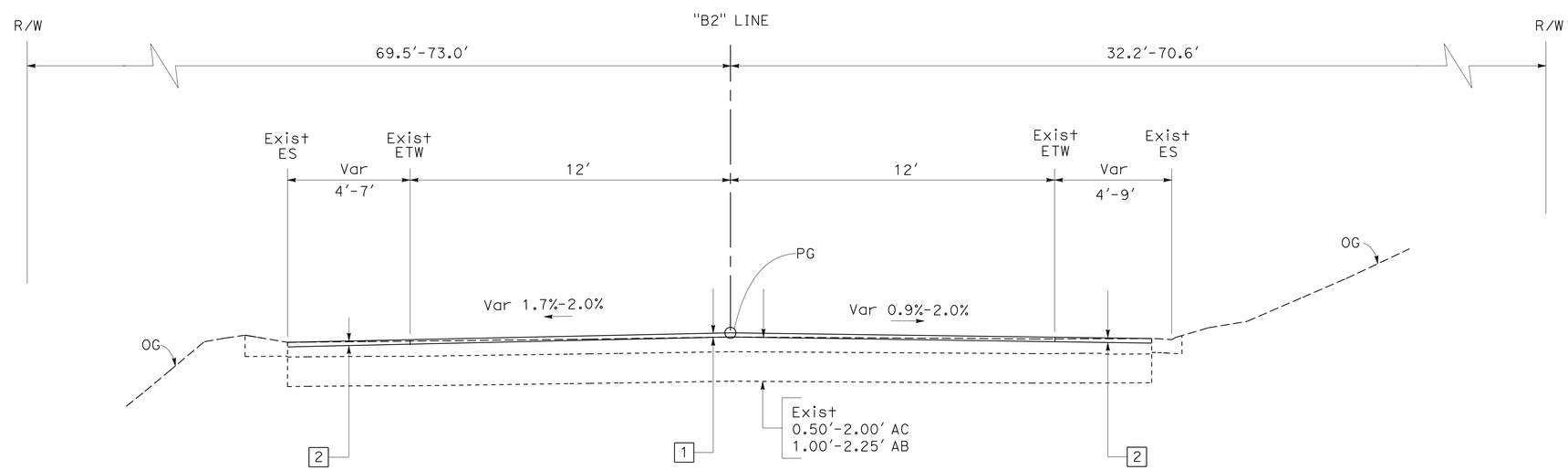

Sta "B2" 179+15.39 TO Sta "B2" 188+54.85

ROUTE 89

TYPICAL CROSS SECTIONS

NO SCALE

X-8

STATE OF CALIFORNIA - DEPARTMENT OF TRANSPORTATION
Caltrans
NORTH REGION
DIVISION OF ENGINEERING

FUNCTIONAL SUPERVISOR: KEN KEATON

CALCULATED-DESIGNED BY: LITTON WANG
CHECKED BY: KEVIN LEE

REVISED BY | DATE REVISED

LAST REVISION 00-00-00 | DATE PLOTTED => 09-OCT-2013 | TIME PLOTTED => 12:45

Dist	COUNTY	ROUTE	POST MILES TOTAL PROJECT	SHEET No.	TOTAL SHEETS
03	Pla	89	T8.6/12.8	10	77

REGISTERED CIVIL ENGINEER 10-7-13 DATE

10-7-13
PLANS APPROVAL DATE

REGISTERED PROFESSIONAL ENGINEER KEVIN F. LEE No. 78077 Exp. 9-30-13 CIVIL STATE OF CALIFORNIA

THE STATE OF CALIFORNIA OR ITS OFFICERS OR AGENTS SHALL NOT BE RESPONSIBLE FOR THE ACCURACY OR COMPLETENESS OF SCANNED COPIES OF THIS PLAN SHEET.

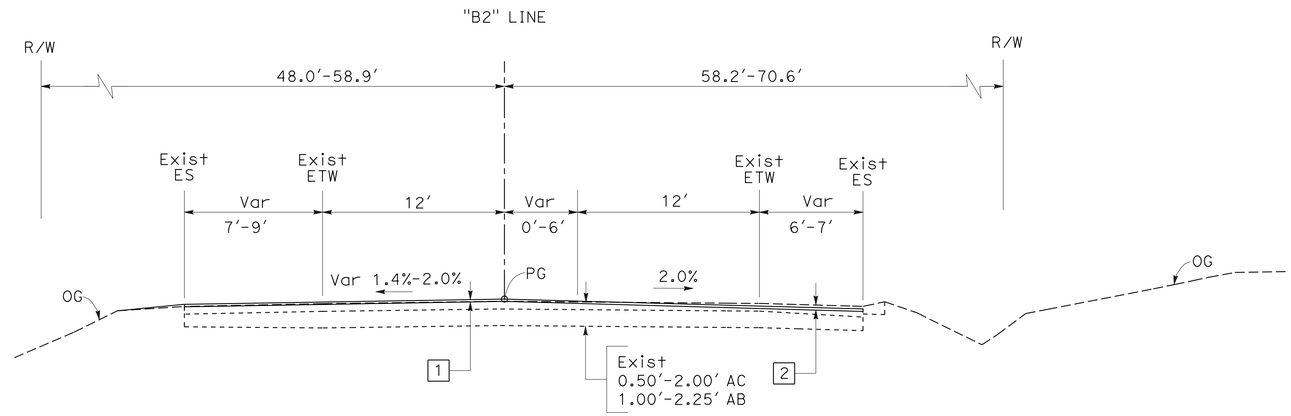

Sta "B2" 215+44.04 TO Sta "B2" 219+26.92

ROUTE 89

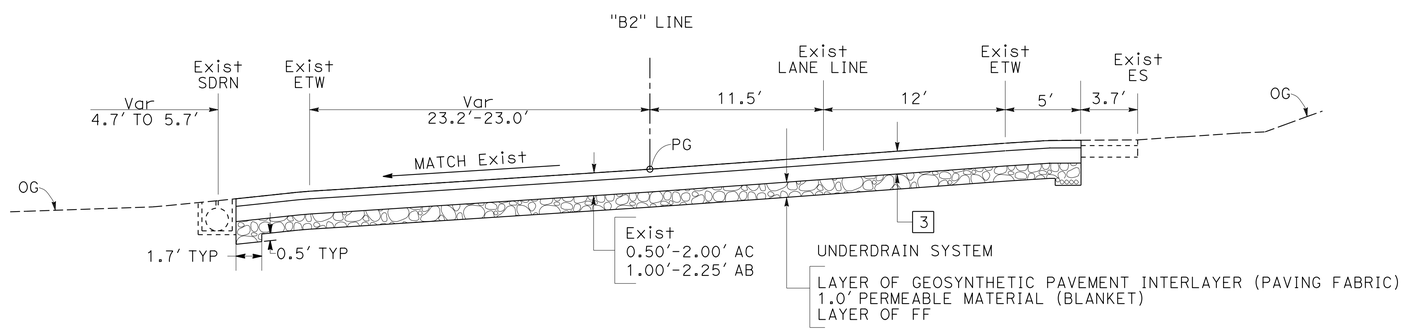

Sta "B2" 205+59.95 TO Sta "B2" 205+95.09

ROUTE 89

TYPICAL CROSS SECTIONS

NO SCALE

X-9

STATE OF CALIFORNIA - DEPARTMENT OF TRANSPORTATION
Caltrans
NORTH REGION
DIVISION OF ENGINEERING

FUNCTIONAL SUPERVISOR: KEN KEATON

CALCULATED-DESIGNED BY: LITTON WANG
CHECKED BY: KEVIN LEE

REVISED BY | DATE REVISED

LAST REVISION 00-00-00 | DATE PLOTTED => 09-OCT-2013 | TIME PLOTTED => 12:45

Dist	COUNTY	ROUTE	POST MILES TOTAL PROJECT	SHEET No.	TOTAL SHEETS
03	Pla	89	T8.6/12.8	11	77

REGISTERED CIVIL ENGINEER 10-7-13 DATE

10-7-13
PLANS APPROVAL DATE

REGISTERED PROFESSIONAL ENGINEER KEVIN F. LEE No. 78077 Exp. 9-30-13 CIVIL STATE OF CALIFORNIA

THE STATE OF CALIFORNIA OR ITS OFFICERS OR AGENTS SHALL NOT BE RESPONSIBLE FOR THE ACCURACY OR COMPLETENESS OF SCANNED COPIES OF THIS PLAN SHEET.

NOTES:

1. FOR ACCURATE RIGHT OF WAY DATA, CONTACT RIGHT OF WAY ENGINEERING AT THE DISTRICT OFFICE.
2. LOCATION OF EXISTING UTILITY FACILITIES SHOWN ON THESE PLANS ARE APPROXIMATE AND SHALL BE VERIFIED BY THE CONTRACTOR PRIOR TO CONSTRUCTION.
3. NOT ALL SERVICE LINES OR FACILITIES OUTSIDE OF THE STATE RIGHT OF WAY ARE SHOWN.
4. FOR PLASTIC PIPE USE HIGH DENSITY POLYETHYLENE PIPE TYPE "S".

LEGEND:

- # DRAINAGE SYSTEM NUMBER
- X DRAINAGE UNIT NUMBER
- COLD PLANE 2% TO 5%
- OVERLAY, 2% AND Var CROSS SLOPE
- UNDERDRAIN SYSTEM
- REMOVE CONCRETE CURB
- UTILITY POTHOLE
- GRADE TO DRAIN
- TEMPORARY FENCE (TYPE ESA)

ABBREVIATIONS:

PMP = PERFORATED METAL PIPE
PH = UTILITY POTHOLE

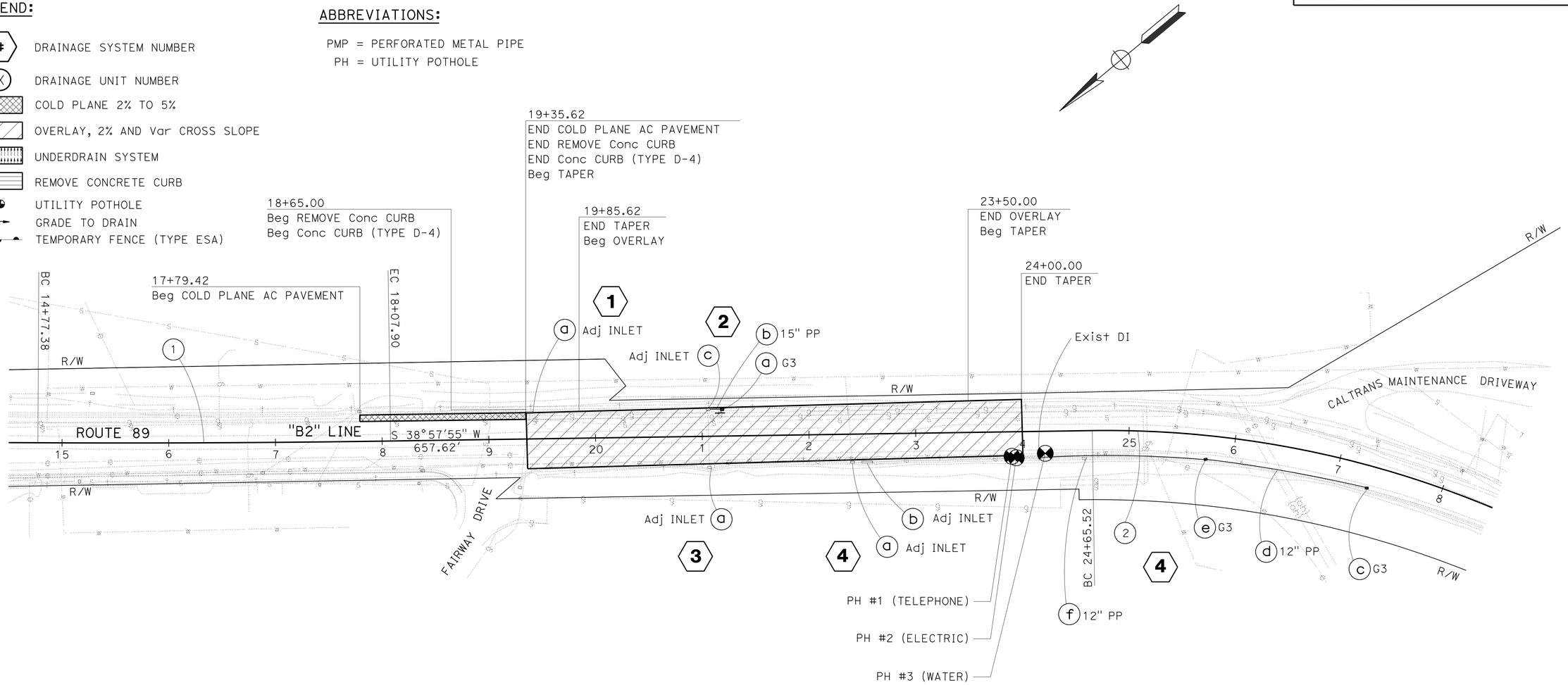

UTILITY LOCATION DATA

	UTILITY	CONDUIT	DEPTH *	NORTHING	EASTING
PH #1	TELEPHONE	4" PVC	53"	2191394.80	7086591.48
PH #2	ELECTRIC	4" PVC	48"	2191392.56	7086587.84
PH #2	ELECTRIC	4" PVC	52"	2191392.56	7086587.84
PH #3	WATER	10" ACP	48"	2191369.04	7086573.61

* DEPTH IS FROM ORIGINAL GROUND TO THE TOP OF UTILITY CONDUIT.

CURVE DATA

No. #	R	Δ	T	L
1	16665′	1°8′11"	165.27′	330.52′
2	935′	48°56′48"	425.60′	798.78′

LAYOUT

SCALE: 1" = 50′

L-1

REVISED BY | DATE REVISED
KEVIN LEE | VINH LAO
CALCULATED-DESIGNED BY | CHECKED BY
FUNCTIONAL SUPERVISOR: KEN KEATON
STATE OF CALIFORNIA - DEPARTMENT OF TRANSPORTATION
Caltrans
NORTH REGION DIVISION OF ENGINEERING

LAST REVISION 00-00-00 | DATE PLOTTED => 09-OCT-2013 | TIME PLOTTED => 12:45

Dist	COUNTY	ROUTE	POST MILES TOTAL PROJECT	SHEET No.	TOTAL SHEETS
03	Pla	89	T8.6/12.8	12	77

REGISTERED CIVIL ENGINEER 10-7-13 DATE

10-7-13
PLANS APPROVAL DATE

REGISTERED PROFESSIONAL ENGINEER KEVIN F. LEE No. 78077 Exp. 9-30-13 CIVIL STATE OF CALIFORNIA

THE STATE OF CALIFORNIA OR ITS OFFICERS OR AGENTS SHALL NOT BE RESPONSIBLE FOR THE ACCURACY OR COMPLETENESS OF SCANNED COPIES OF THIS PLAN SHEET.

NOTES:

1. FOR ACCURATE RIGHT OF WAY DATA, CONTACT RIGHT OF WAY ENGINEERING AT THE DISTRICT OFFICE.

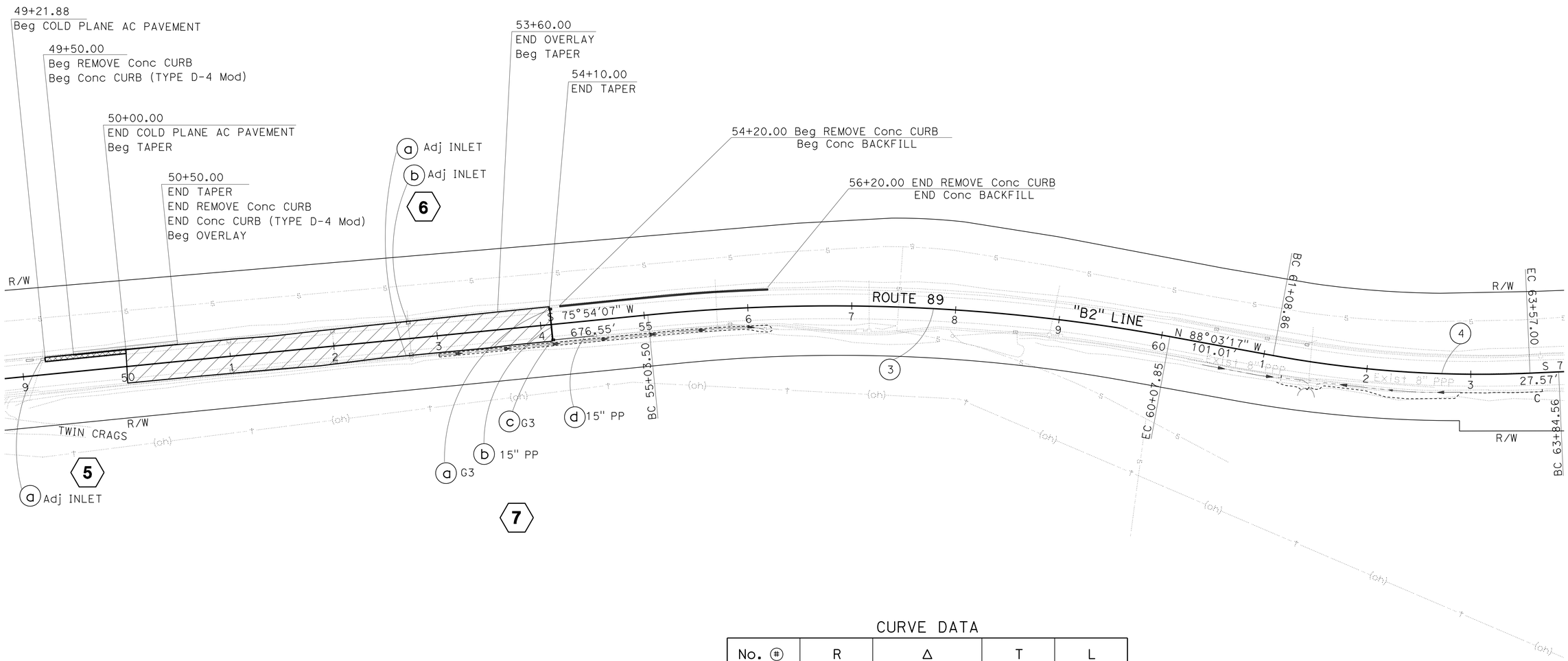

CURVE DATA

No. ⓝ	R	Δ	T	L
3	1801′	16°2′37"	253.84′	504.35′
4	1099′	12°56′08"	124.60′	248.14′

LAYOUT

SCALE: 1" = 50′

L-2

STATE OF CALIFORNIA - DEPARTMENT OF TRANSPORTATION
Caltrans
NORTH REGION
DIVISION OF ENGINEERING

FUNCTIONAL SUPERVISOR: KEN KEATON
CALCULATED-DESIGNED BY: KEVIN LEE
CHECKED BY: VINH LAO
REVISED BY
DATE REVISED

LAST REVISION 00-00-00
DATE PLOTTED => 09-OCT-2013
TIME PLOTTED => 12:45

Dist	COUNTY	ROUTE	POST MILES TOTAL PROJECT	SHEET No.	TOTAL SHEETS
03	Pla	89	T8.6/12.8	13	77

REGISTERED CIVIL ENGINEER 10-7-13 DATE

10-7-13
PLANS APPROVAL DATE

REGISTERED PROFESSIONAL ENGINEER KEVIN F. LEE No. 78077 Exp. 9-30-13 CIVIL STATE OF CALIFORNIA

THE STATE OF CALIFORNIA OR ITS OFFICERS OR AGENTS SHALL NOT BE RESPONSIBLE FOR THE ACCURACY OR COMPLETENESS OF SCANNED COPIES OF THIS PLAN SHEET.

NOTES:

1. FOR ACCURATE RIGHT OF WAY DATA, CONTACT RIGHT OF WAY ENGINEERING AT THE DISTRICT OFFICE.

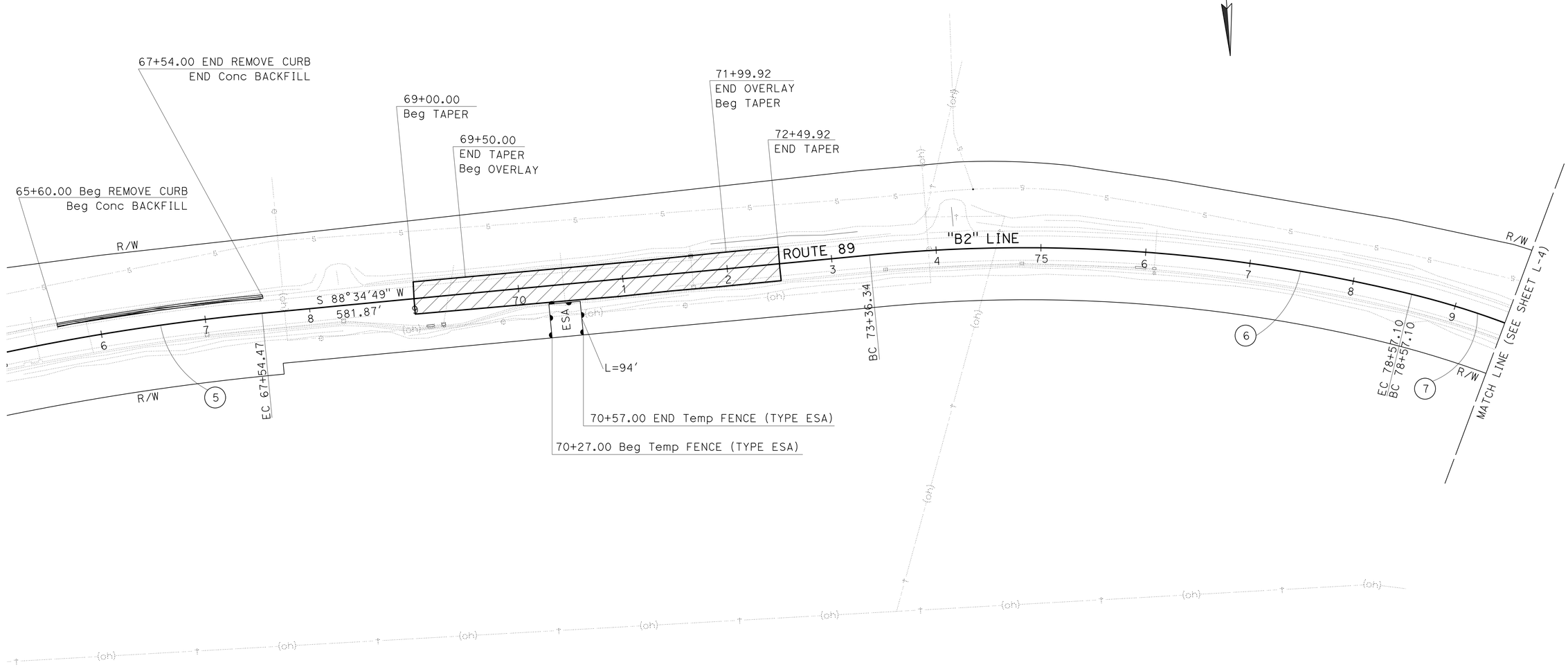

CURVE DATA

No. (#)	R	Δ	T	L
(5)	2215'	9°34'14"	185.39'	369.91'
(6)	1556'	19°10'48"	262.84'	520.76'
(7)	788'	15°35'38"	107.93'	214.51'

LAYOUT

SCALE: 1" = 50'

L-3

REVISED BY | DATE REVISED
KEVIN LEE | VINH LAO
CALCULATED-DESIGNED BY | CHECKED BY
FUNCTIONAL SUPERVISOR
KEN KEATON

STATE OF CALIFORNIA - DEPARTMENT OF TRANSPORTATION
Caltrans
NORTH REGION
DIVISION OF ENGINEERING

LAST REVISION 00-00-00 | DATE PLOTTED => 09-OCT-2013 | TIME PLOTTED => 12:45

Dist	COUNTY	ROUTE	POST MILES TOTAL PROJECT	SHEET No.	TOTAL SHEETS
03	Pla	89	T8.6/12.8	14	77

REGISTERED CIVIL ENGINEER 10-7-13 DATE

10-7-13
PLANS APPROVAL DATE

REGISTERED PROFESSIONAL ENGINEER
KEVIN F. LEE
No. 78077
Exp. 9-30-13
CIVIL
STATE OF CALIFORNIA

THE STATE OF CALIFORNIA OR ITS OFFICERS OR AGENTS SHALL NOT BE RESPONSIBLE FOR THE ACCURACY OR COMPLETENESS OF SCANNED COPIES OF THIS PLAN SHEET.

NOTES:

1. FOR ACCURATE RIGHT OF WAY DATA, CONTACT RIGHT OF WAY ENGINEERING AT THE DISTRICT OFFICE.

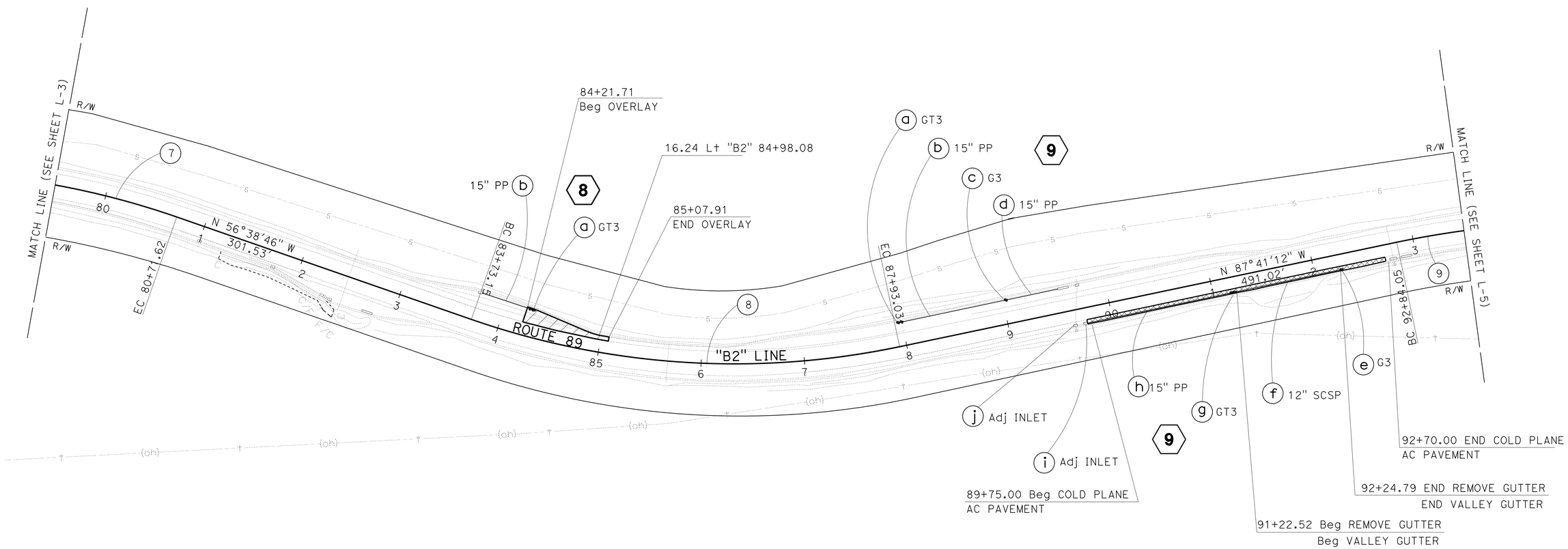

CURVE DATA

No. (#)	R	Δ	T	L
7	788′	15°35′38"	107.93′	214.51′
8	775′	31°2′26"	215.23′	419.88′
9	900′	22°44′55"	181.05′	357.34′

LAYOUT

SCALE: 1" = 50′

L-4

STATE OF CALIFORNIA - DEPARTMENT OF TRANSPORTATION
Caltrans
NORTH REGION
DIVISION OF ENGINEERING

FUNCTIONAL SUPERVISOR: KEN KEATON

CALCULATED-DESIGNED BY: KEVIN LEE
CHECKED BY: VINH LAO
REVISED BY
DATE REVISED

LAST REVISION 00-00-00
DATE PLOTTED => 09-OCT-2013
TIME PLOTTED => 12:45

Dist	COUNTY	ROUTE	POST MILES TOTAL PROJECT	SHEET No.	TOTAL SHEETS
03	Pla	89	T8.6/12.8	15	77

REGISTERED CIVIL ENGINEER 10-7-13 DATE

10-7-13
PLANS APPROVAL DATE

REGISTERED PROFESSIONAL ENGINEER KEVIN F. LEE No. 78077 Exp. 9-30-13 CIVIL STATE OF CALIFORNIA

THE STATE OF CALIFORNIA OR ITS OFFICERS OR AGENTS SHALL NOT BE RESPONSIBLE FOR THE ACCURACY OR COMPLETENESS OF SCANNED COPIES OF THIS PLAN SHEET.

NOTES:

1. FOR ACCURATE RIGHT OF WAY DATA, CONTACT RIGHT OF WAY ENGINEERING AT THE DISTRICT OFFICE.

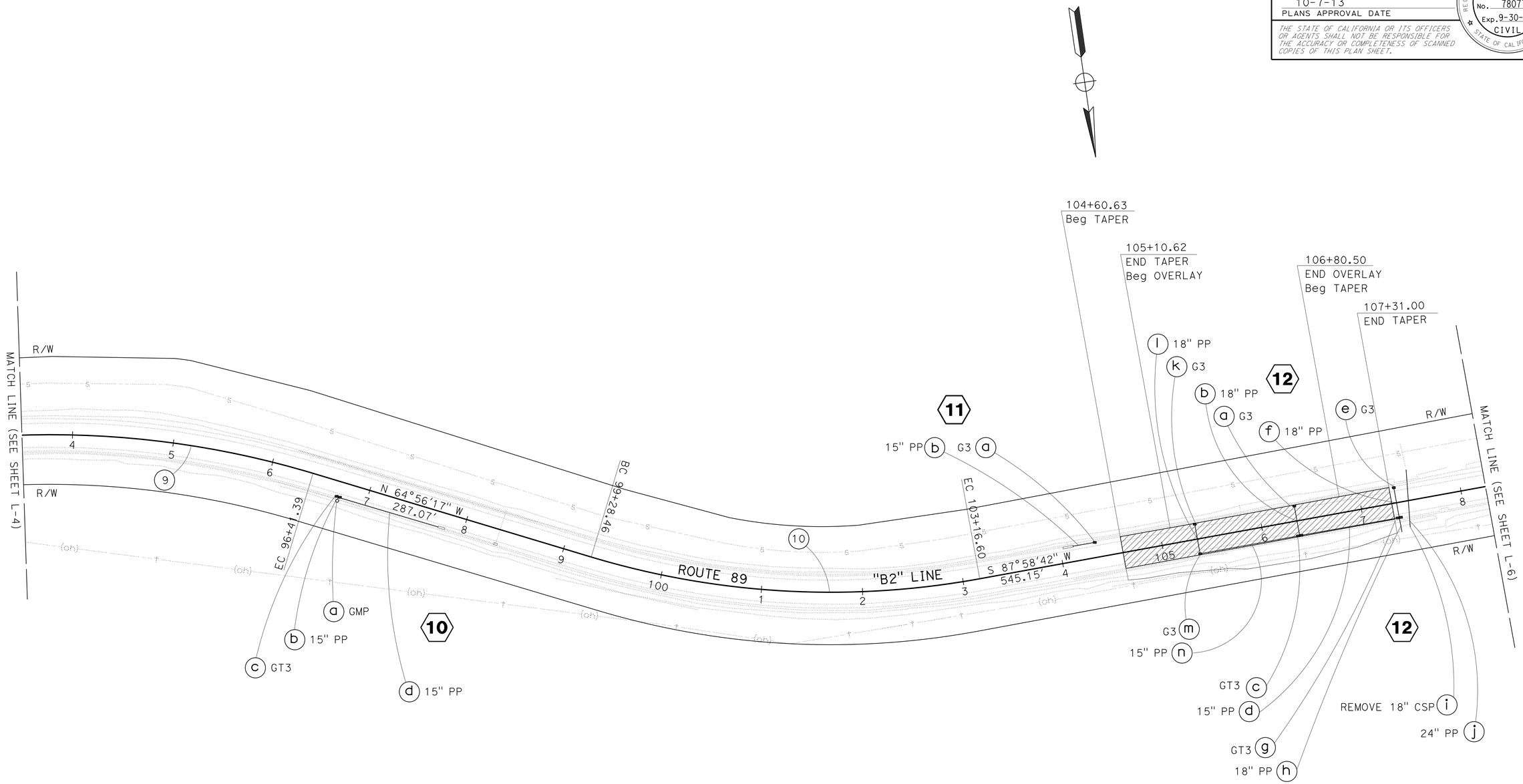

CURVE DATA

No. ⊕	R	Δ	T	L
9	900′	22°44′55"	181.05′	357.34′
10	821′	27°5′00"	197.76′	388.14′

LAYOUT

SCALE: 1" = 50′

L-5

STATE OF CALIFORNIA - DEPARTMENT OF TRANSPORTATION
Caltrans
NORTH REGION
DIVISION OF ENGINEERING

FUNCTIONAL SUPERVISOR: KEN KEATON

CALCULATED-DESIGNED BY
CHECKED BY
REVISED BY: VINH LAO
DATE REVISED

LAST REVISION 00-00-00 | DATE PLOTTED => 09-OCT-2013 | TIME PLOTTED => 12:45

Dist	COUNTY	ROUTE	POST MILES TOTAL PROJECT	SHEET No.	TOTAL SHEETS
03	Pla	89	T8.6/12.8	16	77

REGISTERED CIVIL ENGINEER 10-7-13 DATE

10-7-13
PLANS APPROVAL DATE

REGISTERED PROFESSIONAL ENGINEER KEVIN F. LEE No. 78077 Exp. 9-30-13 CIVIL STATE OF CALIFORNIA

THE STATE OF CALIFORNIA OR ITS OFFICERS OR AGENTS SHALL NOT BE RESPONSIBLE FOR THE ACCURACY OR COMPLETENESS OF SCANNED COPIES OF THIS PLAN SHEET.

NOTES:

1. FOR ACCURATE RIGHT OF WAY DATA, CONTACT RIGHT OF WAY ENGINEERING AT THE DISTRICT OFFICE.
2. DRAINAGE SYSTEM No. 13 IS OMMITTED.

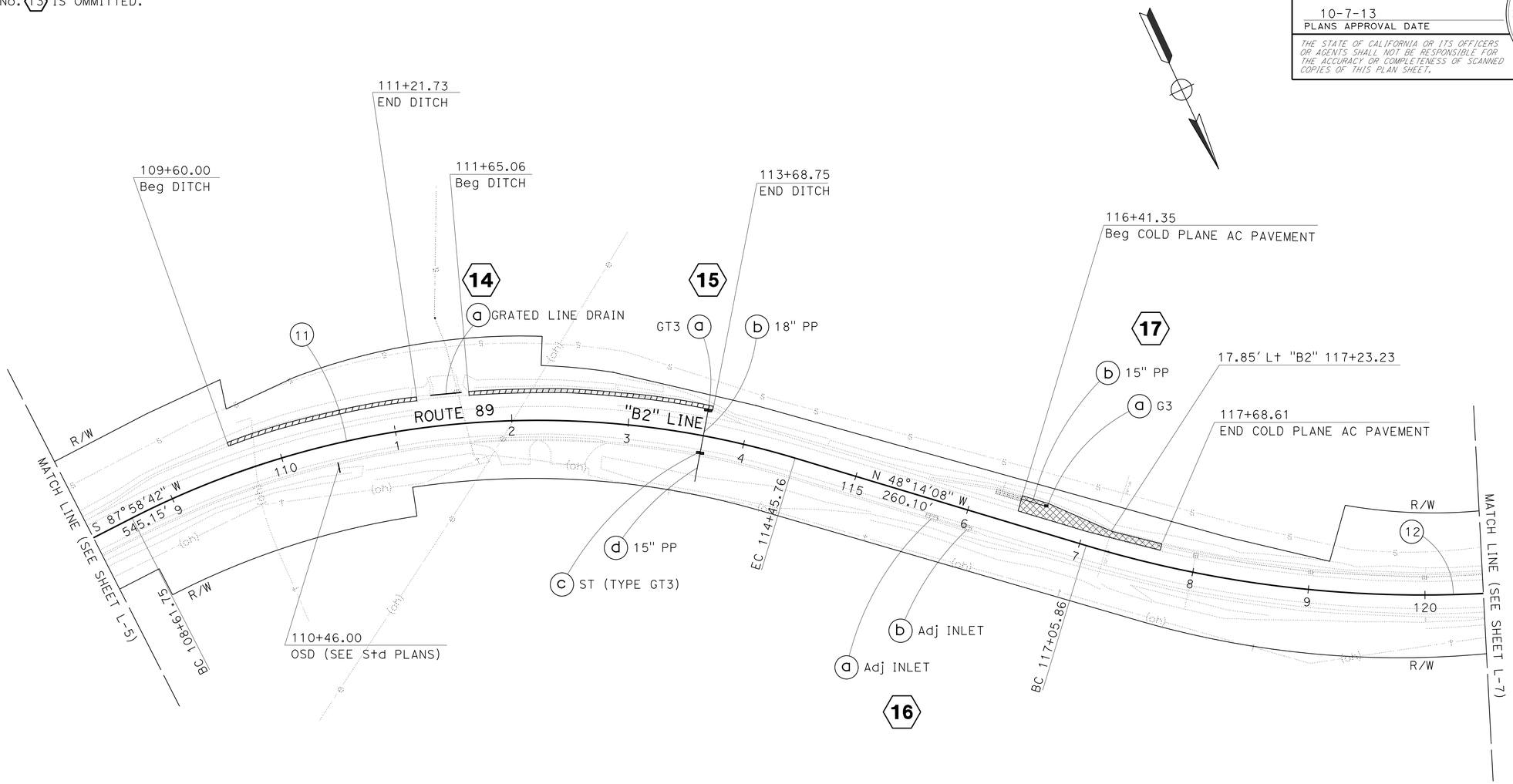

CURVE DATA

No. #	R	Δ	T	L
11	764'	43°47'09"	307.10'	584.01'
12	1001'	29°39'33"	264.94'	517.99'

LAYOUT

SCALE: 1" = 50'

L-6

REVISED BY | DATE REVISED
VINH LAO
CALCULATED-DESIGNED BY | CHECKED BY
FUNCTIONAL SUPERVISOR
KEN KEATON
STATE OF CALIFORNIA - DEPARTMENT OF TRANSPORTATION
Caltrans
NORTH REGION
DIVISION OF ENGINEERING

LAST REVISION 00-00-00
DATE PLOTTED => 09-OCT-2013
TIME PLOTTED => 12:45

Dist	COUNTY	ROUTE	POST MILES TOTAL PROJECT	SHEET No.	TOTAL SHEETS
03	Pla	89	T8.6/12.8	17	77

REGISTERED CIVIL ENGINEER 10-7-13 DATE

10-7-13
PLANS APPROVAL DATE

REGISTERED PROFESSIONAL ENGINEER
KEVIN F. LEE
No. 78077
Exp. 9-30-13
CIVIL
STATE OF CALIFORNIA

THE STATE OF CALIFORNIA OR ITS OFFICERS OR AGENTS SHALL NOT BE RESPONSIBLE FOR THE ACCURACY OR COMPLETENESS OF SCANNED COPIES OF THIS PLAN SHEET.

NOTES:

1. FOR ACCURATE RIGHT OF WAY DATA, CONTACT RIGHT OF WAY ENGINEERING AT THE DISTRICT OFFICE.

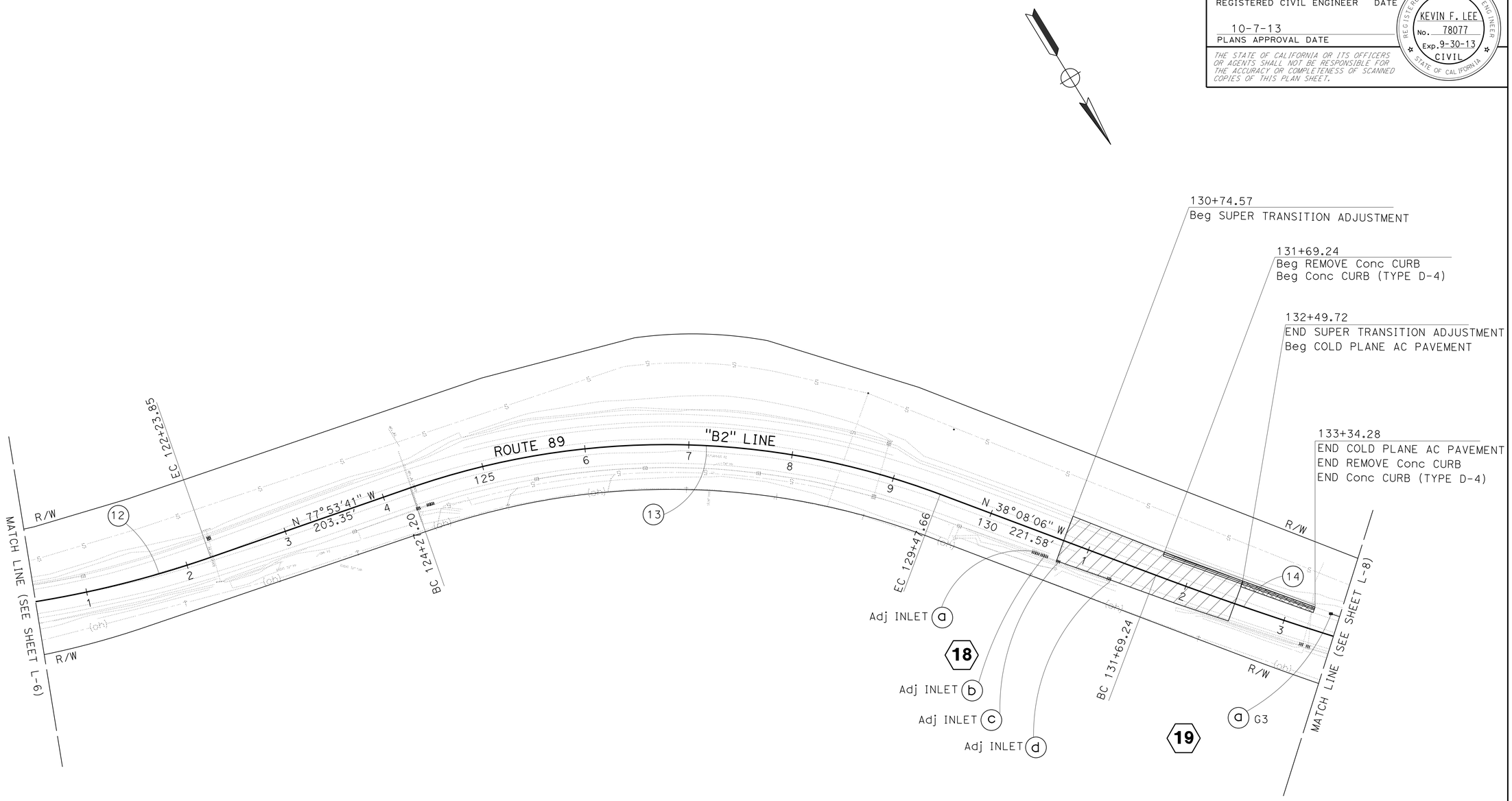

CURVE DATA

No. (#)	R	Δ	T	L
12	1001′	29°39′33″	264.94′	517.99′
13	750′	39°45′35″	271.20′	520.45′
14	3281′	8°55′28″	256.03′	511.02′

LAYOUT

SCALE: 1" = 50′

L-7

STATE OF CALIFORNIA - DEPARTMENT OF TRANSPORTATION
Caltrans
NORTH REGION
DIVISION OF ENGINEERING

FUNCTIONAL SUPERVISOR: KEN KEATON

CALCULATED-DESIGNED BY: KEVIN LEE
CHECKED BY: VINH LAO

REVISED BY
DATE REVISED

LAST REVISION 00-00-00
DATE PLOTTED => 09-OCT-2013
TIME PLOTTED => 12:46

Dist	COUNTY	ROUTE	POST MILES TOTAL PROJECT	SHEET No.	TOTAL SHEETS
03	Pla	89	T8.6/12.8	18	77

REGISTERED CIVIL ENGINEER 10-7-13 DATE

10-7-13
PLANS APPROVAL DATE

REGISTERED PROFESSIONAL ENGINEER KEVIN F. LEE No. 78077 Exp. 9-30-13 CIVIL STATE OF CALIFORNIA

THE STATE OF CALIFORNIA OR ITS OFFICERS OR AGENTS SHALL NOT BE RESPONSIBLE FOR THE ACCURACY OR COMPLETENESS OF SCANNED COPIES OF THIS PLAN SHEET.

NOTES:

1. FOR ACCURATE RIGHT OF WAY DATA, CONTACT RIGHT OF WAY ENGINEERING AT THE DISTRICT OFFICE.

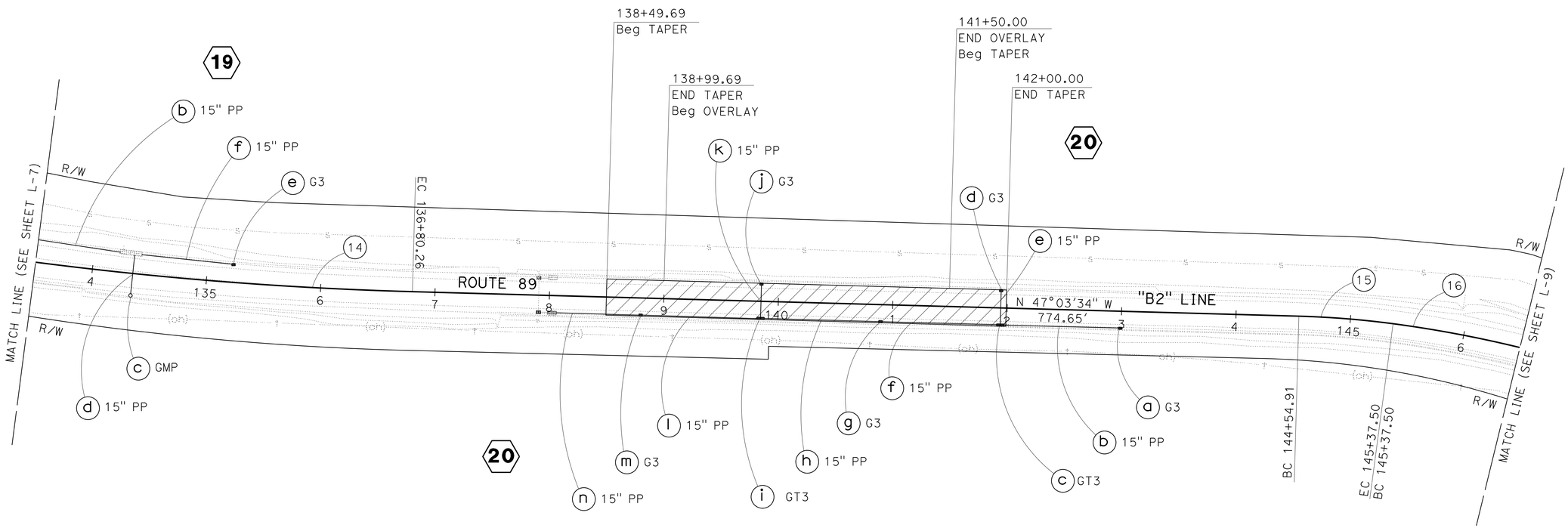

CURVE DATA

No. ⊕	R	Δ	T	L
14	3281′	8°55′28"	256.03′	511.02′
15	791′	5°58′40"	41.34′	82.59′
16	1048′	10°5′22"	92.47′	184.44′

LAYOUT

SCALE: 1" = 50′

L-8

STATE OF CALIFORNIA - DEPARTMENT OF TRANSPORTATION
Caltrans®
NORTH REGION
DIVISION OF ENGINEERING

FUNCTIONAL SUPERVISOR: KEN KEATON

CALCULATED-DESIGNED BY: KEVIN LEE
CHECKED BY: VINH LAO

REVISED BY
DATE REVISED

LAST REVISION 00-00-00 | DATE PLOTTED => 09-OCT-2013 | TIME PLOTTED => 12:46

Dist	COUNTY	ROUTE	POST MILES TOTAL PROJECT	SHEET No.	TOTAL SHEETS
03	Pla	89	T8.6/12.8	19	77

REGISTERED CIVIL ENGINEER 10-7-13 DATE

10-7-13
PLANS APPROVAL DATE

REGISTERED PROFESSIONAL ENGINEER
KEVIN F. LEE
No. 78077
Exp. 9-30-13
CIVIL
STATE OF CALIFORNIA

THE STATE OF CALIFORNIA OR ITS OFFICERS OR AGENTS SHALL NOT BE RESPONSIBLE FOR THE ACCURACY OR COMPLETENESS OF SCANNED COPIES OF THIS PLAN SHEET.

NOTES:

1. FOR ACCURATE RIGHT OF WAY DATA, CONTACT RIGHT OF WAY ENGINEERING AT THE DISTRICT OFFICE.

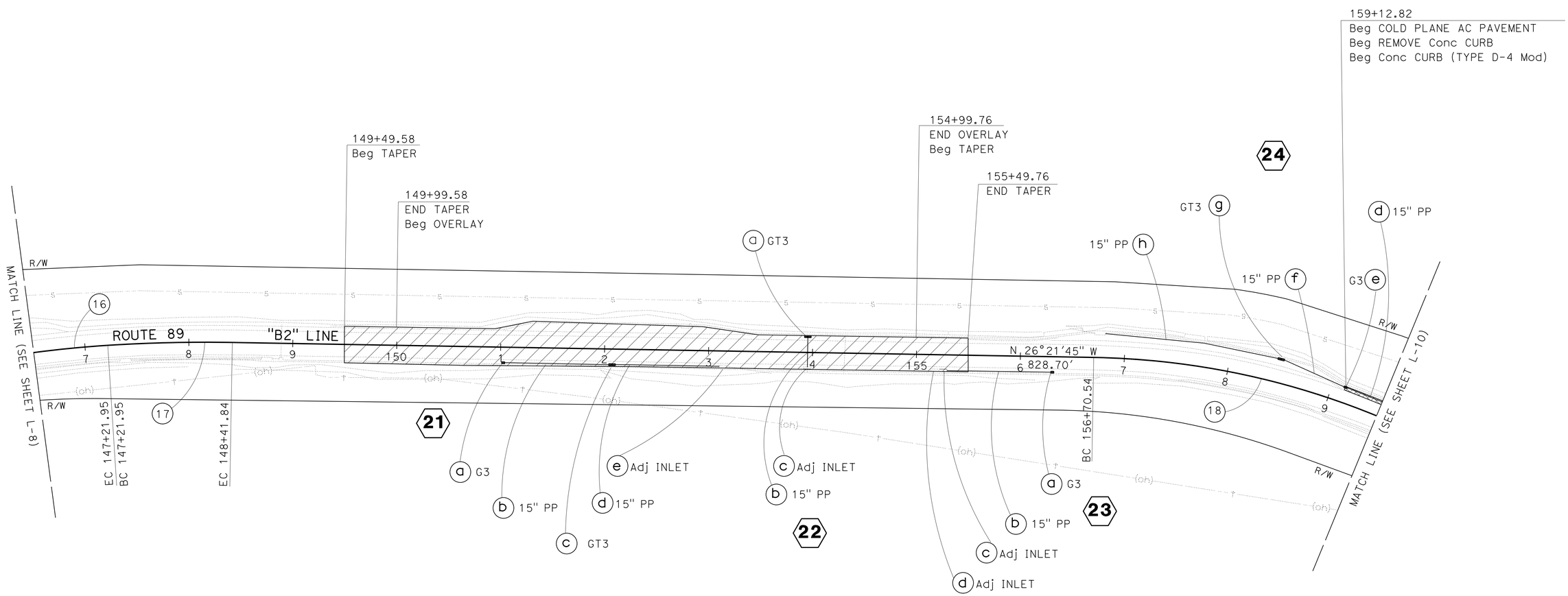

CURVE DATA

No. (#)	R	Δ	T	L
16	1048′	10°5′22"	92.47′	184.44′
17	1484′	4°37′48"	59.98′	119.89′
18	750′	21°58′18"	145.60′	287.62′

LAYOUT

SCALE: 1" = 50′

L-9

STATE OF CALIFORNIA - DEPARTMENT OF TRANSPORTATION
Caltrans
NORTH REGION
DIVISION OF ENGINEERING

FUNCTIONAL SUPERVISOR: KEN KEATON
CALCULATED-DESIGNED BY: KEVIN LEE
CHECKED BY: VINH LAO
REVISED BY
DATE REVISED

LAST REVISION 00-00-00
DATE PLOTTED => 09-OCT-2013
TIME PLOTTED => 12:46

Dist	COUNTY	ROUTE	POST MILES TOTAL PROJECT	SHEET No.	TOTAL SHEETS
03	Pla	89	T8.6/12.8	20	77

REGISTERED CIVIL ENGINEER 10-7-13 DATE

10-7-13
PLANS APPROVAL DATE

REGISTERED PROFESSIONAL ENGINEER KEVIN F. LEE No. 78077 Exp. 9-30-13 CIVIL STATE OF CALIFORNIA

THE STATE OF CALIFORNIA OR ITS OFFICERS OR AGENTS SHALL NOT BE RESPONSIBLE FOR THE ACCURACY OR COMPLETENESS OF SCANNED COPIES OF THIS PLAN SHEET.

NOTES:

1. FOR ACCURATE RIGHT OF WAY DATA, CONTACT RIGHT OF WAY ENGINEERING AT THE DISTRICT OFFICE.

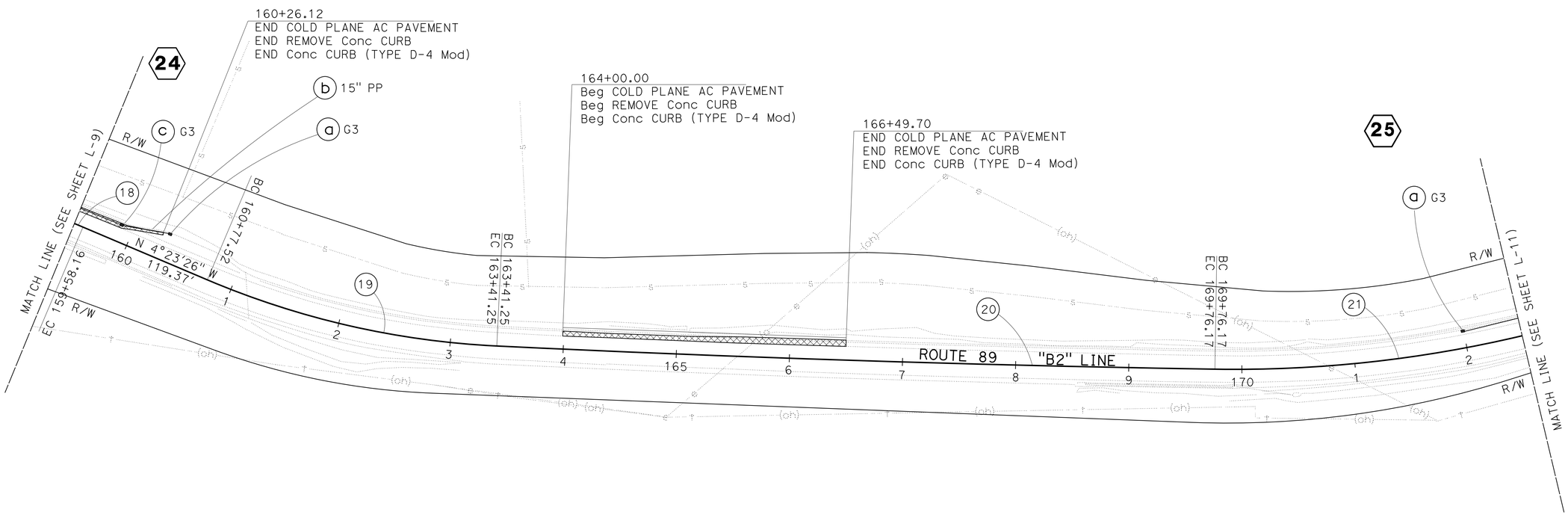

CURVE DATA

No. (#)	R	Δ	T	L
18	750′	21°58′18″	145.60′	287.62′
19	748′	20°12′02″	133.25′	263.73′
20	19788.9′	00°17′22″	317.48′	634.91′
21	1100′	15°55′30″	153.86′	305.74′

LAYOUT

SCALE: 1" = 50′

L-10

STATE OF CALIFORNIA - DEPARTMENT OF TRANSPORTATION
Caltrans
NORTH REGION
DIVISION OF ENGINEERING

FUNCTIONAL SUPERVISOR: KEN KEATON
CALCULATED-DESIGNED BY: KEVIN LEE
CHECKED BY: VINH LAO
REVISED BY
DATE REVISED

LAST REVISION 00-00-00
DATE PLOTTED => 09-OCT-2013
TIME PLOTTED => 12:46

Dist	COUNTY	ROUTE	POST MILES TOTAL PROJECT	SHEET No.	TOTAL SHEETS
03	Pla	89	T8.6/12.8	21	77

REGISTERED CIVIL ENGINEER 10-7-13 DATE

10-7-13
PLANS APPROVAL DATE

REGISTERED PROFESSIONAL ENGINEER KEVIN F. LEE No. 78077 Exp. 9-30-13 CIVIL STATE OF CALIFORNIA

THE STATE OF CALIFORNIA OR ITS OFFICERS OR AGENTS SHALL NOT BE RESPONSIBLE FOR THE ACCURACY OR COMPLETENESS OF SCANNED COPIES OF THIS PLAN SHEET.

NOTES:

1. FOR ACCURATE RIGHT OF WAY DATA, CONTACT RIGHT OF WAY ENGINEERING AT THE DISTRICT OFFICE.

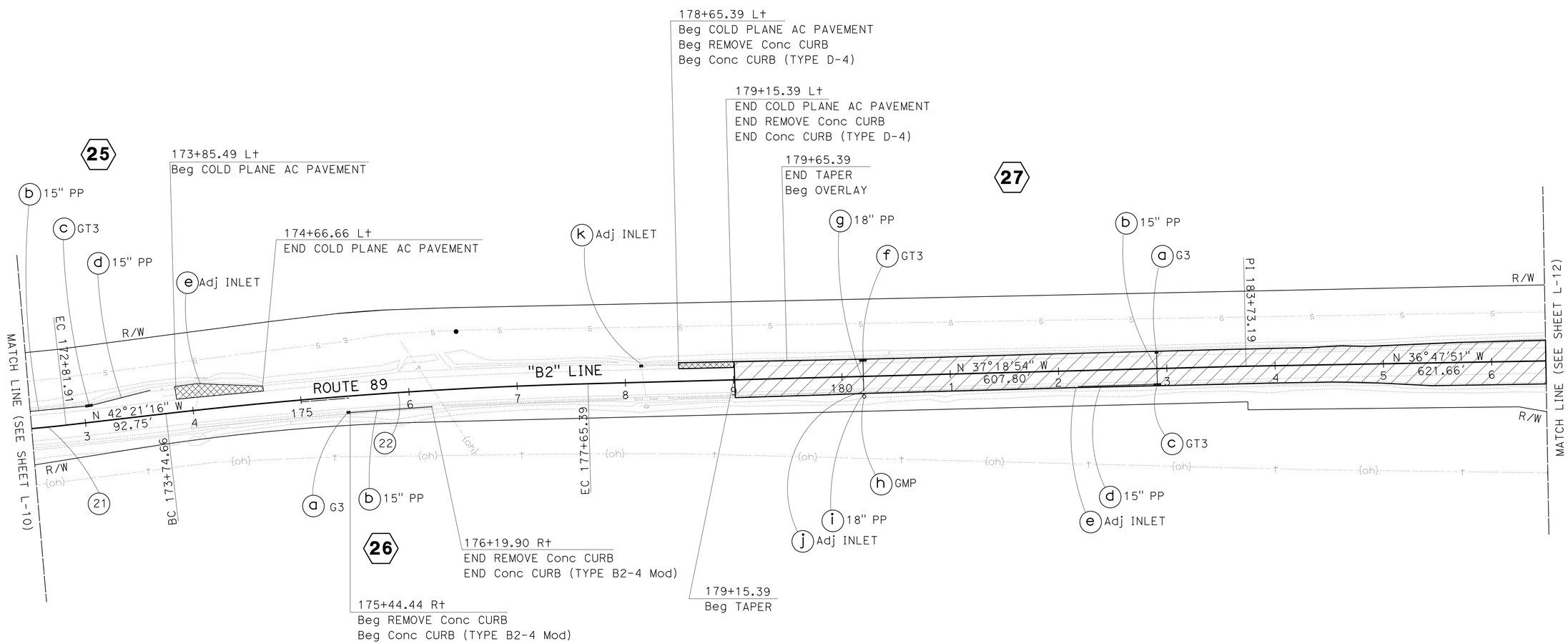

CURVE DATA

No. (#)	R	Δ	T	L
21	1100′	15°55′30"	153.86′	305.74′
22	4442′	5°2′22"	195.49′	390.73′

LAYOUT

SCALE: 1" = 50′

L-11

STATE OF CALIFORNIA - DEPARTMENT OF TRANSPORTATION
Caltrans
NORTH REGION
DIVISION OF ENGINEERING

FUNCTIONAL SUPERVISOR: KEN KEATON
CALCULATED-DESIGNED BY: KEVIN LEE
CHECKED BY: VINH LAO
REVISED BY
DATE REVISED

LAST REVISION 00-00-00
DATE PLOTTED => 09-OCT-2013
TIME PLOTTED => 12:46

Dist	COUNTY	ROUTE	POST MILES TOTAL PROJECT	SHEET No.	TOTAL SHEETS
03	Pla	89	T8.6/12.8	22	77

REGISTERED CIVIL ENGINEER 10-7-13 DATE

10-7-13
PLANS APPROVAL DATE

REGISTERED PROFESSIONAL ENGINEER KEVIN F. LEE No. 78077 Exp. 9-30-13 CIVIL STATE OF CALIFORNIA

THE STATE OF CALIFORNIA OR ITS OFFICERS OR AGENTS SHALL NOT BE RESPONSIBLE FOR THE ACCURACY OR COMPLETENESS OF SCANNED COPIES OF THIS PLAN SHEET.

NOTES:

1. FOR ACCURATE RIGHT OF WAY DATA, CONTACT RIGHT OF WAY ENGINEERING AT THE DISTRICT OFFICE.

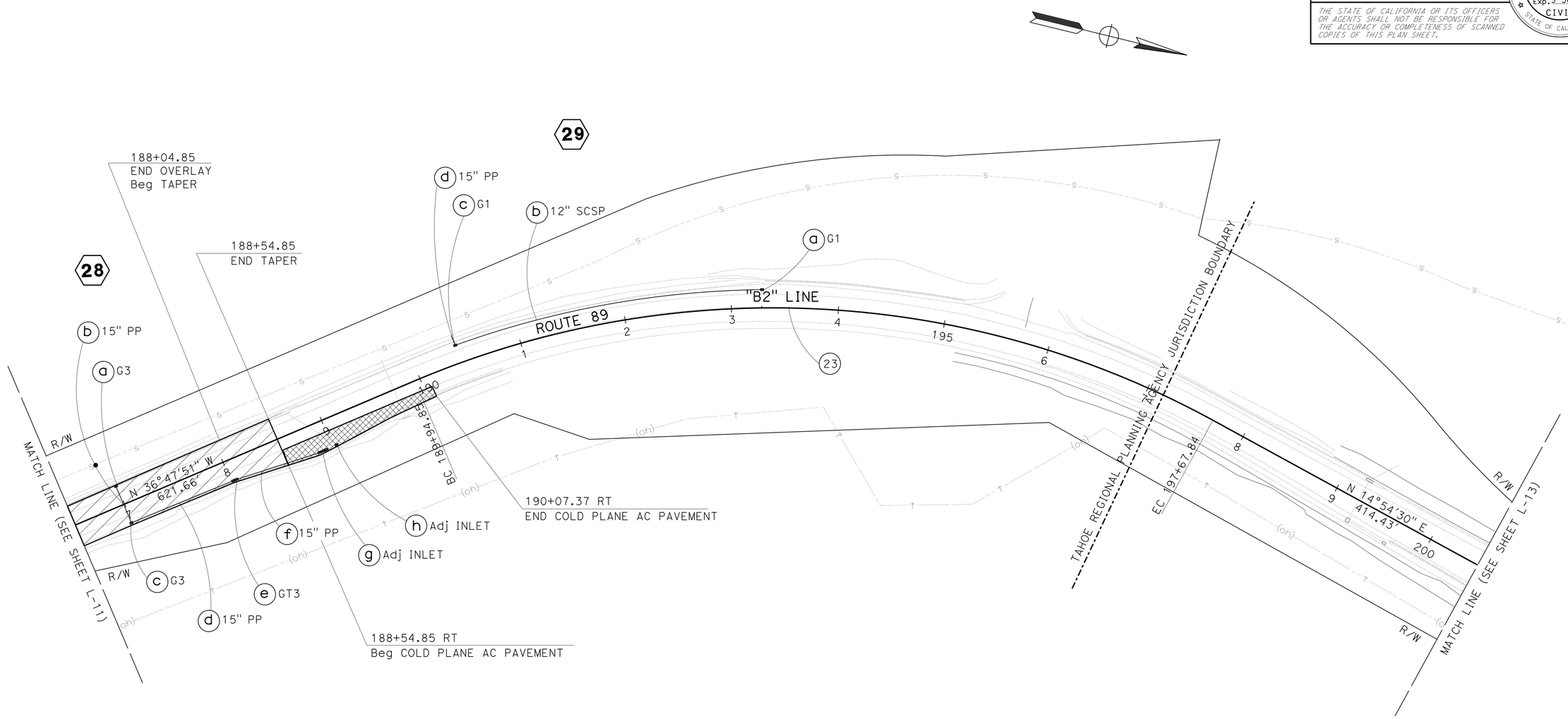

CURVE DATA

No. ⓝ	R	Δ	T	L
23	857′	51°42′22″	415.05′	772.99′

LAYOUT

SCALE: 1" = 50′

L-12

STATE OF CALIFORNIA - DEPARTMENT OF TRANSPORTATION
Caltrans
NORTH REGION
DIVISION OF ENGINEERING

FUNCTIONAL SUPERVISOR: KEN KEATON

CALCULATED-DESIGNED BY: KEVIN LEE
CHECKED BY: VINH LAO

REVISED BY
DATE REVISED

LAST REVISION 00-00-00 | DATE PLOTTED => 09-OCT-2013 | TIME PLOTTED => 12:46

Dist	COUNTY	ROUTE	POST MILES TOTAL PROJECT	SHEET No.	TOTAL SHEETS
03	Pla	89	T8.6/12.8	23	77

REGISTERED CIVIL ENGINEER 10-7-13 DATE

10-7-13
PLANS APPROVAL DATE

REGISTERED PROFESSIONAL ENGINEER
KEVIN F. LEE
No. 78077
Exp. 9-30-13
CIVIL
STATE OF CALIFORNIA

THE STATE OF CALIFORNIA OR ITS OFFICERS OR AGENTS SHALL NOT BE RESPONSIBLE FOR THE ACCURACY OR COMPLETENESS OF SCANNED COPIES OF THIS PLAN SHEET.

NOTES:

1. FOR ACCURATE RIGHT OF WAY DATA, CONTACT RIGHT OF WAY ENGINEERING AT THE DISTRICT OFFICE.

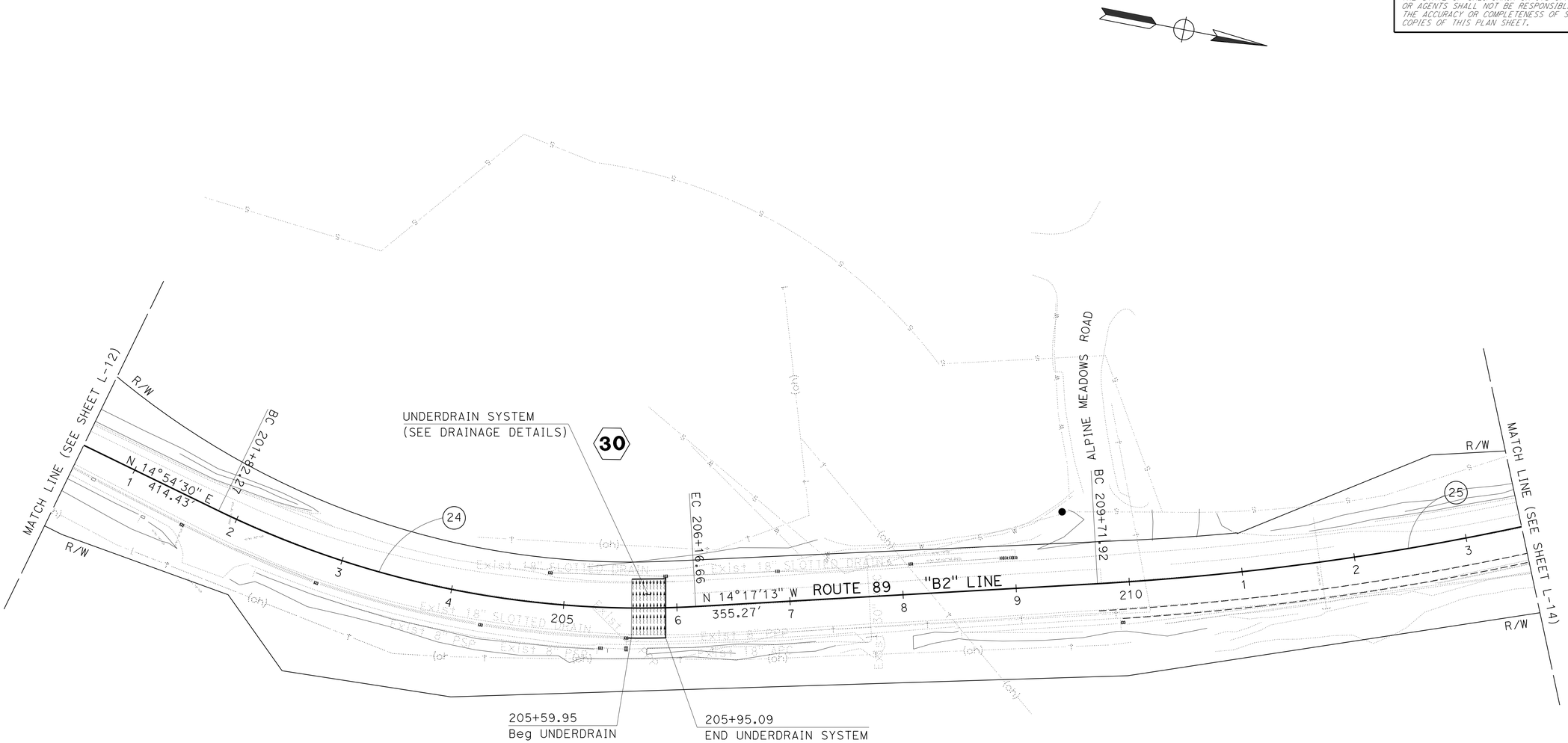

CURVE DATA

No. (#)	R	Δ	T	L
24	852′	29°11′44"	222.02′	434.38′
25	2457′	11°0′38"	236.79′	472.11′

LAYOUT

SCALE: 1" = 50′

L-13

STATE OF CALIFORNIA - DEPARTMENT OF TRANSPORTATION
Caltrans
NORTH REGION
DIVISION OF ENGINEERING

FUNCTIONAL SUPERVISOR: KEN KEATON

CALCULATED-DESIGNED BY: KEVIN LEE
CHECKED BY: VINH LAO

REVISED BY
DATE REVISED

LAST REVISION 00-00-00
DATE PLOTTED => 09-OCT-2013
TIME PLOTTED => 12:46

Dist	COUNTY	ROUTE	POST MILES TOTAL PROJECT	SHEET No.	TOTAL SHEETS
03	Pla	89	T8.6/12.8	24	77

REGISTERED CIVIL ENGINEER 10-7-13 DATE

10-7-13
PLANS APPROVAL DATE

REGISTERED PROFESSIONAL ENGINEER KEVIN F. LEE No. 78077 Exp. 9-30-13 CIVIL STATE OF CALIFORNIA

THE STATE OF CALIFORNIA OR ITS OFFICERS OR AGENTS SHALL NOT BE RESPONSIBLE FOR THE ACCURACY OR COMPLETENESS OF SCANNED COPIES OF THIS PLAN SHEET.

NOTES:

1. FOR ACCURATE RIGHT OF WAY DATA, CONTACT RIGHT OF WAY ENGINEERING AT THE DISTRICT OFFICE.

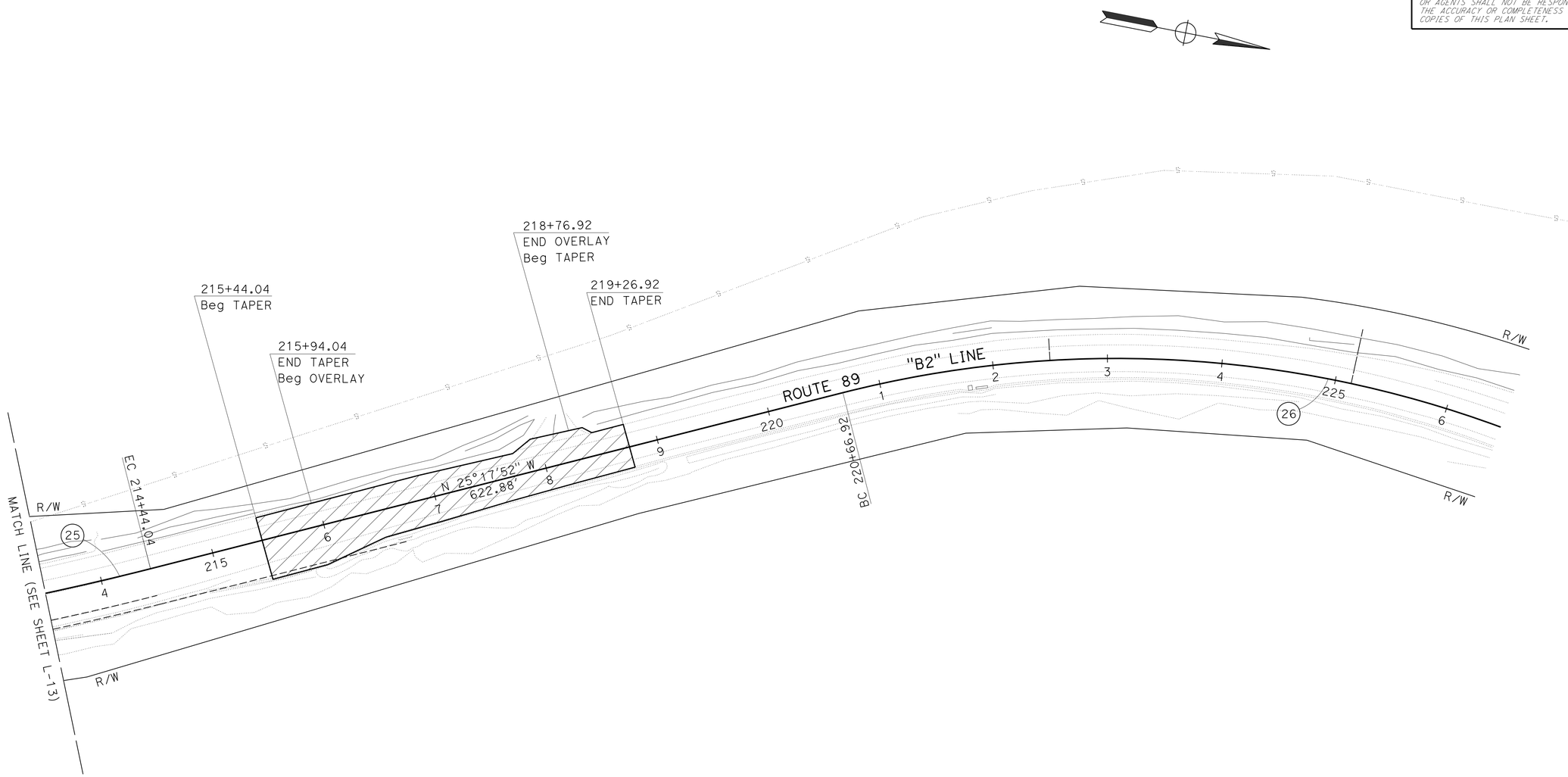

CURVE DATA

No. (#)	R	Δ	T	L
25	2457′	11°0′38″	236.79′	472.11′
26	968′	39°38′40″	348.89′	669.72′

LAYOUT

SCALE: 1" = 50′

L-14

STATE OF CALIFORNIA - DEPARTMENT OF TRANSPORTATION
Caltrans
NORTH REGION
DIVISION OF ENGINEERING

FUNCTIONAL SUPERVISOR: KEN KEATON

CALCULATED-DESIGNED BY: KEVIN LEE
CHECKED BY: VINH LAO

REVISED BY
DATE REVISED

LAST REVISION 00-00-00 | DATE PLOTTED => 09-OCT-2013 | TIME PLOTTED => 12:46

Dist	COUNTY	ROUTE	POST MILES TOTAL PROJECT	SHEET No.	TOTAL SHEETS
03	Pla	89	T8.6/12.8	25	77

REGISTERED CIVIL ENGINEER 10-7-13 DATE

10-7-13
PLANS APPROVAL DATE

REGISTERED PROFESSIONAL ENGINEER KEVIN F. LEE No. 78077 Exp. 9/30/13 CIVIL STATE OF CALIFORNIA

THE STATE OF CALIFORNIA OR ITS OFFICERS OR AGENTS SHALL NOT BE RESPONSIBLE FOR THE ACCURACY OR COMPLETENESS OF SCANNED COPIES OF THIS PLAN SHEET.

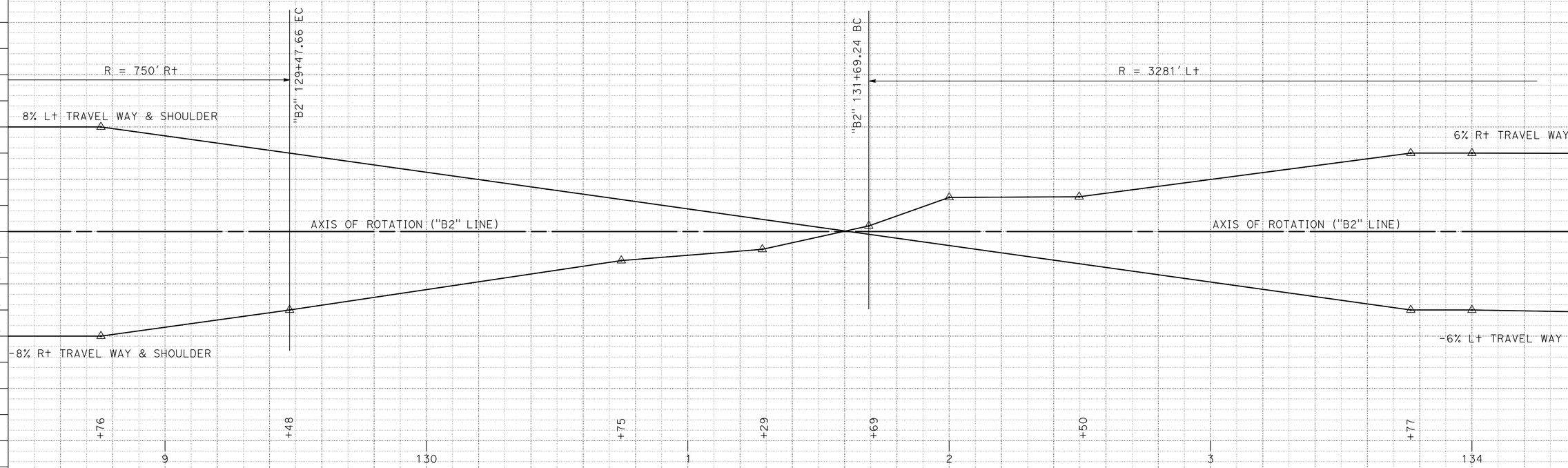

SUPERELEVATION DIAGRAM

SCALE: 1" = 10'

SE- 1

STATION		TOTAL
CY	Exc	
	Emb	

STATE OF CALIFORNIA - DEPARTMENT OF TRANSPORTATION
Caltrans
NORTH REGION
DIVISION OF ENGINEERING

FUNCTIONAL SUPERVISOR: KEN KEATON
CALCULATED-DESIGNED BY: KEVIN LEE
CHECKED BY: VINH LAO
REVISED BY
DATE REVISED

LAST REVISION 00-00-00
DATE PLOTTED => 09-OCT-2013
TIME PLOTTED => 12:46

Dist	COUNTY	ROUTE	POST MILES TOTAL PROJECT	SHEET No.	TOTAL SHEETS
03	Pla	89	T8.6/12.8	26	77

REGISTERED CIVIL ENGINEER 10-7-13 DATE

10-7-13
PLANS APPROVAL DATE

REGISTERED PROFESSIONAL ENGINEER KEVIN F. LEE No. 78077 Exp. 9-30-13 CIVIL STATE OF CALIFORNIA

THE STATE OF CALIFORNIA OR ITS OFFICERS OR AGENTS SHALL NOT BE RESPONSIBLE FOR THE ACCURACY OR COMPLETENESS OF SCANNED COPIES OF THIS PLAN SHEET.

NOTES:

1. FOR DETAILS NOT SHOWN SEE Std PLAN D78A.

LEGEND

CH CURB HEIGHT

→ STRAIGHT GRADE, DOWN GRADE SLOPE.

⇝ GUTTER OR SHOULDERS DIRECTION OF FLOW.

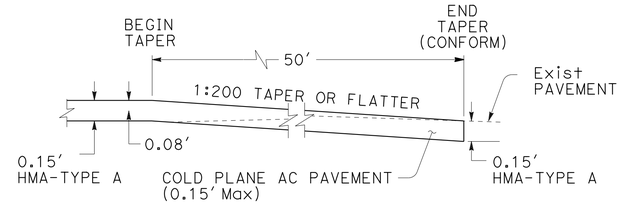

ROUTE 89 OVERLAY TAPER

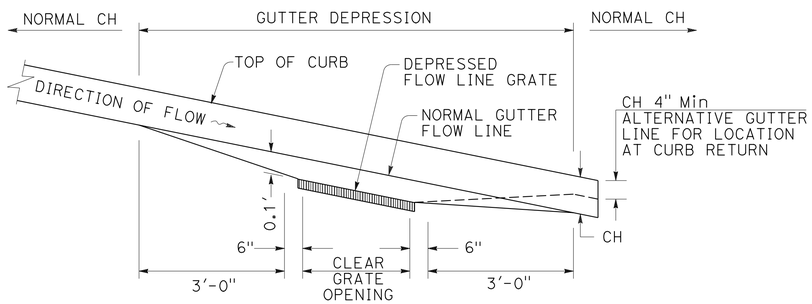

PROFILE

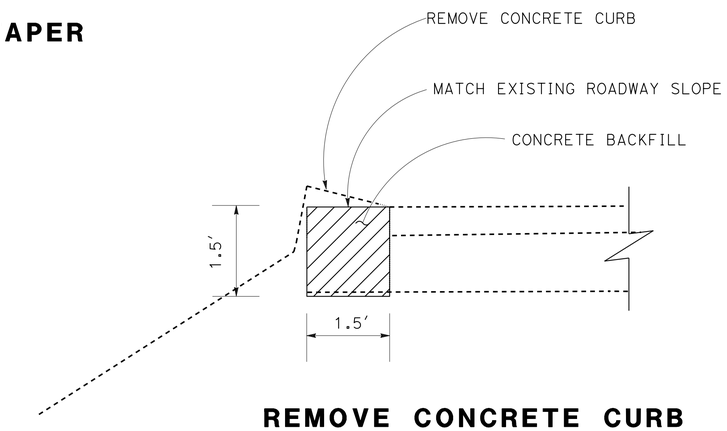

REMOVE CONCRETE CURB

STATION	LAYOUT SHEET
54+50 TO 56+20	L-2
65+60 TO 67+54	L-3

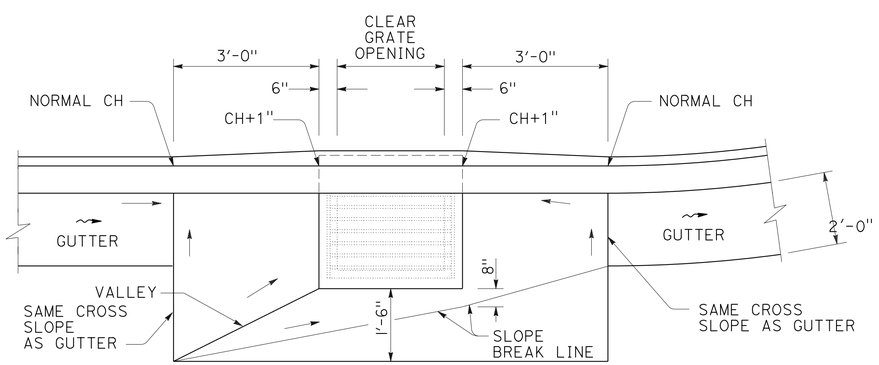

PLAN

INLETS ON GRADE

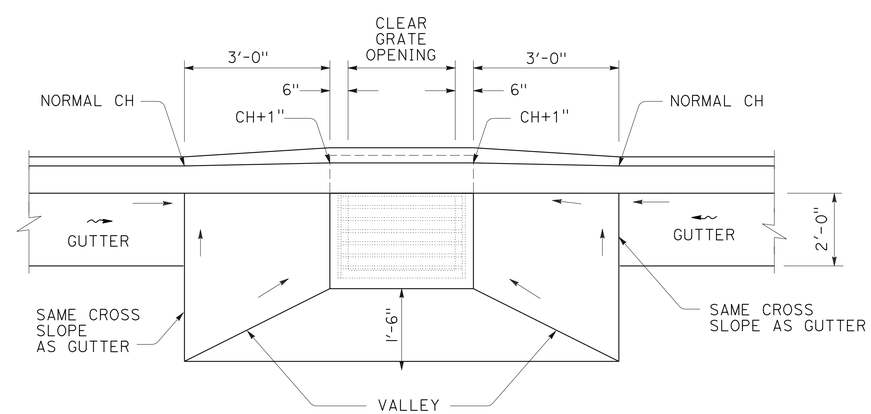

PLAN

INLETS IN GRADE SAG

Mod GUTTER DEPRESSION

NOTE: GUTTER DEPRESSIONS SHALL BE 8" THICK.

CONSTRUCTION DETAILS

NO SCALE

C-1

STATE OF CALIFORNIA - DEPARTMENT OF TRANSPORTATION
NORTH REGION DIVISION OF ENGINEERING
Caltrans

FUNCTIONAL SUPERVISOR: KEN KEATON
CALCULATED-DESIGNED BY: VINH LAO
CHECKED BY: KEVIN LEE
REVISED BY / DATE REVISED

LAST REVISION 00-00-00
DATE PLOTTED => 09-OCT-2013
TIME PLOTTED => 12:46

Dist	COUNTY	ROUTE	POST MILES TOTAL PROJECT	SHEET No.	TOTAL SHEETS
03	Pla	89	T8.6/12.8	27	77

REGISTERED CIVIL ENGINEER 10-7-13 DATE

10-7-13
PLANS APPROVAL DATE

REGISTERED PROFESSIONAL ENGINEER KEVIN F. LEE No. 78077 Exp. 9-30-13 CIVIL STATE OF CALIFORNIA

THE STATE OF CALIFORNIA OR ITS OFFICERS OR AGENTS SHALL NOT BE RESPONSIBLE FOR THE ACCURACY OR COMPLETENESS OF SCANNED COPIES OF THIS PLAN SHEET.

NOTES:

1. FOR DETAILS NOT SHOWN ON SLOTTED PIPE SEE Std PLANS D98B.

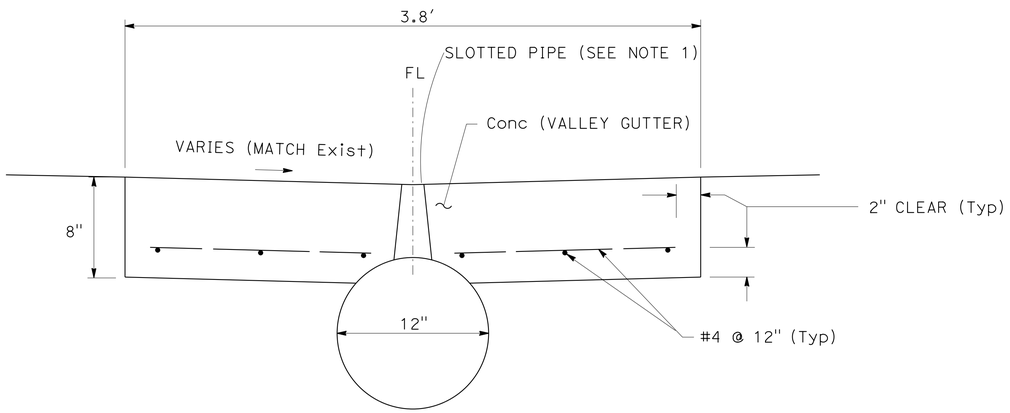

CONCRETE VALLEY GUTTER

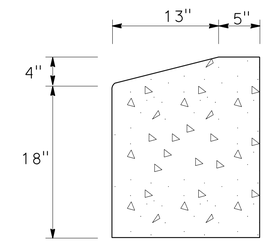

Conc CURB (TYPE D-4 Mod)

49+50.00 TO 50+50.00
159+12.82 TO 160+26.12
164+00.00 TO 166+49.70

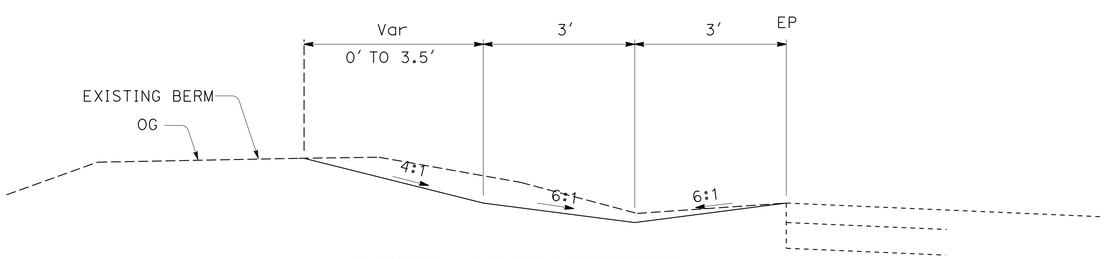

BERM ADJUSTMENT

109+60.00 TO 111+21.73
111+65.06 TO 113+68.75

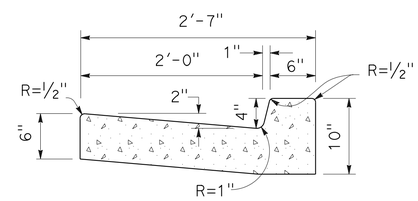

Conc CURB (TYPE B2-4 Mod)

141+37.40 TO 141+91.40
141+97.40 TO 142+97.62
175+44.44 TO 176+19.90
182+18.35 TO 182+86.87

CONSTRUCTION DETAIL

NO SCALE

C-2

STATE OF CALIFORNIA - DEPARTMENT OF TRANSPORTATION
Caltrans
NORTH REGION
DIVISION OF ENGINEERING

FUNCTIONAL SUPERVISOR: KEN KEATON
CALCULATED-DESIGNED BY: VINH LAO
CHECKED BY: KEVIN LEE
REVISED BY
DATE REVISED

LAST REVISION 00-00-00
DATE PLOTTED => 09-OCT-2013
TIME PLOTTED => 12:46

Dist	COUNTY	ROUTE	POST MILES TOTAL PROJECT	SHEET No.	TOTAL SHEETS
03	Pla	89	T8.6/12.8	28	77

REGISTERED CIVIL ENGINEER 10-7-13 DATE

PLANS APPROVAL DATE

REGISTERED PROFESSIONAL ENGINEER KEVIN F. LEE No. 78077 Exp. 9-30-13 CIVIL STATE OF CALIFORNIA

THE STATE OF CALIFORNIA OR ITS OFFICERS OR AGENTS SHALL NOT BE RESPONSIBLE FOR THE ACCURACY OR COMPLETENESS OF SCANNED COPIES OF THIS PLAN SHEET.

NOTES:

1. EXACT LENGTH AND LOCATION OF THE PLASTIC PIPE TO BE DETERMINED IN THE FIELD BY THE ENGINEER.
2. GRAVEL-FILLED BAG ANCHORS TO BE PLACED AT INTERMEDIATE LOCATIONS AS DETERMINED BY ENGINEER.
3. USE FLEXIBLE PIPE OR RIGID PIPE WITH WATER TIGHT JOINTS AS NECESSARY TO FOLLOW CREEK ALIGNMENT.
4. CHECK DAMS IN DITCHES @ 80 FEET ON CENTER IN LIEU OF SILT FENCE.

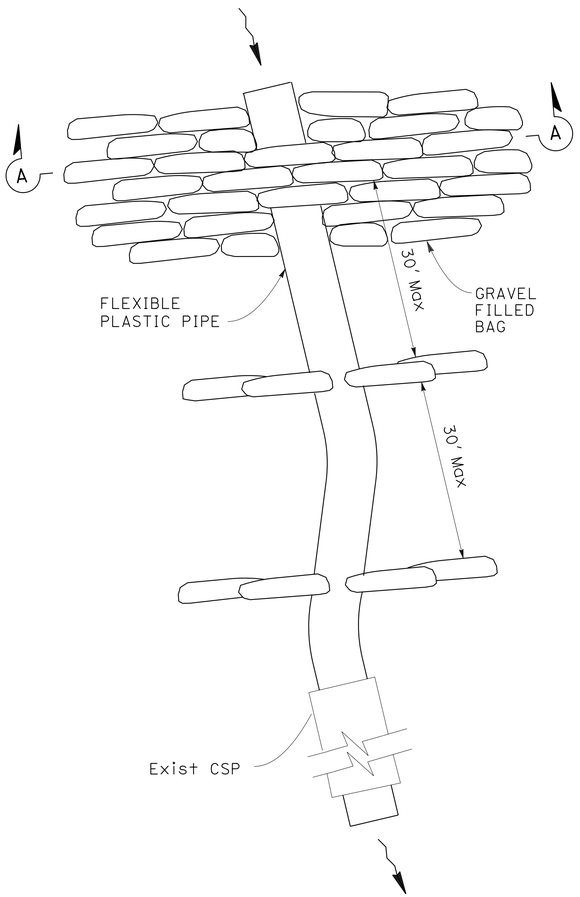

PLAN

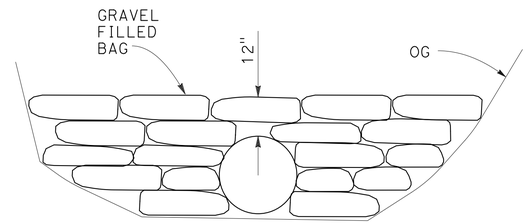

SECTION A-A

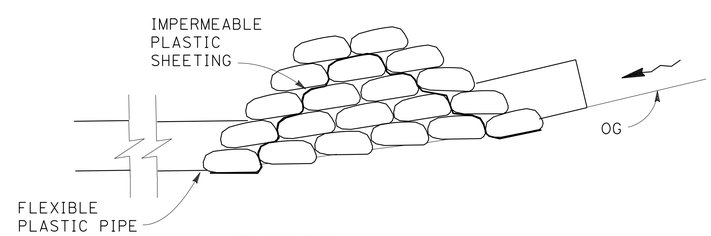

ELEVATION

TEMPORARY CLEAR WATER DIVERSION SYSTEM QUANTITIES PER LOCATION (N)

GRAVEL FILLED BAGS	FLEXIBLE PLASTIC PIPE	IMPERMEABLE PLASTIC SHEETING
EA	LF	SQFT
150	170	800

(N) NOT A PAY ITEM, FOR INFORMATIONAL PURPOSES ONLY.

TEMPORARY CLEAR WATER DIVERSION

TEMPORARY WATER POLLUTION CONTROL DETAILS

NO SCALE

WPCD-1

STATE OF CALIFORNIA - DEPARTMENT OF TRANSPORTATION
Caltrans
NORTH REGION
DIVISION OF ENGINEERING

FUNCTIONAL SUPERVISOR: KEN KEATON

CALCULATED-DESIGNED BY: XX KEVIN LEE

CHECKED BY

REVISED BY

DATE REVISED

LAST REVISION 00-00-00

DATE PLOTTED => 09-OCT-2013
TIME PLOTTED => 12:46

Dist	COUNTY	ROUTE	POST MILES TOTAL PROJECT	SHEET No.	TOTAL SHEETS
03	Pla	89	T8.6/12.8	29	77

REGISTERED CIVIL ENGINEER 10-7-13 DATE

10-7-13
PLANS APPROVAL DATE

REGISTERED PROFESSIONAL ENGINEER KEVIN F. LEE No. 78077 Exp. 9-30-13 CIVIL STATE OF CALIFORNIA

THE STATE OF CALIFORNIA OR ITS OFFICERS OR AGENTS SHALL NOT BE RESPONSIBLE FOR THE ACCURACY OR COMPLETENESS OF SCANNED COPIES OF THIS PLAN SHEET.

NOTES:
1. GRATE ELEVATION SHOWN ARE DEPRESSED 0.1'.
2. NO DEPRESSION IN THIS DRAINAGE UNIT.

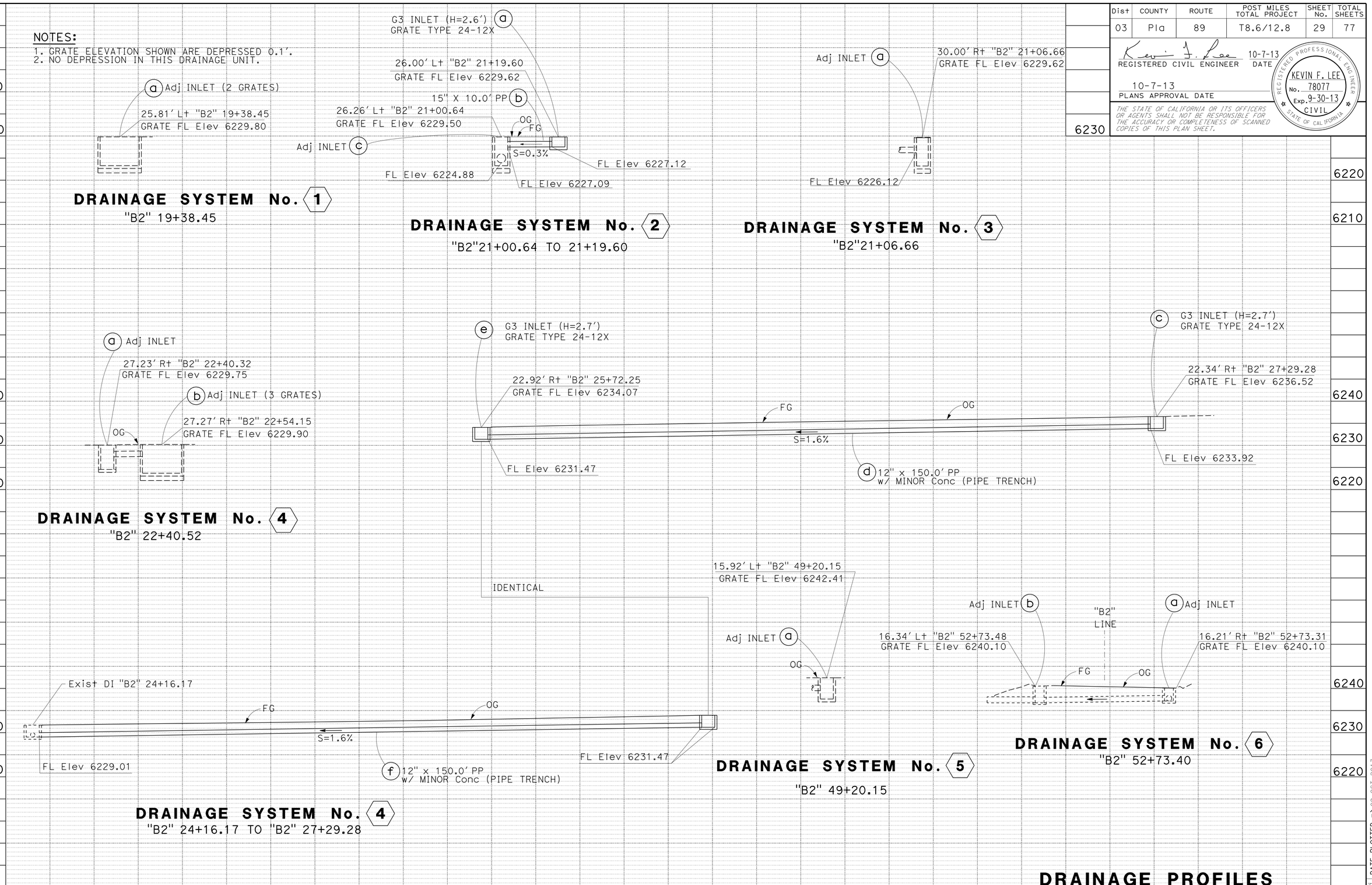

DRAINAGE PROFILES

SCALE: Horiz 1"=10'
Vert 1"=10'

DP-1

STATE OF CALIFORNIA - DEPARTMENT OF TRANSPORTATION
NORTH REGION
DIVISION OF ENGINEERING

FUNCTIONAL SUPERVISOR: KEN KEATON
CALCULATED-DESIGNED BY: VINH LAO
CHECKED BY: KEVIN LEE
REVISED BY / DATE REVISED

LAST REVISION 00-00-00
DATE PLOTTED => 09-OCT-2013
TIME PLOTTED => 12:46

Dist	COUNTY	ROUTE	POST MILES TOTAL PROJECT	SHEET No.	TOTAL SHEETS
03	Pla	89	T8.6/12.8	30	77

REGISTERED CIVIL ENGINEER 10-7-13 DATE

10-7-13
PLANS APPROVAL DATE

REGISTERED PROFESSIONAL ENGINEER KEVIN F. LEE No. 78077 Exp. 9-30-13 CIVIL STATE OF CALIFORNIA

THE STATE OF CALIFORNIA OR ITS OFFICERS OR AGENTS SHALL NOT BE RESPONSIBLE FOR THE ACCURACY OR COMPLETENESS OF SCANNED COPIES OF THIS PLAN SHEET.

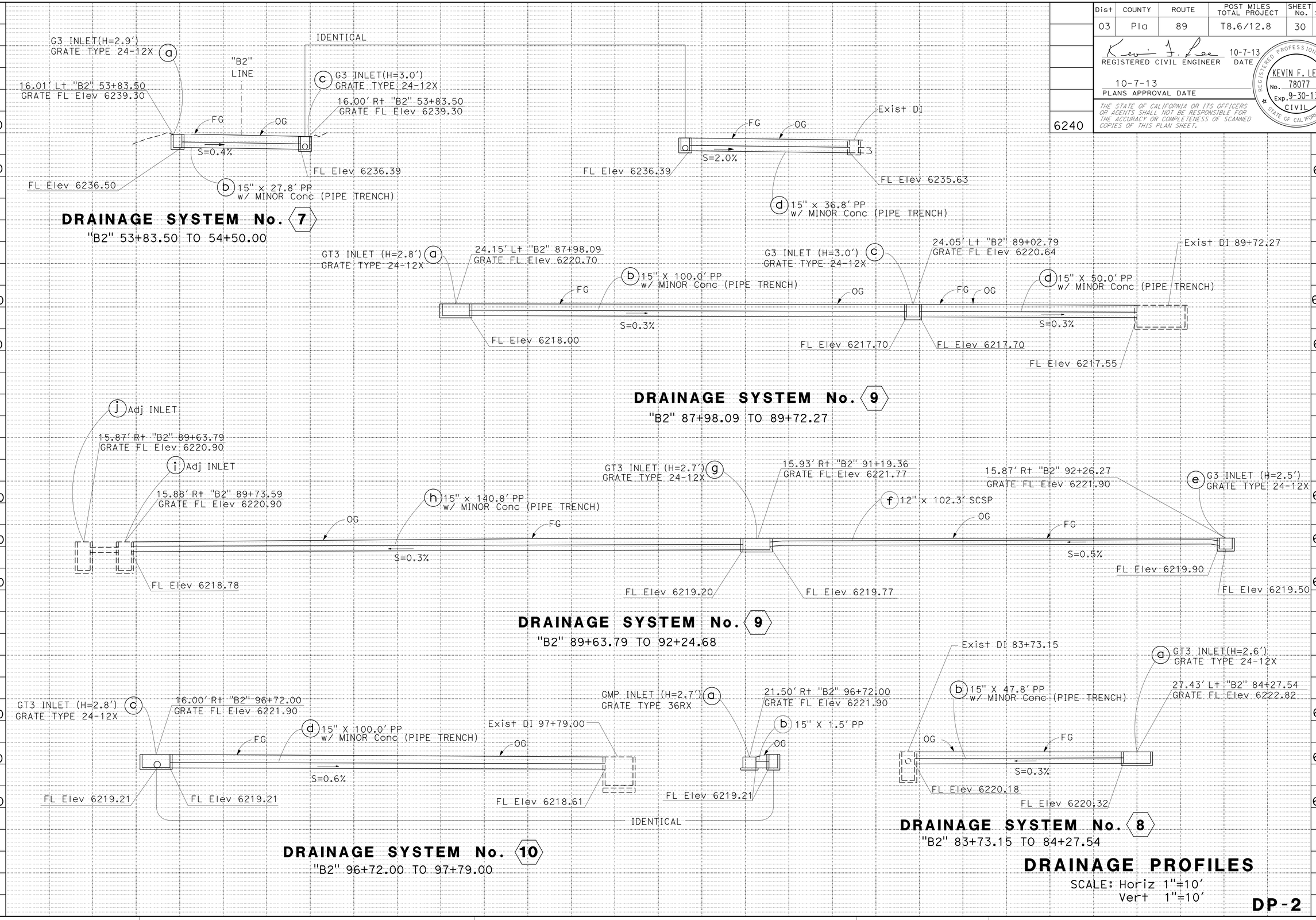

DRAINAGE PROFILES

SCALE: Horiz 1"=10'
Vert 1"=10'

DP-2

STATE OF CALIFORNIA - DEPARTMENT OF TRANSPORTATION
NORTH REGION
DIVISION OF ENGINEERING
Caltrans

FUNCTIONAL SUPERVISOR: KEN KEATON
CALCULATED-DESIGNED BY: VINH LAO
CHECKED BY: KEVIN LEE
REVISED BY
DATE REVISED

LAST REVISION 00-00-00
DATE PLOTTED => 09-OCT-2013
TIME PLOTTED => 12:46

Dist	COUNTY	ROUTE	POST MILES TOTAL PROJECT	SHEET No.	TOTAL SHEETS
03	Pla	89	T8.6/12.8	31	77

REGISTERED CIVIL ENGINEER 10-7-13 DATE

10-7-13
PLANS APPROVAL DATE

REGISTERED PROFESSIONAL ENGINEER KEVIN F. LEE No. 78077 Exp. 9-30-13 CIVIL STATE OF CALIFORNIA

THE STATE OF CALIFORNIA OR ITS OFFICERS OR AGENTS SHALL NOT BE RESPONSIBLE FOR THE ACCURACY OR COMPLETENESS OF SCANNED COPIES OF THIS PLAN SHEET.

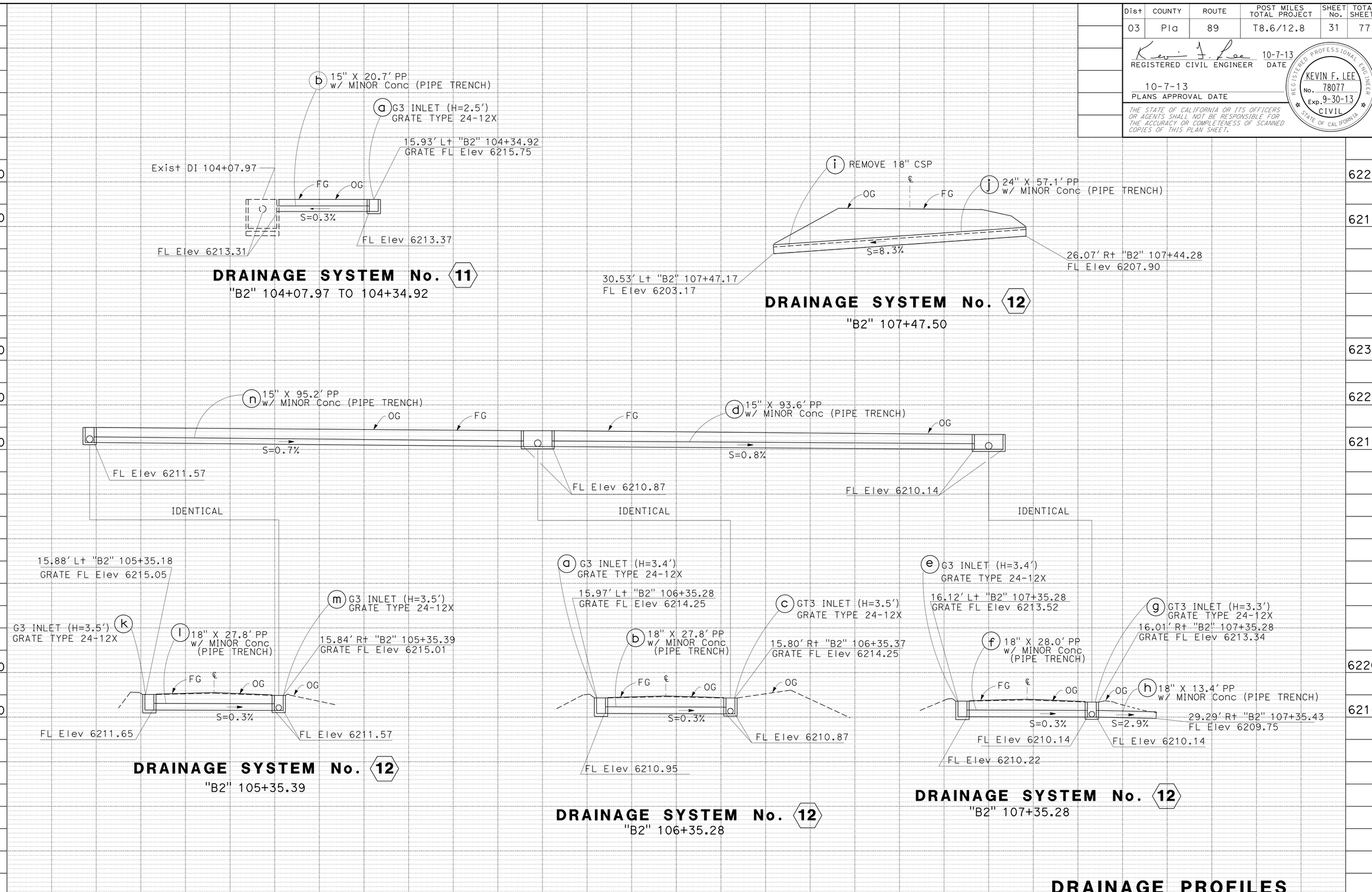

DRAINAGE PROFILES

SCALE: Horiz 1"=10'
Vert 1"=10'

DP-3

STATE OF CALIFORNIA - DEPARTMENT OF TRANSPORTATION
NORTH REGION
DIVISION OF ENGINEERING

FUNCTIONAL SUPERVISOR: KEN KEATON
CALCULATED-DESIGNED BY: VINH LAO
CHECKED BY: KEVIN LEE
REVISED BY / DATE REVISED

LAST REVISION 00-00-00
DATE PLOTTED => 09-OCT-2013
TIME PLOTTED => 12:46

Dist	COUNTY	ROUTE	POST MILES TOTAL PROJECT	SHEET No.	TOTAL SHEETS
03	Pla	89	T8.6/12.8	32	77

REGISTERED CIVIL ENGINEER 10-7-13 DATE

10-7-13
PLANS APPROVAL DATE

REGISTERED PROFESSIONAL ENGINEER KEVIN F. LEE No. 78077 Exp. 9-30-13 CIVIL STATE OF CALIFORNIA

THE STATE OF CALIFORNIA OR ITS OFFICERS OR AGENTS SHALL NOT BE RESPONSIBLE FOR THE ACCURACY OR COMPLETENESS OF SCANNED COPIES OF THIS PLAN SHEET.

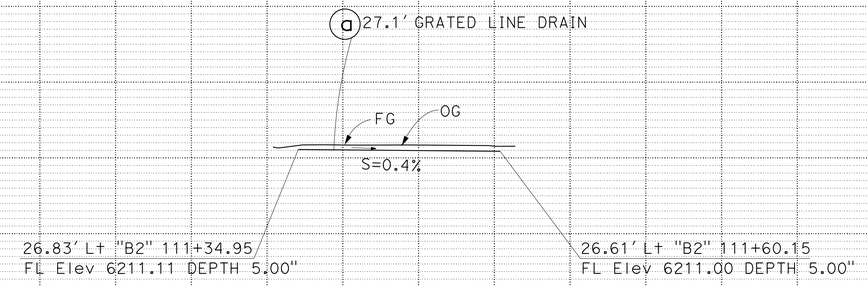

DRAINAGE SYSTEM No. 14
"B2" 111+36.00 TO 111+59.90

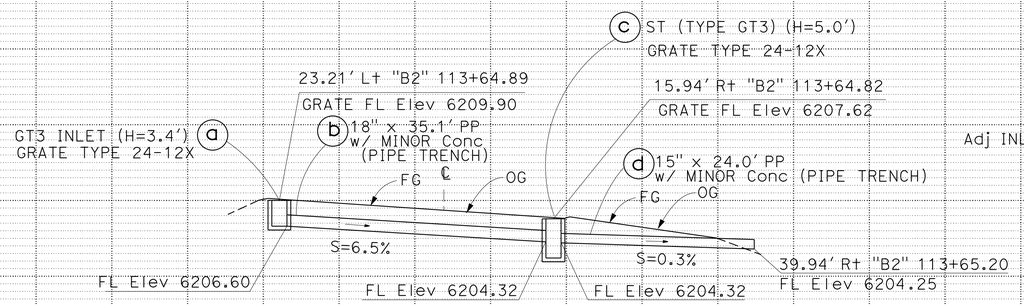

DRAINAGE SYSTEM No. 15
"B2" 113+64.76

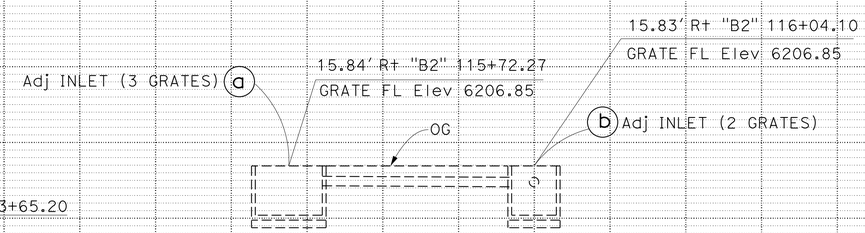

DRAINAGE SYSTEM No. 16
"B2" 115+72.44 TO 116+03.86

DRAINAGE PROFILES

SCALE: Horiz 1"=10'
Vert 1"=10'

DP-4

STATE OF CALIFORNIA - DEPARTMENT OF TRANSPORTATION
NORTH REGION
DIVISION OF ENGINEERING
Caltrans

FUNCTIONAL SUPERVISOR: KEN KEATON
CALCULATED-DESIGNED BY: VINH LAO
CHECKED BY: KEVIN LEE
REVISED BY
DATE REVISED

LAST REVISION 00-00-00 | DATE PLOTTED => 09-OCT-2013 | TIME PLOTTED => 12:46

Dist	COUNTY	ROUTE	POST MILES TOTAL PROJECT	SHEET No.	TOTAL SHEETS
03	Pla	89	T8.6/12.8	33	77

REGISTERED CIVIL ENGINEER 10-7-13 DATE

10-7-13
PLANS APPROVAL DATE

REGISTERED PROFESSIONAL ENGINEER KEVIN F. LEE No. 78077 Exp. 9-30-13 CIVIL STATE OF CALIFORNIA

THE STATE OF CALIFORNIA OR ITS OFFICERS OR AGENTS SHALL NOT BE RESPONSIBLE FOR THE ACCURACY OR COMPLETENESS OF SCANNED COPIES OF THIS PLAN SHEET.

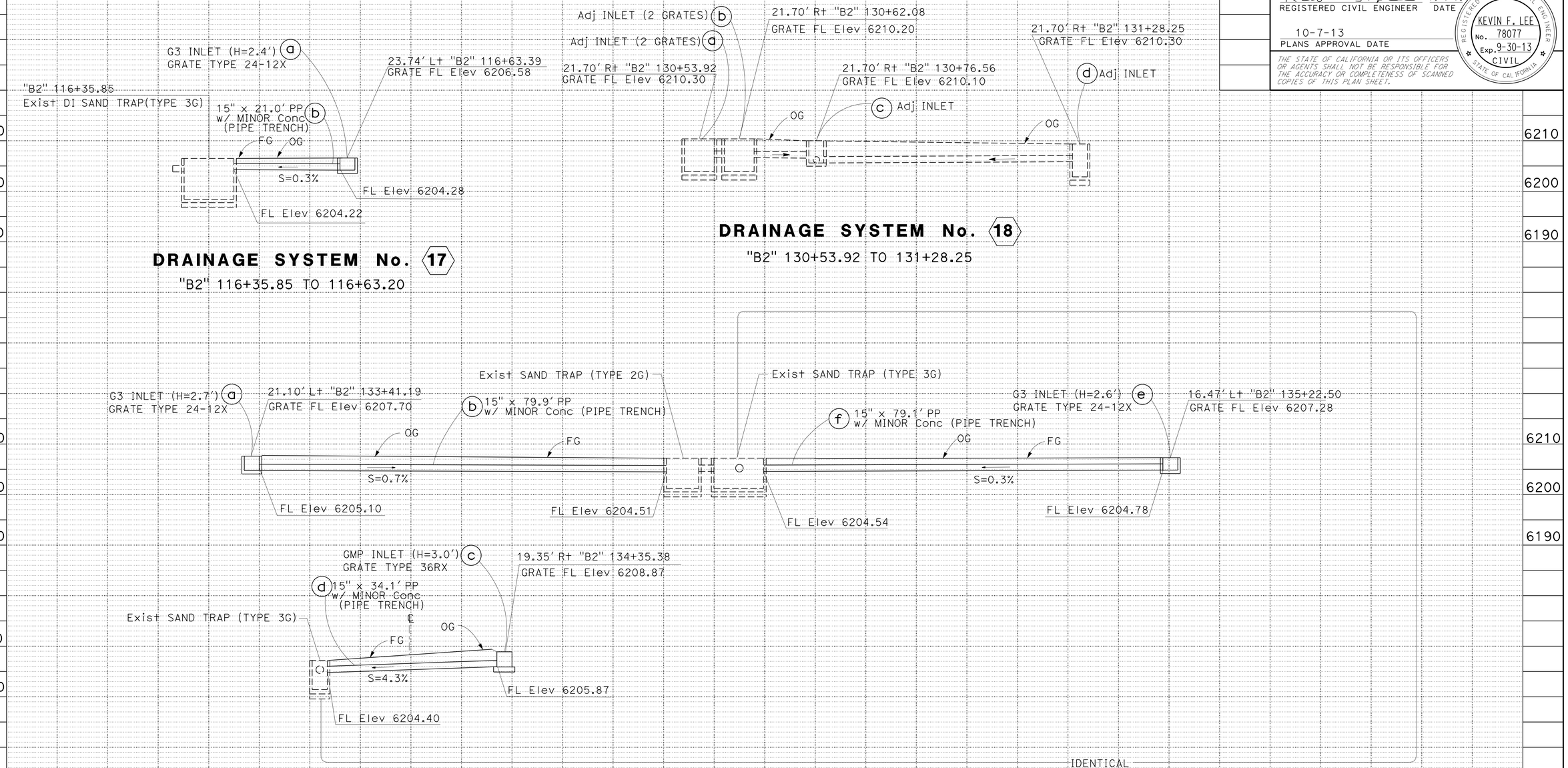

DRAINAGE PROFILES

SCALE: Horiz 1"=10'
Vert 1"=10'

DP-5

STATE OF CALIFORNIA - DEPARTMENT OF TRANSPORTATION
NORTH REGION
DIVISION OF ENGINEERING
Caltrans

FUNCTIONAL SUPERVISOR: KEN KEATON
CALCULATED-DESIGNED BY: VINH LAO
CHECKED BY: KEVIN LEE
REVISED BY | DATE REVISED

LAST REVISION 00-00-00
DATE PLOTTED => 09-OCT-2013
TIME PLOTTED => 12:46

Dist	COUNTY	ROUTE	POST MILES TOTAL PROJECT	SHEET No.	TOTAL SHEETS
03	Pla	89	T8.6/12.8	34	77

REGISTERED CIVIL ENGINEER 10-7-13 DATE

10-7-13
PLANS APPROVAL DATE

REGISTERED PROFESSIONAL ENGINEER KEVIN F. LEE No. 78077 Exp. 9-30-13 CIVIL STATE OF CALIFORNIA

THE STATE OF CALIFORNIA OR ITS OFFICERS OR AGENTS SHALL NOT BE RESPONSIBLE FOR THE ACCURACY OR COMPLETENESS OF SCANNED COPIES OF THIS PLAN SHEET.

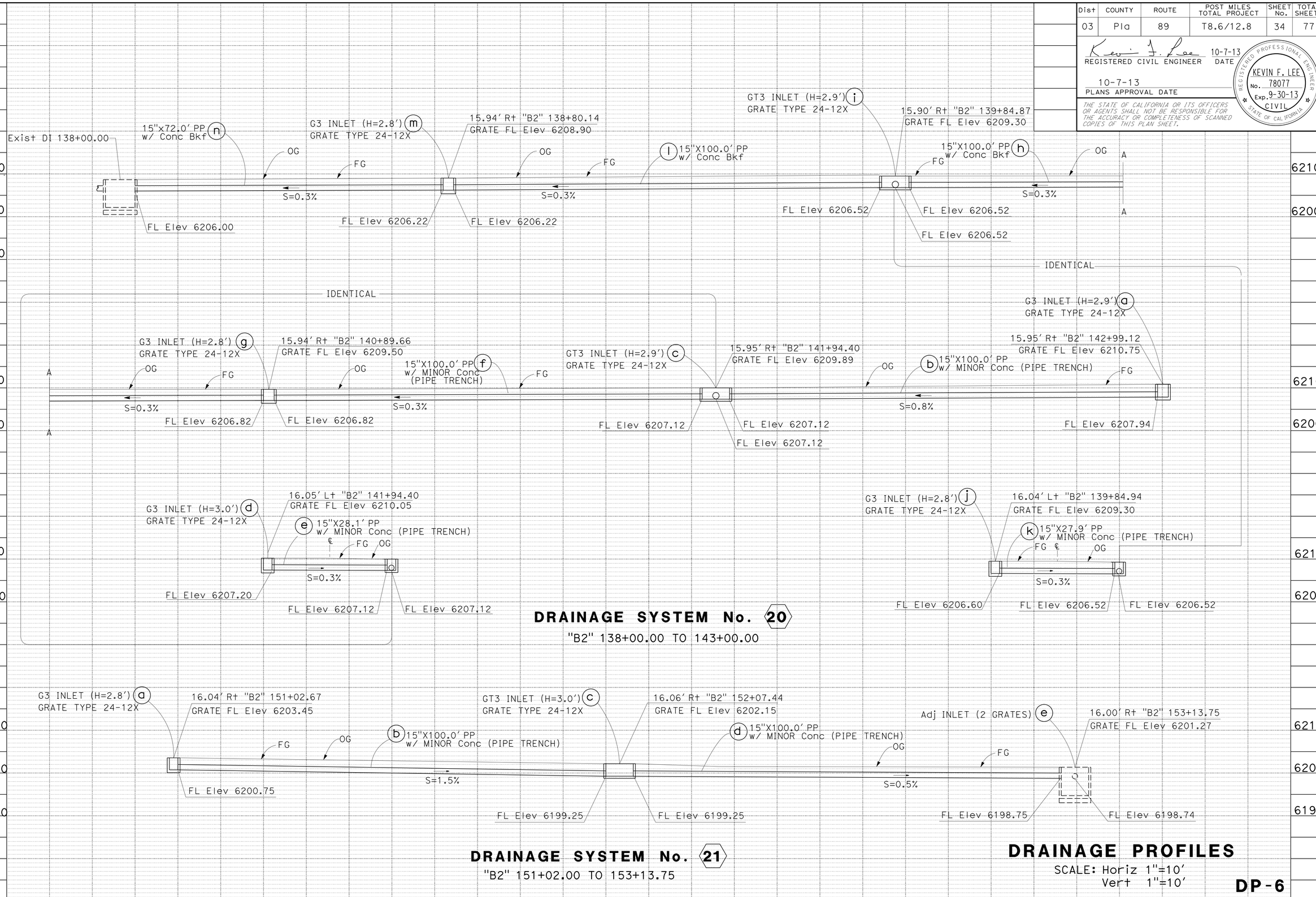

DRAINAGE PROFILES

SCALE: Horiz 1"=10'
Vert 1"=10'

DP-6

STATE OF CALIFORNIA - DEPARTMENT OF TRANSPORTATION
NORTH REGION
DIVISION OF ENGINEERING
Caltrans

FUNCTIONAL SUPERVISOR: KEN KEATON
CALCULATED-DESIGNED BY: VINH LAO
CHECKED BY: KEVIN LEE
REVISED BY / DATE REVISED

LAST REVISION 00-00-00 DATE PLOTTED => 09-OCT-2013 TIME PLOTTED => 12:46

Dist	COUNTY	ROUTE	POST MILES TOTAL PROJECT	SHEET No.	TOTAL SHEETS
03	Pla	89	T8.6/12.8	35	77

REGISTERED CIVIL ENGINEER 10-7-13 DATE

10-7-13
PLANS APPROVAL DATE

REGISTERED PROFESSIONAL ENGINEER KEVIN F. LEE No. 78077 Exp. 9-30-13 CIVIL STATE OF CALIFORNIA

THE STATE OF CALIFORNIA OR ITS OFFICERS OR AGENTS SHALL NOT BE RESPONSIBLE FOR THE ACCURACY OR COMPLETENESS OF SCANNED COPIES OF THIS PLAN SHEET.

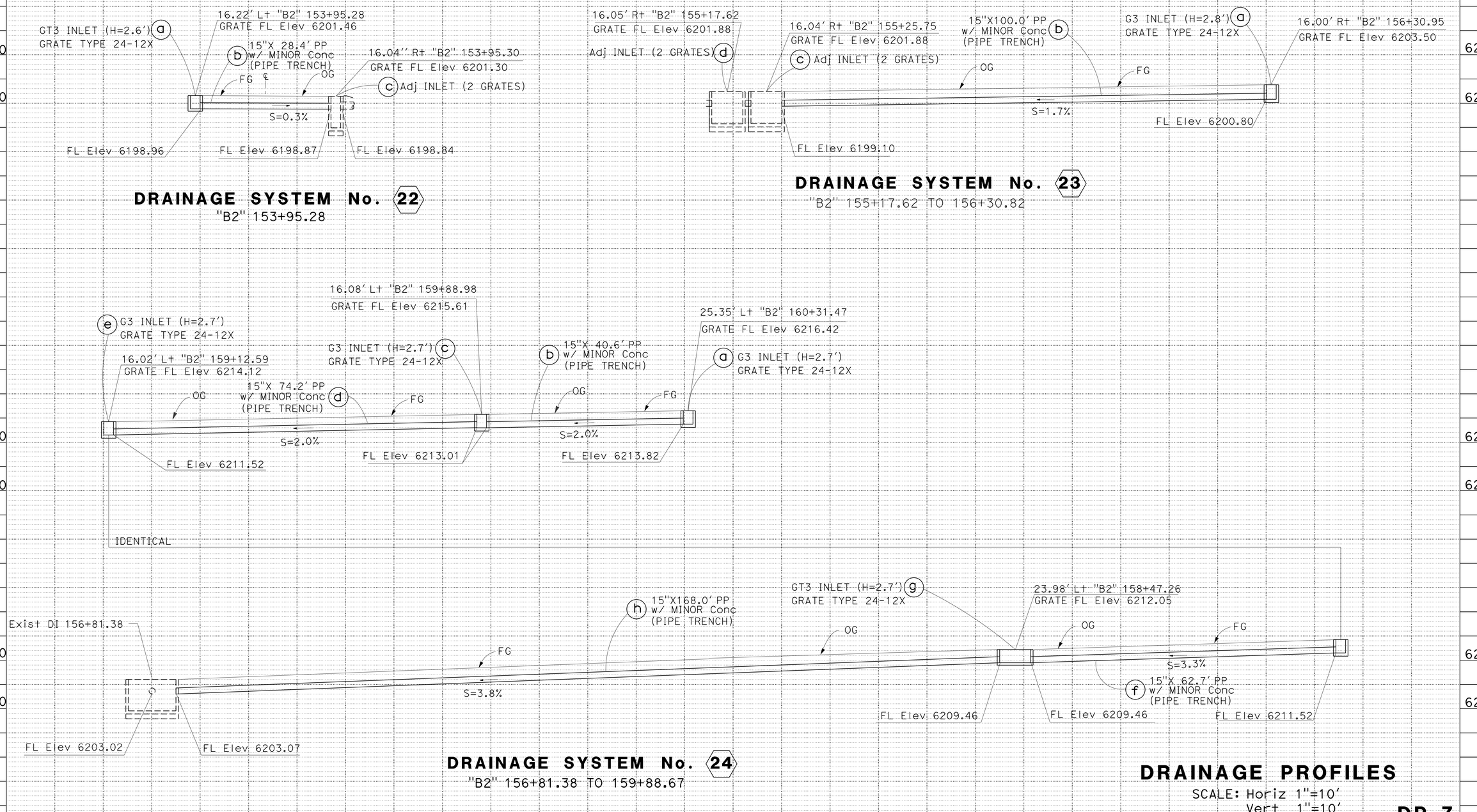

DRAINAGE PROFILES

SCALE: Horiz 1"=10'
Vert 1"=10'

DP-7

STATE OF CALIFORNIA - DEPARTMENT OF TRANSPORTATION
NORTH REGION
DIVISION OF ENGINEERING
Caltrans

FUNCTIONAL SUPERVISOR: KEN KEATON
CALCULATED-DESIGNED BY: VINH LAO
CHECKED BY: KEVIN LEE
REVISED BY
DATE REVISED

LAST REVISION 00-00-00
DATE PLOTTED => 09-OCT-2013
TIME PLOTTED => 12:46

Dist	COUNTY	ROUTE	POST MILES TOTAL PROJECT	SHEET No.	TOTAL SHEETS
03	Pla	89	T8.6/12.8	36	77

REGISTERED CIVIL ENGINEER 10-7-13 DATE

10-7-13
PLANS APPROVAL DATE

REGISTERED PROFESSIONAL ENGINEER
KEVIN F. LEE
No. 78077
Exp. 9-30-13
CIVIL
STATE OF CALIFORNIA

THE STATE OF CALIFORNIA OR ITS OFFICERS OR AGENTS SHALL NOT BE RESPONSIBLE FOR THE ACCURACY OR COMPLETENESS OF SCANNED COPIES OF THIS PLAN SHEET.

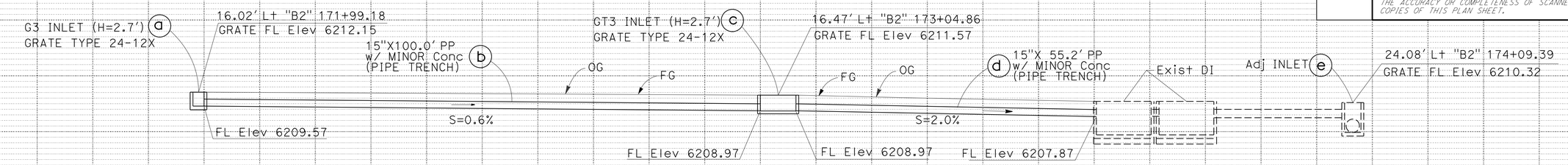

DRAINAGE SYSTEM No. 25

"B2" 172+00 TO 173+74.66

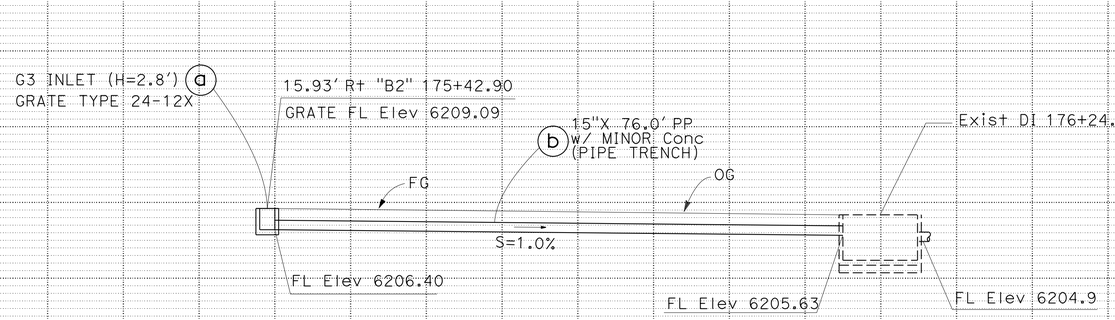

DRAINAGE SYSTEM No. 26

"B2" 175+42.95 TO 176+24.84

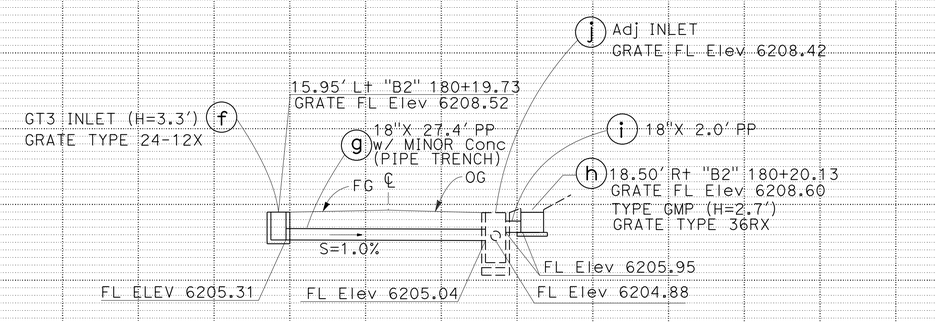

DRAINAGE SYSTEM No. 27

"B2" 180+19.74

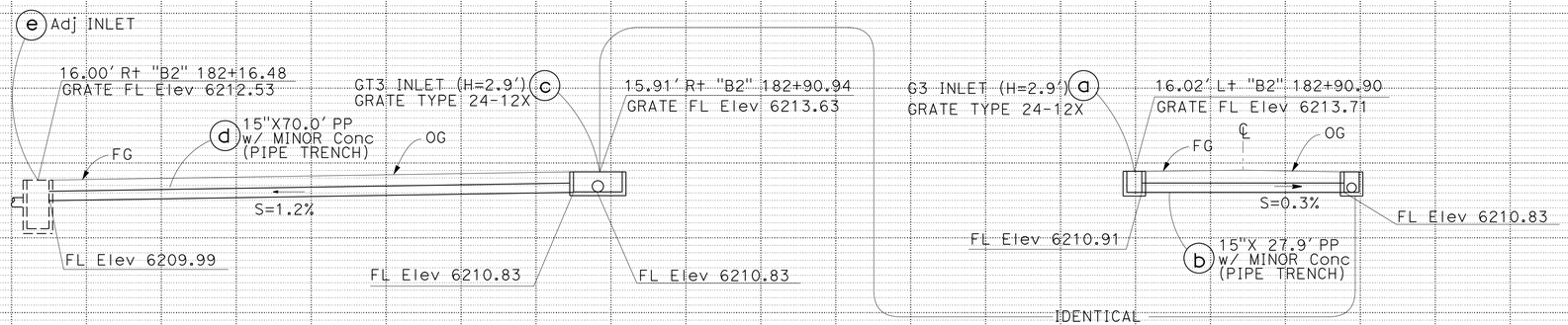

DRAINAGE SYSTEM No. 27

"B2" 182+16.48 TO 182+90.89

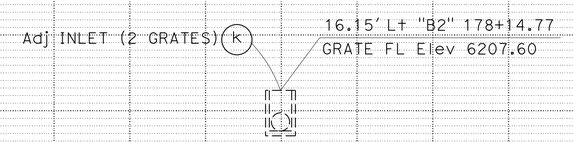

DRAINAGE SYSTEM No. 27

"B2" 178+14.77

DRAINAGE PROFILES

SCALE: Horiz 1"=10'
Vert 1"=10'

DP-8

REVISED BY | DATE REVISED
VINH LAO | KEVIN LEE
CALCULATED-DESIGNED BY | CHECKED BY
FUNCTIONAL SUPERVISOR: KEN KEATON

STATE OF CALIFORNIA - DEPARTMENT OF TRANSPORTATION
NORTH REGION
DIVISION OF ENGINEERING
Caltrans

LAST REVISION 00-00-00 | DATE PLOTTED => 09-OCT-2013 | TIME PLOTTED => 12:46

Dist	COUNTY	ROUTE	POST MILES TOTAL PROJECT	SHEET No.	TOTAL SHEETS
03	Pla	89	T8.6/12.8	37	77

REGISTERED CIVIL ENGINEER 10-7-13 DATE

10-7-13
PLANS APPROVAL DATE

REGISTERED PROFESSIONAL ENGINEER KEVIN F. LEE No. 78077 Exp. 9-30-13 CIVIL STATE OF CALIFORNIA

THE STATE OF CALIFORNIA OR ITS OFFICERS OR AGENTS SHALL NOT BE RESPONSIBLE FOR THE ACCURACY OR COMPLETENESS OF SCANNED COPIES OF THIS PLAN SHEET.

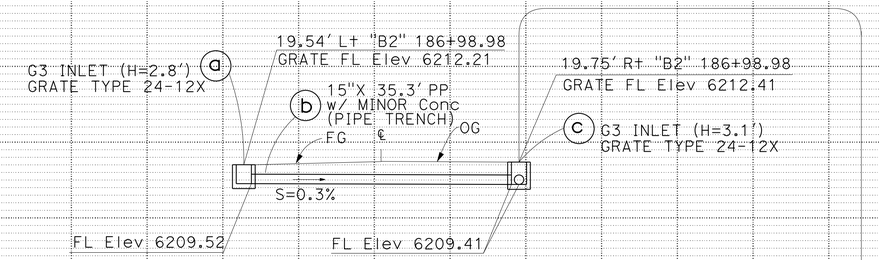

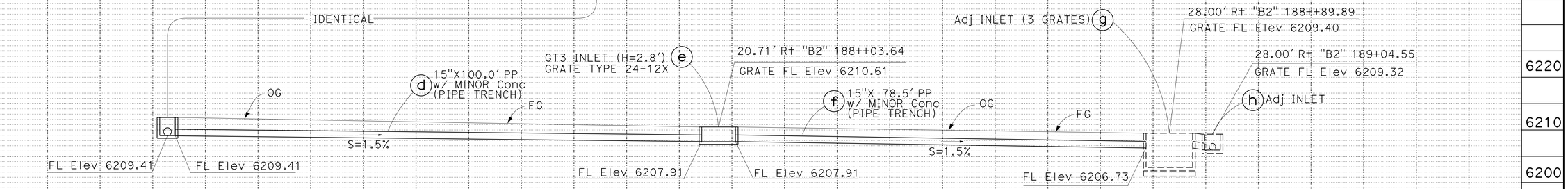

DRAINAGE SYSTEM No. 28

"B2" 187+00.00 TO 189+04.55

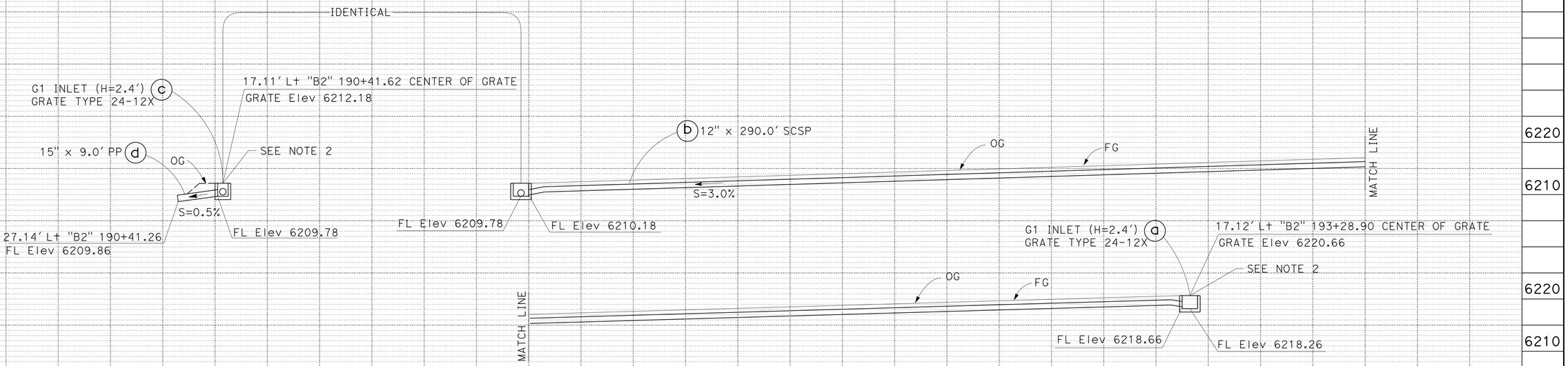

DRAINAGE SYSTEM No. 29

"B2" 190+41.62 TO 193+28.92

DRAINAGE PROFILES

SCALE: Horiz 1"=10'
Vert 1"=10'

DP-9

REVISED BY | DATE REVISED
VINH LAO | KEVIN LEE
CALCULATED-DESIGNED BY | CHECKED BY
FUNCTIONAL SUPERVISOR: KEN KEATON

STATE OF CALIFORNIA - DEPARTMENT OF TRANSPORTATION
NORTH REGION
DIVISION OF ENGINEERING
Caltrans

LAST REVISION 00-00-00 | DATE PLOTTED => 09-OCT-2013 | TIME PLOTTED => 12:46

Dist	COUNTY	ROUTE	POST MILES TOTAL PROJECT	SHEET No.	TOTAL SHEETS
03	Pla	89	T8.6/12.8	38	77

REGISTERED CIVIL ENGINEER 10-7-13 DATE

10-7-13
PLANS APPROVAL DATE

REGISTERED PROFESSIONAL ENGINEER KEVIN F. LEE No. 78077 Exp. 9-30-13 CIVIL STATE OF CALIFORNIA

THE STATE OF CALIFORNIA OR ITS OFFICERS OR AGENTS SHALL NOT BE RESPONSIBLE FOR THE ACCURACY OR COMPLETENESS OF SCANNED COPIES OF THIS PLAN SHEET.

NOTES:

1. FOR DETAILS NOT SHOWN SEE STANDARD PLAN D102, UNDERDRAINS.
2. A CONSTRUCTION SEAM IN THE FILTER FABRIC AND PERMEABLE MATERIAL MAY OCCUR DOWNSTREAM OF THE CENTER PPP.
3. UNDERDRAIN CLEANOUT COVER SHALL BE H/20 RATED OR EQUIVALENT.
4. UNDERDRAIN CLEANOUT COVER SHALL BE DEPRESSED 0.05′.

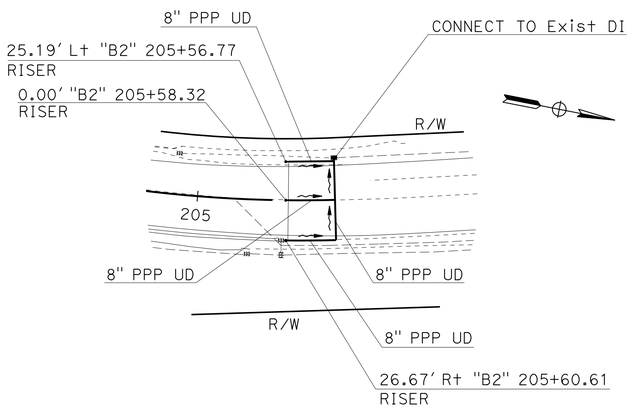

PLAN

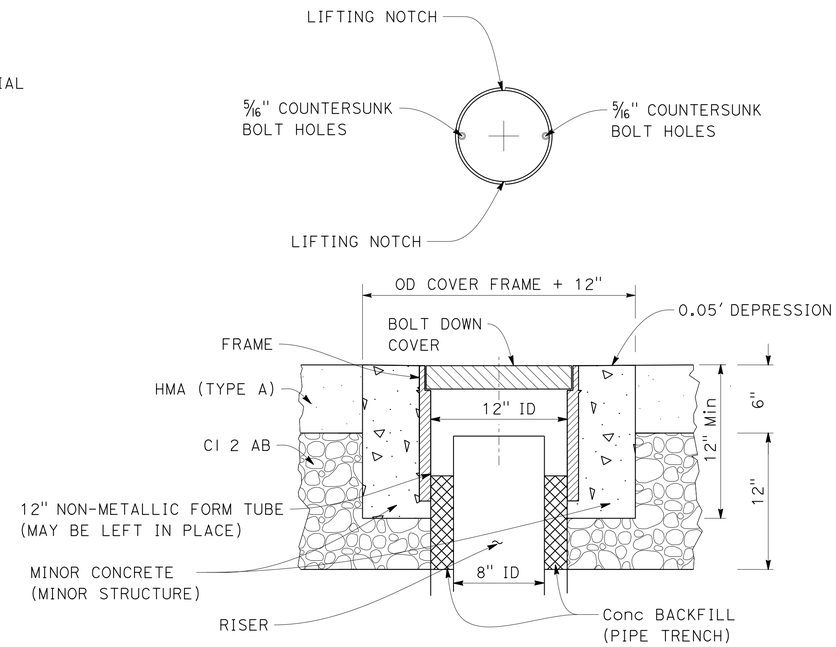

UNDERDRAIN CLEANOUT COVER

UNDERDRAIN SYSTEM ITEMS

LOCATION	8" PERFORATED PLASTIC PIPE UNDERDRAIN	CLASS 1 PERMEABLE MATERIAL (BLANKET)	(N) FILTER FABRIC	GEOSYNTHETIC PAVEMENT INTERLAYER (PAVING FABRIC)	(N) 12" CORRUGATED STEEL PIPE RISER (.079" THICK)	UNDERDRAIN MARKER	(N) UNDERDRAIN CLEANOUT COVER	CONCRETE BACKFILL (PIPE TRENCH)	MINOR CONCRETE (MINOR STRUCTURE)
	LF	CY	SQYD	SQYD	EA	EA	EA	CY	CY
LEFT	29.8	2.8	12.2		1		1	0.002	0.17
CENTER	30.8				1		1	0.002	0.17
RIGHT	32.0	3.2	14.1		1	1	1	0.002	0.17
CROSS DRAIN	53.1	59.1	196.0	194.6					
TOTAL	145.7	65.1*	222.3	194.6*	3	1*	3	0.006*	0.51*

(N) NOT A SEPARATE PAY ITEM, FOR INFORMATION ONLY
* FOR TOTAL QUANTITIES, SEE DRAINAGE QUANTITIES

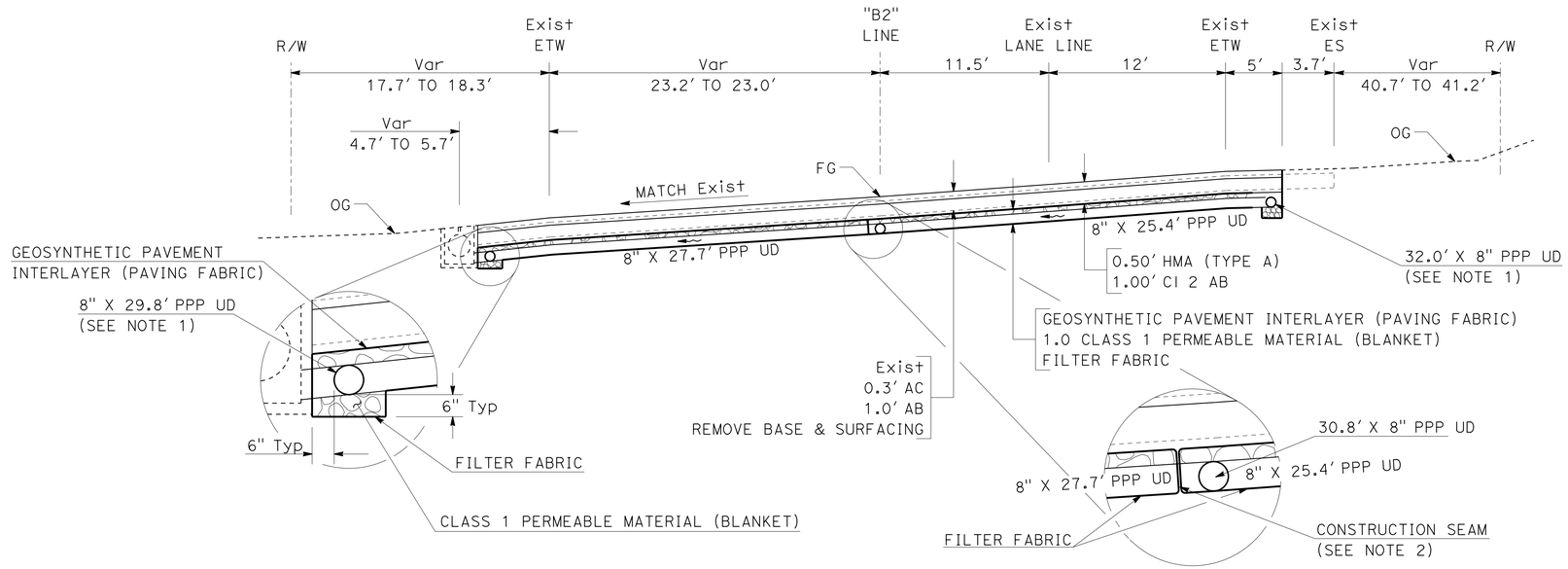

PROFILE

30

UNDERDRAIN SYSTEM

Sta "B2" 205+59.95 To Sta "B2" 205+95.09

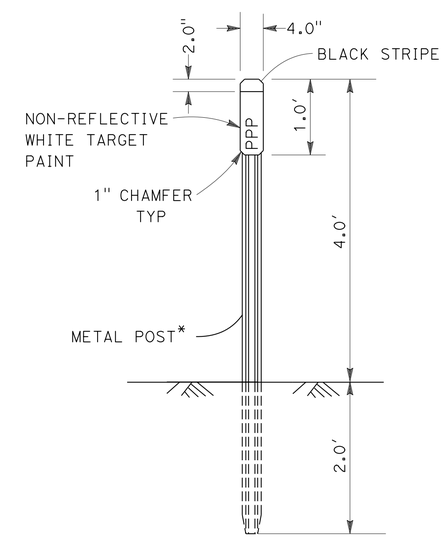

* SEE STANDARD PLAN A73B FOR METAL POST DETAILS

UNDERDRAIN MARKER

DRAINAGE DETAILS

NO SCALE

DD-1

STATE OF CALIFORNIA - DEPARTMENT OF TRANSPORTATION
NORTH REGION DIVISION OF ENGINEERING
Caltrans

FUNCTIONAL SUPERVISOR: KEN KEATON
CALCULATED-DESIGNED BY: KEVIN LEE
CHECKED BY: VINH LAO
REVISED BY
DATE REVISED

LAST REVISION 00-00-00
DATE PLOTTED => 09-OCT-2013
TIME PLOTTED => 12:46

Dist	COUNTY	ROUTE	POST MILES TOTAL PROJECT	SHEET No.	TOTAL SHEETS
03	Pla	89	T8.6/12.8	39	77

REGISTERED CIVIL ENGINEER 10-7-13 DATE

10-7-13
PLANS APPROVAL DATE

REGISTERED PROFESSIONAL ENGINEER KEVIN F. LEE No. 78077 Exp. 9-30-13 CIVIL STATE OF CALIFORNIA

THE STATE OF CALIFORNIA OR ITS OFFICERS OR AGENTS SHALL NOT BE RESPONSIBLE FOR THE ACCURACY OR COMPLETENESS OF SCANNED COPIES OF THIS PLAN SHEET.

NOTES:

1. DRILL AND BOND #4 REBAR 4" MINIMUM INTO EXISTING INLET.
2. FOR DETAILS NOT SHOWN SEE STANDARD PLAN D72, RSP D73, D73A, D74A AND D74B DRAINAGE INLETS.
3. SLURRY CEMEMT MAY HAVE BEEN USED TO BACKFILL AROUND THE EXISTING DRAINAGE INLETS.
4. SAWCUT THE ENTIRE PAVED PERIMETER OF THE TRENCH PRIOR TO EXCAVATION.

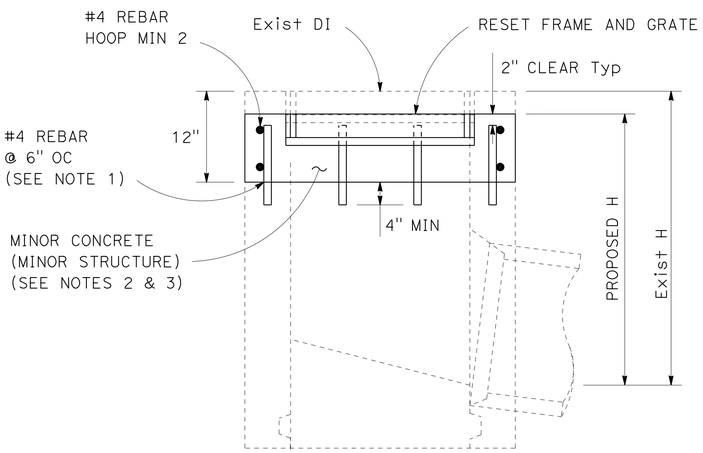

DRAINAGE SYSTEM No.	DRAINAGE UNIT
1	a
2	c
3	a
4	a
4	b
5	a
6	a
6	b
9	i
9	j
16	a
16	b
18	a
18	b
18	c
18	d
21	e
22	c
23	c
23	d
25	e
27	e
27	j
27	k
28	g
28	h

ADJUST INLET

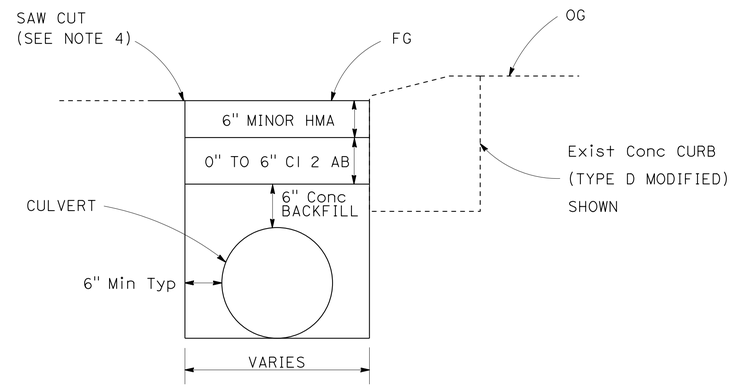

TRENCH DETAIL (WITH CURB)

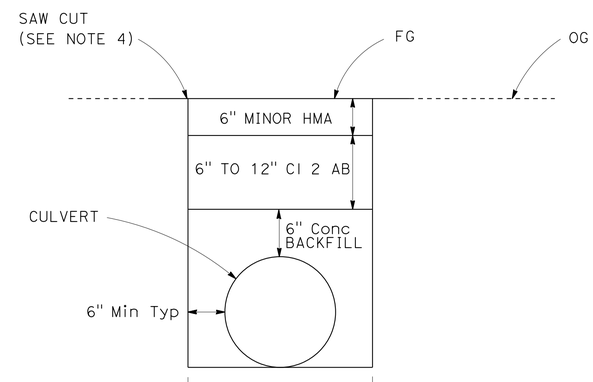

TRENCH DETAIL CROSS CULVERT

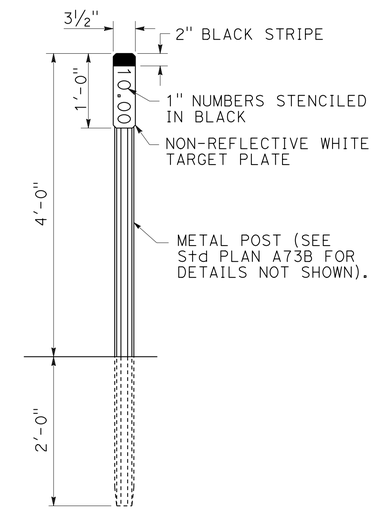

MARKER (CULVERT)

NOTE: EXACT LOCATION TO BE DETERMINED BY THE ENGINEER.

MARKER (CULVERT)

DRAINAGE SYSTEM No.	STATION	NUMERAL ON TARGET PLATE	LOCATION	
			FNBT	FSBT
			EA	EA
19	134+35	10.92	1	
20	141+94	11.07	1	1
27	182+91	11.84	1	1
28	187+00	11.92	1	

DRAINAGE DETAILS

NO SCALE

DD-2

STATE OF CALIFORNIA - DEPARTMENT OF TRANSPORTATION
Caltrans
NORTH REGION
DIVISION OF ENGINEERING

FUNCTIONAL SUPERVISOR: KEN KEATON
CALCULATED-DESIGNED BY: KEVIN LEE
CHECKED BY: VINH LAO
REVISED BY
DATE REVISED

LAST REVISION 00-00-00
DATE PLOTTED => 09-OCT-2013
TIME PLOTTED => 12:46

Dist	COUNTY	ROUTE	POST MILES TOTAL PROJECT	SHEET No.	TOTAL SHEETS
03	Pla	89	T8.6/12.8	40	77

REGISTERED CIVIL ENGINEER 10-7-13 DATE

10-7-13
PLANS APPROVAL DATE

REGISTERED PROFESSIONAL ENGINEER KEVIN F. LEE No. 78077 Exp. 9-30-13 CIVIL STATE OF CALIFORNIA

THE STATE OF CALIFORNIA OR ITS OFFICERS OR AGENTS SHALL NOT BE RESPONSIBLE FOR THE ACCURACY OR COMPLETENESS OF SCANNED COPIES OF THIS PLAN SHEET.

NOTES:

1. FOR DETAILS NOT SHOWN, SEE Std PLANS D74A.
2. FOR SIZE AND LOCATION, OF PIPES, GRATES, AND INLET HEIGHTS, SEE LAYOUT PLANS AND DRAINAGE PROFILES
3. MATCH ADJACENT CURB TYPE
4. ELEVATION SHOWN ON DRAINAGE PROFILES REFERS TO THIS POINT. TOP OF SAND TRAP GRADE SHALL MATCH GUTTER GRADE.

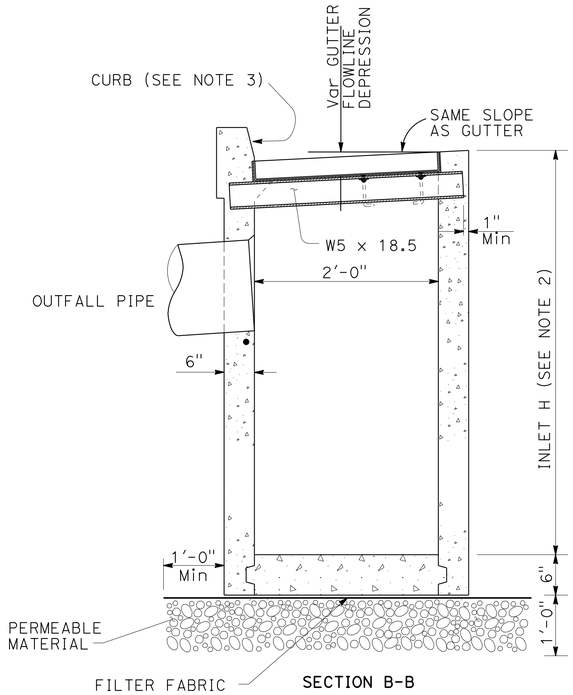

SECTION B-B

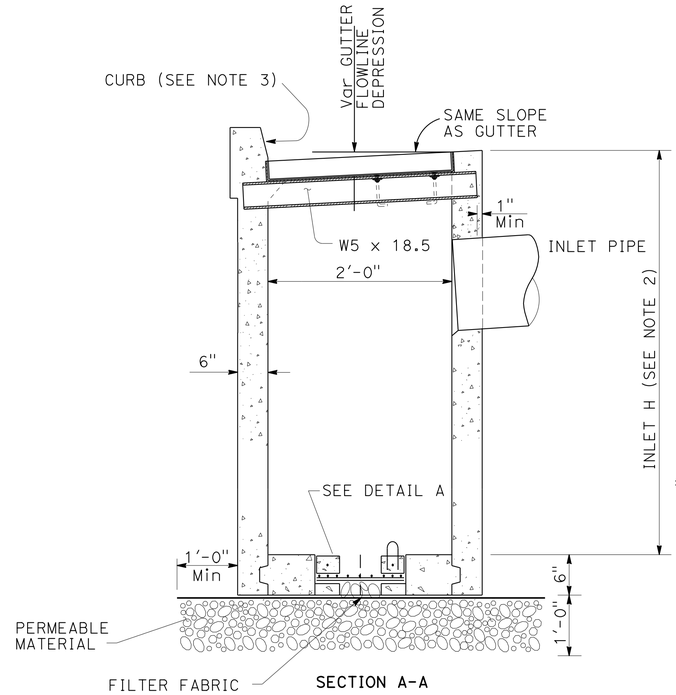

SECTION A-A

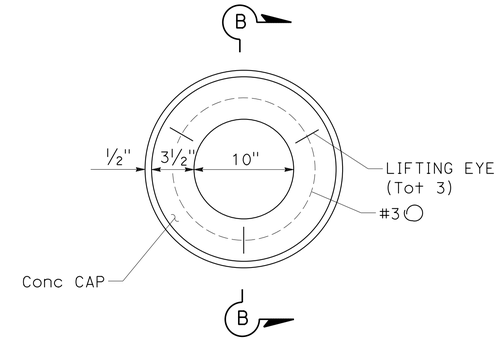

PLAN

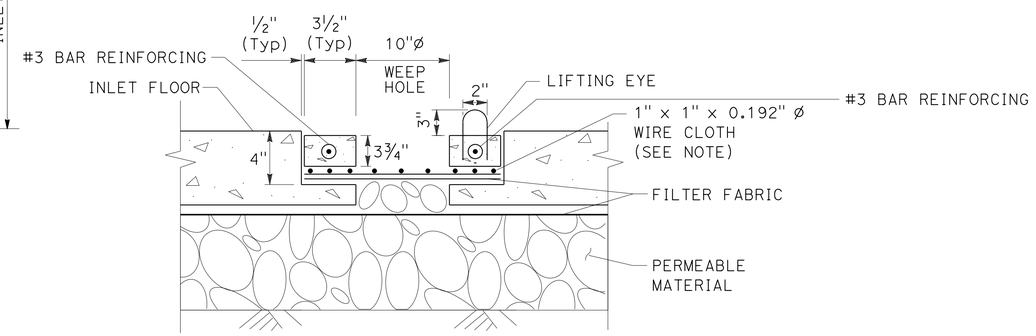

SECTION B-B

DETAIL A

NOTE: WIRE CLOTH MUST BE HOT-DIPPED GALVANIZED OR STAINLESS STEEL

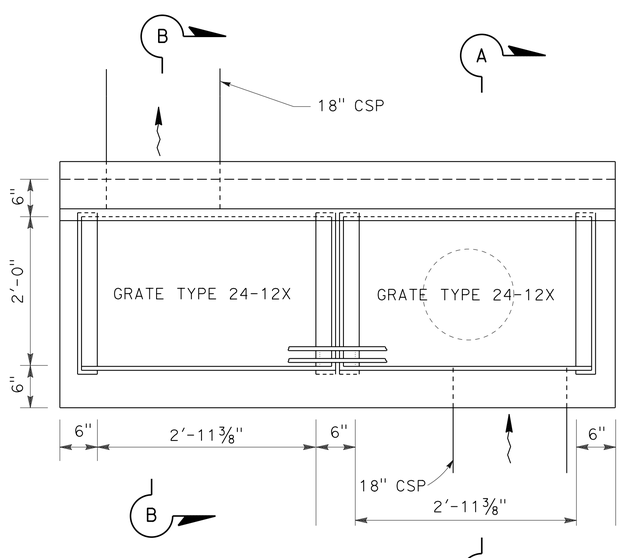

PLAN

SAND TRAP (TYPE GT3)

DRAINAGE DETAILS

NO SCALE

DD-3

STATE OF CALIFORNIA - DEPARTMENT OF TRANSPORTATION
Caltrans NORTH REGION DIVISION OF ENGINEERING

FUNCTIONAL SUPERVISOR: KEN KEAGON

CALCULATED-DESIGNED BY: KEVIN LEE
CHECKED BY: VINH LAO

REVISED BY | DATE REVISED

LAST REVISION 00-00-00 | DATE PLOTTED => 09-OCT-2013 | TIME PLOTTED => 12:46

Dist	COUNTY	ROUTE	POST MILES TOTAL PROJECT	SHEET No.	TOTAL SHEETS
03	Pla	89	T8.6/12.8	41	77

REGISTERED CIVIL ENGINEER 10-7-13 DATE

10-7-13
PLANS APPROVAL DATE

REGISTERED PROFESSIONAL ENGINEER KEVIN F. LEE No. 78077 Exp. 9-30-13 CIVIL STATE OF CALIFORNIA

THE STATE OF CALIFORNIA OR ITS OFFICERS OR AGENTS SHALL NOT BE RESPONSIBLE FOR THE ACCURACY OR COMPLETENESS OF SCANNED COPIES OF THIS PLAN SHEET.

NOTES:

1. SEE STANDARD PLAN D98B. 6 INCH GRATE SLOT-SECTION WITH THE TAPERED SPACER OPTION IS REQUIRED.
2. HDPES IS HIGH DENSITY POLYETHYLENE PIPE WITH A SMOOTH INTERIOR.

DRAINAGE ITEMS

LAYOUT SHEET	DRAINAGE SYSTEM No.	DRAINAGE UNIT	GRATED LINE DRAIN	MARKER (CULVERT)	PLASTIC PIPE 12" PP	PLASTIC PIPE 15" PP	PLASTIC PIPE 18" PP	PLASTIC PIPE 24" PP	12" SLOTTED CORRUGATED STEEL PIPE (.079" THICK)	36" CORRUGATED STEEL PIPE INLET (.079" THICK)	DRAINAGE INLETS INLET TYPE	DRAINAGE INLETS FRAME GRATE TYPE	DRAINAGE INLETS (N) HEIGHT OF INLET "H"	DRAINAGE INLETS ADJUST INLET	DRAINAGE INLETS MINOR CONCRETE (MINOR STRUCTURE)	DRAINAGE INLETS MISCELLANEOUS IRON AND STEEL	DRAINAGE INLETS DRAINAGE INLET MARKER	REMOVE CONCRETE CURB	REMOVE CONCRETE (GUTTER)	REMOVE CONCRETE (CURB AND GUTTER)	REMOVE CULVERT	MINOR CONCRETE (GUTTER DEPRESSION)	CONCRETE BACKFILL (PIPE TRENCH)	MINOR CONCRETE (CURB)	MINOR CONCRETE (GUTTER)	MINOR CONCRETE (CURB AND GUTTER)	BAR REINFORCING STEEL (EPOXY COATED)	CLASS 2 AGGREGATE BASE	MINOR HOT MIX ASPHALT	CLASS 1 PERMEABLE MATERIAL (BLANKET)	GEOSYNTHETIC PAVEMENT INTERLAYER (PAVING FABRIC)	UNDERDRAIN MARKER	DESCRIPTION	STATION	DRAINAGE SYSTEM No.	DRAINAGE UNIT
			LF	EA	LF	LF	LF	LF	LF	LF			LF	EA	CY	LB	EA	LF	LF	LF	LF	CY	CY	CY	CY	CY	LB	CY	TON	CY	SQYD	EA				
L-1	1	a												1			1	13				0.93		0.53									ADJUST INLET (2 GRATES)	"B2" 19+38.45	1	a
	2	a									G3	24-12X	2.6		0.95	239	1	10				0.82		0.41									G3 INLET GRATE TYPE 24-12X	"B2" 21+19.60	2	a
		b				10.0																	1.00						0.83				15" x 10.0' PP			b
		c												1			1	10				0.82		0.41									ADJUST INLET			c
	3	a												1			1	10				0.82		0.41									ADJUST INLET	"B2" 21+06.66	3	a
	4	a												1			1	11				0.82		0.45									ADJUST INLET	"B2" 22+40.32	4	a
		b												1			1	16				1.04		0.65									ADJUST INLET (3 GRATES)			b
		c									G3	24-12X	2.7		0.96	239	1	8				0.82		0.41									G3 INLET GRATE TYPE 24-12X	"B2" 27+29.28		c
		d			150.0																		3.97					5.56	11.11				12" x 150.0' PP			d
		e									G3	24-12X	2.7		0.96	239	1	8				0.82		0.41									G3 INLET GRATE TYPE 24-12X	"B2" 25+72.25		e
		f			150.0																		3.97					5.56	11.11				12" x 150.0' PP			f
L-2	5	a												1			1	5				0.82		0.36									ADJUST INLET	"B2" 49+20.15	5	a
	6	a												1			1	10				0.82		0.84									ADJUST INLET	"B2" 52+73.48	6	a
		b												1			1	14				0.82		1.22									ADJUST INLET			b
	7	a									G3	24-12X	2.9		1.00	239	1	12				0.82		1.03									G3 INLET GRATE TYPE 24-12X	"B2" 53+83.50	7	a
		b				27.8																	2.79					1.39	2.32				15" x 27.8' PP			b
		c									G3	24-12X	3.0		1.03	239	1	12				0.82		1.03									G3 INLET GRATE TYPE 24-12X			c
		d				36.8																	3.70					1.84	3.07				15" x 36.8' PP			d
L-4	8	a									GT3	24-12X	2.6		1.55	478	1	16				0.93		0.65									GT3 INLET GRATE TYPE 24-12X	"B2" 84+27.54	8	a
		b				47.8																	4.80					1.99	3.98				15" x 47.8' PP			b
	9	a									GT3	24-12X	2.8		1.69	478	1	16				0.93		0.65									GT3 INLET GRATE TYPE 24-12X	"B2" 87+98.09	9	a
		b				100.0																	10.04					4.17	8.33				15" x 100.0' PP			b
		c									G3	24-12X	3.0		1.03	239	1	10				0.82		0.41									G3 INLET GRATE TYPE 24-12X			c
		d				50.0																	5.02					2.08	4.17				15" x 50.0' PP			d
		e									G3	24-12X	2.5		0.90	239	1	10				0.82		0.41									G3 INLET GRATE TYPE 24-12X			e
		f							102.3										103				2.71		9.65		633		7.58				12" x 102.3' SLOTTED DRAIN			f
		g									GT3	24-12X	2.7		1.62	478	1	14				0.93		0.57									GT3 INLET GRATE TYPE 24-12X			g
		h				140.8																	14.14					2.35	11.73				15" x 140.8' PP			h
		i												1			1	8				0.82		0.33									ADJUST INLET			i
		j												1			1	8				0.82		0.33									ADJUST INLET			j
SHEET TOTAL					300.0	413.2			102.3					10	11.69	3107	20	221	103			17.06	52.14	11.51	9.65		633	24.94	64.23							

(N) NOT A SEPARATE PAY ITEM, FOR INFORMATION ONLY.

DRAINAGE QUANTITIES

DQ-1

REVISED BY | DATE REVISED
KEVIN LEE | VINH LAO
CALCULATED-DESIGNED BY | CHECKED BY
FUNCTIONAL SUPERVISOR: KEN KEATON

STATE OF CALIFORNIA - DEPARTMENT OF TRANSPORTATION
Caltrans
NORTH REGION
DIVISION OF ENGINEERING

LAST REVISION 00-00-00 | DATE PLOTTED => 09-OCT-2013 | TIME PLOTTED => 12:46

Dist	COUNTY	ROUTE	POST MILES TOTAL PROJECT	SHEET No.	TOTAL SHEETS
03	Pla	89	T8.6/12.8	42	77

REGISTERED CIVIL ENGINEER 10-7-13 DATE

10-7-13
PLANS APPROVAL DATE

REGISTERED PROFESSIONAL ENGINEER KEVIN F. LEE No. 78077 Exp. 9-30-13 CIVIL STATE OF CALIFORNIA

THE STATE OF CALIFORNIA OR ITS OFFICERS OR AGENTS SHALL NOT BE RESPONSIBLE FOR THE ACCURACY OR COMPLETENESS OF SCANNED COPIES OF THIS PLAN SHEET.

NOTES:

1. SEE STANDARD PLAN D98B. 6 INCH GRATE SLOT-SECTION WITH THE TAPERED SPACER OPTION IS REQUIRED.
2. HDPES IS HIGH DENSITY POLYETHYLENE PIPE WITH A SMOOTH INTERIOR.

DRAINAGE ITEMS

LAYOUT SHEET	DRAINAGE SYSTEM No.	DRAINAGE UNIT	GRATED LINE DRAIN	MARKER (CULVERT)	PLASTIC PIPE 12" PP	PLASTIC PIPE 15" PP	PLASTIC PIPE 18" PP	PLASTIC PIPE 24" PP	12" SLOTTED CORRUGATED STEEL PIPE (.079" THICK)	36" CORRUGATED STEEL PIPE INLET (.079" THICK)	DRAINAGE INLETS INLET TYPE	DRAINAGE INLETS FRAME GRATE TYPE	DRAINAGE INLETS (N) HEIGHT OF INLET "H"	DRAINAGE INLETS ADJUST INLET	DRAINAGE INLETS MINOR CONCRETE (MINOR STRUCTURE)	DRAINAGE INLETS MISCELLANEOUS IRON AND STEEL	DRAINAGE INLETS DRAINAGE INLET MARKER	REMOVE CONCRETE CURB	REMOVE CONCRETE (GUTTER)	REMOVE CONCRETE (CURB AND GUTTER)	REMOVE CULVERT	MINOR CONCRETE (GUTTER DEPRESSION)	CONCRETE BACKFILL (PIPE TRENCH)	MINOR CONCRETE (CURB)	MINOR CONCRETE (GUTTER)	MINOR CONCRETE (CURB AND GUTTER)	BAR REINFORCING STEEL (EPOXY COATED)	CLASS 2 AGGREGATE BASE	MINOR HOT MIX ASPHALT	CLASS 1 PERMEABLE MATERIAL (BLANKET)	GEOSYNTHETIC PAVEMENT INTERLAYER (PAVING FABRIC)	UNDERDRAIN MARKER	DESCRIPTION	STATION	DRAINAGE SYSTEM No.	DRAINAGE UNIT
			LF	EA	LF	LF	LF	LF	LF	LF			LF	EA	CY	LB	EA	LF	LF	LF	LF	CY	CY	CY	CY	CY	LB	CY	TON	CY	SQYD	EA				
L-5	10	a								3.2	GMP	36RX	2.7		0.24	215																	GMP INLET GRATE TYPE 36RX	"B2" 96+72.00	10	a
		b				1.5																											15" x 1.5' PP			b
		c									GT3	24-12X	2.8		1.69	478	1	16				0.93		0.65									GT3 INLET GRATE TYPE 24-12X			c
		d				100.0																	10.04					6.25	8.33				15" x 100.0' PP			d
	11	a									G3	24-12X	2.5		0.91	239	1	10				0.82		0.84									G3 INLET GRATE TYPE 24-12X	"B2" 104+34.92	11	a
		b				20.7																	2.08					0.70	1.73				15" x 20.7' PP			b
	12	a									G3	24-12X	3.4		1.12	239	1	8				0.82		0.33									G3 INLET GRATE TYPE 24-12X	"B2" 106+35.28	12	a
		b					27.8																3.33					2.57	2.57				18" x 27.8' PP			b
		c									GT3	24-12X	3.5		1.90	478	1	11				0.93		0.45									GT3 INLET GRATE TYPE 24-12X			c
		d				93.6																	9.40					6.34	7.80				15" x 93.6' PP			d
		e									G3	24-12X	3.4		1.12	239	1	8				0.82		0.33									G3 INLET GRATE TYPE 24-12X			e
		f					28.0																3.35					2.59	2.59				18" x 28.0' PP			f
		g									GT3	24-12X	3.3		1.83	478	1	11				0.93		0.45									GT3 INLET GRATE TYPE 24-12X			g
		h					13.4																1.26										18" x 13.4' PP			h
		i																			57.1												REMOVE 18" x 57.1' SCP			i
		j						57.1															9.22					6.34	6.34				24" x 57.1' PP			j
		k									G3	24-12X	3.5		1.14	239	1	8				0.82		0.65									G3 INLET GRATE TYPE 24-12X			k
		l					27.8																3.33					2.06	2.57				18" x 27.8' PP			l
		m									G3	24-12X	3.5		1.14	239	1	8				0.82		0.33									G3 INLET GRATE TYPE 24-12X			m
		n				95.2																	9.56					6.45	7.93				15" x 95.2' PP			n
	13	SYSTEM No. 13 OMITTED																																	13	
L-6	14	a	27.1																														27.1' GRATED LINE DRAIN		14	a
	15	a									GT3	24-12X	3.4		1.87	478	1	11				0.93											GT3 INLET GRATE TYPE 24-12X	"B2" 113+64.89	15	a
		b					35.1																4.20					2.76	3.25				18" x 35.1' PP			b
		c									GT3	24-12X	5.0		2.43	478	1	11				0.93		0.45									SAND TRAP (TYPE GT3)			c
		d				24.0																	2.41										15" x 24.0' PP			d
	16	a												1			1	14				1.04		0.57									ADJUST INLET (3 GRATES)	"B2" 115+72.27	16	a
		b												1			1	11				0.93		0.45									ADJUST INLET (2 GRATES)			b
SHEET TOTAL			27.1			335.0	132.1	57.1		3.2				2	15.39	3800	12	127			57.1	10.72	58.18	5.50				36.06	43.11							

(N) NOT A SEPARATE PAY ITEM, FOR INFORMATION ONLY.

DRAINAGE QUANTITIES

DQ-2

STATE OF CALIFORNIA - DEPARTMENT OF TRANSPORTATION
Caltrans
NORTH REGION
DIVISION OF ENGINEERING

FUNCTIONAL SUPERVISOR: KEN KEATON
CALCULATED-DESIGNED BY: KEVIN LEE
CHECKED BY: VINH LAO
REVISED BY
DATE REVISED

LAST REVISION 00-00-00
DATE PLOTTED => 09-OCT-2013
TIME PLOTTED => 12:46

Dist	COUNTY	ROUTE	POST MILES TOTAL PROJECT	SHEET No.	TOTAL SHEETS
03	Pla	89	T8.6/12.8	43	77

REGISTERED CIVIL ENGINEER 10-7-13 DATE

10-7-13
PLANS APPROVAL DATE

REGISTERED PROFESSIONAL ENGINEER KEVIN F. LEE No. 78077 Exp. 9-30-13 CIVIL STATE OF CALIFORNIA

THE STATE OF CALIFORNIA OR ITS OFFICERS OR AGENTS SHALL NOT BE RESPONSIBLE FOR THE ACCURACY OR COMPLETENESS OF SCANNED COPIES OF THIS PLAN SHEET.

NOTES:

1. SEE STANDARD PLAN D98B. 6 INCH GRATE SLOT-SECTION WITH THE TAPERED SPACER OPTION IS REQUIRED.
2. HDPES IS HIGH DENSITY POLYETHYLENE PIPE WITH A SMOOTH INTERIOR.

DRAINAGE ITEMS

LAYOUT SHEET	DRAINAGE SYSTEM No.	DRAINAGE UNIT	GRATED LINE DRAIN	MARKER (CULVERT)	PLASTIC PIPE 12" PP	PLASTIC PIPE 15" PP	PLASTIC PIPE 18" PP	PLASTIC PIPE 24" PP	12" SLOTTED CORRUGATED STEEL PIPE (.079" THICK)	36" CORRUGATED STEEL PIPE INLET (.079" THICK)	DRAINAGE INLETS INLET TYPE	DRAINAGE INLETS FRAME GRATE TYPE	DRAINAGE INLETS (N) HEIGHT OF INLET "H"	DRAINAGE INLETS ADJUST INLET	DRAINAGE INLETS MINOR CONCRETE (MINOR STRUCTURE)	DRAINAGE INLETS MISCELLANEOUS IRON AND STEEL	DRAINAGE INLETS DRAINAGE INLET MARKER	REMOVE CONCRETE CURB	REMOVE CONCRETE (GUTTER)	REMOVE CONCRETE (CURB AND GUTTER)	REMOVE CULVERT	MINOR CONCRETE (GUTTER DEPRESSION)	CONCRETE BACKFILL (PIPE TRENCH)	MINOR CONCRETE (CURB)	MINOR CONCRETE (GUTTER)	MINOR CONCRETE (CURB AND GUTTER)	BAR REINFORCING STEEL (EPOXY COATED)	CLASS 2 AGGREGATE BASE	MINOR HOT MIX ASPHALT	CLASS 1 PERMEABLE MATERIAL (BLANKET)	GEOSYNTHETIC PAVEMENT INTERLAYER (PAVING FABRIC)	UNDERDRAIN MARKER	DESCRIPTION	STATION	DRAINAGE SYSTEM No.	DRAINAGE UNIT
			LF	EA	LF	LF	LF	LF	LF	LF			LF	EA	CY	LB	EA	LF	LF	LF	LF	CY	CY	CY	CY	CY	LB	CY	TON	CY	SQYD	EA				
L-6	17	a									G3	24-12X	2.4		0.89	239	1	8				0.82		0.65									G3 INLET GRATE TYPE 24-12X	"B2" 116+63.39	17	a
		b				21.0																	2.11						1.75				15" x 21.0' PP			b
L-7	18	a												1			1	10				0.93		0.41									ADJUST INLET 2 GRATES	"B2" 130+53.92	18	a
		b												1			1	10				0.93		0.41									ADJUST INLET 2 GRATES			b
		c												1			1	8				0.82		0.33									ADJUST INLET			c
		d												1			1	8				0.82		0.33									ADJUST INLET			d
	19	a									G3	24-12X	2.7		0.96	239	1	8				0.82		0.33									G3 INLET GRATE TYPE 24-12X	"B2" 133+41.19	19	a
L-8		b				79.9																	8.02					3.66	6.66				15" x 79.9' PP			b
		c		1						3.5	GMP	36RX	3.0		0.23	215																	GMP INLET GRATE TYPE 36RX			c
		d				34.1																	3.43					1.99	2.84				15" x 34.1' PP			d
		e									G3	24-12X	2.6		0.93	239	1	8				0.82		0.33									G3 INLET GRATE TYPE 24-12X			e
		f				79.1																	7.94					1.99	6.59				15" x 79.1' PP			f
	20	a									G3	24-12X	2.9		1.00	239	1	8				0.82		0.33									G3 INLET GRATE TYPE 24-12X	"B2" 142+99.12	20	a
		b				100.0														100			10.04			5.90		7.78	3.70				15" x 100.0' PP			b
		c		1							GT3	24-12X	2.8		1.69	478	1	11				0.93		0.45									GT3 INLET GRATE TYPE 24-12X			c
		d		1							G3	24-12X	3.0		1.03	239	1	8				0.82		0.33									G3 INLET GRATE TYPE 24-12X			d
		e				28.1																	2.82					1.17	2.34				15" x 28.1' PP			e
		f				100.0												25		75			10.04	1.02		4.42		4.17	2.78				15" x 100.0' PP			f
		g									G3	24-12X	2.8		0.98	239	1	8				0.82		0.33									G3 INLET GRATE TYPE 24-12X			g
		h				100.0																	10.04					2.71	8.33				15" x 100.0' PP			h
		i									GT3	24-12X	2.9		1.69	478	1	11				0.93		0.45									GT3 INLET GRATE TYPE 24-12X			i
		j									G3	24-12X	2.8		1.00	239	1	8				0.82		0.33									G3 INLET GRATE TYPE 24-12X			j
		k				27.9																	2.80					1.16	2.33				15" x 27.9' PP			k
		l				100.0																	10.04					4.17	8.33				15" x 100.0' PP			l
		m									G3	24-12X	2.8		0.98	239	1	8				0.82		0.47									G3 INLET GRATE TYPE 24-12X			m
		n				72.0																	7.23					3.00	6.00				15" x 72.0' PP			n
L-9	21	a									G3	24-12X	2.8		0.98	239	1	8				0.82		0.33									G3 INLET GRATE TYPE 24-12X	"B2" 151+02.67	21	a
		b				100.0																	10.04					4.17	8.33				15" x 100.0' PP			b
		c									GT3	24-12X	3.0		1.73	478	1	11				0.93		0.45									GT3 INLET GRATE TYPE 24-12X			c
		d				100.0																	10.04					4.17	8.33				15" x 100.0' PP			d
		e												1			1	10				0.93		0.41									ADJUST INLET (2 GRATES)			e
SHEET TOTAL				3		942.1				3.5				5	14.09	3800	17	176		175		14.60	94.59	7.69		10.32		40.14	68.31							

(N) NOT A SEPARATE PAY ITEM, FOR INFORMATION ONLY.

DRAINAGE QUANTITIES

DQ-3

STATE OF CALIFORNIA - DEPARTMENT OF TRANSPORTATION
Caltrans
NORTH REGION
DIVISION OF ENGINEERING

FUNCTIONAL SUPERVISOR: KEN KEATON
CALCULATED-DESIGNED BY: KEVIN LEE
CHECKED BY: VINH LAO
REVISED BY
DATE REVISED

LAST REVISION 00-00-00
DATE PLOTTED => 09-OCT-2013
TIME PLOTTED => 12:46

Dist	COUNTY	ROUTE	POST MILES TOTAL PROJECT	SHEET No.	TOTAL SHEETS
03	Pla	89	T8.6/12.8	44	77

REGISTERED CIVIL ENGINEER 10-7-13 DATE

10-7-13
PLANS APPROVAL DATE

REGISTERED PROFESSIONAL ENGINEER KEVIN F. LEE No. 78077 Exp. 9-30-13 CIVIL STATE OF CALIFORNIA

THE STATE OF CALIFORNIA OR ITS OFFICERS OR AGENTS SHALL NOT BE RESPONSIBLE FOR THE ACCURACY OR COMPLETENESS OF SCANNED COPIES OF THIS PLAN SHEET.

NOTES:

1. SEE STANDARD PLAN D98B. 6 INCH GRATE SLOT-SECTION WITH THE TAPERED SPACER OPTION IS REQUIRED.
2. HDPES IS HIGH DENSITY POLYETHYLENE PIPE WITH A SMOOTH INTERIOR.

DRAINAGE ITEMS

LAYOUT SHEET	DRAINAGE SYSTEM No.	DRAINAGE UNIT	GRATED LINE DRAIN	MARKER (CULVERT)	PLASTIC PIPE 12" PP	PLASTIC PIPE 15" PP	PLASTIC PIPE 18" PP	PLASTIC PIPE 24" PP	12" SLOTTED CORRUGATED STEEL PIPE (.079" THICK)	36" CORRUGATED STEEL PIPE INLET (.079" THICK)	DRAINAGE INLETS INLET TYPE	DRAINAGE INLETS FRAME GRATE TYPE	DRAINAGE INLETS (N) HEIGHT OF INLET "H"	DRAINAGE INLETS ADJUST INLET	DRAINAGE INLETS MINOR CONCRETE (MINOR STRUCTURE)	DRAINAGE INLETS MISCELLANEOUS IRON AND STEEL	DRAINAGE INLETS DRAINAGE INLET MARKER	REMOVE CONCRETE CURB	REMOVE CONCRETE (GUTTER)	REMOVE CONCRETE (CURB AND GUTTER)	REMOVE CULVERT	MINOR CONCRETE (GUTTER DEPRESSION)	CONCRETE BACKFILL (PIPE TRENCH)	MINOR CONCRETE (CURB)	MINOR CONCRETE (GUTTER)	MINOR CONCRETE (CURB AND GUTTER)	BAR REINFORCING STEEL (EPOXY COATED)	CLASS 2 AGGREGATE BASE	MINOR HOT MIX ASPHALT	CLASS 1 PERMEABLE MATERIAL (BLANKET)	GEOSYNTHETIC PAVEMENT INTERLAYER (PAVING FABRIC)	UNDERDRAIN MARKER	DESCRIPTION	STATION	DRAINAGE SYSTEM No.	DRAINAGE UNIT
			LF	EA	LF	LF	LF	LF	LF	LF			LF	EA	CY	LB	EA	LF	LF	LF	LF	CY	CY	CY	CY	CY	LB	CY	TON	CY	SQYD	EA				
L-9	22	a									GT3	24-12X	2.6		1.54	478	1	11				0.93		0.45									GT3 INLET GRATE TYPE 24-12X	"B2" 153+95.28	22	a
		b				28.4																	2.85					1.18	2.37				15" x 28.4' PP			b
		c												1			1	10				0.93		0.41									ADJUST INLET (2 GRATES)			c
	23	a									G3	24-12X	2.8		0.98	239	1	8				0.82		0.33									G3 INLET GRATE TYPE 24-12X	"B2" 156+30.95	23	a
		b				100.0																	10.04					5.00	8.33				15" x 100.0' PP			b
		c												1			1	10				0.93		0.41									ADJUST INLET (2 GRATES)			c
		d												1			1	11				0.93		0.45									ADJUST INLET (2 GRATES)			d
	24	a									G3	24-12X	2.7		0.96	239	1	8				0.82		0.65									G3 INLET GRATE TYPE 24-12X	"B2" 160+31.47	24	a
		b				40.6																	4.08					1.69	3.38				15" x 40.6' PP			b
		c									G3	24-12X	2.7		0.96	239	1	8				0.82		0.65									G3 INLET GRATE TYPE 24-12X			c
		d				74.2																	7.45					3.09	6.18				15" x 74.2' PP			d
		e									G3	24-12X	2.7		0.96	239	1	8				0.82		0.65									G3 INLET GRATE TYPE 24-12X			e
		f				62.7																	6.30					2.61	5.23				15" x 62.7' PP			f
		g									GT3	24-12X	2.7		1.59	478	1	11				0.93		0.85									GT3 INLET GRATE TYPE 24-12X			g
		h				168.0																	16.87					7.00	14.00				15" x 168.0' PP			h
L-10	25	a									G3	24-12X	2.7		0.96	239	1	8				0.82		0.33									G3 INLET GRATE TYPE 24-12X	"B2" 171+99.18	25	a
L-11		b				100.0																	10.04					3.33	8.33				15" x 100.0' PP			b
		c									GT3	24-12X	2.7		1.59	478	1	11				0.93		0.45									GT3 INLET GRATE TYPE 24-12X			c
		d				55.2																	5.54					2.30	4.60				15" x 55.2' PP			d
		e												1			1	6				0.82		0.25									ADJUST INLET			e
	26	a									G3	24-12X	2.8		0.98	239	1					0.82											G3 INLET GRATE TYPE 24-12X	"B2" 175+42.90	26	a
		b				76.0														81			7.63			4.78		5.25	3.00				15" x 76.0' PP			b
	27	a		1							G3	24-12X	2.9		1.01	239	1	8				0.82		0.33									G3 INLET GRATE TYPE 24-12X	"B2" 182+90.90	27	a
		b				27.9																	2.77					1.15	2.30				15" x 27.9' PP			b
		c		1							GT3	24-12X	2.9		1.69	478	1	8				0.93		0.33									GT3 INLET GRATE TYPE 24-12X			c
		d				70.0														70			7.03			4.13		4.54	2.60				15" x 70.0' PP			d
		e												1			1	5				0.82		0.20									ADJUST INLET			e
		f									GT3	24-12X	3.3		1.83	478	1	8				0.93		0.33									GT3 INLET GRATE TYPE 24-12X			f
		g					27.4																3.28					3.04	2.54				18" x 27.4' PP			g
		h								3.3	GMP	36RX	2.7		0.23	215	1																GMP INLET GRATE TYPE 36RX			h
		i					2.0																										18" x 2.0' PP			i
		j												1			1	6				0.82		0.25									ADJUST INLET			j
SHEET TOTAL				2		803.0	29.4			3.3				6	15.28	4278	19	145		151		15.64	83.88	7.32		8.91		40.18	62.86							

(N) NOT A SEPARATE PAY ITEM, FOR INFORMATION ONLY.

DRAINAGE QUANTITIES

DQ-4

REVISED BY | DATE REVISED
KEVIN LEE | VINH LAO
CALCULATED-DESIGNED BY | CHECKED BY
FUNCTIONAL SUPERVISOR: KEN KEATON

STATE OF CALIFORNIA - DEPARTMENT OF TRANSPORTATION
Caltrans
NORTH REGION
DIVISION OF ENGINEERING

LAST REVISION 00-00-00 | DATE PLOTTED => 09-OCT-2013 | TIME PLOTTED => 12:46

Dist	COUNTY	ROUTE	POST MILES TOTAL PROJECT	SHEET No.	TOTAL SHEETS
03	Pla	89	T8.6/12.8	45	77

REGISTERED CIVIL ENGINEER 10-7-13 DATE

10-7-13
PLANS APPROVAL DATE

REGISTERED PROFESSIONAL ENGINEER KEVIN F. LEE No. 78077 Exp. 9-30-13 CIVIL STATE OF CALIFORNIA

THE STATE OF CALIFORNIA OR ITS OFFICERS OR AGENTS SHALL NOT BE RESPONSIBLE FOR THE ACCURACY OR COMPLETENESS OF SCANNED COPIES OF THIS PLAN SHEET.

NOTES:

1. SEE STANDARD PLAN D98B. 6 INCH GRATE SLOT-SECTION WITH THE TAPERED SPACER OPTION IS REQUIRED.
2. HDPES IS HIGH DENSITY POLYETHYLENE PIPE WITH A SMOOTH INTERIOR.

DRAINAGE ITEMS

LAYOUT SHEET	DRAINAGE SYSTEM No.	DRAINAGE UNIT	GRATED LINE DRAIN	MARKER (CULVERT)	PLASTIC PIPE 12" PP	PLASTIC PIPE 15" PP	PLASTIC PIPE 18" PP	PLASTIC PIPE 24" PP	12" SLOTTED CORRUGATED STEEL PIPE (.079" THICK)	36" CORRUGATED STEEL PIPE INLET (.079" THICK)	DRAINAGE INLETS INLET TYPE	DRAINAGE INLETS FRAME GRATE TYPE	DRAINAGE INLETS (N) HEIGHT OF INLET "H"	DRAINAGE INLETS ADJUST INLET	DRAINAGE INLETS MINOR CONCRETE (MINOR STRUCTURE)	DRAINAGE INLETS MISCELLANEOUS IRON AND STEEL	DRAINAGE INLETS DRAINAGE INLET MARKER	REMOVE CONCRETE CURB	REMOVE CONCRETE (GUTTER)	REMOVE CONCRETE (CURB AND GUTTER)	REMOVE CULVERT	MINOR CONCRETE (GUTTER DEPRESSION)	CONCRETE BACKFILL (PIPE TRENCH)	MINOR CONCRETE (CURB)	MINOR CONCRETE (GUTTER)	MINOR CONCRETE (CURB AND GUTTER)	BAR REINFORCING STEEL (EPOXY COATED)	CLASS 2 AGGREGATE BASE	MINOR HOT MIX ASPHALT	CLASS 1 PERMEABLE MATERIAL (BLANKET)	GEOSYNTHETIC PAVEMENT INTERLAYER (PAVING FABRIC)	UNDERDRAIN MARKER	DESCRIPTION	STATION	DRAINAGE SYSTEM No.	DRAINAGE UNIT
			LF	EA	LF	LF	LF	LF	LF	LF			LF	EA	CY	LB	EA	LF	LF	LF	LF	CY	CY	CY	CY	CY	LB	CY	TON	CY	SQYD	EA				
	27	k												1			1					0.93											ADJUST INLET (2 GRATES)		27	k
L-12	28	a									G3	24-12X	2.8		0.98	239	1	8				0.82		0.36									G3 INLET GRATE TYPE 24-12X	"B2" 186+98.98	28	a
		b				35.3																	3.54					1.47	2.94				15" x 35.3' PP			b
		c		1							G3	24-12X	3.1		1.05	239	1	8				0.82		0.33									G3 INLET GRATE TYPE 24-12X			c
		d				100.0																	10.04					6.25	8.33				15" x 100.0' PP	"B2" 186+98.98	28	d
		e									GT3	24-12X	2.8		1.69	478	1	11				0.93		0.45									GT3 INLET GRATE TYPE 24-12X			e
		f				78.5																	7.88					3.27	6.54				15" x 78.5' PP			f
		g												1			1	16				1.04		0.65									ADJUST INLET (3 GRATES)			g
		h												1			1	7				0.82		0.29									ADJUST INLET			h
	29	a									G1	24-12X	2.4		0.81	239	1												0.78				G1 INLET GRATE TYPE 24-12X	"B2" 193+28.90	29	a
		b							290.0														7.68		21.59		1794		21.48				12" x 290.0' SLOTTED DRAIN			b
		c									G1	24-12X	2.4		0.81	239	1												0.78				G1 INLET GRATE TYPE 24-12X			c
		d				9.0																	0.90					0.31	0.61				15" x 9.0' PP			d
SHEET TOTAL			-	1	-	222.8	-	-	290.0	-	-	-	-	3	5.34	1434	8	50	-	-	-	5.36	30.04	2.08	21.59	-	1794	11.30	41.46	-	-	-				
DQ-1 TOTAL			-	-	300.0	413.2	-	-	102.3	-	-	-	-	10	11.69	3107	20	221	103	-	-	17.06	52.14	11.51	9.65	-	633	24.94	64.23	-	-	-				
DQ-2 TOTAL			27.1	-		335.0	132.1	57.1	-	3.2	-	-	-	2	15.39	3800	12	127	-	-	57.1	10.72	58.18	5.50	-	-	-	36.06	43.11	-	-	-				
DQ-3 TOTAL			-	3	-	942.1	-	-	-	3.5	-	-	-	5	14.09	3800	17	176	-	175	-	14.60	94.59	7.69	-	10.32	-	40.14	68.31	-	-	-				
DQ-4 TOTAL			-	2	-	803.0	29.4	-	-	3.3	-	-	-	6	15.28	4278	19	145	-	151	-	15.64	83.88	7.32	-	8.91	-	40.18	62.86	-	-	-				
DD-1 TOTAL			-	-	-	-	-	-	-	-	-	-	-	-	0.51	-	-	-	-	-	-	-	0.006	-	-	-	-	-	-	65.1	194.6	1				
TOTAL			27.1	6	300.0	2,716.1	161.5	57.1	392.3	10.0	-	-	-	26	62.30	16419	76	719*	103	326	57.1	63.38	318.836	34.10*	31.24	19.23	2427	152.62*	279.97	65.1	194.6	1				

(N) NOT A SEPARATE PAY ITEM, FOR INFORMATION ONLY.
* FOR TOTAL QUANTITY, SEE SUMMARY OF QUANTITIES.

DRAINAGE QUANTITIES

DQ-5

REVISED BY | DATE REVISED
VINH LAO
CALCULATED-DESIGNED BY | CHECKED BY
FUNCTIONAL SUPERVISOR
KEN KEATON

STATE OF CALIFORNIA - DEPARTMENT OF TRANSPORTATION
Caltrans
NORTH REGION
DIVISION OF ENGINEERING

LAST REVISION 00-00-00 | DATE PLOTTED => 09-OCT-2013 | TIME PLOTTED => 12:46

Dist	COUNTY	ROUTE	POST MILES TOTAL PROJECT	SHEET No.	TOTAL SHEETS
03	Pla	89	T8.6/12.8	46	77

REGISTERED CIVIL ENGINEER 10-7-13 DATE

10-7-13
PLANS APPROVAL DATE

REGISTERED PROFESSIONAL ENGINEER KEVIN F. LEE No. 78077 Exp. 9-30-13 CIVIL STATE OF CALIFORNIA

THE STATE OF CALIFORNIA OR ITS OFFICERS OR AGENTS SHALL NOT BE RESPONSIBLE FOR THE ACCURACY OR COMPLETENESS OF SCANNED COPIES OF THIS PLAN SHEET.

NOTES:

SIGN LOCATIONS SHOWN ARE APROXIMATE.
EXACT LOCATIONS TO BE DETERMINED BY THE ENGINEER.

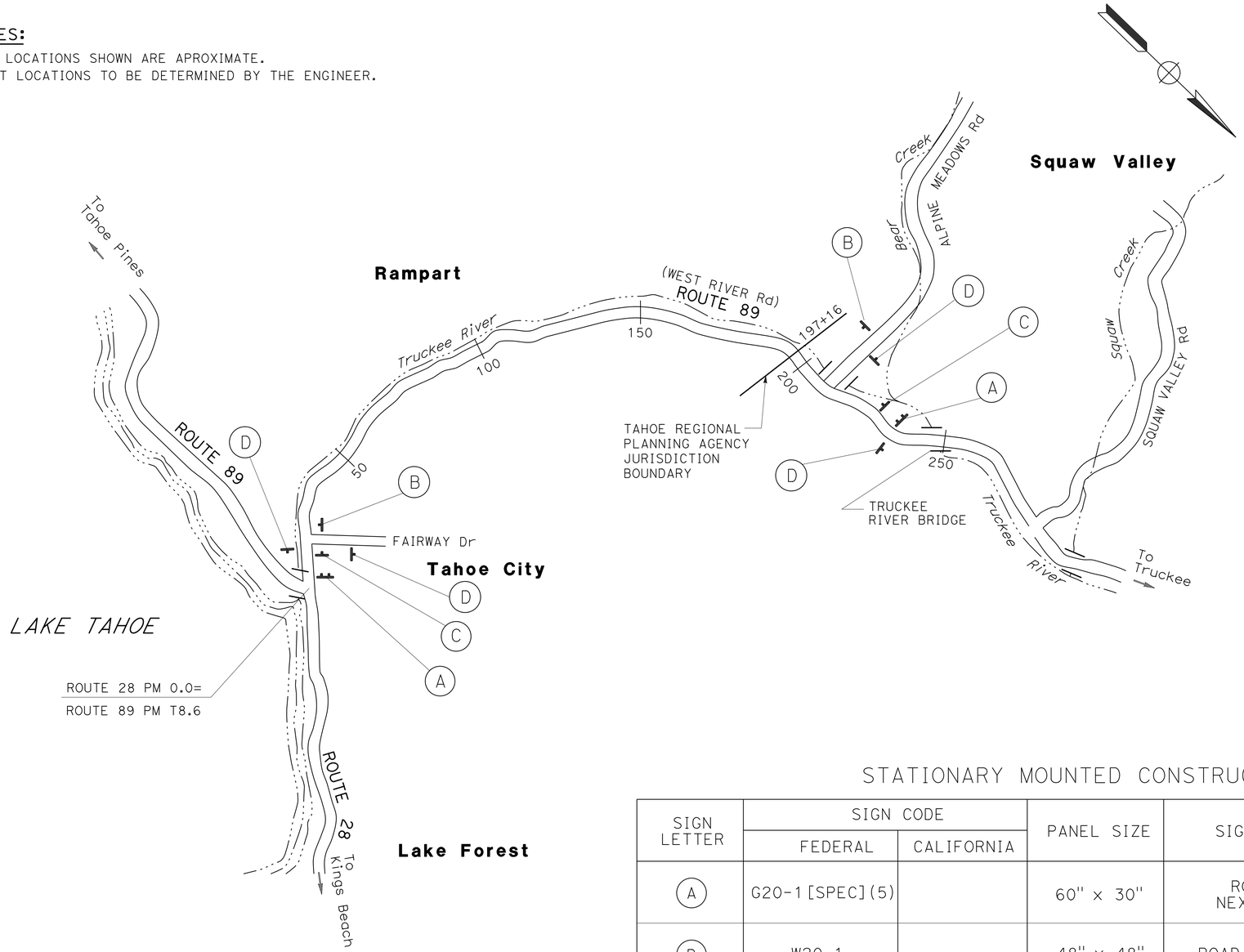

LEGEND

(X) CONSTRUCTION AREA SIGN LETTER

SIGN - SINGLE POST

SIGN - TWO POST

SIGN DETAIL

(A) G20-1 [SPEC] (5)

ROAD WORK
NEXT 5 MILES

6" C SERIES LETTER

60" X 30"

RETROREFLECTIVE ORANGE BACKGROUND WITH BLACK LEGEND AND BORDER.

(C) C40(Mod)<CA>

TRAFFIC FINES
DOUBLED IN
WORK ZONES

4" D SERIES LETTER

48" X 36"

RETROREFLECTIVE WHITE BACKGROUND WITH BLACK LEGEND AND BORDER.

STATIONARY MOUNTED CONSTRUCTION AREA SIGNS

SIGN LETTER	SIGN CODE		PANEL SIZE	SIGN MESSAGE	NUMBER OF POST AND SIZE	NUMBER OF SIGNS
	FEDERAL	CALIFORNIA				
(A)	G20-1[SPEC](5)		60" x 30"	ROAD WORK NEXT 5 MILES	2-4" x 6"	2
(B)	W20-1	C23	48" x 48"	ROAD WORK AHEAD	1-6" x 6"	2
(C)		C40(Mod)	48" x 36"	TRAFFIC FINES DOUBLED IN WORK ZONES	1-4" x 6"	2
(D)	G20-2	C14	36" x 18"	END ROAD WORK	1-4" x 4"	4

APPROVED FOR CONSTRUCTION AREA SIGN WORK ONLY

CONSTRUCTION AREA SIGNS

NO SCALE

CS-1

STATE OF CALIFORNIA - DEPARTMENT OF TRANSPORTATION
Caltrans
NORTH REGION
DIVISION OF ENGINEERING

FUNCTIONAL SUPERVISOR: KEN KEATON
CALCULATED-DESIGNED BY: KEVIN LEE
CHECKED BY: VINH LAO
REVISED BY
DATE REVISED

LAST REVISION 00-00-00
DATE PLOTTED => 09-OCT-2013
TIME PLOTTED => 12:46

Dist	COUNTY	ROUTE	POST MILES TOTAL PROJECT	SHEET No.	TOTAL SHEETS
03	Pla	89	T8.6/12.8	47	77

REGISTERED CIVIL ENGINEER 10-7-13 DATE

10-7-13
PLANS APPROVAL DATE

REGISTERED PROFESSIONAL ENGINEER
KEVIN F. LEE
No. 78077
Exp. 9-30-13
CIVIL
STATE OF CALIFORNIA

THE STATE OF CALIFORNIA OR ITS OFFICERS OR AGENTS SHALL NOT BE RESPONSIBLE FOR THE ACCURACY OR COMPLETENESS OF SCANNED COPIES OF THIS PLAN SHEET.

NOTES:

1. FOR ACCURATE RIGHT OF WAY DATA, CONTACT RIGHT OF WAY ENGINEERING AT THE DISTRICT OFFICE.

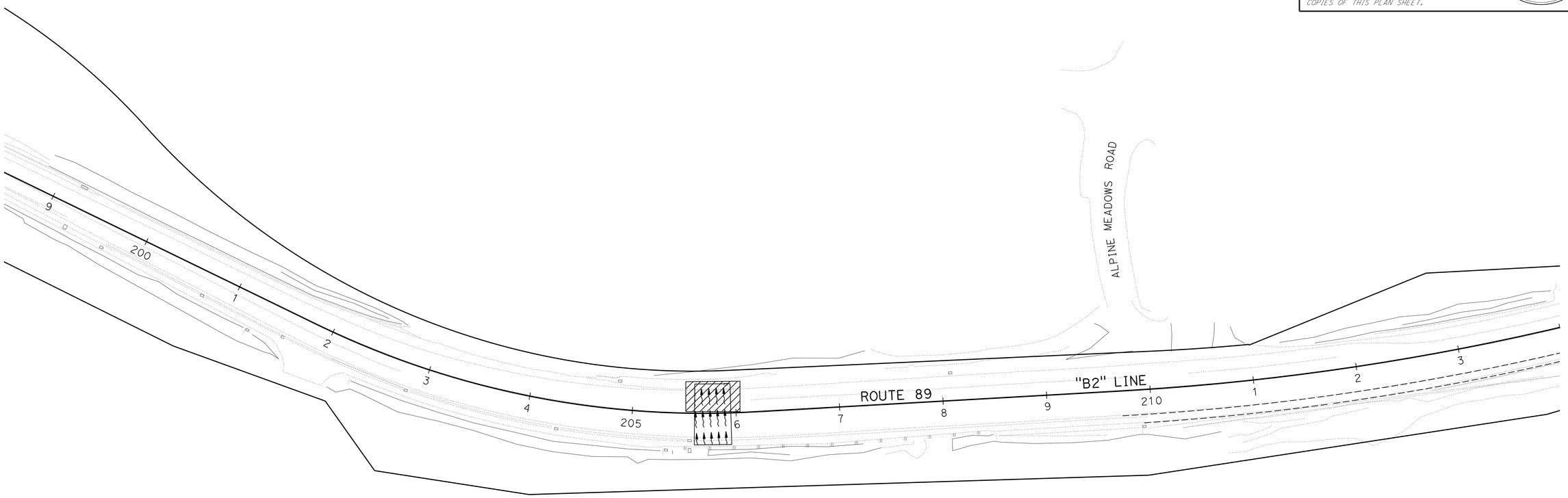

LEGEND

STAGE 1

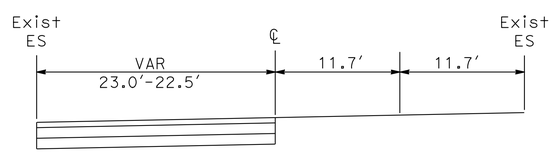

STAGE 1

STAGE 1

NOTES

CONSTRUCT UNDERDRAIN SYSTEM FOR WESTERLY PORTION OF ROAD.

CONSTRUCT NEW ROADWAY FOR WESTERLY PORTION OF ROAD.

STRUCTURAL SECTION FOR ROAD IS AS FOLLOWS:
0.5' HMA (TYPE A)
1.0' CL2 AB

SEE DRAINAGE DETAILS FOR DETAILS ON THE UNDERDRAIN SYSTEM.

APPROVED FOR STAGE CONSTRUCTION WORK ONLY

STAGE 1

STAGE CONSTRUCTION

SCALE: 1" = 50'

SC-1

STATE OF CALIFORNIA - DEPARTMENT OF TRANSPORTATION
Caltrans
NORTH REGION
DIVISION OF ENGINEERING

FUNCTIONAL SUPERVISOR: KEN KEATON
CALCULATED-DESIGNED BY: ALIREZA KANGARLOW
CHECKED BY: KEVIN LEE
REVISED BY
DATE REVISED

LAST REVISION 00-00-00
DATE PLOTTED => 09-OCT-2013
TIME PLOTTED => 12:46

Dist	COUNTY	ROUTE	POST MILES TOTAL PROJECT	SHEET No.	TOTAL SHEETS
03	Pla	89	T8.6/12.8	48	77

REGISTERED CIVIL ENGINEER 10-7-13 DATE

10-7-13
PLANS APPROVAL DATE

REGISTERED PROFESSIONAL ENGINEER
KEVIN F. LEE
No. 78077
Exp. 9-30-13
CIVIL
STATE OF CALIFORNIA

THE STATE OF CALIFORNIA OR ITS OFFICERS OR AGENTS SHALL NOT BE RESPONSIBLE FOR THE ACCURACY OR COMPLETENESS OF SCANNED COPIES OF THIS PLAN SHEET.

NOTES:

1. FOR ACCURATE RIGHT OF WAY DATA, CONTACT RIGHT OF WAY ENGINEERING AT THE DISTRICT OFFICE.

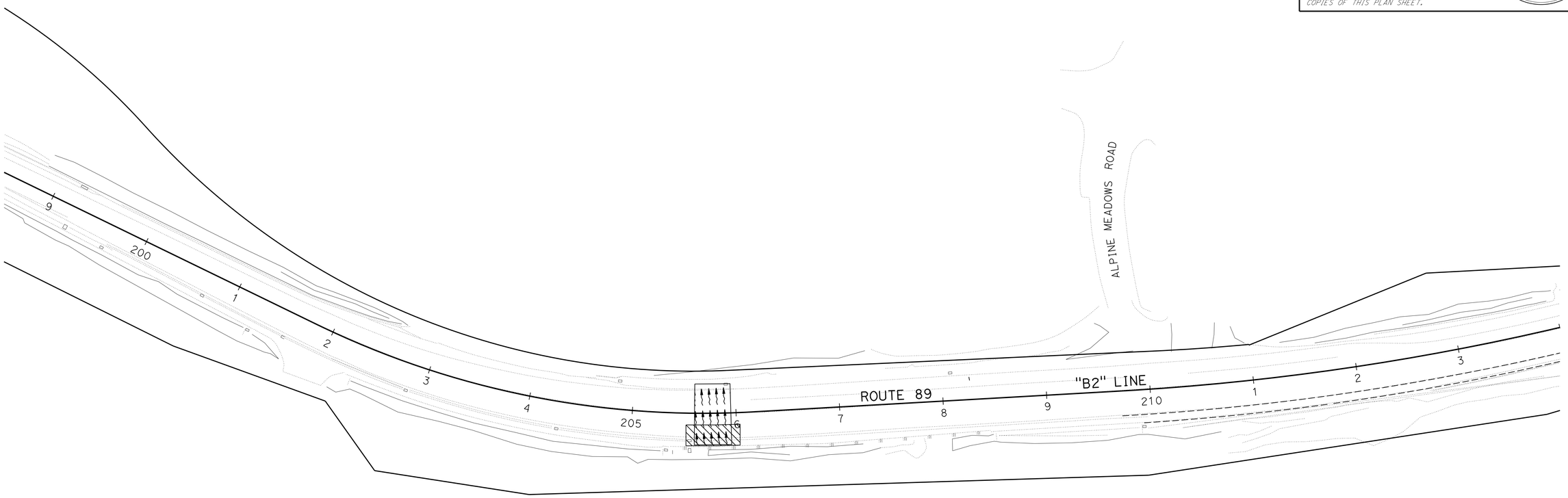

LEGEND

STAGE 2

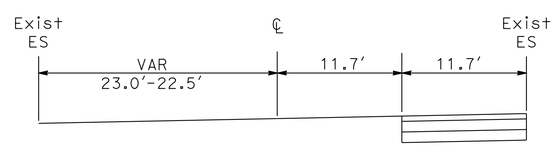

STAGE 2

STAGE 2

NOTES

CONSTRUCT UNDERDRAIN SYSTEM FOR EASTERLY PORTION OF ROAD.

CONSTRUCT NEW ROADWAY FOR EASTERLY PORTION OF ROAD.

STRUCTURAL SECTION FOR ROAD IS AS FOLLOWS:
0.5' HMA (TYPE A)
1.0' CL2 AB

SEE DRAINAGE DETAILS FOR DETAILS ON THE UNDERDRAIN SYSTEM

APPROVED FOR STAGE CONSTRUCTION WORK ONLY

STAGE CONSTRUCTION

STAGE 2

SCALE: 1" = 50'

SC-2

REVISED BY
DATE REVISED
ALIREZA KANGARLOW
KEVIN LEE
CALCULATED-DESIGNED BY
CHECKED BY
FUNCTIONAL SUPERVISOR
KEN KEATON

STATE OF CALIFORNIA - DEPARTMENT OF TRANSPORTATION
Caltrans
NORTH REGION
DIVISION OF ENGINEERING

LAST REVISION 00-00-00
DATE PLOTTED => 09-OCT-2013
TIME PLOTTED => 12:46

Dist	COUNTY	ROUTE	POST MILES TOTAL PROJECT	SHEET No.	TOTAL SHEETS
03	Pla	89	T8.6/12.8	49	77

REGISTERED CIVIL ENGINEER 10-7-13 DATE

10-7-13
PLANS APPROVAL DATE

REGISTERED PROFESSIONAL ENGINEER
KEVIN F. LEE
No. 78077
Exp. 9-30-13
CIVIL
STATE OF CALIFORNIA

THE STATE OF CALIFORNIA OR ITS OFFICERS OR AGENTS SHALL NOT BE RESPONSIBLE FOR THE ACCURACY OR COMPLETENESS OF SCANNED COPIES OF THIS PLAN SHEET.

NOTES:

1. FOR ACCURATE RIGHT OF WAY DATA, CONTACT RIGHT OF WAY ENGINEERING AT THE DISTRICT OFFICE.

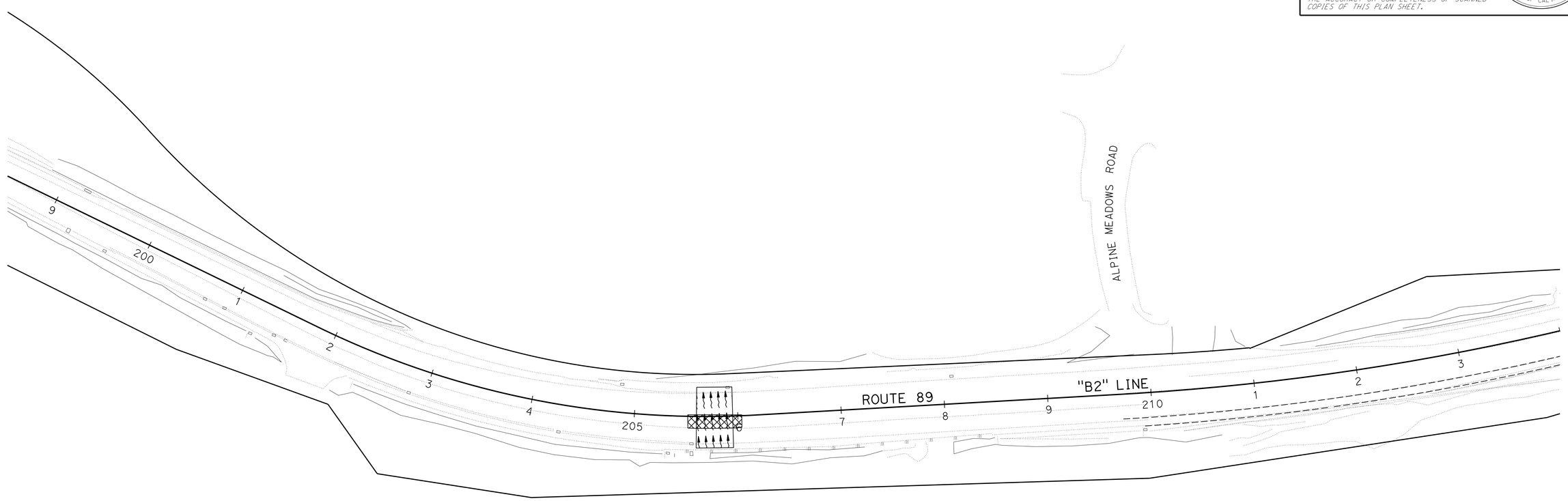

LEGEND

STAGE 3

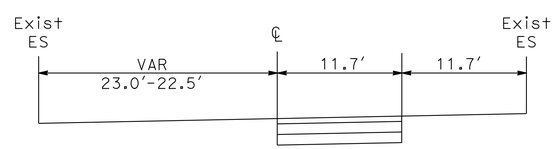

STAGE 3

STAGE 3

NOTES

CONSTRUCT UNDERDRAIN SYSTEM FOR CENTER PORTION OF ROAD.

CONSTRUCT NEW ROADWAY FOR CENTER PORTION OF ROAD.

STRUCTURAL SECTION FOR ROAD IS AS FOLLOWS:
0.5' HMA (TYPE A)
1.0' CL2 AB

SEE DRAINAGE DETAILS FOR DETAILS ON THE UNDERDRAIN SYSTEM.

APPROVED FOR STAGE CONSTRUCTION WORK ONLY

STAGE CONSTRUCTION
STAGE 3
SCALE: 1" = 50'

SC-3

REVISED BY | DATE REVISED
ALIREZA KANGARLOW | KEVIN LEE
CALCULATED-DESIGNED BY | CHECKED BY
FUNCTIONAL SUPERVISOR: KEN KEATON

STATE OF CALIFORNIA - DEPARTMENT OF TRANSPORTATION
Caltrans
NORTH REGION
DIVISION OF ENGINEERING

LAST REVISION 00-00-00 | DATE PLOTTED => 09-OCT-2013 | TIME PLOTTED => 12:46

Dist	COUNTY	ROUTE	POST MILES TOTAL PROJECT	SHEET No.	TOTAL SHEETS
03	Pla	89	T8.6/12.8	50	77

REGISTERED CIVIL ENGINEER 10-7-13 DATE

10-7-13
PLANS APPROVAL DATE

REGISTERED PROFESSIONAL ENGINEER
KEVIN F. LEE
No. 78077
Exp. 9-30-13
CIVIL
STATE OF CALIFORNIA

THE STATE OF CALIFORNIA OR ITS OFFICERS OR AGENTS SHALL NOT BE RESPONSIBLE FOR THE ACCURACY OR COMPLETENESS OF SCANNED COPIES OF THIS PLAN SHEET.

NOTES:

1. FOR ACCURATE RIGHT OF WAY DATA, CONTACT RIGHT OF WAY ENGINEERING AT THE DISTRICT OFFICE.

LEGEND:

- LIMIT OF STRIPING PATTERN
- CHANGE IN STRIPING PATTERN
- (No.) PAVEMENT DELINEATION DETAIL NUMBER
- TYPE III ARROW

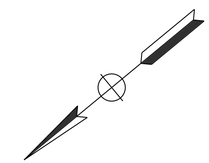

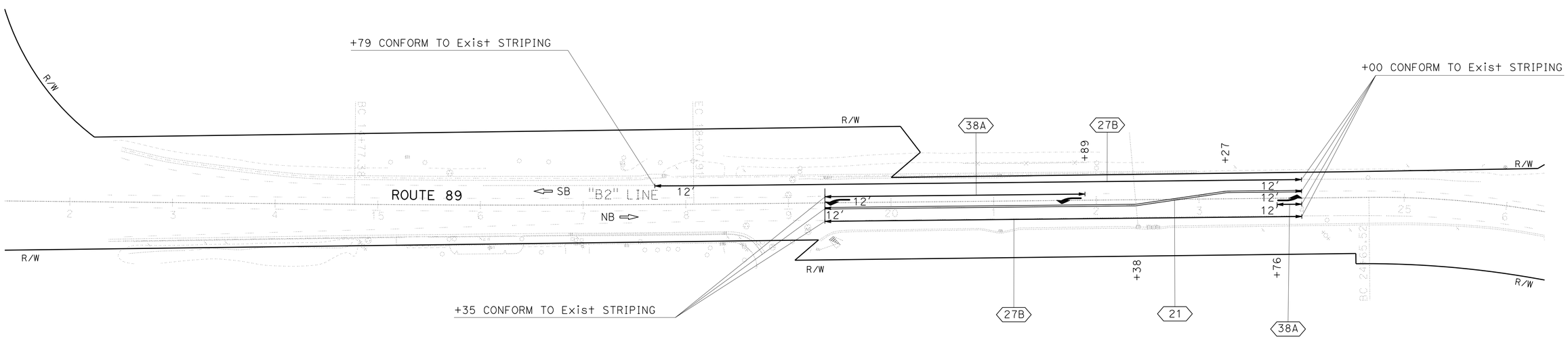

PAVEMENT DELINEATION PLAN

SCALE: 1" = 50'

PD-1

APPROVED FOR PAVEMENT DELINEATION WORK ONLY

STATE OF CALIFORNIA - DEPARTMENT OF TRANSPORTATION
Caltrans
NORTH REGION
DIVISION OF ENGINEERING

FUNCTIONAL SUPERVISOR: KEN KEATON

CALCULATED-DESIGNED BY: LITTON WANG
CHECKED BY: KEVIN LEE

REVISED BY | DATE REVISED

LAST REVISION 00-00-00 | DATE PLOTTED => 09-OCT-2013 | TIME PLOTTED => 12:46

Dist	COUNTY	ROUTE	POST MILES TOTAL PROJECT	SHEET No.	TOTAL SHEETS
03	Pla	89	T8.6/12.8	51	77

REGISTERED CIVIL ENGINEER 10-7-13 DATE

10-7-13
PLANS APPROVAL DATE

REGISTERED PROFESSIONAL ENGINEER
KEVIN F. LEE
No. 78077
Exp. 9-30-13
CIVIL
STATE OF CALIFORNIA

THE STATE OF CALIFORNIA OR ITS OFFICERS OR AGENTS SHALL NOT BE RESPONSIBLE FOR THE ACCURACY OR COMPLETENESS OF SCANNED COPIES OF THIS PLAN SHEET.

NOTES:

1. FOR ACCURATE RIGHT OF WAY DATA, CONTACT RIGHT OF WAY ENGINEERING AT THE DISTRICT OFFICE.

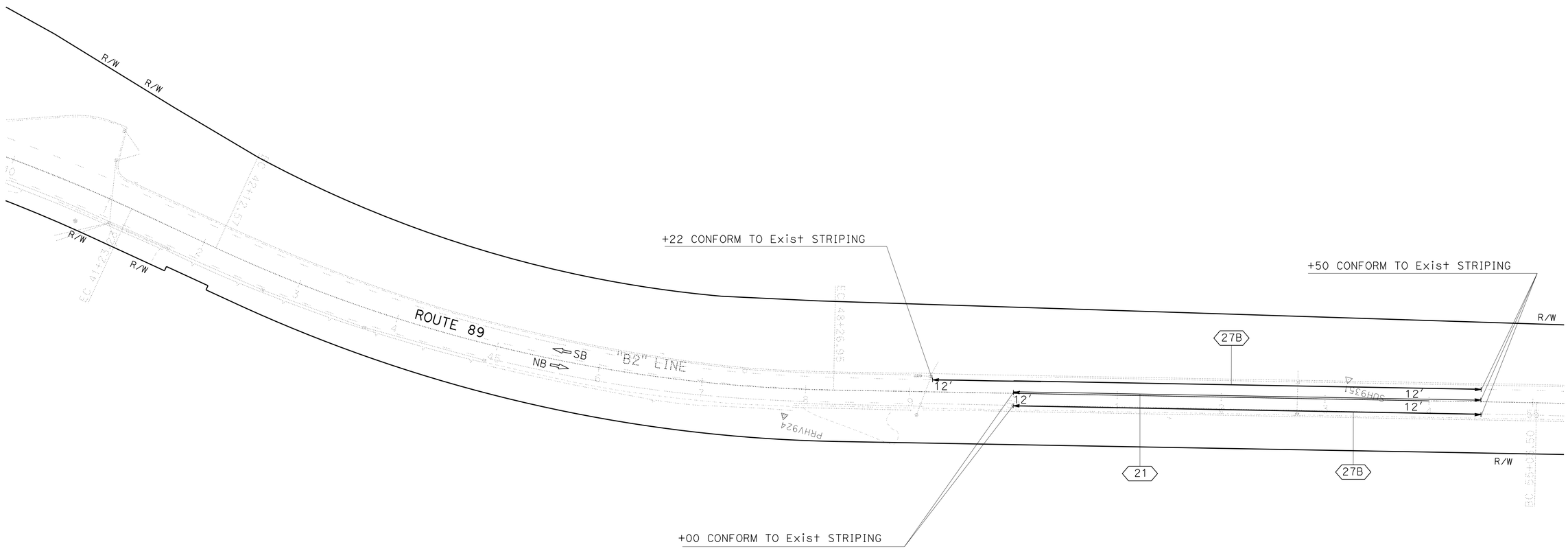

PAVEMENT DELINEATION PLAN

SCALE: 1" = 50'

PD-2

APPROVED FOR PAVEMENT DELINEATION WORK ONLY

STATE OF CALIFORNIA - DEPARTMENT OF TRANSPORTATION
Caltrans
NORTH REGION
DIVISION OF ENGINEERING

FUNCTIONAL SUPERVISOR: KEN KEATON

CALCULATED-DESIGNED BY: LITTON WANG
CHECKED BY: KEVIN LEE

REVISED BY
DATE REVISED

LAST REVISION DATE PLOTTED => 09-OCT-2013
00-00-00 TIME PLOTTED => 12:46

Dist	COUNTY	ROUTE	POST MILES TOTAL PROJECT	SHEET No.	TOTAL SHEETS
03	Pla	89	T8.6/12.8	52	77

REGISTERED CIVIL ENGINEER 10-7-13 DATE

10-7-13
PLANS APPROVAL DATE

REGISTERED PROFESSIONAL ENGINEER
KEVIN F. LEE
No. 78077
Exp. 9-30-13
CIVIL
STATE OF CALIFORNIA

THE STATE OF CALIFORNIA OR ITS OFFICERS OR AGENTS SHALL NOT BE RESPONSIBLE FOR THE ACCURACY OR COMPLETENESS OF SCANNED COPIES OF THIS PLAN SHEET.

NOTES:

1. FOR ACCURATE RIGHT OF WAY DATA, CONTACT RIGHT OF WAY ENGINEERING AT THE DISTRICT OFFICE.

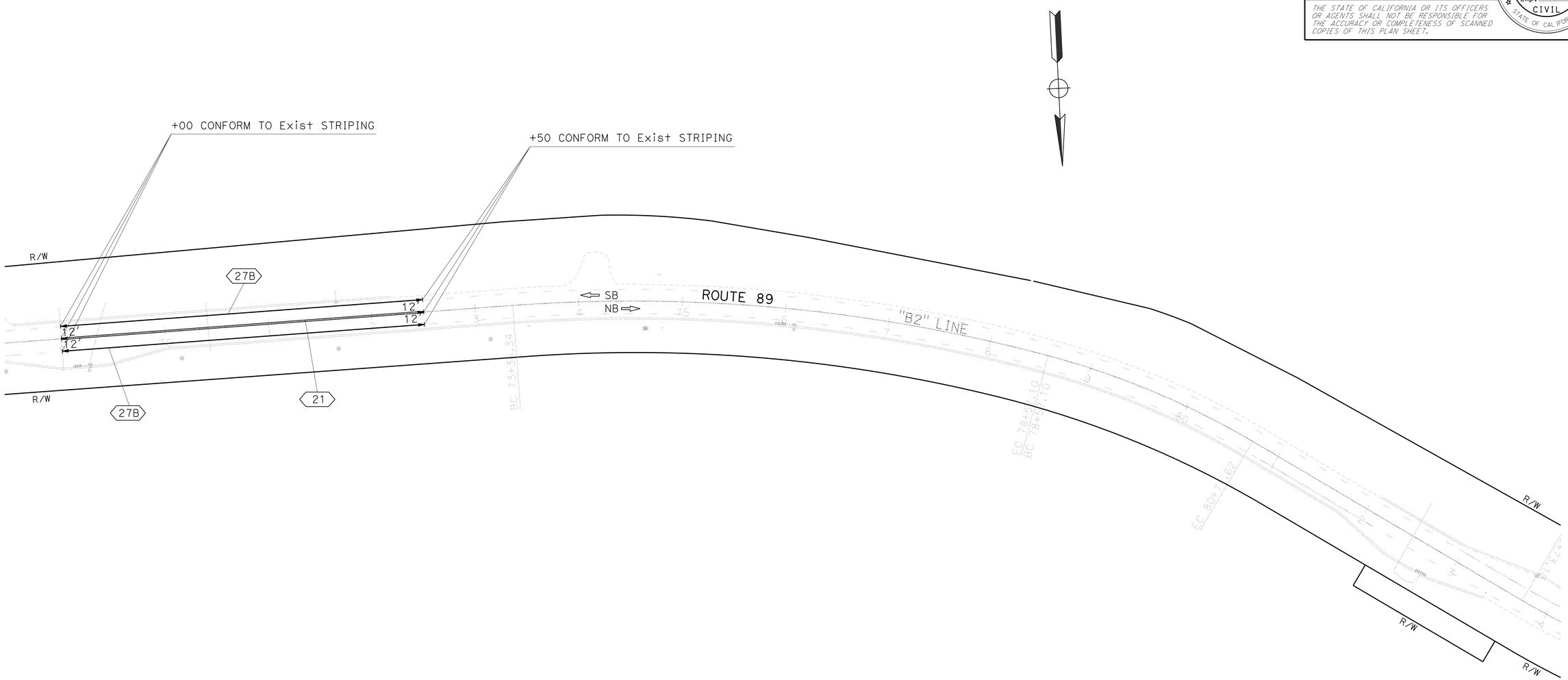

APPROVED FOR PAVEMENT DELINEATION WORK ONLY

PAVEMENT DELINEATION PLAN

SCALE: 1" = 50'

PD-3

REVISED BY	DATE REVISED

CALCULATED-DESIGNED BY	CHECKED BY
LITTON WANG	KEVIN LEE

FUNCTIONAL SUPERVISOR: KEN KEATON

STATE OF CALIFORNIA - DEPARTMENT OF TRANSPORTATION
Caltrans
NORTH REGION
DIVISION OF ENGINEERING

LAST REVISION 00-00-00
DATE PLOTTED => 09-OCT-2013
TIME PLOTTED => 12:46

Dist	COUNTY	ROUTE	POST MILES TOTAL PROJECT	SHEET No.	TOTAL SHEETS
03	Pla	89	T8.6/12.8	53	77

REGISTERED CIVIL ENGINEER 10-7-13 DATE

10-7-13
PLANS APPROVAL DATE

REGISTERED PROFESSIONAL ENGINEER KEVIN F. LEE No. 78077 Exp. 9-30-13 CIVIL STATE OF CALIFORNIA

THE STATE OF CALIFORNIA OR ITS OFFICERS OR AGENTS SHALL NOT BE RESPONSIBLE FOR THE ACCURACY OR COMPLETENESS OF SCANNED COPIES OF THIS PLAN SHEET.

NOTES:

1. FOR ACCURATE RIGHT OF WAY DATA, CONTACT RIGHT OF WAY ENGINEERING AT THE DISTRICT OFFICE.

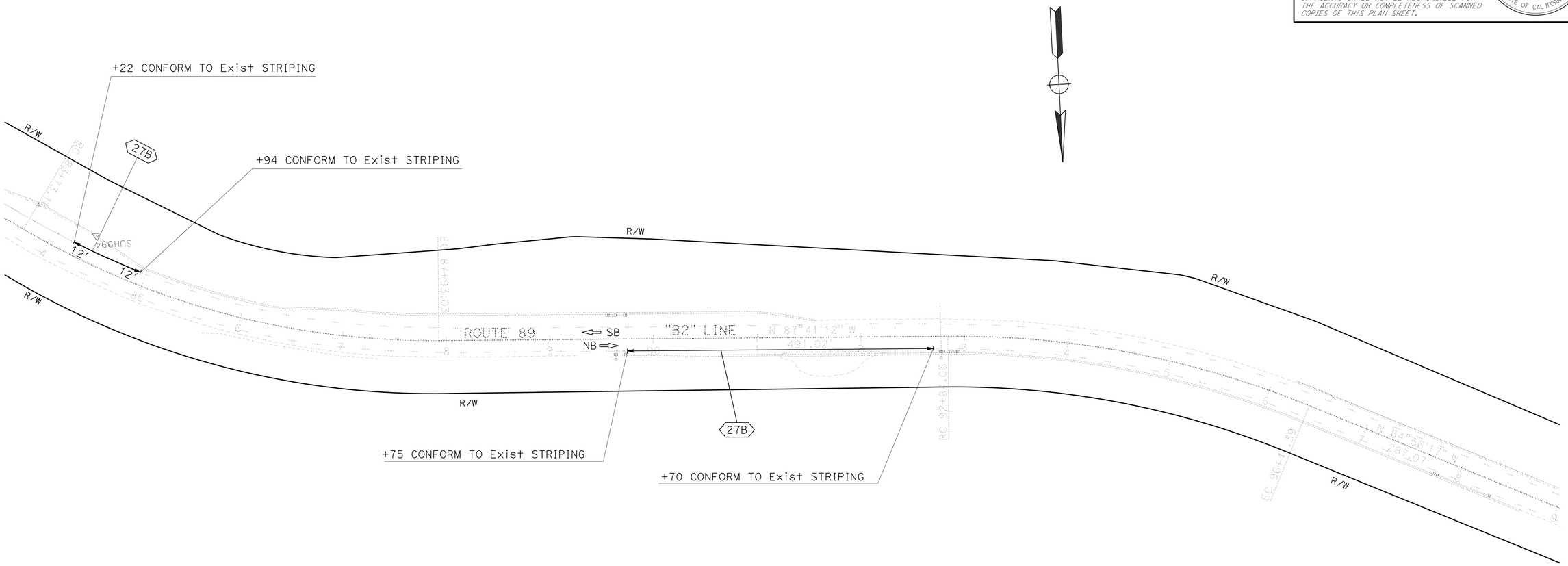

PAVEMENT DELINEATION PLAN

SCALE: 1" = 50'

APPROVED FOR PAVEMENT DELINEATION WORK ONLY

PD-4

REVISED BY	DATE REVISED

CALCULATED-DESIGNED BY	CHECKED BY
LITTON WANG	KEVIN LEE

FUNCTIONAL SUPERVISOR: KEN KEATON

STATE OF CALIFORNIA - DEPARTMENT OF TRANSPORTATION
Caltrans
NORTH REGION
DIVISION OF ENGINEERING

LAST REVISION 00-00-00 | DATE PLOTTED => 09-OCT-2013 | TIME PLOTTED => 12:46

Dist	COUNTY	ROUTE	POST MILES TOTAL PROJECT	SHEET No.	TOTAL SHEETS
03	Pla	89	T8.6/12.8	54	77

REGISTERED CIVIL ENGINEER 10-7-13 DATE

10-7-13
PLANS APPROVAL DATE

REGISTERED PROFESSIONAL ENGINEER
KEVIN F. LEE
No. 78077
Exp. 9-30-13
CIVIL
STATE OF CALIFORNIA

THE STATE OF CALIFORNIA OR ITS OFFICERS OR AGENTS SHALL NOT BE RESPONSIBLE FOR THE ACCURACY OR COMPLETENESS OF SCANNED COPIES OF THIS PLAN SHEET.

NOTES:

1. FOR ACCURATE RIGHT OF WAY DATA, CONTACT RIGHT OF WAY ENGINEERING AT THE DISTRICT OFFICE.

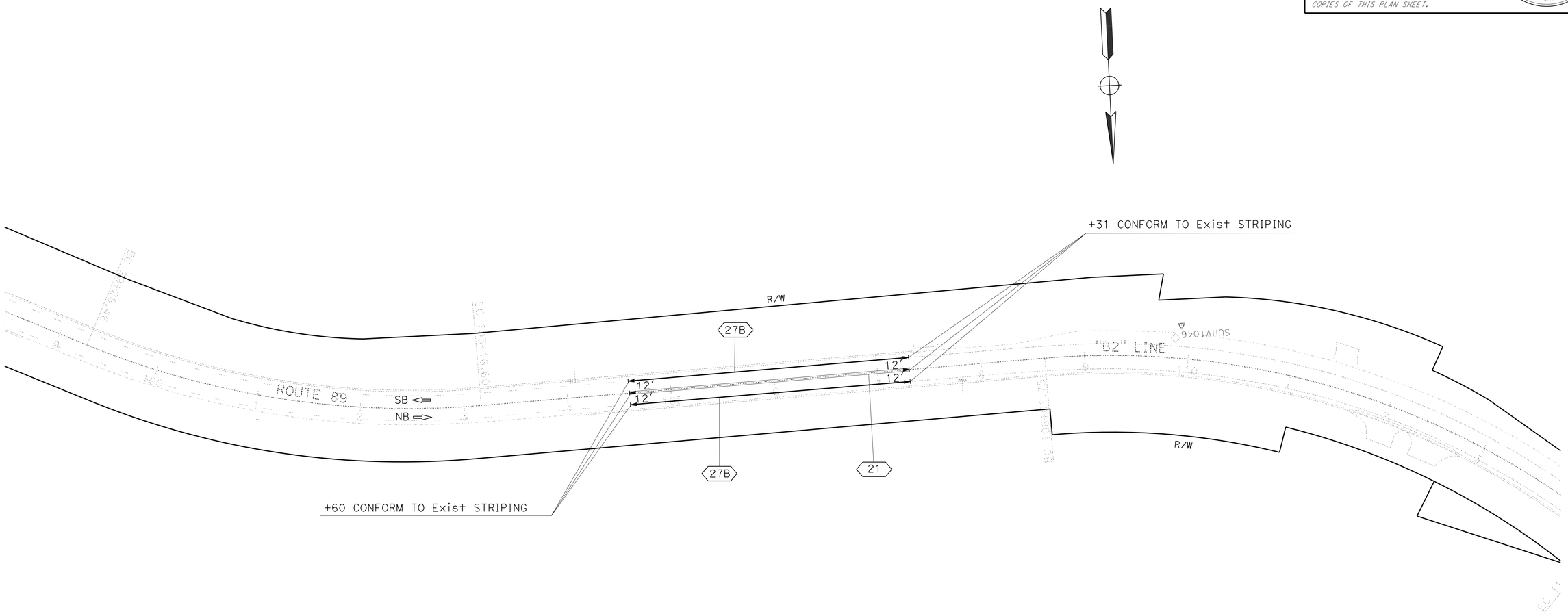

PAVEMENT DELINEATION PLAN

SCALE: 1" = 50'

PD-5

APPROVED FOR PAVEMENT DELINEATION WORK ONLY

REVISED BY | DATE REVISED

LITTON WANG | KEVIN LEE

CALCULATED-DESIGNED BY | CHECKED BY

FUNCTIONAL SUPERVISOR: KEN KEATON

STATE OF CALIFORNIA - DEPARTMENT OF TRANSPORTATION
Caltrans
NORTH REGION
DIVISION OF ENGINEERING

LAST REVISION 00-00-00 | DATE PLOTTED => 09-OCT-2013 | TIME PLOTTED => 12:46

Dist	COUNTY	ROUTE	POST MILES TOTAL PROJECT	SHEET No.	TOTAL SHEETS
03	Pla	89	T8.6/12.8	55	77

REGISTERED CIVIL ENGINEER 10-7-13 DATE

10-7-13
PLANS APPROVAL DATE

REGISTERED PROFESSIONAL ENGINEER
KEVIN F. LEE
No. 78077
Exp. 9-30-13
CIVIL
STATE OF CALIFORNIA

THE STATE OF CALIFORNIA OR ITS OFFICERS OR AGENTS SHALL NOT BE RESPONSIBLE FOR THE ACCURACY OR COMPLETENESS OF SCANNED COPIES OF THIS PLAN SHEET.

NOTES:

1. FOR ACCURATE RIGHT OF WAY DATA, CONTACT RIGHT OF WAY ENGINEERING AT THE DISTRICT OFFICE.

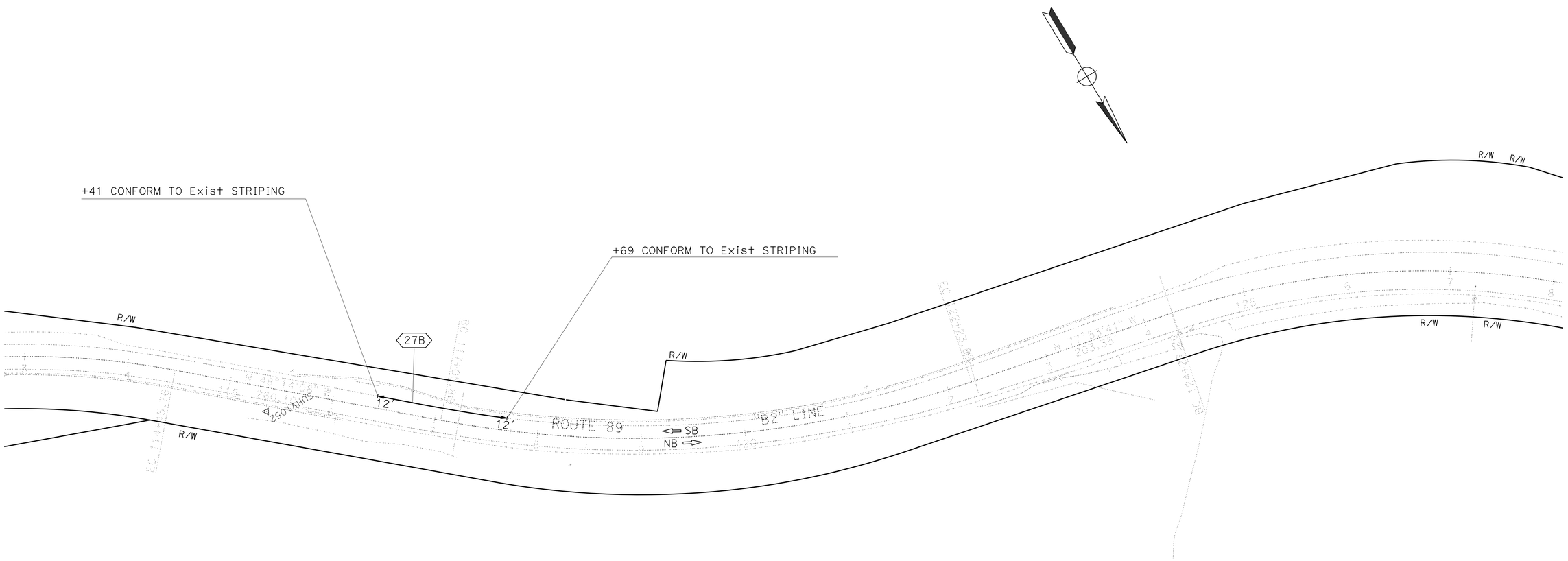

APPROVED FOR PAVEMENT DELINEATION WORK ONLY

PAVEMENT DELINEATION PLAN

SCALE: 1" = 50'

PD-6

REVISED BY	DATE REVISED
LITTON WANG	
KEVIN LEE	

CALCULATED-DESIGNED BY
CHECKED BY

FUNCTIONAL SUPERVISOR
KEN KEATON

STATE OF CALIFORNIA - DEPARTMENT OF TRANSPORTATION
Caltrans
NORTH REGION
DIVISION OF ENGINEERING

LAST REVISION 00-00-00
DATE PLOTTED => 09-OCT-2013
TIME PLOTTED => 12:46

Dist	COUNTY	ROUTE	POST MILES TOTAL PROJECT	SHEET No.	TOTAL SHEETS
03	Pla	89	T8.6/12.8	56	77

REGISTERED CIVIL ENGINEER 10-7-13 DATE

10-7-13
PLANS APPROVAL DATE

REGISTERED PROFESSIONAL ENGINEER
KEVIN F. LEE
No. 78077
Exp. 9-30-13
CIVIL
STATE OF CALIFORNIA

THE STATE OF CALIFORNIA OR ITS OFFICERS OR AGENTS SHALL NOT BE RESPONSIBLE FOR THE ACCURACY OR COMPLETENESS OF SCANNED COPIES OF THIS PLAN SHEET.

NOTES:

1. FOR ACCURATE RIGHT OF WAY DATA, CONTACT RIGHT OF WAY ENGINEERING AT THE DISTRICT OFFICE.

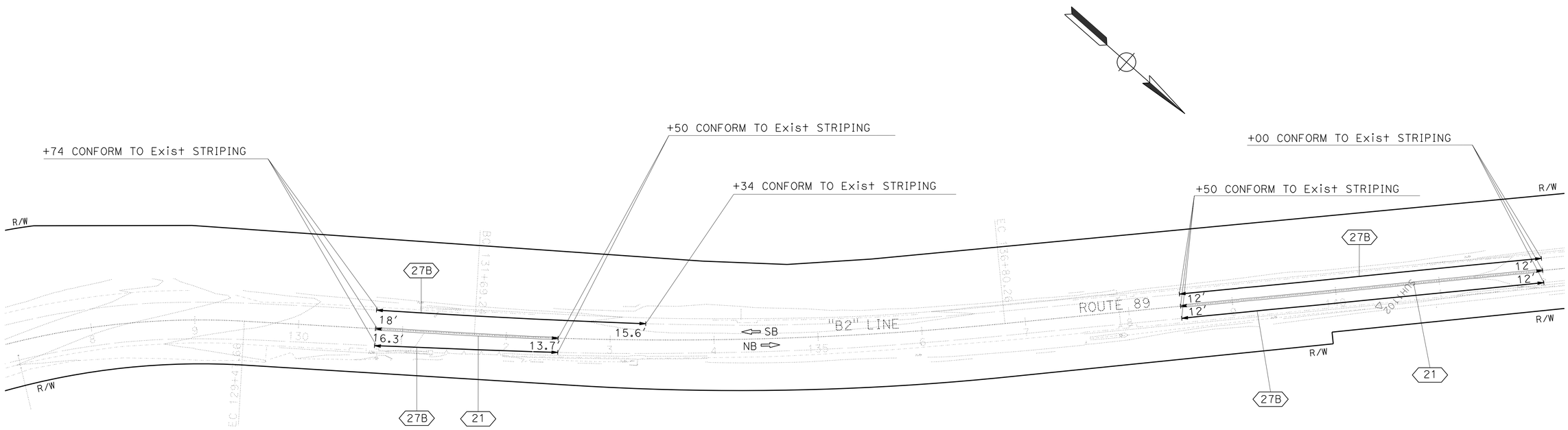

PAVEMENT DELINEATION PLAN

SCALE: 1" = 50'

PD-7

APPROVED FOR PAVEMENT DELINEATION WORK ONLY

STATE OF CALIFORNIA - DEPARTMENT OF TRANSPORTATION
Caltrans
NORTH REGION
DIVISION OF ENGINEERING

FUNCTIONAL SUPERVISOR: KEN KEATON

CALCULATED-DESIGNED BY: LITTON WANG
CHECKED BY: KEVIN LEE

REVISED BY | DATE REVISED

LAST REVISION 00-00-00 | DATE PLOTTED => 09-OCT-2013 | TIME PLOTTED => 12:46

Dist	COUNTY	ROUTE	POST MILES TOTAL PROJECT	SHEET No.	TOTAL SHEETS
03	Pla	89	T8.6/12.8	57	77

REGISTERED CIVIL ENGINEER 10-7-13 DATE

10-7-13
PLANS APPROVAL DATE

REGISTERED PROFESSIONAL ENGINEER
KEVIN F. LEE
No. 78077
Exp. 9-30-13
CIVIL
STATE OF CALIFORNIA

THE STATE OF CALIFORNIA OR ITS OFFICERS OR AGENTS SHALL NOT BE RESPONSIBLE FOR THE ACCURACY OR COMPLETENESS OF SCANNED COPIES OF THIS PLAN SHEET.

NOTES:

1. FOR ACCURATE RIGHT OF WAY DATA, CONTACT RIGHT OF WAY ENGINEERING AT THE DISTRICT OFFICE.

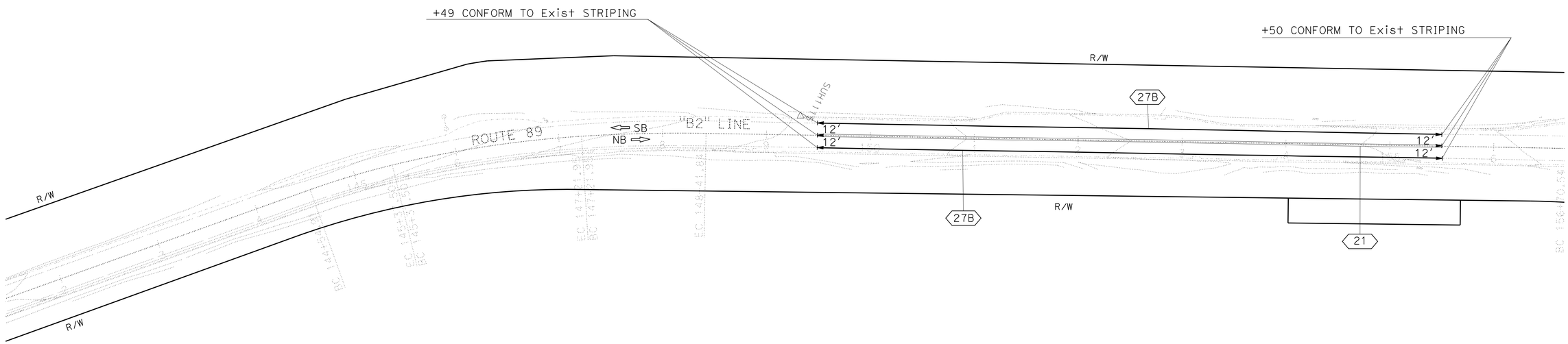

PAVEMENT DELINEATION PLAN

SCALE: 1" = 50'

APPROVED FOR PAVEMENT DELINEATION WORK ONLY

PD-8

REVISED BY	DATE REVISED

CALCULATED-DESIGNED BY: LITTON WANG
CHECKED BY: KEVIN LEE
FUNCTIONAL SUPERVISOR: KEN KEATON

STATE OF CALIFORNIA - DEPARTMENT OF TRANSPORTATION
Caltrans
NORTH REGION
DIVISION OF ENGINEERING

LAST REVISION 00-00-00
DATE PLOTTED => 09-OCT-2013
TIME PLOTTED => 12:46

Dist	COUNTY	ROUTE	POST MILES TOTAL PROJECT	SHEET No.	TOTAL SHEETS
03	Pla	89	T8.6/12.8	58	77

REGISTERED CIVIL ENGINEER 10-7-13 DATE

10-7-13
PLANS APPROVAL DATE

REGISTERED PROFESSIONAL ENGINEER
KEVIN F. LEE
No. 78077
Exp. 9-30-13
CIVIL
STATE OF CALIFORNIA

THE STATE OF CALIFORNIA OR ITS OFFICERS OR AGENTS SHALL NOT BE RESPONSIBLE FOR THE ACCURACY OR COMPLETENESS OF SCANNED COPIES OF THIS PLAN SHEET.

NOTES:

1. FOR ACCURATE RIGHT OF WAY DATA, CONTACT RIGHT OF WAY ENGINEERING AT THE DISTRICT OFFICE.

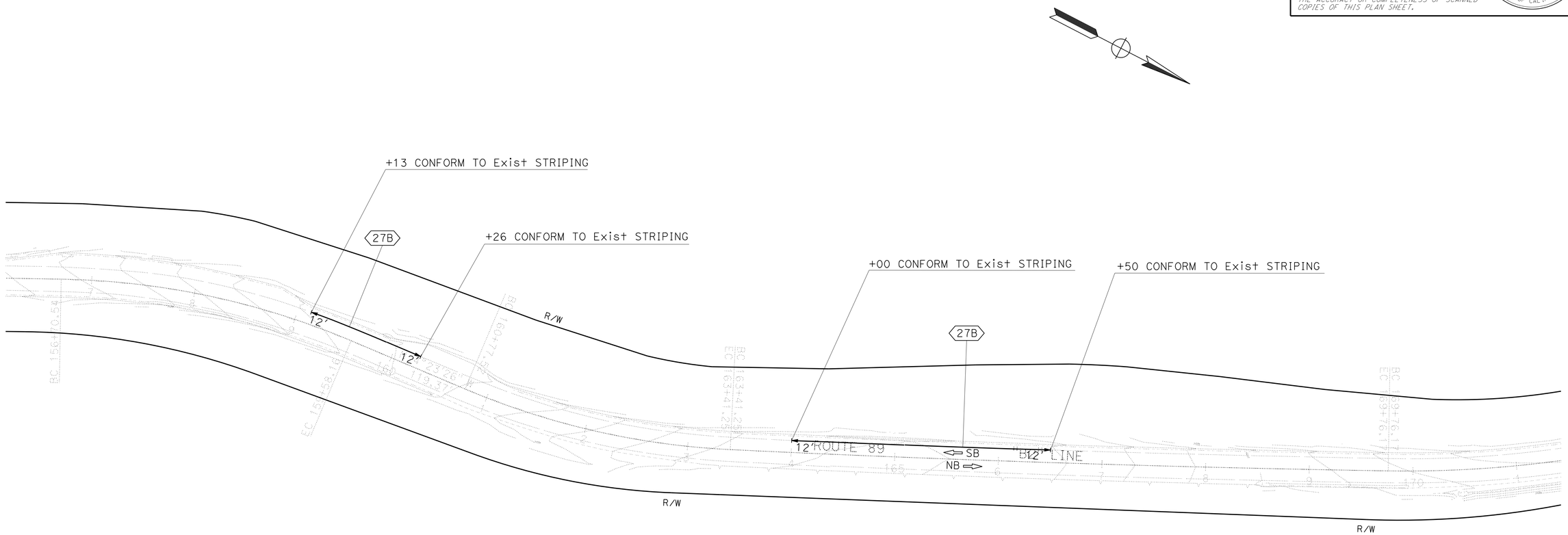

PAVEMENT DELINEATION PLAN

SCALE: 1" = 50'

PD-9

APPROVED FOR PAVEMENT DELINEATION WORK ONLY

STATE OF CALIFORNIA - DEPARTMENT OF TRANSPORTATION
Caltrans
NORTH REGION
DIVISION OF ENGINEERING

FUNCTIONAL SUPERVISOR: KEN KEATON

CALCULATED-DESIGNED BY: LITTON WANG
CHECKED BY: KEVIN LEE

REVISED BY
DATE REVISED

LAST REVISION 00-00-00
DATE PLOTTED => 09-OCT-2013
TIME PLOTTED => 12:46

Dist	COUNTY	ROUTE	POST MILES TOTAL PROJECT	SHEET No.	TOTAL SHEETS
03	Pla	89	T8.6/12.8	59	77

REGISTERED CIVIL ENGINEER 10-7-13 DATE

10-7-13
PLANS APPROVAL DATE

REGISTERED PROFESSIONAL ENGINEER
KEVIN F. LEE
No. 78077
Exp. 9-30-13
CIVIL
STATE OF CALIFORNIA

THE STATE OF CALIFORNIA OR ITS OFFICERS OR AGENTS SHALL NOT BE RESPONSIBLE FOR THE ACCURACY OR COMPLETENESS OF SCANNED COPIES OF THIS PLAN SHEET.

NOTES:

1. FOR ACCURATE RIGHT OF WAY DATA, CONTACT RIGHT OF WAY ENGINEERING AT THE DISTRICT OFFICE.

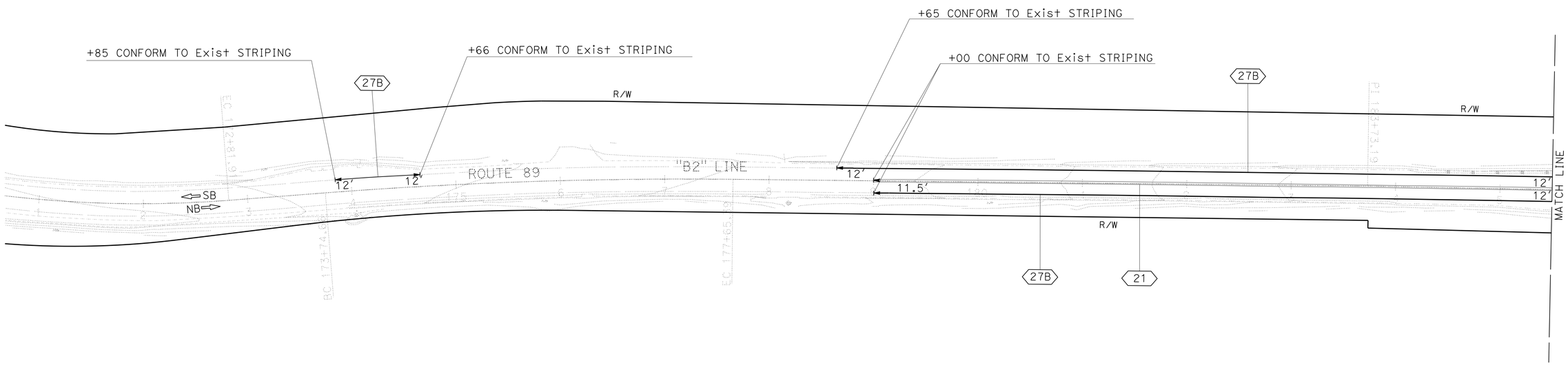

PAVEMENT DELINEATION PLAN

SCALE: 1" = 50'

PD-10

APPROVED FOR PAVEMENT DELINEATION WORK ONLY

STATE OF CALIFORNIA - DEPARTMENT OF TRANSPORTATION
Caltrans
NORTH REGION
DIVISION OF ENGINEERING

FUNCTIONAL SUPERVISOR: KEN KEATON
CALCULATED-DESIGNED BY: LITTON WANG
CHECKED BY: KEVIN LEE
REVISED BY
DATE REVISED

LAST REVISION 00-00-00
DATE PLOTTED => 09-OCT-2013
TIME PLOTTED => 12:46

Dist	COUNTY	ROUTE	POST MILES TOTAL PROJECT	SHEET No.	TOTAL SHEETS
03	Pla	89	T8.6/12.8	60	77

REGISTERED CIVIL ENGINEER 10-7-13 DATE

10-7-13
PLANS APPROVAL DATE

REGISTERED PROFESSIONAL ENGINEER
KEVIN F. LEE
No. 78077
Exp. 9-30-13
CIVIL
STATE OF CALIFORNIA

THE STATE OF CALIFORNIA OR ITS OFFICERS OR AGENTS SHALL NOT BE RESPONSIBLE FOR THE ACCURACY OR COMPLETENESS OF SCANNED COPIES OF THIS PLAN SHEET.

NOTES:

1. FOR ACCURATE RIGHT OF WAY DATA, CONTACT RIGHT OF WAY ENGINEERING AT THE DISTRICT OFFICE.

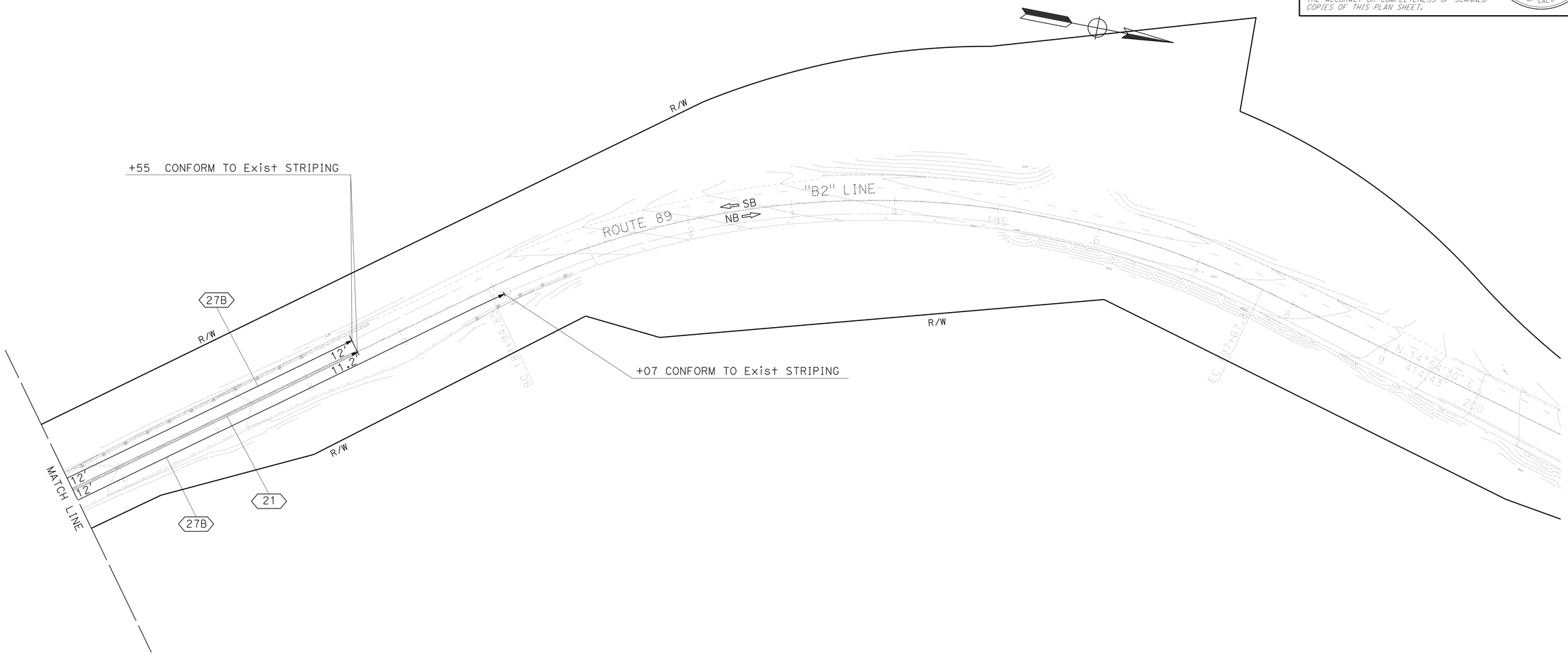

APPROVED FOR PAVEMENT DELINEATION WORK ONLY

PAVEMENT DELINEATION PLAN

SCALE: 1" = 50'

PD-11

STATE OF CALIFORNIA - DEPARTMENT OF TRANSPORTATION
Caltrans
NORTH REGION
DIVISION OF ENGINEERING

FUNCTIONAL SUPERVISOR: KEN KEATON
CALCULATED-DESIGNED BY: LITTON WANG
CHECKED BY: KEVIN LEE
REVISED BY
DATE REVISED

LAST REVISION 00-00-00
DATE PLOTTED => 09-OCT-2013
TIME PLOTTED => 12:47

Dist	COUNTY	ROUTE	POST MILES TOTAL PROJECT	SHEET No.	TOTAL SHEETS
03	Pla	89	T8.6/12.8	61	77

REGISTERED CIVIL ENGINEER 10-7-13 DATE

10-7-13
PLANS APPROVAL DATE

REGISTERED PROFESSIONAL ENGINEER
KEVIN F. LEE
No. 78077
Exp. 9-30-13
CIVIL
STATE OF CALIFORNIA

THE STATE OF CALIFORNIA OR ITS OFFICERS OR AGENTS SHALL NOT BE RESPONSIBLE FOR THE ACCURACY OR COMPLETENESS OF SCANNED COPIES OF THIS PLAN SHEET.

NOTES:

1. FOR ACCURATE RIGHT OF WAY DATA, CONTACT RIGHT OF WAY ENGINEERING AT THE DISTRICT OFFICE.

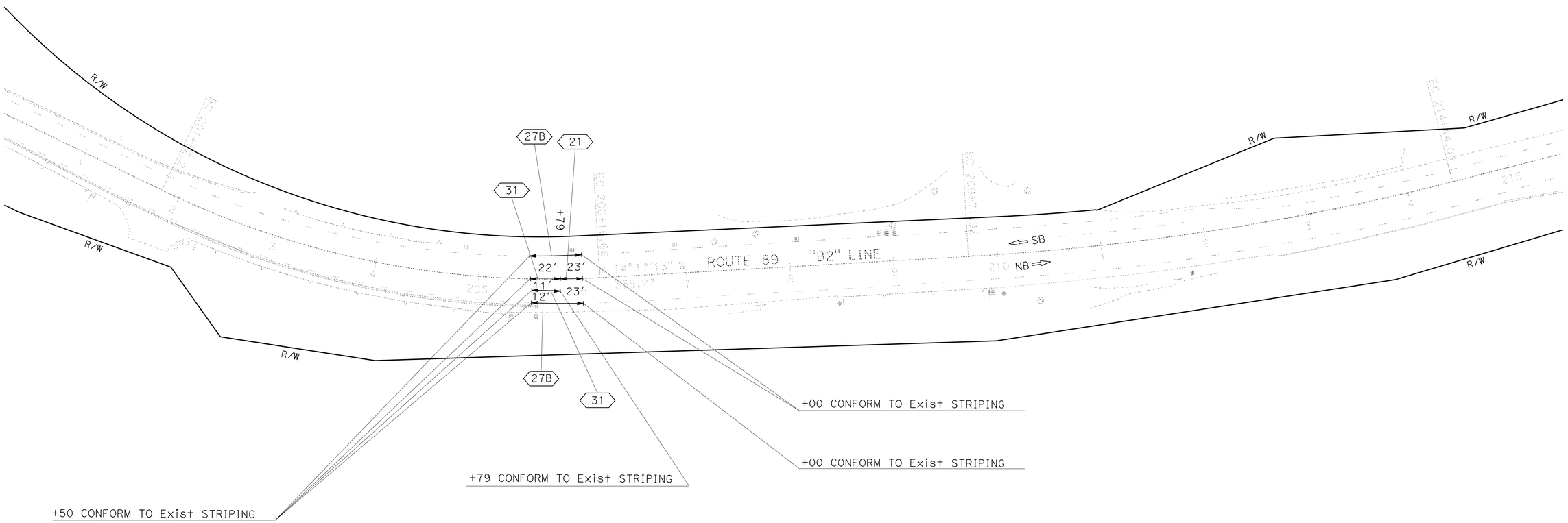

APPROVED FOR PAVEMENT DELINEATION WORK ONLY

PAVEMENT DELINEATION PLAN

SCALE: 1" = 50'

PD-12

STATE OF CALIFORNIA - DEPARTMENT OF TRANSPORTATION
Caltrans
NORTH REGION
DIVISION OF ENGINEERING

FUNCTIONAL SUPERVISOR: KEN KEATON

CALCULATED-DESIGNED BY: LITTON WANG
CHECKED BY: KEVIN LEE

REVISED BY
DATE REVISED

LAST REVISION 00-00-00
DATE PLOTTED => 09-OCT-2013
TIME PLOTTED => 12:47

Dist	COUNTY	ROUTE	POST MILES TOTAL PROJECT	SHEET No.	TOTAL SHEETS
03	Pla	89	T8.6/12.8	62	77

REGISTERED CIVIL ENGINEER 10-7-13 DATE

10-7-13
PLANS APPROVAL DATE

REGISTERED PROFESSIONAL ENGINEER
KEVIN F. LEE
No. 78077
Exp. 9-30-13
CIVIL
STATE OF CALIFORNIA

THE STATE OF CALIFORNIA OR ITS OFFICERS OR AGENTS SHALL NOT BE RESPONSIBLE FOR THE ACCURACY OR COMPLETENESS OF SCANNED COPIES OF THIS PLAN SHEET.

NOTES:

1. FOR ACCURATE RIGHT OF WAY DATA, CONTACT RIGHT OF WAY ENGINEERING AT THE DISTRICT OFFICE.

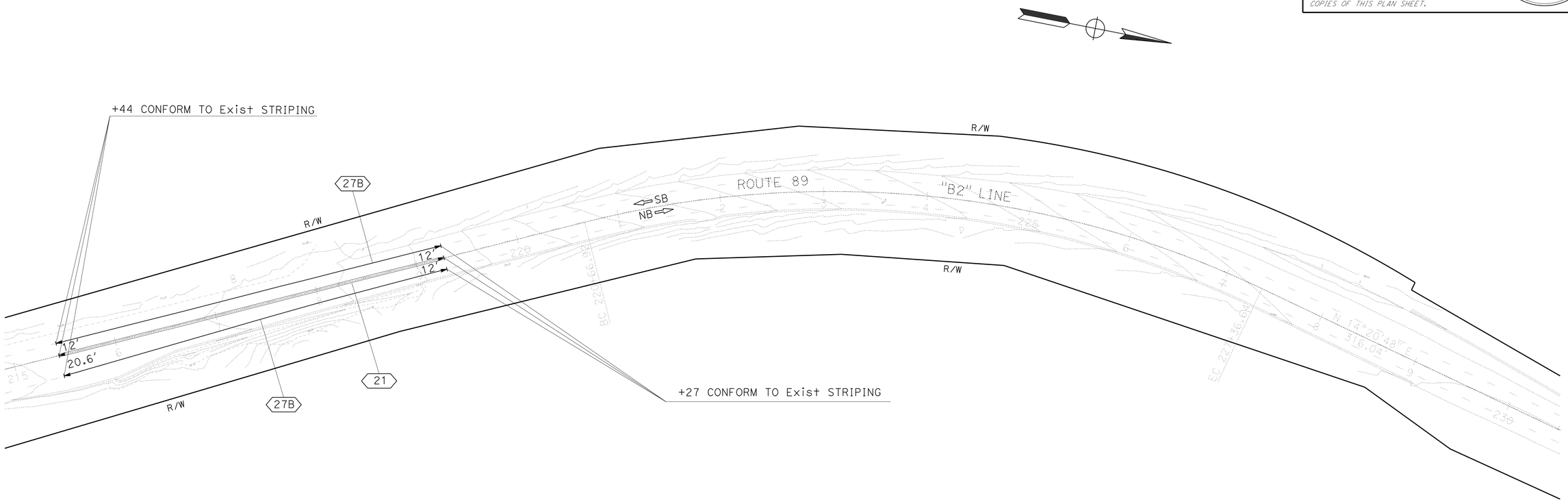

APPROVED FOR PAVEMENT DELINEATION WORK ONLY

PAVEMENT DELINEATION PLAN

SCALE: 1" = 50'

PD-13

REVISED BY	LITTON WANG
DATE REVISED	KEVIN LEE
CALCULATED-DESIGNED BY	
CHECKED BY	
FUNCTIONAL SUPERVISOR	KEN KEATON

STATE OF CALIFORNIA - DEPARTMENT OF TRANSPORTATION
Caltrans
NORTH REGION
DIVISION OF ENGINEERING

LAST REVISION 00-00-00 | DATE PLOTTED => 09-OCT-2013 | TIME PLOTTED => 12:47

Dist	COUNTY	ROUTE	POST MILES TOTAL PROJECT	SHEET No.	TOTAL SHEETS
03	Pla	89	T8.6/12.8	63	77

REGISTERED CIVIL ENGINEER 10-7-13 DATE

10-7-13
PLANS APPROVAL DATE

REGISTERED PROFESSIONAL ENGINEER KEVIN F. LEE No. 78077 Exp. 9-30-13 CIVIL STATE OF CALIFORNIA

THE STATE OF CALIFORNIA OR ITS OFFICERS OR AGENTS SHALL NOT BE RESPONSIBLE FOR THE ACCURACY OR COMPLETENESS OF SCANNED COPIES OF THIS PLAN SHEET.

PAVEMENT DELINEATION ITEMS

SHEET No.	LOCATION/STATION	4" TWO-COMPONENT PAINT TRAFFIC STRIPE	4" THERMOPLASTIC TRAFFIC STRIPE (RECESSED)	4" THERMOPLASTIC TRAFFIC STRIPE (RECESSED)	4" THERMOPLASTIC TRAFFIC STRIPE (RECESSED, BROKEN 36-12)	8" THERMOPLASTIC TRAFFIC STRIPE (RECESSED)	TWO-COMPONENT PAINT PAVEMENT MARKING
		DETAIL 27B	DETAIL 21	DETAIL 31		DETAIL 38A	TYPE III (L) ARROW
		LF	LF	LF	LF	LF	SQFT
PD-1	"B2" 17+79 TO 24+00	1,086	932			278	126
PD-2	"B2" 49+22 TO 54+50	978	900				
PD-3	"B2" 69+00 TO 72+50	700	700				
PD-4	"B2" 84+22 TO 84+94	72					
PD-4	"B2" 89+75 TO 92+70	295					
PD-5	"B2" 104+60 TO 107+31	542	542				
PD-6	"B2" 116+41 TO 117+69	128					
PD-7	"B2" 130+74 TO 133+34	436	352				
PD-7	"B2" 138+50 TO 142+00	700	700				
PD-8	"B2" 149+49 TO 155+50	1202	1202				
PD-9	"B2" 159+13 TO 160+26	113					
PD-9	"B2" 164+00 TO 166+50	250					
PD-10	"B2" 173+85 TO 174+66	81					
PD-10 to PD-11	"B2" 178+65 TO 190+07	2097	1910				
PD-12	"B2" 205+50 TO 206+00	100	43	55	55		
PD-13	"B2" 215+44 TO 219+27	766	766				
	SUBTOTAL		8047	55			
	TOTAL	9546	8102		55	278	126

PAVEMENT DELINEATION QUANTITIES

PDQ-1

STATE OF CALIFORNIA - DEPARTMENT OF TRANSPORTATION
Caltrans
NORTH REGION
DIVISION OF ENGINEERING

FUNCTIONAL SUPERVISOR: KEN KEATON
CALCULATED-DESIGNED BY: LITTON WANG
CHECKED BY: KEVIN LEE
REVISED BY
DATE REVISED

LAST REVISION 00-00-00
DATE PLOTTED => 09-OCT-2013
TIME PLOTTED => 12:47

Dist	COUNTY	ROUTE	POST MILES TOTAL PROJECT	SHEET No.	TOTAL SHEETS
03	Pla	89	T8.6/12.8	64	77

REGISTERED CIVIL ENGINEER 10-7-13 DATE

10-7-13
PLANS APPROVAL DATE

REGISTERED PROFESSIONAL ENGINEER KEVIN F. LEE No. 78077 Exp. 9-30-13 CIVIL STATE OF CALIFORNIA

THE STATE OF CALIFORNIA OR ITS OFFICERS OR AGENTS SHALL NOT BE RESPONSIBLE FOR THE ACCURACY OR COMPLETENESS OF SCANNED COPIES OF THIS PLAN SHEET.

ROADWAY ITEMS

LOCATION	HOT MIX ASPHALT (TYPE A)	CLASS 2 AGGREGATE BASE	ROADWAY EXCAVATION	MINOR CONCRETE (CURB)	TACK COAT	COLD PLANE ASPHALT CONCRETE PAVEMENT	REMOVE CONCRETE CURB	CONCRETE BACKFILL	SHOULDER BACKING	DITCH EXCAVATION
	TON	CY	CY	CY	TON	SQYD	LF	CY	TON	CY
"B2" 17+79 TO "A2" 19+36	25		17	2.9	0.04	106	71			
"B2" 19+36 TO "B2" 24+00	297		12		1.11	2717				
"B2" 49+22 TO "B2" 50+00	8		2	6.1	0.01	35	50			
"B2" 50+00 TO "B2" 54+10	178		1	26.6	0.75	1349	50			
"B2" 54+50 TO "B2" 56+20							170	9.4		
"B2" 65+60 TO "B2" 67+54							194	10.8		
"B2" 69+00 TO "B2" 72+50	138		4		0.56	1199				
"B2" 84+22 TO "B2" 84+95	12		1	5.8	0.04	81			2	
"B2" 89+75 TO "B2" 92+25			1		0.06	144				
"B2" 104+61 TO "B2" 107+31	100		1		0.43	877				
"B2" 109+60 TO "B2" 111+00										6
"B2" 111+65 TO "B2" 113+50										15
"B2" 116+41 TO "B2" 117+68	3				0.05	117				
"B2" 130+75 TO "B2" 132+50	83		3	3.3	0.38	901	81		2	
"B2" 132+50 TO "B2" 133+34	5			3.5	0.02	47	85			
"B2" 138+50 TO "B2" 142+00	46		7		0.56	1234				
"B2" 149+50 TO "B2" 155+50	365		4		1.10	2374				
"B2" 159+13 TO "B2" 160+26	4			11.6	0.04	88	122			
"B2" 164+00 TO "B2" 166+50	3			10.2	0.06	133	250			
"B2" 173+86 TO "B2" 174+67	4				0.04	81				
"B2" 178+99 TO "B2" 179+59	50		1	4.4	0.04		60			
"B2" 178+65 TO "B2" 188+55	333		2		1.71	3512				
"B2" 188+55 TO "B2" 190+07	50				0.20	238				
"B2" 205+58TO "B2" 206+00	98	98	245		0.72					
"B2" 215+44 TO "B2" 219+27	128		11		0.77	1681				
SUBTOTAL	1930	98	312	74.4	8.69	16,914	1133	20.2	4	21
TOTAL FROM DRAINAGE QUANTITIES		152.62		34.10			719			
TOTAL FROM OVERSIDE DRAIN QUANTITY	1						13			
TOTAL	1931	250.62	312	108.90	8.69	16,914	1865	20.2	4	21

(N) - NOT A SEPARATE PAY ITEM, FOR INFORMATION ONLY

TEMPORARY FENCE (TYPE ESA)

STATION	LF
"B2" 70+27 TO "B2" 70+57	94
TOTAL	94

TEMPORARY CONSTRUCTION BMP

STATION	TEMPORARY FIBER ROLL	TEMPORARY COVER
	LF	SQYD
"B2" 15+00 TO 200+00		1084
"B2" 109+60 TO 111+22	324	
"B2" 111+65 TO 113+69	408	
TOTAL	732	1084

OVERSIDE DRAIN

STATION	PLACE HMA (Misc AREA)	HOT MIX ASPHALT (TYPE A)	REMOVE CONCRETE CURB
	SQYD	TON	LF
"B2" 110+46.00	0.5	1	13
TOTAL	0.5	1*	13*

* FOR TOTAL QUANTITY, SEE ROADWAY ITEMS TABLE.

TEMPORARY DRAINAGE INLET PROTECTION

STATION	TEMPORARY DRAINAGE INLET PROTECTION
	EA
"B2" 15+00 TO 79+00	10
"B2" 79+00 TO 120+00	10
"B2" 120+00 TO 155+00	10
"B2" 155+00 TO 220+00	13
TOTAL	43

SUMMARY OF QUANTITIES

Q-1

REVISED BY | DATE REVISED
LITTON WANG | KEVIN LEE
CALCULATED-DESIGNED BY | CHECKED BY
FUNCTIONAL SUPERVISOR: KEN KEATON

STATE OF CALIFORNIA - DEPARTMENT OF TRANSPORTATION
Caltrans
NORTH REGION DIVISION OF ENGINEERING

LAST REVISION 00-00-00 | DATE PLOTTED => 09-OCT-2013 | TIME PLOTTED => 12:47

Dist	COUNTY	ROUTE	POST MILES TOTAL PROJECT	SHEET No.	TOTAL SHEETS
03	Pla	89	T8.6/12.8	65	77

LICENSED LANDSCAPE ARCHITECT

10-7-13
PLANS APPROVAL DATE

LICENSED LANDSCAPE ARCHITECT JAMES G. WILLIAMSON No. 5415 Signature 02-28-14 Renewal Date 10-07-13 Date STATE OF CALIFORNIA

THE STATE OF CALIFORNIA OR ITS OFFICERS OR AGENTS SHALL NOT BE RESPONSIBLE FOR THE ACCURACY OR COMPLETENESS OF SCANNED COPIES OF THIS PLAN SHEET.

EROSION CONTROL (TYPE 1)

SEQUENCE	BID ITEM	MATERIAL		APPLICATION RATE	DEPTH
		DESCRIPTION	TYPE		
STEP 1	COMPOST	COMPOST	MEDIUM	--	4"
STEP 2	INCORPORATE MATERIALS	COMPOST	--	--	12"-18"
STEP 3	EROSION CONTROL (DRY SEED)	SEED	--	165 LB/ACRE	--
		FERTILIZER	ORGANIC	600 LB/ACRE	--
STEP 4	STRAW	STRAW	PINE NEEDLES	--	2"

EROSION CONTROL (TYPE 2)

SEQUENCE	BID ITEM	MATERIAL			APPLICATION RATE
		DESCRIPTION	TYPE	FASTENER	
STEP 1	EROSION CONTROL (DRY SEED)	SEED	--	--	165 LB/ACRE
		FERTILIZER	ORGANIC	--	600 LB/ACRE
STEP 2	ROLLED EROSION CONTROL PRODUCT (BLANKET)	BLANKET	TYPE A	STEEL STAPLES	--

EROSION CONTROL (TYPE 3)

SEQUENCE	BID ITEM	MATERIAL		APPLICATION RATE	DEPTH
		DESCRIPTION	TYPE		
STEP 1	EROSION CONTROL (DRY SEED)	SEED	--	165 LB/ACRE	--
		FERTILIZER	ORGANIC	600 LB/ACRE	--
STEP 2	STRAW	STRAW	PINE NEEDLES	--	2"

SEED MIX

BOTANICAL NAME (COMMON NAME)	PERCENT GERMINATION (MINIMUM)	POUNDS PURE LIVE SEED PER ACRE (SLOPE MEASUREMENT)
BROMUS CARINATUS [1] (CALIFORNIA BROME)	70	30
ELYMUS ELYMOIDES [1] (SQUIRRELTAIL)	70	15
HORDEUM BRACHYANTHERUM [1] (MEADOW BARLEY)	70	30
LEYMUS TRITICOIDES [1] (CREEPING WILDRYE)	70	15
LOTUS PURSHIANUS [1] (PERSHINGS LOTUS)	50	15
PURSHIA TRIDENTATA [1] (ANTELOPE BUSH)	70	60
	TOTAL	165

[1] SEED PRODUCED IN NORTHERN SIERRA NEVADA RANGE ABOVE THE 2500 FOOT ELEVATION LEVEL.

EROSION CONTROL ITEMS

STATION	LOCATION	COMPOST	INCORPORATE MATERIALS	EROSION CONTROL (DRY SEED)	STRAW	ROLLED EROSION CONTTROL PRODUCT (BLANKET)
		SQFT	SQFT	SQFT	SQFT	SQFT
"B2" 109+60 TO 111+21.73	L†	1,200	1,200	1,200	1,200	--
"B2" 111+65.06 TO 113+68.75	L†	1,800	1,800	1,800	1,800	--
"B2" 107+30 TO 107+50	R†	--	--	100	100	100
TOTAL		3,000	3,000	3,100	3,100	100

APPROVED FOR EROSION CONTROL WORK ONLY

EROSION CONTROL DETAILS

NO SCALE

ECD-1

STATE OF CALIFORNIA - DEPARTMENT OF TRANSPORTATION
Caltrans® LANDSCAPE ARCHITECTURE

SENIOR LANDSCAPE ARCHITECT: T. CHRIS JOHNSON
CALCULATED-DESIGNED BY: J. KURTH
CHECKED BY: J. WILLIAMSON
REVISED BY
DATE REVISED

LAST REVISION 06-21-13
DATE PLOTTED => 09-OCT-2013
TIME PLOTTED => 12:47

Dist	COUNTY	ROUTE	POST MILES TOTAL PROJECT	SHEET No.	TOTAL SHEETS
03	Pla	89	T8.6/12.8	66	77

LICENSED LANDSCAPE ARCHITECT

10-7-13
PLANS APPROVAL DATE

LICENSED LANDSCAPE ARCHITECT JAMES G. WILLIAMSON No. 5415 Signature 02-28-14 Renewal Date 10-07-13 Date STATE OF CALIFORNIA

THE STATE OF CALIFORNIA OR ITS OFFICERS OR AGENTS SHALL NOT BE RESPONSIBLE FOR THE ACCURACY OR COMPLETENESS OF SCANNED COPIES OF THIS PLAN SHEET.

LEGEND:

- - - - - - EROSION CONTROL (TYPE 1)
  - -COMPOST
  - -INCORPORATE MATERIALS
  - -EROSION CONTROL (DRY SEED)
  - -STRAW

||||||||||||||| EROSION CONTROL (TYPE 2)
  - -EROSION CONTROL (DRY SEED)
  - -STRAW

EROSION CONTROL (TYPE 3)
  - -EROSION CONTROL (DRY SEED)
  - -ROLLED EROSION CONTROL PRODUCT (BLANKET)

NOTE:

1. FOR ROLLED EROSION CONTROL PRODUCT (BLANKET) INSTALLATION, SEE STANDARD PLAN T55.

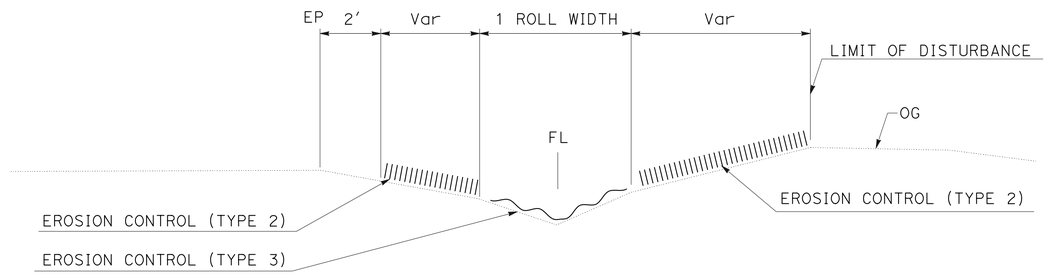

EROSION CONTROL DETAIL

"B2" 107+30 TO 107+70

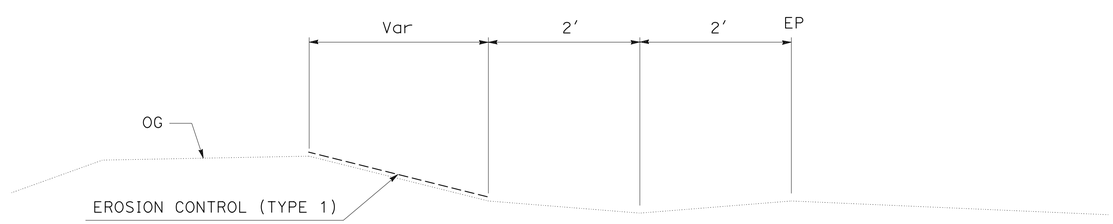

BERM EROSION CONTROL DETAIL

"B2" 109+60 TO 111+21.73
"B2" 111+65.06 TO 113+68.75

APPROVED FOR EROSION CONTROL WORK ONLY

EROSION CONTROL DETAILS

NO SCALE

ECD-2

STATE OF CALIFORNIA - DEPARTMENT OF TRANSPORTATION
Caltrans® LANDSCAPE ARCHITECTURE

SENIOR LANDSCAPE ARCHITECT: T. CHRIS JOHNSON

CALCULATED-DESIGNED BY: J. KURTH
CHECKED BY: J. WILLIAMSON

REVISED BY | DATE REVISED

LAST REVISION 06-24-13 | DATE PLOTTED => 09-OCT-2013 | TIME PLOTTED => 12:47

M

Maint	MAINTENANCE
Max	MAXIMUM
MB	METAL BEAM
MBB	METAL BEAM BARRIER
MBGR	METAL BEAM GUARD RAILING
Med	MEDIAN
MGS	MIDWEST GUARDRAIL SYSTEM
MH	MANHOLE
Min	MINIMUM
Misc	MISCELLANEOUS
Misc I & S	MISCELLANEOUS IRON AND STEEL
Mkr	MARKER
Mod	MODIFIED,
	MODIFY
Mon	MONUMENT
MP	METAL PLATE
MPGR	METAL PLATE GUARD RAILING
MR	MOVEMENT RATING
MSE	MECHANICALLY STABILIZED EMBANKMENT
Mt	MOUNTAIN, MOUNT
Mtl	MATERIAL
MVP	MAINTENANCE VEHICLE PULLOUT

N

N	NORTH
NB	NORTHBOUND
No.	NUMBER (MUST HAVE PERIOD)
Nos.	NUMBERS (MUST HAVE PERIOD)
NPS	NOMINAL PIPE SIZE
NS	NEAR SIDE
NSP	NEW STANDARD PLAN
NTS	NOT TO SCALE

O

Oblr	OBLITERATE
OC	OVERCROSSING
OD	OUTSIDE DIAMETER
OF	OUTSIDE FACE
OG	ORIGINAL GROUND
OGAC	OPEN GRADED ASPHALT CONCRETE
OGFC	OPEN GRADED FRICTION COURSE
OH	OVERHEAD
OHWM	ORDINARY HIGH WATER MARK
O-O	OUT TO OUT
Opp	OPPOSITE
OSD	OVERSIDE DRAIN

P

P	PAGE
PAP	PERFORATED ALUMINUM PIPE
PB	PULL BOX
PC	POINT OF CURVATURE,
	PRECAST
PCC	POINT OF COMPOUND CURVE,
	PORTLAND CEMENT CONCRETE
PCMS	PORTABLE CHANGEABLE MESSAGE SIGN
PCP	PERFORATED CONCRETE PIPE,
	PRESTRESSED CONCRETE PIPE
PCVC	POINT OF COMPOUND VERTICAL CURVE
PEC	PERMIT TO ENTER AND CONSTRUCT
Ped	PEDESTRIAN
Ped OC	PEDESTRIAN OVERCROSSING
Ped UC	PEDESTRIAN UNDERCROSSING
Perm Mtl	PERMEABLE MATERIAL

P continued

PG	PROFILE GRADE
PI	POINT OF INTERSECTION
PJP	PARTIAL JOINT PENETRATION
Pkwy	PARKWAY
ℙL,PL	PLATE
P/L	PROPERTY LINE
PM	POST MILE,
	TIME FROM NOON TO MIDNIGHT
PN	PAVING NOTCH
POC	POINT OF HORIZONTAL CURVE
POT	POINT OF TANGENT
POVC	POINT OF VERTICAL CURVE
PP	PIPE PILE,
	PLASTIC PIPE,
	POWER POLE
PPL	PREFORMED PERMEABLE LINER
PPP	PERFORATED PLASTIC PIPE
PRC	POINT OF REVERSE CURVE
PRF	PAVEMENT REINFORCING FABRIC
PRVC	POINT OF REVERSE VERTICAL CURVE
PS&E	PLANS, SPECIFICATIONS AND ESTIMATES
PS, P/S	PRESTRESSED
PSP	PERFORATED STEEL PIPE
PT	POINT OF TANGENCY
PVC	POLYVINYL CHLORIDE
Pvmt	PAVEMENT

Q

Qty	QUANTITY

R

R	RADIUS
R & D	REMOVE AND DISPOSE
R & S	REMOVE AND SALVAGE
R/C	RATE OF CHANGE
RCA	REINFORCED CONCRETE ARCH
RCB	REINFORCED CONCRETE BOX
RCP	REINFORCED CONCRETE PIPE
RCPA	REINFORCED CONCRETE PIPE ARCH
Rd	ROAD
Reinf	REINFORCED,
	REINFORCEMENT,
	REINFORCING
Rel	RELOCATE
Repl	REPLACEMENT
Ret	RETAINING
Rev	REVISED, REVISION
Rdwy	ROADWAY
RHMA	RUBBERIZED HOT MIX ASPHALT
Riv	RIVER
RM	ROAD-MIXED
RP	RADIUS POINT,
	REFERENCE POINT
RR	RAILROAD
RSP	ROCK SLOPE PROTECTION,
	REVISED STANDARD PLAN
Rt	RIGHT
Rte	ROUTE
RW	REDWOOD,
	RETAINING WALL
R/W	RIGHT OF WAY
Rwy	RAILWAY

S

S	SOUTH,
	SUPPLEMENT
SAE	STRUCTURE APPROACH EMBANKMENT
Salv	SALVAGE
SAPP	STRUCTURAL ALUMINUM PLATE PIPE
SB	SOUTHBOUND
SC	SAND CUSHION
SCSP	SLOTTED CORRUGATED STEEL PIPE
SD	STORM DRAIN
Sec	SECOND,
	SECTION
Sep	SEPARATION
SG	SUBGRADE
Shld	SHOULDER
Sht	SHEET
Sim	SIMILAR
℄	STATION LINE
SM	SELECTED MATERIAL
Spec	SPECIAL,
	SPECIFICATIONS
SPP	SLOTTED PLASTIC PIPE
SS	SLOPE STAKE
SSBM	STRAP AND SADDLE BRACKET METHOD
SSD	STRUCTURAL SECTION DRAIN
SSPA	STRUCTURAL STEEL PLATE ARCH
SSPP	STRUCTURAL STEEL PLATE PIPE
SSPPA	STRUCTURAL STEEL PLATE PIPE ARCH
SSRP	STEEL SPIRAL RIB PIPE
St	STREET
Sta	STATION
STBB	SINGLE THRIE BEAM BARRIER
Std	STANDARD
Str	STRUCTURE
Surf	SURFACING
SW	SIDEWALK,
	SOUND WALL
Swr	SEWER
Sym	SYMMETRICAL
S4S	SURFACE 4 SIDES

T

T	SEMI-TANGENT
Tan	TANGENT
TBB	THRIE BEAM BARRIER
Tbr	TIMBER
TC	TOP OF CURB
TCB	TRAFFIC CONTROL BOX
TCE	TEMPORARY CONSTRUCTION EASEMENT
Tel	TELEPHONE
Temp	TEMPORARY
TG	TOP OF GRADE
Tot	TOTAL
TP	TELEPHONE POLE
TPB	TREATED PERMEABLE BASE
TPM	TREATED PERMEABLE MATERIAL
Trans	TRANSITION

T continued

TS	TRANSVERSE,
	TRAFFIC SIGNAL,
	TUBULAR STEEL
Typ	TYPICAL

U

UC	UNDERCROSSING
UD	UNDERDRAIN
UG	UNDERGROUND
UON	UNLESS OTHERWISE NOTED
UP	UNDERPASS

V

V	VALVE,
	DESIGN SPEED
Var	VARIABLE,
	VARIES
VC	VERTICAL CURVE
VCP	VITRIFIED CLAY PIPE
Vert	VERTICAL
Via	VIADUCT
Vol	VOLUME

W

W	WEST,
	WIDTH
WB	WESTBOUND
WH	WEEP HOLE
WM	WIRE MESH
WS	WATER SURFACE
WSP	WELDED STEEL PIPE
Wt	WEIGHT
WV	WATER VALVE
WW	WINGWALL
WWLOL	WINGWALL LAYOUT LINE

X

X Sec	CROSS SECTION
Xing	CROSSING

Y

Yr	YEAR
Yrs	YEARS

Dist	COUNTY	ROUTE	POST MILES TOTAL PROJECT	SHEET No.	TOTAL SHEETS
03	Pla	89	T8.6/12.8	67	77

Grace M. Tsushima
REGISTERED CIVIL ENGINEER

July 19, 2013
PLANS APPROVAL DATE

REGISTERED PROFESSIONAL ENGINEER
Grace M. Tsushima
No. C49814
Exp. 9-30-14
CIVIL
STATE OF CALIFORNIA

THE STATE OF CALIFORNIA OR ITS OFFICERS OR AGENTS SHALL NOT BE RESPONSIBLE FOR THE ACCURACY OR COMPLETENESS OF SCANNED COPIES OF THIS PLAN SHEET.

TO ACCOMPANY PLANS DATED 10-7-13

UNIT OF MEASUREMENT SYMBOLS:

Some of the symbols used in the project plan quantity tables and in the Bid Item List are:

TABLE A

SYMBOL USED	DEFINITIONS
ACRE	ACRE
CF	CUBIC FOOT
CY	CUBIC YARD
EA	EACH
GAL	GALLON
LB	POUND
LF	LINEAR FOOT
SQFT	SQUARE FOOT
SQYD	SQUARE YARD
STA	100 FEET
TAB	TABLET
TON	2,000 POUNDS

Some of the symbols used in the plans other than in the project plan quantity tables are:

TABLE B

SYMBOL USED	DEFINITIONS
ksi	KIPS PER SQUARE INCH
ksf	KIPS PER SQUARE FOOT
psi	POUNDS PER SQUARE INCH
psf	POUNDS PER SQUARE FOOT
lb/ft^3, pcf	POUNDS PER CUBIC FOOT
tsf	TONS PER SQUARE FOOT
mph, MPH *	MILES PER HOUR
ø	NOMINAL DIAMETER
oz	OUNCE
lb	POUND
kip	1,000 POUNDS
cal	CALORIE
ft	FOOT OR FEET
gal	GALLON

* For use on a sign panel only

STATE OF CALIFORNIA
DEPARTMENT OF TRANSPORTATION

ABBREVIATIONS (SHEET 2 OF 2)

NO SCALE

RSP A10B DATED JULY 19, 2013 SUPERSEDES STANDARD PLAN A10B DATED MAY 20, 2011 - PAGE 2 OF THE STANDARD PLANS BOOK DATED 2010.

REVISED STANDARD PLAN RSP A10B

2010 REVISED STANDARD PLAN RSP A10B

6-7-13

Dist	COUNTY	ROUTE	POST MILES TOTAL PROJECT	SHEET No.	TOTAL SHEETS
03	Pla	89	T8.6/12.8	68	77

REGISTERED CIVIL ENGINEER

July 19, 2013
PLANS APPROVAL DATE

REGISTERED PROFESSIONAL ENGINEER Michael Janzen No. 44788 Exp. 03-31-14 CIVIL STATE OF CALIFORNIA

THE STATE OF CALIFORNIA OR ITS OFFICERS OR AGENTS SHALL NOT BE RESPONSIBLE FOR THE ACCURACY OR COMPLETENESS OF SCANNED COPIES OF THIS PLAN SHEET.

TO ACCOMPANY PLANS DATED 10-7-13

2010 REVISED STANDARD PLAN RSP A87A

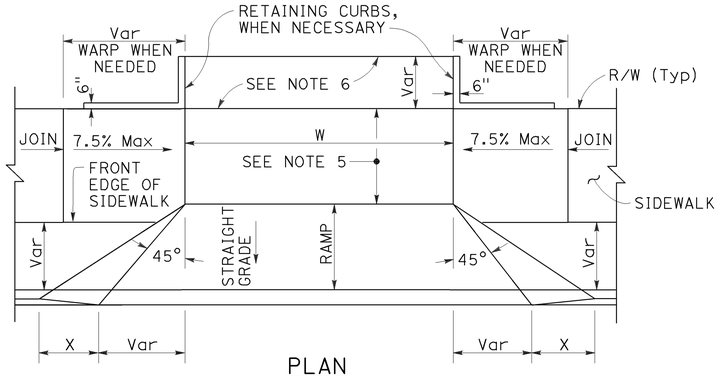

PLAN

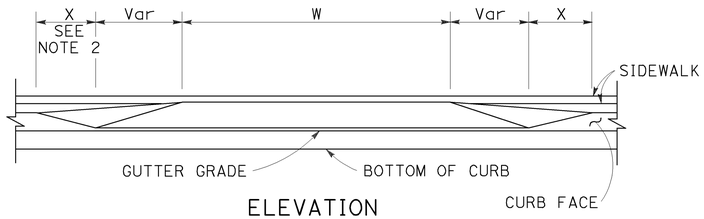

ELEVATION

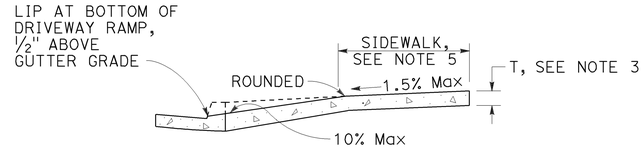

CASE A

Typical driveway, sidewalk not depressed

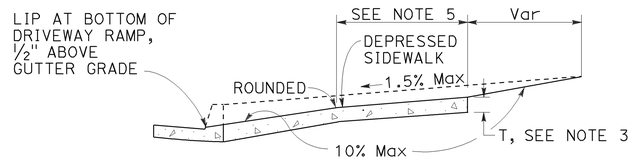

CASE B

Driveway with depressed sidewalk

SECTIONS

TABLE A

CURB TYPE	DIMENSIONS			
	"H1"	"H2"	"W1"	"W2"
A1-6	1'-2"	6"	7½"	1½"
A1-8	1'-4"	8"	8"	2"
A2-6	1'-0"	6"	2'-7½"	1½"
A2-8	1'-2"	8"	2'-8"	2"
A3-6	6"	5"	7¼"	1¼"
A3-8	8"	7"	7¾"	1¾"
B1-4	1'-0"	4"	7½"	2½"
B1-6	1'-2"	6"	9"	4"
B2-4	10"	4"	2'-7½"	2½"
B2-6	1'-0"	6"	2'-9"	4"
B3-4	4"	3"	7"	2"
B3-6	6"	5"	8½"	3½"
D-4	10"	4"	1'-6"	1'-1"
D-6	1'-0"	6"	2'-2"	1'-9"

CURB QUANTITIES

TYPE	CUBIC YARDS PER LINEAR FOOT
A1-6	0.02585
A1-8	0.03084
A2-6	0.05903
A2-8	0.06379
A3-6	0.01036
A3-8	0.01435
B1-4	0.02185
B1-6	0.02930
B2-4	0.05515
B2-6	0.06171
B3-4	0.00641
B3-6	0.01074
B4	0.05709
D-4	0.04083
D-6	0.06804
E	0.06661

DRIVEWAYS

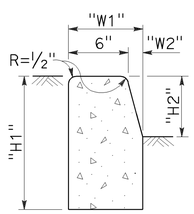

TYPE A1 CURBS

See Table A

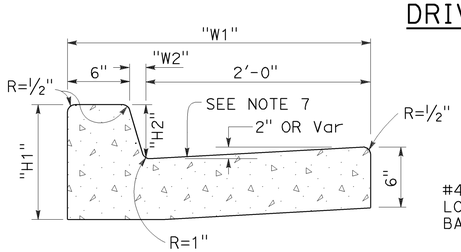

TYPE A2 CURBS

See Table A

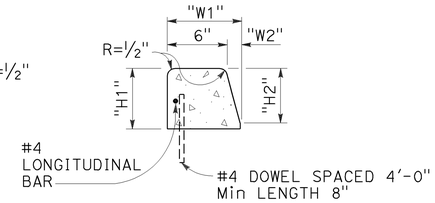

TYPE A3 CURBS

Superimposed on existing pavement
See Table A

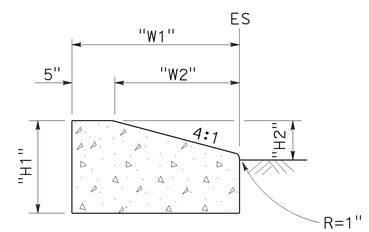

TYPE D CURBS

See Table A

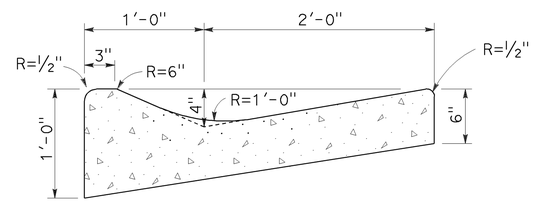

TYPE E CURB

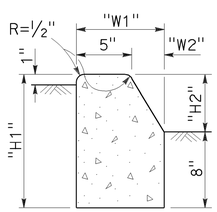

TYPE B1 CURBS

See Table A

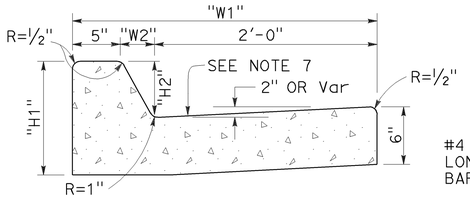

TYPE B2 CURBS

See Table A

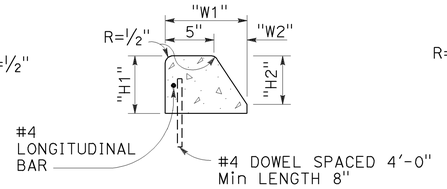

TYPE B3 CURBS

Superimposed on existing pavement
See Table A

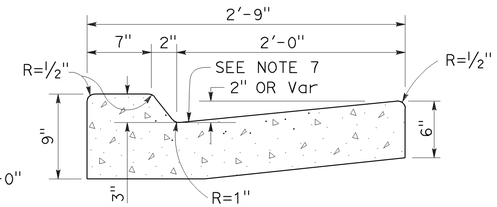

TYPE B4 CURBS

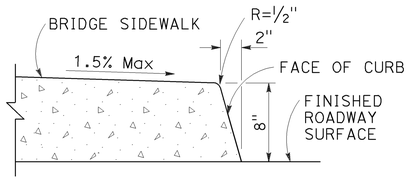

TYPE H CURB

On Bridges

CURBS

NOTES:

1. Case A driveway section typically applies.
2. X=3'-0" except for curb heights over 10" where 4:1 slopes shall be used on curb slope.
3. Sidewalk and ramp thickness "T" at driveway shall be 4" for residental and 6" for commercial.
4. Difference in slope of the driveway ramp and the slope of a line between the gutter and a point on the roadway 5'-0" from gutter line shall not exceed 15%. Reduce driveway ramp slope, not gutter slope, where required.
5. Minimum width of clear passageway for sidewalk shall be 4'-2".
6. Retaining curbs and acquisition of construction easement may be necessary for narrow sidewalks or curb heights in excess of 6".
7. Across the pedestrian route at curb ramp locations, the gutter pan slope shall not exceed 1" of depth for each 2'-0" of width.

STATE OF CALIFORNIA
DEPARTMENT OF TRANSPORTATION

CURBS AND DRIVEWAYS

NO SCALE

RSP A87A DATED JULY 19, 2013 SUPERSEDES STANDARD PLAN A87A
DATED MAY 20, 2011 - PAGE 119 OF THE STANDARD PLANS BOOK DATED 2010.

REVISED STANDARD PLAN RSP A87A

TO ACCOMPANY PLANS DATED 10-7-13

Dist	COUNTY	ROUTE	POST MILES TOTAL PROJECT	SHEET No.	TOTAL SHEETS
03	Pla	89	T8.6/12.8	69	77

REGISTERED CIVIL ENGINEER

October 19, 2012
PLANS APPROVAL DATE

REGISTERED PROFESSIONAL ENGINEER Glenn DeCou No. C34547 Exp. 9-30-13 CIVIL STATE OF CALIFORNIA

THE STATE OF CALIFORNIA OR ITS OFFICERS OR AGENTS SHALL NOT BE RESPONSIBLE FOR THE ACCURACY OR COMPLETENESS OF SCANNED COPIES OF THIS PLAN SHEET.

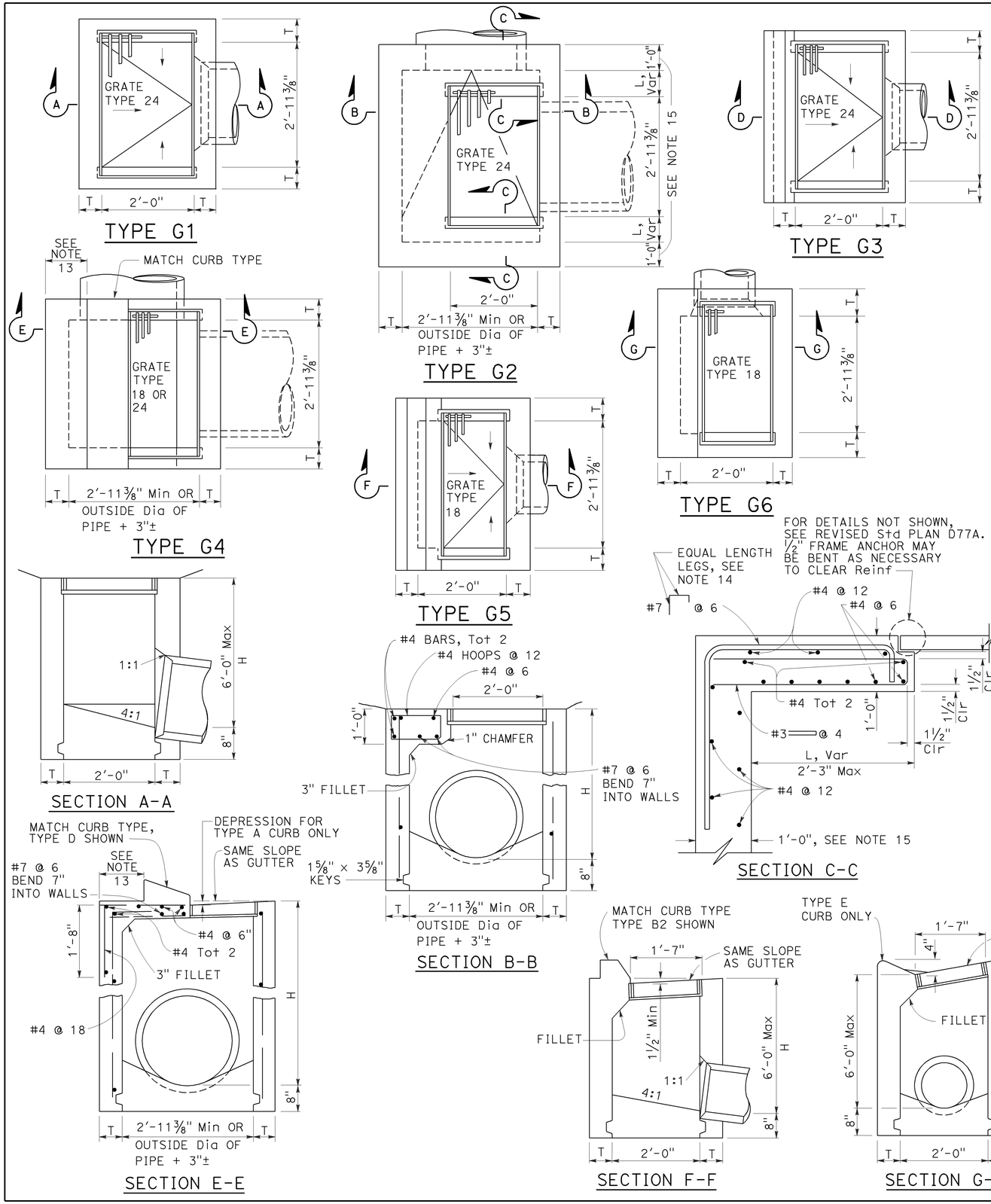

NOTES:

1. "H" is the difference in elevation between the outlet pipe flow line and the normal gutter grade line undepressed.
2. For "T" wall thickness, see Table A below.
3. Wall reinforcing not required when "H" is 8'-0" or less and the unsupported width or length is 7'-0" or less. Walls exceeding these limits shall be reinforced with #4 bars @ 1'-6" ± centers placed 1½" clear to inside of box unless otherwise shown.
4. Inlet bottom reinforcing not required. See Standard Plan D74C for alternative reinforced bottom and alternative half round bottom.
5. Steps-None required where "H" is less than 2'-6". Where "H" is 2'-6" or more, install steps with lowest rung 1'-0" above the floor and highest rung not more than 6" below top of inlet. The distance between steps shall not exceed 1'-0" and shall be uniform throughout the length of the wall. Place steps in the wall without an opening. Steps inserts may be substituted for the bar steps. Step inserts shall comply with State Industrial Safety requirements. See Standard Plan D74C for step details.
6. Details shown apply to both metal and concrete pipe.
7. Pipe(s) can be placed in any wall.
8. Curb section shall match adjacent curb.
9. Basin floors shall have wood trowel finish and a minimum slope of 12:3 from all directions toward outlet pipe.
10. Set inlet so that grate bars are parallel to direction of principal surface flow.
11. See Revised Standard Plans D77A and D77B for grate and frame details and weights of miscellaneous iron and steel.
12. See Standard Plan D78A for gutter depression details.
13. This dimenison will vary with different grates, curbs types, box width and wall thickness.
14. Bar may be rotated as necessary to clear opening. Where "L" is 6" or less, bar may be omitted.
15. Where "L" is 6" or less, wall thickness shall be as shown in Table A.
16. Cast-in-place inlets to be formed around all pipes/stubs intersecting the inlet, and concrete poured in one continuous operation. Precast inlets shall have mortared connections conforming to details for Type GCP Inlet shown on Standard Plan D75B. See Standard Specifications for mortar composition.

TABLE A

CONCRETE QUANTITIES				
TYPE	H=3'-0" TO 8'-0" (T=6")		H=8'-1" TO 20'-0" (T=8")	
	H=3'-0" (CY)	ADDITIONAL PCC PER FOOT (CY)	H=8'-1" (CY)	ADDITIONAL PCC PER FOOT (CY)
G-1	0.95	0.220	See Note A	SEE NOTE A
G-2*	1.31	0.255	3.50	0.357
G-3	1.03	0.220	See Note A	SEE NOTE A
G-4* (TYPE 24)	1.27	0.255	3.48	0.357
G-4* (TYPE 18)	1.30	0.255	3.50	0.357
G-5	1.02	0.220	SEE NOTE A	SEE NOTE A
G-6	1.04	0.220	SEE NOTE A	SEE NOTE A

TABLE BASED ON 8" FLOOR SLAB. NO DEDUCTIONS ARE TO BE MADE TO THESE QUANTITIES BECAUSE OF PIPE OPENINGS, DIFFERENT FLOOR ALTERNATIVES OR DIFFERENT CURB TYPES. * QUANTITIES FOR TYPE G-2 AND G-4 INLETS BASED ON THE MINIMUM INTERIOR DIMENSIONS.

NOTE A:

Maximum allowable height 6'-0".

STATE OF CALIFORNIA
DEPARTMENT OF TRANSPORTATION

DRAINAGE INLETS

NO SCALE

RSP D73 DATED OCTOBER 19, 2012 SUPERSEDES STANDARD PLAN D73 DATED MAY 20, 2011 - PAGE 156 OF THE STANDARD PLANS BOOK DATED 2010.

REVISED STANDARD PLAN RSP D73

2010 REVISED STANDARD PLAN RSP D73

7-19-12

Dist	COUNTY	ROUTE	POST MILES TOTAL PROJECT	SHEET No.	TOTAL SHEETS
03	Pla	89	T8.6/12.8	70	77

Raymond Don Tsztoo
REGISTERED CIVIL ENGINEER

April 19, 2013
PLANS APPROVAL DATE

Raymond Don Tsztoo No. C37332 Exp. 6-30-14 CIVIL — REGISTERED PROFESSIONAL ENGINEER — STATE OF CALIFORNIA

THE STATE OF CALIFORNIA OR ITS OFFICERS OR AGENTS SHALL NOT BE RESPONSIBLE FOR THE ACCURACY OR COMPLETENESS OF SCANNED COPIES OF THIS PLAN SHEET.

TO ACCOMPANY PLANS DATED 10-7-13

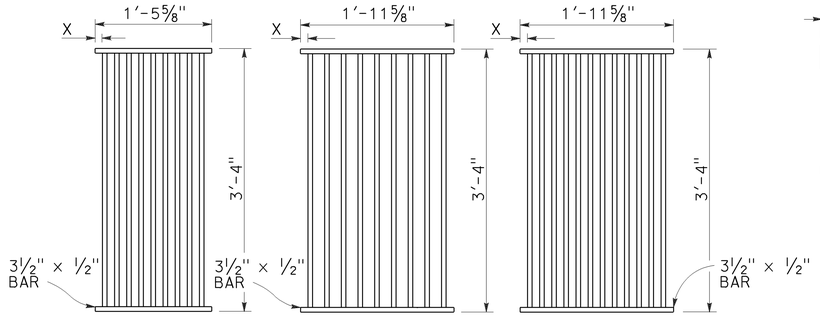

TYPE 18-9

1⅜" Clear spacing. Use within the roadbed on highways where bicycles and pedestrians are excluded.

TYPE 24-9

2" Clear spacing. Use in locations off the roadbed on all types of highways.

TYPE 24-12

1⅜" Clear spacing. Use within the roadbed on highways where bicycles and pedestrians are excluded.

RECTANGULAR GRATE DETAILS

(See table below)

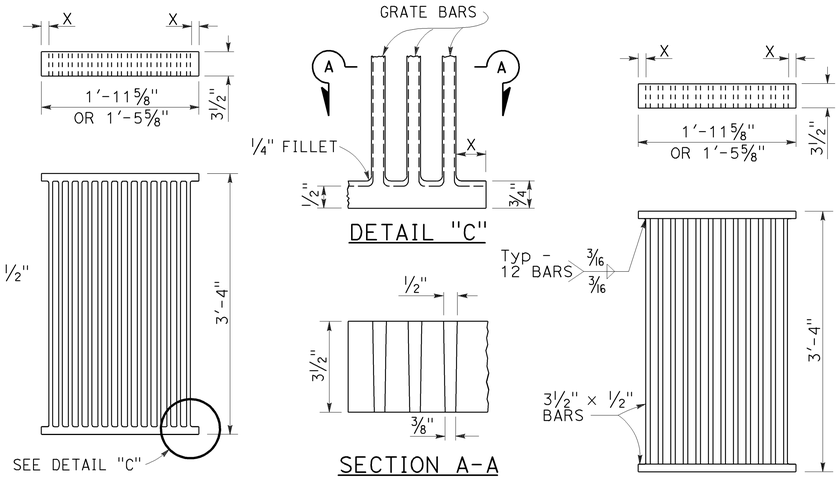

ALTERNATIVE CAST DUCTILE IRON GRATE OR CAST CARBON STEEL GRATE

ALTERNATIVE WELDED GRATE

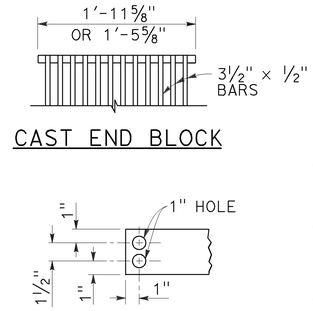

CAST END BLOCK

END OF BAR

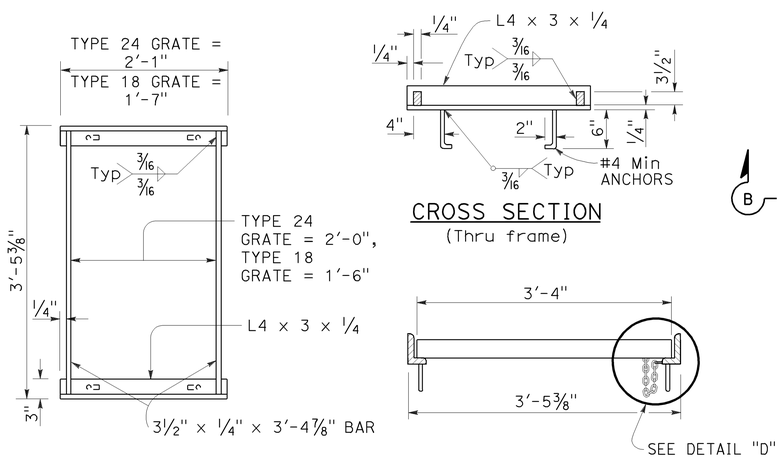

TYPICAL FRAME

CROSS SECTION

(Thru frame)

LONGITUDINAL SECTION

(Thru frame and grate)

RECTANGULAR FRAME DETAILS

(For all rectangular grates)

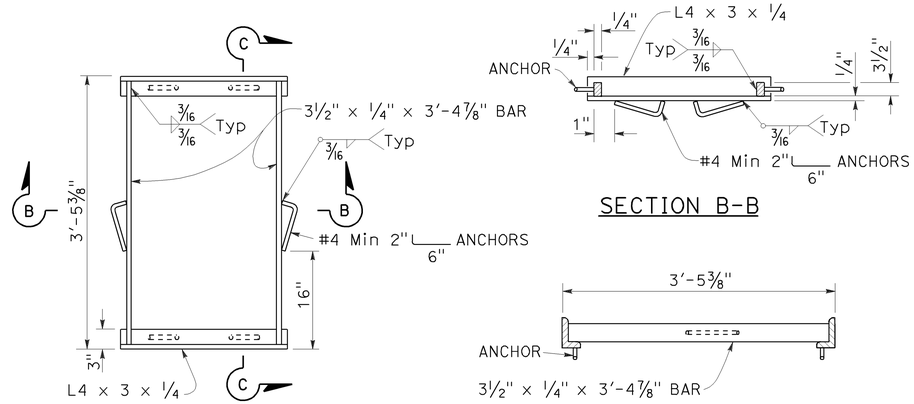

TYPICAL FRAME

SECTION B-B

SECTION C-C

ALTERNATIVE ANCHOR FOR RECTANGULAR FRAME

(For details not shown, See Rectangular Frame Details)

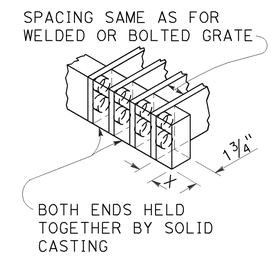

ALTERNATIVE CAST DUCTILE IRON OR CAST CARBON STEEL END BLOCK GRATE

NOTES:

1. Grate type numbers refer to approximate width of grate in inches and number of bars, respectively.
2. Contractor has the option of using cast ductile iron, cast carbon steel, welded, bolted, or cast end block grate.
3. Rounded top of bars optional on all grates.
4. Pipe inlets with a grate shall be placed so that bars parallel direction of principle surface flow.
5. Complete joint penetration butt welds may be substituted for the fillet welds on all anchors.
6. Standard square, hexagon, round or equivalent headed anchors may be substituted for the right angle hooks on the anchors shown on this plan.
7. Grate and frame weights are based on welded grates (weights of face angles, steps, protection bars, etc. are not included).
8. Connect chain to grate and frame only at locations shown on the plans. When chain is required, do not use cast ductile iron grates.

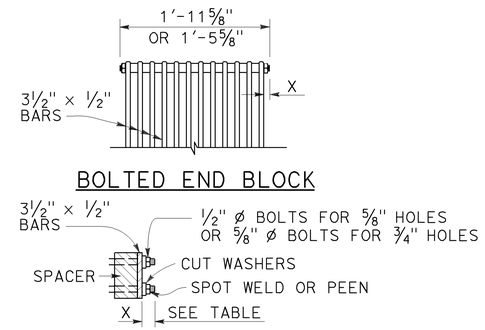

BOLTED END BLOCK

BOLTING DETAIL

ALTERNATIVE BOLTED GRATE

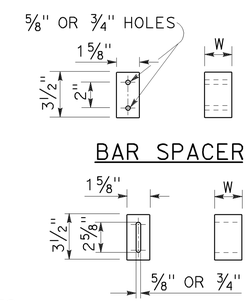

BAR SPACER

ALTERNATIVE SPACER

W = 1⅜" or 2"

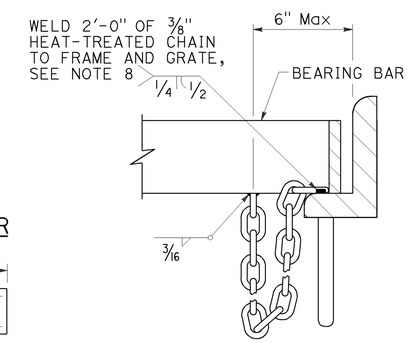

DETAIL "D"

(Steel grates only)

GRATE BAR SPACING TABLE

TYPE	No. OF BARS	CLEAR BAR SPACING	X
18-9	9	1⅜"	1 1/16"
24-9	9	2"	1 9/16"
24-12	12	1⅜"	1¼"

INLET TYPE	COVER TYPE	WEIGHT LB
OS	PLATE	174
OL-7	PLATE	170
OL-10	PLATE	170
OL-14	PLATE	170
OL-21	PLATE	170
OCP	PLATE	112
OCPI	PLATE	112
OCPI	REDWOOD	42
OMP	PLATE	177
OMPI	PLATE	177

INLET TYPE	GRATE TYPE	No. OF GRATES	WEIGHT LB
GDO	24-12	2	634
GOL-7	24-12	1	326
GOL-10	24-12	1	326
GO,G1,G2,G3,G4 (TYPE 24)	24-9	1	263
	24-12	1	326
G4 (TYPE 18),G5,G6	18-9	1	249
GT1	18-9	2	498
GT2	18-9	2	498
GT3	24-12	2	652
GT4	24-12	2	652
TRASH RACK			22
GRATE CHAIN			3

BASIS FOR Misc IRON & STEEL FINAL PAY WEIGHTS FOR DRAINAGE INLETS

(See Note 7)

STATE OF CALIFORNIA
DEPARTMENT OF TRANSPORTATION

GRATE DETAILS No. 1

NO SCALE

RSP D77A DATED APRIL 19, 2013 SUPERSEDES RSP D77A DATED JULY 20, 2012 AND STANDARD PLAN D77A DATED MAY 20, 2011 - PAGE 164 OF THE STANDARD PLANS BOOK DATED 2010.

REVISED STANDARD PLAN RSP D77A

2010 REVISED STANDARD PLAN RSP D77A

4-4-13

Dist	COUNTY	ROUTE	POST MILES TOTAL PROJECT	SHEET No.	TOTAL SHEETS
03	Pla	89	T8.6/12.8	71	77

Raymond Don Tsztoo
REGISTERED CIVIL ENGINEER

April 19, 2013
PLANS APPROVAL DATE

REGISTERED PROFESSIONAL ENGINEER Raymond Don Tsztoo No. C37332 Exp. 6-30-14 CIVIL STATE OF CALIFORNIA

THE STATE OF CALIFORNIA OR ITS OFFICERS OR AGENTS SHALL NOT BE RESPONSIBLE FOR THE ACCURACY OR COMPLETENESS OF SCANNED COPIES OF THIS PLAN SHEET.

TO ACCOMPANY PLANS DATED 10-7-13

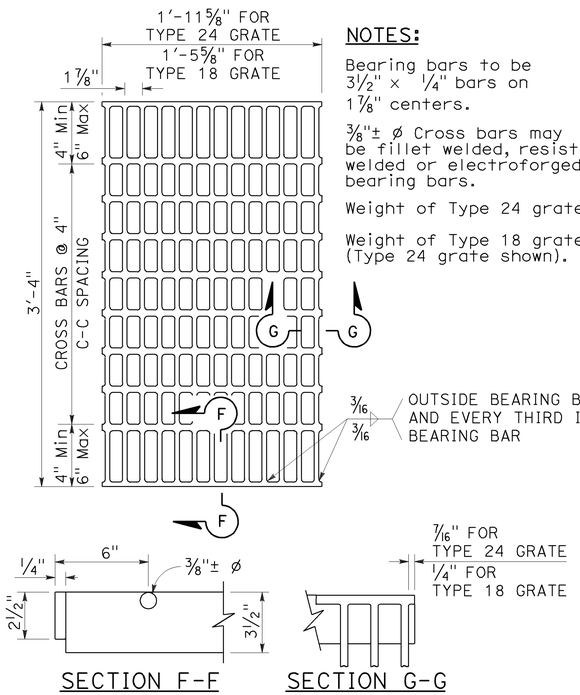

NOTES:

Bearing bars to be 3½" × ¼" bars on 1⅞" centers.

⅜"± ø Cross bars may be fillet welded, resistance welded or electroforged to bearing bars.

Weight of Type 24 grate = 141 LBS.

Weight of Type 18 grate = 107 LBS. (Type 24 grate shown).

SECTION F-F SECTION G-G

TYPE 18-10 AND 24-13 GRATE

(Welded Steel)

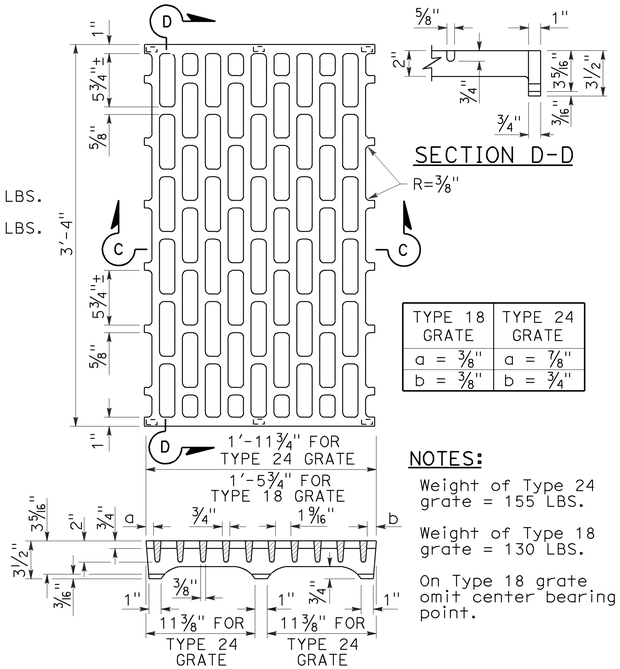

TYPE 18 GRATE	TYPE 24 GRATE
a = ⅜"	a = ⅞"
b = ⅜"	b = ¾"

NOTES:

Weight of Type 24 grate = 155 LBS.

Weight of Type 18 grate = 130 LBS.

On Type 18 grate omit center bearing point.

SECTION C-C

TYPE 18-8C AND 24-10C GRATE

(Cast ductile iron)

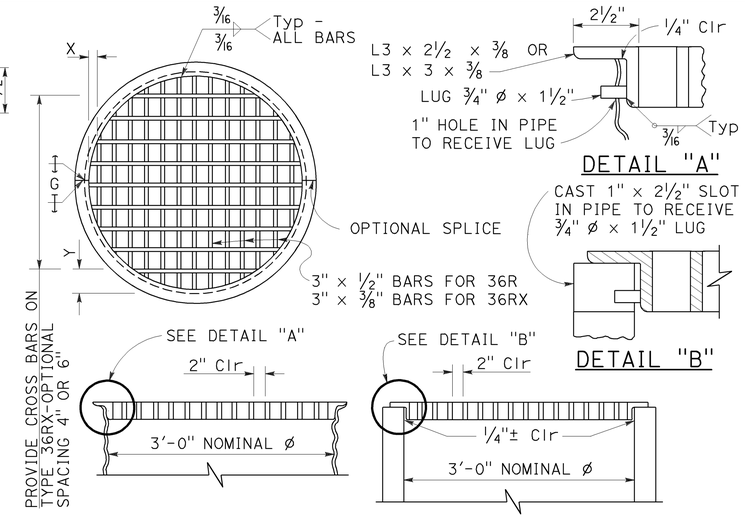

TYPE 36R AND 36RX GRATE DETAILS

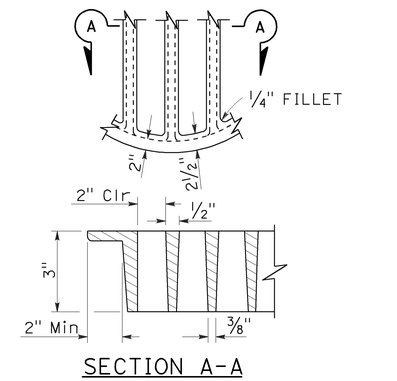

SECTION A-A

ALTERNATIVE CAST DUCTILE IRON GRATE OR CAST CARBON STEEL GRATE TYPE 36R AND 36RX

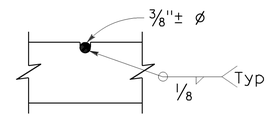

⅜"± ø Cross bars may be fillet welded, resistance welded or electroforged to bearing bars.

CROSS BAR DETAIL TYPE 36RX GRATE (WELDED STEEL)

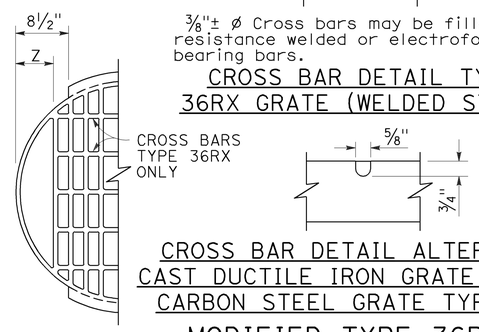

CROSS BAR DETAIL ALTERNATIVE CAST DUCTILE IRON GRATE OR CAST CARBON STEEL GRATE TYPE 36RX

MODIFIED TYPE 36R AND 36RX GRATE FOR ODI INLET

BASIS FOR Misc IRON AND STEEL FINAL PAY WEIGHTS FOR DRAINAGE INLETS

INLET TYPE	GRATE TYPE	No. OF GRATES	WEIGHT LB
GDO (SEE NOTE 4)	24-10C	2	391
	24-10S	2	456
	24-12X	2	473
	24-13	2	374
GO,GOL,G1,G2, G3,G4 (TYPE 24)	24-10C	1	202
	24-10S	1	229
	24-12X	1	239
	24-13	1	188
G4 (TYPE 18) G5,G6	18-8S	1	187
	18-9X	1	187
	18-10	1	149
GT1,GT2	18-8S	2	374
	18-9X	2	374
	18-10	2	298
GT3,GT4	24-10C	2	404
	24-10S	2	458
	24-12X	2	478
	24-13	2	376
ODI	36RX (Mod)	1	196
GMP,GCP,GCPI	36RX	1	215
ODI	36R (Mod)	1	220
GMP,GCP,GCPI	36R	1	236
TRASH RACK			22
GRATE CHAIN			3

NOTES:

1. When alternative grates are allowed - Final pay based on alternative with the lesser weight.
2. Use frame shown on Standard Plan D74A, D74B or RSP D77A as appropriate.
3. When Type 24-10S, 24-12X or 24-13 grates are used with GDO Inlets, a ¼" × 3½" × 3'-4⅞" steel bar shall be welded across the center of inlet frame to separate the individual grates.
4. See Revised Standard Plan RSP D77A for connecting chain to welded grate and frame. When chain is required, do not use cast ductile iron grate.

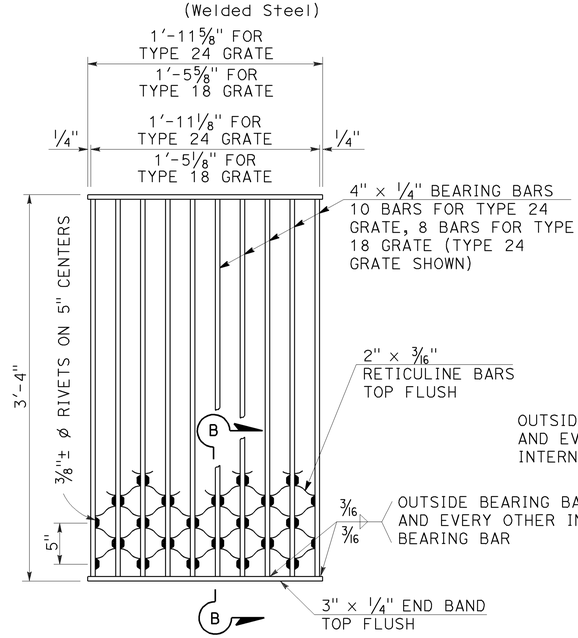

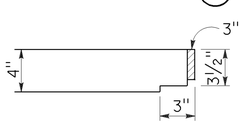

NOTES:

Weight of Type 24 grate = 182 LBS.
Weight of Type 18 grate = 145 LBS.

SECTION B-B

TYPE 18-8S AND 24-10S GRATE

(Welded Steel) Reticuline type

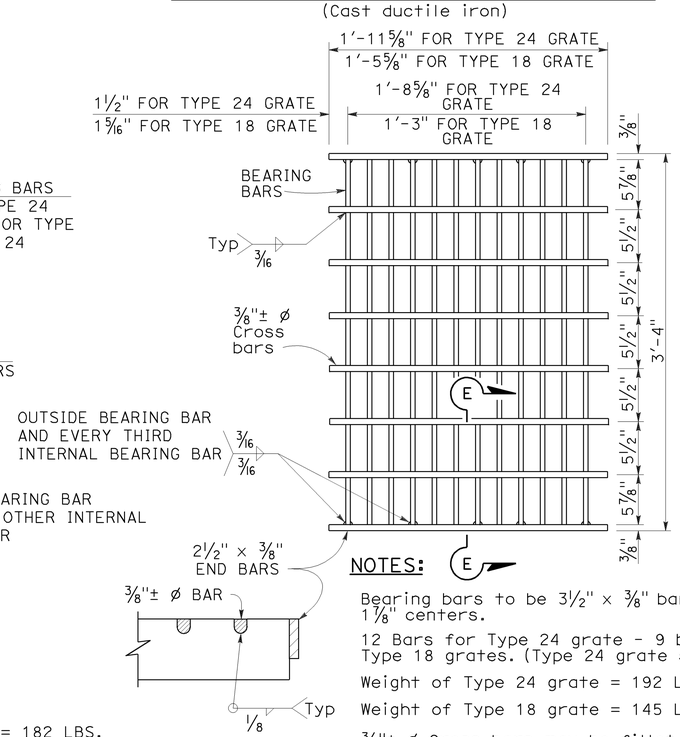

NOTES:

Bearing bars to be 3½" × ⅜" bars on 1⅞" centers.

12 Bars for Type 24 grate - 9 bars for Type 18 grates. (Type 24 grate shown).

Weight of Type 24 grate = 192 LBS.

Weight of Type 18 grate = 145 LBS.

⅜"± ø Cross bars may be fillet welded, resistance welded or electroforged to bearing bars.

SECTION E-E

TYPE 18-9X AND 24-12X GRATE

(Welded Steel)

GRATE BAR SPACING TABLE

TYPE	No. OF BARS	CLEAR BAR SPACING	X	Y 4" SPACING	Y 6" SPACING	Z
36R	13	2"	2⅛"	-	-	-
36RX (STEEL)	15	2"	9/16"	3¾"	5¾"	-
36RX (CAST)	13	2"	2⅛"	3¾"	5¾"	-
36R Mod	12	2"	2⅛"	-	-	5"
36RX Mod (STEEL)	13	2"	9/16"	3¾"	5¾"	5 11/16"
36RX Mod (CAST)	12	2"	2⅛"	3¾"	5¾"	5"

STATE OF CALIFORNIA
DEPARTMENT OF TRANSPORTATION

GRATE DETAILS No. 2

NO SCALE

RSP D77B DATED APRIL 19, 2013 SUPERSEDES RSP D77B DATED JULY 20, 2012 AND STANDARD PLAN D77B DATED MAY 20, 2011 - PAGE 165 OF THE STANDARD PLANS BOOK DATED 2010.

REVISED STANDARD PLAN RSP D77B

2010 REVISED STANDARD PLAN RSP D77B

4-4-13

Dist	COUNTY	ROUTE	POST MILES TOTAL PROJECT	SHEET No.	TOTAL SHEETS
03	Pla	89	T8.6/12.8	72	77

REGISTERED CIVIL ENGINEER

April 19, 2013
PLANS APPROVAL DATE

REGISTERED PROFESSIONAL ENGINEER
Gurinderpal Bhullar
No. C48815
Exp. 9-30-14
CIVIL
STATE OF CALIFORNIA

THE STATE OF CALIFORNIA OR ITS OFFICERS OR AGENTS SHALL NOT BE RESPONSIBLE FOR THE ACCURACY OR COMPLETENESS OF SCANNED COPIES OF THIS PLAN SHEET.

TO ACCOMPANY PLANS DATED 10-7-13

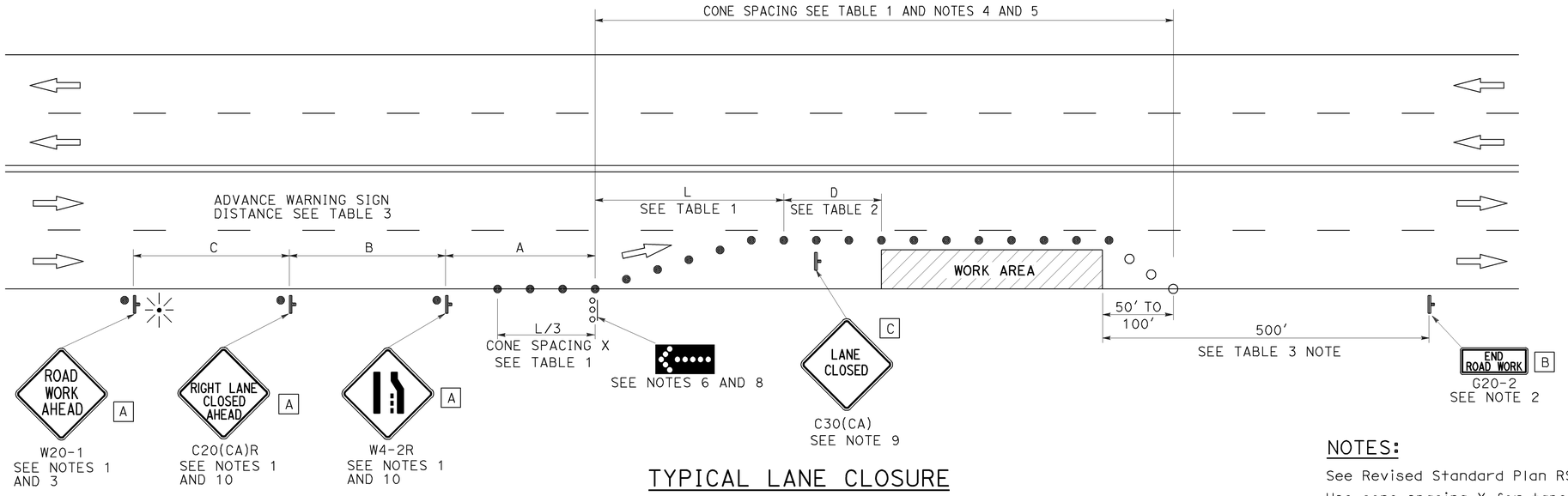

TYPICAL LANE CLOSURE

NOTES:

See Revised Standard Plan RSP T9 for tables.

Use cone spacing X for taper segment, Y for tangent segment or Z for conflict situations, as approriate, per Table 1, unless X, Y, or Z cone spacing is shown on this sheet.

Unless otherwise specified in the special provisions, all temporary warning signs shall have black legend on fluorescent orange background.

California codes are designated by (CA). Otherwise, Federal (MUTCD) codes are shown.

NOTES:

1. Each advance warning sign shall be equipped with at least two flags for daytime closure. Each flag shall be at least 16" x 16" in size and shall be orange or fluorescent red-orange in color. Flashing beacons shall be placed at the locations indicated for lane closure during hours of darkness.
2. A G20-2 "END ROAD WORK" sign, as appropriate, shall be placed at the end of the lane closure unless the end of work area is obvious, or ends within a larger project's limits.
3. If the W20-1 sign would follow within 2000' of a stationary W20-1 or G20-1 "ROAD WORK NEXT _____ MILES", use a C20(CA) sign for the first advance warning sign.
4. All cones used for lane closures during the hours of darkness shall be fitted with retroreflective bands (or sleeves) as specified in the specifications.
5. Portable delineators, placed at one-half the spacing indicated for traffic cones, may be used instead of cones for daytime closures only.
6. Flashing arrow sign shall be either Type I or Type II.
7. For approach speeds over 50 mph, use the "Traffic Control System for Lane Closure On Freeways And Expressways" plan for lane closure details and requirements.
8. A minimum 1500' of sight distance shall be provided where possible for vehicles approaching the first flashing arrow sign. Lane closures shall not begin at the top of crest vertical curve or on a horizontal curve.
9. Place a C30(CA) sign every 2000' throughout length of lane closure.
10. Median lane closures shall conform to the details as shown except that C20(CA)L and W4-2L signs shall be used.
11. At least one person shall be assigned to provide full time maintenance of traffic control devices for lane closure unless, otherwise directed by the Engineer.

LEGEND

- TRAFFIC CONE
- TRAFFIC CONE (OPTIONAL TAPER)
- TEMPORARY TRAFFIC CONTROL SIGN
- FLASHING ARROW SIGN (FAS)
- FAS SUPPORT OR TRAILER
- PORTABLE FLASHING BEACON

SIGN PANEL SIZE (Min)

A	48" x 48"
B	36" x 18"
C	30" x 30"

STATE OF CALIFORNIA
DEPARTMENT OF TRANSPORTATION

TRAFFIC CONTROL SYSTEM FOR LANE CLOSURE ON MULTILANE CONVENTIONAL HIGHWAYS

NO SCALE

RSP T11 DATED APRIL 19, 2013 SUPERSEDES STANDARD PLAN T11 DATED MAY 20, 2011 - PAGE 239 OF THE STANDARD PLANS BOOK DATED 2010.

REVISED STANDARD PLAN RSP T11

2010 REVISED STANDARD PLAN RSP T11

4-2-13

Dist	COUNTY	ROUTE	POST MILES TOTAL PROJECT	SHEET No.	TOTAL SHEETS
03	Pla	89	T8.6/12.8	73	77

REGISTERED CIVIL ENGINEER

April 19, 2013
PLANS APPROVAL DATE

REGISTERED PROFESSIONAL ENGINEER Gurinderpal Bhullar No. C48815 Exp. 9-30-14 CIVIL STATE OF CALIFORNIA

THE STATE OF CALIFORNIA OR ITS OFFICERS OR AGENTS SHALL NOT BE RESPONSIBLE FOR THE ACCURACY OR COMPLETENESS OF SCANNED COPIES OF THIS PLAN SHEET.

TO ACCOMPANY PLANS DATED 10-7-13

LEGEND

- TRAFFIC CONE
- TEMPORARY TRAFFIC CONTROL SIGN
- FLASHING ARROW SIGN (FAS)
- FAS SUPPORT OR TRAILER
- PORTABLE FLASHING BEACON

SIGN PANEL SIZE (Min)

A	48" × 48"
B	24" × 24"
C	36" × 18"

NOTES:

See Revised Standard Plan RSP T9 for tables.

Use cone spacing X for taper segment, Y for tangent segment or Z for conflict situations, as approriate, per Table 1, unless X, Y, or Z cone spacing is shown on this sheet.

Unless otherwise specified in the special provisions, all temporary warning signs shall have black legend on fluorescent orange background.

California codes are designated by (CA). Otherwise, Federal (MUTCD) codes are shown.

TYPICAL HALF ROAD CLOSURE

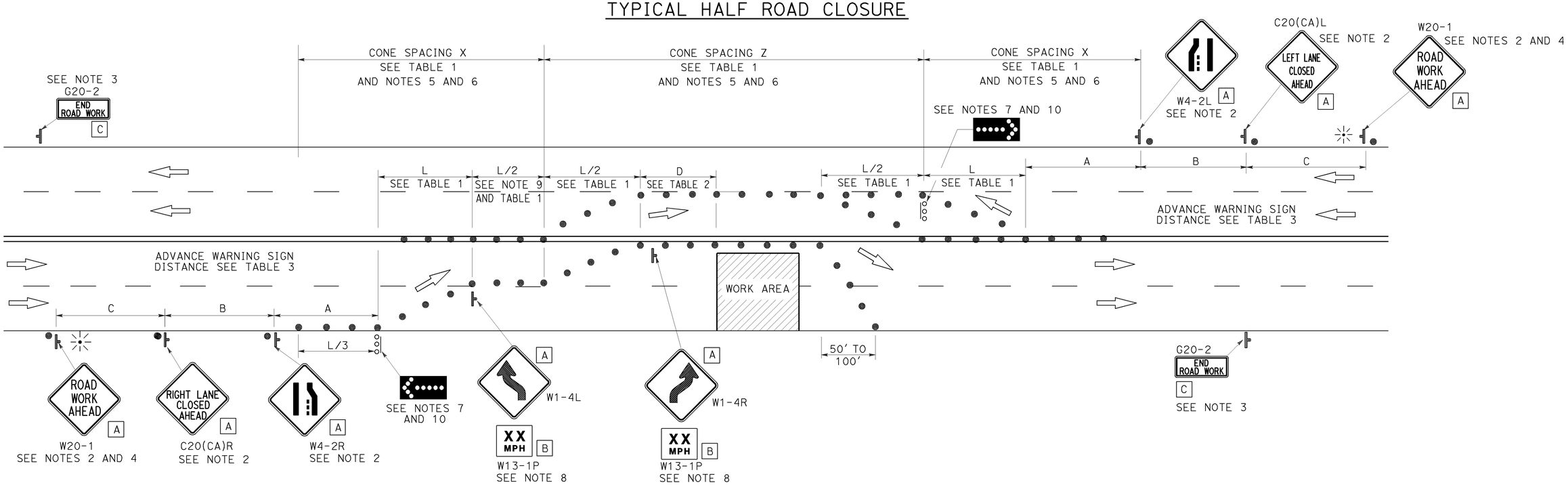

NOTES:

1. At least one person shall be assigned to provide full time maintenance of traffic control devices for lane closure unless, otherwise directed by the Engineer.
2. Each advance warning sign in each direction of travel shall be equipped with at least two flags for daytime closure. Each flag shall be at least 16" x 16" in size and shall be orange or fluorescent red-orange in color. Flashing beacons shall be placed at the locations indicated for lane closure during hours of darkness.
3. A G20-2 "END ROAD WORK" sign, as appropriate, shall be placed at the end of the lane closure unless the end of work area is obvious, or ends within a larger project's limits.
4. If the W20-1 sign would follow within 2000' of a stationary W20-1 or G20-1 "ROAD WORK NEXT _____ MILES", use a C20(CA) sign for the first advance warning sign.
5. All cones used for lane closures during the hours of darkness shall be fitted with retroreflective bands (or sleeves) as specified in the specifications.
6. Portable delineators, placed at one-half the spacing indicated for traffic cones, may be used instead of cones for daytime closures only.
7. Flashing arrow signs shall be either Type I or Type II.
8. Advisory speed will be determined by the Engineer. The W13-1P Plaque will not be required when advisory speed is more than the posted or maximum speed limit.
9. Unless otherwise specified in the special provisions, the tangent (L/2) shall be used.
10. A minimum 1500' of sight distance shall be provided where possible for vehicles approaching the first flashing arrow sign. Lane closures shall not begin at the top of crest vertical curve or on a horizontal curve.

STATE OF CALIFORNIA
DEPARTMENT OF TRANSPORTATION

TRAFFIC CONTROL SYSTEM FOR HALF ROAD CLOSURE ON MULTILANE CONVENTIONAL HIGHWAYS AND EXPRESSWAYS

NO SCALE

RSP T12 DATED APRIL 19, 2013 SUPERSEDES STANDARD PLAN T12
DATED MAY 20, 2011 - PAGE 240 OF THE STANDARD PLANS BOOK DATED 2010.

REVISED STANDARD PLAN RSP T12

2010 REVISED STANDARD PLAN RSP T12

4-2-13

Dist	COUNTY	ROUTE	POST MILES TOTAL PROJECT	SHEET No.	TOTAL SHEETS
03	Pla	89	T8.6/12.8	74	77

REGISTERED CIVIL ENGINEER

April 19, 2013
PLANS APPROVAL DATE

REGISTERED PROFESSIONAL ENGINEER Gurinderpal Bhullar No. C48815 Exp. 9-30-14 CIVIL STATE OF CALIFORNIA

THE STATE OF CALIFORNIA OR ITS OFFICERS OR AGENTS SHALL NOT BE RESPONSIBLE FOR THE ACCURACY OR COMPLETENESS OF SCANNED COPIES OF THIS PLAN SHEET.

TO ACCOMPANY PLANS DATED 10-7-13

2010 REVISED STANDARD PLAN RSP T13

NOTES:

See Revised Standard Plan RSP T9 for tables.

Use cone spacing X for taper segment, Y for tangent segment or Z for conflict situations, as approriate, per Table 1, unless X, Y, or Z cone spacing is shown on this sheet.

Unless otherwise specified in the special provisions, all temporary warning signs shall have black legend on fluorescent orange background.

California codes are designated by (CA). Otherwise, Federal (MUTCD) codes are shown.

TYPICAL LANE CLOSURE WITH REVERSIBLE CONTROL

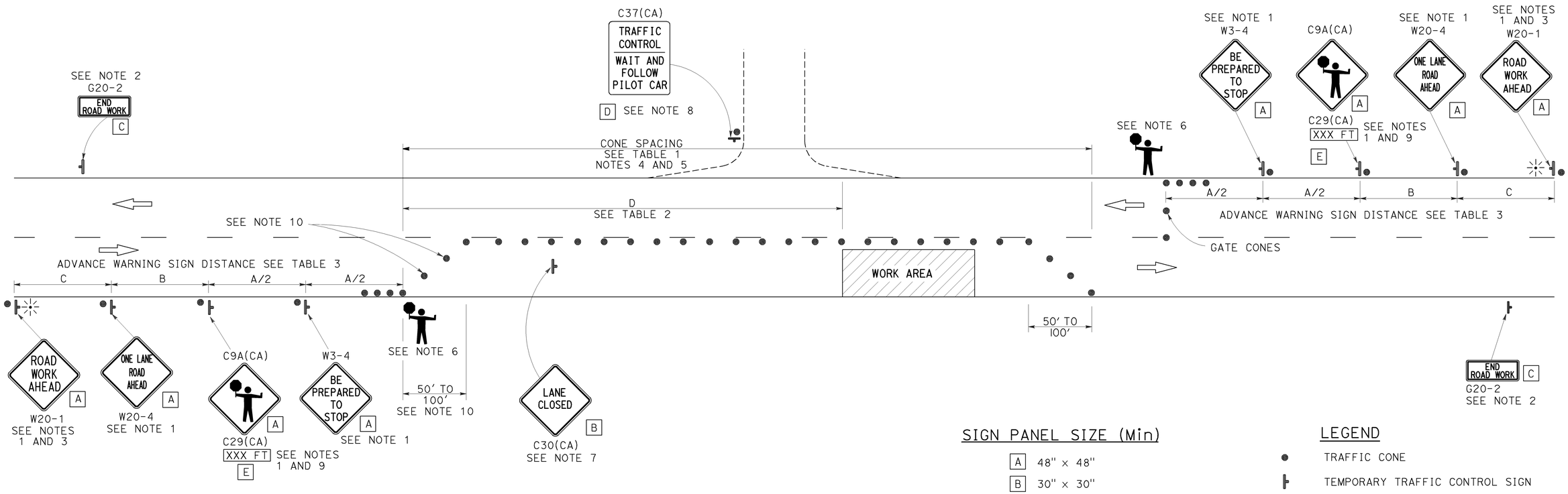

SIGN PANEL SIZE (Min)

A	48" × 48"
B	30" × 30"
C	36" × 18"
D	36" × 42"
E	20" × 7"

LEGEND

- TRAFFIC CONE
- TEMPORARY TRAFFIC CONTROL SIGN
- PORTABLE FLASHING BEACON
- FLAGGER

NOTES:

1. Each advance warning sign in each direction of travel shall be equipped with at least two flags for daytime closure. Each flag shall be at least 16" x 16" in size and shall be orange or fluorescent red-orange in color. Flashing beacons shall be placed at the locations indicated for lane closure during hours of darkness.
2. A G20-2 "END ROAD WORK" sign, as appropriate, shall be placed at the end of the lane control unless the end of work area is obvious, or ends within a larger project's limits.
3. If the W20-1 sign would follow within 2000' of a stationary W20-1 or G20-1 "ROAD WORK NEXT _____ MILES", use a W20-4 sign for the first advance warning sign.
4. All cones used for lane closures during the hours of darkness shall be fitted with retroreflective bands (or sleeves) as specified in the specifications.
5. Portable delineators, placed at one-half the spacing indicated for traffic cones, may be used instead of cones for daytime closures only.
6. Additional advance flaggers may be required. Flagger should stand in a conspicuous place, be visible to approaching traffic as well as approaching vehicles after the first vehicle has stopped. During the hours of darkness, the flagging-station and flagger shall be illuminated and clearly visible to approaching traffic. The illumination footprint of the lighting on the ground shall be at least 20' in diameter. Place a minimum of four cones at 50' intervals in advance of flagger station as shown.
7. Place C30(CA) "LANE CLOSED" sign at 500' to 1000' intervals throughout extended work areas. They are optional if the work area is visible from the flagger station.
8. When a pilot car is used, place a C37(CA) "TRAFFIC CONTROL-WAIT AND FOLLOW PILOT CAR" sign with black legend on white background at all intersections, driveways and alleys without a flagger within traffic control area. Signs shall be clean and visible at all times. Where traffic can not be effectively self-regulated, at least one flagger shall be used at each intersection within traffic control area.
9. An optional C29(CA) sign may be placed below the C9A(CA) sign.
10. Either traffic cones or barricades shall be placed on the taper. Barricades shall be Type I, II, or III.

STATE OF CALIFORNIA
DEPARTMENT OF TRANSPORTATION

TRAFFIC CONTROL SYSTEM FOR LANE CLOSURE ON TWO LANE CONVENTIONAL HIGHWAYS

NO SCALE

RSP T13 DATED APRIL 19, 2013 SUPERSEDES STANDARD PLAN T13 DATED MAY 20, 2011 - PAGE 241 OF THE STANDARD PLANS BOOK DATED 2010.

REVISED STANDARD PLAN RSP T13

Dist	COUNTY	ROUTE	POST MILES TOTAL PROJECT	SHEET No.	TOTAL SHEETS
03	Pla	89	T8.6/12.8	75	77

REGISTERED CIVIL ENGINEER

April 19, 2013
PLANS APPROVAL DATE

REGISTERED PROFESSIONAL ENGINEER
Gurinderpal Bhullar
No. C48815
Exp. 9-30-14
CIVIL
STATE OF CALIFORNIA

THE STATE OF CALIFORNIA OR ITS OFFICERS OR AGENTS SHALL NOT BE RESPONSIBLE FOR THE ACCURACY OR COMPLETENESS OF SCANNED COPIES OF THIS PLAN SHEET.

TO ACCOMPANY PLANS DATED 10-7-13

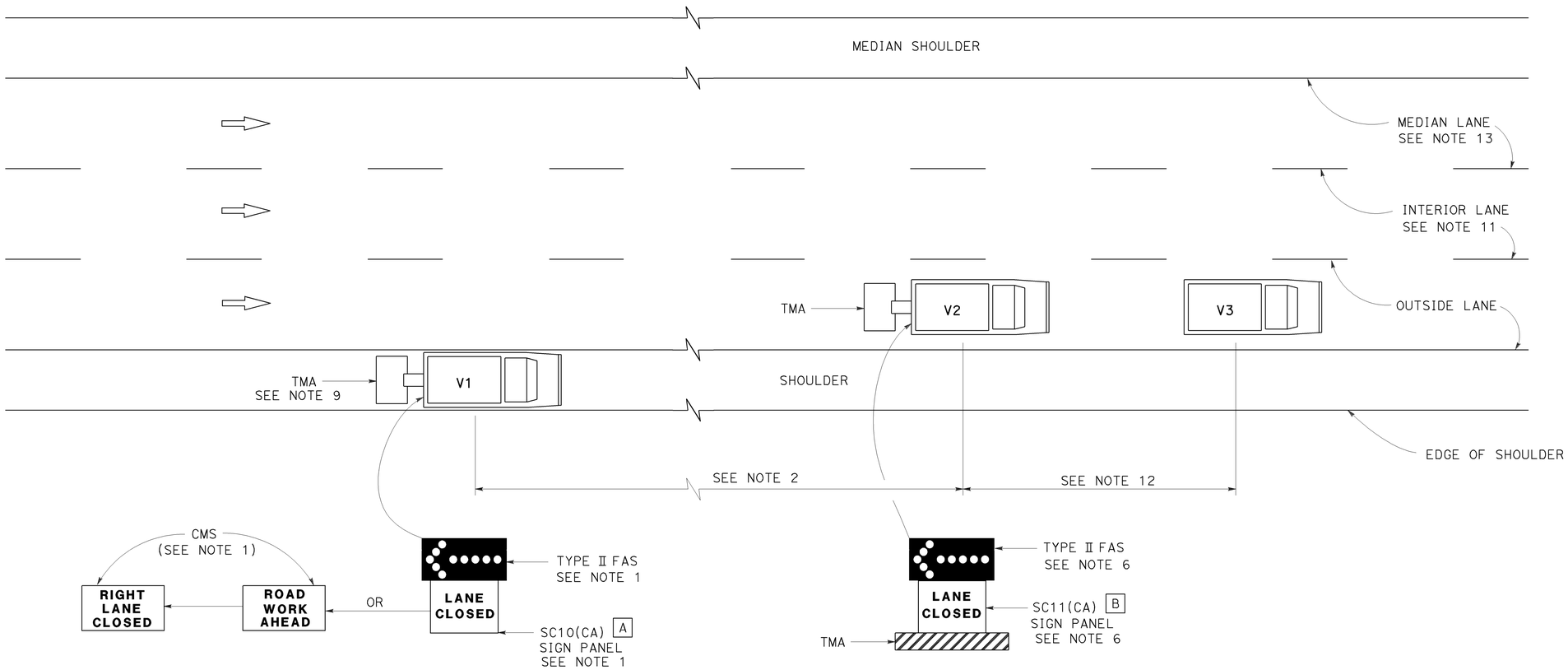

MOVING LANE CLOSURE ON MEDIAN LANE OR OUTSIDE LANE OF MULTILANE HIGHWAYS

SIGN PANEL SIZE (Min)

A 66" x 36"

B 54" x 42"

LEGEND

V1	SIGN VEHICLE
V2	SHADOW VEHICLE
V3	WORK/APPLICATION VEHICLE
	FLASHING ARROW SIGN (FAS)
CMS	CHANGEABLE MESSAGE SIGN
TMA	TRUCK-MOUNTED ATTENUATOR

NOTES:

1. Either a changeable message sign or a SC10(CA) sign panel and a Type II flashing arrow sign shall be mounted on the rear of sign vehicle V1. The changeable message sign shall be sequenced to show the "ROAD WORK AHEAD" message first, followed by the "RIGHT LANE CLOSED" message. For median lane closure, the flashing arrow symbol shall be reversed with the arrowhead on the right and the changeable message sign shall show "LEFT LANE CLOSED".
2. If traffic queues develop, sign vehicle V1 should be positioned upstream from the end of queue. Sign vehicle V1 shall be positioned where highly visible when shoulders are not available.
3. A minimum sight distance of 1500′ should be provided in advance of sign vehicle V1.
4. Sign vehicle V1 should remain at the beginning of horizontal or vertical curves until the other vehicles (V2 and V3) are far enough beyond the curve to resume the minimum sight distance of 1500′.
5. Vehicle-mounted sign panels shall have Type III or above retroreflective sheeting, black on white, or black on fluorescent orange, with 6" minimum series D letters per Caltrans sign specifications.
6. Shadow vehicle V2 shall be equipped with a truck-mounted attenuator. The sign panel shown and a Type II flashing arrow sign shall be mounted on the rear of shadow vehicle V2. For median lane closure the flashing arrow sign symbol shall be displayed with the arrowhead on the right.
7. All vehicles used for lane closures shall be equipped with two-way radios, and the vehicle operators shall maintain communication during the work or application operation.
8. All vehicles shall be equipped with flashing or rotating amber lights.
9. If sign vehicle V1 encroaches into the traffic lane due to insufficient shoulder width, sign vehicle V1 shall be equipped with a truck-mounted attenuator. Sign vehicle V1 shall stay as close to the edge of shoulder as practicable.
10. Where workers would be on foot in the work area, a stationary type lane closure (Revised Standard Plan T10, T11, etc., as applicable) shall be used instead of this plan.
11. For moving lane closure on interior lane of multilane highways, use Revised Standard Plan T16.
12. The spacing between work vehicle(s) and the shadow vehicles, and between each shadow vehicle should be minimized to deter road users from driving in between.
13. When the work/application vehicle V3 occupies the median lane, sign vehicle V1 should drive in the median shoulder and indicate left lane closed ahead.

STATE OF CALIFORNIA
DEPARTMENT OF TRANSPORTATION

TRAFFIC CONTROL SYSTEM FOR MOVING LANE CLOSURE ON MULTILANE HIGHWAYS

NO SCALE

RSP T15 DATED APRIL 19, 2013 SUPERSEDES STANDARD PLAN T15
DATED MAY 20, 2011 - PAGE 243 OF THE STANDARD PLANS BOOK DATED 2010.

REVISED STANDARD PLAN RSP T15

2010 REVISED STANDARD PLAN RSP T15

12-18-12

Dist	COUNTY	ROUTE	POST MILES TOTAL PROJECT	SHEET No.	TOTAL SHEETS
03	Pla	89	T8.6/12.8	76	77

REGISTERED CIVIL ENGINEER

April 19, 2013
PLANS APPROVAL DATE

REGISTERED PROFESSIONAL ENGINEER Gurinderpal Bhullar No. C48815 Exp. 9-30-14 CIVIL STATE OF CALIFORNIA

THE STATE OF CALIFORNIA OR ITS OFFICERS OR AGENTS SHALL NOT BE RESPONSIBLE FOR THE ACCURACY OR COMPLETENESS OF SCANNED COPIES OF THIS PLAN SHEET.

TO ACCOMPANY PLANS DATED 10-7-13

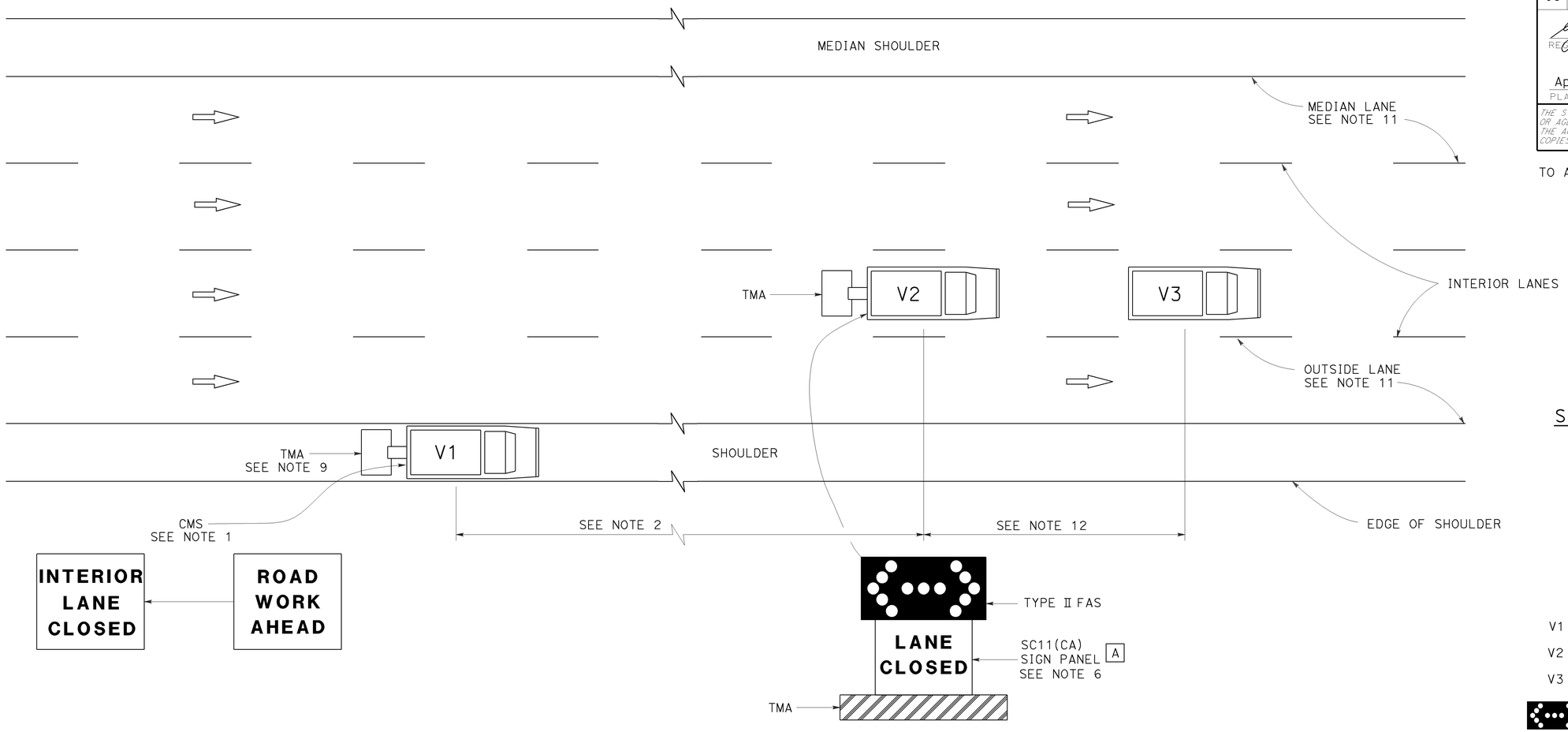

MOVING LANE CLOSURE ON INTERIOR LANE OF MULTILANE HIGHWAYS

SIGN PANEL SIZE (Min)

A 54" x 42"

LEGEND

V1	SIGN VEHICLE
V2	SHADOW VEHICLE
V3	WORK/APPLICATION VEHICLE
	FLASHING ARROW SIGN (FAS) IN FLASHING DOUBLE ARROW MODE
CMS	CHANGEABLE MESSAGE SIGN
TMA	TRUCK-MOUNTED ATTENUATOR

NOTES:

1. A changeable message sign shall be mounted on the rear of sign vehicle V1. The changeable message sign shall be sequenced to show the "ROAD WORK AHEAD" message first, followed by the "INTERIOR LANE CLOSED" message. The message "CENTER LANE CLOSED" may be used in place of the "INTERIOR LANE CLOSED" message.
2. If traffic queues develop, sign vehicle V1 should be positioned upstream from the end of queue. Sign vehicle V1 shall be positioned where highly visible when shoulders are not available.
3. A minimum sight distance of 1500′ should be provided in advance of sign vehicle V1.
4. Sign vehicle V1 should remain at the beginning of horizontal or vertical curves until the other vehicles (V2 and V3) are far enough beyond the curve to resume the minimum sight distance of 1500′.
5. Vehicle-mounted sign panels shall have Type III or above retroreflective sheeting, black on white, or black on fluorescent orange, with 6" minimum series D letters per Caltrans sign specifications.
6. Shadow vehicle V2 shall be equipped with a truck-mounted attenuator. The sign panel shown and a Type II flashing arrow sign shall be mounted on the rear of shadow vehicle V2.
7. All vehicles used for lane closures shall be equipped with two-way radios, and the vehicle operators shall maintain communication during the work or application operation.
8. All vehicles shall be equipped with flashing or rotating amber lights.
9. If sign vehicle V1 encroaches into the traffic lane due to insufficient shoulder width, sign vehicle V1 shall be equipped with a truck-mounted attenuator. Sign vehicle V1 shall stay as close to the edge of shoulder as practicable.
10. Where workers would be on foot in the work area, a stationary type lane closure (Revised Standard Plan T10, T11 etc., as applicable) shall be used instead of this plan.
11. For moving lane closure on median lane or outside lane of multilane highways, use Revised Standard Plan T15.
12. The spacing between work vehicle(s) and the shadow vehicles, and between each shadow vehicle should be minimized to deter road users from driving in between.

STATE OF CALIFORNIA
DEPARTMENT OF TRANSPORTATION

TRAFFIC CONTROL SYSTEM FOR MOVING LANE CLOSURE ON MULTILANE HIGHWAYS

NO SCALE

RSP T16 DATED APRIL 19, 2013 SUPERSEDES STANDARD PLAN T16
DATED MAY 20, 2011 - PAGE 244 OF THE STANDARD PLANS BOOK DATED 2010.

REVISED STANDARD PLAN RSP T16

2010 REVISED STANDARD PLAN RSP T16

12-18-12

Dist	COUNTY	ROUTE	POST MILES TOTAL PROJECT	SHEET No.	TOTAL SHEETS
03	Pla	89	T8.6/12.8	77	77

REGISTERED CIVIL ENGINEER

April 19, 2013
PLANS APPROVAL DATE

REGISTERED PROFESSIONAL ENGINEER Gurinderpal Bhullar No. C48815 Exp. 9-30-14 CIVIL STATE OF CALIFORNIA

THE STATE OF CALIFORNIA OR ITS OFFICERS OR AGENTS SHALL NOT BE RESPONSIBLE FOR THE ACCURACY OR COMPLETENESS OF SCANNED COPIES OF THIS PLAN SHEET.

TO ACCOMPANY PLANS DATED 10-7-13

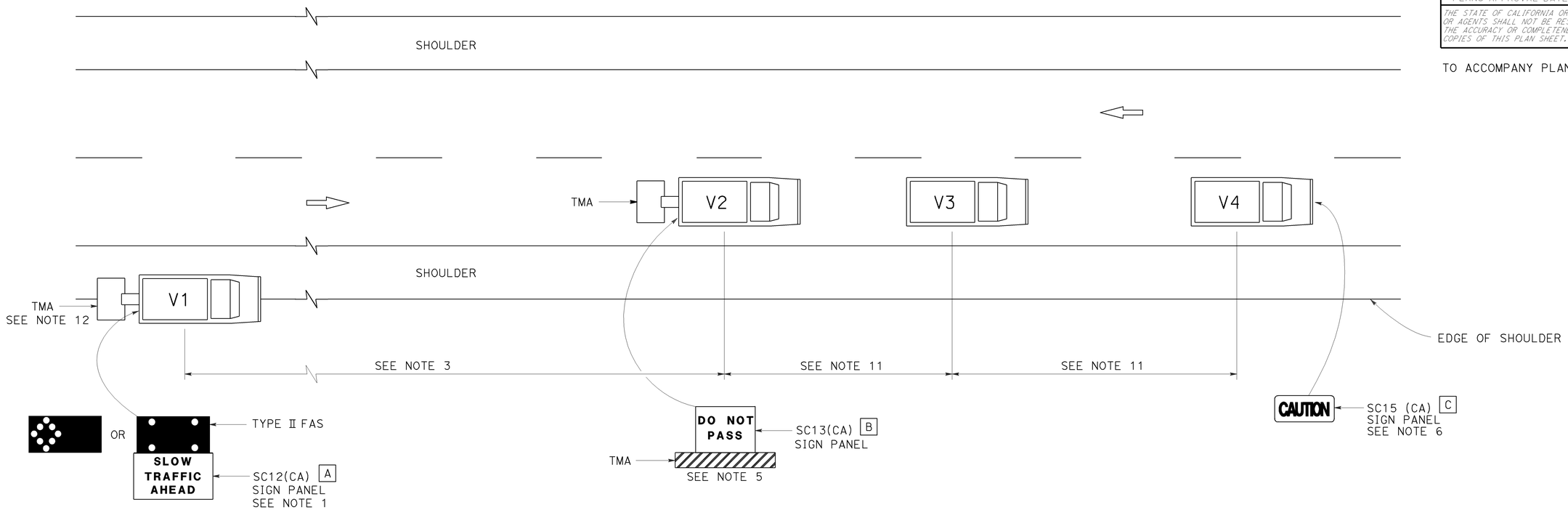

LEGEND

V1	SIGN VEHICLE
V2	SHADOW VEHICLE
V3	WORK/APPLICATION VEHICLE
V4	SIGN VEHICLE
TMA	TRUCK-MOUNTED ATTENUATOR
	FLASHING ARROW SIGN (FAS) IN FLASHING CAUTION MODE
	FLASHING ARROW SIGN (FAS) IN ALTERNATING DIAMOND CAUTION

SIGN PANEL SIZE (Min)

A	72" x 42"
B	54" x 42"
C	54" x 24"

NOTES:

1. Either a changeable message sign or a SC12(CA) "SLOW TRAFFIC AHEAD" sign shall be mounted on the rear of sign vehicle V1. The changeable message sign shall be sequenced to show the "CAUTION" message first, follow by the "SLOW TRAFFIC AHEAD" message. A Type II flashing arrow sign may be used with the SC12(CA) sign panel.
2. Sign vehicle V1 should be positioned where highly visible when shoulders are not available.
3. If traffic queues develop, sign vehicle V1 should be positioned upstream from the end of queue.
4. Vehicle-mounted sign panels shall have Type III or above retroreflective sheeting, black on white, or black on fluorescent orange, with 6" minimum series D letters per Caltrans sign specifications.
5. Shadow vehicle shall be equipped with a truck-mounted attenuator. The sign panel shown shall be mounted on the rear of shadow vehicle V2. The message "LANE CLOSED" may be used in place of the "DO NOT PASS" message.
6. The sign panel shown shall be mounted on the front of sign vehicle V4, facing opposing traffic.
7. All vehicles shall be equipped with flashing or rotating amber lights.
8. Sign vehicle V4 will not be required when the work and vehicles V2 and V3 are 2′ or more from the centerline of the highway during the work or application operations.
9. All vehicles used for lane closures shall be equipped with two-way radios and the vehicle operators shall maintain communication during the work or application operation.
10. This plan shall not be used where workers would be on foot in the work area. Use a stationary type lane closure (Revised Standard Plan T13) for this condition.
11. Minimize spacing between vehicles V2 and V3 and vehicles V3 and V4 to deter road users from driving in between them.
12. If sign vehicle V1 encroaches into the traffic lane due to insufficient shoulder width, sign vehicle V1 shall be equipped with a truck-mounted attenuator. Sign vehicle V1 shall stay as close to the edge of shoulder as practicable.

STATE OF CALIFORNIA
DEPARTMENT OF TRANSPORTATION

TRAFFIC CONTROL SYSTEM FOR MOVING LANE CLOSURE ON TWO LANE HIGHWAYS

NO SCALE

RSP T17 DATED APRIL 19, 2013 SUPERSEDES STANDARD PLAN T17
DATED MAY 20, 2011 - PAGE 245 OF THE STANDARD PLANS BOOK DATED 2010.

REVISED STANDARD PLAN RSP T17

2010 REVISED STANDARD PLAN RSP T17

12-18-12