STATE OF CALIFORNIA • DEPARTMENT OF TRANSPORTATION

CALTRANS BIDDER - DBE - COMMITMENT

DES-OE-0102.10C (NEW 06/2012)

Low Bidder

09/09/14 P01:46 RCVD

This information may be submitted with your bid proposal. If it is not, and you are the apparent low bidder or the second or third low bidder, it must be submitted and received as specified in section 2 of the specifications. Failure to submit the required DBE information will be grounds for finding the bid nonresponsive.

CONTRACT NO:
06-0M8204

BID AMOUNT:
$ 924,203.10

BID OPENING DATE:
SEPTEMBER 3, 2014

BIDDER'S NAME:
EMMETT'S EXCAVATION, INC.

DBE GOAL FROM CONTRACT, %:
14%

DBE PRIME CONTRACTOR CERTIFICATION[1]:

BID ITEM NO.	ITEM OF WORK AND DESCRIPTION OF SERVICES TO BE SUBCONTRACTED OR MATERIALS TO BE PROVIDED[2]	FOR CALTRANS USE ONLY	NAME OF DBEs (Must be certified on the date bids are opened - include Caltrans certification #, DBE address and phone number) (Indicate 2nd and lower tier subcontractors)	DOLLAR AMOUNT DBE[3]
#28	SAWCUT AC		AUSTIN ENTERPRISE #013602 P. O. BOX 81926 BAKERSFIELD, CA 93380 (661) 589-1001	$6,532.50
#43, #44	PLACE AC DIKE, PLACE MISC. ASPHALT		A. C. DIKE CO. #000219 2788 VENTURE DR. LINCOLN, CA 95648 (916) 652-0159	$5,063.50
#14, #15, #37 #38, #39, #40	EROSION CONTROL - HYDROMULCH, STRAW, HYDROSEED		NITTA EROSION CONTROL #217 3778 DEL MAR AVE. LOOMIS, CA 95650-9051 (916) 652-7459	$10,819.20

IMPORTANT: Identify all DBE firms being claimed for credit, regardless of tier. Names of the First Tier DBE Subcontractors and their respective items(s) of work listed above must be consistent, where applicable, with the names and items of work in the "Subcontractor List " submitted with your bid. Copies of the DBE quotes are required.

CONTINUED ON NEXT PAGE.....

Total Claimed Participation: $ ____ %

1. DBE prime contractors must enter their certification number and indicate all work to be performed by DBEs including work performed by its own forces.
2. If 100% of item is not to be performed or furnished by DBE, describe exact portion of item to be performed or furnished.
3. See section 2-1.12 of the specifications to determine the credit allowed for DBE firms.

CONTINUED ON NEXT PAGE.....

Signature of Bidder

09/03/2014 Date

(559) 347-9188 (Area Code) Tel. No.

LUCRETIA EMMETT, V. P., SEC., TREAS.
Person to Contact (Please Type or Print)

Submit to:

MSC 43
OFFICE ENGINEER
DEPARTMENT OF TRANSPORTATION
1727 30TH STREET
SACRAMENTO, CA 95816-7005

ADA Notice For individuals with sensory disabilities, this document is available in alternate formats. For information call (916) 654-6410 or TDD (916) 654-3880 or write Records and Forms Management, 1120 N Street, MS-89, Sacramento, CA 95814.

STATE OF CALIFORNIA • DEPARTMENT OF TRANSPORTATION

CALTRANS BIDDER - DBE - COMMITMENT

DES-OE-0102.10C (NEW 06/2012)

This information may be submitted with your bid proposal. If it is not, and you are the apparent low bidder or the second or third low bidder, it must be submitted and received as specified in section 2 of the specifications. Failure to submit the required DBE information will be grounds for finding the bid nonresponsive.

CONTRACT NO:
06-0M8204

BID AMOUNT:
$ 924,203.10

BID OPENING DATE:
SEPTEMBER 3, 2014

BIDDER'S NAME:
EMMETT'S EXCAVATION, INC.

DBE GOAL FROM CONTRACT, %:
14%

DBE PRIME CONTRACTOR CERTIFICATION[1]:

BID ITEM NO.	ITEM OF WORK AND DESCRIPTION OF SERVICES TO BE SUBCONTRACTED OR MATERIALS TO BE PROVIDED[2]	FOR CALTRANS USE ONLY	NAME OF DBEs (Must be certified on the date bids are opened - include Caltrans certification #, DBE address and phone number) (Indicate 2nd and lower tier subcontractors)	DOLLAR AMOUNT DBE[3]
#17, #18, #26, #63	MBGR & CRASH CUSHIONS		PC&N CONSTRUCTION, INC. 5301 BYRON HOT SPRINGS ROAD BYRON, CA 94514 DBE #39218 (925) 634-4567	$111,507.00
#1, #5, #19, #66 #72	TRAFFIC STRIPING & LEAD PLAN		SUPER SEAL & STRIPE 310 A STREET P. O. BOX 755 DBE #2003 FILLMORE, CA 93016 (805) 524-7345	$10,290.00
#13	WATER POLLUTION CONTROL PLAN		TULLY CONSULTING GROUP 180 S. FIRST ST., SUITE 9 DIXON, CA 95620 (707) 693-1926 DBE #38300	$650.00
			CONTINUED ON NEXT PAGE.....	
			Total Claimed Participation	$ %

IMPORTANT: Identify all DBE firms being claimed for credit, regardless of tier. Names of the First Tier DBE Subcontractors and their respective items(s) of work listed above must be consistent, where applicable, with the names and items of work in the "Subcontractor List" submitted with your bid. Copies of the DBE quotes are required.

1. DBE prime contractors must enter their certification number and indicate all work to be performed by DBEs including work performed by its own forces.
2. If 100% of item is not to be performed or furnished by DBE, describe exact portion of item to be performed or furnished.
3. See section 2-1.12 of the specifications to determine the credit allowed for DBE firms.

CONTINUED ON NEXT PAGE.....

Signature of Bidder

09/03/2014 Date

(559) 347-9188 (Area Code) Tel. No.

LUCRETIA EMMETT, V. P., SEC., TREAS.
Person to Contact (Please Type or Print)

Submit to:

MSC 43
OFFICE ENGINEER
DEPARTMENT OF TRANSPORTATION
1727 30TH STREET
SACRAMENTO, CA 95816-7005

ADA Notice For individuals with sensory disabilities, this document is available in alternate formats. For information call (916) 654-6410 or TDD (916) 654-3880 or write Records and Forms Management, 1120 N Street, MS-89, Sacramento, CA 95814.

STATE OF CALIFORNIA • DEPARTMENT OF TRANSPORTATION

CALTRANS BIDDER - DBE - COMMITMENT

DES-OE-0102.10C (NEW 06/2012)

This information may be submitted with your bid proposal. If it is not, and you are the apparent low bidder or the second or third low bidder, it must be submitted and received as specified in section 2 of the specifications. Failure to submit the required DBE information will be grounds for finding the bid nonresponsive.

CONTRACT NO:
06-0M8204

BID AMOUNT:
$ 924,203.10

BID OPENING DATE:
SEPTEMBER 3, 2014

BIDDER'S NAME:
EMMETT'S EXCAVATION, INC.

DBE GOAL FROM CONTRACT, %:
14%

DBE PRIME CONTRACTOR CERTIFICATION[1]:

BID ITEM NO.	ITEM OF WORK AND DESCRIPTION OF SERVICES TO BE SUBCONTRACTED OR MATERIALS TO BE PROVIDED[2]	FOR CALTRANS USE ONLY	NAME OF DBEs (Must be certified on the date bids are opened - include Caltrans certification #, DBE address and phone number) (Indicate 2nd and lower tier subcontractors)	DOLLAR AMOUNT DBE[3]
#27, #29, #41, #42, #56	**HAULING MATERIAL**		**CLAY MIRANDA TRUCKING, INC. 3220 WEST BELMONT AVE. FRESNO, CA 93722 (559) 275-6250 #5568**	**$5,382.00**

IMPORTANT: Identify all DBE firms being claimed for credit, regardless of tier. Names of the First Tier DBE Subcontractors and their respective items(s) of work listed above must be consistent, where applicable, with the names and items of work in the "Subcontractor List " submitted with your bid. Copies of the DBE quotes are required.

Total Claimed Participation **$ 150,244.20**

16.26 %

1. DBE prime contractors must enter their certification number and indicate all work to be performed by DBEs including work performed by its own forces.
2. If 100% of item is not to be performed or furnished by DBE, describe exact portion of item to be performed or furnished.
3. See section 2-1.12 of the specifications to determine the credit allowed for DBE firms.

Signature of Bidder
LUCRETIA EMMETT, V. P., SEC., TREAS.

09/03/2014 Date

(559) 347-9188 (Area Code) Tel. No.

LUCRETIA EMMETT, V. P., SEC., TREAS.
Person to Contact (Please Type or Print)

Submit to:

MSC 43
OFFICE ENGINEER
DEPARTMENT OF TRANSPORTATION
1727 30TH STREET
SACRAMENTO, CA 95816-7005

ADA Notice For individuals with sensory disabilities, this document is available in alternate formats. For information call (916) 654-6410 or TDD (916) 654-3880 or write Records and Forms Management, 1120 N Street, MS-89, Sacramento, CA 95814.

Low Bidder

STATE OF CALIFORNIA • DEPARTMENT OF TRANSPORTATION

GOOD FAITH EFFORTS DOCUMENTATION - DBE

DES-OE-0102 11A (NEW 06/2012)

CONTRACT AMOUNT: **$924,203.10**

1. List items of work the Bidder made available to DBE firms. Identify those items of work the Bidder might otherwise perform with its own forces and those items that have been broken down into economically feasible units to facilitate DBE participation. For each item listed, show the dollar value and percentage of the total contract. The Bidder must demonstrate that sufficient work to meet the goal was made available to DBE firms.

Item of Work Offered	Bidder will Perform Item (Y/N)	Item Broken Down to Facilitate Participation (Y/N)	Amount ($)	Percentage of Contract
1. LEAD COMPLIANCE PLAN	☐ Yes ☑ No	☑ Yes ☐ No	$950.00	0.1%
2. CONSTRUCTION AREA SIGNS	☐ Yes ☑ No	☑ Yes ☐ No	$7,500.00	0.8%
3. TRAFFIC CONTROL SYSTEM	☑ Yes ☐ No	☑ Yes ☐ No	$25,000.00	2.7%
4. TYPE III BARRICADE	☐ Yes ☑ No	☑ Yes ☐ No	$1,680.00	0.2%
5. TEMPORARY TRAFFIC STRIPE (PAINT)	☐ Yes ☑ No	☑ Yes ☐ No	$180.00	0.02%
6. CHANNELIZER (SURAFCE MOUNTED)	☐ Yes ☑ No	☑ Yes ☐ No	$1,914.00	0.2%
7. PORTABLE CHANGEABLE MESSAGE SIGN	☐ Yes ☑ No	☑ Yes ☐ No	$27,500.00	3.0%
8. TEMPORARY RAILING (TYPE K)	☐ Yes ☑ No	☑ Yes ☐ No	$35,700.00	3.9%
9. TEMPORARY CRASH CUSHION MODULE	☐ Yes ☑ No	☑ Yes ☐ No	$2,200.00	0.2%
12. JOB SITE MANAGEMENT	☑ Yes ☐ No	☑ Yes ☐ No	$1,500.00	0.2%
13. PREPARE WATER POLLUTION CONTROL PROGRAM	☐ Yes ☑ No	☑ Yes ☐ No	$800.00	0.1%
14. TEMPORARY DRAINAGE INLET PROTECTION	☐ Yes ☑ No	☑ Yes ☐ No	$400.00	0.04%
15. TEMPORARY SILT FENCE	☐ Yes ☑ No	☑ Yes ☐ No	$5,405.00	0.6%
17. TREATED WOOD WASTE	☐ Yes ☑ No	☑ Yes ☐ No	$1,872.00	0.2%
18. REMOVE GUARDRAIL	☐ Yes ☑ No	☑ Yes ☐ No	$25,530.00	2.76%
19. REMOVE THERMOPLASTIC PAVEMENT MARKING	☐ Yes ☑ No	☑ Yes ☐ No	$420.00	0.04%
20. REMOVE ROADSIDE SIGN (STRAP AND SADDLE BRACKET METHOD)	☐ Yes ☑ No	☑ Yes ☐ No	$174.00	0.01%
21. REMOVE ROADSIDE SIGN PANEL	☐ Yes ☑ No	☑ Yes ☐ No	$580.00	0.1%
22. REMOVE ASPHALT CONCRETE DIKE	☐ Yes ☑ No	☑ Yes ☐ No	$7,003.00	0.8%
23. REMOVE INLET	☐ Yes ☑ No	☑ Yes ☐ No	$1,200.00	0.1%

GRAND TOTAL POTENTIAL UDBE PERCENTAGE: CONTINUED ON NEXT PAGE.....

GRAND TOTAL POTENTIAL UDBE AMOUNT: CONTINUED ON NEXT PAGE.....

STATE OF CALIFORNIA • DEPARTMENT OF TRANSPORTATION

GOOD FAITH EFFORTS DOCUMENTATION - DBE

DES-OE-0702 11A (REV 06/2012)

CONTRACT AMOUNT: **$924,203.10**

1. List items of work the Bidder made available to DBE firms. Identify those items of work the Bidder might otherwise perform with its own forces and those items that have been broken down into economically feasible units to facilitate DBE participation. For each item listed, show the dollar value and percentage of the total contract. The Bidder must demonstrate that sufficient work to meet the goal was made available to DBE firms.

Item of Work Offered	Bidder Normally Performs Item (Y/N)		Item Broken Down to Facilitate Participation (Y/N)		Amount ($)	Percentage of Contract
24. RELOCATE ROADSIDE SIGN	☐ Yes	☑ No	☑ Yes	☐ No	$875.00	0.1%
25. REMOVE CONCRETE CURB	☑ Yes	☐ No	☑ Yes	☐ No	$2,362.50	0.3%
26. SALVAGE CRASH CUSHION	☐ Yes	☑ No	☑ Yes	☐ No	$3,600.00	0.4%
27. CLEARING AND GRUBBING	☐ Yes	☑ No	☑ Yes	☐ No	$14,000.00	1.5%
28. ROADWAY EXCAVATION	☑ Yes	☐ No	☑ Yes	☐ No	$38,700.00	4.2%
29. IMPORTED BORROW	☑ Yes	☐ No	☑ Yes	☐ No	$6,000.00	0.6%
30. PRUNE EXISTING PLANTS	☐ Yes	☑ No	☑ Yes	☐ No	$6,500.00	0.7%
31. MAINTAIN EXISTING PLANTED AREAS	☐ Yes	☑ No	☑ Yes	☐ No	$9,000.00	1.0
32. WOOD MULCH	☐ Yes	☑ No	☑ Yes	☐ No	$27,470.00	3.0%
33. CHECK AND TEST EXISTING IRRIGATION FACILITIES	☐ Yes	☑ No	☑ Yes	☐ No	$9,800.00	1.1%
34. OPERATE EXISTING IRRIGATION FACILITIES	☐ Yes	☑ No	☑ Yes	☐ No	$9,800.00	1.1%
35. 3" PLASTIC PIPE (CLASS 315) (SUPPLY LINE)	☐ Yes	☑ No	☑ Yes	☐ No	$1,800.00	0.2%
36. 10" WELDED STEEL PIPE CONDUIT	☐ Yes	☑ No	☑ Yes	☐ No	$8,750.00	1.0%
37. MOVE-IN/MOVE-OUT (EROSION CONTROL)	☐ Yes	☑ No	☑ Yes	☐ No	$2,400.00	0.3%
38. HYDROMULCH	☐ Yes	☑ No	☑ Yes	☐ No	$2,215.20	0.2%
39. STRAW	☐ Yes	☑ No	☑ Yes	☐ No	$1,040.00	0.1%
40. HYDROSEED	☐ Yes	☑ No	☑ Yes	☐ No	$2,726.40	0.3%
41. CLASS 2 AGGREGATE BASE	☑ Yes	☐ No	☑ Yes	☐ No	$15,375.00	1.6%
42. MINOR HOT MIX ASPHALT	☑ Yes	☐ No	☑ Yes	☐ No	$58,050.00	6.3%
43. PLACE HOT MIX ASPHALT DIKE (TYPE E)	☐ Yes	☑ No	☑ Yes	☐ No	$4,900.00	0.5%

GRAND TOTAL POTENTIAL UDBE PERCENTAGE: CONTINUED ON NEXT PAGE.....

GRAND TOTAL POTENTIAL UDBE AMOUNT: CONTINUED ON NEXT PAGE.....

STATE OF CALIFORNIA - DEPARTMENT OF TRANSPORTATION

GOOD FAITH EFFORTS DOCUMENTATION - DBE

DES-OE-0302 11A (NEW 06/2012)

CONTRACT AMOUNT: **$924,203.10**

1 List items of work the Bidder made available to DBE firms. Identify those items of work the Bidder might otherwise perform with its own forces and those items that have been broken down into economically feasible units to facilitate DBE participation. For each item listed, show the dollar value and percentage of the total contract. The Bidder must demonstrate that sufficient work to meet the goal was made available to DBE firms

Item of Work Offered	Bidder Normally Performs Item (Y/N)	Item Broken Down to Facilitate Participation (Y/N)	Amount ($)	Percentage of Contract
44. PLACE HOT MIX ASPHALT (MISCELLANEOUS AREA)	☑ Yes ☐ No	☑ Yes ☐ No	$990.00	0.1%
45. (F) MINOR CONCRETE (MINOR STRUCTURE)	☑ Yes ☐ No	☑ Yes ☐ No	$6,270.00	0.7%
46. FURNISH SINGLE SHEET ALUMINUM SIGN (0.063"-UNFRAMED)	☐ Yes ☑ No	☑ Yes ☐ No	$756.00	0.1%
47. FURNISH SINGLE SHEET ALUMINUM SIGN (0.080"-UNFRAMED)	☐ Yes ☑ No	☑ Yes ☐ No	$2,520.00	0.3%
48. ROADSIDE SIGN - ONE POST	☐ Yes ☑ No	☑ Yes ☐ No	$200.00	0.02%
49. INSTALL SIGN (STRAP AND SADDLE BRACKET METHOD)	☐ Yes ☑ No	☑ Yes ☐ No	$300.00	0.03%
50. INSTALL ROADSIDE SIGN PANEL ON EXISTING POST	☐ Yes ☑ No	☑ Yes ☐ No	$900.00	0.1%
51. 18" ALTERNATIVE PIPE CULVERT	☑ Yes ☐ No	☑ Yes ☐ No	$2,600.00	0.3%
52. 24" ALTERNATIVE PIPE CULVERT	☑ Yes ☐ No	☑ Yes ☐ No	$18,000.00	1.9%
53. 18" REINFORCED CONCRETE PIPE	☑ Yes ☐ No	☑ Yes ☐ No	$3,630.00	0.3%
54. 36" CORRUGATED STEEL PIPE INLET (.064" THICK)	☑ Yes ☐ No	☑ Yes ☐ No	$2,700.00	0.3%
55. 24" ALTERNATIVE FLARED END SECTION	☑ Yes ☐ No	☑ Yes ☐ No	$375.00	0.04%
56. ROCK SLOPE PROTECTION (NO. 1, METHOD B)	☑ Yes ☐ No	☑ Yes ☐ No	$5,200.00	0.6%
57. ROCK SLOPE PROTECTION FABRIC (CLASS 8)	☑ Yes ☐ No	☑ Yes ☐ No	$1,800.00	0.2%
58. MINOR CONCRETE (CURB)	☑ Yes ☐ No	☑ Yes ☐ No	$20,900.00	2.3%
59. (F) MISCELLANEOUS IRON AND STEEL	☐ Yes ☑ No	☑ Yes ☐ No	$2,428.00	0.3%
60. CONCRETE BARRIER DELINEATORS	☐ Yes ☑ No	☑ Yes ☐ No	$672.00	0.1%
61. CONCRETE BARRIER MARKERS	☐ Yes ☑ No	☑ Yes ☐ No	$300.00	0.03%
62. CONCRETE BARRIER TRANSITION CONNECTION	☐ Yes ☑ No	☑ Yes ☐ No	$27,450.00	3.0%
63. ALTERNATIVE CRASH CUSHION SYSTEM	☐ Yes ☑ No	☑ Yes ☐ No	$100,000.00	10.8%

GRAND TOTAL POTENTIAL UDBE PERCENTAGE: **CONTINUED ON NEXT PAGE.....**

GRAND TOTAL POTENTIAL UDBE AMOUNT: **CONTINUED ON NEXT PAGE .....**

STATE OF CALIFORNIA • DEPARTMENT OF TRANSPORTATION

GOOD FAITH EFFORTS DOCUMENTATION - DBE

DES-OE-C102.11A (NEW 06/2012)

CONTRACT AMOUNT: **$924,203.10**

1. List items of work the Bidder made available to DBE firms. Identify those items of work the Bidder might otherwise perform with its own forces and those items that have been broken down into economically feasible units to facilitate DBE participation. For each item listed, show the dollar value and percentage of the total contract. The Bidder must demonstrate that sufficient work to meet the goal was made available to DBE firms.

Item of Work Offered	Bidder Normally Performs Item (Y/N)	Item Broken Down to Facilitate Participation (Y/N)	Amount ($)	Percentage of Contract
64. CONCRETE BARRIER (TYPE 60)	☐ Yes ☑ No	☑ Yes ☐ No	$95,480.00	10.3%
65. CONCRETE BARRIER (TYPE 60C)	☐ Yes ☑ No	☑ Yes ☐ No	$92,920.00	10.0%
66. THERMOPLASTIC PAVEMENT MARKING	☐ Yes ☑ No	☑ Yes ☐ No	$1,190.00	0.1%
67. MAINTAINING EXISTING TRAFFIC MANAGEMENT SYSTEM ELEMENTS DURING CONSTRUCTION	☑ Yes ☐ No	☑ Yes ☐ No	$10,000.00	1.1%
68. MODIFY RAMP METERING SYSTEM	☐ Yes ☑ No	☑ Yes ☐ No	$108,000.00	11.7%
69. MODIFY LIGHTING	☐ Yes ☑ No	☑ Yes ☐ No	$28,000.00	3.0%
71. ALTERNATIVE TEMPORARY CRASH CUSHION SYSTEM	☐ Yes ☑ No	☑ Yes ☐ No	$6,150.00	0.7%
	☐ Yes ☐ No	☐ Yes ☐ No		
	☐ Yes ☐ No	☐ Yes ☐ No		
	☐ Yes ☐ No	☐ Yes ☐ No		
	☐ Yes ☐ No	☐ Yes ☐ No		
	☐ Yes ☐ No	☐ Yes ☐ No		
	☐ Yes ☐ No	☐ Yes ☐ No		
	☐ Yes ☐ No	☐ Yes ☐ No		
	☐ Yes ☐ No	☐ Yes ☐ No		
	☐ Yes ☐ No	☐ Yes ☐ No		
	☐ Yes ☐ No	☐ Yes ☐ No		
	☐ Yes ☐ No	☐ Yes ☐ No		
	☐ Yes ☐ No	☐ Yes ☐ No		

GRAND TOTAL POTENTIAL UDBE PERCENTAGE: **98.7%**

GRAND TOTAL POTENTIAL UDBE AMOUNT: **$912,603.10**

STATE OF CALIFORNIA • DEPARTMENT OF TRANSPORTATION

GOOD FAITH EFFORTS DOCUMENTATION - DBE

DES-OE-0102.11A (NEW 06/2012)

2. List the names of certified DBEs and the dates on which they were solicited to bid on this project. Include the items of work offered and the dates and methods used for following up initial solicitations to determine with certainty whether the DBEs were interested. Attach copies of solicitations, telephone records, fax confirmations, etc.

Name of DBEs Solicited	Date of Initial Solicitation	Item(s) of Work	Follow Up Methods and Dates
"SEE SECTIONS 1, 2, 3, 4, 5, 6 & 7 ATTACHED"			

3. For each item of work made available, list the selected firm and its status as a DBE, the DBEs that provided quotes, the price quote for each firm, and the price difference for each DBE if the selected firm is not a DBE.

Item(s) of Work	Name of Selected Firm	DBE or non-DBE	Name of Rejected Firm	Quote ($)	Price Difference ($)
"SEE PAGE #9 (ATTACHED) FOR ITEM NO. 3 - GFE DOCUMENTATION"					

If the firm selected for the item is not a DBE, provide the reasons for the selection on a separate sheet and attach names, addresses, and phone numbers for the firms listed above.

GFE DOCUMENTATION CONTINUED FROM PAGE 8

3. For each item of work made available, list the selected firm and its status as a DBE, the DBEs that provided quotes, the price quote for each firm, and the price difference for each DBE if the selected firm is not a DBE.

Item(s) of work	Name of Selected Firm	DBE or non-DBE	Quote ($)	Name of Rejected Firm	DBE or non-DBE	Quote ($)	Price Difference ($)
SAWCUT ASPHALT CONCRETE	AUSTIN ENTERPRISE	DBE	$6,532.50	None			
	P. O. Box 81926 Bakersfield, CA 93380						
	Ph: (661) 589-1001 Fx: (661) 589-9509						
PLACE AC DIKE, PLACE MISC. ASPHALT	A. C. DIKE CO.	DBE	$5,063.50	None			
	2788 Venture Dr. Lincoln, CA 95648						
	Ph: (916) 652-0159 Fx: (916) 645-9618						
EROSION CONTROL - HYDROMULCH, STRAW, HYDROSEED	NITTA EROSION CONTROL	DBE	$10,819.20	None			
	3778 Del Mar Ave. Loomis, CA 95650-9051						
	Ph: (916) 652-7459 Fx: (916) 652-4376						
MBGR & CRASH CUSHIONS	PC&N CONSTRUCTION, INC.	DBE	$111,507.00	None			
	5301 Byron Hot Springs Road Byron, CA 94514						
	Ph: (925) 634-4567 Fx: (925) 634-4339						
TRAFFIC STRIPING & LEAD PLAN	SUPER SEAL & STRIPE	DBE	$10,290.00	ADANTA, INC.	DBE	$1,275.00	
	310 A Street P. O. Box 755 Fillmore, CA 93016			828 School Street Napa, CA 94559			
	Ph: (805) 524-7345 Fx: (805) 524-7428			Ph: (707) 709-8894 Fx: (707) 736-8368			
				UGE & ECS, INC.	DBE	$1,319.00	
				550 N. Figueroa St., Unit 6036 Los Angeles, CA 90012			
				Ph: (213) 625-1016 Fx: (310) 862-6879			

GFE DOCUMENTATION CONTINUED FROM PAGE 8

3. For each item of work made available, list the selected firm and its status as a DBE, the DBEs that provided quotes, the price quote for each firm, and the price difference for each DBE if the selected firm is not a DBE.

Item(s) of work	Name of Selected Firm	DBE or non-DBE	Quote ($)	Name of Rejected Firm	non-DBE	Quote ($)	Price Difference ($)
				VERIDICO GROUP, INC.	DBE	$12,825.00	
				P. O. Box 673 Roseville, CA 95661			
				Ph: (707) 317-0002 Fx: (707) 620-7000			
				ALFRED CIVIL ENGINEERING	DBE	$5,600.00	
				7604 Soquel Way Citrus Heights, CA 95610			
				Ph: (916) 241-5309 Fx: (916) 374-7383			
				ESWPPP CONSULTANTS, LLC	DBE	$1,190.00	
				902 Cortina Court Walnut Creek, CA 94598			
				Ph: (925) 451-1337 Fx: (925) 956-7191			
WATER POLLUTION CONTROL PLAN	TULLY CONSULTING GROUP	DBE	$650.00	LA FIRMA INC.	DBE	$650.00	
	180 S. First Street, Suite 9 Dixon, CA 95620			715 Ridge Road Nipomo, CA 93444			
	Ph: (707) 693-1926 Fx: (707) 471-0318			Ph: (805) 748-8576 Fx: (805) 929-0501			
				ESWPPP CONSULTANTS, LLC	DBE	$699.00	
				902 Cortina Court Walnut Creek, CA 94598			
				Ph: (925) 451-1337 Fx: (925) 956-7191			
HAULING MATERIAL	CLAY MIRANDA TRUCKING, INC.	DBE	$5,382.00	None			
	3220 W. Belmont Avenue Fresno, CA 93722						
	Ph: (559) 275-6250 Fx: (559) 275-6091						

GFE DOCUMENTATION CONTINUED FROM PAGE 8

3. For each item of work made available, list the selected firm and its status as a DBE, the DBEs that provided quotes, the price quote for each firm, and the price difference for each DBE if the selected firm is not a DBE.

Item(s) of work	Name of Selected Firm	DBE or non-DBE	Quote ($)	Name of Rejected Firm	non-DBE	Quote ($)	Price Difference ($)
REBAR	HARRIS REBAR	Non-DBE	$37,789.10	None			
	1384 N. Jackson Ave.						
	Fresno, CA 93703						
	Ph: (559) 251-7363						
	Fx: (559) 251-0435						
LANDSCAPE & IRRIGATION	WABO LANDSCAPE & CONSTRUCTION, INC.	Non-DBE	$70,530.00	None			
	726 Alfred Nobel Dr.						
	Hercules, CA 94547						
	Ph: (510) 741-9226						
	Fx: (510) 724-2391						
MODIFY RAMP METERING SYS, & MODIFY LIGHTING	MADCO ELECTRIC, INC.	Non-DBE	$120,000.00	None			
	2135 E. Front St.						
	Selma, CA 93662						
	Ph: (559) 896-4518						
	Fx: (559) 896-5637						

STATE OF CALIFORNIA - DEPARTMENT OF TRANSPORTATION

GOOD FAITH EFFORTS DOCUMENTATION - DBE

DES-OE-0102.11A (NEW 06/2012)

4. List the names and dates of each publication in which a request for DBE participation for this project was placed by the bidder. Attach copies of published advertisements or proofs of publication:

Publications	Dates of Advertisement
"SEE SECTIONS 2 & 3 ATTACHED"	

5. List the names of agencies and the dates on which they were contacted to provide assistance in contacting, recruiting and using DBE firms. If the agencies were contacted in writing, provide copies of supporting documents.

Name of Agency	Date of Contact	Method of Contact	Results
"SEE SECTIONS 1, 2, 3, & 4 ATTACHED"			

6. List efforts made to provide interested DBEs with adequate information about the plans, specifications, and requirements of the contract to assist them in responding to a solicitation. Identify the DBE assisted, the information provided, and the date of contact. Provide copies of supporting documents.

"SEE SECTIONS 2, 3, 9, 10, 11 & 12 ATTACHED"

7. List efforts made to assist interested DBEs in obtaining bonding, lines of credit, insurance, necessary equipment, supplies, materials, or related assistance or services, excluding supplies and equipment the DBE subcontractor purchases or leases from the prime contractor or its affiliate. Identify the DBE assisted, the assistance offered, and the date. Provide copies of supporting documents.

"SEE SECTIONS 3, 4, 5, 6, 7 & 12 ATTACHED"

8. Include additional data to support a demonstration of good faith efforts.

"SEE ATTACHED GOOD FAITH EFFORTS DOCUMENTATION"

NOTE: USE ADDITIONAL SHEETS OF PAPER IF NECESSARY.

ADA Notice For individuals with sensory disabilities, this document is available in alternate formats. For information call (916) 654-6410 or TDD (916) 654-3880 or write Records and Forms Management, 1120 N Street, MS-89, Sacramento, CA 95814.

Selected Vendors

AUSTIN **Austin Enterprise**

Quote Folder: SAWCUT Sawcut AC

Client #	Bidite	Activity	Resour	Description	Quantity	Unit	Plug Pric	Price	Extensio
28	280	280.05	4SAWC	ROADWAY EXCAVATION	1,950.00	LF	3.350	3.3500	6,532.50
Quoted Amount:									6,532.50
Plugged Amount:									

Vendor Total:	6,532.50	6,532.50
Vendor Minority Amount: DBE 100 %		6,532.50

AUSTIN ENTERPRISE

License #764893
P. O. Box 81926
Bakersfield, CA, 93380
661-589-1001 FAX 589-9509
Certified DBE/MBE/WBE CT-013602
Certified UDBE CT-013602

BID PROPOSAL

Contract: CDOT # 06-0M8204
Route 41 Fresno

Bid Date: September 3, 2014

BID ITEM # 28 / Roadway Excavation [portion]:

1,950 lf Saw cut only.....$3.35 / per lf.....$6,532.50

(6- Locations) 2- move-ons

Conditions for above items:
1. Contractor to supply traffic control as required.
2. Contractor to provide layout and clear access to work area
3. Contractor to provide water source on site, approved slurry disposal site within 10 mile of jobsite and pay all fees
4. Excludes capping of edge drains
5. Two move in included, additional moves at $500.00 each
6. Prior arrangements in writing are required for overtime work other than dictated by closure schedules
7. Contractor to provide lighting and sufficient safety apparatus for protection of our workmen

Note *- Union Signatory,
Insurance $5,000,000.00 liability,
No Bonding

FAX COVER SHEET

AUSTIN ENTERPRISE

License #764893
PO Box 81926
Bakersfield, CA, 93380
661-589-1001 FAX 589-9509
Certified DBE/MBE/WBE/UDBE
CT #013602

Send to: Emmett's Excavation	**From: Darold**
Attention: Estimating	**Date:** September 2, 2014
Fax number: 559-348-9272	**Phone number: 559-347-9188**

☐ **Urgent** ☐ **Reply ASAP** ☐ **Please comment** ☐ **Please review** ☐ **For your information**

Total pages, including cover: 2
Comments

Project: CDOT # 06-OM8204
Hwy 41 & 180, Various Locations in Fresno

Date: September 3, 2014

This transmission may contain confidential and/or privileged information. If you are not the addressee or authorized to receive this for the addressee, you must not use, copy, disclose or take any action based on this message or any information herein. If you have received this transmission in error, please advise the sender immediately by reply and destroy the material in its entirety. Thank you

Selected Vendors

ACDIKE **AC Dike Co**

Quote Folder: ACDIKE AC Dike

Client #	Bidite	Activity	Resour	Description	Quantity	Unit	Plug Pric	Price	Extensio
43	430	430.10	4ACDIK	PLACE HMA DIKE (TYPE E	490.00	LF	8.650	8.6500	4,238.50
44	440	440.10	4ACDIK	PLACE HMA (MISC. AREA)	11.00	SY	75.000	75.0000	825.00
Quoted Amount:									5,063.50
Plugged Amount:									

Vendor Total:	5,063.50	5,063.50
Vendor Minority Amount: DBE 100 %		5,063.50

RDV

A. C. DIKE CO.

Specialty Paving Inc.

SPECIALTY PAVING CONTRACTOR

QUOTATION: CDOT FRESNO CO RT 41 06-0M8204

BIDS: 9/3/14

"PLACE ONLY"* 490 LF ASPHALT DIKE TYPE "E" @ $8.65 LF
"PLACE" 11 SQYD MISC AREAS HOT MIX ASPHALT @ $75.00 SQYD

PRICE INCLUDES TACK AND ONE MOBILIZATION.
ASPHALT MATERIAL AND HAULING BY PRIME CONTRACTOR.
TRAFFIC CONTROL BY PRIME CONTRACTOR.

* **PLACE ONLY ASPHALT DIKE. SPECIFICALLY EXCLUDES SURFACE PREPARATION, BACKFILL, OR FOGSEAL.**

QUALIFIED MINORITY CONTRACTOR, DBE/WBE/UDBE # CT 000219
CAL. LIC. # 407417 NEV. LIC. #24188
2788 VENTURE DR. LINCOLN, CA. 95648
(916) 652-0159 FAX (916) 645-9618
WWW.ACDIKE.COM

Selected Vendors

NITTA **Nitta Erosion Control**

Quote Folder: EROSION Erosion Control

Client #	Biditem	Activity	Resourc	Description	Quantity	Unit	Price	Extension
14	140	140.10	4EROS	TEMP DRAINAGE INLET PRO	1.00	EA	400.0000	400.00
15	150	150.10	4EROS	TEMP SILT FENCE	1,150.00	LF	4.0000	4,600.00
37	370	370.10	4EROS	MOVE-IN/MOVE-OUT (EROSI	2.00	EA	1,450.0000	2,900.00
38	380	380.10	4EROS	HYDROMULCH	8,520.00	SF	0.0700	596.40
39	390	390.10	4EROS	STRAW	0.40	TN	1,547.0000	618.80
40	400	400.10	4EROS	HYDROSEED	8,520.00	SF	0.2000	1,704.00
Quoted Amount:								10,819.20
Plugged Amount:								

Vendor Total:	10,819.20
Vendor Minority Amount: DBE 100 %	10,819.20

Nitta Erosion Control

a division of Nitta, Inc.

- HYDROSEEDING
- EROSION CONTROL
- STRAW MULCHING
- PNEUMATIC MULCH SPREADING
- BONDED FIBER MATRIX
- SILT FENCE
- DRILL SEEDING
- FIBER ROLLS / WATTLES
- BLANKETS

STATE LICENSE #401640 • C-27, C-61/D-59

3778 DEL MAR AVENUE • LOOMIS, CA 95650-9051 • PH (916) 652-7459 • FAX (916) 652-4376

nittaec@gmail.com • www.nittainc.net

Bid - Proposal

September 2, 2014 To All General Contractors Requesting Sub-Bids.

Re: Caltrans Project 06-Fre-41,180-Var, Caltrans Contract No. 06-0M8204, Addendum Nos. 1-5, Widen shoulder and construct concrete barrier in Fresno County at various locations. Bid Date: September 3, 2014 (2:00 p.m.).

Certified as DBE #217 (exp. 12/01/15), as WMBE VON #10120139 (exp. 12/28/16) per CPUC Supplier Clearinghouse, and as SBE (Micro) #0011303 (exp. 05/31/16). CCL #401640 C-27, C-61/D-59 (exp. 03/31/15). California Department of Industrial Relations Registration No. 1000000478 (exp. 06/30/15). Quotation is valid for (60) calendar days from bid date and unless quantities, scope of work and/or date of installation change(s). Nitta, Inc. dba Nitta Erosion Control is full signatory member of Local 185 of the Laborers' Union. Most current Laborers' Trust Fund Employer's Contribution Letter is available upon request to verify union membership status.

Item No.	Item	Unit of Measure	Estimated Quantity	Item Price	Total
14	Temporary Drainage Inlet Protection	EA	1	$ 400.00	$ 400.00
15	Temporary Silt Fence	LF	1,150	$ 4.00	$ 4,600.00
37	Move-In/Move-Out (Erosion Control)	EA	2	$1,450.00	$ 2,900.00
38	Hydromulch	SQFT	8,520	$ 0.07	$ 596.40
39	Straw	TON	0.4	$1,547.00	$ 618.80
40	Hydroseed	SQFT	8,520	$ 0.20	$ 1,704.00
	Totals				$ 10,819.20

BID ITEMS MAY BE SEPARATED (EXCEPT FOR #37-#40).

Notes: 1) Total price includes submittals, certified payrolls, standard certificates of insurance, waiver of subrogation (if required), night work, materials, labor, equipment (**air pollution control (CARB PERP- and DOORS-compliant)**), taxes on materials, incidentals and installation as per specifications (unless as otherwise noted).

Please note that Temporary Drainage Inlet Protection and Temporary Silt Fence include installation only, not maintenance or removal. In addition, please note that we have the only patented dust suppression system for pneumatic straw mulching in the country.

2) Total price excludes re-installation of Temporary Drainage Inlet Protection, maintenance and removal of Temporary Drainage Inlet Protection, re-installation of Temporary Silt Fence, maintenance and removal of Temporary Silt Fence, site preparation (trash, debris and weed removal and disposal, removal and disposal of loose rocks larger than 2 ½ inches in maximum dimension unless otherwise authorized), placement of stakes or other suitable markers at the locations designated by the Engineer, re-installation of Hydromulch, coloring agent (already included in the cellulose fiber), re-installation of Straw, straw incorporation, re-installation of Hydroseed, Fiber Rolls, Bonded Fiber Matrix (BFM), rolled erosion control products (RECPs), Silt Fence, night work, **dust control (our straw mulching machines are retrofitted for dust suppression with the "Dust Dog" (United States Patent US 8,550,384 B2 (10/08/13))**, costs of local licenses, permits, fees and/or other taxes, watering, maintenance, pedestrian protection and traffic control.

3) One (1) move-in is included in the total bid price (for Temporary Drainage Inlet Protection and for Temporary Silt Fence). Additional move-ins caused by weather related issues, other delays in work and other conditions out of our control is at $1,600.00 each. Additional move-ins for Hydromulch, Straw and Hydroseed shall be covered under Move-In/Move-Out (Erosion Control). Approximately one (1) working night (weekends and holidays excluded) is required to complete an estimated 1 EA of Temporary Drainage Inlet Protection and an estimated 1,150 LF of Temporary Silt Fence. Approximately one (1) working night(weekends and holidays excluded) is required to complete an estimated 8,520 SQFT of Hydromulch, an estimated 0.4 TON of Straw and an estimated 8,520 SQFT of Hydroseed. Stand-by time will be billed at $390.00 per hour for Temporary Drainage Inlet Protection and Temporary Silt Fence, and at $370.00 per hour for Hydromulch, for Straw and for Hydroseed.

4) Bond premium (performance and payment) rate is 2.5%. Minimum bond premium charge per project is $150.00. Bond premium amount is not included in the bid price. Commercial Liability Insurance does not cover Railroad Protective Insurance, Coverage for "volunteers," Umbrella Liability Limits and/or Excess Liability Limits, Professional Liability, Avian Influenza A (Avian Flu – Absolute), Employment Related Practices, Silica (Absolute), Residential Construction Defect PCO, Construction Wrap-UP/OCIP Exclusion, EIFS & Spray-on Siding, Known Damage or Injury, Biological Contaminants - Mold, Fungus, Micro-Organisms (covered under Pollution policy), Engineers, Architects, or Surveyors Professional Liability, Nuclear Energy Liability, Lead (Absolute), Asbestos (Absolute), Injury to Independent Contractors, Residential Construction Activities (Absolute except Apartments), Condominium Conversion, Beryllium, Advertising Liability and Certified Acts of Terrorism. With the exception that our bid-proposal shall in no event be construed to require indemnification by Subcontractor to a greater extent than permitted under the public policy of the State of California, Subcontractor shall indemnify and save harmless Owner and Contractor only arising out of or in connection with Subcontractor's operations to be performed under this bid-proposal.

5) Terms: Due and payable within 30 days from date of installation and/or as per Business and Professional Code §7108.5 and Public Contract Code §10262.5 (for progress payments) and/or as per Public Contract Code §7107 (for retention due).

6) Attorney fees and interest: If court action be instituted on this invoice, general contractor promises to pay reasonable attorney fees. A late payment charge of 1 1/2% per month will be charged on all invoices not paid within terms of quote. This is annual percentage rate of 18 %.

7) **General Contractor to provide and pay for water source at each jobsite location** (i.e., fire hydrant with valid water meter and/or water permit, 2,000 gallon capacity water truck, or other approved source at a minimum rate of 200 g.p.m. and/or at a minimum vertical height of 14 feet (for water towers or stands)). We'll require approximately 1,400 gallons of water for an estimated 8,520 SQFT of

Hydromulch and for an estimated 8,520 SQFT of Hydroseed. **If water isn't made available at each jobsite location, this bid-proposal is invalid.**

8) General Contractor to provide good, drivable truck access to each site to be treated with Temporary Drainage Inlet Protection, with Temporary Silt Fence, with Hydromulch, with Straw and with Hydroseed.

9) Final field measured quantities shall be provided by General Contractor and/or Owners' Representative prior to installation of Temporary Drainage Inlet Protection, of Temporary Silt Fence, of Hydromulch, of Straw and of Hydroseed. If final field measurement shall be required of Nitta Erosion Control at jobsite, it shall be performed on a time and material basis with an authorized representative from the General Contractor and Owner in attendance.

Thank you for the opportunity to quote on this project.

Yours truly,

Scott K. Nitta

Scott K. Nitta, President
Nitta Erosion Control

BUSINESS ENTERPRISE CERTIFICATE

NITTA EROSION CONTROL

3778 DEL MAR AVENUE
LOOMIS, CA 95650 9051
Owner: LAURA J BILLS

Business Structure: CORPORATION

STATE MINORITY BUSINESS ENTERPRISE

This Certification Not Valid For Federal Aid Contracts

This certificate acknowledges that said firm is approved by the California Department of Transportation as a State Minority Business Enterprise or State Women Business Enterprise (or in some cases both) in accordance with Assembly Bill Number 486, Chapter 1329 and the California Public Code, Chapter 2.5 (commencing with Section 2050), for the following NAICS codes:

* 561730 Landscaping Services

* Indicates primary NAICS code

CERTIFYING AGENCY:
DEPARTMENT OF TRANSPORTATION
1823 14TH STREET, MS 79
SACRAMENTO, CA 95814 0000
(916) 324-1700

Firm Number : 217
Renewal Date : December 1, 2015

November 22, 2013

Janice Salais, CERTIFYING AGENCY REPRESENTATIVE

Back To Query Form

Search Returned 1 Records

Fri Jun 20 15:55:38 PDT 2014

Query Criteria
Firm ID: 217
Firm/DBA Name: Nitta Erosion Control
City: Loomis
Firm Type: DBE

Firm ID	217
Firm/DBA Name	NITTA EROSION CONTROL
Address Line1	3778 DEL MAR AVENUE
Address Line2	
City	LOOMIS
State	CA
Zip Code1	95650
Zip Code2	9051
Mailing Address Line1	
Mailing Address Line2	
Mailing City	
Mailing State	
Mailing Zip Code1	
Mailing Zip Code2	
Certification Type	DBE
EMail	nittaec@gmail.com
Contact Name	LAURA BILLS
Area Code	(916)
Phone Number	652-7459
Fax Area Code	(916)
Fax Phone Number	652-4376
Agency Name	DEPARTMENT OF TRANSPORTATION
Counties	01; 02; 03; 04; 05; 06; 07; 08; 09; 10; 11; 12; 15; 16; 17; 18; 20; 21; 22; 23; 24; 25; 27; 28; 29; 31; 32; 34; 35; 38; 39; 41; 43; 44; 45; 46; 47; 48; 49; 50; 51; 52; 53; 54; 55; 57; 58;
Districts	01; 02; 03; 04; 05; 06; 10;
DBE NAICS	561730;
ACDBE NAICS	
Work Codes	C2021 HYDROSEEDING; C2030 EROSION CONTROL; C2066 TEMPORARY EROSION CONTROL; C8001 TEMPORARY FENCING;
Licenses	C27 Landscaping Contractor; D59 Hydroseed Spraying;
Trucks	
Gender	F
Ethnicity	ASIAN PACIFIC
Firm Type	DBE

Back To Query Form

Selected Vendors

PCN **PCN CONSTRUCTION**

Quote Folder: MBGR MBGR

Client #	Bidite	Activity	Resour	Description	Quantity	Unit	Plug Pric	Price	Extensio
17	170	170.10	4MBGR	TREATED WOOD WASTE	4,680.00	LB	0.350	0.3500	1,638.00
18	180	180.10	4MBGR	REMOVE GUARDRAIL	1,110.00	LF	19.900	19.9000	22,089.00
26	260	260.10	4MBGR	SALVAGE CRASH CUSHIO	2.00	EA	1,480.000	1,480.0000	2,960.00
63	630	630.50	4MBGR	ALT CRASH CUSHION SYS	5.00	EA	16,964.000	16,964.0000	84,820.00
~~72~~	~~720~~	~~720~~.10	~~4MBGR~~	~~MOBILIZAT~~ION	~~1.00~~	~~LS~~	~~1.000~~	~~1.0000~~	~~1.00~~
Quoted Amount:									~~111,508.00~~ 111,507.00
Plugged Amount:									111,507.00
Vendor Total:							111,508.00		~~111,508.00~~
Vendor Minority Amount: DBE 100 %									~~111,508.00~~

F N CONSTRUCTION, INC.
General Engineering Contractor Class "A"
State Contractor License No. 771652

Certified Small Business No. 0021507
CERTIFIED DBE/UDBE No. 39218

5301 Byron Hot Springs Road
Byron Hot Springs Road, Byron CA 94514
(925) 634-4567 Fax (925) 634-4339

PRICES ARE GOOD FOR 30 DAYS

We are pleased to submit the following bid:

Contract	06-0M8204
Project	06-Fre-41,180-Var
Federal Aid	ACHSNHPG-X019(028)E
Bid Date	9/3/2014

ITEM NO.	DESCRIPTION	QUANTITY	UNIT PRICE	TOTAL
17	Treated Wood Waste	4680 LB	$ 0.35	$ 1,638.00
18	Remove Guardrail	1110 LF	$ 19.90	$ 22,089.00
26	Salvage Crash Cushion	2 EA	$ 1,480.00	$ 2,960.00
63	Alternative Crash Cushion System	5 EA	$ 16,964.00	$ 84,820.00
			TOTAL	$ 111,507.00

Inclusions:
1. Furnish & Install Per Plans & Specs
2. Tax Included
3. Salvage Weed Mat @ Shields & Shaw Avenue per Section 15-2.03 A (1)
4. One Move In, Additional Move Ins @ $1,300.00 EA
5. Addendum #1 - #5

Exclusions:
1. Permits and Fees (if any)
2. Clearing, Grubbing, Grading, Staking, Backfill, Embankment Widening
3. A. C. or Concrete Patch
4. Traffic Control
5. Layout/Excavation and Concrete Pads for Item #63
6. Removal of Existing Concrete Pads for Item #26
7. Liability for All Un-Marked Underground Utilities

P C & N CONSTRUCTION IS A UNION CONTRACTOR - IRONWORKERS, LABORERS, OPERATING ENGINEERS

P C & N Construction Inc. shall fully indemnify Contractor for any liability arising out of P C & N Construction, Inc. work or products, but only to the extent of P C & N Construction, Inc. liability and not that of anyone else. P C & N Construction, Inc. maintains insurance coverage for their work hereunder, including $2,000,000 Products-Comp/Op Agg and a 11/85 Additional In[illegible]ed Endorsement.

FOUNDATION SPECIFICATIONS:

THE TAU-II CRASH CUSHION SYSTEM HAS BEEN DESIGNED TO ATTACH TO CONCRETE OR ASPHALT FOUNDATIONS. USE THE ANCHORAGE SPECIFIED BELOW DEPENDING ON THE FOUNDATION AT THE JOB SITE. REFERENCE UNIVERSAL TAU-II FOUNDATION DRAWINGS FOR FURTHER DETAIL.

1.) CONCRETE PAD

FOUNDATION: MINIMUM 6 IN. [150 mm] REINFORCED PCC PAD OR 8 IN. [200 mm] NONREINFORCED PCC PAD

ANCHORAGE: 3/4 IN. [20 mm] X 6 1/2 IN. [210 mm] GALVANIZED ANCHOR WITH 6 IN. [150 mm] EMBEDMENT

2.) ASPHALT OVER SUBBASE

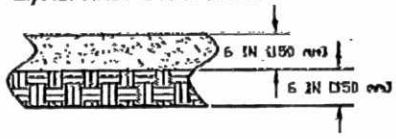

FOUNDATION: MINIMUM 6 IN [150 mm] AC OVER 6 IN. [150 mm] COMPACTED DGA SUBBASE

ANCHORAGE: 3/4 IN. [20 mm] X 18 IN. [460 mm] GALVANIZED ANCHORS WITH 16 IN. [410 mm] EMBEDMENT

ASPHALT ANCHORING KIT REQUIRED

3.) ASPHALT ONLY

FOUNDATION: MINIMUM 8 IN. [200 mm] AC

ANCHORAGE: 3/4 IN. [20 mm] X 18 IN. [460 mm] GALVANIZED ANCHORS WITH 16 IN. [410 mm] EMBEDMENT

ASPHALT ANCHORING KIT REQUIRED

4.) ASPHALT OVER P.C. CONCRETE

FOUNDATION: AC OVER PCC.

ANCHORAGE: 3/4 IN. [20 mm] GALVANIZED ANCHORS WITH MINIMUM 6 IN. [150 mm] EMBEDMENT IN PCC - ASPHALT ANCHORING KIT NOT REQUIRED
OR
IF 6 IN. [150 mm] EMBEDMENT IN PCC IS NOT POSSIBLE USE 3/4 IN. [20 mm] X 18 IN. [460 mm] GALVANIZED ANCHORS WITH 16 IN. [410 mm] EMBEDMENT - ASPHALT ANCHORING KIT REQUIRED

MATERIAL SPECIFICATIONS

PORTLAND CEMENT CONCRETE (PCC)

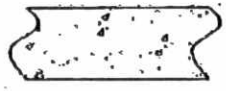

STONE AGGREGATE CONCRETE MIX, 4,000 PSI [28 MPa] MINIMUM COMPRESSIVE STRENGTH (SAMPLING PER ASTM C31-94 OR ASTM C42-94A, TESTING PER ASTM C39-94)

ASPHALTIC CONCRETE (AC)

AR-4000 A.C. (PER ASTM D3381 "83") .75" MAXIMUM, MEDIUM (TYPE A OR B) AGGREGATE

SIEVE SIZE	% PASSING
1"	100
3/4"	95-100
3/8"	85-90
No. 4	49-64
No. 8	33-40
No. 50	16-21
No. 200	3-6

COMPACTED SUBBASE (DGA)

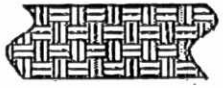

6 IN. [150 mm] MINIMUM DEPTH, 95% COMPACTION, CLASS 2 AGGREGATE

SIEVE SIZE	% PASSING
3"	100
2 1/2"	90-100
No. 4	40-90
No. 200	0-20

REV.	CHANGES	DATE	BY	REQ'D	NEXT ASSY.	ITEM
A	SEE ECN 00589	03/09/04	GAD			

SCALE: FULL

	DATE	INIT.
DRAWN BY	01/09/04	GAD
APPR'D BY		JSM

Standard Tolerance
Angular ± 1/2°
Fractional ± 1/16
Dec .XXX= ± .010
Dec .XX= ± .030

TITLE: FOUNDATION SPECIFICATIONS

MODEL	DRAWING NUMBER	REV.
	A040113	A

BARRIER SYSTEMS

Universal TAU-II Crash Cushion APPENDIX C

BARRIER SYSTEMS

3 Ea

NOTES:

1.) REFERENCE UNIVERSAL TAU-II FOUNDATION DIMENSION CHART FOR SPECIFIC SYSTEM FOUNDATION DIMENSIONS.
2.) FOUNDATION MATERIAL, SPECIFICATIONS, AND ANCHORAGE MUST BE IN ACCORDANCE WITH BSI FOUNDATION SPECIFICATIONS FOR A CONCRETE PAD. REFERENCE BSI DRAWING A040113.
3.) THE CONCRETE REINFORCEMENT SHOWN IS RECOMMENDED TO ENSURE ADEQUATE FOUNDATION INTEGRITY FOR PROPER IMPACT PERFORMANCE. VARIATIONS MAY BE REVIEWED AND DETERMINATIONS MADE AS TO EQUIVALENCE BY PROJECT ENGINEER.
4.) ALL REBAR IS #5 [15mm].
5.) IF FOUNDATION EXTENDS FROM A CONCRETE CURB, WALL, ABUTMENT, OR OTHER CONCRETE HAZARD, PLACE BACKSTOP AGAINST THE HAZARD AND SUBTRACT 10" FROM DIMENSION "L".
6.) TORQUE ANCHORS TO 120 FT-LBF [160 N-m].
7.) ANCHORING COMPOUND MUST MEET BSI SPECIFICATIONS.

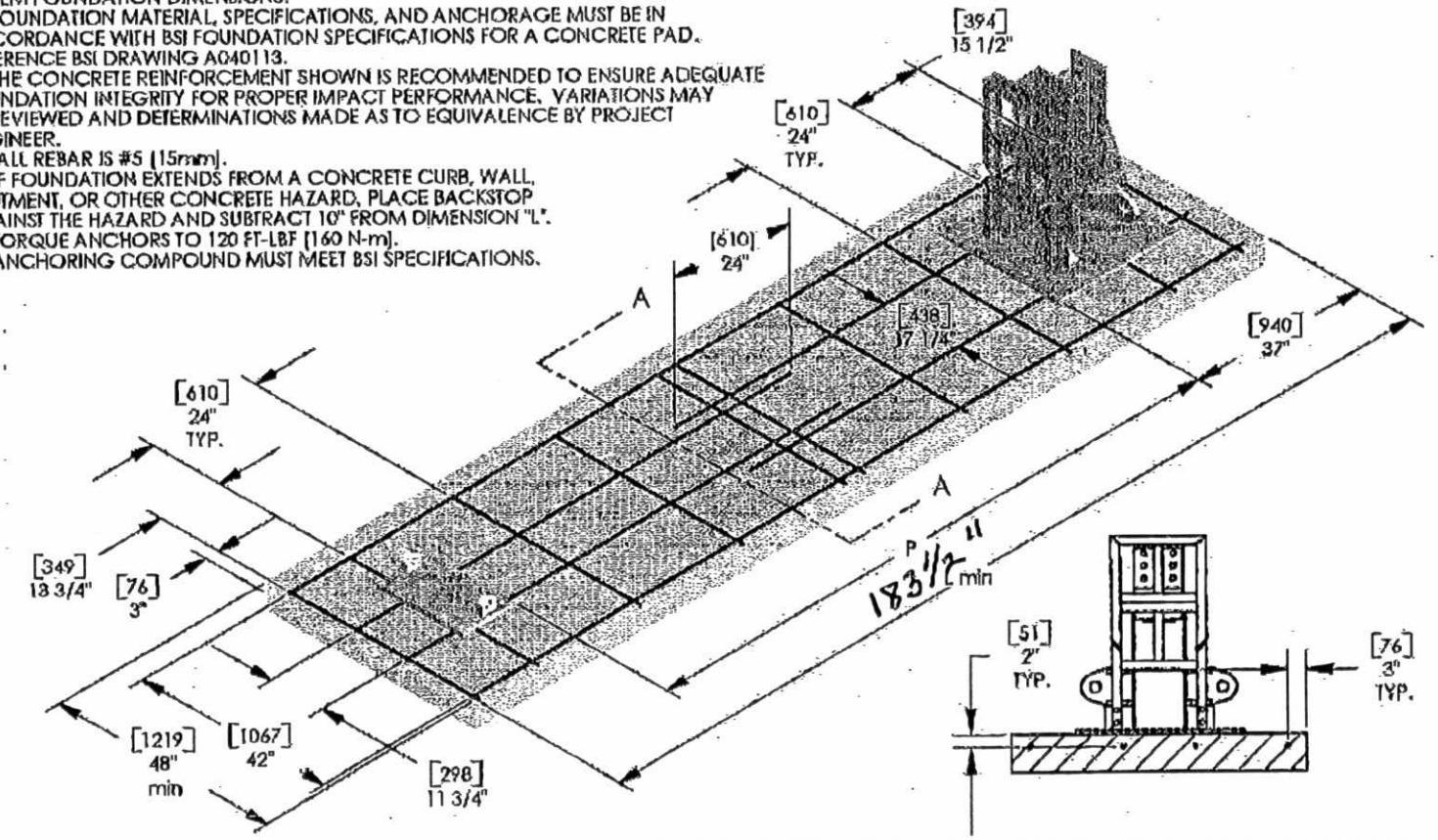

REV.	CHANGES	DATE	BY	REQD	NEXT ASSY.	ITEM
				1	B010708	1

SCALE: 1:24

	DATE	INIT.
DRAWN BY	01/08/04	GAD
APPR'D BY		JSM

Standard Tolerance
Angular +/- 1/2 Deg.
Fractional +/- 1/16
Dec. XXX= +/- .010
Dec. XX= +/- .030

TITLE:
UNIVERSAL TAU-II FOUNDATION, COMPACT BACKSTOP

SECTION A-A

MODEL	DRAWING NUMBER	REV.
	A040102	

BARRIER SYSTEMS

NOTES:

1.) REFERENCE UNIVERSAL TAU-II FOUNDATION DIMENSION CHART FOR SPECIFIC SYSTEM FOUNDATION DIMENSIONS.
2.) FOUNDATION MATERIAL, SPECIFICATIONS, AND ANCHORAGE MUST BE IN ACCORDANCE WITH BSI FOUNDATION SPECIFICATIONS FOR A CONCRETE PAD. REFERENCE BSI DRAWING A040113.
3.) THE CONCRETE REINFORCEMENT SHOWN IS RECOMMENDED TO ENSURE ADEQUATE FOUNDATION INTEGRITY FOR PROPER IMPACT PERFORMANCE. VARIATIONS MAY BE REVIEWED AND DETERMINATIONS MADE AS TO EQUIVALENCE BY PROJECT ENGINEER.
4.) ALL REBAR IS #5 [15mm].
5.) IF FOUNDATION EXTENDS FROM A CONCRETE CURB, WALL, ABUTMENT, OR OTHER CONCRETE HAZARD, PLACE BACKSTOP AGAINST THE HAZARD AND SUBTRACT 10" FROM DIMENSION "L".
6.) TORQUE ANCHORS TO 120 FT-LBF [160 N-m].
7.) ANCHORING COMPOUND MUST MEET BSI SPECIFICATIONS.

2 Ea

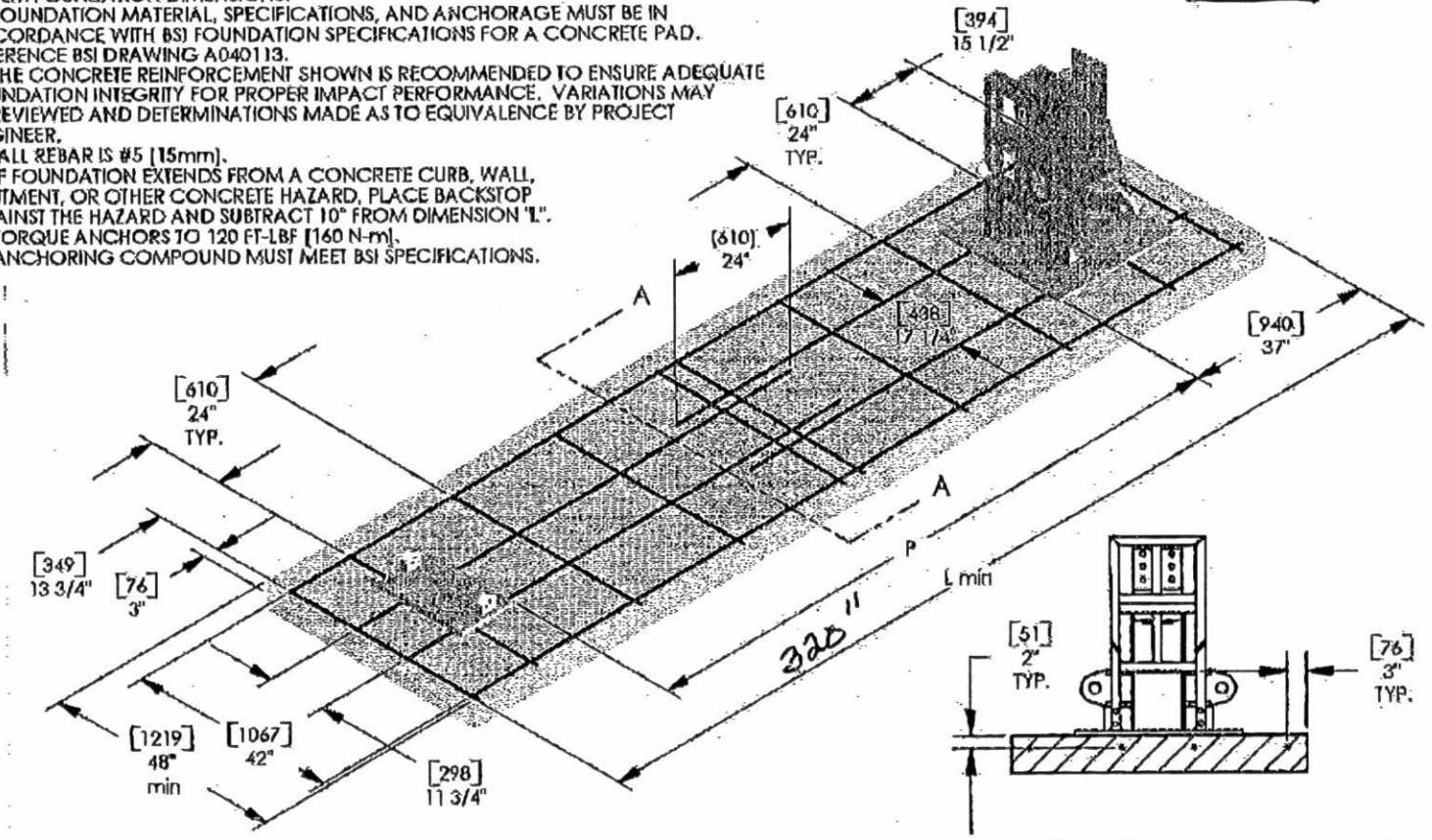

REV.	CHANGES	DATE	BY	REQD	NEXT ASSY.	ITEM
				1	B010708	1

SCALE: 1:24

	DATE	INIT.
DRAWN BY	01/00/04	GAD
APPRD BY		JSM

Standard Tolerance: Angular +/- 1/2 Deg. Fractional +/- 1/16 Dec. .XXX= +/-.010 Dec. .XX= +/-.030

TITLE: UNIVERSAL TAU-II FOUNDATION, COMPACT BACKSTOP

SECTION A-A

MODEL	DRAWING NUMBER	REV.
	A040102	

CALIFORNIA UNIFIED CERTIFICATION PROGRAM (CUCP)

AGENCY	SAN FRANCISCO BAY AREA RAPID TRANSIT DISTRICT
DEPARTMENT	OFFICE OF CIVIL RIGHTS
ADDRESS	300 LAKESIDE DRIVE, 18TH FLOOR
CITY, STATE ZIP	OAKLAND, CA 94612
PHONE	(510) 464-6884
FAX	(510) 464-7587

December 2, 2010

CHRISTI PLUM
PC&N CONSTRUCTION
5301-F BYRON HOT SPRINGS ROAD
BYRON, CA 94514

Re: DBE Certification

We are pleased to advise you that after careful review of your application and support documentation, the San Francisco Bay Area Rapid Transit District (BART) has determined that your firm meets the eligibility standards to be certified as a Disadvantaged Business Enterprise (DBE) under the U.S. Department of Transportation Regulations 49 CFR Part 26 as amended. Your firm has been added to the California Unified Certification Program (CUCP) database of certified DBE under the specific expertise codes. The **Expertise Code(s)** for your business is/are:

237310 Highway, Street, Bridge Construction – Metal Beam Rail

Please be advised that your DBE certification status applies only for the above code(s) and any additions, revisions and changes must be submitted to the BART Office of Civil Rights (OCR) for review and approval. Your DBE certification status will be honored by all of the CUCP members.

Your DBE certification is **good for five years** and must be renewed on December 1, 2015. Our office will notify you, prior to the renewal date, of the documentation required to recertify your firm with BART. DBE certification is subject to review at any time. However, it is your responsibility to notify this office of any change in ownership and/or control, as well as current address and phone number prior to your recertification date.

Should you have any questions, please contact OCR at (510) 464-6103

Sincerely,

Ron A. Granada
Sr. Civil Rights Officer

CALIFORNIA UNIFIED CERTIFICATION PROGRAM
DISADVANTAGED BUSINESS ENTERPRISE CERTIFICATE

PC&N CONSTRUCTION, INC

5301-F BYRON HOT SPRINGS ROAD
BYRON, CA 94514

Owner: CHRISTI PLUM
Business Structure: CORPORATION

This certificate acknowledges that said firm is approved by the California Unified Certification Program (CUCP) as a Disadvantaged Business Enterprise (DBE) as defined by the U.S. Department of Transportation (DOT) CFR 49 Part 26, as may be amended, for the following NAICS codes:

NAICS Code(s) * Indicates primary NAICS code

* 237310 Highway, Street, and Bridge Construction

Work Category Code(s)

C0683	GUARD RAILINGS & BARRIERS	C8320	METAL BEAM GUARD RAILING

Licenses

A General Engineering Contractor

CERTIFYING AGENCY:
BAY AREA RAPID TRANSIT DISTRICT (BART)
300 LAKESIDE DRIVE, 18TH FLOOR
OAKLAND, CA 94612-0000
(510) 464-6195

UCP Firm Number 39218

Kelly Smith
CUCP OFFICER

February 13, 2012

Selected Vendors

SUPERSEAL **Super Seal & Stripe**

Quote Folder: STRIPE STRIPING

Client #	Bidite	Activity	Resour	Description	Quantity	Unit	Plug Pric	Price	Extensio
1	10	10.01	4STRIP	LEAD COMPLIANCE PLAN	1.00	LS	800.000	800.0000	800.00
5	50	50.10	4STRIP	TEMP TRAFFIC STRIPE (P	120.00	LF	1.000	1.0000	120.00
19	190	190.10	4STRIP	REMOVE THERMOPLASTI	140.00	SF	2.500	2.5000	350.00
66	660	660.10	4STRIP	THERMO PAVEMENT MAR	170.00	SF	6.000	6.0000	1,020.00
72	720	720.20	4STRIP	MOBILIZATION	1.00	LS	8,000.000	8,000.0000	8,000.00
Quoted Amount:									10,290.00
Plugged Amount:									

Vendor Total:	10,290.00	10,290.00
Vendor Minority Amount: DBE 100 %		10,290.00

Airport * Highway * Street * Parking Lot * Striping * Pavement Markings * Markers * Thermoplastic * Signs * Sealcoat * Crackfill

CA LIC. # 396627, CLASS C-32 - MBE/SBE/ UDBE #2003

CORPORATE OFFICE: 310 A STREET, P.O. BOX 755 FILLMORE, CA 93016
SATELLITE OFFICE: 151 AIRPORT ROAD, KING CITY, CA 93930
PH: (805) 524-7345 / FAX: (805) 524-7428

ESTIMATE

COMPANY: ATTN:
PHONE: FAX: EMAIL:
JOB NAME: **CALTRANS 06-0M8204 - CONSTRUCTION ON ROUTES 41 & 180**
ADDRESS: **VARIOUS LOCATIONS** CITY : FRESNO, CA
PLANS: YES SPECS: YES
ESTIMATOR : TREVOR EMAIL: trevor@supersealandstripe.com

BID DATE	ACCEPTANCE	START DATE	COMPLETION DATE
9/3/14			

ITEM #	DESCRIPTION	QTY	U/M	U.C.	TOTAL
	REMOVE BY GRINDING AND APPLY PAINT & THERMOPLASTIC				
1	LEAD COMPLIANCE PLAN (PARTIAL - FOR OUR WORK ONLY)	1	LS	$800.00	$800.00
5	TEMPORARY TRAFFIC STRIPE (PAINT)	120	LF	$1.00	$120.00
19	REMOVE THERMOPLASTIC PAVEMENT MARKING	140	SF	$2.50	$350.00
66	THERMOPLASTIC PAVEMENT MARKING	170	SF	$6.00	$1,020.00
70	MOBILIZATION	1	LS	$8,000.00	$8,000.00
	THIS PROPOSAL EXCLUDES THE FOLLOWING: CONSTRUCTION AREA SIGNAGE DETOUR SIGNAGE / RAMP CLOSURE ADVANCED NOTICE SIGNS POSTING OF TEMPORARY NO PARKING SIGNS SIGNAGE MESSAGE BOARDS HAZARDOUS MATERIAL REMOVAL AND DISPOSAL TRAFFIC CONTROL SURFACE PREP PRIOR TO STRIPING REMOVAL OF CURING COMPOUND				
	BASED ON ONE MOVE-IN. ADDITIONAL MOVE- INS @ $4,000/EA				
	CONTRACTOR IS TO PROVIDE AN ON-SITE LOCATION TO STOCKPILE REMOVAL DEBRIS AND PAY ALL ASSOCIATED COSTS/FEES FOR HAUL-OFF AND DISPOSAL.				
	PRICE COVERS LISTED ITEMS ONLY.				
	DOWN TIME CAUSED BY ANYTHING BEYOND THE CONTROL OF SUPER SEAL AND STRIPE WILL BE BILLED AT $125/MAN HOUR				
	ALL ITEMS MUST BE USED FOR A VALID PROPOSAL. REMOVAL OF ITEMS FROM THIS PROPOSAL WILL NOT BE ACCEPTED.				
	INCLUDES LAYOUT ON THE SAME DAY AS STRIPING. IF LAYOUT IS REQUIRED ON DAYS PRIOR TO INSTALLATION, AN ADDITIONAL MOBILIZATION WILL BE BILLED.				
	IF A LEAD AWARENESS CLASS IS REQUIRED BY THE STATE, AN ADDITIONAL CHARGE OF $1,000 WILL BE BILLED. THE CLASS WILL BE HELD AT OUR OFFICE IN FILLMORE, CA.				
	PRICE DOES NOT INCLUDE PREMIUM FOR SATURDAY OR SUNDAY WORK HOURS				
	CALL TIM TANNER FOR SCHEDULING - (805) 432-3620	PAGE 1 OF 3		TOTAL	$10,290.00

A CONTRACT AND FIFTEEN (15) WORKING DAY'S NOTICE MUST BE GIVEN PRIOR TO STARTING WORK.
UPON ACCEPTANCE PLEASE SIGN AND RETURN. ABOVE PRICE NOT VALID AFTER 30 DAYS.

Airport * Highway * Street * Parking Lot * Striping * Pavement Markings * Markers * Thermoplastic * Signs * Sealcoat * Crackfill

CA LIC. # 396627, CLASS C-32 - MBE/SBE/ UDBE #2003

310 A STREET, P.O. BOX 755 FILLMORE, CA 93016
PH: (805) 524-7345 / FAX: (805) 524-7428

GENERAL LIABILITY INSURANCE IS INCLUDED WITH LIMITS OF $1,000,000 PER OCCURRENCE/$2,000,000 GENERAL AGGREGATE/ $2,000,000 COMPLETED OPERATIONS AGGREGATE AND BLANKET ADDITIONAL INSURED ENDORSEMENT WITH WORDING EQUIVALENT TO GC2010 11-85 WHEN REQUIRED BY WRITTEN CONTRACT. TYPE 3 INDEMITY AGREEMENT APPLIES. EXCLUDES ANY WAIVER SUBROGATIONS ON WORKERS COMP. SEE NEXT PAGE OF THIS PROPOSAL FOR SPECIMEN INSURANCE CERT.

CLARIFICATIONS:

1. Contractor to provide monthly progress payments for all completed work in accordance with the bid pricing schedule. Monthly progress payments must be received in full by Super Seal & Stripe no later than 10 calendar days after the Contractor receives payment from Owner for our completed work. Delinquent payments will be subject to the highest interest rate allowed by law.
2. Retainage percentage on monthly progress payments to be no greater than the percentage retained by the Owner on its payment to the Contractor. If Owner reduces the retainage percentages on payments to the Contractor, the Contractor shall likewise reduce the retainage percentage on payment to Super Seal & Stripe. Full retention to be released no later than thirty, (30) days after completion of Super Seal & Stripe's work. Excessive or deliquent retainage will be subject to the highest interest rate allowed by law.
3. Any required Testing, Engineering, Design, Permits, Licenses or Applications, and the like, to be provided by others.
4. Prices are based on Plans & Specifications available at bid time, including all addenda. Any request for work (post bid) under conditions differing from those represented by the Prime Contract Documents, including but not limited to; altered phasing or staging, design changes, modified layout, resulting from plan errors or inaccurate designs, will require payment for additional work to be made to Super Seal & Stripe at an amount agreed upon prior to performing this work. If an amount cannot be agreed upon prior to performing the additional work the amount will be determined using Caltrans Force Account Rates or unit prices established in the bid pricing schedule, or a combination thereof; established in the bid pricing schedule, or a combination thereof; whichever method results in a higher overall payment.
5. Super Seal & Stripe is not responsible for delays caused by and or resulting from activities or non activities of others, including but not limited to, Owner, Contractor, Vendors, Suppliers, other subcontractors and other factors not in direct control of Super Seal & Stripe. For the delays caused by the aforementioned, Super Seal & Stripe will be reimbursed for all direct and indirect costs plus a mark up of forty percent, (40%) or as specified and allowed by the Prime Contract if the delays are caused by the Owner. Super Seal & Stripe will be granted an extension of time to perform its work tantamount to the delays.
6. Super Seal & Stripe requires (15) days notice prior to commencement of any production activity. If any of Super Seal & Stripe's work will be a controlling operation on the critical path of this project, Super Seal & Stripe must be notified in writing prior to execution of the Subcontract Agreement and provided with a CPM schedule which details this work. Failure to provide this information will waive the Contractor's right to recover liquidated damages from Super Seal & Stripe for this work.
7. All changes to the original scope of work proposed extra work must be directed by the Contractor in writing prior to Super Seal & Stripe performing this work.
8. For the purpose of this Subcontract Quotation one (1) move-in is considered to be: a period of consecutive eight (8) hour days of continuous work, not including weekends and holidays. Any discontinuities in this period, other than weekends and holidays, or for our own convenience, will be charged as an additional move-in at the Additional Move-in Charge as quoted herein.
9. Super Seal & Stripe must receive a letter of intent to award us the subcontract no later than (20) calendar days after bid date or this Subcontract Quotation becomes null and void.
10. Super Seal & Stripe is an Equal Opportunity and Affirmative Action employer, that adheres to laws & regulations of Executive order 11246 Sec. 503 as amended of Rehabilitation action 1973 as amended and 4211 (USC) Vietnam Veterans readjustment as amended.
11. If General Contractor or any of its sub-contractors work within Super Seal & Stripes traffic control, the expense will be shared accordinly at Super Seal & Stripe discretion. No advance posting, signing, or Portable CMS is included for Super Seal & Stripe Traffic Control.
12. Pre-Striping pavement preparation, including sweeping & curing compound removals, to be provided by others.
13. Any additional work in excess of the quantities price will be billed at the units. No discounts given for under-runs without prior approval of Super Seal & Stripe.
14. Upon acceptance of this proposal, all terms, conditions and exclusions on all pages of this proposal shall be incorporated into the contract as an addendum.

THIS PROPOSAL EXCLUDES BOND COSTS.

ACORD®

CERTIFICATE OF LIABILITY INSURANCE

THIS CERTIFICATE IS ISSUED AS A MATTER OF INFORMATION ONLY AND CONFERS NO RIGHTS UPON THE CERTIFICATE HOLDER. THIS CERTIFICATE DOES NOT AFFIRMATIVELY OR NEGATIVELY AMEND, EXTEND OR ALTER THE COVERAGE AFFORDED BY THE POLICIES BELOW. THIS CERTIFICATE OF INSURANCE DOES NOT CONSTITUTE A CONTRACT BETWEEN THE ISSUING INSURER(S), AUTHORIZED REPRESENTATIVE OR PRODUCER, AND THE CERTIFICATE HOLDER.

IMPORTANT: If the certificate holder is an ADDITIONAL INSURED, the policy(ies) must be endorsed. If SUBROGATION IS WAIVED, subject to the terms and conditions of the policy, certain policies may require an endorsement. A statement on this certificate does not confer rights to the certificate holder in lieu of such endorsement(s).

PRODUCER	CONTACT NAME: Elena Amaro
Tolman & Wiker Insurance Services LLC #0E52073 196 S. Fir Street PO Box 1388 Ventura CA 93002-1388	PHONE (A/C, No, Ext): (805) 585-6736 FAX (A/C, No): (805) 585-6836 E-MAIL ADDRESS: eamaro@tolmanandwiker.com

INSURER(S) AFFORDING COVERAGE	NAIC #
INSURER A: Travelers Indemnity Co of CT	25682
INSURER B: Travelers Prop Cas Co of Amer	025674
INSURER C:	
INSURER D:	
INSURER E:	
INSURER F:	

INSURED
Super Seal & Stripe, Inc
P.O. Box 755
Fillmore CA 93016

COVERAGES **CERTIFICATE NUMBER:14/15 GL/AU/UMB/WC -** **REVISION NUMBER:**

THIS IS TO CERTIFY THAT THE POLICIES OF INSURANCE LISTED BELOW HAVE BEEN ISSUED TO THE INSURED NAMED ABOVE FOR THE POLICY PERIOD INDICATED. NOTWITHSTANDING ANY REQUIREMENT, TERM OR CONDITION OF ANY CONTRACT OR OTHER DOCUMENT WITH RESPECT TO WHICH THIS CERTIFICATE MAY BE ISSUED OR MAY PERTAIN, THE INSURANCE AFFORDED BY THE POLICIES DESCRIBED HEREIN IS SUBJECT TO ALL THE TERMS, EXCLUSIONS AND CONDITIONS OF SUCH POLICIES. LIMITS SHOWN MAY HAVE BEEN REDUCED BY PAID CLAIMS.

INSR LTR	TYPE OF INSURANCE	ADDL INSR	SUBR WVD	POLICY NUMBER	POLICY EFF (MM/DD/YYYY)	POLICY EXP (MM/DD/YYYY)	LIMITS	
A	GENERAL LIABILITY [X] COMMERCIAL GENERAL LIABILITY [ ] CLAIMS-MADE [X] OCCUR GEN'L AGGREGATE LIMIT APPLIES PER: [ ] POLICY [X] PRO-JECT [ ] LOC			DT22-CO-9324B327-TCT-14 Excludes all Wrap/OCIP Projects	3/1/2014	3/1/2015	EACH OCCURRENCE DAMAGE TO RENTED PREMISES (Ea occurrence) MED EXP (Any one person) PERSONAL & ADV INJURY GENERAL AGGREGATE PRODUCTS - COMP/OP AGG	$ 1,000,000 $ 300,000 $ 5,000 $ 1,000,000 $ 2,000,000 $ 2,000,000
A	AUTOMOBILE LIABILITY [X] ANY AUTO [ ] ALL OWNED AUTOS [ ] SCHEDULED AUTOS [X] HIRED AUTOS [X] NON-OWNED AUTOS			DT-810-9324B327-TCT-14	3/1/2014	3/1/2015	COMBINED SINGLE LIMIT (Ea accident) BODILY INJURY (Per person) BODILY INJURY (Per accident) PROPERTY DAMAGE (Per accident) Medical payments	$ 1,000,000 $ $ $ $
B	[X] UMBRELLA LIAB [X] OCCUR [ ] EXCESS LIAB [ ] CLAIMS-MADE [ ] DED [ ] RETENTION $			DTSM-CUP-9324B327-TIL-14	3/1/2014	3/1/2015	EACH OCCURRENCE AGGREGATE	$ 1,000,000 $ 1,000,000 $
B	WORKERS COMPENSATION AND EMPLOYERS' LIABILITY ANY PROPRIETOR/PARTNER/EXECUTIVE OFFICER/MEMBER EXCLUDED? (Mandatory in NH) Y/N [ ] If yes, describe under DESCRIPTION OF OPERATIONS below	N/A		DTJUB-9324B315-14	1/1/2014	1/1/2015	[X] WC STATU-TORY LIMITS [ ] OTH-ER E.L. EACH ACCIDENT E.L. DISEASE - EA EMPLOYEE E.L. DISEASE - POLICY LIMIT	$ 1,000,000 $ 1,000,000 $ 1,000,000

DESCRIPTION OF OPERATIONS / LOCATIONS / VEHICLES (Attach ACORD 101, Additional Remarks Schedule, if more space is required)
GL: CGD3910307 - Exclusion - All Projects Subject to a Wrap-Up Insurance Program with Limited Exceptions for Certain Ongoing Operations; CGD2460805 - Blanket Additional Insured (Contractors) (Primary); CGD3610305 - Additional Insured - Owners, Lessees or Contractors - Scheduled Person or Organization; CGD3160704 - Contractos Xtend Endorsement (WOS); CGD2110104 - Designated Project(s) General Aggregate Limit
AUTO: CAT3530310 - Blanket A/I, Blanket WOS; CA00010310 - Primary
WC: WC990376A001 - Blanket WOS

CERTIFICATE HOLDER

SPECIMEN

CANCELLATION

SHOULD ANY OF THE ABOVE DESCRIBED POLICIES BE CANCELLED BEFORE THE EXPIRATION DATE THEREOF, NOTICE WILL BE DELIVERED IN ACCORDANCE WITH THE POLICY PROVISIONS.

AUTHORIZED REPRESENTATIVE
Mark Lyon/DEBBI

SPECIMEN

© 1988-2010 ACORD CORPORATION. All rights reserved.
The ACORD name and logo are registered marks of ACORD

Selected Vendors

TCG **Tully Consulting Group**

Quote Folder: WPCP WPCP

Client #	Bidite	Activity	Resour	Description	Quantity Unit	Plug Pric	Price	Extensio
13	130	130.10	4SWPP	PREPARE WPCP	1.00 LS	650.000	650.0000	650.00
Quoted Amount:								650.00
Plugged Amount:								
Vendor Total:						650.00		650.00
Vendor Minority Amount: DBE 100 %								650.00

TCG

Civil Engineering and Stormwater Solutions

Aug 26, 2014

RE: Proposal for WPCP for Caltrans 06-0M8204, bidding 8/27/14

Dear Prime Contractor,

Thank you for the opportunity to provide a proposal for this project. We provide civil engineering and stormwater management services.

Scope of Work:

A. Prepare Water Pollution Control Program (WPCP)

Prepare a Water Pollution Control Program (WPCP). The document will be prepared in accordance with State and local requirements. Water Pollution Control Drawings will be included. Exclusions: Required BMP's, monitoring, site inspection and testing will be the contractor's responsibility.

Fee:

The WPCP will be prepared for a Fixed Fee of the following, with fees billed monthly based upon percent completion:

A. Prepare WPCP $650 $ 650.00

Fees will be due within 30 days of client's receipt of invoice.

Timing and deliverables:

The WPCP will be provided within 1 week of receipt of authorization to proceed. The document will be provided in hard copy (4 copies) and electronic PDF format.

We appreciate the opportunity to present this proposal and if you have any questions please feel free to contact me at (707) 628-4219. If this proposal is acceptable, please sign below authorizing us to begin work and return via fax to (707) 471-0318.

Sincerely,

Robin Tully

Robin Tully, PE/QSD/QSP, President/Owner
License #: C64354

AUTHORIZATION TO PROCEED

Name: _____ Date: _____

DBE/WBE/UDBE #38300, Exp. 2/4/2015, SBE (Micro) #60919, Exp. 1/31/2016

TULLY CONSULTING GROUP
180 S. FIRST ST, SUITE 9 • DIXON, CA • 95620
PHONE: 707-693-1926 • FAX 707-471-0318
ROBIN@TULLYGROUP.COM

Selected Vendors

HARRIS **Harris Rebar**

Quote Folder: REBAR Rebar

Client #	Bidite	Activity	Resour	Description	Quantity	Unit	Plug Pric	Price	Extensio
62	620	620.10	4REBA	CONCRETE BARRIER TRA	75.00	LF	43.000	43.0000	3,225.00
64	640	640.10	4REBA	CONCRETE BARRIER (TY	770.00	LF	10.170	10.1700	7,830.90
65	650	650.10	4REBA	CONCRETE BARRIER (TY	1,010.00	LF	25.320	25.3200	25,573.20
68	680	680.10	4REBA	MODIFY RAMP METERING	1.00	LS	1,160.000	1,160.0000	1,160.00
Quoted Amount:									37,789.10
Plugged Amount:									

Vendor Total:	37,789.10	37,789.10

RQ

National Strength. Local Service.
Lic. #C50-695035

Harris Rebar Northern California Inc.

1384 N. Jackson Ave. Ph (559) 251-7363
Fresno, CA 93703 Fax (559) 251-0435

Proposal No: **45139**
Proposal Date: 9/3/2014

BID PROPOSAL

This proposal is valid for 30 days from date shown above.

SECTION I- GENERAL INFORMATION

Proposal to: **Bidding Contractors**
Attn: **Estimating Department**

Project Name: **06-0M8204 Barrier Rail**
Ref. No.:
Address: Fresno, CA

Drwgs Quoted: **Drawings Dated 7/13/14 (As Listed on Sheet 1)**

Specs: **Yes**

Addendums: **1, 2, 3, 4, 5**

SECTION II- SCOPE OF WORK

> **Reinforcing Steel Supplied F.O.B. Truck Jobsite - Drilled & Grouted Dowels**
> **Reinforcing Steel Supplied "Caged" F.O.B. Truck Jobsite - Light Pole Cages**
> **Remaining Reinforcing Steel Furnished & Installed**

SECTION III- PRICES

NOTE: Taxes are INCLUDED in prices shown.

Bid Item	Description	Qty	Unit	Unit Price	Total
62	Concrete Barrier Transition Connection	75	LF	$43.00	$3,225.00
64	Concrete Barrier (Type 60)	770	LF	$10.17	$7,830.90
65	Concrete Barrier (Type 60C)	1,010	LF	$25.32	$25,573.20
68	Modify Ramp Metering System				$1,160.00

Total Reinforcing Items= $37,789.10

Cost of Bonds are not included in above prices. If Bonds required, Bond Rate is..... **0.6%**

SECTION IV- SPECIAL CONDITIONS, EXCLUSIONS AND/OR CLAIRIFICATIONS FOR THIS PROJECT

1 Prices firm through **12/31/2014**, ADD **$0.04** /per pound for deliveries and/or installation scheduled starting **1/1/2015**, ADD **$0.04** /per pound each six (6) months thereafter.

Harris Rebar Northern California Inc. *1384 N. Jackson Ave., Fresno, CA 93703 (559) 251-7363*

SECTION V- STANDARD EXCLUSIONS BY SELLER & FURNISHED BY BUYER

1 Approved properly manned equipment for hoisting or lowering of reinforcing materials or men as required by Harris Rebar Northern California Inc., including hoisting for unloading trucks, power placing of steel and assemblies, pre-tied walls and charging of vertical reinforcing.
2 Clear access roads & ramps for unloading of trailer/truck deliveries to within 50 feet of point of installation, and reasonable storage and lay-down areas.
3 Double handling costs, including costs to transport material from an unreasonably located area.
4 Sitework, Masonry, Mock Ups, Shotcrete Test Panels, MSE Walls, Electrical Duct Bank, Equipment Pads, Pipe Supports & Encasement and similar.
5 Supply & Installation of reinforcing for stair landings and treads.
6 Reinforcing for Anchor Points (and the Anchor Points) for Shotcrete
7 Reinforcing for precast and precast connections, prestressed and prestressing items
8 Trim reinforcing for openings, penetrations, and inserts not specifically located on Structural Drawings.
9 All welding and reforcing steel to be welded
10 Burning, cutting, or drilling of structural steel/miscellaneous iron to pass reinforcing steel.
11 Inserts, sleeves, rubalex, water stops, smooth dowels and /or dowel baskets, galvanized or epoxy coated dowels, threaded rebar, stud rails and placing of stud rails.
12 Covering, painting, galvanizing, epoxy coating, greasing or wrapping of reinforcing steel or smooth dowels.
13 Cleaning, cutting, straightening, locating or rework of existing reinforcing steel, reinforcing extending from piles, or precast
14 Cutting, drilling of holes, grouting, field bending or dry-packing of reinforcing steel.
15 Blocking, chairing, wrapping and/or pulling of welded wire fabric.
16 Metal rebar identification tags (Water & tear resistant plastic coated paper tags supplied)
17 Blocks, inspection tubes, wheels or spacers for clearances in drilled shafts or caissons.
18 Tie wire, accessories and field placing aids for F.O.B. materials.
19 Cost of Inspection, testing, bonds, permits, penalties or Liquidated Damages.
20 Test bars and test couplers (except those specifically called out in specs)
21 Rebar Safety Caps or devices for covering rebar ends.
22 Cleaning of tie wire clippings, tags and other spoils from work areas, cost of debris boxes and composite crew cleanup, except as mutually agreed.
23 Cleaning of reinforcing of grease, oil, dirt, and other bond weaking materials prior to concrete pour
24 Removal of staples and/or any other device used to hold placing aids to forms.
25 Protection and/or cleaning of others work
26 Firm, level, subgrade at elevation shown on drawings.
27 Lines, grades, steel racks, templates, scaffolding, safety rails, work platforms & ramps, stray current protection
28 Layout of TOW, TOF, EOW, expansion/construction joints, corners, doorways, blockouts and/or openings of any kind and Masonry Dowels.
29 Adequate power and lighting when necessary.
30 Cost of reworking or replacing reinforcing steel damaged or lost due to flood, actions of buyer, other subcontractors or other acts of God.
31 All dead men, cables, labor and engineering of system for guying of rebar, if required.
32 BIM (Building Information Modeling) - Available Upon Request
33 Design Engineering, Engineer stamping of drawings, Field Measurements and As-Built drawings.
34 Separate Pour Watchman, Fire Watchman, Safety Manager, QC Mgr, Traffic Control, Onsite Security
35 Dust control, street sweeping, erosion control, cleaning of equipment prior to exiting jobsite
36 Parking area and/or cost of parking for field crews, area for jobsite office including utility hookup, sanitary facilities, and jobsite access to drinking water
37 Third party invoice processing fees or enrollment in third party invoicing services

SECTION VI- TERMS AND CONDITIONS

1 **Terms of Sale:** Payment Terms – Subject to on-going credit approval: Net 30 days from date of invoice. Interest will be charged on all past due balances per the maximum rate allowed by law. Legal fees and costs will be paid as awarded to the prevailing party in the event of a legal dispute. Seller reserves the right to stop Work or demand security as required. Buyer agrees to pay Seller in accordance with the escalation policy as specifically identified in this proposal. "Work" is hereby defined as the performance of all work as listed above and included in any accepted Agreement, plus any changes, acceleration/out of sequence work, damages, escalation and costs incurred for the cause or benefit of Buyer or others.

2 **Acceptance:** Prices of individual bid items are subject to renegotiation if Buyer elects not to accept this complete proposal as presented. If Seller is requested to proceed with the work prior to the execution of a mutually agreed Contract, or if the work is completed prior thereto, the Terms and Conditions herein shall govern pending said Agreement. No assignment of this proposal shall be made without our prior written consent. We reserve the right to sublet portions of our Work.

3 **Schedule:** Seller's price is based upon detailing, fabrication, and placing on a normal 5-day, Monday to Friday, 40 hour work week, daylight hours unless explicitly noted on the face hereof. Performance will be based on bid documents as provided for tender and industry standards/CRSI. Schedule and schedule changes to be mutually agreed. Buyer to provide Seller (48) hours' notice of cancellation or modifications to schedule deliveries, Buyer agrees to provide adequate notice for workmen required at the jobsite and sufficient work for at least one full shift. Detailing submittals will be sequenced in a manner appropriate to the construction schedule. Working schedules to be made by mutual agreement of the Contractor and Subcontractor to conform to Contractor's master schedule. In event duration times are provided by Subcontractor, it is agreed that time starts only when work areas are provided ready to receive installation in all respects, in accordance with OSHA and State safety regulations.

4 **Back Charges/Shipping Discrepancies:** No charges for labor or materials furnished by the Buyer shall be allowed as a credit unless authorized in writing by Seller within ten (10) days of said occurrence. After a twenty four (24) hour period, all loads will be assumed to be verified.

5 **Safety:** Buyer will provide at no cost to Seller, general jobsite conditions conforming to OSHA standards and local governing authorities, including, but not limited to, adequate protection to ensure the safety of those working above reinforced steel as required, furnishing and installation of rebar safety caps or other OSHA compliant impalement hazard protection as required; Detection off/protection from underground and other utilities; Safe access, signage and other required warnings, flagging, barriers/barricades, general site and task lighting as required; Shoring, fall-protection anchorage points, walkways, approved scaffolding and staging in place as required, trenches, rails, snow and ice removal, all weather truck access; safe access to points of storage and work, etc. all as required.

6 **Insurance:** General Liability insurance will be provided solely for work performed by Seller and/or its engaged parties. Seller is not providing insurance for any liabilities that exceed Seller's responsibilities and/or liabilities. Additional Insured Endorsements may limit liabilities to those assumed under the Agreement and exclude Professional Liabilities. XCU, subsidence, Professional Liability, Aircraft, Pollution Liability and mold coverage are excluded as not applicable to this trade. A broad coverage manuscript policy is provided in lieu of ISO descriptions and forms. Additional coverage or alternate requirements not set forth herein and mutually agreed are subject to availability and any additional costs. Self-insured limits must be accepted as provided and any related security substitution requirements waived. Seller excludes: Builders Risk Insurance and return receipt requested notices for all certificates of insurance. Compliance requirements for any hired sub-subcontractors are subject to availability.

7 **Project/Owner Information:** Contractor agrees to provide Subcontractor with any pertinent Project/Owner information, as reasonably requested.

Harris Rebar Northern California Inc. *1384 N. Jackson Ave., Fresno, CA 93703 (559) 251-7363*

SECTION VII- CONDITIONS OF SALE EXCLUDED:

1 Pay if paid or "Pay when paid" conditions precedent for all properly completed work, including base scope of work, changes, acceleration/out of sequence work, damages, escalation and costs incurred for the cause or benefit of Buyer or others("Work"); Retention exceeding the rate withheld by Owner; Retention on F.O.B. items.

2 Indemnification, claim, and defense liabilities, responsibilities or damages exceeding any proportionate extent of cause by Seller's active negligence or willful misconduct.

3 Minority, DBE, DVBE, SBE, WBE and other special hiring status content, affiliation, or contribution to such requirements.

4 Risk, liabilities and responsibilities arising from existing conditions and preceding work exceeding visual inspection, including, but not limited to, field measurements, surveying, layout, forming and materials supplied by others; Costs arising from differing conditions and/or requirements from plans or drawings or bar lists provided for performance.

5 Design engineering and related Professional Liabilities and responsibilities: Costs and damages due to varying conditions and requirements.

6 Waiving any rights of dispute or redress; Costs/risks of claims against Owner for undisputed portions of our Work.

7 Forms and information requirements not mutually agreed; Unconditional forms of release in advance of receipt of funds; Releases that fail to exclude pending changes, unpaid balances, and retention as applicable; Releases for claims unrelated to payment for work performed: Non-conforming forms of waivers and releases within States that provide Statutory release language.

8 Reports, waivers, and other forms and contractual obligations related to bulk suppliers to our inventory stock who do not have lien rights.

9 Warranties exceeding Seller's scope of responsibilities or one (1) year; Guaranties of work performed by others; any forms of warranties, express or implied, of merchantability or fitness for purposes intended.

10 Risks and responsibilities for equipment and/or employees of Buyer or others providing services, or manning equipment used in connection with, but not within, Seller's scope of Work.

11 Liquidated and delay damages exceeding actual damages incurred, our scope of responsibility and/or our proportionate extent of cause, and for Force Majeure; Property damage, remedial work and/or replacement of Work and the work of others to the extent made necessary by others or Force Majeure.

12 Increased labor and material costs and/or damage in the event of project suspension or delay.

13 General Liability credits for any wrap-up insurance programs.

14 Prime contract terms, conditions, and scope in addition to, and/or in conflict with, a mutually agreed contract and Seller's scope of work and responsibilities as described herein.

15 Reports, submittals and data requirements not applicable to our trade, reasonably required or mutually agreed; Releases of proprietary or other confidential information and records as governed by the U.S. Security and Exchange Commission rules for a publically traded company.

16 Any portion of fines or penalties exceeding the extent of cause by Seller; Any increased, surcharged or escalated portion of fines incurred by Buyer.

17 Enrollment/contributions to unions to which Subcontractor is not signatory; compliance with any additional or conflicting term, condition, or rate of pay, etc. between Seller's labor agreement and others affiliated with the Project.

18 Guarantors.

19 Site security.

SECTION VIII- ACCEPTANCE

The above proposal including all attached and referenced documents shall constitute a contract or shall be part of a contract is subject to on-going credit approval. Prices shown are for the complete project and NO single item price or group of prices are valid alone without the consent of the Seller. We reserve the right to modify/negotiate amendments to any Contractor Issued forms of Agreement, as required to properly describe scope of work, pricing and mutually agreed terms and conditions.

Buyer: _____

By: _____

Title: _____

Date: _____

Seller: **Harris Rebar Northern California Inc.**

By: _____
Nick Williams

Title: Operations Manager

Date: _____

Selected Vendors

WABO **Wabo Landscape**

Quote Folder: LANDSCAPE Landscape

Client #	Bidite	Activity	Resour	Description	Quantity	Unit	Plug Pric	Price	Extensio
30	300	30.10	4LAND	PRUNE EXISTING PLANTS	1.00	LS	5,580.000	5,580.0000	5,580.00
31	310	350.10	4LAND	MAINTAI EXISTING PLANT	1.00	LS	8,000.000	8,000.0000	8,000.00
32	320	320.10	4LAND	WOOD MULCH	670.00	CY	35.000	35.0000	23,450.00
33	330	33.10	4LAND	CHECK/TEST EXIST. IRRI	1.00	LS	8,500.000	8,500.0000	8,500.00
34	340	34.1	4LAND	OPERATE EXIST. IRRIGAT	1.00	LS	8,500.000	8,500.0000	8,500.00
35	350	350.10	4LAND	3" PLASTIC PIPE, (CL 315 (	60.00	LF	25.000	25.0000	1,500.00
36	360	360.10	4LAND	10" WELDED STEEL PIPE	50.00	LF	150.000	150.0000	7,500.00
72	720	720.05	4LAND	MOBILIZATION	0.01	LS	7,500.000	7,500.0000	75.00
Quoted Amount:									63,105.00
Plugged Amount:									
Vendor Total:							63,105.00		63,105.00

RDO

WaboBIDfax06-0M8204.xlsx **BID FAX** 09/03/2014

WABO Landscape & Construction, Inc.
726 ALFRED NOBEL DR. HERCULES, CA 94547 LIC. 962263 A, B, & C27
(510) 741-9226 FAX (510) 724-2391 bids@wabo.com

SUB-BID SUBMITTAL Bids: 03-Sep-14
Rt. 41,180 Fresno Co. Widen Shoulder And Construct Concrete Barrier
Contract No. 06-0M8204
06-Fre-41,180-Var

Item	Item Code	Item	Unit Of Measure	Estimated Quantity	Unit Price (In Figures)	Total (In Figures)
30	200052	PRUNE EXISTING PLANTS	LS	LUMP SUM	LUMP SUM	5,580.00
31	204096	MAINTAIN EXISTING PLANTED AREAS	LS	LUMP SUM	LUMP SUM	8,000.00
32	205035	WOOD MULCH	CY	670	35.00	23,450.00
33	206400	CHECK AND TEST EXISTING IRRIGATION	LS	LUMP SUM	LUMP SUM	8,500.00
34	206402	OPERATE EXISTING IRRIGATION FACILITI	LS	LUMP SUM	LUMP SUM	8,500.00
35	208607	3" PLASTIC PIPE (CLASS 315) (SUPPLY LIN	LF	60	25.00	1,500.00
36	208820	10" WELDED STEEL PIPE CONDUIT	LF	50	150.00	7,500.00
72	999990	MOBILIZATION (Our Share)	LS	LUMP SUM	LUMP SUM	7,500.00

TOTAL BID 70,530.00

Items above must be taken as 1 package. No splitting of bid. Please call if you want to split any items

EXCLUSIONS, QUALIFICATIONS, & CONDITIONS

1 Percent retained from our payments to equal General Contractor's percent retained by owner.
2 WABO needs 20 Working Days for Construction
3 Bid includes maintain existing irrigation & planting costs for the contract working day limit ONLY.
4 Additional maintenance costs due to contract extension or suspension or delays are excluded.
5 Lane &/or ramp closures to be done when Gen. has lanes or ramps closed, otherwise closures by others.
6 No pavement removal or replacement. No sawcutting, No patching, No temporary paving.
7 No clearing, grubbing, or tree or plant removal is included. No tree or plant protection.
8 Grades and/or subgrades to ±0.1' by others.
9 No soil removal, no import soil, no hazardous materials handling or removal.
10 No erosion control or maintenance of erosion control items.
11 Repair of existing landscape or irrigation damaged by others, is not included.
12 No hand or truck watering due to disruption of water supply beyond our control.
13 No surveying, No arborist.
14 We are signatory with the Laborers, Operators, and Plumbers Unions. We shall determine which union to dispatch crews from for our work as long as the jurisdiction & scope are incorporated into the selected unions agreement.
15 No bond is included with bid. WABO bond rate is 0.6%.
16 No insurance requirements beyond what is required by Caltrans Standard specs.
17 Maximum of 5,000,000 excess umbrella. No railroad requirements. No Builders Risk.
18 We must be notified in writing within 5 working days of damage to work of others by our forces.
19 There shall be no repairs of damage to work of others at our expense without prior written approval.
20 This proposal shall be included as an attachment to the subcontract.
21 Certified as small business, State of California DGS, # 1731785, expires: 10/31/14
22 5 addenda noted
23 All Items must be taken as 1 package. No splitting of bid.
24 Please call if you want to split any items

If items are not legible or you have any questions please call or FAX us.
Steve Gladden 510-741-9226 ext.130

Selected Vendors

MADCO **Madco Electric**

Quote Folder: ELECTRIC ELECTRIC

Client #	Bidite	Activity	Resour	Description	Quantity Unit	Plug Pric	Price	Extensio
67	670	670.10	4ELEC	MAINTAIN EXIST TRAFFIC	1.00 LS	1.000	1.0000	1.00
68	680	680.10	4ELEC	MODIFY RAMP METERING	1.00 LS	30,000.000	30,000.0000	30,000.00
69	690	690.10	4ELEC	MODIFY LIGHTING	1.00 LS	80,000.000	80,000.0000	80,000.00
72	720	720.30	4ELEC	MOBILIZATION	1.00 LS	10,000.000	10,000.0000	10,000.00
Quoted Amount:								120,001.00
Plugged Amount:								

Vendor Total:	120,001.00	120,001.00

$ 120,000.00

Madco Electric, Inc.

Fax Transmission

Lic. #749098
SBE#61748

From: Michael Merigian

To: Estimating Dept.

Company:

Date: 9/3/14

RE: 06-0M8204

EXCLUSIONS: Bonds, Permits, Utility Fees, Surveying, Traffic Control, Testing, Demo

Bond Rate: [.0078] Less than one percent. Madco Electric, Inc. to be paid upon completion of their work.

Fax: (559)886-4518
Phone: (559)886-5637

madco8812@gmail.com
Signatory to Laborers Union
Equal Opportunity Employer
Electrical Open Merit Shop
Member ABC

2135 E. Front St
Selma, Ca. 93662

Item No.	Item Code	Item Description	Unit of Measure	Estimated Quantity
61	027617	CONCRETE BARRIER MARKERS	EA	25
62	027618	CONCRETE BARRIER TRANSITION CONNECTION	LF	75
63	027619	ALTERNATIVE CRASH CUSHION SYSTEM	EA	5
64	839701	CONCRETE BARRIER (TYPE 60)	LF	770
65	839703	CONCRETE BARRIER (TYPE 60C)	LF	1,010
66	840515	THERMOPLASTIC PAVEMENT MARKING	SQFT	170
67	860090	MAINTAINING EXISTING TRAFFIC MANAGEMENT SYSTEM ELEMENTS DURING CONSTRUCTION	LS	LUMP SUM
68	861088	MODIFY RAMP METERING SYSTEM	LS 30,000.00	LUMP SUM
69	861503	MODIFY LIGHTING	LS 80,000	LUMP SUM
70	999990	MOBILIZATION	LS 10,000	LUMP SUM

$120,000.00

Selected Vendors

MIRANDA **Clay Miranda Trucking**

Quote Folder: TRUCKING Trucking

Client #	Biditem	Activity	Resourc	Description	Quantity	Unit	Price	Extension
27	270	270.20	5005	CLEARING AND GRUBBING (	8.00	HRS	100.0000	800.00
29	290	290.10	51	IMPORTED BORROW (CY)	15.00	HRS	95.0000	1,425.00
41	410	410.10	5004	CLASS 2 AGG BASE (CY)	24.00	HRS	95.0000	2,280.00
42	420	420.10	5301T	MINOR HMA	44.00	HRS	95.0000	4,180.00
56	560	560.10	5004	ROCK SLOPE PROTECTION (	3.00	HRS	95.0000	285.00
Quoted Amount:								8,970.00
Plugged Amount:								

Vendor Total:	8,970.00
Vendor Minority Amount: DBE 60 %	5,382.00

CLAY MIRANDA TRUCKING, INC.

Mailing Address:
P.O. Box 11983
Fresno, Ca. 93776-1983

Bus: (559) 275-6250
Fax: (559) 275-6091
SMBE & WBE

Truck Yard:
3220 W. Belmont
Fresno, Ca. 93722

FAX COVER SHEET

DATE: 9-4-14

DESTINATION: EMMETT'S

ATTN: ESTIMATOR RYAN

FROM: MIKE MIRANDA

TOTAL PAGES INCLUDING COVER SHEET: 2

Comments: 41 - 180

NOTE: If there are any pages missing, or if you have any questions regarding this transmittal, please call **(559) 275-6250.**

Clay Miranda Trucking, Inc.
DBE & WBE
3220 W. BELMONT AVE.
FRESNO, CA. 93722
BUS:(559) 275-6250
FAX: (559) 275-6091

Project:	DOT Widen Shoulder And Construct Concrete Barrier
Contract :	06-Fre-41, 180-Var
Loc:	Various
	Bid Date: 9-3-14

Add 5% Increase On All Truck Hauls

0-0-0

All Single Loads Are Hourly.

STAND-BY AFTER

SPRS. & BTMS.	10 MIN.
TRANSFERS	30 MIN.
ROCK PLANT	10 MIN.
HOT PLANT	10 MIN.

ALL BIDS ARE BASED ON AMERICAN TONS
MINIMUM 25.00 TON LOADS

(Price is based on fuel cost not exceeding $ 4.00 per gal. For every .25 increase in fuel cost, add 2.5 % to quote.)

POINT OF ORIGIN	MATERIAL	Hourly Rate	BOTTOMS	SUPERS	TRANSFERS	SEMI ENDS	DELIVERY AREA
Various	AC/AB		95.00	95.00	95.00	100.00	Various

BY: Mike Miranda

DATE:

CALIFORNIA UNIFIED CERTIFICATION PROGRAM
DISADVANTAGED BUSINESS ENTERPRISE CERTIFICATE

CLAY MIRANDA TRUCKING, INC.

3220 W. BELMONT
FRESNO, CA 93722

Owner: DEBORA COOPER

Business Structure: CORPORATION

This certificate acknowledges that said firm is approved by the California Unified Certification Program (CUCP) as a Disadvantaged Business Enterprise (DBE) as defined by the U.S. Department of Transportation (DOT) CFR 49 Part 26, as may be amended, for the following NAICS codes:

NAICS Code(s) * Indicates primary NAICS code

* 484110 General Freight Trucking, Local
484220 Specialized Freight (except Used Goods) Trucking, Local
423320 Brick, Stone, and Related Construction Material Merchant Wholesaler

Work Category Code(s)

C0625	SAND & GRAVEL	C9602	BOTTOM DUMP TRUCKING
C9605	FLAT BED TRUCKING	C9670	TRUCK RENTAL
C9771	TRUCK BROKER	C9774	TRUCKER

Licenses

CERTIFYING AGENCY:
CITY OF FRESNO
2101 G STREET, BUILDING A
FRESNO, CA 93706 0000
(559) 621-1182

UCP Firm Number : 5568

Beth McDonald
CUCP OFFICER

February 7, 2011

Selected Vendors

Minority Totals by Type

Type	Description	Current	Goal	Diff
DBE	Disadvantaged Business Enterprise	$150,245.20	$129,388.43	$20,856.76
		16.26 %	14.00 %	2.26 %
DVB	Disabled Veteran Busines Enterprise	$0.00	$0.00	$0.00
		0.00 %	0.00 %	0.00 %
MBE	Minority Business Enterprise	$0.00	$0.00	$0.00
		0.00 %	0.00 %	0.00 %
UDB	Underutilized DBE	$0.00	$0.00	$0.00
		0.00 %	0.00 %	0.00 %
WBE	Women Owned Business	$0.00	$0.00	$0.00
		0.00 %	0.00 %	0.00 %
		$150,245.20	**$129,388.43**	**$20,856.76**
		16.26 %	**14.00 %**	**2.26 %**

CMG Hydroseeding, Inc.

BID

4460 W. Shaw Ave. #146 Fresno, CA 93722
Phone: 559-217-4703
Fax: 559-276-5020
BUSINESS LIC # 148657
CONTRACTOR LIC # 975046

DATE: 8/5/2014

Project: Caltrans 06-0M8204

Hydroseeding/Erosion Control

Bid Item #	Description	Measurement	Rate	Total
15	Temp Silt Fence	1150 LF	5.2500	$6,037.50
37	Move In/Move Out	2 EA	800.0000	$1,600.00
38	Hydromulch	8520 SQFT	0.0950	$809.40
39	Straw	0.4 TON	1,200.0000	$1,200.00
40	Hydroseed	8520 SQFT	0.0950	$809.40
				$0.00
				$0.00
				$0.00
				$0.00
				$0.00
				$0.00
				$0.00
				$0.00
				$0.00
				$0.00
				$0.00
				$0.00
				$0.00
			TOTAL	**$10,456.30**

For Bidding Purpose Only Price Good For 30 Days

Notes:

** Pricing in bid is per unit. Final square footage is to be determined prior to hydroseeding.*

*** CMG Insurance covers: General Liability, Auto Liability, Workers Comp up to $1,000,000.00, & General Aggregate up to $2,000,000.00. Any additional insurance required by contractor or owner will be added to bid price.*

Thank You,

Brett Reinke
President

Adanta, Inc.
828 School Street
Napa, California 94559
Tel. (707) 709-8894
Fax (707) 736-8368

Native American woman-owned
California DOT-Certified DBE
DBE Certificate #37357

Adanta

July 30, 2014

Attn: Estimator **DBE Quote -**

Subject: **Caltrans Contract 06-0M8204**

PROPOSAL FOR: ***BID ITEM***
Item, LEAD COMPLIANCE PLAN **$1,275.00**

Dear Estimator:

Adanta is pleased to present this bid to provide environmental services for the above referenced project. The Lead Compliance Plan will be prepared in accordance with Caltrans' Notice to Bidders and Special Provisions for this project. The LCP will address these concerns to protect workers and ensure proper handling of lead-containing materials, and will contain the elements listed in Title 8, California Code of Regulations, Section 1532.1(e)(2)(B). The LCP will be prepared, signed and stamped by an Industrial Hygienist certified in Comprehensive Practice by the American Board of Industrial Hygiene. Quotes for air monitoring and lead awareness training upon request.
If you have any questions, please feel free to contact us at (707) 709-8894.

Sincerely,

Kimberly Patz

Kimberly Patz, President (kimberlypatz@adanta-inc.com)

Adanta Inc.

Phone: 707-709-8894
Fax: 707-736-8368

Fax

To: Emmett's Excavation	From: Kimberly Patz
Fax: 5593489272	Pages: 2
Re: Caltrans 06-0M8204	Date: July 30, 2014

DBE Quote - Lead Compliance Plan

HIGHTAIL

Log In Free Trial Sign Up

Certification152.pdf

Expires in [illegible]

Download

Nancy Espie-Underwood

QUOTES FOR PROJECT # 06-0M8204 LCP & SWPPP

LCP $625.
SWPPP $1319.

SDBE CERT ATTACHED

59.7 KB Adobe Acrobat Document

Get them all.

Just got a bunch of files?
Learn how to quickly download them all.

Language English ▼

About Us
Careers
Press
News

Blog
Support
Partnerships
Solutions

Terms of Service
Privacy Policy
Cookie Policy
Copyright
Site map

Contact Sales 1 (866) 558-7363
Contact Support 1 (888) 535-9442

P.S. You look great today.

Facebook
Twitter
LinkedIn
Vimeo
Google+

© Hightail Inc. 2014

1919 S. Bascom Avenue
Campbell, CA 95008
United States of America

(6)

CALIFORNIA UNIFIED CERTIFICATION PROGRAM (CUCP)

June 29, 2010

Ms. Nancy Espie-Underwood
UGE & ECS, Inc
550 N. Figueroa St. Unit 6036
Los Angeles, CA 90012

RE: DISADVANTAGED/MINORITY/WOMEN BUSINESS ENTERPRISE (DBE/MBE/WBE) RECERTIFICATION APPROVAL File No. - 163 - 32609

Dear Ms. Espie-Underwood:

We are pleased to advise you that after careful review of your application and supporting documentation, the City of Los Angeles has determined that your firm meets the eligibility standards to be recertified as a **Disadvantaged/Minority/Women Business Enterprise (DBE/MBE/WBE)** as required under the U.S. Department of Transportation (U.S. DOT) Regulation 49 CFR Part 26, as amended.

Your firm will be listed in the California Unified Certification Program (CUCP) database of certified DBEs and the City of Los Angeles DBE/MBE/WBE directory under the following specific area(s) of expertise that you have identified on the business service form for contracting opportunities:

NAICS Code	Description
541330	**Engineering Services**
541620	**Environmental Consulting Services**
541690	**Other Scientific and Technical Consulting Services**
562910	**Remediation Services**

Your DBE certification is good for five years from the date of this letter and applies only for the above codes. You may review your firm's information in the CUCP DBE database, which can be accessed at the California Department of Transportation's website at www.dot.ca.gov/hq/bep/ and the City of Los Angeles DBE/MBE/WBE database at http://bca.lacity.org. Any additions and revisions must be submitted to the City of Los Angeles for review and approval.

After the five-year certification period, your entire file will be reviewed in order to ascertain continued DBE certification status. You will be notified of the pending DBE status review and any documentation update necessary prior to the expiration date.

The Regulations also require annual updates during this five-year period. In order to assure continuing DBE status, you must submit annually a DBE Declaration with supporting documentation, in the format, which will be sent to you. Based on your annual submission that no change in ownership and control has occurred, or if changes have occurred, they do not affect your firm's DBE standing, the DBE certification of your firm will continue until the five-year certification has expired.

CALIFORNIA UNIFIED CERTIFICATION PROGRAM
DISADVANTAGED BUSINESS ENTERPRISE CERTIFICATE

UGE & ECS, INC.

550 N. FIGUEROA ST., UNIT 6036
LOS ANGELES, CA 90012

Owner: NANCY ESPIE-UNDERWOOD
Business Structure: CORPORATION

This certificate acknowledges that said firm is approved by the California Unified Certification Program (CUCP) as a Disadvantaged Business Enterprise (DBE) as defined by the U.S. Department of Transportation (DOT) CFR 49 Part 26, as may be amended, for the following NAICS codes:

NAICS Code(s) * Indicates primary NAICS code

* 541330 Engineering Services
541690 Other Scientific and Technical Consulting Services
562910 Remediation Services
541620 Environmental Consulting Services

Work Category Code(s)

C8700	CONSULTANT, NON ENGINEERING	C8851	Lead Compliance
C8852	SWPPP Planning	C9801	BUILDING CONSTRUCTION
C9903	CONSTRUCTION CLEAN UP		

Licenses

A General Engineering Contractor ASB Asbestos

CERTIFYING AGENCY:
CITY OF LOS ANGELES
1149 SOUTH BROADWAY STREET
LOS ANGELES, CA 90015 0000
(213) 847-1922

UCP Firm Number : 32609

CUCP OFFICER

April 8, 2013

VERIDICO GROUP, INC.

PROGRAM MANAGEMENT | ENVIRONMENTAL SERVICES | WATER RESOURCES ENGINEERING

DBE Contractor – CUCP Certificate Number 39572

Date: 25 AUG 14 (REVISED 2 SEPT 14)

Contract #: 06-0M8204 – WIDEN SHOULDER AND CONSTRUCT CONCRETE BARRIER
Bid Date: 3 SEPT 2014

Veridico Group, Inc. (Veridico) is pleased to provide the following contract pricing for the specified work scope items detailed in the subject contract solicitation:

Item No.	Item code	Item Description	Unit of Measure	Est Qty	Bid	Amount
1	070030	LEAD COMPLIANCE PLAN (ADL)	LS	LS	$1,250.00	$1,250.00
1	070030	LEAD COMPLIANCE PLAN (PAINT STRIPES)	LS	LS	$1,250.00	$1,250.00
12	130100	JOB SITE MANAGEMENT (PARTIAL)	LS	LS	$9,730.00	$9,730.00
13	130200	PREPARE WATER POLLUTION CONTROL PROGRAM (PARTIAL – PLAN ONLY)	LS	LS	$595.00	$595.00
Total						**$12,825.00**

TERMS AND CONDITIONS:

1. This quote and attached terms and conditions must become a binding part of any sub-contract.
2. A contract and 10 working days notice must be given prior to start of work. This quote shall remain valid for 30 days from date of actual bid opening, unless otherwise agreed upon.
3. TERMS: Due and payable within 30 days from date of installation and/or as per Business and Professional code 7108.5 and Public contract code 10262.5 (for progress payments) and/or as per Public contract Code 7107 (for retention due).
4. All change orders must be approved by agency/owner prior to work being performed by Veridico.
5. Excludes any insurance requirements in excess of Caltrans Standard Specifications.
6. Offered bid item quotes **CAN BE SPLIT**.

P.O. Box 673, Roseville, California 95661
Phone: 707-317-0002, Fax: 707-620-7000
www.veridicogroup.com

ASSUMPTIONS

1. Job Site Management assumes a project duration of 70 days (field work), or 14 weeks of on-site field work. If the actual construction duration is less (or more), the Prime may multiply the number of field weeks by $695.00.

   14 weeks x $695.00/week = $9,730.00

   This is a weekly rate for Veridico to conduct a half-day per week site visit to document required WPCP compliance; Caltrans forms 2030 and 2034 completed by or under the direction of a QSD/P, and physical site inspection. Pre-, during and post-rain event site inspections are not included but will be billed at the Job Site Management rate if required. No other plans, reports, monitoring or permits are included.
2. Field monitoring may be required for the Lead Compliance Plan. A CIH can be provided to oversee the monitoring for **$1,950 per day** including all labor, travel, perdiem, materials, supplies, and lab costs. For bidding purposes, assume **TWO (2) dayS** for the lead monitoring; or a **total of $3,900.00** for the on-site monitoring.
3. The WPCP and the LCP are **guaranteed** acceptance for the quoted bid.
4. Contractor to provide completed questionnaire (supplied by Veridico upon notice of award) prior to start of work.
5. Print-ready electronic draft and final copies of plans and/or reports will be provided so hard copies can be produced; no hard copies will be provided by Veridico.

Veridico is a certified DBE contractor (No. 39572) with a number of associates that have supported Caltrans projects for many years. We have the necessary certified personnel to support your efforts on this project and we look forward to providing you our highest level of project support. Please don't hesitate to contact me directly at (707) 317-0002 or at tim.anenson@veridicogroup.com if we can provide anything further.

My Very Best Regards,
VERIDICO GROUP, INC.

Tim Anenson, QSD, CPSWQ
Principal Consultant

P.O. Box 673, Roseville, California 95661
Phone: 707-317-0002, Fax: 707-620-7000
www.veridicogroup.com

Alfred Civil Engineering

7604 Soquel Way

Citrus Heights, CA 95610

9/01/2014

DBE Certification # 41902

QSD/P Certification # 48604

==========

Subject: 06-0M8204: Widen Shoulder and Construct Concrete Barrier in Fresno County at Various Locations

Attn: Estimator

We have reviewed the plans and specifications for the above-referenced contract and submit for your consideration the following services:

Item No	Item Code	Item Description	Unit	Quantity	Unit Cost	Amount
12	130100	JOB SITE MANAGEMENT	LS	1	$5,600	$5,600

The scope includes the following activities by a QSD/P:

JOB SITE MANAGEMENT

Includes monitoring and inspection to control material pollution, waste and non-stormwater at the job site.

Includes providing a WPC manager; conducting water pollution control monitoring; inspecting and correcting water pollution control practices.

Scope does not include provision, transport, or installation of BMP materials.

If you have any questions or require additional information, please do not hesitate to contact us

Sincerely,

Bori A Touray

Bori A. Touray PE, QSD/QSP

touray@alfredce.com

Alfred Civil Engineering

(916) 241-5309

Alfred Civil Engineering

7604 Soquel Way

Citrus Heights, CA 95610

9/01/2014

DBE Certification # 41902

QSD/P Certification # 48604

==========

Subject: 06-0M8204: Widen Shoulder and Construct Concrete Barrier in Fresno County at Various Locations

Attn: Estimator

We have reviewed the plans and specifications for the above-referenced contract and submit for your consideration the following services:

Item No	Item Code	Item Description	Unit	Quantity	Unit Cost	Amount
13	130200	PREPARE WATER POLLUTION CONTROL PROGRAM	LS	1	$750	$750

The scope includes the following activities by a QSD/P:

PREPARE WATER POLLUTION CONTROL PROGRAM

Includes developing and amending the WPCP.

Scope does not include provision, transport, or installation of BMP materials.

If you have any questions or require additional information, please do not hesitate to contact us

Sincerely,

Bori A Touray

Bori A. Touray PE, QSD/QSP

touray@alfredce.com

Alfred Civil Engineering

(916) 241-5309

From: Bori Touray Fax: (916) 374-7383 To: Fax: +1 (559) 348-9272 Page 3 of 5 09/02/2014 11:01

Back To Query Form

Search Returned 1 Records

Tue Aug 26 16:48:33 PDT 2014

Query Criteria

Firm/DBA Name: Alfred civil engineering
Firm Type: DBE

Firm ID	41902
Firm/DBA Name	ALFRED CIVIL ENGINEERING
Address Line1	7604 SOQUEL WAY
Address Line2	
City	CITRUS HEIGHTS
State	CA
Zip Code1	95610
Zip Code2	
Mailing Address Line1	
Mailing Address Line2	
Mailing City	
Mailing State	
Mailing Zip Code1	
Mailing Zip Code2	
Certification Type	DBE
EMail	btouray@comcast.net
Contact Name	BORI A. TOURAY
Area Code	(916)
Phone Number	235-3967
Fax Area Code	( )
Fax Phone Number	
Agency Name	DEPARTMENT OF TRANSPORTATION
Counties	01; 02; 03; 04; 05; 06; 07; 08; 09; 10; 11; 12; 13; 14; 15; 16; 17; 18; 19; 20; 21; 22; 23; 24; 25; 26; 27; 28; 29; 30; 32; 33; 34; 35; 36; 37; 38; 39; 40; 41; 42; 43; 44; 45; 46; 47; 48; 49; 50; 51; 52; 53; 54; 55; 56; 57; 58;
Districts	01; 02; 03; 04; 05; 06; 07; 08; 09; 10; 11; 12;
DBE NAICS	541330; 541340; 541620; 541690;
ACDBE NAICS	
Work Codes	C8705 DESIGN; C8710 ENGINEERING; C8713 CONSULTANT, ENVIRONMENTAL; C8715 CONSULTANT, ENGINEERING; C8720 CIVIL ENGINEERING; C8722 ENVIRONMENTAL ENGINEER; C8765 DRAFTING; C8766 Computer-aided Design & DRAFTING (CADD); C8767 GIS Modeling; C8781 Engineering - Hydrology; C8794 Environmental - Water Quality; C8852 SWPPP Planning;
Licenses	EC Civil Engineer;
Trucks	
Gender	M

Ethnicity	BLACK
Firm Type	DBE

Back To Query Form

From: Bori Touray Fax: (916) 374-7383 To: Fax: +1 (559) 348-9272 Page 4 of 5 09/02/2014 11:01

Water Boards Storm Water Multiple Application & Report Tracking System

Help Logout

You are logged-in as: **Bori Touray - .**
If this account does not belong to you, please log out.

Navigate To:

User Account Details

This page allows you to enter or edit your user account details. Enter and edit the details as needed in the fields below and click on "Save" button to save the details. **Back to Main Menu**

User ID: btouraycomcastne

First Name: Bori *?

Middle Name: A ?

Last Name: Touray *?

Phone: 916-241-5309 (999-999-9999) Ext:

Title: Water Resources Enginee

Business Name: ALFRED CIVIL ENGINEE *

Business Address: (•) USA Address ( ) International Address

Street Address: 7604 Soquel Way * (Enter PO Box addresses in the Street Address Field)

Address Line2:

City: Citrus Heights * **State:** CA * **Zip:** 95610 *

Save Cancel

Change Password Change Email Address Create New Organization

CBPELSG - QSD

Name	Address	Email	License No.	Certification No.	Edit
Bori Touray	7604 Soquel Way - Citrus heights - CA 95610	btouray@comcast.net	48604	C48604	Edit
Bori Touray	7604 Soquel Way - Citrus Heights - CA 95610	btouray@comcast.net	48604	C48604	Edit

Associated Organizations: The following are the organizations associated with your user account. In order to start a new / view existing Change of Information of an organization; Click on Start/View COI link of the corresponding organization.

Name	Address	Role	COI	Delink Organization	eAuthorization Form
ALFRED CIVIL ENGINEERING	7604 SOQUEL WAY CITRUS HEIGHTS CA 95610	Data Entry Person	Start/View COI	Delink	Print eAuthorization Form

Associated COIs for your organizations: Click on COI ID to view the corresponding Change of Information details.

COI ID	Organization Name	Submitter	COI Date	COI Status	Delete COI

© 2014 State of California. Conditions of Use Privacy Policy

FAX COVER SHEET

TO	
COMPANY	
FAX NUMBER	15593489272
FROM	Tim Mehta, PD; QSD
DATE	2014-08-18 17:56:14 GMT
RE	06-0M8204 WPCP BID PROPOSAL

COVER MESSAGE

ATTENTION: ESTIMATING ESWPPP CONSULTANTS, LLC, DBE CERTIFIED

DBE CERTIFICATION # 35275 902 CORTINA COURT WALNUT CREEK, CA 94598
PHONE
(925) 451 – 1337

FAX # (925) 956-7191 <%28925%29%20956-7191>

Email address: eswppp@hotmail.com <eswppp@hotmail.com>

August 18, 2014

BID OPEN DATE: 8/27/2014

CALTRANS CONTRACT: *06-0M8204 *

1. *PREPARE LEAD COMPLIANCE PLAN (PARTIAL, DOCUMENT ONLY):
$1190** *

2. *PREPARE **WATER POLLUTION CONTROL PLAN (WPCP-3 COPIES,
PARTIAL,
WPCP DOCUMENT ONLY): $699 Base price**

* NOTES:*

*WPCP will be prepared using the latest approved Caltrans template available at the time of the contract bid opening. Document only-does not include personnel training, inspection reports, amendments, annual cert., etc. Base price: includes preparing a WPCP document as per Contract specification, plans and bid item list. Any additions /revisions /changes /amendments to the WPCP which is not part of the original contract (including changes needed for obtaining approval of the WPCP and revisions needed because of wrong information) will be charged $75/hour.

** Document only, does not include personnel training; air monitoring or personnel protective equipments, etc.

*IF YOU HAVE ANY QUESTIONS, PLEASE CALL TIM MEHTA OF OUR STAFF AT (925)
451-1337 <%28925%29%20451-1337>.*

Tim Mehta

ESWPPP CONSULTANTS, LLC, DBE CERTIFIED

La Firma Inc.

DBE 39322

715 Ridge Road
Nipomo, CA .93444
Phone: 805-748-8576
Fax: 805-929-0501
E-Mail:
estimating@theswpppfirm.com
Web: www.theswpppfirm.com

September 2, 2014
Project: 06-0M8204
Widen Shoulder And Construct Concrete Barrier
06-Fre-41,180-Var

We are pleased to provide you with a bid for the item listed below based on plans, and specifications and (5) addendums.

Bid item.

Item	Code	Description	Unit	Quantity	Unit Price	Total
13	130200	Prepare Water Pollution Control Program.	LS	LS	$650.00	$650.00

Exclusions and qualifications.

1. Special testing and permits not in contract.
2. Price includes (1) electronic copy and (5) printed copies.

THANK YOU FOR YOUR TIME AND CONSIDERATION,

VICENTE BRAVO.
CPESC QSD/P #305

Back To Query Form

Search Returned 1 Records

Mon Jul 21 18:33:34 PDT 2014

Query Criteria

Firm/DBA Name: La Firma
Zip Code: 93444
Firm Type: DBE

Firm ID	39322
Firm/DBA Name	LA FIRMA INC.
Address Line1	715 RIDGE ROAD
Address Line2	
City	NIPOMO
State	CA
Zip Code1	93444
Zip Code2	
Mailing Address Line1	
Mailing Address Line2	
Mailing City	
Mailing State	
Mailing Zip Code1	
Mailing Zip Code2	
Certification Type	DBE
EMail	estimating@theswpppfirm.com
Contact Name	VICENTE C. BRAVO
Area Code	(805)
Phone Number	748-8576
Fax Area Code	(805)
Fax Phone Number	929-0501
Agency Name	DEPARTMENT OF TRANSPORTATION
Counties	01; 02; 03; 04; 05; 06; 07; 08; 09; 10; 11; 12; 13; 14; 15; 16; 17; 18; 19; 20; 21; 22; 23; 24; 25; 26; 27; 28; 29; 30; 31; 32; 33; 34; 35; 36; 37; 38; 39; 40; 41; 42; 43; 44; 45; 46; 47; 48; 49; 50; 51; 52; 53; 54; 55; 56; 57; 58;
Districts	01; 02; 03; 04; 05; 06; 07; 08; 09; 10; 11; 12;
DBE NAICS	238990; 541620;
ACDBE NAICS	
Work Codes	C2021 HYDROSEEDING; C2030 EROSION CONTROL; C8700 CONSULTANT, NON ENGINEERING; C8852 SWPPP Planning;
Licenses	B General Building Contractor; D64 Nonspecialized;
Trucks	
Gender	M
Ethnicity	NATIVE AMERICAN
Firm Type	DBE

Back To Query Form

Clay Miranda Trucking, Inc.
DBE & WBE
3220 W. BELMONT AVE.
FRESNO, CA. 93722
BUS:(559) 275-6250
FAX: (559) 275-6091

Project:	DOT Widen Shoulder And Construct Concrete Barrier
Contract :	06-Fre-41, 180-Var
Loc:	Various
	Bid Date: 9-3-14

Add 5% Increase On All Truck Hauls

0-0-0

All Single Loads Are Hourly.

STAND-BY AFTER

SPRS. & BTMS. 10 MIN.
TRANSFERS 30 MIN.
ROCK PLANT 10 MIN.
HOT PLANT 10 MIN.

ALL BIDS ARE BASED ON AMERICAN TONS
MINIMUM 25.00 TON LOADS

(Price is based on fuel cost not exceeding $ 4.00 per gal. For every .25 increase in fuel cost, add 2.5 % to quote.)

POINT OF ORIGIN	MATERIAL	Hourly Rate	BOTTOMS	SUPERS	TRANSFERS	SEMI ENDS	DELIVERY AREA
Various	AC/AB		95.00	95.00	95.00	100.00	Various

BY: Mike Miranda DATE:

CALIFORNIA UNIFIED CERTIFICATION PROGRAM
DISADVANTAGED BUSINESS ENTERPRISE CERTIFICATE

CLAY MIRANDA TRUCKING, INC.

3220 W. BELMONT
FRESNO, CA 93722

Owner: DEBORA COOPER

Business Structure: CORPORATION

This certificate acknowledges that said firm is approved by the California Unified Certification Program (CUCP) as a Disadvantaged Business Enterprise (DBE) as defined by the U.S. Department of Transportation (DOT) CFR 49 Part 26, as may be amended, for the following NAICS codes:

NAICS Code(s) * Indicates primary NAICS code

* 484110 General Freight Trucking, Local
484220 Specialized Freight (except Used Goods) Trucking, Local
423320 Brick, Stone, and Related Construction Material Merchant Wholesaler

Work Category Code(s)

C0625	SAND & GRAVEL	C9602	BOTTOM DUMP TRUCKING
C9605	FLAT BED TRUCKING	C9670	TRUCK RENTAL
C9771	TRUCK BROKER	C9774	TRUCKER

Licenses

CERTIFYING AGENCY:
CITY OF FRESNO
2101 G STREET, BUILDING A
FRESNO, CA 93706 0000
(559) 621-1182

UCP Firm Number : 5568

Beth McDonald
CUCP OFFICER

February 7, 2011

TABLE OF CONTENTS

1. SUMMARY OF EFFORTS TO IDENTIFY DBE, MBE, AND WBE SUBCONTRACTOR'S.
2. TRADE PAPER ADVERTISEMENTS.
3. WEBSITE ADVERTISEMENTS.
4. RECORD OF CONTACT WITH SMALL BUSINESS ADMINISTRATION ASSISTANCE CENTER.
5. INVITATION'S TO BID FAXED TO DBE, MBE, AND WBE SUBCONTRACTORS.
6. INVITATION'S TO BID EMAILED TO DBE, MBE, AND WBE SUBCONTRACTORS.
7. PHONE LOG OF SOLICITATION AND FOLLOW UP CALLS TO DBE, MBE, AND WBE SUB'S.
8. SUMMARY OF CRITERIA USED FOR SUBCONTRACTOR SELECTION.
9. BIDDING INFORMATION PROVIDED TO POTENTIAL SUBCONTRACTOR'S.
10. LIST OF SUBCONTRACTOR'S THAT PROVIDED AN ESTIMATE.
11. BID ITEMS MADE AVAILABLE FOR SUBCONTRACTOR'S TO BID.

1

SUMMARY OF EFFORTS TO IDENTIFY DBE, MBE, AND WBE SUBCONTRACTOR'S

SUMMARY OF EFFORTS TO IDENTIFY DBE, MBE, AND WBE SUBCONTRACTOR'S

1. On 07/10/2014 @ 8:46 am I Got onto the internet and visited the Small Business Administration website (www.sba.gov). I searched the site looking for a list of potential certified DBE, MBE, and WBE Subcontractor's. I found no such list on the SBA website so next I decided to try and find the contact information for the local SBA Assistance Office in the Fresno area. I searched all of the site pages and found the contact information for the local Fresno District SBA Office staff and printed it. I plan to call the Administration Office to find out whom I need to talk to about finding local potential minority Subcontractor's certified as a DBE, MBE, or WBE firm.
2. On 07/10/2014 @ 9:00 am, I Visited the Minority Business Development Agency website (www.mbda.gov). I searched the site looking for a listing of potential Minority Subcontractor's or a way to search a database full of certified minority Subcontractor's however, was not able to find any sort of search or list on the site. I decided to try and find the contact information for any local MBDA Office that might be in the area. I found the look for location page and after entering our location a map came up with a few local office locations. I selected the closest office location and clicked on the Contact Information tab. I printed out the contact information for the local MBDA office site. I will use the contact information to call the local office to try and get further help on identifying Certified Minority Subcontractor's in our local area.
3. On 07/10/2014 @ 9:08 am I went on to the Google search site online, and typed in "California DBE, MBE, and WBE Subcontractors" in the search bar. I then went through the top ten websites looking for any potential Minority Subcontractor's but I was not able to find any new contacts that I didn't already have on my Minority List.
4. On 07/10/2014 @ 9:13 am I decided to go ahead and visit the California Department of Transportation website (www.dot.ca.gov). I started searching around the site looking for a list of potential minority subcontractor's. I found a reference to a list on the Business Enterprise Program page of the website. I clicked on the CalCert Database link and was taken to a page where I could run a search query for certified minority Subcontractor's. I began entering the pertinent information into the search form and ran multiple searches for minority subs. I was able to search and find the contact information for many qualified and certified local minority DBE, MBE, and WBE Subcontractor's. I printed the list containing the contact information for certified minority subcontractor's that I could solicit for an estimate. I will use this printed list to solicit to Subcontractor's in the area on the list that are capable of completing the scopes of work that we will be subcontracting out on this project.

dbe subcontractors ca

+farmgirl Share

Web

About 1,190,000 results (0.84 seconds)

Streamlining **DBE** Outreach - **dbe**goodfaith.com
Ad www.**dbe**goodfaith.com/
We make good faith efforts easy - Helping you find **DBEs** since 2005

Find A Certified **DBE** Firm - **California** Department of ...
www.dot.**ca**.gov/.../find_certifie...
Certification@dot.**ca**.gov. Use the following database query form to find certified **DBE** firms for solicitation to meet **DBE** goal and contracting requirements.

DBE Application Forms - **California** Department of ...
www.dot.**ca**.gov/.../business_for...
In order to apply for **certification** as a **Disadvantaged Business Enterprise** (**DBE**), your firm must meet the following eligibility criteria stated in 49 CFR Part 26:.

[PDF] What is a **Disadvantaged Business Enterprise** - **Califo**...
www.dot.**ca**.gov/.../Disadvantag...
What is the **California** Unified **Certification** Program (CUCP)? ... the State of **California**, creating a "one-stop shopping" for **DBE certification** in **California**.

DBE/MBE/**WBE** Directory - Bureau of Contract ...
bca.lacity.org/index.cfm?nxt=ots&nxt_body=otsindex...
This listing is only for City-certified firms. For State-wide **Disadvantaged Business Enterprise certification** listing, go to the **California** Unified **Certification** Program ...

California Unified **Certification** Program
californiaucp.org/
Certification services are offered to businesses seeking to obtain either **DBE** or airport concessionaire **disadvantaged business enterprise** (ACDBE) status.

(CUCP) statewide **DBE** - **California** Unified **Certification** ...
californiaucp.org/cucpDirectory.htm
The **California** Unified **Certification** Program (CUCP) statewide **DBE** Directory is hosted by the **California** Department of Transportation (Caltrans) and is ...

State DOT and **DBE** Program Websites - U.S. Department of ...
www.dot.gov/.../state-dot-and...
Nov 18, 2013 - State DOT and **DBE** Program Websites ... **California**. DOT Site · **DBE** Site · **DBE** Directory. Colorado. DOT Site ... **DBE** Directory (**Contractors**).

Disadvantaged Business Enterprise (**DBE**) - City of San Di...
www.sandiego.gov/eoc/**dbe**/
State of **California** Certified **DBE** firms receive increased visibility through inclusion in the **California** Unified **Certification** Program (UCP) database of businesses.

[PDF] **DBE Certification** Process and Finding Certified Firms (P...
www.epa.gov/.../**dbe**/**dbe**...
1. U.S. Environmental Protection Agency. Office of Small Business Programs **Disadvantaged Business Enterprise** Program. **DBE Certification** Process & Finding ...

[DOC] (**dbe**) subcontracting commitment and reporting requirem...
https://www.sdge.com/.../**DBE**%20Form.doc?...
The **DBE Subcontract** Commitment outlines Contractor's **DBE** subcontracting ... In accordance with **California** Public Utilities Commission ("CPUC") General ...

Searches related to **dbe subcontractors ca**

dbe certification california

Ads

Good Faith Effort **DBE**
www.compliancenews.com/
The best bid package GFE ads & docs for state and federal projects.

Get **Subcontractor** Leads
www.homeadvisorpros.com/**Subcontractors**
(888) 774-4078
Find Local Projects And Grow Your Business. Join HomeAdvisor Today!

AIA Contract Documents®
www.aia.org/contractdocs
Get genuine protection and security On your G703 document with AIA.

New **Subcontractor** Jobs
www.1800contractor.com/
Get Local Contractor Leads & A Free Directory Listing For Your Business

DBE Subcontractor
www.wow.com/**DBE+Subcontractor**
Search for **DBE Subcontractor** Look Up Quick Results Now!

Apply for MBE WBE **DBE** 8A
www.mwbe-enterprises.com/
Certified Women Minority Businesses Success Rate 99% Service Guaranteed

See your ad here »

state of california wbe certification

O Clovis, CA - From your Internet address -

Back To Query Form

Search Returned 182 Records

Thu Jul 10 09:13:47 PDT 2014

Query Criteria

District: 06
County: FRESNO
Naics Category: 23 Construction
Licenses: A General Engineering Contractor
Firm Type: DBE

Firm ID	33638
Firm/DBA Name	A & P DEVELOPMENT & CONSTRUCTION, INC. DBA AP CONSTRUCTION,
Address Line1	3555 VOYAGER STREET, SUITE B
Address Line2	
City	TORRANCE
State	CA
Zip Code1	90503
Zip Code2	
Mailing Address Line1	
Mailing Address Line2	
Mailing City	
Mailing State	
Mailing Zip Code1	
Mailing Zip Code2	
Certification Type	DBE
Mail	pocampo@ap-construction.com
Contact Name	PETER OCAMPO
Area Code	(310)
Phone Number	793-2310
Fax Area Code	(310)
Fax Phone Number	793-2312
Agency Name	LOS ANGELES COUNTY METRO TRANSPORTATION AUTHORITY (MTA)
Counties	00;
Districts	00;
DBE NAICS	236210; 236220; 237110; 237130; 237990; 238220; 238910;
ACDBE NAICS	
Work Codes	A0710 SOIL PREPARATION SERVICES; C5501 STEEL STRUCTURES; C8783 Engineering - Structural; C9801 BUILDING CONSTRUCTION; C9850 PLUMBING; C9866 HEATING & AIR CONDITIONING; C9980 DEMOLITION; D3530 CONSTRUCTION & RELATED MACHINERY; E4952 SEWERAGE SYSTEMS;
Licenses	A General Engineering Contractor; B General Building Contractor; C13 Fencing Contractor; C36 Plumbing Contractor;
Trucks	
Gender	M
Ethnicity	HISPANIC
Firm Type	DBE

Firm ID	5270
Firm/DBA Name	A B S L CONSTRUCTION
Address Line1	29393 PACIFIC ST
Address Line2	
City	HAYWARD
State	CA
Zip Code1	94544
Zip Code2	

Mailing Address Line1	
Mailing Address Line2	
Mailing City	
Mailing State	
Mailing Zip Code1	
Mailing Zip Code2	
Certification Type	DBE
EMail	luis@absiconstruction.com
Contact Name	LUIS M. ALLENDE
Area Code	(510)
Phone Number	727-0900
Fax Area Code	(510)
Fax Phone Number	727-0910
Agency Name	DEPARTMENT OF TRANSPORTATION
Counties	01; 02; 03; 04; 05; 06; 07; 08; 09; 10; 11; 12; 13; 14; 15; 16; 17; 18; 19; 20; 21; 22; 23; 24; 25; 26; 27; 28; 29; 30; 31; 32; 33; 34; 35; 36; 37; 38; 39; 40; 41; 42; 43; 44; 45; 46; 47; 48; 49; 50; 51; 52; 53; 54; 55; 56; 57; 58;
Districts	01; 02; 03; 04; 05; 06; 07; 08; 09; 10; 11; 12;
DBE NAICS	237310; 238110; 238120; 238910;

ACDBE NAICS

Work Codes	C1201 TRAFFIC CONTROL SYSTEM; C1522 RESET, ADJUST ROADWAY ITEMS; C1531 PLANE ASPHALT CONCRETE; C1601 CLEARING & GRUBBING; C1901 ROADWAY EXCAVATION; C1910 GRADING; C1920 STRUCTURE EXCAVATION; C1930 STRUCTURE BACKFILL; C1940 DITCHES EXCAVATION; C4201 GROOVE & GRIND PAVEMENT; C5105 MINOR CONCRETE STRUCTURE; C5124 ERECT PRECAST CONCRETE; C5135 CONCRETE BLOCK & MASONRY RETAINING WALL; C5501 STEEL STRUCTURES; C5570 STEEL CRIB WALL; C9980 DEMOLITION;
Licenses	A General Engineering Contractor; B General Building Contractor;
Trucks	
Gender	M
Ethnicity	HISPANIC
Firm Type	DBE

Firm ID	219
Firm/DBA Name	A C DIKE CO
Address Line1	2788 VENTURE DR.
Address Line2	
City	LINCOLN
State	CA
Zip Code1	95648
Zip Code2	
Mailing Address Line1	
Mailing Address Line2	
Mailing City	
Mailing State	
Mailing Zip Code1	
Mailing Zip Code2	
Certification Type	DBE
EMail	email@acdike.com
Contact Name	GEORGETTE MC CLAIN
Area Code	(916)
Phone Number	645-7747
Fax Area Code	(916)
Fax Phone Number	645-9618
Agency Name	DEPARTMENT OF TRANSPORTATION
Counties	00;
Districts	00;
DBE NAICS	237990; 238110; 238120; 238910;

ACDBE NAICS

Work Codes	C1910 GRADING; C1920 STRUCTURE EXCAVATION; C1930 STRUCTURE BACKFILL; C1940 DITCHES EXCAVATION; C2602 AGGREGATE BASE; C3901 ASPHALT CONCRETE; C3910 PAVING ASPHALT (ASPHALT CONCRETE); C3940 PLACE ASPHALT CONCRETE DIKE & MISC;
Licenses	A General Engineering Contractor;
Trucks	
Gender	F
Ethnicity	CAUCASIAN
Firm Type	DBE

Firm ID	40975
Firm/DBA Name	A I M CONSULTING SERVICES
Address Line1	11401 VALLEY BLVD. #201
Address Line2	
City	EL MONTE
State	CA
Zip Code1	91731
Zip Code2	
Mailing Address Line1	
Mailing Address Line2	
Mailing City	
Mailing State	
Mailing Zip Code1	
Mailing Zip Code2	
Certification Type	DBE
EMail	gperez@aimcsworld.com
Contact Name	GABRIEL PEREZ
Area Code	(323)
Phone Number	271-4602
Fax Area Code	( )
Fax Phone Number	
Agency Name	LOS ANGELES COUNTY METRO TRANSPORTATION AUTHORITY (MTA)
Counties	00;
Districts	00;
DBE NAICS	236220; 541350;

ACDBE NAICS

Work Codes	C8731 Building Inspection Services; C9801 BUILDING CONSTRUCTION;
Licenses	A General Engineering Contractor; B General Building Contractor;
Trucks	
Gender	M
Ethnicity	HISPANIC
Firm Type	DBE

Firm ID	40742
Firm/DBA Name	A S CONTRACTORS, INC.
Address Line1	5347 COLE ROAD
Address Line2	
City	MARIPOSA
State	CA
Zip Code1	95338
Zip Code2	
Mailing Address Line1	
Mailing Address Line2	
Mailing City	
Mailing State	
Mailing Zip Code1	
Mailing Zip Code2	

Certification Type	DBE
EMail	deni@sti.com
Contact Name	DENI SMITH
Area Code	(209)
Phone Number	742-6684
Fax Area Code	(209)
Fax Phone Number	966-2643
Agency Name	CITY OF FRESNO
Counties	00;
Districts	00;
DBE NAICS	236115; 236116; 236118; 236210; 236220; 237110; 237120; 237130; 237210; 237310; 237990; 238110; 238120; 238130; 238140; 238170; 238190; 238350; 238390; 238990; 541620;
ACDBE NAICS	
Work Codes	C1901 ROADWAY EXCAVATION; C1910 GRADING; C1920 STRUCTURE EXCAVATION; C1930 STRUCTURE BACKFILL; C1970 EMBANKMENT CONSTRUCTION; C6800 SUBSURFACE DRAIN; C6819 FILTER FABRIC; C6820 PERMEABLE MATERIAL; C7000 PLASTIC PIPE; C7180 CAST IRON SEWER PIPE; C7191 SEWER MANHOLE; C7200 ROCK SLOPE PROTECTION; C9801 BUILDING CONSTRUCTION; C9829 RETAINER WALLS; C9842 MASONRY;
Licenses	A General Engineering Contractor; B General Building Contractor;
Trucks	
Gender	F
Ethnicity	CAUCASIAN
Firm Type	DBE

Firm ID	32335
Firm/DBA Name	A.J. VASCONI GEREAL ENGINEERING
Address Line1	1820 GALINDO STREET, SUITE 275
Address Line2	
City	CONCORD
State	CA
Zip Code1	94520
Zip Code2	
Mailing Address Line1	
Mailing Address Line2	
Mailing City	
Mailing State	
Mailing Zip Code1	
Mailing Zip Code2	
Certification Type	DBE
EMail	aj@ajvasconi.com
Contact Name	ANDREW J. VASCONI
Area Code	(925)
Phone Number	691-9400
Fax Area Code	( )
Fax Phone Number	
Agency Name	SANTA CLARA VALLEY TRANSPORTATION AUTHORITY (VTA)
Counties	02; 03; 04; 05; 06; 07; 09; 10; 11; 12; 17; 18; 20; 21; 22; 23; 24; 27; 28; 29; 31; 32; 34; 35; 39; 41; 43; 44; 45; 46; 48; 49; 50; 51; 52; 55; 57; 58;
Districts	01; 02; 03; 04; 05; 06; 10;
DBE NAICS	237310; 237990; 238110;
ACDBE NAICS	
Work Codes	C1901 ROADWAY EXCAVATION; C1920 STRUCTURE EXCAVATION; C5100 CONCRETE STRUCTURE; C8720 CIVIL ENGINEERING;
Licenses	A General Engineering Contractor;
Trucks	
Gender	M

Ethnicity	HISPANIC
Firm Type	DBE

Firm ID	32174
Firm/DBA Name	ACCORD ENGINEERING, INC
Address Line1	2923 PULLMAN STREET
Address Line2	
City	SANTA ANA
State	CA
Zip Code1	92705
Zip Code2	
Mailing Address Line1	
Mailing Address Line2	
Mailing City	
Mailing State	
Mailing Zip Code1	
Mailing Zip Code2	
Certification Type	DBE
EMail	dcheng@accordeng.com
Contact Name	DAVID CHENG
Area Code	(714)
Phone Number	241-7200
Fax Area Code	(949)
Fax Phone Number	251-0563
Agency Name	DEPARTMENT OF TRANSPORTATION
Counties	00;
Districts	00;
DBE NAICS	237110; 237310; 238910; 541330; 541620; 562910;
CDBE NAICS	
Work Codes	C8710 ENGINEERING; C8713 CONSULTANT, ENVIRONMENTAL; C8715 CONSULTANT, ENGINEERING; C8770 CONSTRUCTION MANAGEMENT; C9869 ASBESTOS REMOVAL/ABATEMENT; C9980 DEMOLITION; C9981 BUILDING MOVER;
Licenses	A General Engineering Contractor; EC Civil Engineer; HAZ Hazardous Waste;
Trucks	
Gender	M
Ethnicity	ASIAN PACIFIC
Firm Type	DBE

Firm ID	35149
Firm/DBA Name	ADVANCED GEOSOLUTIONS, INC
Address Line1	13 ORCHARD ROAD, SUITE 105
Address Line2	
City	LAKE FOREST
State	CA
Zip Code1	92630
Zip Code2	
Mailing Address Line1	
Mailing Address Line2	
Mailing City	
Mailing State	
Mailing Zip Code1	
Mailing Zip Code2	
Certification Type	DBE
EMail	jibaez@advgeosolutions.com
Contact Name	JUAN I. BAEZ
Area Code	(310)
Phone Number	796-9000

Fax Area Code	(310)
Fax Phone Number	796-9001
Agency Name	DEPARTMENT OF TRANSPORTATION
Counties	01; 07; 10; 15; 19; 21; 27; 28; 30; 33; 36; 37; 38; 40; 42; 44; 49; 56;
Districts	04; 05; 06; 07; 08; 11; 12;
DBE NAICS	238910; 238990;

ACDBE NAICS

Work Codes	C1601 CLEARING & GRUBBING; C1901 ROADWAY EXCAVATION; C1920 STRUCTURE EXCAVATION; C1930 STRUCTURE BACKFILL; C1940 DITCHES EXCAVATION; C8707 FEASIBILITY STUDIES; C8730 SAFETY STUDIES;
Licenses	A General Engineering Contractor; EC Civil Engineer;
Trucks	
Gender	M
Ethnicity	HISPANIC
Firm Type	DBE

Firm ID	39285
Firm/DBA Name	AHI CONSTRUCTION, INC.
Address Line1	752 NORTHPORT DRIVE, SUITE H
Address Line2	
City	WEST SACRAMENTO
State	CA
Zip Code1	95691
Zip Code2	
Mailing Address Line1	
Mailing Address Line2	
Mailing City	
Mailing State	
Mailing Zip Code1	
Mailing Zip Code2	
Certification Type	DBE
EMail	madams@ahiconstructs.com
Contact Name	MARK ADAMS
Area Code	(916)
Phone Number	400-3710
Fax Area Code	(916)
Fax Phone Number	400-3711
Agency Name	DEPARTMENT OF TRANSPORTATION
Counties	01; 02; 03; 04; 05; 06; 07; 08; 09; 10; 11; 12; 14; 16; 17; 18; 19; 20; 21; 22; 23; 24; 25; 26; 27; 28; 29; 30; 31; 32; 33; 34; 35; 36; 37; 38; 39; 40; 41; 42; 43; 44; 45; 46; 47; 48; 49; 50; 51; 52; 53; 54; 55; 56; 57; 58;
Districts	01; 02; 03; 04; 05; 06; 07; 08; 09; 10; 11; 12;
DBE NAICS	236115; 236118; 236220; 238320; 238330;

ACDBE NAICS

Work Codes	C8771 Construction Management - Commercial and Institutional Building Construction; C9801 BUILDING CONSTRUCTION; C9822 CARPENTRY; C9827 DRYWALL CONSTRUCTION; C9830 WALL COVERING; C9838 CERAMIC TILE; C9840 FLOOR COVERING; C9854 PAINTING STRUCTURES;
Licenses	A General Engineering Contractor; B General Building Contractor; C15 Flooring and Floor Covering Contractor; C33 Painting and Decorating Contractor; C54 Tile Contractor (Ceramic and Mosaic);
Trucks	
Gender	M
Ethnicity	BLACK
Firm Type	DBE

Firm ID	42023
Firm/DBA Name	AHTNA DESIGN-BUILD, INC
Address Line1	3200 EL CAMINO REAL, SUITE 240

Address Line2	
City	IRVINE
State	CA
Zip Code1	92602
Zip Code2	
Mailing Address Line1	
Mailing Address Line2	
Mailing City	
Mailing State	
Mailing Zip Code1	
Mailing Zip Code2	
Certification Type	DBE
EMail	corourke@ahtna.net
Contact Name	CRAIG O'ROURKE
Area Code	(714)
Phone Number	824-3471
Fax Area Code	(714)
Fax Phone Number	824-3474
Agency Name	DEPARTMENT OF TRANSPORTATION
Counties	00;
Districts	00;
DBE NAICS	237110; 237120; 237130; 237310; 237990; 238910; 541620;
ACDBE NAICS	
Work Codes	C8773 Construction Management - Highway, Street and Bridge Construction; C8775 Construction Management - Oil and Gas Pipeline and Releted Structure Construction; C8776 Construction Management - Other Heavy and Civil Construction; C8777 Construction Management - Power and Communication Line and Related Structure Construction; C8778 Construction Management - Water and Sewer Line and Related Structure Construction;
Licenses	A General Engineering Contractor;
Trucks	
Gender	M
Ethnicity	NATIVE AMERICAN
Firm Type	DBE

Firm ID	38466
Firm/DBA Name	AJ EXCAVATION
Address Line1	9662 W. KEARNEY BLVD
Address Line2	
City	FRESNO
State	CA
Zip Code1	93706
Zip Code2	
Mailing Address Line1	
Mailing Address Line2	
Mailing City	
Mailing State	
Mailing Zip Code1	
Mailing Zip Code2	
Certification Type	DBE
EMail	alisa@movendirt.com
Contact Name	ALISA EMMETT
Area Code	(559)
Phone Number	408-5908
Fax Area Code	(559)
Fax Phone Number	354-0639
Agency Name	CITY OF FRESNO
Counties	10;
Districts	06;

DBE NAICS	237210; 237990; 238910; 238990;
ACDBE NAICS	
Work Codes	C3901 ASPHALT CONCRETE;
Licenses	A General Engineering Contractor;
Trucks	
Gender	F
Ethnicity	CAUCASIAN
Firm Type	DBE

Firm ID	14421
Firm/DBA Name	ALISTO ENGINEERING GROUP, INC
Address Line1	2737 N. MAIN STREET, SUITE 200
Address Line2	
City	WALNUT CREEK
State	CA
Zip Code1	94597
Zip Code2	
Mailing Address Line1	
Mailing Address Line2	
Mailing City	
Mailing State	
Mailing Zip Code1	
Mailing Zip Code2	
Certification Type	DBE
EMail	asevilla@alisto.com
Contact Name	AL SEVILLA
Area Code	(925)
Phone Number	279-5000
Fax Area Code	(925)
Fax Phone Number	279-5001
Agency Name	CENTRAL CONTRA COSTA TRANSIT AUTHORITY (CCCTA)
Counties	00;
Districts	00;
DBE NAICS	237310; 541330; 541380; 541618; 541690; 562910; 924110;
ACDBE NAICS	
Work Codes	C8702 MANAGEMENT INFORMATION SYSTEMS; C8707 FEASIBILITY STUDIES; C8710 ENGINEERING; C8715 CONSULTANT, ENGINEERING; C8720 CIVIL ENGINEERING; C8722 ENVIRONMENTAL ENGINEER; C8730 SAFETY STUDIES; J9510 ENVIRONMENTAL QUALITY;
Licenses	A General Engineering Contractor; EC Civil Engineer;
Trucks	
Gender	M
Ethnicity	ASIAN PACIFIC
Firm Type	DBE

Firm ID	39157
Firm/DBA Name	ALL EARTH CONSTRUCTION
Address Line1	P.O. BOX 717
Address Line2	
City	AUBERRY
State	CA
Zip Code1	93602
Zip Code2	
Mailing Address Line1	P.O. BOX 717
Mailing Address Line2	
Mailing City	AUBERRY

Mailing State	CA
Mailing Zip Code1	93602
Mailing Zip Code2	
Certification Type	DBE
Mail	allearthconstruction@gmail.com
ontact Name	JED DAVIS
Area Code	(559)
Phone Number	287-7168
Fax Area Code	(559)
Fax Phone Number	855-2610
Agency Name	CITY OF FRESNO
Counties	10; 20; 22;
Districts	06; 10;
DBE NAICS	237990; 238990;

ACDBE NAICS

Work Codes	C2030 EROSION CONTROL;
Licenses	A General Engineering Contractor;
Trucks	
Gender	M
Ethnicity	NATIVE AMERICAN
Firm Type	DBE

Firm ID	24042
Firm/DBA Name	AMLAND CORP
Address Line1	3168 KNIGHTS BRIDGE RD
Address Line2	
City	SAN JOSE
tate	CA
ip Code1	95132
Zip Code2	
Mailing Address Line1	1401 FELIPE AVE
Mailing Address Line2	
Mailing City	SAN JOSE
Mailing State	CA
Mailing Zip Code1	95122
Mailing Zip Code2	
Certification Type	DBE
EMail	kevinphan@amlandcorp.com
Contact Name	KEVIN BAO PHAN
Area Code	(408)
Phone Number	929-3949
Fax Area Code	(408)
Fax Phone Number	298-4344
Agency Name	SANTA CLARA VALLEY TRANSPORTATION AUTHORITY (VTA)
Counties	00;
Districts	00;
DBE NAICS	236210; 237130; 237210; 237310; 238210;

ACDBE NAICS

Work Codes	C1901 ROADWAY EXCAVATION; C1910 GRADING; C2000 HIGHWAY PLANTING; C2030 EROSION CONTROL; C8405 THERMOPLASTIC TRAFFIC STRIPING & MARKING; C8406 PAINTEO TRAFFIC STRIPING & MARKING; C8501 PAVEMENT MARKING; C8604 LIGHTING; C9801 BUILDING CONSTRUCTION; C9858 RESIDENTIAL ELECTRICAL;
Licenses	A General Engineering Contractor; B General Building Contractor; C10 Electrical Contractor; C27 Landscaping Contractor;
Trucks	
Gender	M

Ethnicity	ASIAN PACIFIC
Firm Type	DBE

Firm ID	35033
Firm/DBA Name	ANDERSON BURTON CONSTRUCTION
Address Line1	1131 EL CAMINO REAL
Address Line2	
City	ARROYO GRANDE
State	CA
Zip Code1	93420
Zip Code2	
Mailing Address Line1	
Mailing Address Line2	
Mailing City	
Mailing State	
Mailing Zip Code1	
Mailing Zip Code2	
Certification Type	DBE
EMail	joni@anderson-burton.com
Contact Name	JONI ANDERSON
Area Code	(805)
Phone Number	481-5096
Fax Area Code	(805)
Fax Phone Number	473-8890
Agency Name	DEPARTMENT OF TRANSPORTATION
Counties	00;
Districts	00;
DBE NAICS	236115; 236118; 236210; 236220;
ACDBE NAICS	
Work Codes	C9801 BUILDING CONSTRUCTION; C9810 SMALL STRUCTURES; C9827 DRYWALL CONSTRUCTION; C9846 ADDITIONS, ALTERATIONS OR REPAIRS;
Licenses	A General Engineering Contractor; B General Building Contractor; C09 Drywall Contractor; D50 Suspended Ceilings;
Trucks	
Gender	F
Ethnicity	CAUCASIAN
Firm Type	DBE

Firm ID	2768
Firm/DBA Name	ANIL VERMA ASSOCIATES, INC
Address Line1	444 S. FLOWER STREET, SUITE 1688
Address Line2	
City	LOS ANGELES
State	CA
Zip Code1	90071
Zip Code2	
Mailing Address Line1	
Mailing Address Line2	
Mailing City	
Mailing State	
Mailing Zip Code1	
Mailing Zip Code2	
Certification Type	DBE
EMail	anilverma@earthlink.net
Contact Name	ANIL VERMA
Area Code	(213)
Phone Number	624-6908
Fax Area Code	(213)

Fax Phone Number	624-1188
Agency Name	LOS ANGELES COUNTY METRO TRANSPORTATION AUTHORITY (MTA)
Counties	00;
Districts	00;
DBE NAICS	236115; 236116; 236210; 236220; 237110; 237130; 237310; 237990; 541330; 541690;

ACDBE NAICS

Work Codes	C8707 FEASIBILITY STUDIES; C8710 ENGINEERING; C8730 SAFETY STUDIES; C9801 BUILDING CONSTRUCTION; E4952 SEWERAGE SYSTEMS;
Licenses	A General Engineering Contractor; B General Building Contractor;
Trucks	
Gender	M
Ethnicity	ASIAN SUBCONTINENT
Firm Type	DBE

Firm ID	31152
Firm/DBA Name	ANTHONY'S LASER LEVELING
Address Line1	7258 W. RIALTO AVENUE
Address Line2	
City	FRESNO
State	CA
Zip Code1	93723
Zip Code2	
Mailing Address Line1	
Mailing Address Line2	
Mailing City	
Mailing State	
Mailing Zip Code1	
Mailing Zip Code2	
Certification Type	DBE
EMail	aavila7777@gmail.com
Contact Name	MARY JO & ANTHONY AVILA
Area Code	(559)
Phone Number	846-7608
Fax Area Code	(559)
Fax Phone Number	276-1223
Agency Name	DEPARTMENT OF TRANSPORTATION
Counties	02; 03; 05; 10; 15; 16; 20; 22; 24; 39; 54; 55; 56;
Districts	06; 07; 10;
DBE NAICS	238910;

ACDBE NAICS

Work Codes	A0710 SOIL PREPARATION SERVICES; C0700 CONSTRUCTION STAKING SUPPLIER; C1601 CLEARING & GRUBBING; C1901 ROADWAY EXCAVATION; C1920 STRUCTURE EXCAVATION; C1930 STRUCTURE BACKFILL; C1940 DITCHES EXCAVATION; C2030 EROSION CONTROL; C9980 DEMOLITION;
Licenses	A General Engineering Contractor;
Trucks	
Gender	M
Ethnicity	HISPANIC
Firm Type	DBE

Firm ID	37715
Firm/DBA Name	APADANA ENGINEERING, INC.
Address Line1	150 EXECUTIVE PARK BLVD SUITE NO. 4700
Address Line2	
City	SAN FRANCISCO

State	CA
Zip Code1	94134
Zip Code2	
Mailing Address Line1	
Mailing Address Line2	
Mailing City	
Mailing State	
Mailing Zip Code1	
Mailing Zip Code2	
Certification Type	DBE
EMail	apadana1@sbcglobal.net; sopida@sbcglobal.net
Contact Name	SOPIDA SIADAT
Area Code	(415)
Phone Number	859-5915
Fax Area Code	(415)
Fax Phone Number	859-5935
Agency Name	SAN FRANCISCO MUNICIPAL TRANSPORTATION AGENCY
Counties	00;
Districts	00;
DBE NAICS	237110; 237310; 237990; 531210;

ACDBE NAICS

Work Codes	C8773 Construction Management - Highway, Street and Bridge Construction; H6530 REAL ESTATE AGENTS & MANAGERS;
Licenses	A General Engineering Contractor;
Trucks	
Gender	F
Ethnicity	OTHER
Firm Type	DBE

Firm ID	41977
Firm/DBA Name	ARAMEXX GROUP, INC. DBA ARAMEXX CONSTRUCTION
Address Line1	13040 SMOKETREE PLACE
Address Line2	
City	CHINO
State	CA
Zip Code1	91710
Zip Code2	
Mailing Address Line1	
Mailing Address Line2	
Mailing City	
Mailing State	
Mailing Zip Code1	
Mailing Zip Code2	
Certification Type	DBE
EMail	rita@aramexxgroupinc.com
Contact Name	RITA SAMOUR
Area Code	(909)
Phone Number	746-8066
Fax Area Code	(909)
Fax Phone Number	591-4569
Agency Name	LOS ANGELES COUNTY METRO TRANSPORTATION AUTHORITY (MTA)
Counties	00;
Districts	00;
DBE NAICS	221310; 238990; 561730;

ACDBE NAICS

Work Codes	C9867 LANDSCAPING CONTRACTOR; E4940 WATER SUPPLY;
Licenses	A General Engineering Contractor; B General Building Contractor; C27 Landscaping Contractor;
Trucks	
ender	M
ethnicity	HISPANIC
Firm Type	DBE

Firm ID	13602
Firm/DBA Name	AUSTIN ENTERPRISE
Address Line1	13421 SNOW ROAD
Address Line2	
City	BAKERSFIELD
State	CA
Zip Code1	93314
Zip Code2	
Mailing Address Line1	PO BOX 81926
Mailing Address Line2	
Mailing City	BAKERSFIELD
Mailing State	CA
Mailing Zip Code1	93380
Mailing Zip Code2	
Certification Type	DBE
EMail	paustin@austin-enterprise.com
Contact Name	PATTI AUSTIN
Area Code	(661)
Phone Number	589-1001
Fax Area Code	(661)
Fax Phone Number	589-9509
gency Name	CITY OF LOS ANGELES
ounties	00;
Districts	00;
DBE NAICS	238110; 532412;

ACDBE NAICS

Work Codes	C1200 CONSTRUCTION AREA SIGNS; C1522 RESET, ADJUST ROADWAY ITEMS; C1901 ROADWAY EXCAVATION; C3701 SEAL COAT; C4010 PORTLAND CEMENT & CONCRETE PAVEMENT; C4101 PAVEMENT SUBSEALING & JACKING; C4201 GROOVE & GRIND PAVEMENT; C5100 CONCRETE STRUCTURE; C5111 CONCRETE OVERLAY, DRILL & BOND; C5620 ROADSIDE SIGN; C9905 CUTTING; C9907 CONSTRUCTION EQUIPMENT RENTAL;
Licenses	A General Engineering Contractor; D06 Concrete Related Services;
Trucks	
Gender	F
Ethnicity	HISPANIC
Firm Type	DBE

Firm ID	41800
Firm/DBA Name	AVISON CONSTRUCTION, INC.
Address Line1	40365 BRICKYARD DRIVE, #105
Address Line2	
City	MADERA
State	CA
Zip Code1	93636
ip Code2	
ailing Address Line1	
Mailing Address Line2	
Mailing City	
Mailing State	

Mailing Zip Code1	
Mailing Zip Code2	
Certification Type	DBE
EMail	kavila@avisoninc.com
Contact Name	KELLY AVILA
Area Code	(559)
Phone Number	431-0317
Fax Area Code	(559)
Fax Phone Number	431-0321
Agency Name	CITY OF FRESNO
Counties	10; 20; 24; 27; 38; 39;
Districts	04; 05; 06; 10;
DBE NAICS	237110; 237310; 237990; 238110; 238210; 238910; 238990;
ACDBE NAICS	
Work Codes	C1901 ROADWAY EXCAVATION; C1910 GRADING; C1920 STRUCTURE EXCAVATION; C1930 STRUCTURE BACKFILL; C2201 FINISHING ROADWAY; C2501 AGGREGATE SUBBASE; C2602 AGGREGATE BASE; C3901 ASPHALT CONCRETE; C5105 MINOR CONCRETE STRUCTURE; C7000 PLASTIC PIPE; C7301 CONCRETE CURB & SIDEWALK - MISC;
Licenses	A General Engineering Contractor;
Trucks	
Gender	M
Ethnicity	HISPANIC
Firm Type	DBE

Firm ID	36494
Firm/DBA Name	B. L. EQUIPMENT RENTAL AND SUPPLY
Address Line1	2725 W. CHERRY COURT
Address Line2	
City	VISALIA
State	CA
Zip Code1	93277
Zip Code2	
Mailing Address Line1	
Mailing Address Line2	
Mailing City	
Mailing State	
Mailing Zip Code1	
Mailing Zip Code2	
Certification Type	DBE
EMail	blequipment@aol.com
Contact Name	BETTY LEA
Area Code	(559)
Phone Number	805-3656
Fax Area Code	(559)
Fax Phone Number	625-5786
Agency Name	DEPARTMENT OF TRANSPORTATION
Counties	01; 02; 03; 04; 05; 06; 07; 08; 09; 10; 11; 12; 13; 14; 15; 16; 17; 18; 19; 20; 21; 22; 23; 24; 25; 26; 27; 28; 29; 30; 31; 32; 33; 34; 35; 36; 37; 38; 39; 40; 41; 42; 43; 44; 45; 46; 47; 48; 49; 50; 51; 52; 53; 54; 55; 56; 57; 58;
Districts	01; 02; 03; 04; 05; 06; 07; 08; 09; 10; 11; 12;
DBE NAICS	237310; 532412; 532490;
ACDBE NAICS	
Work Codes	C9907 CONSTRUCTION EQUIPMENT RENTAL; I7350 MISC EQUIPMENT RENTAL & LEASING;
Licenses	A General Engineering Contractor;
Trucks	
Gender	F

Ethnicity	CAUCASIAN
Firm Type	DBE

Firm ID	21429
Firm/DBA Name	BARAJAS & ASSOCIATES, INC.
Address Line1	1114 S. MAIN STREET
Address Line2	
City	LAS VEGAS
State	NV
Zip Code1	89104
Zip Code2	1027
Mailing Address Line1	
Mailing Address Line2	
Mailing City	
Mailing State	
Mailing Zip Code1	
Mailing Zip Code2	
Certification Type	DBE
EMail	antoniobarajas@barajasinc.com
Contact Name	ANTONIO BARAJAS
Area Code	(702)
Phone Number	360-4477
Fax Area Code	(702)
Fax Phone Number	360-4480
Agency Name	DEPARTMENT OF TRANSPORTATION
Counties	00;
Districts	00;
DBE NAICS	238990;
CDBE NAICS	
Work Codes	C8700 CONSULTANT, NON ENGINEERING;
Licenses	A General Engineering Contractor;
Trucks	
Gender	M
Ethnicity	HISPANIC
Firm Type	DBE

Firm ID	33211
Firm/DBA Name	BASS ELECTRIC
Address Line1	390 SWIFT AVE., STE. 12
Address Line2	
City	SOUTH SAN FRANCISCO
State	CA
Zip Code1	94080
Zip Code2	
Mailing Address Line1	
Mailing Address Line2	
Mailing City	
Mailing State	
Mailing Zip Code1	
Mailing Zip Code2	
Certification Type	DBE
EMail	
Contact Name	JEFFREY YEE
Area Code	(415)
Phone Number	295-1600
Fax Area Code	(650)
Fax Phone Number	869-3509

Agency Name	BAY AREA RAPID TRANSIT DISTRICT (BART)
Counties	00;
Districts	00;
DBE NAICS	237990; 238210;
ACDBE NAICS	
Work Codes	C1201 TRAFFIC CONTROL SYSTEM; C9858 RESIDENTIAL ELECTRICAL;
Licenses	A General Engineering Contractor; C10 Electrical Contractor;
Trucks	
Gender	M
Ethnicity	ASIAN PACIFIC
Firm Type	DBE

Firm ID	21117
Firm/DBA Name	BAY LINE CUTTING & CORING, INC.
Address Line1	1635 4TH STREET
Address Line2	
City	BERKELEY
State	CA
Zip Code1	94710
Zip Code2	
Mailing Address Line1	
Mailing Address Line2	
Mailing City	
Mailing State	
Mailing Zip Code1	
Mailing Zip Code2	
Certification Type	DBE
EMail	jcbayline@sbcglobal.net
Contact Name	JUAN ARREGUIN
Area Code	(510)
Phone Number	527-1000
Fax Area Code	(510)
Fax Phone Number	527-0500
Agency Name	DEPARTMENT OF TRANSPORTATION
Counties	01; 02; 03; 04; 05; 06; 07; 08; 09; 10; 11; 12; 13; 14; 15; 16; 17; 18; 19; 20; 21; 22; 23; 24; 25; 26; 27; 28; 29; 30; 31; 32; 33; 34; 35; 36; 37; 38; 39; 40; 41; 42; 43; 44; 45; 46; 47; 48; 49; 50; 51; 52; 53; 54; 55; 56; 57; 58;
Districts	01; 02; 03; 04; 05; 06; 07; 08; 09; 10; 11; 12;
DBE NAICS	237310;
ACDBE NAICS	
Work Codes	C1580 MODIFY BRIDGE ITEM; C5100 CONCRETE STRUCTURE; C5105 MINOR CONCRETE STRUCTURE; C5110 CONCRETE SURFACE FINISH; C5150 CORE CONCRETE - REPAIR BRIDGE DECK;
Licenses	A General Engineering Contractor;
Trucks	
Gender	M
Ethnicity	HISPANIC
Firm Type	DBE

Firm ID	37634
Firm/DBA Name	BELLAGIO LANDSCAPING
Address Line1	15204 E. ANNADALE
Address Line2	
City	SANGER
State	CA
Zip Code1	93657

Zip Code2	
Mailing Address Line1	
Mailing Address Line2	
Mailing City	
Mailing State	
Mailing Zip Code1	
Mailing Zip Code2	
Certification Type	DBE
EMail	bellagiolands@aol.com
Contact Name	EDWARD A. CUADROS
Area Code	(559)
Phone Number	217-8295
Fax Area Code	(559)
Fax Phone Number	875-0323
Agency Name	CITY OF FRESNO
Counties	10; 14; 15; 16; 20; 22; 24; 27; 35; 40; 50; 54;
Districts	05; 06; 09; 10;
DBE NAICS	221310; 237110; 237310; 237990; 238910;

ACDBE NAICS

Work Codes	C0620 LANDSCAPING & NURSERY SUPPLIER; C2065 IRRIGATION SYSTEM;
Licenses	A General Engineering Contractor; C27 Landscaping Contractor;
Trucks	
Gender	M
Ethnicity	OTHER
Firm Type	DBE

Firm ID	77
Firm/DBA Name	BERT W SALAS, INC.
Address Line1	10769 WOODSIDE AVENUE, SUITE 201
Address Line2	
City	SANTEE
State	CA
Zip Code1	92071
Zip Code2	3175
Mailing Address Line1	
Mailing Address Line2	
Mailing City	
Mailing State	
Mailing Zip Code1	
Mailing Zip Code2	
Certification Type	DBE
EMail	bsalaz@bertsalas.com
Contact Name	BOB E. SALAZ
Area Code	(619)
Phone Number	562-7711
Fax Area Code	(619)
Fax Phone Number	258-3515
Agency Name	DEPARTMENT OF TRANSPORTATION
Counties	00;
Districts	00;
DBE NAICS	237310; 238110; 238120; 238910; 238990;

ACDBE NAICS

C1601 CLEARING & GRUBBING; C1901 ROADWAY EXCAVATION; C1920 STRUCTURE EXCAVATION; C1930 STRUCTURE BACKFILL; C1940 DITCHES EXCAVATION; C5105 MINOR CONCRETE STRUCTURE; C5501 STEEL STRUCTURES; C5570 STEEL CRIB WALL; C6200 ALTERNATIVE PIPE CULVERT; C6500 REINFORCED CONCRETE PIPE; C6650 CORRUGATED METAL PIPE (CSP); C6819 FILTER FABRIC;

Work Codes	C7065 DEBRIS RACK-DRAINAGE GATE; C7140 CLAY SEWER PIPE; C7191 SEWER MANHOLE; C7215 CONCRETED-ROCK SLOPE PROTECTION; C7301 CONCRETE CURB & SIDEWALK - MISC; C7500 MISC IRON & STEEL FRAME, COVER & GRATE; C9980 DEMOLITION;
Licenses	A General Engineering Contractor;
Trucks	
Gender	M
Ethnicity	HISPANIC
Firm Type	DBE

Firm ID	34267
Firm/DBA Name	BESS TESTLAB, INC.
Address Line1	991 GEORGE STREET
Address Line2	
City	SANTA CLARA
State	CA
Zip Code1	95054
Zip Code2	
Mailing Address Line1	
Mailing Address Line2	
Mailing City	
Mailing State	
Mailing Zip Code1	
Mailing Zip Code2	
Certification Type	DBE
EMail	jose@besstestlab.com
Contact Name	JUAN JOSE BOHORQUEZ
Area Code	(408)
Phone Number	988-0101
Fax Area Code	(408)
Fax Phone Number	988-0103
Agency Name	SANTA CLARA VALLEY TRANSPORTATION AUTHORITY (VTA)
Counties	00;
Districts	00;
DBE NAICS	237110; 238910; 541380; 561990;

ACDBE NAICS

Work Codes	I8734 LABORATORY TESTING AND ANALYSIS;
Licenses	A General Engineering Contractor; D06 Concrete Related Services; D56 Trenching; HAZ Hazardous Waste;
Trucks	
Gender	M
Ethnicity	HISPANIC
Firm Type	DBE

Firm ID	36647
Firm/DBA Name	BIG VALLEY ASPHALT
Address Line1	3510 BRIAN WAY
Address Line2	
City	BAKERSFIELD
State	CA
Zip Code1	93308
Zip Code2	
Mailing Address Line1	3510 BRIAN WAY
Mailing Address Line2	
Mailing City	BAKERSFIELD
Mailing State	CA
Mailing Zip Code1	93308
Mailing Zip Code2	

Certification Type	DBE
EMail	donnawatson52@yahoo.com
Contact Name	DONNA WATSON
Area Code	(661)
Phone Number	587-5837
Fax Area Code	(661)
Fax Phone Number	326-8562
Agency Name	DEPARTMENT OF TRANSPORTATION
Counties	10; 15; 19; 39;
Districts	06; 07; 10;
DBE NAICS	237310; 238990;

ACDBE NAICS

Work Codes	C3910 PAVING ASPHALT (ASPHALT CONCRETE); C4040 CLEAN & SEAL PAVEMENT JOINTS - ROUT & SEAL CRACKS; C8501 PAVEMENT MARKING;
Licenses	A General Engineering Contractor;
Trucks	
Gender	F
Ethnicity	CAUCASIAN
Firm Type	DBE

Firm ID	38922
Firm/DBA Name	BLACK STONE ASPHALT CONSTRUCTION, INC.
Address Line1	3112 ANTONINO AVENUE
Address Line2	
City	BAKERSFIELD
State	CA
Zip Code1	93308
Zip Code2	
Mailing Address Line1	
Mailing Address Line2	
Mailing City	
Mailing State	
Mailing Zip Code1	
Mailing Zip Code2	
Certification Type	DBE
EMail	info@BLACKSTONEASPHALT.COM
Contact Name	NORMAN GALANSKI
Area Code	(661)
Phone Number	282-8800
Fax Area Code	(661)
Fax Phone Number	282-8803
Agency Name	DEPARTMENT OF TRANSPORTATION
Counties	10; 15; 16; 24; 40; 42; 43; 45; 54; 55; 56;
Districts	02; 04; 05; 06; 07; 10;
DBE NAICS	237310;

ACDBE NAICS

Work Codes	C1910 GRADING; C3701 SEAL COAT; C3910 PAVING ASPHALT (ASPHALT CONCRETE);
Licenses	A General Engineering Contractor;
Trucks	
Gender	M
Ethnicity	HISPANIC
Firm Type	DBE

Firm ID	36219

Firm/DBA Name	BLANCO CONSTRUCTION
Address Line1	4435 CARLSON PLACE
Address Line2	
City	RIVERSIDE
State	CA
Zip Code1	92503
Zip Code2	3023
Mailing Address Line1	
Mailing Address Line2	
Mailing City	
Mailing State	
Mailing Zip Code1	
Mailing Zip Code2	
Certification Type	DBE
EMail	lawym2004@aol.com
Contact Name	LEONARDO BLANCO
Area Code	(951)
Phone Number	250-6692
Fax Area Code	(951)
Fax Phone Number	602-2050
Agency Name	DEPARTMENT OF TRANSPORTATION
Counties	10; 12; 13; 15; 19; 24; 30; 33; 36; 37; 40; 42; 43; 56;
Districts	01; 04; 05; 06; 07; 08; 10; 11; 12;
DBE NAICS	237310;
ACDBE NAICS	
Work Codes	C1910 GRADING; E4952 SEWERAGE SYSTEMS;
Licenses	A General Engineering Contractor;
Trucks	
Gender	M
Ethnicity	HISPANIC
Firm Type	DBE

Firm ID	30815
Firm/DBA Name	BRAHMA ENGINEERING, INC
Address Line1	222 W. CARMEN LANE #105
Address Line2	
City	SANTA MARIA
State	CA
Zip Code1	93458
Zip Code2	
Mailing Address Line1	895 DAVID RD
Mailing Address Line2	
Mailing City	SANTA MARIA
Mailing State	CA
Mailing Zip Code1	93455
Mailing Zip Code2	
Certification Type	DBE
EMail	brigette@brahmaengineering.com
Contact Name	ANDY PIVOVAROFF
Area Code	(805)
Phone Number	925-3800
Fax Area Code	(805)
Fax Phone Number	925-1143
Agency Name	DEPARTMENT OF TRANSPORTATION
Counties	01; 02; 03; 04; 05; 06; 07; 08; 09; 10; 11; 12; 13; 14; 15; 16; 17; 18; 19; 20; 21; 22; 23; 24; 25; 26; 27; 28; 29; 30; 31; 32; 33; 34; 35; 36; 37; 38; 39; 40; 41; 42; 43; 44; 45; 46; 47; 48; 49; 50; 51; 52; 53; 54; 55; 56; 57; 58;
Districts	01; 02; 03; 04; 05; 06; 07; 08; 09; 10; 11; 12;

DBE NAICS	236210; 237310; 238350; 238990;
ACDBE NAICS	
Work Codes	C9801 BUILDING CONSTRUCTION; C9810 SMALL STRUCTURES; C9822 CARPENTRY; C9874 HARDWARE (ROUGH); C9876 HARDWARE (FINISH);
Licenses	A General Engineering Contractor; B General Building Contractor; C39 Roofing Contractor;
Trucks	
Gender	M
Ethnicity	HISPANIC
Firm Type	DBE

Firm ID	39330
Firm/DBA Name	BRAVO PACIFIC, INC.
Address Line1	11818 FAIRWAY DRIVE
Address Line2	
City	YUCAIPA
State	CA
Zip Code1	92399
Zip Code2	
Mailing Address Line1	
Mailing Address Line2	
Mailing City	
Mailing State	
Mailing Zip Code1	
Mailing Zip Code2	
Certification Type	DBE
EMail	bravosegs@hotmail.com
Contact Name	EDWARD MARMOLEJO
rea Code	(909)
hone Number	915-8391
Fax Area Code	(909)
Fax Phone Number	790-1637
Agency Name	LOS ANGELES COUNTY METRO TRANSPORTATION AUTHORITY (MTA)
Counties	00;
Districts	00;
DBE NAICS	236115; 236116; 236117; 236118; 236210; 236220; 237310; 237990; 238110;
ACDBE NAICS	
Work Codes	D3530 CONSTRUCTION & RELATED MACHINERY;
Licenses	A General Engineering Contractor;
Trucks	
Gender	M
Ethnicity	HISPANIC
Firm Type	DBE

Firm ID	30173
Firm/DBA Name	BURKE CONSTRUCTION
Address Line1	4421 TENNESSEE DRIVE
Address Line2	
City	SHINGLE SPRINGS
State	CA
Zip Code1	95682
ip Code2	
Mailing Address Line1	P.O. BOX 921
Mailing Address Line2	
Mailing City	SHINGLE SPRINGS
Mailing State	CA

Mailing Zip Code1	95682
Mailing Zip Code2	
Certification Type	DBE
EMail	burkebid@gmail.com
Contact Name	MICHAEL J. BURKE
Area Code	(530)
Phone Number	676-1009
Fax Area Code	(530)
Fax Phone Number	672-2411
Agency Name	DEPARTMENT OF TRANSPORTATION
Counties	00;
Districts	00;
DBE NAICS	237310; 238110; 238120; 238910; 562910;
ACDBE NAICS	
Work Codes	C1601 CLEARING & GRUBBING; C1901 ROADWAY EXCAVATION; C1920 STRUCTURE EXCAVATION; C1930 STRUCTURE BACKFILL; C1940 DITCHES EXCAVATION; C5501 STEEL STRUCTURES; C5570 STEEL CRIB WALL; C9980 DEMOLITION;
Licenses	A General Engineering Contractor; HAZ Hazardous Waste;
Trucks	
Gender	M
Ethnicity	NATIVE AMERICAN
Firm Type	DBE

Firm ID	41061
Firm/DBA Name	BWW & COMPANY
Address Line1	301 9TH STREET, SUITE 100
Address Line2	
City	REDLANDS
State	CA
Zip Code1	92374
Zip Code2	
Mailing Address Line1	
Mailing Address Line2	
Mailing City	
Mailing State	
Mailing Zip Code1	
Mailing Zip Code2	
Certification Type	DBE
EMail	b-w-w@live.com
Contact Name	BOBBY W. WILSON
Area Code	(909)
Phone Number	268-8516
Fax Area Code	(909)
Fax Phone Number	435-0392
Agency Name	DEPARTMENT OF TRANSPORTATION
Counties	01; 02; 03; 04; 05; 06; 07; 08; 09; 10; 11; 12; 13; 14; 15; 16; 17; 18; 19; 20; 21; 22; 23; 24; 25; 26; 27; 28; 29; 30; 31; 32; 33; 34; 35; 36; 37; 38; 39; 40; 41; 42; 43; 44; 45; 46; 47; 48; 49; 50; 51; 52; 53; 54; 55; 56; 57; 58;
Districts	01; 02; 03; 04; 05; 06; 07; 08; 09; 10; 11; 12;
DBE NAICS	236115; 236220; 237110; 237210; 238110; 238910;
ACDBE NAICS	
Work Codes	C5100 CONCRETE STRUCTURE; C9801 BUILDING CONSTRUCTION; C9810 SMALL STRUCTURES; C9980 DEMOLITION;
Licenses	A General Engineering Contractor; B General Building Contractor; C08 Concrete Contractor; C21 Building Moving / Demolition Contractor;
Trucks	
	M

Gender	
Ethnicity	BLACK
Firm Type	DBE

Firm ID	36394
Firm/DBA Name	C-1 CONSTRUCTION CORP
Address Line1	3454 W. 1ST STREET, STE. #2
Address Line2	
City	LOS ANGELES
State	CA
Zip Code1	90004
Zip Code2	
Mailing Address Line1	
Mailing Address Line2	
Mailing City	
Mailing State	
Mailing Zip Code1	
Mailing Zip Code2	
Certification Type	DBE
EMail	sue.kim@c1construction.com
Contact Name	WON KIM
Area Code	(213)
Phone Number	365-2123
Fax Area Code	(213)
Fax Phone Number	365-3234
Agency Name	CITY OF LOS ANGELES
Counties	00;
Districts	00;
DBE NAICS	236115; 236116; 236118; 236210; 236220; 238910; 541330;
ACDBE NAICS	
Work Codes	C8710 ENGINEERING; C9801 BUILDING CONSTRUCTION; C9980 DEMOLITION; C9981 BUILDING MOVER;
Licenses	A General Engineering Contractor; B General Building Contractor; C21 Building Moving / Demolition Contractor;
Trucks	
Gender	M
Ethnicity	ASIAN PACIFIC
Firm Type	DBE

Firm ID	35563
Firm/DBA Name	C.R. GANN DEMOLITION, INC.
Address Line1	31521 PARK BLVD.
Address Line2	
City	NUEVO
State	CA
Zip Code1	92567
Zip Code2	
Mailing Address Line1	
Mailing Address Line2	
Mailing City	
Mailing State	
Mailing Zip Code1	
Mailing Zip Code2	
Certification Type	DBE
EMail	Linda@crganndemolition.com
Contact Name	LINDA S. BROYLES
Area Code	(951)
Phone Number	940-0937

Fax Area Code	(951)
Fax Phone Number	916-4265
Agency Name	DEPARTMENT OF TRANSPORTATION
Counties	10; 19; 30; 33; 36; 37; 42; 56;
Districts	05; 06; 07; 08; 11; 12;
DBE NAICS	238910;

ACDBE NAICS

Work Codes	C1601 CLEARING & GRUBBING; C9869 ASBESTOS REMOVAL/ABATEMENT; C9980 DEMOLITION;
Licenses	A General Engineering Contractor; ASB Asbestos; C21 Building Moving / Demolition Contractor; HAZ Hazardous Waste;
Trucks	FOR HIRE - 1;
Gender	F
Ethnicity	CAUCASIAN
Firm Type	DBE

Firm ID	32903
Firm/DBA Name	C2PM
Address Line1	16520 BAKE PKWY., SUITE 250
Address Line2	
City	IRVINE
State	CA
Zip Code1	92618
Zip Code2	
Mailing Address Line1	16520 BAKE PKWY., SUITE 250
Mailing Address Line2	
Mailing City	IRVINE
Mailing State	CA
Mailing Zip Code1	92618
Mailing Zip Code2	
Certification Type	DBE
EMail	ROWENA@C2PM.com
Contact Name	ROWENA ALTAHA
Area Code	(949)
Phone Number	333-3700
Fax Area Code	(949)
Fax Phone Number	333-3701
Agency Name	LOS ANGELES COUNTY METRO TRANSPORTATION AUTHORITY (MTA)
Counties	00;
Districts	00;
DBE NAICS	237110; 237120; 237130; 237310; 237990; 541330; 541350; 541611; 541618; 541620;

ACDBE NAICS

Work Codes	C8701 BUSINESS ADMINISTRATION; C8710 ENGINEERING; C8713 CONSULTANT, ENVIRONMENTAL; C8715 CONSULTANT, ENGINEERING; C8770 CONSTRUCTION MANAGEMENT; C8773 Construction Management - Highway, Street and Bridge Construction; C8775 Construction Management - Oil and Gas Pipeline and Releted Structure Construction; C8776 Construction Management - Other Heavy and Civil Construction; C8777 Construction Management - Power and Communication Line and Related Structure Construction; C8778 Construction Management - Water and Sewer Line and Related Structure Construction;
Licenses	A General Engineering Contractor;
Trucks	
Gender	F
Ethnicity	ASIAN PACIFIC
Firm Type	DBE

Firm ID	41929
Firm/DBA Name	CABLE LINKS CONSTRUCTION GROUP, INC.
	5940 E SHIELDS, SUITE 101

Address Line1	
Address Line2	
City	FRESNO
State	CA
Zip Code1	93727
Zip Code2	
Mailing Address Line1	
Mailing Address Line2	
Mailing City	
Mailing State	
Mailing Zip Code1	
Mailing Zip Code2	
Certification Type	DBE
EMail	office@clcinc.us
Contact Name	SANDY SLUMBERGER
Area Code	(559)
Phone Number	277-8555
Fax Area Code	(559)
Fax Phone Number	274-1555
Agency Name	CITY OF FRESNO
Counties	01; 07; 10; 16; 19; 20; 21; 24; 27; 28; 30; 34; 37; 38; 40; 41; 43; 44; 54;
Districts	03; 04; 05; 06; 07; 10; 11; 12;
DBE NAICS	236220; 238210; 238990; 517910; 561621;

ACDBE NAICS

Work Codes	C9857 Low Voltage Electrical Systems; E4890 COMMUNICATIONS SERVICES; I7374 Intelligent Transportation Systems (ITS);
Licenses	A General Engineering Contractor; B General Building Contractor; C07 Low Voltage Systems Contractor; C10 Electrical Contractor;
Trucks	
Gender	M
Ethnicity	HISPANIC
Firm Type	DBE

Firm ID	39655
Firm/DBA Name	CAL VALLEY CONSTRUCTION, INC.
Address Line1	6275 W. BULLARD
Address Line2	
City	FRESNO
State	CA
Zip Code1	93722
Zip Code2	
Mailing Address Line1	
Mailing Address Line2	
Mailing City	
Mailing State	
Mailing Zip Code1	
Mailing Zip Code2	
Certification Type	DBE
EMail	shelleya@calvalleyconstruction.com
Contact Name	SHELLEY AVILA
Area Code	(559)
Phone Number	274-0300
Fax Area Code	(559)
Fax Phone Number	274-0311
Agency Name	CITY OF FRESNO
Counties	10; 15; 16; 20; 22; 24; 27; 28; 34; 39; 40; 42; 44; 54;
Districts	03; 04; 05; 06; 10;
DBE NAICS	237310; 237990; 425120;

ACDBE NAICS

Work Codes	C1901 ROADWAY EXCAVATION; C1910 GRADING; C1920 STRUCTURE EXCAVATION; C1930 STRUCTURE BACKFILL; C1980 IMPORTED BORROW; C2501 AGGREGATE SUBBASE; C2602 AGGREGATE BASE; C3901 ASPHALT CONCRETE;
Licenses	A General Engineering Contractor;
Trucks	
Gender	F
Ethnicity	CAUCASIAN
Firm Type	DBE

Firm ID	31277
Firm/DBA Name	CALIFORNIA PROFESSIONAL ELECTRICAL ENGINEERING
Address Line1	929 OTTERBEIN AVENUE, UNIT E
Address Line2	
City	LA PUENTE
State	CA
Zip Code1	91748
Zip Code2	
Mailing Address Line1	
Mailing Address Line2	
Mailing City	
Mailing State	
Mailing Zip Code1	
Mailing Zip Code2	
Certification Type	DBE
EMail	van@cpengineeringinc.com
Contact Name	VAN TAN NGUYEN
Area Code	(626)
Phone Number	810-1338
Fax Area Code	(626)
Fax Phone Number	810-1322
Agency Name	DEPARTMENT OF TRANSPORTATION
Counties	10; 15; 19; 30; 33; 36; 37;
Districts	06; 07; 08; 11; 12;
DBE NAICS	237310; 238210;

ACDBE NAICS

Work Codes	C8501 PAVEMENT MARKING; C8602 SIGNAL & LIGHTING; C8603 SIGNAL; C8604 LIGHTING; C8608 DETECTOR; C8611 RAMP METERING SYSTEM;
Licenses	A General Engineering Contractor; C10 Electrical Contractor;
Trucks	
Gender	M
Ethnicity	ASIAN PACIFIC
Firm Type	DBE

Firm ID	39528
Firm/DBA Name	CE GREEN INC.
Address Line1	6105 MAIN AVENUE
Address Line2	
City	ORANGEVALE
State	CA
Zip Code1	95662
Zip Code2	
Mailing Address Line1	6105 MAIN AVENUE
Mailing Address Line2	
Mailing City	ORANGEVALE
Mailing State	CA

Mailing Zip Code1	95662
Mailing Zip Code2	
Certification Type	DBE
EMail	carole@cegreeninc.com
ontact Name	CAROLE E. GREEN
Area Code	(916)
Phone Number	365-4925
Fax Area Code	(916)
Fax Phone Number	583-7504
Agency Name	DEPARTMENT OF TRANSPORTATION
Counties	01; 02; 03; 04; 05; 06; 07; 08; 09; 10; 11; 12; 13; 14; 15; 16; 17; 18; 19; 20; 21; 22; 23; 24; 25; 26; 27; 28; 29; 30; 31; 32; 33; 34; 35; 36; 37; 38; 39; 40; 41; 42; 43; 44; 45; 46; 47; 48; 49; 50; 51; 52; 53; 54; 55; 56; 57; 58;
Districts	01; 02; 03; 04; 05; 06; 07; 08; 09; 10; 11; 12;
DBE NAICS	237310; 238110; 238290; 238990;
ACDBE NAICS	
Work Codes	C5110 CONCRETE SURFACE FINISH; C9846 ADDITIONS, ALTERATIONS OR REPAIRS;
Licenses	A General Engineering Contractor; B General Building Contractor; C08 Concrete Contractor; D64 Nonspecialized; HAZ Hazardous Waste;
Trucks	
Gender	F
Ethnicity	CAUCASIAN
Firm Type	DBE

Firm ID	40089
Firm/DBA Name	CINDY TRUMP INC DBA LINDY'S COLD PLANING
Address Line1	625 S. MOUNTAIN VIEW
\ddress Line2	
.ity	LA HABRA
State	CA
Zip Code1	90631
Zip Code2	
Mailing Address Line1	
Mailing Address Line2	
Mailing City	
Mailing State	
Mailing Zip Code1	
Mailing Zip Code2	
Certification Type	DBE
EMail	
Contact Name	null null
Area Code	( )
Phone Number	
Fax Area Code	( )
Fax Phone Number	
Agency Name	LOS ANGELES COUNTY METRO TRANSPORTATION AUTHORITY (MTA)
Counties	10; 13; 14; 15; 19; 27; 29; 30; 33; 34; 35; 36; 37; 40; 42; 50; 53; 54; 55;
Districts	02; 03; 05; 06; 07; 08; 09; 10; 11; 12;
DBE NAICS	237310; 237990; 238910;
ACDBE NAICS	
Work Codes	C1531 PLANE ASPHALT CONCRETE; C1901 ROADWAY EXCAVATION; C2201 FINISHING ROADWAY; C2401 LIME TREATMENT; C3901 ASPHALT CONCRETE; C3910 PAVING ASPHALT (ASPHALT CONCRETE); C3990 RECYCLE, RECLAIM ASPHALT CONCRETE; C4201 GROOVE & GRIND PAVEMENT; C9903 CONSTRUCTION CLEAN UP; C9905 CUTTING;
Licenses	A General Engineering Contractor;

Trucks	
Gender	F
Ethnicity	CAUCASIAN
Firm Type	DBE

Firm ID	33473
Firm/DBA Name	CMC TRAFFIC CONTROL SPECIALIST
Address Line1	3450 THIRD STREET, UNIT 3 G
Address Line2	
City	SAN FRANCISCO
State	CA
Zip Code1	94124
Zip Code2	
Mailing Address Line1	
Mailing Address Line2	
Mailing City	
Mailing State	
Mailing Zip Code1	
Mailing Zip Code2	
Certification Type	DBE
EMail	
Contact Name	null CRYSTAL MIKS
Area Code	(415)
Phone Number	206-1700
Fax Area Code	(415)
Fax Phone Number	206-1711
Agency Name	SAN FRANCISCO MUNICIPAL TRANSPORTATION AGENCY
Counties	00;
Districts	00;
DBE NAICS	238990;

ACDBE NAICS

Work Codes	C1201 TRAFFIC CONTROL SYSTEM;
Licenses	A General Engineering Contractor; C31 Construction Zone Traffic Control Contractor;
Trucks	
Gender	F
Ethnicity	CAUCASIAN
Firm Type	DBE

Firm ID	27356
Firm/DBA Name	COLEMAN CONSTRUCTION
Address Line1	1973 W 48TH STREET
Address Line2	
City	LOS ANGELES
State	CA
Zip Code1	90062
Zip Code2	2104
Mailing Address Line1	1973 W 48TH STREET
Mailing Address Line2	
Mailing City	LOS ANGELES
Mailing State	CA
Mailing Zip Code1	90062
Mailing Zip Code2	2104
Certification Type	DBE
EMail	cjohnson@coleman.com
Contact Name	SHARON COLEMAN
Area Code	(323)
Phone Number	295-5484

Fax Area Code	(213)
Fax Phone Number	295-1199
Agency Name	CITY OF LOS ANGELES
Counties	01; 02; 03; 04; 05; 06; 07; 08; 09; 10; 11; 12; 13; 14; 15; 16; 17; 18; 19; 20; 21; 22; 23; 24; 25; 26; 27; 28; 29; 30; 31; 32; 33; 34; 35; 36; 37; 38; 39; 40; 41; 42; 43; 44; 45; 46; 47; 48; 49; 50; 51; 52; 53; 54; 55; 56; 57; 58;
Districts	01; 02; 03; 04; 05; 06; 07; 08; 09; 10; 11; 12;
DBE NAICS	236115; 236116; 236118; 236210; 236220; 237110; 237310; 237990; 238130; 238350;

ACDBE NAICS

Work Codes	C8770 CONSTRUCTION MANAGEMENT;
Licenses	A General Engineering Contractor; B General Building Contractor;
Trucks	
Gender	F
Ethnicity	BLACK
Firm Type	DBE

Firm ID	40570
Firm/DBA Name	COMBINED EFFORT INC
Address Line1	17517 WILD OAK DRIVE
Address Line2	
City	JAMESTOWN
State	CA
Zip Code1	95327
Zip Code2	
Mailing Address Line1	PO BOX 2465
Mailing Address Line2	
Mailing City	MONTEREY
Mailing State	CA
Mailing Zip Code1	93942
Mailing Zip Code2	
Certification Type	DBE
EMail	cbrandt@combined-effort.us
Contact Name	CHERYL BRANDT
Area Code	(800)
Phone Number	728-1100
Fax Area Code	(800)
Fax Phone Number	831-1786
Agency Name	DEPARTMENT OF TRANSPORTATION
Counties	01; 02; 03; 04; 05; 06; 07; 08; 09; 10; 11; 12; 13; 14; 15; 16; 17; 18; 19; 20; 21; 22; 23; 24; 25; 26; 27; 28; 29; 30; 31; 32; 33; 34; 35; 36; 37; 38; 39; 40; 41; 42; 43; 44; 45; 46; 47; 48; 49; 50; 51; 52; 53; 54; 55; 56; 57; 58;
Districts	01; 02; 03; 04; 05; 06; 07; 08; 09; 10; 11; 12;
DBE NAICS	236220; 237990; 562910;

ACDBE NAICS

Work Codes	C1970 EMBANKMENT CONSTRUCTION; C1980 IMPORTED BORROW; C8770 CONSTRUCTION MANAGEMENT; C9869 ASBESTOS REMOVAL/ABATEMENT;
Licenses	A General Engineering Contractor; HAZ Hazardous Waste;
Trucks	
Gender	F
Ethnicity	CAUCASIAN
Firm Type	DBE

Firm ID	38004
Firm/DBA Name	CONSTRUCTION INSPECTION SPECIALISTS
Address Line1	8499 OLD REDWOOD HIGHWAY, SUITE #206
Address Line2	

City	WINDSOR
State	CA
Zip Code1	95492
Zip Code2	
Mailing Address Line1	
Mailing Address Line2	
Mailing City	
Mailing State	
Mailing Zip Code1	
Mailing Zip Code2	
Certification Type	DBE
EMail	steve@cisinspects.com
Contact Name	HARRY STEVEN CLARK
Area Code	(707)
Phone Number	838-1679
Fax Area Code	(707)
Fax Phone Number	838-1689
Agency Name	BAY AREA RAPID TRANSIT DISTRICT (BART)
Counties	00;
Districts	00;
DBE NAICS	237110; 237310; 237990; 541330; 541350; 541370; 541618; 541690; 541990;

ACDBE NAICS

Work Codes	C0612 SAFETY SUPPLIER; C0700 CONSTRUCTION STAKING SUPPLIER; C8700 CONSULTANT, NON ENGINEERING; C8770 CONSTRUCTION MANAGEMENT;
Licenses	A General Engineering Contractor; B General Building Contractor;
Trucks	
Gender	M
Ethnicity	NATIVE AMERICAN
Firm Type	DBE

Firm ID	41616
Firm/DBA Name	CONTERRA GROUP, INC.
Address Line1	1470 N. BLACKSTONE
Address Line2	
City	FRESNO
State	CA
Zip Code1	93703
Zip Code2	
Mailing Address Line1	
Mailing Address Line2	
Mailing City	
Mailing State	
Mailing Zip Code1	
Mailing Zip Code2	
Certification Type	DBE
EMail	jherrera@conterragroup.net
Contact Name	JAVIER C. HERRERA
Area Code	(559)
Phone Number	395-3183
Fax Area Code	(559)
Fax Phone Number	442-3501
Agency Name	CITY OF FRESNO
Counties	10; 16; 20; 24; 54;
Districts	06; 10;
DBE NAICS	237110; 237310; 237990; 238910;

ACDBE NAICS

Work Codes	C1601 CLEARING & GRUBBING; C1901 ROADWAY EXCAVATION; C1910 GRADING; C1930 STRUCTURE BACKFILL; C2201 FINISHING ROADWAY; C2501 AGGREGATE SUBBASE; C2602 AGGREGATE BASE; C3901 ASPHALT CONCRETE; C7000 PLASTIC PIPE; C7301 CONCRETE CURB & SIDEWALK - MISC;
Licenses	A General Engineering Contractor;
Trucks	
Gender	M
Ethnicity	HISPANIC
Firm Type	DBE

Firm ID	40072
Firm/DBA Name	COOKS AND SON INC.
Address Line1	4134 ODIE LANE
Address Line2	
City	SANTA MARIA
State	CA
Zip Code1	93455
Zip Code2	
Mailing Address Line1	4134 ODIE LANE
Mailing Address Line2	
Mailing City	SANTA MARIA
Mailing State	CA
Mailing Zip Code1	93455
Mailing Zip Code2	
Certification Type	DBE
EMail	cooks_son@mail.com
Contact Name	CHARLES E. HENDERSON JR.
Area Code	(805)
Phone Number	934-2705
Fax Area Code	(805)
Fax Phone Number	937-5473
Agency Name	DEPARTMENT OF TRANSPORTATION
Counties	05; 07; 09; 10; 12; 15; 16; 19; 20; 23; 24; 27; 28; 29; 30; 31; 33; 34; 35; 36; 37; 38; 40; 41; 42; 43; 44; 46; 48; 49; 50; 54; 56;
Districts	01; 03; 04; 05; 06; 07; 08; 10; 11; 12;
DBE NAICS	237110; 237310; 238910;
ACDBE NAICS	
Work Codes	C1601 CLEARING & GRUBBING; C1701 DEVELOP WATER SUPPLY; C1901 ROADWAY EXCAVATION; C1910 GRADING; C1940 DITCHES EXCAVATION; C2501 AGGREGATE SUBBASE; C2602 AGGREGATE BASE; C3940 PLACE ASPHALT CONCRETE DIKE & MISC;
Licenses	A General Engineering Contractor;
Trucks	
Gender	M
Ethnicity	BLACK
Firm Type	DBE

Firm ID	39818
Firm/DBA Name	COOPER ZIETZ ENGINEERS, INC
Address Line1	620 SW FIFTH AVENUE, SUITE 1225
Address Line2	
City	PORTLAND
State	OR
Zip Code1	97204
Zip Code2	
Mailing Address Line1	
Mailing Address Line2	
Mailing City	

Mailing State	
Mailing Zip Code1	
Mailing Zip Code2	
Certification Type	DBE
EMail	herbf@coopercm.com
Contact Name	HERBERT J. FRICKE
Area Code	(503)
Phone Number	253-5429
Fax Area Code	(503)
Fax Phone Number	253-5412
Agency Name	DEPARTMENT OF TRANSPORTATION
Counties	01; 02; 03; 04; 05; 06; 07; 08; 09; 10; 11; 12; 13; 14; 15; 16; 17; 18; 19; 20; 21; 22; 23; 24; 25; 26; 27; 28; 29; 30; 31; 32; 33; 34; 35; 36; 37; 38; 39; 40; 41; 42; 43; 44; 45; 46; 47; 48; 49; 50; 51; 52; 53; 54; 55; 56; 57; 58;
Districts	01; 02; 03; 04; 05; 06; 07; 08; 09; 10; 11; 12;
DBE NAICS	236115; 236210; 236220; 237110; 237210; 237310; 237990; 541330; 541350; 541611; 541618; 541620; 541690;

ACDBE NAICS

Work Codes	C8713 CONSULTANT, ENVIRONMENTAL; C8715 CONSULTANT, ENGINEERING; C8771 Construction Management - Commercial and Institutional Building Construction; C8772 Construction Management - Institutional Building Construction; C8773 Construction Management - Highway, Street and Bridge Construction; C8774 Construction Management - Land Subdivision; C8776 Construction Management - Other Heavy and Civil Construction; C8778 Construction Management - Water and Sewer Line and Related Structure Construction; C8793 Environmental - Environmental Impact Assessment;
Licenses	A General Engineering Contractor; EC Civil Engineer;
Trucks	
Gender	M
Ethnicity	NATIVE AMERICAN
Firm Type	DBE

Firm ID	35805
Firm/DBA Name	COPPERTOP ENTERPRISES, INC.
Address Line1	2035 PLACENTIA AVENUE, UNIT F
Address Line2	
City	COSTA MESA
State	CA
Zip Code1	92627
Zip Code2	
Mailing Address Line1	2035 PLACENTIA AVE, UNIT F
Mailing Address Line2	
Mailing City	COSTA MESA
Mailing State	CA
Mailing Zip Code1	92627
Mailing Zip Code2	
Certification Type	DBE
EMail	lindab@coppertopent.com
Contact Name	DEBORAH L. WILLIAMS
Area Code	(714)
Phone Number	545-4814
Fax Area Code	(714)
Fax Phone Number	545-4838
Agency Name	DEPARTMENT OF TRANSPORTATION
Counties	01; 02; 03; 04; 05; 06; 07; 08; 09; 10; 11; 12; 13; 14; 15; 16; 17; 18; 19; 20; 21; 22; 23; 24; 25; 26; 27; 28; 29; 30; 31; 32; 33; 34; 35; 36; 37; 38; 39; 40; 41; 42; 43; 44; 45; 46; 47; 48; 49; 50; 51; 52; 53; 54; 55; 56; 57; 58;
Districts	01; 02; 03; 04; 05; 06; 07; 08; 09; 10; 11; 12;
DBE NAICS	236220;

ACDBE NAICS

Work Codes	C9801 BUILDING CONSTRUCTION;
Licenses	A General Engineering Contractor; B General Building Contractor;
Trucks	
ɘnder	F
ɛthnicity	CAUCASIAN
Firm Type	DBE

Firm ID	41764
Firm/DBA Name	CORNEJO CONSTRUCTION COMPANY
Address Line1	809 EAST CARILLO ST.
Address Line2	
City	SANTA BARBARA
State	CA
Zip Code1	93103
Zip Code2	
Mailing Address Line1	P.O. BOX 22302
Mailing Address Line2	
Mailing City	SANTA BARBARA
Mailing State	CA
Mailing Zip Code1	93121
Mailing Zip Code2	
Certification Type	DBE
EMail	jcornejo@cornejo.com
Contact Name	JESUS CORNEJO
Area Code	(805)
Phone Number	965-6404
Fax Area Code	(805)
Fax Phone Number	965-7644
`gency Name	DEPARTMENT OF TRANSPORTATION
Counties	01; 02; 03; 04; 05; 06; 07; 08; 09; 10; 11; 12; 13; 14; 15; 16; 17; 18; 19; 20; 21; 22; 23; 24; 25; 26; 27; 28; 29; 30; 31; 32; 33; 34; 35; 36; 37; 38; 39; 40; 41; 42; 43; 44; 45; 46; 47; 48; 49; 50; 51; 52; 53; 54; 55; 56; 57; 58;
Districts	01; 02; 03; 04; 05; 06; 07; 08; 09; 10; 11; 12;
DBE NAICS	236118; 236210; 236220; 237110; 237130;
ACDBE NAICS	
Work Codes	C8770 CONSTRUCTION MANAGEMENT; C8771 Construction Management - Commercial and Institutional Building Construction; C8772 Construction Management - Institutional Building Construction; C8777 Construction Management - Power and Communication Line and Related Structure Construction; C8778 Construction Management - Water and Sewer Line and Related Structure Construction; C8801 Construction Project and Document Control; C8802 Construction Scheduling;
Licenses	A General Engineering Contractor; B General Building Contractor; C08 Concrete Contractor; C33 Painting and Decorating Contractor; C54 Tile Contractor (Ceramic and Mosaic); HAZ Hazardous Waste;
Trucks	
Gender	M
Ethnicity	HISPANIC
Firm Type	DBE

Firm ID	40634
Firm/DBA Name	CRE8IVE ENGINEERING INC
Address Line1	77-770 COUNTRY CLUB DR,. SUITE D
Address Line2	
City	PALM DESERT
`tate	CA
_ip Code1	92211
Zip Code2	
Mailing Address Line1	
Mailing Address Line2	

Mailing City	
Mailing State	
Mailing Zip Code1	
Mailing Zip Code2	
Certification Type	DBE
EMail	cre8iveEngineering@gmail.com
Contact Name	REGINA CASTRO
Area Code	(760)
Phone Number	200-8889
Fax Area Code	(760)
Fax Phone Number	200-1116
Agency Name	DEPARTMENT OF TRANSPORTATION
Counties	01; 02; 03; 04; 05; 06; 07; 08; 09; 10; 11; 12; 13; 14; 15; 16; 17; 18; 19; 20; 21; 22; 23; 24; 25; 26; 27; 28; 29; 30; 31; 32; 33; 34; 35; 36; 37; 38; 39; 40; 41; 42; 43; 44; 45; 46; 47; 48; 49; 50; 51; 52; 53; 54; 55; 56; 57; 58;
Districts	01; 02; 03; 04; 05; 06; 07; 08; 09; 10; 11; 12;
DBE NAICS	237110; 237310; 238910;

ACDBE NAICS

Work Codes	C3910 PAVING ASPHALT (ASPHALT CONCRETE); C9850 PLUMBING; C9851 FIRE PROTECTION CONTRACTOR;
Licenses	A General Engineering Contractor; C16 Fire Protection Contractor; C36 Plumbing Contractor;
Trucks	
Gender	M
Ethnicity	HISPANIC
Firm Type	DBE

Firm ID	38678
Firm/DBA Name	CRF WESTERN, INC.
Address Line1	23000 MEADOW LANE, SUITE B
Address Line2	
City	TWAIN HARTE
State	CA
Zip Code1	95383
Zip Code2	
Mailing Address Line1	P.O. BOX 688
Mailing Address Line2	
Mailing City	TWAIN HARTE
Mailing State	CA
Mailing Zip Code1	95383
Mailing Zip Code2	
Certification Type	DBE
EMail	dan@westernmpc.com
Contact Name	DANIEL GARCIA
Area Code	(209)
Phone Number	728-1300
Fax Area Code	(209)
Fax Phone Number	728-1310
Agency Name	SAN MATEO COUNTY TRANSIT DISTRICT (SAMTRANS)/JPB
Counties	00;
Districts	00;
DBE NAICS	237130;

ACDBE NAICS

Work Codes	C8903 ELECTRICAL;
Licenses	A General Engineering Contractor; C10 Electrical Contractor;
Trucks	
Gender	M

Ethnicity	HISPANIC
Firm Type	DBE

Firm ID	2311
Firm/DBA Name	CROOKS TRUCK & EQUIPMENT RENTAL, INC.
Address Line1	4538 BLANCA DR.
Address Line2	
City	CYPRESS
State	CA
Zip Code1	90630
Zip Code2	
Mailing Address Line1	P.O. BOX 831
Mailing Address Line2	
Mailing City	CYPRESS
Mailing State	CA
Mailing Zip Code1	90630
Mailing Zip Code2	
Certification Type	DBE
EMail	crookstrucking@sbcglobal.net
Contact Name	SANDRA CROOKS
Area Code	(714)
Phone Number	821-3756
Fax Area Code	(714)
Fax Phone Number	821-4730
Agency Name	DEPARTMENT OF TRANSPORTATION
Counties	00;
Districts	00;
DBE NAICS	238910; 532310;

CDBE NAICS

Work Codes	C1601 CLEARING & GRUBBING; C1901 ROADWAY EXCAVATION; C1920 STRUCTURE EXCAVATION; C1930 STRUCTURE BACKFILL; C1940 DITCHES EXCAVATION; C9980 DEMOLITION; I7350 MISC EQUIPMENT RENTAL & LEASING;
Licenses	A General Engineering Contractor;
Trucks	
Gender	F
Ethnicity	CAUCASIAN
Firm Type	DBE

Firm ID	34661
Firm/DBA Name	DAWSON MAULDIN CONSTRUCTION, INC.
Address Line1	9842 HOT SPRINGS DR.
Address Line2	
City	HUNTINGTON BEACH
State	CA
Zip Code1	92646
Zip Code2	
Mailing Address Line1	PO BOX 8397
Mailing Address Line2	
Mailing City	HUNTINGTON BEACH
Mailing State	CA
Mailing Zip Code1	92615
Mailing Zip Code2	
Certification Type	DBE
EMail	sandradawson@dawson-mauldin.com
Contact Name	SANDRA DAWSON
Area Code	(714)
Phone Number	378-1533

Fax Area Code	(714)
Fax Phone Number	378-1534
Agency Name	DEPARTMENT OF TRANSPORTATION
Counties	10; 14; 16; 20; 27; 35; 54;
Districts	05; 06; 09;
DBE NAICS	237310;

ACDBE NAICS

Work Codes	C1601 CLEARING & GRUBBING; C1901 ROADWAY EXCAVATION; C1910 GRADING; C1970 EMBANKMENT CONSTRUCTION; C3910 PAVING ASPHALT (ASPHALT CONCRETE);
Licenses	A General Engineering Contractor; EC Civil Engineer;
Trucks	
Gender	F
Ethnicity	CAUCASIAN
Firm Type	DBE

Firm ID	34801
Firm/DBA Name	DEENSGROUP CONSTRUCTION
Address Line1	2175 THE ALAMEDA, SUITE 100
Address Line2	
City	SAN JOSE
State	CA
Zip Code1	95126
Zip Code2	
Mailing Address Line1	
Mailing Address Line2	
Mailing City	
Mailing State	
Mailing Zip Code1	
Mailing Zip Code2	
Certification Type	DBE
EMail	deensgroup@aol.com
Contact Name	HAJAAH M. DEEN
Area Code	(408)
Phone Number	345-3860
Fax Area Code	(408)
Fax Phone Number	345-3869
Agency Name	SANTA CLARA VALLEY TRANSPDRTATION AUTHORITY (VTA)
Counties	00;
Districts	00;
DBE NAICS	237110; 237130; 237310; 237990;

ACDBE NAICS

Work Codes	C1940 DITCHES EXCAVATION; C5150 CORE CONCRETE - REPAIR BRIDGE DECK; C8720 CIVIL ENGINEERING; E4890 COMMUNICATIONS SERVICES;
Licenses	A General Engineering Contractor; EC Civil Engineer;
Trucks	
Gender	M
Ethnicity	ASIAN SUBCONTINENT
Firm Type	DBE

Firm ID	31021
Firm/DBA Name	DELTECH ENGINEERING, INC
Address Line1	4913 E. GERDA DRIVE
Address Line2	
City	ANAHEIM
State	CA

Zip Code1	92807
Zip Code2	
Mailing Address Line1	P.O. BOX 6630
Mailing Address Line2	
Mailing City	ORANGE
Mailing State	CA
Mailing Zip Code1	92863
Mailing Zip Code2	
Certification Type	DBE
EMail	abili@deltechengineeringinc.com
Contact Name	(MR.) EBBITEANGA I. ABILI
Area Code	(714)
Phone Number	495-9755
Fax Area Code	(714)
Fax Phone Number	384-4594
Agency Name	DEPARTMENT OF TRANSPORTATION
Counties	01; 10; 13; 15; 19; 24; 30; 33; 34; 36; 37; 38; 39; 40; 42; 43; 56; 57;
Districts	03; 04; 05; 06; 07; 08; 10; 11; 12;
DBE NAICS	237110; 237310; 237990; 541620; 541990; 562112; 562211; 562910;
ACDBE NAICS	
Work Codes	C1901 ROADWAY EXCAVATION; C2065 IRRIGATION SYSTEM; C3910 PAVING ASPHALT (ASPHALT CONCRETE); C8707 FEASIBILITY STUDIES; C8730 SAFETY STUDIES; C9632 HAZARDOUS SUBSTANCE REMOVAL; C9869 ASBESTOS REMOVAL/ABATEMENT; E4954 HAZARDOUS WASTE COLLECTION AND DISPOSAL;
Licenses	A General Engineering Contractor; HAZ Hazardous Waste;
Trucks	
Gender	M
Ethnicity	BLACK
Firm Type	DBE

Firm ID	39195
Firm/DBA Name	DERRICKSON PIKE, INC.
Address Line1	125 MASON CIRCLE, SUITE G
Address Line2	
City	CONCORD
State	CA
Zip Code1	94564
Zip Code2	
Mailing Address Line1	
Mailing Address Line2	
Mailing City	
Mailing State	
Mailing Zip Code1	
Mailing Zip Code2	
Certification Type	DBE
EMail	jspike@derricksonpikce.com
Contact Name	JEFFREY PIKE
Area Code	(925)
Phone Number	326-4960
Fax Area Code	( )
Fax Phone Number	
Agency Name	CITY OF FRESNO
Counties	01; 07; 10; 15; 20; 21; 22; 23; 24; 34; 38; 39; 41; 43; 44; 48; 49; 50; 55; 57; 58;
Districts	01; 03; 04; 05; 06; 10;
DBE NAICS	236210 Construction Management; 236220 Construction Management; 237110 Construction Management; 237120 Construction Management; 237310 Construction Management; 237990 Construction Management; 238110; 238130; 541620; 562910;

ACDBE NAICS

Work Codes	C8771 Construction Management - Commercial and Institutional Building Construction; C8772 Construction Management - Institutional Building Construction; C8773 Construction Management - Highway, Street and Bridge Construction; C8775 Construction Management - Oil and Gas Pipeline and Releted Structure Construction; C8776 Construction Management - Other Heavy and Civil Construction; C8778 Construction Management - Water and Sewer Line and Related Structure Construction; C8784 Engineering - Value; C8791 Environmental - Air Quality; C8794 Environmental - Water Quality; C8800 Construction Estimating and Costing; C8801 Construction Project and Document Control; C8802 Construction Scheduling;
Licenses	A General Engineering Contractor; B General Building Contractor; C08 Concrete Contractor;
Trucks	
Gender	M
Ethnicity	NATIVE AMERICAN
Firm Type	DBE

Firm ID	7106
Firm/DBA Name	DILLARD ENVIRONMENTAL SERVICES
Address Line1	3120 CAMINO DIABLO RD
Address Line2	
City	BYRON
State	CA
Zip Code1	94514
Zip Code2	
Mailing Address Line1	P. O. BOX 579
Mailing Address Line2	
Mailing City	BYRON
Mailing State	CA
Mailing Zip Code1	94514
Mailing Zip Code2	
Certification Type	DBE
EMail	patriciad@dillardenv.com
Contact Name	PATRICIA DILLARD
Area Code	(925)
Phone Number	634-6850
Fax Area Code	(925)
Fax Phone Number	634-6858
Agency Name	DEPARTMENT OF TRANSPORTATION
Counties	01; 02; 03; 04; 05; 06; 07; 08; 09; 10; 11; 12; 13; 14; 15; 16; 17; 18; 19; 20; 21; 22; 23; 24; 25; 26; 27; 28; 29; 30; 31; 32; 33; 34; 35; 36; 37; 38; 39; 40; 41; 42; 43; 44; 45; 46; 47; 48; 49; 50; 51; 52; 53; 54; 55; 56; 57; 58;
Districts	01; 02; 03; 04; 05; 06; 07; 08; 09; 10; 11; 12;
DBE NAICS	238910; 484110; 562112; 562211;

ACDBE NAICS

Work Codes	C1601 CLEARING & GRUBBING; C1901 ROADWAY EXCAVATION; C1920 STRUCTURE EXCAVATION; C1930 STRUCTURE BACKFILL; C1940 DITCHES EXCAVATION; C9602 BOTTOM DUMP TRUCKING; C9605 FLAT BED TRUCKING; C9632 HAZARDOUS SUBSTANCE REMOVAL; C9774 TRUCKER; C9980 DEMOLITION; E4954 HAZARDOUS WASTE COLLECTION AND DISPOSAL;
Licenses	A General Engineering Contractor;
Trucks	FOR HIRE - 21;
Gender	F
Ethnicity	CAUCASIAN
Firm Type	DBE

Firm ID	30081
Firm/DBA Name	DOD CONSTRUCTION
Address Line1	3501 EDISON HIGHWAY
Address Line2	
City	BAKERSFIELD

State	CA
Zip Code1	93307
Zip Code2	
Mailing Address Line1	PO BOX 70187
Mailing Address Line2	
Mailing City	BAKERSFIELD
Mailing State	CA
Mailing Zip Code1	93387
Mailing Zip Code2	
Certification Type	DBE
EMail	derrickd@dodconstruction.com, dodconstruction@yahoo.com
Contact Name	DERRICK DICKERSON
Area Code	(661)
Phone Number	366-8000
Fax Area Code	(661)
Fax Phone Number	366-8001
Agency Name	DEPARTMENT OF TRANSPORTATION
Counties	01; 02; 03; 04; 05; 06; 07; 08; 10; 11; 12; 13; 14; 15; 16; 17; 18; 19; 20; 21; 22; 23; 24; 25; 26; 27; 28; 29; 30; 31; 32; 33; 34; 35; 36; 37; 38; 39; 40; 41; 42; 43; 44; 45; 46; 47; 48; 49; 50; 51; 52; 53; 54; 55; 56; 57; 58;
Districts	01; 02; 03; 04; 05; 06; 07; 08; 09; 10; 11; 12;
DBE NAICS	236115; 236118; 236210; 237310; 238110; 238120; 238140; 238310; 238350; 238990;
ACDBE NAICS	
Work Codes	C5501 STEEL STRUCTURES; C5570 STEEL CRIB WALL; C9801 BUILDING CONSTRUCTION; C9810 SMALL STRUCTURES; C9822 CARPENTRY; C9827 DRYWALL CONSTRUCTION; C9829 RETAINER WALLS; C9836 PLASTERING; C9842 MASONRY; C9868 INSULATION; C9874 HARDWARE (ROUGH); C9876 HARDWARE (FINISH);
Licenses	A General Engineering Contractor; B General Building Contractor; C08 Concrete Contractor;
Trucks	
Gender	M
Ethnicity	BLACK
Firm Type	DBE

Firm ID	38712
Firm/DBA Name	DREAMBUILDER CONSTRUCTION CORP
Address Line1	1324 E LAWSON LN.
Address Line2	
City	PLACENTIA
State	CA
Zip Code1	92870
Zip Code2	
Mailing Address Line1	
Mailing Address Line2	
Mailing City	
Mailing State	
Mailing Zip Code1	
Mailing Zip Code2	
Certification Type	DBE
EMail	alex.singh@dreambuildercorp.com
Contact Name	ANURAG SINGH
Area Code	(714)
Phone Number	646-3697
Fax Area Code	(714)
Fax Phone Number	646-3698
Agency Name	DEPARTMENT OF TRANSPORTATION
Counties	01; 02; 03; 04; 05; 06; 07; 08; 09; 10; 11; 12; 13; 14; 15; 16; 17; 18; 19; 20; 21; 22; 23; 24; 25; 26; 27; 28; 29; 30; 31; 32; 33; 34; 35; 36; 37; 38; 39; 40; 41; 42; 43; 44; 45; 46; 47; 48; 49; 50; 51; 52; 53; 54; 55; 56; 57; 58;
Districts	01; 02; 03; 04; 05; 06; 07; 08; 09; 10; 11; 12;

DBE NAICS	237110; 237310; 238110; 238910;
ACDBE NAICS	
Work Codes	C1200 CONSTRUCTION AREA SIGNS; C1201 TRAFFIC CONTROL SYSTEM; C1531 PLANE ASPHALT CONCRETE; C1601 CLEARING & GRUBBING; C1701 DEVELOP WATER SUPPLY; C1901 ROADWAY EXCAVATION; C2065 IRRIGATION SYSTEM; C3901 ASPHALT CONCRETE; C3910 PAVING ASPHALT (ASPHALT CONCRETE); C5105 MINOR CONCRETE STRUCTURE; C6200 ALTERNATIVE PIPE CULVERT;
Licenses	A General Engineering Contractor;
Trucks	
Gender	M
Ethnicity	ASIAN SUBCONTINENT
Firm Type	DBE

Firm ID	24176
Firm/DBA Name	EAGLE ENGINEERING AND CONSTRUCTION, INC
Address Line1	1175 PALOMAR DRIVE
Address Line2	
City	REDWOOD CITY
State	CA
Zip Code1	94062
Zip Code2	3834
Mailing Address Line1	
Mailing Address Line2	
Mailing City	
Mailing State	
Mailing Zip Code1	
Mailing Zip Code2	
Certification Type	DBE
EMail	brooks.curtis@att.net
Contact Name	CURTIS BROOKS
Area Code	(650)
Phone Number	367-8000
Fax Area Code	(650)
Fax Phone Number	367-8282
Agency Name	DEPARTMENT OF TRANSPORTATION
Counties	00;
Districts	00;
DBE NAICS	221119; 237990; 238110; 238120; 238910; 333611; 517110;
ACDBE NAICS	
Work Codes	C1200 CONSTRUCTION AREA SIGNS; C1575 REMOVE BRIDGE ITEM; C1580 MODIFY BRIDGE ITEM; C1601 CLEARING & GRUBBING; C1901 ROADWAY EXCAVATION; C1920 STRUCTURE EXCAVATION; C1930 STRUCTURE BACKFILL; C1940 DITCHES EXCAVATION; C3910 PAVING ASPHALT (ASPHALT CONCRETE); C4010 PORTLAND CEMENT & CONCRETE PAVEMENT; C5501 STEEL STRUCTURES; C5570 STEEL CRIB WALL; C7410 PUMPING PLANT ELECTRICAL EQUIPMENT; C7415 ENGINE GENERATOR SET; C8602 SIGNAL & LIGHTING; C8605 MESSAGE SIGNS, LIGHTING & SIGN ILLUMINATION; C8611 RAMP METERING SYSTEM; C8770 CONSTRUCTION MANAGEMENT; C9858 RESIDENTIAL ELECTRICAL; C9866 HEATING & AIR CONDITIONING; C9980 DEMOLITION; D3510 ENGINES & TURBINES; E4810 TELEPHONE COMMUNICATIONS; E4820 TELEGRAPH & OTHER COMMUNICATIONS; E4910 ELECTRIC SERVICES; E4930 COMBINATION UTILITY SERVICES;
Licenses	A General Engineering Contractor; C07 Low Voltage Systems Contractor; C10 Electrical Contractor; C20 Warm-Air Heating, Ventilation and Air-conditioning Contracto;
Trucks	
Gender	M
Ethnicity	BLACK
Firm Type	DBE

Firm ID	27500
Firm/DBA Name	EAR - ENVIRONMENTAL ASSESSMENT AND REMEDIATION MANAGEMENT,

Address Line1	4097 TRAIL CREEK ROAD
Address Line2	
City	RIVERSIDE
State	CA
Zip Code1	92505
Zip Code2	
Mailing Address Line1	
Mailing Address Line2	
Mailing City	
Mailing State	
Mailing Zip Code1	
Mailing Zip Code2	
Certification Type	DBE
EMail	rpendurthi@earmanagement.com
Contact Name	RAVINDRA PENDURTHI
Area Code	(951)
Phone Number	324-8060
Fax Area Code	(951)
Fax Phone Number	324-8061
Agency Name	LOS ANGELES COUNTY METRO TRANSPORTATION AUTHORITY (MTA)
Counties	00;
Districts	00;
DBE NAICS	236115; 236116; 236220; 237110; 562910;
ACDBE NAICS	
Work Codes	C1601 CLEARING & GRUBBING; C1901 ROADWAY EXCAVATION; C1920 STRUCTURE EXCAVATION; C1930 STRUCTURE BACKFILL; C1940 DITCHES EXCAVATION; C9802 BUILDING CONSTRUCTION; C9980 DEMOLITION;
Licenses	A General Engineering Contractor; B General Building Contractor; C08 Concrete Contractor; C10 Electrical Contractor; C12 Earthwork and Paving Contractor; C20 Warm-Air Heating, Ventilation and Air-conditioning Contracto; C21 Building Moving / Demolition Contractor; C33 Painting and Decorating Contractor; C36 Plumbing Contractor;
Trucks	
Gender	F
Ethnicity	OTHER
Firm Type	DBE

Firm ID	39646
Firm/DBA Name	EDISON CONSTRUCTION, INC.
Address Line1	260 FAIRFAX ROAD
Address Line2	
City	BAKERSFIELD
State	CA
Zip Code1	93307
Zip Code2	
Mailing Address Line1	260 FAIRFAX ROAD
Mailing Address Line2	
Mailing City	BAKERSFIELD
Mailing State	CA
Mailing Zip Code1	93307
Mailing Zip Code2	
Certification Type	DBE
EMail	eci@lightspeed.net
Contact Name	CATHY RAMEY
Area Code	(661)
Phone Number	366-6311
Fax Area Code	(661)
Fax Phone Number	366-0204
Agency Name	DEPARTMENT OF TRANSPORTATION

Counties	01; 10; 15; 19; 20; 21; 22; 23; 24; 27; 29; 30; 32; 33; 34; 35; 36; 37; 38; 39; 40; 41; 42; 43; 44; 45; 46; 54; 56;
Districts	01; 02; 03; 04; 05; 06; 07; 08; 10; 11; 12;
DBE NAICS	237990; 238910;
ACDBE NAICS	
Work Codes	C0651 CONCRETE & CEMENT SUPPLIER; C1601 CLEARING & GRUBBING; C1940 DITCHES EXCAVATION; C9980 DEMOLITION;
Licenses	A General Engineering Contractor; C21 Building Moving / Demolition Contractor;
Trucks	
Gender	F
Ethnicity	NATIVE AMERICAN
Firm Type	DBE

Firm ID	38677
Firm/DBA Name	ENCARNACION GUTIERREZ CONSTRUCTION
Address Line1	290 N. MADISON AVE. #307
Address Line2	
City	PASADENA
State	CA
Zip Code1	91101
Zip Code2	
Mailing Address Line1	
Mailing Address Line2	
Mailing City	
Mailing State	
Mailing Zip Code1	
Mailing Zip Code2	
Certification Type	DBE
EMail	encarnacion.gutierrez@gmail.com
Contact Name	ENCARNACION GUTIERREZ
Area Code	(510)
Phone Number	541-7109
Fax Area Code	( )
Fax Phone Number	
Agency Name	LOS ANGELES COUNTY METRO TRANSPORTATION AUTHORITY (MTA)
Counties	01; 10; 15; 19; 38;
Districts	04; 06; 07;
DBE NAICS	236220; 237990; 423320; 541330; 541340; 541611; 541618;
ACDBE NAICS	
Work Codes	C8715 CONSULTANT, ENGINEERING; C8720 CIVIL ENGINEERING; C8765 DRAFTING; C9802 BUILDING CONSTRUCTION; C9999 BROKER; D3530 CONSTRUCTION & RELATED MACHINERY;
Licenses	A General Engineering Contractor; B General Building Contractor; EC Civil Engineer;
Trucks	
Gender	M
Ethnicity	HISPANIC
Firm Type	DBE

Firm ID	39513
Firm/DBA Name	ERNEST B. DEE
Address Line1	6120 BELFIELD CIR
Address Line2	
City	ELK GROVE
State	CA
Zip Code1	95758
Zip Code2	6212
Mailing Address Line1	

Mailing Address Line2	
Mailing City	
Mailing State	
Mailing Zip Code1	
Mailing Zip Code2	
Certification Type	DBE
EMail	dee4321@frontiernet.net
Contact Name	ERNEST B. DEE
Area Code	(916)
Phone Number	271-0410
Fax Area Code	(916)
Fax Phone Number	691-2127
Agency Name	DEPARTMENT OF TRANSPORTATION
Counties	01; 02; 03; 04; 05; 06; 07; 09; 10; 11; 15; 16; 18; 20; 21; 22; 24; 25; 27; 28; 29; 31; 32; 34; 35; 38; 39; 40; 41; 42; 43; 44; 45; 46; 47; 48; 49; 50; 51; 52; 53; 54; 57; 58;
Districts	02; 03; 04; 05; 06; 10;
DBE NAICS	236220; 237310;

ACDBE NAICS

Work Codes	C1920 STRUCTURE EXCAVATION; C1930 STRUCTURE BACKFILL; C5100 CONCRETE STRUCTURE; C8770 CONSTRUCTION MANAGEMENT; C9801 BUILDING CONSTRUCTION; C9810 SMALL STRUCTURES; C9829 RETAINER WALLS;
Licenses	A General Engineering Contractor; B General Building Contractor;
Trucks	
Gender	M
Ethnicity	BLACK
Firm Type	DBE

Firm ID	35751
Firm/DBA Name	EXARO TECHNOLOGIES CORPORATION
Address Line1	1831 BAYSHORE HWY
Address Line2	
City	BURLINGAME
State	CA
Zip Code1	94010
Zip Code2	
Mailing Address Line1	
Mailing Address Line2	
Mailing City	
Mailing State	
Mailing Zip Code1	
Mailing Zip Code2	
Certification Type	DBE
EMail	hd@exarotec.com
Contact Name	HECTOR DOMINGUEZ
Area Code	(650)
Phone Number	777-4324
Fax Area Code	(650)
Fax Phone Number	777-4326
Agency Name	SAN MATEO COUNTY TRANSIT DISTRICT (SAMTRANS)/JPB
Counties	00;
Districts	00;
DBE NAICS	237110; 237120; 237310; 237990; 238190; 238990; 561990;

CDBE NAICS

Work Codes	C9632 HAZARDOUS SUBSTANCE REMOVAL; C9904 CORING;
Licenses	A General Engineering Contractor; C10 Electrical Contractor; C31 Construction Zone Traffic Control Contractor; HAZ Hazardous Waste;

Trucks	
Gender	M
Ethnicity	HISPANIC
Firm Type	DBE

Firm ID	36272
Firm/DBA Name	EXBON DEVELOPMENT, INC.
Address Line1	13432 ACLARE STREET,
Address Line2	
City	CERRITOS
State	CA
Zip Code1	90703
Zip Code2	
Mailing Address Line1	13432 ACLARE STREET,
Mailing Address Line2	
Mailing City	CERRITOS
Mailing State	CA
Mailing Zip Code1	90703
Mailing Zip Code2	
Certification Type	DBE
EMail	info@exbon.com
Contact Name	JANET LEE
Area Code	(562)
Phone Number	777-8900
Fax Area Code	(562)
Fax Phone Number	777-1888
Agency Name	CITY OF LOS ANGELES
Counties	00;
Districts	00;
DBE NAICS	236115; 236116; 236117; 236118; 236220; 237310; 238130; 238160; 238350; 238390; 238910; 238990
ACDBE NAICS	
Work Codes	C1575 REMOVE BRIDGE ITEM; C1701 DEVELOP WATER SUPPLY; C1901 ROADWAY EXCAVATION; C1910 GRADING; C1920 STRUCTURE EXCAVATION; C1940 DITCHES EXCAVATION; C2065 IRRIGATION SYSTEM; C8710 ENGINEERING; C9801 BUILDING CONSTRUCTION; C9822 CARPENTRY; C9837 ROOFING; C9846 ADDITIONS, ALTERATIONS OR REPAIRS; E4940 WATER SUPPLY;
Licenses	A General Engineering Contractor; B General Building Contractor; C39 Roofing Contractor;
Trucks	
Gender	F
Ethnicity	ASIAN PACIFIC
Firm Type	DBE

Firm ID	36850
Firm/DBA Name	FALCON BUILDERS & DEVELOPERS INC
Address Line1	5070 N. SIXTH STREET, SUITE 185
Address Line2	
City	FRESNO
State	CA
Zip Code1	93710
Zip Code2	
Mailing Address Line1	5070 N. SIXTH STREET, SUITE 185
Mailing Address Line2	
Mailing City	FRESNO
Mailing State	CA
Mailing Zip Code1	93710
Mailing Zip Code2	
Certification Type	DBE
EMail	johnf@falconbuildersanddevelopers.com
Contact Name	JOHN FALCON

Area Code	(559)
Phone Number	226-1994
Fax Area Code	(559)
Fax Phone Number	226-1877
Agency Name	CITY OF FRESNO
Counties	10; 15; 16; 20; 22; 24; 34; 39; 40; 54;
Districts	03; 05; 06; 10;
DBE NAICS	236210; 236220; 237310;
ACDBE NAICS	
Work Codes	C5100 CONCRETE STRUCTURE; C5501 STEEL STRUCTURES; C7301 CONCRETE CURB & SIDEWALK - MISC; C7500 MISC IRON & STEEL FRAME, COVER & GRATE; C8000 FENCING CONTRACTOR; C9801 BUILDING CONSTRUCTION; C9903 CONSTRUCTION CLEAN UP;
Licenses	A General Engineering Contractor;
Trucks	
Gender	M
Ethnicity	HISPANIC
Firm Type	DBE

Firm ID	14717
Firm/DBA Name	FRANK MEDINA GENERAL ENGINEERING CONTRACTOR
Address Line1	10096 AHART ROAD
Address Line2	
City	OROVILLE
State	CA
Zip Code1	95966
Zip Code2	
Mailing Address Line1	
Mailing Address Line2	
Mailing City	
Mailing State	
Mailing Zip Code1	
Mailing Zip Code2	
Certification Type	DBE
EMail	toni.medina@att.net
Contact Name	FRANK MEDINA
Area Code	(530)
Phone Number	743-0744
Fax Area Code	(530)
Fax Phone Number	743-9352
Agency Name	DEPARTMENT OF TRANSPORTATION
Counties	01; 02; 03; 04; 05; 06; 07; 09; 10; 11; 12; 15; 16; 17; 18; 20; 21; 23; 24; 25; 26; 27; 28; 29; 31; 32; 34; 35; 38; 39; 40; 41; 42; 43; 44; 45; 46; 47; 48; 49; 50; 51; 52; 53; 54; 55; 57; 58;
Districts	01; 02; 03; 04; 05; 06; 09; 10;
DBE NAICS	237310; 237990; 238110; 238120; 238910; 238990;
ACDBE NAICS	
Work Codes	C1200 CONSTRUCTION AREA SIGNS; C1522 RESET, ADJUST ROADWAY ITEMS; C1575 REMOVE BRIDGE ITEM; C1580 MODIFY BRIDGE ITEM; C1601 CLEARING & GRUBBING; C1901 ROADWAY EXCAVATION; C1910 GRADING; C1920 STRUCTURE EXCAVATION; C1930 STRUCTURE BACKFILL; C1940 DITCHES EXCAVATION; C5501 STEEL STRUCTURES; C5570 STEEL CRIB WALL; C5601 SIGN STRUCTURE; C5620 ROADSIDE SIGN; C7500 MISC IRON & STEEL FRAME, COVER & GRATE; C8000 FENCING CONTRACTOR; C8201 OBJECT MARKER; C8320 METAL BEAM GUARD RAILING; C8331 CONCRETE BARRIER; C8391 METAL BEAM BARRIER; C9810 SMALL STRUCTURES; C9980 DEMOLITION;
Licenses	A General Engineering Contractor; C13 Fencing Contractor;
Trucks	
Gender	M
Ethnicity	HISPANIC

Firm Type	DBE

Firm ID	4823
Firm/DBA Name	FRANK ZABEL TRUCKING CO.
Address Line1	4726 CUMMINGS ROAD
Address Line2	
City	EUREKA
State	CA
Zip Code1	95503
Zip Code2	
Mailing Address Line1	P.O. BOX 6236
Mailing Address Line2	
Mailing City	EUREKA
Mailing State	CA
Mailing Zip Code1	95502
Mailing Zip Code2	6236
Certification Type	DBE
EMail	zabeltrucking@gmail.com
Contact Name	FRANKLIN S. ZABEL
Area Code	(707)
Phone Number	443-4277
Fax Area Code	(707)
Fax Phone Number	443-4267
Agency Name	DEPARTMENT OF TRANSPORTATION
Counties	00;
Districts	00;
DBE NAICS	238990; 484110;

ACDBE NAICS

Work Codes	C9602 BOTTOM DUMP TRUCKING; C9605 FLAT BED TRUCKING; C9771 TRUCK BROKER; C9774 TRUCKER;
Licenses	A General Engineering Contractor;
Trucks	FOR HIRE - 7;
Gender	M
Ethnicity	HISPANIC
Firm Type	DBE

Firm ID	39575
Firm/DBA Name	G. RAMIREZ CONCRETE, INC.
Address Line1	1911 E. GERARD AVENUE
Address Line2	
City	MERCED
State	CA
Zip Code1	95341
Zip Code2	
Mailing Address Line1	23 W. ALEXANDER AVE., PMB #54
Mailing Address Line2	
Mailing City	MERCED
Mailing State	CA
Mailing Zip Code1	95348
Mailing Zip Code2	
Certification Type	DBE
EMail	gramirezconc@sbcglobal.net
Contact Name	HELEN SCHRUF
Area Code	(209)
Phone Number	722-4594
Fax Area Code	(209)
Fax Phone Number	726-5305
	CITY OF FRESNO

Agency Name	
Counties	03; 04; 05; 06; 10; 15; 16; 20; 22; 24; 27; 31; 34; 35; 40; 42; 44; 50; 51; 54; 55; 58;
Districts	03; 05; 06; 10;
DBE NAICS	237990; 238990;

ACDBE NAICS

Work Codes	C4010 PORTLAND CEMENT & CONCRETE PAVEMENT; C5110 CONCRETE SURFACE FINISH; C7301 CONCRETE CURB & SIDEWALK - MISC;
Licenses	A General Engineering Contractor; C08 Concrete Contractor;
Trucks	
Gender	M
Ethnicity	NATIVE AMERICAN
Firm Type	DBE

Firm ID	37545
Firm/DBA Name	GEMS ENVIRONMENTAL MANAGEMENT SERVICES, INC
Address Line1	1120 WILLOW PASS COURT
Address Line2	
City	CONCORD
State	CA
Zip Code1	94520
Zip Code2	
Mailing Address Line1	1120 WILLOW PASS COURT
Mailing Address Line2	
Mailing City	CONCORD
Mailing State	CA
Mailing Zip Code1	94520
Mailing Zip Code2	
ertification Type	DBE
Mail	rcamacho@gemsenvironmental.com
Contact Name	RICHARDS E. CAMACHO
Area Code	(925)
Phone Number	671-6822
Fax Area Code	(925)
Fax Phone Number	671-7120
Agency Name	DEPARTMENT OF TRANSPORTATION
Counties	00;
Districts	00;
DBE NAICS	237110; 237990;

ACDBE NAICS

Work Codes	C8700 CONSULTANT, NON ENGINEERING; C9903 CONSTRUCTION CLEAN UP; E4954 HAZARDOUS WASTE COLLECTION AND DISPOSAL;
Licenses	A General Engineering Contractor; ASB Asbestos; C33 Painting and Decorating Contractor; HAZ Hazardous Waste;
Trucks	
Gender	M
Ethnicity	ASIAN PACIFIC
Firm Type	DBE

Firm ID	34507
Firm/DBA Name	GERONIMO CONCRETE, INC.
ddress Line1	4560 N. HUNTINGTON DRIVE
Address Line2	
City	LOS ANGELES
State	CA
Zip Code1	90032
Zip Code2	

Mailing Address Line1	P.O. BOX 42027
Mailing Address Line2	
Mailing City	LOS ANGELES
Mailing State	CA
Mailing Zip Code1	90042
Mailing Zip Code2	
Certification Type	DBE
EMail	geronimo_concerte@sbcglobal.net
Contact Name	LIDIA LOPEZ
Area Code	(323)
Phone Number	225-2016
Fax Area Code	(323)
Fax Phone Number	222-8312
Agency Name	CITY OF LOS ANGELES
Counties	00;
Districts	00;
DBE NAICS	237310; 238110; 238120; 238990;

ACDBE NAICS

Work Codes	C1575 REMOVE BRIDGE ITEM; C1580 MOOIFY BRIOGE ITEM; C1910 GRADING; C4010 PORTLAND CEMENT & CONCRETE PAVEMENT; C4040 CLEAN & SEAL PAVEMENT JOINTS - ROUT & SEAL CRACKS; C5000 PRESTRESSING CONCRETE CAST-IN-PLACE;
Licenses	A General Engineering Contractor; B General Building Contractor; C08 Concrete Contractor; C12 Earthwork and Paving Contractor; C23 Ornamental Metal Contractor;
Trucks	
Gender	F
Ethnicity	HISPANIC
Firm Type	OBE

Firm ID	41873
Firm/DBA Name	GL ENGINEERING
Address Line1	9714 CRESCENT VALLEY CT
Address Line2	
City	ELK GROVE
State	CA
Zip Code1	95757
Zip Code2	
Mailing Address Line1	
Mailing Address Line2	
Mailing City	
Mailing State	
Mailing Zip Code1	
Mailing Zip Code2	
Certification Type	DBE
EMail	gl_engineering@comcast.net
Contact Name	GREGORY ALLEN LUTES
Area Code	(916)
Phone Number	289-0912
Fax Area Code	( )
Fax Phone Number	
Agency Name	DEPARTMENT OF TRANSPORTATION
Counties	04; 10; 28; 31; 34; 38; 39; 41; 43; 49; 50; 51; 52; 55; 58;
Districts	02; 03; 04; 06; 10;
DBE NAICS	236220; 237110; 237310; 237990;

ACDBE NAICS

Work Codes	C5501 STEEL STRUCTURES;
Licenses	A General Engineering Contractor;

Trucks	
Gender	M
Ethnicity	HISPANIC
Firm Type	DBE

Firm ID	31176
Firm/DBA Name	GLOBAL ROAD SEALING, INC
Address Line1	10832 DOROTHY AVE
Address Line2	
City	GARDEN GROVE
State	CA
Zip Code1	92843
Zip Code2	
Mailing Address Line1	
Mailing Address Line2	
Mailing City	
Mailing State	
Mailing Zip Code1	
Mailing Zip Code2	
Certification Type	DBE
EMail	trila.grsi@yahoo.com
Contact Name	TRI LA
Area Code	(714)
Phone Number	893-0845
Fax Area Code	(714)
Fax Phone Number	893-0945
Agency Name	DEPARTMENT OF TRANSPORTATION
Counties	00;
Districts	00;
DBE NAICS	238210; 238910;
ACDBE NAICS	
Work Codes	C1201 TRAFFIC CONTROL SYSTEM; C1601 CLEARING & GRUBBING; C1901 ROADWAY EXCAVATION; C1920 STRUCTURE EXCAVATION; C1930 STRUCTURE BACKFILL; C1940 DITCHES EXCAVATION; C3701 SEAL COAT; C4040 CLEAN & SEAL PAVEMENT JOINTS - ROUT & SEAL CRACKS; C4101 PAVEMENT SUBSEALING & JACKING; C8501 PAVEMENT MARKING; C8608 DETECTOR; C8611 RAMP METERING SYSTEM; C9858 RESIDENTIAL ELECTRICAL; C9980 DEMOLITION;
Licenses	A General Engineering Contractor; C10 Electrical Contractor; C32 Parking and Highway Improvement Contractor;
Trucks	
Gender	M
Ethnicity	ASIAN PACIFIC
Firm Type	DBE

Firm ID	9140
Firm/DBA Name	GOLDEN BAY FENCE PLUS IRON WORKS, INC.
Address Line1	4104 SOUTH B STREET
Address Line2	
City	STOCKTON
State	CA
Zip Code1	95206
Zip Code2	
Mailing Address Line1	
Mailing Address Line2	
Mailing City	
Mailing State	
Mailing Zip Code1	
Mailing Zip Code2	
Certification Type	DBE
EMail	GOLDENBAYFENCE@YAHOO.COM

Contact Name	CAROLINE TAIVIT
Area Code	(209)
Phone Number	944-9754
Fax Area Code	(209)
Fax Phone Number	944-5812
Agency Name	DEPARTMENT OF TRANSPORTATION
Counties	01; 02; 03; 04; 05; 06; 07; 09; 10; 20; 21; 24; 27; 28; 29; 31; 34; 38; 39; 40; 41; 43; 44; 48; 49; 50; 55; 57; 58;
Districts	03; 04; 05; 06; 10;
DBE NAICS	238990; 332323; 444190;

ACDBE NAICS

Work Codes	C0680 FENCING SUPPLIER; C8000 FENCING CONTRACTOR; D3490 FABRICATED METAL PRODUCTS;
Licenses	A General Engineering Contractor; B General Building Contractor; C10 Electrical Contractor; C13 Fencing Contractor; C23 Ornamental Metal Contractor;
Trucks	
Gender	M
Ethnicity	HISPANIC
Firm Type	DBE

Firm ID	30795
Firm/DBA Name	GONZALES, SUAREZ & ASSOCIATES, INC.
Address Line1	615 N. EUCLID AVE., #111
Address Line2	
City	ONTARIO
State	CA
Zip Code1	91786
Zip Code2	
Mailing Address Line1	
Mailing Address Line2	
Mailing City	
Mailing State	
Mailing Zip Code1	
Mailing Zip Code2	
Certification Type	DBE
EMail	dgonzales@gsaeng.com
Contact Name	DIONICIO "DEE" GONZALES
Area Code	(909)
Phone Number	988-3090
Fax Area Code	(909)
Fax Phone Number	988-8707
Agency Name	LOS ANGELES COUNTY METRO TRANSPORTATION AUTHORITY (MTA)
Counties	00;
Districts	00;
DBE NAICS	236210; 236220; 237990; 238190; 541330; 541618;

ACDBE NAICS

Work Codes	C5100 CONCRETE STRUCTURE; C8715 CONSULTANT, ENGINEERING; C8720 CIVIL ENGINEERING; C8770 CONSTRUCTION MANAGEMENT; C9802 BUILDING CONSTRUCTION;
Licenses	A General Engineering Contractor; EC Civil Engineer;
Trucks	
Gender	M
Ethnicity	HISPANIC
Firm Type	DBE

Firm ID	41115
Firm/DBA Name	H & H INDUSTRIES

Address Line1	17475 JACKSON DRIVE
Address Line2	
City	FONTANA
State	CA
Zip Code1	92336
Zip Code2	
Mailing Address Line1	
Mailing Address Line2	
Mailing City	
Mailing State	
Mailing Zip Code1	
Mailing Zip Code2	
Certification Type	DBE
EMail	info@hhindustries.us
Contact Name	HAROLD SUMPTER
Area Code	(909)
Phone Number	350-8211
Fax Area Code	(909)
Fax Phone Number	350-1201
Agency Name	LOS ANGELES COUNTY METRO TRANSPORTATION AUTHORITY (MTA)
Counties	01; 07; 10; 13; 15; 16; 19; 20; 21; 24; 30; 33; 34; 35; 36; 37; 38; 41; 42; 48; 50; 54; 56;
Districts	03; 04; 05; 06; 07; 08; 10; 11; 12;
DBE NAICS	236220; 237310;

ACDBE NAICS

Work Codes	C9802 BUILDING CONSTRUCTION;
Licenses	A General Engineering Contractor;
Trucks	
Gender	M
Ethnicity	BLACK
Firm Type	DBE

Firm ID	39391
Firm/DBA Name	HERCA TELECOMM SERVICES, INC.
Address Line1	18610 BECK STREET
Address Line2	
City	PERRIS
State	CA
Zip Code1	92570
Zip Code2	
Mailing Address Line1	
Mailing Address Line2	
Mailing City	
Mailing State	
Mailing Zip Code1	
Mailing Zip Code2	
Certification Type	DBE
EMail	hector.castellon@hercatelecomm.com
Contact Name	HECTOR CASTELLON
Area Code	(951)
Phone Number	940-5941
Fax Area Code	(951)
Fax Phone Number	940-5456
Agency Name	CITY OF LOS ANGELES
Counties	00;
Districts	00;
DBE NAICS	237130; 238210;

ACDBE NAICS

Work Codes	C0686 ELECTRICAL & SIGNALS SUPPLIER; C8777 Construction Management - Power and Communication Line and Related Structure Construction; D3660 COMMUNICATIONS EQUIPMENT;
Licenses	A General Engineering Contractor; B General Building Contractor; C10 Electrical Contractor;
Trucks	
Gender	M
Ethnicity	HISPANIC
Firm Type	DBE

Firm ID	35158
Firm/DBA Name	HERCON COMPANY, INC.
Address Line1	30211 AVENIDA DE LAS BANDERAS, STE 200
Address Line2	
City	RANCHO SANTA MARGARI
State	CA
Zip Code1	92688
Zip Code2	
Mailing Address Line1	
Mailing Address Line2	
Mailing City	
Mailing State	
Mailing Zip Code1	
Mailing Zip Code2	
Certification Type	DBE
EMail	ahernandez@herconcompany.com
Contact Name	ALBERT HERNANDEZ JR.
Area Code	(949)
Phone Number	766-6770
Fax Area Code	(949)
Fax Phone Number	766-6768
Agency Name	DEPARTMENT OF TRANSPORTATION
Counties	00;
Districts	00;
DBE NAICS	237110;

ACDBE NAICS

Work Codes	C1701 DEVELOP WATER SUPPLY; C1920 STRUCTURE EXCAVATION; C7160 ASBESTOS-CEMENT SEWER PIPE; C7191 SEWER MANHOLE; C8903 ELECTRICAL;
Licenses	A General Engineering Contractor; ASB Asbestos; B General Building Contractor; C10 Electrical Contractor; C12 Earthwork and Paving Contractor; C16 Fire Protection Contractor; C36 Plumbing Contractor; C42 Sanitation System Contractor; HAZ Hazardous Waste;
Trucks	
Gender	M
Ethnicity	HISPANIC
Firm Type	DBE

Firm ID	12174
Firm/DBA Name	INTERWEST PACIFIC, LTD.
Address Line1	990 HIGHLAND DR. STE. 212
Address Line2	
City	SOLANA BEACH
State	CA
Zip Code1	92075
Zip Code2	
Mailing Address Line1	PO BOX 1450
Mailing Address Line2	
Mailing City	SOLANA BEACH
	CA

Mailing State	
Mailing Zip Code1	92075
Mailing Zip Code2	
Certification Type	DBE
Mail	office@interwestpacific.com
ontact Name	JACK NICKOLAISEN
Area Code	(858)
Phone Number	259-2062
Fax Area Code	(858)
Fax Phone Number	345-3737
Agency Name	DEPARTMENT OF TRANSPORTATION
Counties	00;
Districts	00;
DBE NAICS	237310; 238110; 238120; 238910; 238990;
ACDBE NAICS	
Work Codes	C1601 CLEARING & GRUBBING; C1901 ROADWAY EXCAVATION; C1920 STRUCTURE EXCAVATION; C1930 STRUCTURE BACKFILL; C1940 DITCHES EXCAVATION; C5501 STEEL STRUCTURES; C5570 STEEL CRIB WALL; C9980 DEMOLITION;
Licenses	A General Engineering Contractor; B General Building Contractor; C07 Low Voltage Systems Contractor;
Trucks	
Gender	M
Ethnicity	HISPANIC
Firm Type	DBE

Firm ID	39353
Firm/DBA Name	J N A BUILDERS, INC.
Address Line1	3549 EL CAMINITO
ddress Line2	
ity	LA CRESCENTA
State	CA
Zip Code1	91214
Zip Code2	
Mailing Address Line1	
Mailing Address Line2	
Mailing City	
Mailing State	
Mailing Zip Code1	
Mailing Zip Code2	
Certification Type	DBE
EMail	JNABUILDERSINC@gmail.com
Contact Name	JOSEPH N. ANTONIO
Area Code	(818)
Phone Number	281-5262
Fax Area Code	(818)
Fax Phone Number	248-0013
Agency Name	LOS ANGELES COUNTY METRO TRANSPORTATION AUTHORITY (MTA)
Counties	01; 07; 10; 15; 16; 19; 20; 21; 24; 27; 28; 30; 33; 34; 35; 36; 37; 38; 39; 40; 41; 42; 43; 44; 48; 49; 50; 54; 56;
Districts	03; 04; 05; 06; 07; 08; 10; 11; 12;
DBE NAICS	236116; 236220; 237210; 237310; 237990; 238110; 238910; 541611;
ACDBE NAICS	
Work Codes	C5100 CONCRETE STRUCTURE; C8700 CONSULTANT, NON ENGINEERING; C9802 BUILDING CONSTRUCTION; D3530 CONSTRUCTION & RELATED MACHINERY;
Licenses	A General Engineering Contractor; B General Building Contractor; C08 Concrete Contractor;
Trucks	

Gender	M
Ethnicity	ASIAN PACIFIC
Firm Type	DBE

Firm ID	41668
Firm/DBA Name	J. C. PALOMAR CONSTRUCTION, INC.
Address Line1	2627 S. MAIN STREET
Address Line2	
City	SANTA ANA
State	CA
Zip Code1	92707
Zip Code2	
Mailing Address Line1	
Mailing Address Line2	
Mailing City	
Mailing State	
Mailing Zip Code1	
Mailing Zip Code2	
Certification Type	DBE
EMail	chris@JCPalomar.com
Contact Name	JOSE DIAZ
Area Code	(714)
Phone Number	754-6440
Fax Area Code	(714)
Fax Phone Number	754-6493
Agency Name	LOS ANGELES COUNTY METRO TRANSPORTATION AUTHORITY (MTA)
Counties	00;
Districts	00;
DBE NAICS	237120; 238910; 541620; 562910;
ACDBE NAICS	
Work Codes	A0710 SOIL PREPARATION SERVICES; B1380 OIL & GAS FIELD SERVICES; C8713 CONSULTANT, ENVIRONMENTAL;
Licenses	A General Engineering Contractor; C10 Electrical Contractor; HAZ Hazardous Waste;
Trucks	
Gender	M
Ethnicity	HISPANIC
Firm Type	DBE

Firm ID	37403
Firm/DBA Name	J. MORAGA CONSTRUCTION, INC
Address Line1	2857 BUSINESS PARK WAY
Address Line2	
City	MERCED
State	CA
Zip Code1	95348
Zip Code2	
Mailing Address Line1	
Mailing Address Line2	
Mailing City	
Mailing State	
Mailing Zip Code1	
Mailing Zip Code2	
Certification Type	DBE
EMail	jmoraga@flash.net
Contact Name	JOSE MORAGA
Area Code	(209)
Phone Number	388-9200

Fax Area Code	(209)
Fax Phone Number	383-6506
Agency Name	CITY OF FRESNO
Counties	01; 10; 15; 20; 24; 34; 35; 38; 39; 41; 43; 44; 48; 49; 50; 54; 55;
Districts	03; 04; 05; 06; 10;
DBE NAICS	237110; 237310; 238910;

ACDBE NAICS

Work Codes	C5100 CONCRETE STRUCTURE; C8700 CONSULTANT, NON ENGINEERING; C8770 CONSTRUCTION MANAGEMENT;
Licenses	A General Engineering Contractor;
Trucks	
Gender	M
Ethnicity	HISPANIC
Firm Type	DBE

Firm ID	34339
Firm/DBA Name	J.G. CONSTRUCTION
Address Line1	15632 EL PRADO RD.
Address Line2	
City	CHINO
State	CA
Zip Code1	91710
Zip Code2	
Mailing Address Line1	
Mailing Address Line2	
Mailing City	
Mailing State	
Mailing Zip Code1	
Mailing Zip Code2	
Certification Type	DBE
EMail	juneg@jgconstruction.com
Contact Name	JUNE A. GROTHE
Area Code	(909)
Phone Number	993-9393
Fax Area Code	(909)
Fax Phone Number	993-9394
Agency Name	CITY OF LOS ANGELES
Counties	00;
Districts	00;
DBE NAICS	236220;

ACDBE NAICS

Work Codes	C9801 BUILDING CONSTRUCTION;
Licenses	A General Engineering Contractor;
Trucks	
Gender	F
Ethnicity	CAUCASIAN
Firm Type	DBE

Firm ID	32278
Firm/DBA Name	JESMAR CONSTRUCTION
Address Line1	2528 OAKMOUNT AVENUE
Address Line2	
City	SANTA ANA
State	CA
Zip Code1	92706

Zip Code2	
Mailing Address Line1	
Mailing Address Line2	
Mailing City	
Mailing State	
Mailing Zip Code1	
Mailing Zip Code2	
Certification Type	DBE
EMail	jesmarboring@sbcglobal.net
Contact Name	JESUS HERNANDEZ
Area Code	(714)
Phone Number	972-2665
Fax Area Code	(714)
Fax Phone Number	972-9331
Agency Name	DEPARTMENT OF TRANSPORTATION
Counties	00;
Districts	00;
DBE NAICS	221310; 237310; 238120; 238910;

ACDBE NAICS

Work Codes	C1601 CLEARING & GRUBBING; C1701 DEVELOP WATER SUPPLY; C1901 ROADWAY EXCAVATION; C1920 STRUCTURE EXCAVATION; C1930 STRUCTURE BACKFILL; C1940 DITCHES EXCAVATION; C5501 STEEL STRUCTURES; C5570 STEEL CRIB WALL; C9980 DEMOLITION; E4940 WATER SUPPLY; E4950 SANITARY SERVICES; E4952 SEWERAGE SYSTEMS; E4970 IRRIGATION SYSTEMS;
Licenses	A General Engineering Contractor;
Trucks	
Gender	M
Ethnicity	HISPANIC
Firm Type	DBE

Firm ID	39112
Firm/DBA Name	JND THOMAS COMPANY, INC.
Address Line1	22052 W. EVERETT
Address Line2	
City	RIVERDALE
State	CA
Zip Code1	93656
Zip Code2	
Mailing Address Line1	
Mailing Address Line2	
Mailing City	
Mailing State	
Mailing Zip Code1	
Mailing Zip Code2	
Certification Type	DBE
EMail	dennis@jndthomas.com
Contact Name	DENNIS THOMAS
Area Code	(559)
Phone Number	867-3813
Fax Area Code	(559)
Fax Phone Number	867-0302
Agency Name	CITY OF FRESNO
Counties	00;
Districts	00;
DBE NAICS	237110; 237990;

ACDBE NAICS

Work Codes	A0710 SOIL PREPARATION SERVICES;
Licenses	A General Engineering Contractor;
Trucks	
Gender	M
Ethnicity	HISPANIC
Firm Type	DBE

Firm ID	447
Firm/DBA Name	K R C SAFETY CO. INC.
Address Line1	7821 WEST SUNNYVIEW
Address Line2	
City	VISALIA
State	CA
Zip Code1	93291
Zip Code2	
Mailing Address Line1	
Mailing Address Line2	
Mailing City	
Mailing State	
Mailing Zip Code1	
Mailing Zip Code2	
Certification Type	DBE
EMail	garyc@krcsafety.com
Contact Name	GARY CASTRO
Area Code	(559)
Phone Number	732-0393
Fax Area Code	(559)
Fax Phone Number	732-2684
Agency Name	CITY OF FRESNO
Counties	00;
Districts	00;
DBE NAICS	237310; 238110; 238990; 339950; 423390; 423810; 423830; 423990; 484110; 532412; 541430; 541490; 541850; 541890;
ACDBE NAICS	
Work Codes	C0612 SAFETY SUPPLIER; C0683 GUARD RAILINGS & BARRIERS SUPPLIER; C1200 CONSTRUCTION AREA SIGNS; C1201 TRAFFIC CONTROL SYSTEM; C1522 RESET, ADJUST ROADWAY ITEMS; C2030 EROSION CONTROL; C2066 TEMPORARY EROSION CONTROL; C3930 PAVEMENT REINFORCING FABRIC; C4906 CAST-IN-DRILLED-HOLE CONCRETE PILING; C5601 SIGN STRUCTURE; C5620 ROADSIDE SIGN; C8101 SURVEY OR HISTORICAL MONUMENT; C8201 OBJECT MARKER; C8320 METAL BEAM GUARD RAILING; C8405 THERMOPLASTIC TRAFFIC STRIPING & MARKING; C8406 PAINTED TRAFFIC STRIPING & MARKING; C8501 PAVEMENT MARKING; C9605 FLAT BED TRUCKING; C9774 TRUCKER; C9907 CONSTRUCTION EQUIPMENT RENTAL; F5030 LUMBER AND CONSTRUCTION MATERIAL;
Licenses	A General Engineering Contractor; C31 Construction Zone Traffic Control Contractor;
Trucks	
Gender	M
Ethnicity	NATIVE AMERICAN
Firm Type	DBE

Firm ID	38347
Firm/DBA Name	KAYLEN ENGINEERING, INC. DBA KAYLEN TRAFFIC CONTROL
Address Line1	22140 FRONTIER ROAD
Address Line2	
City	CLOVIS
State	CA
Zip Code1	93619
Zip Code2	
Mailing Address Line1	

Mailing Address Line2	
Mailing City	
Mailing State	
Mailing Zip Code1	
Mailing Zip Code2	
Certification Type	DBE
EMail	karen@imaginationmetals.com
Contact Name	KAREN JOHNSTON
Area Code	(559)
Phone Number	299-2899
Fax Area Code	( )
Fax Phone Number	
Agency Name	CITY OF FRESNO
Counties	10; 15; 16; 20; 24; 33; 34; 36; 37; 39; 49; 50; 54;
Districts	03; 04; 06; 08; 10; 11;
DBE NAICS	237110; 238990; 332322; 332323; 423390; 425120;

ACDBE NAICS

Work Codes	C1200 CONSTRUCTION AREA SIGNS; C1201 TRAFFIC CONTROL SYSTEM; C5105 MINOR CONCRETE STRUCTURE; C6200 ALTERNATIVE PIPE CULVERT; C6301 CAST-IN-PLACE CONCRETE PIPE; C6500 REINFORCED CONCRETE PIPE; C6650 CORRUGATED METAL PIPE (CSP); D3470 METAL MANUFACTURING; D3490 FABRICATED METAL PRODUCTS;
Licenses	A General Engineering Contractor; C31 Construction Zone Traffic Control Contractor;
Trucks	
Gender	F
Ethnicity	CAUCASIAN
Firm Type	DBE

Firm ID	39610
Firm/DBA Name	KITCHELL CONSTRUCTION, INC.
Address Line1	311 SOUTH FIRST STREET
Address Line2	
City	TURLOCK
State	CA
Zip Code1	95380
Zip Code2	
Mailing Address Line1	P.O. BOX 3118
Mailing Address Line2	
Mailing City	TURLOCK
Mailing State	CA
Mailing Zip Code1	95381
Mailing Zip Code2	
Certification Type	DBE
EMail	kitchellconstruction@gmail.com
Contact Name	MICHAEL KITCHELL
Area Code	(209)
Phone Number	667-1454
Fax Area Code	(209)
Fax Phone Number	667-1201
Agency Name	DEPARTMENT OF TRANSPORTATION
Counties	01; 03; 04; 05; 06; 07; 09; 10; 11; 12; 15; 16; 17; 18; 20; 21; 22; 24; 27; 28; 29; 31; 32; 34; 38; 39; 40; 41; 43; 44; 45; 46; 47; 48; 49; 50; 51; 52; 53; 54; 55; 57; 58;
Districts	01; 02; 03; 04; 05; 06; 10;
DBE NAICS	238910;

ACDBE NAICS

Work Codes	C1601 CLEARING & GRUBBING; C1901 ROADWAY EXCAVATION;
Licenses	A General Engineering Contractor; HAZ Hazardous Waste;

Trucks	
Gender	M
Ethnicity	NATIVE AMERICAN
Firm Type	DBE

Firm ID	35078
Firm/DBA Name	KOAM CONSTRUCTION, INC.
Address Line1	4322 WILSHIRE BLVD. #103
Address Line2	
City	LOS ANGELES
State	CA
Zip Code1	90010
Zip Code2	
Mailing Address Line1	
Mailing Address Line2	
Mailing City	
Mailing State	
Mailing Zip Code1	
Mailing Zip Code2	
Certification Type	DBE
EMail	frank@koamcon.com
Contact Name	FRANK KIM
Area Code	(323)
Phone Number	937-4588
Fax Area Code	(323)
Fax Phone Number	937-4589
Agency Name	LOS ANGELES COUNTY METRO TRANSPORTATION AUTHORITY (MTA)
Counties	00;
Districts	00;
DBE NAICS	236220;

ACDBE NAICS

Work Codes	C9802 BUILDING CONSTRUCTION;
Licenses	A General Engineering Contractor; B General Building Contractor; C21 Building Moving / Demolition Contractor;
Trucks	
Gender	M
Ethnicity	ASIAN PACIFIC
Firm Type	DBE

Firm ID	40890
Firm/DBA Name	KRS CONSTRUCTION INC
Address Line1	9302 ELDER CREEK RD.
Address Line2	
City	SACRAMENTO
State	CA
Zip Code1	95829
Zip Code2	
Mailing Address Line1	
Mailing Address Line2	
Mailing City	
Mailing State	
Mailing Zip Code1	
Mailing Zip Code2	
Certification Type	DBE
EMail	krsconstruction@sbcglobal.net
Contact Name	KAREN A. HAMILTON
Area Code	(916)
	381-6438

Phone Number	
Fax Area Code	(916)
Fax Phone Number	381-6438
Agency Name	DEPARTMENT OF TRANSPORTATION
Counties	00;
Districts	00;
DBE NAICS	237110; 237120; 237130; 237990;

ACDBE NAICS

Work Codes	C1940 DITCHES EXCAVATION;
Licenses	A General Engineering Contractor;
Trucks	
Gender	F
Ethnicity	CAUCASIAN
Firm Type	DBE

Firm ID	41590
Firm/DBA Name	L & L BRIDGES
Address Line1	6748 RUTGERS DRIVE
Address Line2	
City	SEBASTOPOL
State	CA
Zip Code1	95472
Zip Code2	
Mailing Address Line1	P.O. BOX 1942
Mailing Address Line2	
Mailing City	SEBASTOPOL
Mailing State	CA
Mailing Zip Code1	95473
Mailing Zip Code2	
Certification Type	DBE
EMail	levigurule@comcast.net
Contact Name	LEVI GURULE
Area Code	(707)
Phone Number	478-6205
Fax Area Code	(509)
Fax Phone Number	559-7300
Agency Name	DEPARTMENT OF TRANSPORTATION
Counties	01; 02; 03; 04; 05; 06; 07; 08; 09; 10; 11; 12; 13; 14; 15; 16; 17; 18; 19; 20; 21; 22; 23; 24; 25; 26; 27; 28; 29; 30; 31; 32; 33; 34; 35; 36; 37; 38; 39; 40; 41; 42; 43; 44; 45; 46; 47; 48; 49; 50; 51; 52; 53; 54; 55; 56; 57; 58;
Districts	01; 02; 03; 04; 05; 06; 07; 08; 09; 10; 11; 12;
DBE NAICS	237310; 541330; 541350;

ACDBE NAICS

Work Codes	C8703 TRAFFIC ENGINEER; C8710 ENGINEERING; C8731 Building Inspection Services; C8773 Construction Management - Highway, Street and Bridge Construction; C8776 Construction Management - Other Heavy and Civil Construction;
Licenses	A General Engineering Contractor; B General Building Contractor; EC Civil Engineer; ET Traffic Engineer;
Trucks	
Gender	M
Ethnicity	HISPANIC
Firm Type	DBE

Firm ID	15784
Firm/DBA Name	L H ENGINEERING CO.
Address Line1	708 N. VALLEY ST., SUITE S

Address Line2	
City	ANAHEIM
State	CA
Zip Code1	92801
Zip Code2	
Mailing Address Line1	
Mailing Address Line2	
Mailing City	
Mailing State	
Mailing Zip Code1	
Mailing Zip Code2	
Certification Type	DBE
EMail	lpa133@msn.com
Contact Name	PAUL H. LEE
Area Code	(714)
Phone Number	758-8035
Fax Area Code	(714)
Fax Phone Number	758-8037
Agency Name	DEPARTMENT OF TRANSPORTATION
Counties	00;
Districts	00;
DBE NAICS	236220; 237990;

ACDBE NAICS

Work Codes	C1940 DITCHES EXCAVATION; C9801 BUILDING CONSTRUCTION; C9810 SMALL STRUCTURES; C9822 CARPENTRY;
Licenses	A General Engineering Contractor; B General Building Contractor;
Trucks	
Gender	M
Ethnicity	ASIAN PACIFIC
Firm Type	DBE

Firm ID	32366
Firm/DBA Name	L.D. STROBEL CO., INC.
Address Line1	1022 SHARY CIRCLE, UNIT 9
Address Line2	
City	CONCORD
State	CA
Zip Code1	94518
Zip Code2	
Mailing Address Line1	
Mailing Address Line2	
Mailing City	
Mailing State	
Mailing Zip Code1	
Mailing Zip Code2	
Certification Type	DBE
EMail	strobel@ldstrobel.com
Contact Name	LARRY STOBEL
Area Code	(925)
Phone Number	686-3241
Fax Area Code	(925)
Fax Phone Number	686-3350
Agency Name	SANTA CLARA VALLEY TRANSPORTATION AUTHORITY (VTA)
Counties	00;
Districts	00;
DBE NAICS	237130; 238210;

ACDBE NAICS

Work Codes	E4890 COMMUNICATIONS SERVICES; E4910 ELECTRIC SERVICES;
Licenses	A General Engineering Contractor; C10 Electrical Contractor; EC Civil Engineer;
Trucks	
Gender	M
Ethnicity	ASIAN PACIFIC
Firm Type	DBE

Firm ID	41241
Firm/DBA Name	LASAR UNDERGROUND CONSTRUCTION
Address Line1	2565 N. SUNNYSIDE
Address Line2	
City	FRESNO
State	CA
Zip Code1	93727
Zip Code2	
Mailing Address Line1	
Mailing Address Line2	
Mailing City	
Mailing State	
Mailing Zip Code1	
Mailing Zip Code2	
Certification Type	DBE
EMail	lorrig@sbcglobal.net
Contact Name	LORRIE GRISWOLD
Area Code	(559)
Phone Number	291-1024
Fax Area Code	(559)
Fax Phone Number	291-0624
Agency Name	CITY OF FRESNO
Counties	10; 15; 16; 20; 24; 54;
Districts	06; 10;
DBE NAICS	237110; 237120; 237130; 237210;

ACDBE NAICS

Work Codes	C7000 PLASTIC PIPE; E4810 TELEPHONE COMMUNICATIONS; E4890 COMMUNICATIONS SERVICES; E4930 COMBINATION UTILITY SERVICES;
Licenses	A General Engineering Contractor;
Trucks	
Gender	F
Ethnicity	CAUCASIAN
Firm Type	DBE

Firm ID	31286
Firm/DBA Name	LNA CONCRETE STRUCTURES, INC.
Address Line1	15455 TERN STREET
Address Line2	
City	CHINO HILLS
State	CA
Zip Code1	91709
Zip Code2	
Mailing Address Line1	
Mailing Address Line2	
Mailing City	
Mailing State	
Mailing Zip Code1	
Mailing Zip Code2	
Certification Type	DBE

EMail	
Contact Name	null MR. HELIODORO GARCIA
Area Code	(909)
Phone Number	393-1493
Fax Area Code	(909)
Fax Phone Number	393-9363
Agency Name	CITY OF LOS ANGELES
Counties	00;
Districts	00;
DBE NAICS	237310; 238110; 238120; 238990;

ACDBE NAICS

Work Codes	C1575 REMOVE BRIDGE ITEM; C1580 MODIFY BRIDGE ITEM; C1910 GRADING; C2201 FINISHING ROADWAY; C3901 ASPHALT CONCRETE; C3910 PAVING ASPHALT (ASPHALT CONCRETE);
Licenses	A General Engineering Contractor;
Trucks	
Gender	M
Ethnicity	HISPANIC
Firm Type	DBE

Firm ID	25591
Firm/DBA Name	LONE STAR LANDSCAPE, INC
Address Line1	1910 E. SAN MARTIN AVENUE
Address Line2	
City	SAN MARTIN
State	CA
Zip Code1	95046
Zip Code2	
Mailing Address Line1	P.O. BOX 70
Mailing Address Line2	
Mailing City	SAN MARTIN
Mailing State	CA
Mailing Zip Code1	95046
Mailing Zip Code2	
Certification Type	DBE
EMail	bob@lonestarland.net
Contact Name	ROBERT SAMANIEGO
Area Code	(408)
Phone Number	682-0100
Fax Area Code	(408)
Fax Phone Number	682-0109
Agency Name	DEPARTMENT OF TRANSPORTATION
Counties	01; 05; 06; 07; 09; 10; 20; 21; 22; 24; 27; 28; 29; 32; 34; 35; 38; 39; 40; 41; 43; 44; 48; 49; 50; 51; 55; 57; 58;
Districts	02; 03; 04; 05; 06; 10;
DBE NAICS	237310; 238990;

ACDBE NAICS

Work Codes	A0780 LANDSCAPE & HORTICULTURAL SERVICES;
Licenses	A General Engineering Contractor;
Trucks	
Gender	M
Ethnicity	HISPANIC
Firm Type	DBE

Firm ID	37039
Firm/DBA Name	LUCAS BUILDERS, INC.

Address Line1	4020 N. PALM STREET #206
Address Line2	
City	FULLERTON
State	CA
Zip Code1	92835
Zip Code2	
Mailing Address Line1	5277 TRIPLE CROWN DRIVE
Mailing Address Line2	
Mailing City	BONSALL
Mailing State	CA
Mailing Zip Code1	92003
Mailing Zip Code2	
Certification Type	DBE
EMail	sam@lucascompany.com
Contact Name	SAMAN SILVA
Area Code	(310)
Phone Number	853-0690
Fax Area Code	(310)
Fax Phone Number	756-7247
Agency Name	LOS ANGELES COUNTY METRO TRANSPORTATION AUTHORITY (MTA)
Counties	00;
Districts	00;
DBE NAICS	236115; 236116; 236220; 237110; 238110; 238910;

ACDBE NAICS

Work Codes	C8770 CONSTRUCTION MANAGEMENT; C9801 BUILDING CONSTRUCTION; C9869 ASBESTOS REMOVAL/ABATEMENT; E4952 SEWERAGE SYSTEMS;
Licenses	A General Engineering Contractor;
Trucks	
Gender	M
Ethnicity	ASIAN SUBCONTINENT
Firm Type	DBE

Firm ID	41307
Firm/DBA Name	M J AVILA COMPANY, INC.
Address Line1	7258 W. RIALTO
Address Line2	
City	FRESNO
State	CA
Zip Code1	93723
Zip Code2	
Mailing Address Line1	
Mailing Address Line2	
Mailing City	
Mailing State	
Mailing Zip Code1	
Mailing Zip Code2	
Certification Type	DBE
EMail	brucej@mjavila.com
Contact Name	MARY JO AVILA
Area Code	(559)
Phone Number	846-7601
Fax Area Code	(559)
Fax Phone Number	846-7610
Agency Name	CITY OF FRESNO
Counties	01; 03; 05; 10; 15; 16; 20; 21; 22; 24; 27; 28; 34; 35; 38; 39; 41; 43; 44; 48; 50; 54; 55;
Districts	03; 04; 05; 06; 10;
DBE NAICS	236210; 236220; 237110; 237120; 237130; 237210; 237310; 237990; 238910; 238990; 423320; 423390; 532412;

ACDBE NAICS

Work Codes	C0625 SAND & GRAVEL SUPPLIER; C0639 ASPHALT SUPPLIER; C0651 CONCRETE & CEMENT SUPPLIER; C0670 PIPE SUPPLIER; C0671 Draining Systems Supplier; C0672 Storm Water Systems Supplier; C0698 BUILDING MATERIAL SUPPLIER; C2501 AGGREGATE SUBBASE; C2602 AGGREGATE BASE; C3901 ASPHALT CONCRETE; C5105 MINOR CONCRETE STRUCTURE; C5501 STEEL STRUCTURES; C7000 PLASTIC PIPE; C7301 CONCRETE CURB & SIDEWALK - MISC; C9801 BUILDING CONSTRUCTION; C9810 SMALL STRUCTURES; C9907 CONSTRUCTION EQUIPMENT RENTAL; C9908 HEAVY EQUIPMENT RENTAL; D3610 ELECTRIC DISTRIBUTION EQUIPMENT; E4910 ELECTRIC SERVICES; E4930 COMBINATION UTILITY SERVICES; F5090 MISC DURABLE GOODS;
Licenses	A General Engineering Contractor; B General Building Contractor;
Trucks	
Gender	F
Ethnicity	HISPANIC
Firm Type	DBE

Firm ID	25306
Firm/DBA Name	M S NAVARRO ENGINEERING
Address Line1	10741 VIKING AVENUE
Address Line2	
City	NORTHRIDGE
State	CA
Zip Code1	91326
Zip Code2	
Mailing Address Line1	
Mailing Address Line2	
Mailing City	
Mailing State	
Mailing Zip Code1	
Mailing Zip Code2	
Certification Type	DBE
EMail	kedypn@msnavarroeng.com
Contact Name	ORQUEDIA NAVARRO
Area Code	(818)
Phone Number	368-7262
Fax Area Code	(818)
Fax Phone Number	368-7065
Agency Name	LOS ANGELES COUNTY METRO TRANSPORTATION AUTHORITY (MTA)
Counties	00;
Districts	00;
DBE NAICS	238210; 541330;

ACDBE NAICS

Work Codes	C8740 ELECTRICAL ENGINEERS; C8903 ELECTRICAL; E4910 ELECTRIC SERVICES;
Licenses	A General Engineering Contractor; C10 Electrical Contractor; EE Electrical Engineer ;
Trucks	
Gender	M
Ethnicity	ASIAN PACIFIC
Firm Type	DBE

Firm ID	38088
Firm/DBA Name	M. E. AVILA CONSTRUCTION CORPORATION
Address Line1	P.O. BOX 6013
Address Line2	
City	ATASCADERO
State	CA
Zip Code1	93423

Zip Code2	
Mailing Address Line1	P.O. BOX 6013
Mailing Address Line2	
Mailing City	ATASCADERO
Mailing State	CA
Mailing Zip Code1	93423
Mailing Zip Code2	
Certification Type	DBE
EMail	kellie@avilaconstruction.net
Contact Name	MICHAEL AVILA
Area Code	(805)
Phone Number	462-1801
Fax Area Code	(805)
Fax Phone Number	462-8630
Agency Name	CITY OF FRESNO
Counties	10; 15; 16; 27; 35; 40; 42; 43; 44; 54; 56;
Districts	04; 05; 06; 07;
DBE NAICS	236115; 236116; 236117; 236118; 236220; 237310; 238110; 238130; 238170; 238190; 238350; 238910;

ACDBE NAICS

Work Codes	C9802 BUILDING CONSTRUCTION;
Licenses	A General Engineering Contractor; B General Building Contractor;
Trucks	
Gender	M
Ethnicity	HISPANIC
Firm Type	DBE

Firm ID	35799
Firm/DBA Name	M. S. LEE ENTERPRISES
Address Line1	1908 COVENTRY
Address Line2	
City	CLOVIS
State	CA
Zip Code1	93611
Zip Code2	
Mailing Address Line1	
Mailing Address Line2	
Mailing City	
Mailing State	
Mailing Zip Code1	
Mailing Zip Code2	
Certification Type	DBE
EMail	MonSLee@yahoo.com
Contact Name	MON SON LEE
Area Code	(559)
Phone Number	217-4851
Fax Area Code	(559)
Fax Phone Number	325-0760
Agency Name	CITY OF FRESNO
Counties	10; 15; 16; 20; 24; 54;
Districts	06; 10;
DBE NAICS	221310; 236115; 236116; 236118; 237310; 237990; 238110; 238990;

ACDBE NAICS

Work Codes	C1200 CONSTRUCTION AREA SIGNS; C1701 DEVELOP WATER SUPPLY; C2065 IRRIGATION SYSTEM; C7301 CONCRETE CURB & SIDEWALK - MISC; C9801 BUILDING CONSTRUCTION; C9846 ADDITIONS, ALTERATIONS OR REPAIRS;
Licenses	A General Engineering Contractor; B General Building Contractor;

Trucks	
Gender	M
Ethnicity	ASIAN PACIFIC
Firm Type	DBE

Firm ID	39715
Firm/DBA Name	MASS X INC.
Address Line1	55 SHAW AVENUE #105
Address Line2	
City	CLOVIS
State	CA
Zip Code1	93612
Zip Code2	
Mailing Address Line1	PO BOX 2953
Mailing Address Line2	
Mailing City	CLOVIS
Mailing State	CA
Mailing Zip Code1	93613
Mailing Zip Code2	
Certification Type	DBE
EMail	massx6@hotmail.com
Contact Name	JENNIFER FOSTER
Area Code	(559)
Phone Number	472-3274
Fax Area Code	(559)
Fax Phone Number	472-3275
Agency Name	CITY OF FRESNO
Counties	10; 14; 15; 16; 20; 22; 24; 27; 34; 39; 40; 50; 54; 55; 56;
Districts	03; 05; 06; 07; 09; 10;
DBE NAICS	237210; 237310; 237990; 238910;

ACDBE NAICS

Work Codes	C1901 ROADWAY EXCAVATION; C1910 GRADING; C1920 STRUCTURE EXCAVATION; C1930 STRUCTURE BACKFILL; C1970 EMBANKMENT CONSTRUCTION; C2501 AGGREGATE SUBBASE; C2602 AGGREGATE BASE; C3901 ASPHALT CONCRETE;
Licenses	A General Engineering Contractor;
Trucks	
Gender	F
Ethnicity	CAUCASIAN
Firm Type	DBE

Firm ID	37417
Firm/DBA Name	MATTOS UNDERGROUND CONSTRUCTION, INC.
Address Line1	819 E. WOOD
Address Line2	
City	LATON
State	CA
Zip Code1	93242
Zip Code2	
Mailing Address Line1	
Mailing Address Line2	
Mailing City	
Mailing State	
Mailing Zip Code1	
Mailing Zip Code2	
Certification Type	DBE
EMail	nanmattos@yahoo.com
Contact Name	NANETTE MATTOS

Area Code	(559)
Phone Number	923-4615
Fax Area Code	(559)
Fax Phone Number	923-4651
Agency Name	CITY OF FRESNO
Counties	10; 15; 16; 20; 54;
Districts	06;
DBE NAICS	237110; 237120; 237130;

ACDBE NAICS

Work Codes	C1701 DEVELOP WATER SUPPLY; C7000 PLASTIC PIPE; C7112 REINFORCED CONCRETE SEWER PIPE; C7191 SEWER MANHOLE; E4610 PIPELINES, EXCEPT NATURAL GAS; E4930 COMBINATION UTILITY SERVICES; E4952 SEWERAGE SYSTEMS;
Licenses	A General Engineering Contractor;
Trucks	
Gender	F
Ethnicity	CAUCASIAN
Firm Type	OBE

Firm ID	41112
Firm/DBA Name	MAX OUT INC.
Address Line1	19135 SAN JOSE AVENUE
Address Line2	
City	CITY OF INOUSTRY
State	CA
Zip Code1	91748
Zip Code2	
Mailing Address Line1	
Mailing Address Line2	
Mailing City	
Mailing State	
Mailing Zip Code1	
Mailing Zip Code2	
Certification Type	DBE
EMail	REdison@maxoutinc.biz
Contact Name	RODERICK EDISON SR.
Area Code	(626)
Phone Number	964-8003
Fax Area Code	(626)
Fax Phone Number	964-8004
Agency Name	LOS ANGELES COUNTY METRO TRANSPORTATION AUTHORITY (MTA)
Counties	10; 19; 30; 33; 36; 37; 40; 42;
Districts	05; 06; 07; 08; 11; 12;
DBE NAICS	237310; 238110; 238140;

ACDBE NAICS

Work Codes	C5100 CONCRETE STRUCTURE; C9802 BUILDING CONSTRUCTION; C9842 MASONRY;
Licenses	A General Engineering Contractor;
Trucks	
Gender	M
Ethnicity	BLACK
Firm Type	OBE

Firm ID	27969
Firm/DBA Name	MC CULLOUGH CONSTRUCTION INC
Address Line1	57 ALOERGROVE ROAD
Address Line2	

City	ARCATA
State	CA
Zip Code1	95521
Zip Code2	
Mailing Address Line1	57 ALDERGROVE RD
Mailing Address Line2	
Mailing City	ARCATA
Mailing State	CA
Mailing Zip Code1	95521
Mailing Zip Code2	
Certification Type	DBE
EMail	mackymccullough@mccullughconstructioninc.com
Contact Name	MACKY MCCULLOUGH
Area Code	(707)
Phone Number	825-1014
Fax Area Code	(707)
Fax Phone Number	825-1769
Agency Name	DEPARTMENT OF TRANSPORTATION
Counties	00;
Districts	00;
DBE NAICS	212321; 221310; 237310; 237990; 238120; 238910; 532412;
ACDBE NAICS	
Work Codes	B1440 SAND & GRAVEL; C1201 TRAFFIC CONTROL SYSTEM; C1575 REMOVE BRIDGE ITEM; C1580 MODIFY BRIDGE ITEM; C1601 CLEARING & GRUBBING; C1701 DEVELOP WATER SUPPLY; C1901 ROADWAY EXCAVATION; C1920 STRUCTURE EXCAVATION; C1930 STRUCTURE BACKFILL; C1940 DITCHES EXCAVATION; C5501 STEEL STRUCTURES; C5570 STEEL CRIB WALL; C9907 CONSTRUCTION EQUIPMENT RENTAL; C9908 HEAVY EQUIPMENT RENTAL; C9980 DEMOLITION; E4940 WATER SUPPLY; E4970 IRRIGATION SYSTEMS;
Licenses	A General Engineering Contractor;
Trucks	
Gender	M
Ethnicity	NATIVE AMERICAN
Firm Type	DBE

Firm ID	41288
Firm/DBA Name	MEHTA MECHANICAL CO., INC. DBA MMC INC.
Address Line1	5901 FRESCA DRIVE
Address Line2	
City	LA PALMA
State	CA
Zip Code1	90623
Zip Code2	
Mailing Address Line1	
Mailing Address Line2	
Mailing City	
Mailing State	
Mailing Zip Code1	
Mailing Zip Code2	
Certification Type	DBE
EMail	jay@aboutmmc.com
Contact Name	JAGAT MEHTA
Area Code	(714)
Phone Number	521-2022
Fax Area Code	(714)
Fax Phone Number	521-2440
Agency Name	LOS ANGELES COUNTY METRO TRANSPORTATION AUTHORITY (MTA)
Counties	00;
Districts	00;

DBE NAICS	221310; 237110; 237990;
ACDBE NAICS	
Work Codes	C8710 ENGINEERING; E4940 WATER SUPPLY; E4952 SEWERAGE SYSTEMS; E4970 IRRIGATION SYSTEMS;
Licenses	A General Engineering Contractor; B General Building Contractor; C11 Elevator Contractor; D21 Machinery and Pumps;
Trucks	
Gender	M
Ethnicity	ASIAN SUBCONTINENT
Firm Type	DBE

Firm ID	40349
Firm/DBA Name	MERCADE CONSTRUCTION & DEVELOPMENT INC.
Address Line1	21168 POKIE DR.
Address Line2	
City	SOULSBYVILLE
State	CA
Zip Code1	95372
Zip Code2	
Mailing Address Line1	P. O. BOX 98
Mailing Address Line2	
Mailing City	TWAIN HARTE
Mailing State	CA
Mailing Zip Code1	95383
Mailing Zip Code2	
Certification Type	DBE
EMail	jorge@mercadeco.com
Contact Name	JORGE LUIS MERCADE
Area Code	(209)
Phone Number	586-7722
Fax Area Code	(209)
Fax Phone Number	532-7744
Agency Name	DEPARTMENT OF TRANSPORTATION
Counties	02; 05; 10; 20; 21; 22; 24; 34; 49; 50; 55;
Districts	03; 04; 06; 10;
DBE NAICS	236115; 236220; 237310; 237990; 238910;
ACDBE NAICS	
Work Codes	C8000 FENCING CONTRACTOR; C9801 BUILDING CONSTRUCTION;
Licenses	A General Engineering Contractor; B General Building Contractor;
Trucks	
Gender	M
Ethnicity	HISPANIC
Firm Type	DBE

Firm ID	41655
Firm/DBA Name	MISSION CONSTRUCTORS, INC.
Address Line1	2177 JERROLD AVE., #201
Address Line2	
City	SAN FRANCISCO
State	CA
Zip Code1	94124
Zip Code2	
Mailing Address Line1	
Mailing Address Line2	
Mailing City	

Mailing State	
Mailing Zip Code1	
Mailing Zip Code2	
Certification Type	DBE
Mail	jaime@missionconst.com
Contact Name	JAIME GONZALEZ
Area Code	(415)
Phone Number	282-8453
Fax Area Code	(415)
Fax Phone Number	282-8455
Agency Name	SAN FRANCISCO MUNICIPAL TRANSPORTATION AGENCY
Counties	10; 27; 38; 41; 43; 44;
Districts	04; 05; 06;
DBE NAICS	236210; 237110; 237120; 237990;
ACDBE NAICS	
Work Codes	C8775 Construction Management - Oil and Gas Pipeline and Releted Structure Construction; C8776 Construction Management - Other Heavy and Civil Construction; C8778 Construction Management - Water and Sewer Line and Related Structure Construction; C9802 BUILDING CONSTRUCTION;
Licenses	A General Engineering Contractor; B General Building Contractor;
Trucks	
Gender	M
Ethnicity	HISPANIC
Firm Type	DBE

Firm ID	4830
Firm/DBA Name	MLE ENVIRONMENTAL TECHNOLOGIES, INC.
Address Line1	11511 RAGUSA DRIVE
Address Line2	
City	RANCHO CUCAMONGA
State	CA
Zip Code1	91701
Zip Code2	
Mailing Address Line1	P.O. BOX 4606
Mailing Address Line2	
Mailing City	RANCHO CUCAMONGA
Mailing State	CA
Mailing Zip Code1	91729
Mailing Zip Code2	
Certification Type	DBE
EMail	vmuniz@charter.net
Contact Name	VICTOR MUNIZ
Area Code	(909)
Phone Number	989-7191
Fax Area Code	(909)
Fax Phone Number	989-4791
Agency Name	CITY OF LOS ANGELES
Counties	00;
Districts	00;
DBE NAICS	236220; 541330; 541620; 541690; 562910;
ACDBE NAICS	
Work Codes	C1601 CLEARING & GRUBBING; C1901 ROADWAY EXCAVATION; C1920 STRUCTURE EXCAVATION; C1930 STRUCTURE BACKFILL; C1940 DITCHES EXCAVATION; C8700 CONSULTANT, NON ENGINEERING; C8730 SAFETY STUDIES; C9980 DEMOLITION; E4954 HAZARDOUS WASTE COLLECTION AND DISPOSAL; J9510 ENVIRONMENTAL QUALITY;
Licenses	A General Engineering Contractor; ASB Asbestos; B General Building Contractor; C21 Building Moving / Demolition Contractor; HAZ Hazardous Waste;

Trucks	
Gender	M
Ethnicity	HISPANIC
Firm Type	DBE

Firm ID	33488
Firm/DBA Name	MLS CONSTRUCTION
Address Line1	368 31ST AVENUE
Address Line2	
City	SAN FRANCISCO
State	CA
Zip Code1	94121
Zip Code2	
Mailing Address Line1	
Mailing Address Line2	
Mailing City	
Mailing State	
Mailing Zip Code1	
Mailing Zip Code2	
Certification Type	DBE
EMail	stomls-office@yahoo.com
Contact Name	null STANLEY TO
Area Code	(415)
Phone Number	752-7521
Fax Area Code	(415)
Fax Phone Number	752-7537
Agency Name	SAN FRANCISCO MUNICIPAL TRANSPORTATION AGENCY
Counties	00;
Districts	00;
DBE NAICS	237310; 237990; 238110;

ACDBE NAICS

Work Codes	C0651 CONCRETE & CEMENT SUPPLIER; C5501 STEEL STRUCTURES; C8710 ENGINEERING; C9802 BUILDING CONSTRUCTION;
Licenses	A General Engineering Contractor; B General Building Contractor; C08 Concrete Contractor; C50 Reinforcing Steel Contractor;
Trucks	
Gender	M
Ethnicity	ASIAN PACIFIC
Firm Type	DBE

Firm ID	38491
Firm/DBA Name	MORAS EQUIPMENT AND CONSTRUCTION, INC.
Address Line1	9245 NAN ST.
Address Line2	
City	PICO RIVERA
State	CA
Zip Code1	90660
Zip Code2	
Mailing Address Line1	
Mailing Address Line2	
Mailing City	
Mailing State	
Mailing Zip Code1	
Mailing Zip Code2	
Certification Type	DBE
EMail	info@morasequipment.com
Contact Name	DAVID MORA

Area Code	(562)
Phone Number	949-6777
Fax Area Code	(562)
Fax Phone Number	395-5555
Agency Name	DEPARTMENT OF TRANSPORTATION
Counties	10; 19; 27; 28; 30; 33; 34; 36; 37; 38; 39; 40; 41; 42; 43; 44; 56;
Districts	03; 04; 05; 06; 07; 08; 10; 11; 12;
DBE NAICS	237110; 237120; 237130; 238140; 532412;

ACDBE NAICS

Work Codes	C8775 Construction Management - Oil and Gas Pipeline and Releted Structure Construction; C8777 Construction Management - Power and Communication Line and Related Structure Construction; C8778 Construction Management - Water and Sewer Line and Related Structure Construction; C9907 CONSTRUCTION EQUIPMENT RENTAL;
Licenses	A General Engineering Contractor;
Trucks	
Gender	M
Ethnicity	HISPANIC
Firm Type	DBE

Firm ID	40840
Firm/DBA Name	MV CONSTRUCTION, INC.
Address Line1	PO BOX 1575
Address Line2	
City	ATWATER
State	CA
Zip Code1	95301
Zip Code2	
Mailing Address Line1	5610 ZEINER CT.
Mailing Address Line2	
Mailing City	ATWATER
Mailing State	CA
Mailing Zip Code1	95301
Mailing Zip Code2	
Certification Type	DBE
EMail	valdez05@gmail.com
Contact Name	MANUEL VALDEZ
Area Code	(209)
Phone Number	756-5936
Fax Area Code	(559)
Fax Phone Number	357-0851
Agency Name	CITY OF FRESNO
Counties	02; 03; 05; 06; 10; 15; 20; 21; 22; 24; 26; 27; 28; 34; 39; 40; 41; 42; 43; 44; 49; 50; 52; 54; 55; 56; 57; 58;
Districts	02; 03; 04; 05; 06; 07; 09; 10;
DBE NAICS	237310; 237990; 238910; 238990;

ACDBE NAICS

Work Codes	C1901 ROADWAY EXCAVATION; C1910 GRADING; C2602 AGGREGATE BASE; C3901 ASPHALT CONCRETE; C5105 MINOR CONCRETE STRUCTURE;
Licenses	A General Engineering Contractor;
Trucks	
Gender	M
Ethnicity	HISPANIC
Firm Type	DBE

Firm ID	39453
Firm/DBA Name	N B G CONSTRUCTION SERVICES

Address Line1	14 CUERVO STREET
Address Line2	
City	RNCHO STA MARGARITA
State	CA
Zip Code1	92688
Zip Code2	
Mailing Address Line1	
Mailing Address Line2	
Mailing City	
Mailing State	
Mailing Zip Code1	
Mailing Zip Code2	
Certification Type	DBE
EMail	anichols_nbgcs@cox.net
Contact Name	ALLEN NICHOLS
Area Code	(949)
Phone Number	283-5757
Fax Area Code	(949)
Fax Phone Number	589-6897
Agency Name	DEPARTMENT OF TRANSPORTATION
Counties	01; 02; 03; 04; 05; 06; 07; 08; 09; 10; 11; 12; 13; 14; 15; 16; 17; 18; 19; 20; 21; 22; 23; 24; 25; 26; 27; 28; 29; 30; 31; 32; 33; 34; 35; 36; 37; 38; 39; 40; 41; 42; 43; 44; 45; 46; 47; 48; 49; 50; 51; 52; 53; 54; 55; 56; 57; 58;
Districts	01; 02; 03; 04; 05; 06; 07; 08; 09; 10; 11; 12;
DBE NAICS	237310; 541690;

ACDBE NAICS

Work Codes	C8730 SAFETY STUDIES; C8776 Construction Management - Other Heavy and Civil Construction; C8794 Environmental - Water Quality;
Licenses	A General Engineering Contractor;
Trucks	
Gender	M
Ethnicity	BLACK
Firm Type	DBE

Firm ID	35776
Firm/DBA Name	NEW CREATION BUILDERS
Address Line1	17809 CLARK AVENUE
Address Line2	
City	BELLFLOWER
State	CA
Zip Code1	90706
Zip Code2	
Mailing Address Line1	
Mailing Address Line2	
Mailing City	
Mailing State	
Mailing Zip Code1	
Mailing Zip Code2	
Certification Type	DBE
EMail	bc@newcreationbuilders.com
Contact Name	BRIAN CHUN
Area Code	(562)
Phone Number	804-0478
Fax Area Code	(562)
Fax Phone Number	804-0488
Agency Name	CITY OF LOS ANGELES
Counties	00;
Districts	00;

DBE NAICS	236116; 236210; 236220;
ACDBE NAICS	
Work Codes	C9801 BUILDING CONSTRUCTION;
Licenses	A General Engineering Contractor; B General Building Contractor; EC Civil Engineer;
Trucks	
Gender	M
Ethnicity	ASIAN PACIFIC
Firm Type	DBE

Firm ID	32107
Firm/DBA Name	NIELSON CONSTRUCTION
Address Line1	147 CAMINO ORUGA
Address Line2	
City	NAPA
State	CA
Zip Code1	94558
Zip Code2	
Mailing Address Line1	
Mailing Address Line2	
Mailing City	
Mailing State	
Mailing Zip Code1	
Mailing Zip Code2	
Certification Type	DBE
EMail	dnielson@nielsoninc.com
Contact Name	DIANN NIELSON
Area Code	(707)
Phone Number	253-8774
Fax Area Code	(707)
Fax Phone Number	253-0131
Agency Name	BAY AREA RAPID TRANSIT DISTRICT (BART)
Counties	01; 02; 03; 04; 05; 06; 07; 08; 09; 10; 11; 12; 14; 15; 16; 17; 18; 20; 21; 22; 23; 24; 25; 26; 27; 28; 29; 31; 32; 34; 38; 39; 40; 41; 43; 44; 45; 46; 47; 48; 49; 50; 51; 52; 53; 54; 55; 57; 58;
Districts	01; 02; 03; 04; 05; 06; 09; 10;
DBE NAICS	237310; 238910; 238990;
ACDBE NAICS	
Work Codes	C1601 CLEARING & GRUBBING; C1901 ROADWAY EXCAVATION; C1920 STRUCTURE EXCAVATION; C1930 STRUCTURE BACKFILL; C1940 DITCHES EXCAVATION; C9980 DEMOLITION;
Licenses	A General Engineering Contractor;
Trucks	
Gender	F
Ethnicity	CAUCASIAN
Firm Type	DBE

Firm ID	39231
Firm/DBA Name	NORCAL GENERAL CONSTRUCTION CORP
Address Line1	555 E CAPITAL AVE
Address Line2	
City	MILPITAS
State	CA
Zip Code1	95035
Zip Code2	
Mailing Address Line1	1950 MAJESTIC COURT
Mailing Address Line2	
Mailing City	SAN JOSE

Mailing State	CA
Mailing Zip Code1	95132
Mailing Zip Code2	
Certification Type	DBE
EMail	norcalgeneralconstruction@yahoo.com
Contact Name	KENNY PHAN
Area Code	(408)
Phone Number	886-0335
Fax Area Code	(408)
Fax Phone Number	969-1650
Agency Name	SANTA CLARA VALLEY TRANSPORTATION AUTHORITY (VTA)
Counties	01; 07; 10; 16; 24; 27; 28; 34; 38; 40; 41; 42; 43; 44; 48; 49;
Districts	03; 04; 05; 06; 10;
DBE NAICS	236115; 237310; 238120; 238210; 541330; 561730;

ACDBE NAICS

Work Codes	C3910 PAVING ASPHALT (ASPHALT CONCRETE); C8602 SIGNAL & LIGHTING; C8740 ELECTRICAL ENGINEERS; C9810 SMALL STRUCTURES; C9858 RESIDENTIAL ELECTRICAL;
Licenses	A General Engineering Contractor; C10 Electrical Contractor;
Trucks	
Gender	M
Ethnicity	ASIAN PACIFIC
Firm Type	DBE

Firm ID	41185
Firm/DBA Name	NORIEGA PIPELINE, INC.
Address Line1	13052 WHITTRAM AVENUE
Address Line2	
City	RANCHO CUCAMONGA
State	CA
Zip Code1	91739
Zip Code2	
Mailing Address Line1	
Mailing Address Line2	
Mailing City	
Mailing State	
Mailing Zip Code1	
Mailing Zip Code2	
Certification Type	DBE
EMail	noriegav@sbcglobal.net
Contact Name	JOSEPH NORIEGA
Area Code	(909)
Phone Number	463-4882
Fax Area Code	(909)
Fax Phone Number	463-4890
Agency Name	LOS ANGELES COUNTY METRO TRANSPORTATION AUTHORITY (MTA)
Counties	00;
Districts	00;
DBE NAICS	237310; 237990; 238910; 532412;

ACDBE NAICS

Work Codes	A0710 SOIL PREPARATION SERVICES; A0850 FORESTRY SERVICES; C9802 BUILDING CONSTRUCTION; D3530 CONSTRUCTION & RELATED MACHINERY; D3660 COMMUNICATIONS EQUIPMENT;
Licenses	A General Engineering Contractor;
Trucks	
Gender	M
Ethnicity	HISPANIC

Firm Type	DBE

Firm ID	35955
Firm/DBA Name	Newland Entities, Inc
ddress Line1	335 TEEGARDEN AVENUE
Address Line2	
City	YUBA CITY
State	CA
Zip Code1	95992
Zip Code2	
Mailing Address Line1	
Mailing Address Line2	
Mailing City	
Mailing State	
Mailing Zip Code1	
Mailing Zip Code2	
Certification Type	DBE
EMail	rcervantes@newlandentities.com
Contact Name	ROBERT CERVANTES
Area Code	(530)
Phone Number	755-1178
Fax Area Code	(530)
Fax Phone Number	674-0756
Agency Name	YOLO COUNTY TRANSPORTATION DISTRICT
Counties	01; 03; 04; 05; 06; 07; 08; 09; 10; 13; 14; 15; 16; 18; 19; 20; 21; 22; 23; 24; 27; 28; 29; 31; 33; 34; 36; 37; 38; 39; 40; 41; 42; 43; 44; 48; 49; 51; 54; 55; 56; 57; 58;
Districts	01; 02; 03; 04; 05; 06; 07; 08; 09; 10; 11;
DBE NAICS	237110; 237130; 237310; 237990; 238910;
ACDBE NAICS	
Work Codes	C1580 MODIFY BRIDGE ITEM; C1901 ROADWAY EXCAVATION; C2201 FINISHING ROADWAY; C3901 ASPHALT CONCRETE; C9860 WATER METER & TEMP FACILITIES; C9872 SEWER CONNECTION;
Licenses	A General Engineering Contractor;
Trucks	
Gender	M
Ethnicity	HISPANIC
Firm Type	DBE

Firm ID	35209
Firm/DBA Name	OLIVER TRANSBAY CONSTRUCTION INC
Address Line1	1485 BAYSHORE BOULEVARD SUITE 324-B77
Address Line2	
City	SAN FRANCISCO
State	CA
Zip Code1	94124
Zip Code2	
Mailing Address Line1	
Mailing Address Line2	
Mailing City	
Mailing State	
Mailing Zip Code1	
Mailing Zip Code2	
Certification Type	DBE
EMail	flotbc@sbcglobal.net
Contact Name	FRANK OLIVER
Area Code	(415)
Phone Number	330-0904
Fax Area Code	(415)

Fax Phone Number	330-0934
Agency Name	SAN FRANCISCO MUNICIPAL TRANSPORTATION AGENCY
Counties	01; 03; 05; 07; 10; 16; 20; 21; 22; 24; 27; 28; 35; 39; 41; 43; 44; 48; 49; 50; 54; 55;
Districts	04; 05; 06; 10;
DBE NAICS	236210; 237990; 238910; 562112;

ACDBE NAICS

Work Codes	C1920 STRUCTURE EXCAVATION; C1930 STRUCTURE BACKFILL; C9632 HAZARDOUS SUBSTANCE REMOVAL; C9801 BUILDING CONSTRUCTION; C9980 DEMOLITION;
Licenses	A General Engineering Contractor; B General Building Contractor; C21 Building Moving / Demolition Contractor;
Trucks	
Gender	M
Ethnicity	BLACK
Firm Type	DBE

Firm ID	22322
Firm/DBA Name	OST TRUCKS AND CRANES, INC.
Address Line1	2951 N. VENTURA AVENUE
Address Line2	
City	VENTURA
State	CA
Zip Code1	93001
Zip Code2	
Mailing Address Line1	PO BOX 237
Mailing Address Line2	
Mailing City	VENTURA
Mailing State	CA
Mailing Zip Code1	93002
Mailing Zip Code2	
Certification Type	DBE
EMail	ostcranes@aol.com
Contact Name	LEON DENNIS ZERMENO
Area Code	(805)
Phone Number	643-9963
Fax Area Code	(805)
Fax Phone Number	643-7618
Agency Name	CITY OF LOS ANGELES
Counties	10; 13; 14; 15; 16; 19; 27; 30; 33; 35; 36; 37; 40; 42; 54; 56;
Districts	05; 06; 07; 08; 09; 11; 12;
DBE NAICS	237990; 238990; 484110; 484121; 484220; 484230; 493110; 493190; 562112;

ACDBE NAICS

Work Codes	C9774 TRUCKER; C9907 CONSTRUCTION EQUIPMENT RENTAL; C9908 HEAVY EQUIPMENT RENTAL; E4954 HAZARDOUS WASTE COLLECTION AND DISPOSAL;
Licenses	A General Engineering Contractor; HAZ Hazardous Waste;
Trucks	
Gender	M
Ethnicity	HISPANIC
Firm Type	DBE

Firm ID	36058
Firm/DBA Name	OSTOVANI & ASSOCIATES, INC.
Address Line1	481-B E. WHITTIER BLVD.
Address Line2	
City	LA HABRA
State	CA

Zip Code1	90631
Zip Code2	
Mailing Address Line1	
Mailing Address Line2	
Mailing City	
Mailing State	
Mailing Zip Code1	
Mailing Zip Code2	
Certification Type	DBE
EMail	ostovani@earthlink.net
Contact Name	K. JIM OSTOVANI
Area Code	(562)
Phone Number	691-1426
Fax Area Code	(562)
Fax Phone Number	691-9831
Agency Name	CITY OF LOS ANGELES
Counties	00;
Districts	00;
DBE NAICS	236210; 237130; 237990; 238210; 541330; 541611;

ACDBE NAICS

Work Codes	C8710 ENGINEERING; C8740 ELECTRICAL ENGINEERS; C9801 BUILDING CONSTRUCTION;
Licenses	A General Engineering Contractor; B General Building Contractor; C10 Electrical Contractor; EE Electrical Engineer ;
Trucks	
Gender	M
Ethnicity	OTHER
Firm Type	DBE

Firm ID	27179
Firm/DBA Name	P. A. WILSON, INC.
Address Line1	9485 LA CUESTA DR
Address Line2	
City	LA MESA
State	CA
Zip Code1	91941
Zip Code2	
Mailing Address Line1	3131 INDIAN MILLS
Mailing Address Line2	
Mailing City	JAMUL
Mailing State	CA
Mailing Zip Code1	91935
Mailing Zip Code2	
Certification Type	DBE
EMail	pawilsoninc@gmail.com
Contact Name	PATRICK ALLEN WILSON
Area Code	( )
Phone Number	
Fax Area Code	( )
Fax Phone Number	
Agency Name	DEPARTMENT OF TRANSPORTATION
Counties	00;
Districts	00;
DBE NAICS	236210; 237110; 237120; 238110; 238120; 238910;

ACDBE NAICS

C1601 CLEARING & GRUBBING; C1901 ROADWAY EXCAVATION; C1920 STRUCTURE EXCAVATION;

Work Codes	C1930 STRUCTURE BACKFILL; C1940 DITCHES EXCAVATION; C5501 STEEL STRUCTURES; C5570 STEEL CRIB WALL; C9836 PLASTERING; C9980 DEMOLITION; E4952 SEWERAGE SYSTEMS;
Licenses	A General Engineering Contractor; B General Building Contractor; C09 Drywall Contractor; C33 Painting and Decorating Contractor; D12 Synthetic Products;
Trucks	
Gender	M
Ethnicity	NATIVE AMERICAN
Firm Type	DBE

Firm ID	30729
Firm/DBA Name	PACIFIC UTILITY CONSTRUCTION
Address Line1	1350 E. BEAMER STREET
Address Line2	
City	WOODLAND
State	CA
Zip Code1	95776
Zip Code2	6003
Mailing Address Line1	1350 E. BEAMER STREET
Mailing Address Line2	
Mailing City	WOODLAND
Mailing State	CA
Mailing Zip Code1	95776
Mailing Zip Code2	6003
Certification Type	DBE
EMail	jsouza@pacificutilityconstruction.com
Contact Name	JOSEPH EDWARD SOUZA
Area Code	(530)
Phone Number	669-7812
Fax Area Code	(530)
Fax Phone Number	669-7836
Agency Name	DEPARTMENT OF TRANSPORTATION
Counties	01; 02; 03; 04; 05; 06; 07; 08; 09; 10; 11; 12; 16; 17; 18; 20; 21; 22; 23; 24; 25; 26; 27; 28; 29; 31; 32; 34; 35; 38; 39; 40; 41; 42; 43; 44; 45; 46; 47; 48; 49; 50; 51; 52; 53; 55; 57; 58;
Districts	01; 02; 03; 04; 05; 06; 09; 10;
DBE NAICS	237310; 238990;

ACDBE NAICS

Work Codes	C7601 DIRECTIONAL BORING/DRILLING; C9872 SEWER CONNECTION;
Licenses	A General Engineering Contractor;
Trucks	
Gender	M
Ethnicity	HISPANIC
Firm Type	DBE

Firm ID	25399
Firm/DBA Name	PANACEA, INC.
Address Line1	14905 PARAMOUNT BLVD., SUITE H
Address Line2	
City	PARAMOUNT
State	CA
Zip Code1	90723
Zip Code2	
Mailing Address Line1	
Mailing Address Line2	
Mailing City	
Mailing State	
Mailing Zip Code1	
Mailing Zip Code2	
Certification Type	DBE

EMail	hchou@panenv.com
Contact Name	KAREN SHUI
Area Code	(562)
Phone Number	860-2869
Fax Area Code	(562)
Fax Phone Number	633-3180
Agency Name	DEPARTMENT OF TRANSPORTATION
Counties	00;
Districts	00;
DBE NAICS	236210; 236220; 541620; 561210; 562910;
ACDBE NAICS	
Work Codes	C8707 FEASIBILITY STUDIES; C8730 SAFETY STUDIES; C9801 BUILDING CONSTRUCTION; C9810 SMALL STRUCTURES;
Licenses	A General Engineering Contractor; B General Building Contractor; HAZ Hazardous Waste;
Trucks	
Gender	M
Ethnicity	ASIAN PACIFIC
Firm Type	DBE

Firm ID	39218
Firm/DBA Name	PC&N CONSTRUCTION, INC
Address Line1	5301-F BYRON HOT SPRINGS ROAD
Address Line2	
City	BYRON
State	CA
Zip Code1	94514
Zip Code2	
Mailing Address Line1	
Mailing Address Line2	
Mailing City	
Mailing State	
Mailing Zip Code1	
Mailing Zip Code2	
Certification Type	DBE
EMail	cplum@pcnconstructioninc.com
Contact Name	CHRISTI PLUM
Area Code	(925)
Phone Number	634-4567
Fax Area Code	(925)
Fax Phone Number	634-4339
Agency Name	BAY AREA RAPID TRANSIT DISTRICT (BART)
Counties	01; 02; 03; 04; 05; 06; 07; 09; 10; 11; 12; 16; 17; 18; 20; 21; 22; 23; 24; 26; 27; 28; 29; 31; 32; 34; 35; 38; 39; 40; 41; 43; 44; 45; 46; 47; 48; 49; 50; 51; 52; 53; 54; 55; 57; 58;
Districts	01; 02; 03; 04; 05; 06; 09; 10;
DBE NAICS	237310;
ACDBE NAICS	
Work Codes	C0683 GUARD RAILINGS & BARRIERS SUPPLIER; C8320 METAL BEAM GUARD RAILING; C8391 METAL BEAM BARRIER;
Licenses	A General Engineering Contractor;
Trucks	
Gender	F
Ethnicity	CAUCASIAN
Firm Type	DBE

Firm ID	2406

Firm/DBA Name	PELESA INC.
Address Line1	1153 GREEN STREET
Address Line2	
City	GLENDALE
State	CA
Zip Code1	91205
Zip Code2	
Mailing Address Line1	
Mailing Address Line2	
Mailing City	
Mailing State	
Mailing Zip Code1	
Mailing Zip Code2	
Certification Type	DBE
EMail	leasha5@aol.com
Contact Name	DEBORAH BERMUDEZ
Area Code	(818)
Phone Number	247-5163
Fax Area Code	(818)
Fax Phone Number	247-8760
Agency Name	DEPARTMENT OF TRANSPORTATION
Counties	10; 19; 36; 37;
Districts	06; 07; 08; 11;
DBE NAICS	237110; 238910; 238990; 541990;

ACDBE NAICS

Work Codes	C1601 CLEARING & GRUBBING; C1901 ROADWAY EXCAVATION; C1920 STRUCTURE EXCAVATION; C1930 STRUCTURE BACKFILL; C1940 DITCHES EXCAVATION; C7112 REINFORCED CONCRETE SEWER PIPE;
Licenses	A General Engineering Contractor;
Trucks	
Gender	M
Ethnicity	HISPANIC
Firm Type	DBE

Firm ID	24274
Firm/DBA Name	PETROSIUS CONSTRUCTION,INC
Address Line1	1110 NORTH CAIN STREET
Address Line2	
City	VISALIA
State	CA
Zip Code1	93292
Zip Code2	
Mailing Address Line1	
Mailing Address Line2	
Mailing City	
Mailing State	
Mailing Zip Code1	
Mailing Zip Code2	
Certification Type	DBE
EMail	petrosius@lycos.com
Contact Name	KAREN MENDONCA
Area Code	(559)
Phone Number	733-4388
Fax Area Code	(559)
Fax Phone Number	732-9587
Agency Name	DEPARTMENT OF TRANSPORTATION
Counties	10; 15; 16; 20; 22; 24; 54;

Districts	06; 10;
DBE NAICS	237110; 238910; 238990; 562211; 562219; 562910; 811310;

ACDBE NAICS

Work Codes	C9632 HAZARDOUS SUBSTANCE REMOVAL; C9633 HAZARDOUS WASTE TRUCKING; C9828 CRANE WORK; E4954 HAZARDOUS WASTE COLLECTION AND DISPOSAL;
Licenses	A General Engineering Contractor; HAZ Hazardous Waste;
Trucks	FOR HIRE - 1;
Gender	M
Ethnicity	NATIVE AMERICAN
Firm Type	DBE

Firm ID	33448
Firm/DBA Name	PHOENIX ELECTRIC COMPANY
Address Line1	1300 VAN DYKE AVENUE
Address Line2	
City	SAN FRANCISCO
State	CA
Zip Code1	94124
Zip Code2	
Mailing Address Line1	1350 VAN DYKE AVENUE
Mailing Address Line2	
Mailing City	SAN FRANCISCO
Mailing State	CA
Mailing Zip Code1	94124
Mailing Zip Code2	
Certification Type	DBE
EMail	dlau@phoenixelectricco.com
Contact Name	null DAVID LAU
Area Code	(415)
Phone Number	671-3858
Fax Area Code	(415)
Fax Phone Number	671-3827
Agency Name	SAN FRANCISCO MUNICIPAL TRANSPORTATION AGENCY
Counties	00;
Districts	00;
DBE NAICS	237990; 238210;

ACDBE NAICS

Work Codes	C8740 ELECTRICAL ENGINEERS;
Licenses	A General Engineering Contractor; C10 Electrical Contractor;
Trucks	
Gender	M
Ethnicity	ASIAN PACIFIC
Firm Type	DBE

Firm ID	40529
Firm/DBA Name	PK CONSTRUCTION
Address Line1	2502 EL SOL
Address Line2	
City	ALTADENA
State	CA
Zip Code1	91001
Zip Code2	
Mailing Address Line1	
Mailing Address Line2	

Mailing City	
Mailing State	
Mailing Zip Code1	
Mailing Zip Code2	
Certification Type	DBE
EMail	zkkingpk81@gmail.com
Contact Name	ZHAN PAUL KING
Area Code	(626)
Phone Number	773-6963
Fax Area Code	(626)
Fax Phone Number	486-4152
Agency Name	DEPARTMENT OF TRANSPORTATION
Counties	07; 10; 19; 22; 27; 33; 34; 40; 41; 42; 43; 48; 54; 56;
Districts	03; 04; 05; 06; 07; 08; 10;
DBE NAICS	237110; 237310; 238110;

ACDBE NAICS

Work Codes	C2800 CONCRETE BASE; C5100 CONCRETE STRUCTURE; C5105 MINOR CONCRETE STRUCTURE;
Licenses	A General Engineering Contractor; B General Building Contractor; C08 Concrete Contractor;
Trucks	
Gender	M
Ethnicity	BLACK
Firm Type	DBE

Firm ID	3065
Firm/DBA Name	PSC ASSOCIATES, INC
Address Line1	1485 BAYSHORE BOULEVARD, # 104
Address Line2	
City	SAN FRANCISCO
State	CA
Zip Code1	94124
Zip Code2	
Mailing Address Line1	1485 BAYSHORE BOULEVARD #104
Mailing Address Line2	
Mailing City	SAN FRANCISCO
Mailing State	CA
Mailing Zip Code1	94124
Mailing Zip Code2	
Certification Type	DBE
EMail	peter@psctesting.com
Contact Name	PETER S. CHAN
Area Code	(415)
Phone Number	330-6100
Fax Area Code	(415)
Fax Phone Number	330-6363
Agency Name	DEPARTMENT OF TRANSPORTATION
Counties	00;
Districts	00;
DBE NAICS	237310; 541380; 541490; 541618; 541690;

ACDBE NAICS

Work Codes	C8700 CONSULTANT, NON ENGINEERING; C8701 BUSINESS ADMINISTRATION; C8702 MANAGEMENT INFORMATION SYSTEMS; C8705 DESIGN; C8706 DESIGN BRIDGES; C8722 ENVIRONMENTAL ENGINEER; I8734 LABORATORY TESTING AND ANALYSIS;
Licenses	A General Engineering Contractor; ASB Asbestos; HAZ Hazardous Waste;
Trucks	
Gender	M

Ethnicity	ASIAN PACIFIC
Firm Type	DBE

Firm ID	41743
Firm/DBA Name	QUANTUM CONSTRUCTION COMPANY
Address Line1	6083 NORTH FIGARDEN DRIVE # 140
Address Line2	
City	FRESNO
State	CA
Zip Code1	93722
Zip Code2	
Mailing Address Line1	
Mailing Address Line2	
Mailing City	
Mailing State	
Mailing Zip Code1	
Mailing Zip Code2	
Certification Type	DBE
EMail	david.soto@quantumconstructionco.com
Contact Name	DAVID SOTO
Area Code	(559)
Phone Number	431-7940
Fax Area Code	(559)
Fax Phone Number	431-7940
Agency Name	CITY OF FRESNO
Counties	07; 10; 15; 16; 20; 22; 24; 27; 40; 42; 44; 50; 54; 56;
Districts	04; 05; 06; 07; 10;
DBE NAICS	237310; 237990; 238110; 238990; 423320; 541618;

CDBE NAICS

Work Codes	C5105 MINOR CONCRETE STRUCTURE; C7301 CONCRETE CURB & SIDEWALK - MISC; C8700 CONSULTANT, NON ENGINEERING; C8714 CONSULTANT, PROJECT MANAGEMENT/ BUSINESS ADMIN; C8773 Construction Management - Highway, Street and Bridge Construction; C8776 Construction Management - Other Heavy and Civil Construction;
Licenses	A General Engineering Contractor;
Trucks	
Gender	M
Ethnicity	HISPANIC
Firm Type	DBE

Firm ID	36909
Firm/DBA Name	R & C CONSTRUCTION
Address Line1	2946 S. ELM AVENUE
Address Line2	
City	FRESNO
State	CA
Zip Code1	93706
Zip Code2	
Mailing Address Line1	
Mailing Address Line2	
Mailing City	
Mailing State	
Mailing Zip Code1	
Mailing Zip Code2	
Certification Type	DBE
EMail	randcconstruction@sbcglobal.net
Contact Name	RICHARD R. GARCIA
Area Code	(559)
Phone Number	255-5655

Fax Area Code	(559)
Fax Phone Number	255-5600
Agency Name	CITY OF FRESNO
Counties	10; 15; 16; 20; 24; 54;
Districts	06; 10;
DBE NAICS	237310; 237990; 238110;

ACDBE NAICS

Work Codes	C1901 ROADWAY EXCAVATION; C1910 GRADING; C3701 SEAL COAT; C3901 ASPHALT CONCRETE; C4010 PORTLAND CEMENT & CONCRETE PAVEMENT;
Licenses	A General Engineering Contractor;
Trucks	
Gender	M
Ethnicity	HISPANIC
Firm Type	DBE

Firm ID	25467
Firm/DBA Name	R. D. HORN CONSTRUCTION COMPANY
Address Line1	1209 W. KEARNEY
Address Line2	
City	FRESNO
State	CA
Zip Code1	93706
Zip Code2	
Mailing Address Line1	
Mailing Address Line2	
Mailing City	
Mailing State	
Mailing Zip Code1	
Mailing Zip Code2	
Certification Type	DBE
EMail	rdhorncompany@gmail.com
Contact Name	RONALD HORN
Area Code	(559)
Phone Number	513-4615
Fax Area Code	( )
Fax Phone Number	
Agency Name	CITY OF FRESNO
Counties	10; 15; 16; 19; 20; 30; 33; 37; 54;
Districts	06; 07; 08; 11; 12;
DBE NAICS	237110; 237120; 237990; 238990;

ACDBE NAICS

Work Codes	C6401 ASBESTOS-CEMENT PIPE; C6650 CORRUGATED METAL PIPE (CSP); C6800 SUBSURFACE DRAIN; C7000 PLASTIC PIPE; C7041 JACKED WELDED STEEL PIPE; C7112 REINFORCED CONCRETE SEWER PIPE; C7140 CLAY SEWER PIPE; C7160 ASBESTOS-CEMENT SEWER PIPE; C9872 SEWER CONNECTION;
Licenses	A General Engineering Contractor;
Trucks	
Gender	M
Ethnicity	BLACK
Firm Type	DBE

Firm ID	39828
Firm/DBA Name	R. DUGAN CONSTRUCTION
Address Line1	6157 MARLATT STREET
Address Line2	

City	MIRA LOMA
State	CA
Zip Code1	91752
Zip Code2	
Mailing Address Line1	
Mailing Address Line2	
Mailing City	
Mailing State	
Mailing Zip Code1	
Mailing Zip Code2	
Certification Type	DBE
EMail	christina@rduganconst.com;wendyd@rduganconst.com
Contact Name	CHRISTINA DUGAN
Area Code	(951)
Phone Number	360-7531
Fax Area Code	(951)
Fax Phone Number	360-7561
Agency Name	DEPARTMENT OF TRANSPORTATION
Counties	00;
Districts	00;
DBE NAICS	237110; 238110;

ACDBE NAICS

Work Codes	C5100 CONCRETE STRUCTURE; C8778 Construction Management - Water and Sewer Line and Related Structure Construction;
Licenses	A General Engineering Contractor; C08 Concrete Contractor;
Trucks	
Gender	F
Ethnicity	HISPANIC
Firm Type	DBE

Firm ID	29324
Firm/DBA Name	R. E. SERRANO INC.
Address Line1	3430 PACHECO BLVD.
Address Line2	
City	MARTINEZ
State	CA
Zip Code1	94553
Zip Code2	
Mailing Address Line1	
Mailing Address Line2	
Mailing City	
Mailing State	
Mailing Zip Code1	
Mailing Zip Code2	
Certification Type	DBE
EMail	ricky@reserrano.com
Contact Name	RICKY SERRANO
Area Code	(925)
Phone Number	957-8184
Fax Area Code	(925)
Fax Phone Number	957-8121
Agency Name	DEPARTMENT OF TRANSPORTATION
Counties	00;
Districts	00;
DBE NAICS	237310;

ACDBE NAICS

Work Codes	C0651 CONCRETE & CEMENT SUPPLIER; C1201 TRAFFIC CONTROL SYSTEM; C4010 PORTLAND CEMENT & CONCRETE PAVEMENT; C4201 GROOVE & GRIND PAVEMENT; C5135 CONCRETE BLOCK & MASONRY RETAINING WALL; C8331 CONCRETE BARRIER; C8391 METAL BEAM BARRIER; D3270 CONCRETE, GYPSUM, & PLASTER PRODUCTS;
Licenses	A General Engineering Contractor; C29 Masonry Contractor; C31 Construction Zone Traffic Control Contractor;
Trucks	
Gender	M
Ethnicity	HISPANIC
Firm Type	DBE

Firm ID	35197
Firm/DBA Name	RAM CONSTRUCTION & CONCRETE, INC.
Address Line1	1712 BRANCH CREEK STREET
Address Line2	
City	BAKERSFIELD
State	CA
Zip Code1	93312
Zip Code2	
Mailing Address Line1	3844 SANTILLAN ST.
Mailing Address Line2	
Mailing City	BAKERSFIELD
Mailing State	CA
Mailing Zip Code1	93312
Mailing Zip Code2	
Certification Type	DBE
EMail	rambakersfield@yahoo.com
Contact Name	DIANNA MORRIS
Area Code	(661)
Phone Number	589-4726
Fax Area Code	(661)
Fax Phone Number	589-4725
Agency Name	LOS ANGELES COUNTY METRO TRANSPORTATION AUTHORITY (MTA)
Counties	00;
Districts	00;
DBE NAICS	236118; 236210; 236220; 237110;

ACDBE NAICS

Work Codes	C9801 BUILDING CONSTRUCTION; C9810 SMALL STRUCTURES; E4952 SEWERAGE SYSTEMS; H6550 SUBDIVIDERS & DEVELOPERS;
Licenses	A General Engineering Contractor; B General Building Contractor; C08 Concrete Contractor; C36 Plumbing Contractor; D09 Drilling, Blasting and Oil Field Work; D24 Metal Products; D34 Prefabricated Equipment; D63 Construction Cleanup;
Trucks	
Gender	F
Ethnicity	CAUCASIAN
Firm Type	DBE

Firm ID	22173
Firm/DBA Name	RAMINHA CONSTRUCTION, INC.
Address Line1	6805 SYCAMORE RD
Address Line2	
City	ATASCADERO
State	CA
Zip Code1	93422
Zip Code2	
Mailing Address Line1	
Mailing Address Line2	

Mailing City	
Mailing State	
Mailing Zip Code1	
Mailing Zip Code2	
Certification Type	DBE
EMail	RAMINHACONSTRUCTION@GMAIL.COM
Contact Name	DAVID L. RAMINHA
Area Code	(805)
Phone Number	461-0052
Fax Area Code	(805)
Fax Phone Number	461-0053
Agency Name	DEPARTMENT OF TRANSPORTATION
Counties	10; 15; 40; 42; 54;
Districts	05; 06;
DBE NAICS	221310; 237310; 237990; 238910;

ACDBE NAICS

Work Codes	C1601 CLEARING & GRUBBING; C1701 DEVELOP WATER SUPPLY; C1901 ROADWAY EXCAVATION; C1910 GRADING; C1920 STRUCTURE EXCAVATION; C1940 DITCHES EXCAVATION; C2201 FINISHING ROADWAY;
Licenses	A General Engineering Contractor;
Trucks	
Gender	M
Ethnicity	HISPANIC
Firm Type	DBE

Firm ID	29224
Firm/DBA Name	RD CONSTRUCTION GENERAL ENGINEERING, INC.
Address Line1	1026 MEADOW VIEW COURT
Address Line2	
City	CORONA
State	CA
Zip Code1	92880
Zip Code2	
Mailing Address Line1	1026 MEADOWVIEW COURT
Mailing Address Line2	
Mailing City	CORONA
Mailing State	CA
Mailing Zip Code1	92880
Mailing Zip Code2	
Certification Type	DBE
EMail	rdconst69@netzero.com
Contact Name	RUBEN DIAZ
Area Code	(951)
Phone Number	279-5020
Fax Area Code	(951)
Fax Phone Number	279-5020
Agency Name	DEPARTMENT OF TRANSPORTATION
Counties	00;
Districts	00;
DBE NAICS	238110; 238120;

ACDBE NAICS

Work Codes	C5105 MINOR CONCRETE STRUCTURE; C5110 CONCRETE SURFACE FINISH; C5111 CONCRETE OVERLAY, DRILL & BOND;
Licenses	A General Engineering Contractor; C08 Concrete Contractor;
Trucks	

Gender	M
Ethnicity	HISPANIC
Firm Type	DBE

Firm ID	37471
Firm/DBA Name	RIO JORDAN CONSTRUCTION
Address Line1	7432 LEMORAN AVE
Address Line2	
City	PICO RIVERA
State	CA
Zip Code1	90660
Zip Code2	
Mailing Address Line1	
Mailing Address Line2	
Mailing City	
Mailing State	
Mailing Zip Code1	
Mailing Zip Code2	
Certification Type	DBE
EMail	jordan@riojordaninc.com
Contact Name	JORDAN SOTO
Area Code	(562)
Phone Number	942-0228
Fax Area Code	(888)
Fax Phone Number	308-0936
Agency Name	DEPARTMENT OF TRANSPORTATION
Counties	10; 13; 15; 16; 19; 30; 33; 36; 37; 42; 56;
Districts	05; 06; 07; 08; 11; 12;
DBE NAICS	237110; 237310; 237990; 238110;

ACDBE NAICS

Work Codes	C3901 ASPHALT CONCRETE; C5110 CONCRETE SURFACE FINISH; C5135 CONCRETE BLOCK & MASONRY RETAINING WALL;
Licenses	A General Engineering Contractor;
Trucks	
Gender	M
Ethnicity	HISPANIC
Firm Type	DBE

Firm ID	34501
Firm/DBA Name	ROBERT'S BACKHOE SERVICE, INC.
Address Line1	32987 TURTLE DOVE DRIVE
Address Line2	
City	LAKE ELSINORE
State	CA
Zip Code1	92530
Zip Code2	
Mailing Address Line1	
Mailing Address Line2	
Mailing City	
Mailing State	
Mailing Zip Code1	
Mailing Zip Code2	
Certification Type	DBE
EMail	rbsi1997@yahoo.com
Contact Name	ROBERT CERVANTES
Area Code	(909)
Phone Number	678-0813
Fax Area Code	(909)

Fax Phone Number	678-5957
Agency Name	CITY OF LOS ANGELES
Counties	00;
Districts	00;
DBE NAICS	237310; 237990; 238910; 532412;
ACDBE NAICS	
Work Codes	C6200 ALTERNATIVE PIPE CULVERT; C7035 WELDED STEEL PIPE;
Licenses	A General Engineering Contractor;
Trucks	
Gender	M
Ethnicity	HISPANIC
Firm Type	DBE

Firm ID	29435
Firm/DBA Name	RODGERS CONST. & ENGINEERING CO., INC
Address Line1	1807 NAVY DRIVE, SUITE 1
Address Line2	
City	STOCKTON
State	CA
Zip Code1	95206
Zip Code2	
Mailing Address Line1	PO BOX 6885
Mailing Address Line2	
Mailing City	STOCKTON
Mailing State	CA
Mailing Zip Code1	95206
Mailing Zip Code2	
Certification Type	DBE
EMail	rcande@pacbell.net
Contact Name	DAN F. RODGERS
Area Code	(209)
Phone Number	464-5780
Fax Area Code	(209)
Fax Phone Number	464-5782
Agency Name	DEPARTMENT OF TRANSPORTATION
Counties	10; 24; 34; 38; 39; 48; 50; 57;
Districts	03; 04; 06; 10;
DBE NAICS	237310; 237990;
ACDBE NAICS	
Work Codes	C1601 CLEARING & GRUBBING; C1901 ROADWAY EXCAVATION; C1910 GRADING; C2201 FINISHING ROADWAY; C3910 PAVING ASPHALT (ASPHALT CONCRETE); C3940 PLACE ASPHALT CONCRETE DIKE & MISC; C4040 CLEAN & SEAL PAVEMENT JOINTS - ROUT & SEAL CRACKS; C4201 GROOVE & GRIND PAVEMENT; C9981 BUILDING MOVER;
Licenses	A General Engineering Contractor;
Trucks	
Gender	F
Ethnicity	NATIVE AMERICAN
Firm Type	DBE

Firm ID	32928
Firm/DBA Name	ROSSI CONSTRUCTION COMPANY, INC.
Address Line1	15561 PRODUCER LANE
Address Line2	UNIT M
City	HUNTINGTON BEACH
State	CA

Zip Code1	92649
Zip Code2	
Mailing Address Line1	16033 BOLSA CHICA STREET
Mailing Address Line2	#104-635
Mailing City	HUNTINGTON BEACH
Mailing State	CA
Mailing Zip Code1	92649
Mailing Zip Code2	
Certification Type	DBE
EMail	
Contact Name	CAROL ROSSI CLARKE
Area Code	(714)
Phone Number	903-0401
Fax Area Code	(714)
Fax Phone Number	903-4411
Agency Name	CITY OF LOS ANGELES
Counties	00;
Districts	00;
DBE NAICS	237110;

ACDBE NAICS

Work Codes	C6800 SUBSURFACE DRAIN; C7112 REINFORCED CONCRETE SEWER PIPE;
Licenses	A General Engineering Contractor;
Trucks	
Gender	F
Ethnicity	CAUCASIAN
Firm Type	DBE

Firm ID	41661
Firm/DBA Name	RUBICON BUILDERS INC.
Address Line1	3450 THIRD STREET, BUILDING 1B
Address Line2	
City	SAN FRANCISCO
State	CA
Zip Code1	94124
Zip Code2	
Mailing Address Line1	
Mailing Address Line2	
Mailing City	
Mailing State	
Mailing Zip Code1	
Mailing Zip Code2	
Certification Type	DBE
EMail	ruben@rubecon.com or office@rubecon.com
Contact Name	RUBEN SANTANA
Area Code	(415)
Phone Number	206-7740
Fax Area Code	(415)
Fax Phone Number	206-1750
Agency Name	SAN FRANCISCO MUNICIPAL TRANSPORTATION AGENCY
Counties	01; 07; 10; 19; 21; 24; 27; 28; 30; 34; 38; 40; 41; 43; 44; 48; 49; 50;
Districts	03; 04; 05; 06; 07; 10; 12;
DBE NAICS	236210; 236220; 237310; 238110; 238130; 238210; 238310; 238350;

ACDBE NAICS

Work Codes	C5100 CONCRETE STRUCTURE; C8783 Engineering - Structural; C8903 ELECTRICAL; C9802 BUILDING CONSTRUCTION; C9822 CARPENTRY; C9827 DRYWALL CONSTRUCTION; D2430 MILLWORK;

	PLYWOOD & STRUCTURAL MEMBERS;
Licenses	A General Engineering Contractor; B General Building Contractor; C05 Framing and Rough Carpentry Contractor; C06 Cabinet, Millwork and Finish Carpentry Contractor; C08 Concrete Contractor; C09 Drywall Contractor; C10 Electrical Contractor;
Trucks	
Gender	M
Ethnicity	HISPANIC
Firm Type	DBE

Firm ID	20983
Firm/DBA Name	S C ENVIRONMENTAL, INC.
Address Line1	3637 HONEYGLEN WAY
Address Line2	
City	ONTARIO
State	CA
Zip Code1	91761
Zip Code2	
Mailing Address Line1	
Mailing Address Line2	
Mailing City	
Mailing State	
Mailing Zip Code1	
Mailing Zip Code2	
Certification Type	DBE
EMail	scenv@verizon.net
Contact Name	SERGIO CUEVAS
Area Code	(909)
Phone Number	947-4859
Fax Area Code	(909)
Fax Phone Number	947-6640
Agency Name	LOS ANGELES COUNTY METRO TRANSPORTATION AUTHORITY (MTA)
Counties	00;
Districts	00;
DBE NAICS	221310; 237990; 541620; 541690; 541990; 562211; 562910; 562998;
ACDBE NAICS	
Work Codes	C2065 IRRIGATION SYSTEM; C8700 CONSULTANT, NON ENGINEERING; C8770 CONSTRUCTION MANAGEMENT; E4940 WATER SUPPLY; J9510 ENVIRONMENTAL QUALITY;
Licenses	A General Engineering Contractor; C57 Well Drilling Contractor; HAZ Hazardous Waste;
Trucks	
Gender	M
Ethnicity	HISPANIC
Firm Type	DBE

Firm ID	37109
Firm/DBA Name	SAFEPROBE, INC.
Address Line1	3424 WILSHIRE BLVD., SUITE 1108
Address Line2	
City	LOS ANGELES
State	CA
Zip Code1	90010
Zip Code2	
Mailing Address Line1	
Mailing Address Line2	
Mailing City	
Mailing State	
Mailing Zip Code1	
Mailing Zip Code2	
Certification Type	DBE

EMail	efren_a@abratique.com
Contact Name	EFREN ABRATIQUE
Area Code	(213)
Phone Number	251-5960
Fax Area Code	(213)
Fax Phone Number	258-5966
Agency Name	LOS ANGELES COUNTY METRO TRANSPORTATION AUTHORITY (MTA)
Counties	00;
Districts	00;
DBE NAICS	238990; 541330;

ACDBE NAICS

Work Codes	C8710 ENGINEERING; C8720 CIVIL ENGINEERING;
Licenses	A General Engineering Contractor; EC Civil Engineer;
Trucks	
Gender	M
Ethnicity	ASIAN PACIFIC
Firm Type	DBE

Firm ID	1080
Firm/DBA Name	SAMROD CORPORATION
Address Line1	151 EAST AVE., H-8
Address Line2	
City	LANCASTER
State	CA
Zip Code1	93535
Zip Code2	
Mailing Address Line1	
Mailing Address Line2	
Mailing City	
Mailing State	
Mailing Zip Code1	
Mailing Zip Code2	
Certification Type	DBE
EMail	mrodriguez@samrodcorp.com
Contact Name	MICHAEL RODRIGUEZ
Area Code	(661)
Phone Number	945-3602
Fax Area Code	(661)
Fax Phone Number	949-8536
Agency Name	CITY OF LOS ANGELES
Counties	10; 14; 15; 19; 26; 33; 36; 42; 56;
Districts	05; 06; 07; 08; 09;
DBE NAICS	236220; 237310; 238110;

ACDBE NAICS

Work Codes	C1575 REMOVE BRIDGE ITEM; C1580 MODIFY BRIDGE ITEM; C2800 CONCRETE BASE; C9801 BUILDING CONSTRUCTION; C9846 ADDITIONS, ALTERATIONS OR REPAIRS;
Licenses	A General Engineering Contractor; C08 Concrete Contractor;
Trucks	
Gender	M
Ethnicity	HISPANIC
Firm Type	DBE

Firm ID	41565
Firm/DBA Name	SAN JOAQUIN VALLEY CONSTRUCTION GROUP, LLC
Address Line1	P.O. BOX 2506

Address Line2	
City	BAKERSFIELD
State	CA
Zip Code1	93303
Zip Code2	
Mailing Address Line1	
Mailing Address Line2	
Mailing City	
Mailing State	
Mailing Zip Code1	
Mailing Zip Code2	
Certification Type	DBE
EMail	marvindeanllc@sbglobal.net
Contact Name	MARVIN DEAN
Area Code	(661)
Phone Number	747-1465
Fax Area Code	(661)
Fax Phone Number	323-9287
Agency Name	CITY OF FRESNO
Counties	10; 15; 19; 20; 24; 34; 37; 39; 40; 43; 44; 50; 54; 56;
Districts	03; 04; 05; 06; 07; 10; 11;
DBE NAICS	237110; 237130; 238910; 238990; 541350; 541618; 541620; 541890; 561320; 561439; 561499; 561920; 561990; 562998; 611430;
ACDBE NAICS	
Work Codes	C1901 ROADWAY EXCAVATION; C7000 PLASTIC PIPE; C7140 CLAY SEWER PIPE; C7180 CAST IRON SEWER PIPE; C8700 CONSULTANT, NON ENGINEERING; C8701 BUSINESS ADMINISTRATION; C8712 PUBLIC RELATIONS; C8714 CONSULTANT, PROJECT MANAGEMENT/ BUSINESS ADMIN; C8731 Building Inspection Services; C8770 CONSTRUCTION MANAGEMENT; C8771 Construction Management - Commercial and Institutional Building Construction; C8772 Construction Management - Institutional Building Construction; C8773 Construction Management - Highway, Street and Bridge Construction; C8774 Construction Management - Land Subdivision; C8775 Construction Management - Oil and Gas Pipeline and Releted Structure Construction; C8776 Construction Management - Other Heavy and Civil Construction; C8777 Construction Management - Power and Communication Line and Related Structure Construction; C8778 Construction Management - Water and Sewer Line and Related Structure Construction; C8837 Citizen, Community Involvement; E4955 WASTE MANAGEMENT CONSULTING SERVICES; I8610 BUSINESS ASSOCIATIONS; I8640 CIVIC & SOCIAL ASSOCIATIONS; I8740 MANAGEMENT & PUBLIC RELATIONS;
Licenses	A General Engineering Contractor; B General Building Contractor; C21 Building Moving / Demolition Contractor; C31 Construction Zone Traffic Control Contractor; HAZ Hazardous Waste;
Trucks	
Gender	M
Ethnicity	BLACK
Firm Type	DBE

Firm ID	31006
Firm/DBA Name	SERNA CONSTRUCTION, INC.
Address Line1	5019 E NEVADA AVE
Address Line2	
City	FRESNO
State	CA
Zip Code1	93727
Zip Code2	
Mailing Address Line1	5019 E NEVADA AVE
Mailing Address Line2	
Mailing City	FRESNO
Mailing State	CA
Mailing Zip Code1	93727
Mailing Zip Code2	
Certification Type	DBE
EMail	semaconstruction@sbcglobal.net

Contact Name	ROBERT J. SERNA
Area Code	(559)
Phone Number	304-2197
Fax Area Code	(559)
Fax Phone Number	478-5213
Agency Name	CITY OF FRESNO
Counties	10; 15; 16; 20; 22; 24; 54;
Districts	06; 10;
DBE NAICS	237310; 238110; 238910; 238990;
ACDBE NAICS	
Work Codes	C1601 CLEARING & GRUBBING; C1901 ROADWAY EXCAVATION; C1910 GRADING; C1920 STRUCTURE EXCAVATION; C1925 SHAPED BEDDING; C1930 STRUCTURE BACKFILL; C1940 DITCHES EXCAVATION; C1970 EMBANKMENT CONSTRUCTION; C1980 IMPORTED BORROW; C3901 ASPHALT CONCRETE; C3910 PAVING ASPHALT (ASPHALT CONCRETE); C3930 PAVEMENT REINFORCING FABRIC; C3940 PLACE ASPHALT CONCRETE DIKE & MISC; C3990 RECYCLE, RECLAIM ASPHALT CONCRETE; C9980 DEMOLITION;
Licenses	A General Engineering Contractor; C08 Concrete Contractor; C12 Earthwork and Paving Contractor;
Trucks	
Gender	M
Ethnicity	HISPANIC
Firm Type	DBE

Firm ID	39590
Firm/DBA Name	SERNA ENGINEERING
Address Line1	15420 OLDE HWY. 80 #121
Address Line2	
City	EL CAJON
State	CA
Zip Code1	92021
Zip Code2	
Mailing Address Line1	
Mailing Address Line2	
Mailing City	
Mailing State	
Mailing Zip Code1	
Mailing Zip Code2	
Certification Type	DBE
EMail	h.redondo@yahoo.com
Contact Name	HENRY REDONDO
Area Code	(619)
Phone Number	749-7300
Fax Area Code	( )
Fax Phone Number	
Agency Name	DEPARTMENT OF TRANSPORTATION
Counties	10; 13; 15; 16; 19; 20; 21; 22; 24; 30; 33; 34; 36; 37; 38; 39; 40; 42; 45; 52; 54; 56; 57; 58;
Districts	02; 03; 04; 05; 06; 07; 08; 10; 11; 12;
DBE NAICS	237990; 238210;
ACDBE NAICS	
Work Codes	C9858 RESIDENTIAL ELECTRICAL;
Licenses	A General Engineering Contractor; B General Building Contractor; C10 Electrical Contractor;
Trucks	
Gender	M
Ethnicity	HISPANIC
Firm Type	DBE

Firm ID	32035
Firm/DBA Name	SIERRA COMMUNICATIONS & CONSTRUCTION, INC.
Address Line1	3006 TROWER RD
Address Line2	
City	CATHEYS VALLEY
State	CA
Zip Code1	95306
Zip Code2	
Mailing Address Line1	PO BOX 308
Mailing Address Line2	
Mailing City	CATHEYS VALLEY
Mailing State	CA
Mailing Zip Code1	95306
Mailing Zip Code2	
Certification Type	DBE
EMail	Tommy@SierraCCI.com
Contact Name	TOMMY BALL
Area Code	(209)
Phone Number	742-4948
Fax Area Code	(209)
Fax Phone Number	742-4948
Agency Name	DEPARTMENT OF TRANSPORTATION
Counties	02; 03; 04; 05; 06; 08; 09; 10; 11; 12; 14; 15; 16; 17; 18; 20; 22; 23; 24; 25; 26; 27; 29; 31; 32; 34; 35; 39; 43; 44; 45; 46; 47; 50; 51; 52; 53; 54; 55; 56; 57; 58;
Districts	01; 02; 03; 04; 05; 06; 07; 09; 10;
DBE NAICS	236220; 237110; 237310; 237990;
ACDBE NAICS	
Work Codes	C6200 ALTERNATIVE PIPE CULVERT; C9801 BUILDING CONSTRUCTION; C9872 SEWER CONNECTION; E4940 WATER SUPPLY; E4952 SEWERAGE SYSTEMS;
Licenses	A General Engineering Contractor;
Trucks	
Gender	M
Ethnicity	NATIVE AMERICAN
Firm Type	DBE

Firm ID	40582
Firm/DBA Name	SIERRA MOUNTAIN CONSTRUCTION INC
Address Line1	55 NEW MONTGOMERY STREET SUITE 304
Address Line2	
City	SAN FRANCISCO
State	CA
Zip Code1	94105
Zip Code2	
Mailing Address Line1	
Mailing Address Line2	
Mailing City	
Mailing State	
Mailing Zip Code1	
Mailing Zip Code2	
Certification Type	DBE
EMail	doug@sierramtn.net
Contact Name	DOUGLAS BENTON
Area Code	(415)
Phone Number	896-2859
Fax Area Code	(800)
Fax Phone Number	507-5295
Agency Name	SAN FRANCISCO MUNICIPAL TRANSPORTATION AGENCY
Counties	00;

Districts	00;
DBE NAICS	237110; 237990; 562112;

ACDBE NAICS

Work Codes	C8720 CIVIL ENGINEERING; C8778 Construction Management - Water and Sewer Line and Related Structure Construction;
Licenses	A General Engineering Contractor; B General Building Contractor; HAZ Hazardous Waste;
Trucks	
Gender	M
Ethnicity	HISPANIC
Firm Type	DBE

Firm ID	35994
Firm/DBA Name	SIERRA RANGE CONSTRUCTION
Address Line1	711 N. COURT STREET
Address Line2	P. O. BOX 427
City	VISALIA
State	CA
Zip Code1	93292
Zip Code2	
Mailing Address Line1	P. O. BOX 427
Mailing Address Line2	
Mailing City	VISALIA
Mailing State	CA
Mailing Zip Code1	93279
Mailing Zip Code2	
Certification Type	DBE
EMail	richiecarla@earthlink.net
Contact Name	RICHARD JONES
Area Code	(559)
Phone Number	635-0504
Fax Area Code	(559)
Fax Phone Number	635-0499
Agency Name	CITY OF FRESNO
Counties	10; 14; 15; 16; 20; 54;
Districts	06; 09;
DBE NAICS	238110; 238990; 541611; 541618;

ACDBE NAICS

Work Codes	C4010 PORTLAND CEMENT & CONCRETE PAVEMENT; C5100 CONCRETE STRUCTURE; C7301 CONCRETE CURB & SIDEWALK - MISC; C8770 CONSTRUCTION MANAGEMENT; C9903 CONSTRUCTION CLEAN UP; C9905 CUTTING;
Licenses	A General Engineering Contractor; B General Building Contractor; D63 Construction Cleanup;
Trucks	
Gender	M
Ethnicity	BLACK
Firm Type	DBE

Firm ID	9241
Firm/DBA Name	SITEWORKS CONSTRUCTION, INC
Address Line1	3634 BICKERSTAFF ST
Address Line2	
City	LAFAYETTE
State	CA
Zip Code1	94549
Zip Code2	
Mailing Address Line1	PO BOX 1324

Mailing Address Line2	
Mailing City	LAFAYETTE
Mailing State	CA
Mailing Zip Code1	94549
Mailing Zip Code2	
Certification Type	DBE
EMail	kdesena@linkzone.com
Contact Name	KENT DESENA
Area Code	(925)
Phone Number	284-1437
Fax Area Code	(925)
Fax Phone Number	256-8357
Agency Name	DEPARTMENT OF TRANSPORTATION
Counties	01; 06; 07; 09; 10; 15; 16; 17; 20; 21; 22; 23; 24; 27; 28; 29; 31; 34; 35; 38; 39; 40; 41; 43; 44; 45; 48; 49; 50; 51; 52; 53; 57; 58;
Districts	01; 02; 03; 04; 05; 06; 10;
DBE NAICS	237310; 238110; 238120; 238910; 238990;

ACDBE NAICS

Work Codes	C1601 CLEARING & GRUBBING; C1901 ROADWAY EXCAVATION; C1920 STRUCTURE EXCAVATION; C1930 STRUCTURE BACKFILL; C1940 DITCHES EXCAVATION; C5501 STEEL STRUCTURES; C5570 STEEL CRIB WALL; C9980 DEMOLITION;
Licenses	A General Engineering Contractor;
Trucks	
Gender	M
Ethnicity	ASIAN PACIFIC
Firm Type	DBE

Firm ID	7799
Firm/DBA Name	SJD CONSTRUCTION INC.
Address Line1	775 WAKEFIELD CT, STE B
Address Line2	
City	OAKDALE
State	CA
Zip Code1	95361
Zip Code2	1042
Mailing Address Line1	P.O.BOX 12320
Mailing Address Line2	
Mailing City	OAKDALE
Mailing State	CA
Mailing Zip Code1	95361
Mailing Zip Code2	1042
Certification Type	DBE
EMail	sjdconst@yahoo.com
Contact Name	SANDRA CUNNINGHAM
Area Code	(209)
Phone Number	847-8939
Fax Area Code	(209)
Fax Phone Number	847-0169
Agency Name	DEPARTMENT OF TRANSPORTATION
Counties	03; 04; 05; 06; 07; 09; 10; 20; 22; 24; 27; 28; 31; 34; 38; 39; 41; 48; 49; 50; 54; 55; 57; 58;
Districts	03; 04; 05; 06; 10;
DBE NAICS	237310; 238110; 238990;

ACDBE NAICS

Work Codes	C1200 CONSTRUCTION AREA SIGNS; C1201 TRAFFIC CONTROL SYSTEM; C1601 CLEARING & GRUBBING; C1901 ROADWAY EXCAVATION; C1920 STRUCTURE EXCAVATION; C1930 STRUCTURE BACKFILL; C1940 DITCHES EXCAVATION; C5100 CONCRETE STRUCTURE; C5501 STEEL

	STRUCTURES; C5570 STEEL CRIB WALL;
Licenses	A General Engineering Contractor;
Trucks	
Gender	F
Ethnicity	CAUCASIAN
Firm Type	DBE

Firm ID	33837
Firm/DBA Name	SOLID CONSTRUCTION, INC
Address Line1	3017 MILDRED LN
Address Line2	
City	BAKERSFIELD
State	CA
Zip Code1	93314
Zip Code2	
Mailing Address Line1	
Mailing Address Line2	
Mailing City	
Mailing State	
Mailing Zip Code1	
Mailing Zip Code2	
Certification Type	DBE
EMail	queenie_chief2003@yahoo.com
Contact Name	DAN RICH
Area Code	(661)
Phone Number	829-1637
Fax Area Code	(661)
Fax Phone Number	829-1637
Agency Name	DEPARTMENT OF TRANSPORTATION
Counties	10; 15; 16; 20; 24; 40; 42; 54;
Districts	05; 06; 10;
DBE NAICS	221310; 237110; 237990; 238910;

ACDBE NAICS

Work Codes	C1601 CLEARING & GRUBBING; C1910 GRADING; C1940 DITCHES EXCAVATION; C2065 IRRIGATION SYSTEM; C9872 SEWER CONNECTION;
Licenses	A General Engineering Contractor; C34 Pipeline Contractor;
Trucks	
Gender	M
Ethnicity	NATIVE AMERICAN
Firm Type	DBE

Firm ID	30528
Firm/DBA Name	SOUZA CONSTRUCTION INC
Address Line1	586 S. FARMERSVILLE BLVD.
Address Line2	
City	FARMERSVILLE
State	CA
Zip Code1	93223
Zip Code2	
Mailing Address Line1	P.O. BOX 2755
Mailing Address Line2	
Mailing City	VISALIA
Mailing State	CA
Mailing Zip Code1	93279
Mailing Zip Code2	
Certification Type	DBE
EMail	
Contact Name	MANUEL SOUZA

Area Code	(559)
Phone Number	747-7100
Fax Area Code	(559)
Fax Phone Number	747-7101
Agency Name	DEPARTMENT OF TRANSPORTATION
Counties	00;
Districts	00;
DBE NAICS	236210; 237310; 238210; 238390; 238910; 238990;

ACDBE NAICS

Work Codes	C1201 TRAFFIC CONTROL SYSTEM; C1601 CLEARING & GRUBBING; C1901 ROADWAY EXCAVATION; C1920 STRUCTURE EXCAVATION; C1930 STRUCTURE BACKFILL; C1940 DITCHES EXCAVATION; C9801 BUILDING CONSTRUCTION; C9810 SMALL STRUCTURES; C9822 CARPENTRY; C9827 DRYWALL CONSTRUCTION; C9829 RETAINER WALLS; C9868 INSULATION; C9874 HARDWARE (ROUGH); C9876 HARDWARE (FINISH); C9980 DEMOLITION;
Licenses	A General Engineering Contractor; B General Building Contractor; C10 Electrical Contractor;
Trucks	
Gender	M
Ethnicity	HISPANIC
Firm Type	DBE

Firm ID	39012
Firm/DBA Name	STARBURST ENGINEERING
Address Line1	2182 E. PENLAN AVENUE, SUITE A
Address Line2	
City	EXETER
State	CA
Zip Code1	93221
Zip Code2	
Mailing Address Line1	
Mailing Address Line2	
Mailing City	
Mailing State	
Mailing Zip Code1	
Mailing Zip Code2	
Certification Type	DBE
EMail	lauren@starbursteng.com
Contact Name	LAUREN SARIO
Area Code	(559)
Phone Number	802-8576
Fax Area Code	(559)
Fax Phone Number	592-2845
Agency Name	CITY OF FRESNO
Counties	10; 15; 16; 24; 40; 54;
Districts	05; 06; 10;
DBE NAICS	238990; 532299;

ACDBE NAICS

Work Codes	C0612 SAFETY SUPPLIER; I7350 MISC EQUIPMENT RENTAL & LEASING;
Licenses	A General Engineering Contractor; B General Building Contractor;
Trucks	
Gender	F
Ethnicity	CAUCASIAN
Firm Type	DBE

Firm ID	40887
Firm/DBA Name	STEVE DOVALI CONSTRUCTION, INC.

Address Line1	8461 E. OLIVE
Address Line2	
City	FRESNO
State	CA
Zip Code1	93727
Zip Code2	
Mailing Address Line1	
Mailing Address Line2	
Mailing City	
Mailing State	
Mailing Zip Code1	
Mailing Zip Code2	
Certification Type	DBE
EMail	dovaliconstruction@gmail.com
Contact Name	TIM DOVALI
Area Code	(559)
Phone Number	255-7603
Fax Area Code	(559)
Fax Phone Number	456-2843
Agency Name	CITY OF FRESNO
Counties	10; 15; 16; 20; 24; 39; 40; 54;
Districts	05; 06; 10;
DBE NAICS	237110; 237310; 237990; 238110;
ACDBE NAICS	
Work Codes	C1910 GRADING; C3901 ASPHALT CONCRETE; C5105 MINOR CONCRETE STRUCTURE; C7000 PLASTIC PIPE; C7140 CLAY SEWER PIPE; C7191 SEWER MANHOLE; C7301 CONCRETE CURB & SIDEWALK - MISC; C9801 BUILDING CONSTRUCTION; C9810 SMALL STRUCTURES; C9822 CARPENTRY;
Licenses	A General Engineering Contractor; B General Building Contractor; C21 Building Moving / Demolition Contractor;
Trucks	
Gender	M
Ethnicity	HISPANIC
Firm Type	DBE

Firm ID	37627
Firm/DBA Name	SUAREZ & MUNOZ CONSTRUCTION, INC.
Address Line1	20975 CABOT BLVD.
Address Line2	
City	HAYWARD
State	CA
Zip Code1	94545
Zip Code2	1155
Mailing Address Line1	
Mailing Address Line2	
Mailing City	
Mailing State	
Mailing Zip Code1	
Mailing Zip Code2	
Certification Type	DBE
EMail	john@suarezmunoz.com
Contact Name	EDUARDO SUAREZ
Area Code	(510)
Phone Number	782-6065
Fax Area Code	(510)
Fax Phone Number	782-6078
Agency Name	BAY AREA RAPID TRANSIT DISTRICT (BART)
Counties	01; 07; 10; 21; 27; 28; 34; 38; 41; 43; 48; 49;

Districts	03; 04; 05; 06;
DBE NAICS	237310; 237990; 238190; 238910; 238990;
ACDBE NAICS	
Work Codes	C7301 CONCRETE CURB & SIDEWALK - MISC;
Licenses	A General Engineering Contractor; B General Building Contractor; C08 Concrete Contractor; C27 Landscaping Contractor;
Trucks	
Gender	M
Ethnicity	HISPANIC
Firm Type	DBE

Firm ID	40764
Firm/DBA Name	SUULUTAAQ, INC - ALASKA NATIVE CORP
Address Line1	827 MISSOURI STREET, SUITE 6
Address Line2	
City	FAIRFIELD
State	CA
Zip Code1	94533
Zip Code2	
Mailing Address Line1	4300 B STREET, SUITE
Mailing Address Line2	
Mailing City	ANCHORAGE
Mailing State	AK
Mailing Zip Code1	99503
Mailing Zip Code2	
Certification Type	DBE
EMail	ninah.moody@suulutaaq.com
Contact Name	TRACY CRAIN
Area Code	(707)
Phone Number	427-3209
Fax Area Code	(707)
Fax Phone Number	635-8187
Agency Name	DEPARTMENT OF TRANSPORTATION
Counties	01; 02; 03; 04; 05; 06; 07; 08; 09; 10; 11; 12; 13; 14; 15; 16; 17; 18; 19; 20; 21; 22; 23; 24; 25; 26; 27; 28; 29; 30; 31; 32; 33; 34; 35; 36; 37; 38; 39; 40; 41; 42; 43; 44; 45; 46; 47; 48; 49; 50; 51; 52; 53; 54; 55; 56; 57; 58;
Districts	01; 02; 03; 04; 05; 06; 07; 08; 09; 10; 11; 12;
DBE NAICS	236220; 237310; 237990; 238910; 561210;
ACDBE NAICS	
Work Codes	C1901 ROADWAY EXCAVATION; C1970 EMBANKMENT CONSTRUCTION; C3910 PAVING ASPHALT (ASPHALT CONCRETE); C9801 BUILDING CONSTRUCTION; I7360 PERSONNEL SUPPLY SERVICES;
Licenses	A General Engineering Contractor; B General Building Contractor;
Trucks	
Gender	M
Ethnicity	NATIVE AMERICAN
Firm Type	DBE

Firm ID	40261
Firm/DBA Name	TAYLOR DRILLING
Address Line1	254 NORD AVE
Address Line2	
City	BAKERSFIELD
State	CA
Zip Code1	93314
Zip Code2	

Mailing Address Line1	
Mailing Address Line2	
Mailing City	
Mailing State	
Mailing Zip Code1	
Mailing Zip Code2	
Certification Type	DBE
EMail	jtaylor514@earthlink.net
Contact Name	JODY TAYLOR
Area Code	(661)
Phone Number	979-5537
Fax Area Code	(661)
Fax Phone Number	588-3964
Agency Name	CITY OF FRESNO
Counties	10; 15;
Districts	06;
DBE NAICS	237130;
ACDBE NAICS	
Work Codes	C7000 PLASTIC PIPE;
Licenses	A General Engineering Contractor;
Trucks	
Gender	F
Ethnicity	CAUCASIAN
Firm Type	DBE

Firm ID	31859
Firm/DBA Name	TEC MANAGEMENT CONSULTANTS INC
Address Line1	510 S LA BREA AVENUE
Address Line2	
City	INGLEWOOD
State	CA
Zip Code1	90301
Zip Code2	
Mailing Address Line1	
Mailing Address Line2	
Mailing City	
Mailing State	
Mailing Zip Code1	
Mailing Zip Code2	
Certification Type	DBE
EMail	tcoffey@teccm.com
Contact Name	TIMOTHY COFFEY
Area Code	(800)
Phone Number	509-1542
Fax Area Code	(800)
Fax Phone Number	601-1647
Agency Name	DEPARTMENT OF TRANSPORTATION
Counties	00;
Districts	00;
DBE NAICS	236210; 236220; 237310; 237990; 238110; 238990; 541611; 541618; 541990; 562112;
ACDBE NAICS	
Work Codes	C8700 CONSULTANT, NON ENGINEERING; C8701 BUSINESS ADMINISTRATION; C8702 MANAGEMENT INFORMATION SYSTEMS; I8740 MANAGEMENT & PUBLIC RELATIONS;
Licenses	A General Engineering Contractor; B General Building Contractor; C08 Concrete Contractor; C09 Drywall Contractor; C54 Tile Contractor (Ceramic and Mosaic); HAZ Hazardous Waste;

Trucks	
Gender	M
Ethnicity	BLACK
Firm Type	DBE

Firm ID	36594
Firm/DBA Name	THE LANGE GROUP, INC.
Address Line1	600 S. SPRING ST., #1006
Address Line2	
City	LOS ANGELES
State	CA
Zip Code1	90014
Zip Code2	
Mailing Address Line1	
Mailing Address Line2	
Mailing City	
Mailing State	
Mailing Zip Code1	
Mailing Zip Code2	
Certification Type	DBE
EMail	angel@thelangegroupinc.com
Contact Name	ANGEL ORTIZ
Area Code	(213)
Phone Number	228-8920
Fax Area Code	(323)
Fax Phone Number	276-7810
Agency Name	CITY OF LOS ANGELES
Counties	00;
Districts	00;
DBE NAICS	236210; 236220; 541618; 562910;
ACDBE NAICS	
Work Codes	C8770 CONSTRUCTION MANAGEMENT; C9801 BUILDING CONSTRUCTION; C9903 CONSTRUCTION CLEAN UP;
Licenses	A General Engineering Contractor; B General Building Contractor;
Trucks	
Gender	M
Ethnicity	HISPANIC
Firm Type	DBE

Firm ID	24374
Firm/DBA Name	TNT INDUSTRIAL CONTRACTORS, INC
Address Line1	3600 51ST AVENUE
Address Line2	
City	SACRAMENTO
State	CA
Zip Code1	95823
Zip Code2	
Mailing Address Line1	
Mailing Address Line2	
Mailing City	
Mailing State	
Mailing Zip Code1	
Mailing Zip Code2	
Certification Type	DBE
EMail	paula@tntindustrial.com
Contact Name	RANDY TWIST
Area Code	(916)
Phone Number	395-8400

Fax Area Code	(916)
Fax Phone Number	395-8429
Agency Name	DEPARTMENT OF TRANSPORTATION
Counties	01; 02; 03; 04; 05; 06; 07; 08; 09; 10; 11; 12; 13; 14; 15; 16; 17; 18; 19; 20; 21; 22; 23; 24; 25; 26; 27; 28; 29; 30; 31; 32; 33; 34; 35; 36; 37; 38; 39; 40; 41; 42; 43; 44; 45; 46; 47; 48; 49; 50; 51; 52; 53; 54; 55; 56; 57; 58;
Districts	01; 02; 03; 04; 05; 06; 07; 08; 09; 10; 11; 12;
DBE NAICS	236210; 238110; 238130; 238190; 238220; 238910;

ACDBE NAICS

Work Codes	C8770 CONSTRUCTION MANAGEMENT; C9801 BUILDING CONSTRUCTION; C9822 CARPENTRY; C9850 PLUMBING; C9866 HEATING & AIR CONDITIONING;
Licenses	A General Engineering Contractor; B General Building Contractor; C20 Warm-Air Heating, Ventilation and Air-conditioning Contracto; C36 Plumbing Contractor;
Trucks	
Gender	M
Ethnicity	NATIVE AMERICAN
Firm Type	DBE

Firm ID	35265
Firm/DBA Name	TOM'S METAL SPECIALISTS, INC.
Address Line1	894 ROLPH STREET
Address Line2	
City	SAN FRANCISCO
State	CA
Zip Code1	94112
Zip Code2	
Mailing Address Line1	
Mailing Address Line2	
Mailing City	
Mailing State	
Mailing Zip Code1	
Mailing Zip Code2	
Certification Type	DBE
EMail	tom@tomsmetal.com
Contact Name	TOM CHANG
Area Code	(415)
Phone Number	822-7971
Fax Area Code	(415)
Fax Phone Number	822-7991
Agency Name	SAN FRANCISCO MUNICIPAL TRANSPORTATION AGENCY
Counties	00;
Districts	00;
DBE NAICS	237990; 238120; 238390; 332323;

ACDBE NAICS

Work Codes	C8710 ENGINEERING; C8746 STRUCTURAL ENGINEER; C9802 BUILDING CONSTRUCTION;
Licenses	A General Engineering Contractor; B General Building Contractor; C51 Structural Steel Contractor; C60 Welding Contractor;
Trucks	
Gender	M
Ethnicity	ASIAN PACIFIC
Firm Type	DBE

Firm ID	32969
Firm/DBA Name	TOWNSEND MANAGEMENT INC
Address Line1	P.O. BOX 24442

Address Line2	
City	SAN FRANCISCO
State	CA
Zip Code1	94124
Zip Code2	
Mailing Address Line1	2945 3RD STREET
Mailing Address Line2	
Mailing City	SAN FRANCISCO
Mailing State	CA
Mailing Zip Code1	94107
Mailing Zip Code2	
Certification Type	DBE
EMail	zamir_zuraek@tmi-cm.com
Contact Name	ZAMIR ZURAEK
Area Code	(415)
Phone Number	285-9009
Fax Area Code	(415)
Fax Phone Number	285-9011
Agency Name	SAN FRANCISCO MUNICIPAL TRANSPORTATION AGENCY
Counties	00;
Districts	00;
DBE NAICS	236117; 236210; 238990; 541618;

ACDBE NAICS

Work Codes	C8714 CONSULTANT, PROJECT MANAGEMENT/ BUSINESS ADMIN; C8770 CONSTRUCTION MANAGEMENT; C8776 Construction Management - Other Heavy and Civil Construction;
Licenses	A General Engineering Contractor; B General Building Contractor;
Trucks	
Gender	M
Ethnicity	ASIAN PACIFIC
Firm Type	DBE

Firm ID	40470
Firm/DBA Name	TRIANGLE D ENTERPRISES, INC. DBA ODYSSEY ENGINEERING AND EXP
Address Line1	438 E. SHAW AVE
Address Line2	
City	FRESNO
State	CA
Zip Code1	93710
Zip Code2	7602
Mailing Address Line1	
Mailing Address Line2	
Mailing City	
Mailing State	
Mailing Zip Code1	
Mailing Zip Code2	
Certification Type	DBE
EMail	odysseyblasting@yahoo.com
Contact Name	CODY LOFTIS
Area Code	(559)
Phone Number	674-4608
Fax Area Code	( )
Fax Phone Number	
Agency Name	CITY OF FRESNO
Counties	04; 10; 14; 15; 16; 20; 22; 24; 26; 31; 34; 44; 45; 46; 49; 53; 54; 55;
Districts	02; 03; 04; 05; 06; 09; 10;
DBE NAICS	237310; 237990; 238910; 238990;

ACDBE NAICS

Work Codes	C1901 ROADWAY EXCAVATION;
Licenses	A General Engineering Contractor; C57 Well Drilling Contractor;
Trucks	
Gender	F
Ethnicity	CAUCASIAN
Firm Type	DBE

Firm ID	33824
Firm/DBA Name	UNITED TRAFFIC SERVICES & SUPPLY, INC.
Address Line1	14000 E. VALLEY BLVD.
Address Line2	
City	CITY OF INDUSTRY
State	CA
Zip Code1	91746
Zip Code2	
Mailing Address Line1	
Mailing Address Line2	
Mailing City	
Mailing State	
Mailing Zip Code1	
Mailing Zip Code2	
Certification Type	DBE
EMail	dora@unitedtraffic.net
Contact Name	DORA PINA
Area Code	(626)
Phone Number	961-5736
Fax Area Code	(818)
Fax Phone Number	961-4746
Agency Name	LOS ANGELES COUNTY METRO TRANSPORTATION AUTHORITY (MTA)
Counties	07; 10; 13; 19; 21; 27; 28; 30; 31; 33; 34; 36; 37; 39; 40; 41; 42; 43; 44; 48; 54; 56;
Districts	03; 04; 05; 06; 07; 08; 10; 11; 12;
DBE NAICS	238910; 238990; 339950;

ACDBE NAICS

Work Codes	C1601 CLEARING & GRUBBING; C5601 SIGN STRUCTURE; C9980 DEMOLITION;
Licenses	A General Engineering Contractor;
Trucks	
Gender	F
Ethnicity	HISPANIC
Firm Type	DBE

Firm ID	38151
Firm/DBA Name	V & G BUILDERS
Address Line1	4350 N. PALM
Address Line2	
City	FRESNO
State	CA
Zip Code1	93704
Zip Code2	
Mailing Address Line1	4350 N. PALM
Mailing Address Line2	
Mailing City	FRESNO
Mailing State	CA
Mailing Zip Code1	93704
Mailing Zip Code2	
Certification Type	DBE

EMail	jtonyvaldez@hotmail.com
Contact Name	JERONIMO ANTONIO VALDEZ
Area Code	(559)
Phone Number	805-9015
Fax Area Code	( )
Fax Phone Number	
Agency Name	CITY OF FRESNO
Counties	10; 15; 16; 20; 22; 24; 39; 50; 54;
Districts	06; 10;
DBE NAICS	237310; 238110;

ACDBE NAICS

Work Codes	C1522 RESET, ADJUST ROADWAY ITEMS; C1575 REMOVE BRIDGE ITEM; C1580 MODIFY BRIDGE ITEM;
Licenses	A General Engineering Contractor; B General Building Contractor; C08 Concrete Contractor;
Trucks	
Gender	M
Ethnicity	HISPANIC
Firm Type	DBE

Firm ID	39166
Firm/DBA Name	V A P CONSTRUCTION INC
Address Line1	16425 ILLUSION WAY
Address Line2	
City	LA MIRADA
State	CA
Zip Code1	90638
Zip Code2	
Mailing Address Line1	
Mailing Address Line2	
Mailing City	
Mailing State	
Mailing Zip Code1	
Mailing Zip Code2	
Certification Type	DBE
EMail	vapconstructioninc@gmail.com
Contact Name	ARVIND PRASAD
Area Code	(714)
Phone Number	253-3270
Fax Area Code	(714)
Fax Phone Number	551-9420
Agency Name	DEPARTMENT OF TRANSPORTATION
Counties	01; 02; 03; 04; 05; 06; 07; 08; 09; 10; 11; 13; 14; 15; 16; 17; 18; 19; 20; 21; 22; 23; 24; 25; 26; 27; 28; 29; 30; 31; 32; 33; 34; 35; 36; 37; 38; 39; 40; 41; 42; 43; 44; 45; 46; 47; 48; 49; 50; 51; 52; 53; 54; 55; 56; 57; 58;
Districts	01; 02; 03; 04; 05; 06; 07; 08; 09; 10; 11; 12;
DBE NAICS	237110; 237310; 237990; 238110;

ACDBE NAICS

Work Codes	C1200 CONSTRUCTION AREA SIGNS; C1201 TRAFFIC CONTROL SYSTEM; C1531 PLANE ASPHALT CONCRETE; C1601 CLEARING & GRUBBING; C1701 DEVELOP WATER SUPPLY; C1901 ROADWAY EXCAVATION; C2065 IRRIGATION SYSTEM; C3901 ASPHALT CONCRETE; C3910 PAVING ASPHALT (ASPHALT CONCRETE); C5105 MINOR CONCRETE STRUCTURE; C6200 ALTERNATIVE PIPE CULVERT; C7301 CONCRETE CURB & SIDEWALK - MISC; C8000 FENCING CONTRACTOR; C8331 CONCRETE BARRIER;
Licenses	A General Engineering Contractor;
Trucks	
Gender	M
Ethnicity	ASIAN SUBCONTINENT

Firm Type	DBE

Firm ID	1045
Firm/DBA Name	VALVERDE CONSTRUCTION, INC
Address Line1	10918 SHOEMAKER AVE
Address Line2	
City	SANTA FE SPRINGS
State	CA
Zip Code1	90670
Zip Code2	
Mailing Address Line1	P.O. BOX 3223
Mailing Address Line2	
Mailing City	SANTA FE SPRINGS
Mailing State	CA
Mailing Zip Code1	90670
Mailing Zip Code2	
Certification Type	DBE
EMail	joev@valverdeconst.com
Contact Name	JOE A. VALVERDE
Area Code	(562)
Phone Number	906-1826
Fax Area Code	(562)
Fax Phone Number	906-1918
Agency Name	DEPARTMENT OF TRANSPORTATION
Counties	00;
Districts	00;
DBE NAICS	237110;
ACDBE NAICS	
Work Codes	C1601 CLEARING & GRUBBING; C1901 ROADWAY EXCAVATION; C1920 STRUCTURE EXCAVATION; C1930 STRUCTURE BACKFILL; C1940 DITCHES EXCAVATION; C7160 ASBESTOS-CEMENT SEWER PIPE; C9980 DEMOLITION;
Licenses	A General Engineering Contractor; B General Building Contractor; C10 Electrical Contractor; C16 Fire Protection Contractor; C36 Plumbing Contractor;
Trucks	
Gender	M
Ethnicity	HISPANIC
Firm Type	DBE

Firm ID	40256
Firm/DBA Name	VELIS ENGINEERING, INC
Address Line1	1929 INDUSTRIAL WAY
Address Line2	
City	SANGER
State	CA
Zip Code1	93657
Zip Code2	
Mailing Address Line1	
Mailing Address Line2	
Mailing City	
Mailing State	
Mailing Zip Code1	
Mailing Zip Code2	
Certification Type	DBE
EMail	cbenites@verizon.net
Contact Name	CYNTHIA BENITES
Area Code	(559)
Phone Number	876-0029
Fax Area Code	(559)

Fax Phone Number	876-3300
Agency Name	CITY OF FRESNO
Counties	10; 15; 16; 20; 22; 24; 50; 54;
Districts	06; 10;
DBE NAICS	237110; 237310;

ACDBE NAICS

Work Codes	C1901 ROADWAY EXCAVATION; C1910 GRADING; C1930 STRUCTURE BACKFILL; C1940 DITCHES EXCAVATION; C7000 PLASTIC PIPE; C7112 REINFORCED CONCRETE SEWER PIPE; C7180 CAST IRON SEWER PIPE;
Licenses	A General Engineering Contractor;
Trucks	
Gender	F
Ethnicity	HISPANIC
Firm Type	DBE

Firm ID	27011
Firm/DBA Name	VINTAGE PAVING COMPANY, INC.
Address Line1	119 MAIN STREET
Address Line2	
City	WINTERS
State	CA
Zip Code1	95694
Zip Code2	
Mailing Address Line1	P O BOX 461
Mailing Address Line2	
Mailing City	WINTERS
Mailing State	CA
Mailing Zip Code1	95694
Mailing Zip Code2	
Certification Type	DBE
EMail	edc@vintagepavingco.com
Contact Name	EDWARD CARBAHAL
Area Code	(530)
Phone Number	795-0132
Fax Area Code	(530)
Fax Phone Number	795-5734
Agency Name	DEPARTMENT OF TRANSPORTATION
Counties	01; 02; 03; 04; 05; 06; 07; 09; 10; 11; 17; 21; 24; 28; 29; 31; 32; 34; 39; 45; 46; 48; 49; 50; 51; 52; 57; 58;
Districts	01; 02; 03; 04; 06; 10;
DBE NAICS	237310;

ACDBE NAICS

Work Codes	C1601 CLEARING & GRUBBING; C1901 ROADWAY EXCAVATION; C1910 GRADING; C1920 STRUCTURE EXCAVATION; C1930 STRUCTURE BACKFILL; C1940 DITCHES EXCAVATION; C9980 DEMOLITION;
Licenses	A General Engineering Contractor;
Trucks	
Gender	M
Ethnicity	HISPANIC
Firm Type	DBE

Firm ID	37542
Firm/DBA Name	VORTEX CONSTRUCTION
Address Line1	320 BUTTE ST
Address Line2	
City	BAKERSFIELD
State	CA

Zip Code1	93305
Zip Code2	
Mailing Address Line1	
Mailing Address Line2	
Mailing City	
Mailing State	
Mailing Zip Code1	
Mailing Zip Code2	
Certification Type	DBE
EMail	bill@vortex-usa.com
Contact Name	WILLIAM HARVEY WAGES
Area Code	(661)
Phone Number	324-5846
Fax Area Code	(661)
Fax Phone Number	324-5864
Agency Name	DEPARTMENT OF TRANSPORTATION
Counties	10; 13; 14; 15; 16; 19; 20; 24; 33; 37; 40; 42; 54; 56;
Districts	05; 06; 07; 08; 09; 10; 11;
DBE NAICS	236220; 238990;
ACDBE NAICS	
Work Codes	C9801 BUILDING CONSTRUCTION; C9827 DRYWALL CONSTRUCTION; C9837 ROOFING; C9866 HEATING & AIR CONDITIONING; C9980 DEMOLITION; C9981 BUILDING MOVER;
Licenses	A General Engineering Contractor; B General Building Contractor; C08 Concrete Contractor; C20 Warm-Air Heating, Ventilation and Air-conditioning Contracto; C21 Building Moving / Demolition Contractor; C39 Roofing Contractor; C47 General Manufactured Housing Contractor;
Trucks	
Gender	M
Ethnicity	NATIVE AMERICAN
Firm Type	DBE

Firm ID	41176
Firm/DBA Name	WALLACE STRUCTURES
Address Line1	2515 TAWNDALE LN
Address Line2	
City	HYDESVILLE
State	CA
Zip Code1	95547
Zip Code2	
Mailing Address Line1	PO BOX 629
Mailing Address Line2	
Mailing City	FORTUNA
Mailing State	CA
Mailing Zip Code1	95540
Mailing Zip Code2	
Certification Type	DBE
EMail	wallacestr@aol.com
Contact Name	ERIC WALLACE
Area Code	(707)
Phone Number	834-4992
Fax Area Code	(707)
Fax Phone Number	768-3386
Agency Name	DEPARTMENT OF TRANSPORTATION
Counties	01; 02; 03; 04; 05; 06; 07; 08; 09; 10; 11; 12; 13; 14; 15; 16; 17; 18; 19; 20; 21; 22; 23; 24; 25; 26; 27; 28; 29; 30; 31; 32; 33; 34; 35; 36; 37; 38; 39; 40; 41; 42; 43; 44; 45; 46; 47; 48; 49; 50; 51; 52; 53; 54; 55; 56; 57; 58;
Districts	01; 02; 03; 04; 05; 06; 07; 08; 09; 10; 11; 12;
DBE NAICS	237110; 237310; 237990; 238910;

ACDBE NAICS

Work Codes	C1920 STRUCTURE EXCAVATION; C1930 STRUCTURE BACKFILL; C1940 DITCHES EXCAVATION; C8770 CONSTRUCTION MANAGEMENT; C8773 Construction Management - Highway, Street and Bridge Construction; C8776 Construction Management - Other Heavy and Civil Construction;
Licenses	A General Engineering Contractor; B General Building Contractor;
Trucks	
Gender	M
Ethnicity	HISPANIC
Firm Type	DBE

Firm ID	14753
Firm/DBA Name	WESTPOWER, INC
Address Line1	3055 ALVARADO ST, SUITE 117
Address Line2	
City	SAN LEANDRO
State	CA
Zip Code1	94577
Zip Code2	
Mailing Address Line1	3055 ALVARADO ST.
Mailing Address Line2	
Mailing City	SAN LEANDRO
Mailing State	CA
Mailing Zip Code1	94577
Mailing Zip Code2	
Certification Type	DBE
EMail	alex@westpower.com
Contact Name	ALEX TAKAHASHI
Area Code	(510)
Phone Number	848-0505
Fax Area Code	(510)
Fax Phone Number	848-0504
Agency Name	DEPARTMENT OF TRANSPORTATION
Counties	01; 03; 06; 07; 09; 10; 18; 19; 20; 21; 22; 23; 24; 27; 28; 29; 30; 31; 32; 33; 34; 36; 37; 38; 39; 42; 43; 44; 48; 49; 50; 51; 54; 55; 56; 57; 58;
Districts	01; 02; 03; 04; 05; 06; 07; 08; 10; 11; 12;
DBE NAICS	221119; 238210; 541490;

ACDBE NAICS

Work Codes	C8715 CONSULTANT, ENGINEERING; C9858 RESIDENTIAL ELECTRICAL; E4910 ELECTRIC SERVICES; E4930 COMBINATION UTILITY SERVICES;
Licenses	A General Engineering Contractor; C07 Low Voltage Systems Contractor; C10 Electrical Contractor; EE Electrical Engineer ; HAZ Hazardous Waste;
Trucks	
Gender	M
Ethnicity	ASIAN PACIFIC
Firm Type	DBE

Firm ID	32821
Firm/DBA Name	WHO BUILT CREATIVE BUILDERS
Address Line1	80 ALTA DRIVE
Address Line2	
City	PETALUMA
State	CA
Zip Code1	94954
Zip Code2	
Mailing Address Line1	P.O. BOX 5207
Mailing Address Line2	
Mailing City	PETALUMA

Mailing State	CA
Mailing Zip Code1	94955
Mailing Zip Code2	
Certification Type	DBE
EMail	jana@whobuilt.biz
Contact Name	null JANA M GEBHARDT
Area Code	(707)
Phone Number	763-6210
Fax Area Code	(707)
Fax Phone Number	658-2513
Agency Name	DEPARTMENT OF TRANSPORTATION
Counties	01; 07; 10; 21; 28; 34; 38; 41; 43; 48; 49;
Districts	03; 04; 06;
DBE NAICS	238990;

ACDBE NAICS

Work Codes	C9810 SMALL STRUCTURES; C9822 CARPENTRY; C9874 HARDWARE (ROUGH); C9876 HARDWARE (FINISH);
Licenses	A General Engineering Contractor;
Trucks	
Gender	F
Ethnicity	CAUCASIAN
Firm Type	DBE

Firm ID	33490
Firm/DBA Name	YERBA BUENA ENGINEERING & CONSTRUCTION
Address Line1	1340 EGBERT AVENUE
Address Line2	
City	SAN FRANCISCO
State	CA
Zip Code1	94124
Zip Code2	
Mailing Address Line1	
Mailing Address Line2	
Mailing City	
Mailing State	
Mailing Zip Code1	
Mailing Zip Code2	
Certification Type	DBE
EMail	mgalarza@yerba-buena.net
Contact Name	MIGUEL GALARZA
Area Code	(415)
Phone Number	822-4400
Fax Area Code	(415)
Fax Phone Number	822-0900
Agency Name	SAN FRANCISCO MUNICIPAL TRANSPORTATION AGENCY
Counties	00;
Districts	00;
DBE NAICS	236210; 236220;

ACDBE NAICS

Work Codes	C8710 ENGINEERING; C9801 BUILDING CONSTRUCTION;
Licenses	A General Engineering Contractor; ASB Asbestos; B General Building Contractor; HAZ Hazardous Waste;
Trucks	
Gender	M
Ethnicity	HISPANIC
	DBE

Back To Query Form

2

TRADE PAPER ADVERTISEMENTS

W/M/S/DVBE CONTRACT & CONSTRUCTION NEWS

"A Statewide Publication for the State of California"

The Voice of the Minority, Women, Disadvantaged, Small Business and Disabled Veteran Contractors and other Business Enterprises.

P.O. Box 892135, Temecula, CA 92589 (800) 570-7070 Fax (800) 548-4237

Official Proof of Publication

(COPY OF ADVERTISEMENT)

Requesting Sub Bids from Qualified OBE/DBE/UDBE/M/W/S/DVBE Subcontractors and Suppliers For The Following Project:

CONSTRUCTION ON STATE HIGHWAY IN FRESNO COUNTY AT VARIOUS LOCATIONS - IN DISTRICT 06 ON ROUTE 41, 180 (VARIOUS) - CALTRANS CONTRACT NO. 06-0M8204
Contracting Agency: Caltrans
Bid Date/Time: August 6th, 2014 @ 2:00 PM
***DBE Contract Goal For This Project is 14%**
Seeking: All Trades

EMMETT'S EXCAVATION, INC.

6207 E. Clinton Avenue, Fresno, CA 93727
Phone: (559) 347-9188 Fax: (559) 348-9272
Contact: Kellie Reid

Payment and Performance Bonds may be required. We will assist with Bonds/ Insurance/Credit. Plans are available in our office. We are an E.O.E. & seriously intend to negotiate with qualified OBE/DBE/UDBE/M/W/S/DVBE firms.

The Date(s) of Publication

Tuesday, July 1st, 2014 and Tuesday, July 8th, 2014

I certify (declare) under penalty of perjury that the foregoing is true and correct. The above advertisement was published statewide in W/M/S/DVBE CONTRACT & CONSTRUCTION NEWS

T Gieseman, Editor
W/M/S/DVBE CONTRACT & CONSTRUCTION NEWS

the *THOMAS* BID REGISTER

A BI-WEEKLY TRADE PUBLICATION

P.O. Box 892135, Temecula, CA 92589 (800) 570-7070 Fax (800) 548-4237

Official Proof of Publication

(COPY OF ADVERTISEMENT)

Requesting Sub Bids from Qualified OBE/DBE/UDBE/M/W/S/DVBE Subcontractors and Suppliers For The Following Project:

CONSTRUCTION ON STATE HIGHWAY IN FRESNO COUNTY AT VARIOUS LOCATIONS - IN DISTRICT 06 ON ROUTE 41, 180 (VARIOUS) - CALTRANS CONTRACT NO. 06-0M8204
Contracting Agency: Caltrans
Bid Date/Time: August 6th, 2014 @ 2:00 PM
***DBE Contract Goal For This Project is 14%**
Seeking: All Trades

EMMETT'S EXCAVATION, INC.

6207 E. Clinton Avenue, Fresno, CA 93727
Phone: (559) 347-9188 Fax: (559) 348-9272
Contact: Kellie Reid

Payment and Performance Bonds may be required. We will assist with Bonds/ Insurance/Credit. Plans are available in our office. We are an E.O.E. & seriously intend to negotiate with qualified OBE/DBE/UDBE/M/W/S/DVBE firms.

The Date(s) of Publication

Tuesday, July 1st, 2014 and Tuesday, July 8th, 2014

I certify (declare) under penalty of perjury that the foregoing is true and correct.
The above advertisement was published statewide in the *THOMAS* BID REGISTER.

T Gieseman, Editor
the THOMAS BID REGISTER

"W/M/S/DVBE CONTRACT & CONSTRUCTION NEWS" A STATEWIDE **FOCUS** PUBLICATION	the **THOMAS** **BID REGISTER** A STATEWIDE **TRADE** PUBLICATION

GOOD FAITH EFFORT ADVERTISING ORDER FORM

(Both are Published **Tuesday & Friday** - *Deadline is 5:00 P. M. the day before Publication Date)*

Proof of Publications Will Be Faxed the next business day after Publication Oate

✓ **BOTH** PUBLICATIONS (Focus and Trade) AO RUN OATE(S)_____

_____ W/M/S/OVBE CONTRACT & CONSTRUCTION NEWS (Focus Only)

✓ the THOMAS BIO REGISTER (Trade Only)

✓ AO SIZE ***(Please Specify One of the following:*** (1/8), 1/6, 1/4, 1/3, 1/2, 2/3, 3/4, Full Page)

OUR ADVERTISING TRADE RATES ARE AS FOLLOWS:

1/8 Page Ad (1 Project)	Focus or Trade are $30.00 each	**Both** for only $22.50 each Publication
1/6 Page Ad (1-2 Projects)	Focus or Trade are $40.00 each	**Both** for only $29.00 each Publication
1/4 Page Ad (1-4 Projects)	Focus or Trade are $50.00 each	**Both** for only $39.00 each Publication
1/3 Page Ad (1-7 Projects)	Focus or Trade are $70.00 each	**Both** for only $54.00 each Publication
1/2 Page Ad (1-11 Projects)	Focus or Trade are $85.00 each	**Both** for only $69.00 each Publication
2/3 Page Ad	Focus or Trade are $100.00 each	**Both** for only $84.00 each Publication
3/4 Page Ad	Focus or Trade are $125.00 each	**Both** for only $104.00 each Publication
1 Full Page Ad	Focus or Trade are $150.00 each	**Both** for only $129.00 each Publication

TEXT TO APPEAR IN ADVERTISEMENT:

REQUESTING SUB BIOS FROM QUALIFIEO OBE, UOBE ANO M/W/S/OVBE SUBCONTRACTORS ANO SUPPLIERS FOR:

COMPANY NAME: **EMMETT'S EXCAVATION, INC.**

ADDRESS: **6207 E. CLINTON AVENUE**

CITY: **FRESNO** STATE: **CA** ZIP: **93727**

PHONE: **559-347-9188** FAX: **559-348-9272** CONTACT: Kellie Reid

PROJECT: COPNSTRUCTION ON STATE HIGHWAY IN FRESNO COUNTY AT VARIOUS LOCATIONS

LOCATION: IN DISTRICT 06 ON ROUTE 41, 180 (VARIOUS)

CONTRACTING AGENCY (OR OWNER): CALTRANS

BID DATE: **August 6, 2014** BID TIME: 2:00 PM

SEEKING: ALL TRADES ✓ OR OTHER TRADES (Specify) _____

PROJECT/SOLICITATION/BID OR IFB NUMBER: CALTRANS CONTRACT NO. 06-0M8204

OTHER INFORMATION (SPECIAL WORDING): OBE CONTRACT GOAL FOR THIS PROJECT IS 14%

PAYMENT AND PERFORMANCE BONDS MAY BE REQUIRED. WE WILL ASSIST WITH BONOS/INSURANCE/CREOIT. PLANS ARE AVAILABLE AT OUR OFFICE. WE ARE AN EQUAL OPPORTUNITY EMPLOYER AND SERIOUSLY INTEND TO NEGOTIATE WITH QUALIFIEO OBE, DBE, UOBE AND M/W/S/DVBE FIRMS.

FAX ORDER FORM TO: (951) 506-1137 OR (800) 548-4237

FOR INFORMATION PLEASE CALL: (951) 506-1887 OR (800) 570-7070

We reserve the right to refuse publication of any advertisement. (Rev. 7/2010 dg.)

Faxed 6/30/14 @ 4:21pm

3

WEBSITE ADVERTISEMENTS

Home » Contract Awards and Services » **Advertised Projects This Week**

Listing for all primes seeking assistance with project 06-0M8204. 7 results found.

Contractor: AMERICAN PAVING COMPANY **Contact:** Estimating Department
Address: 315 N. Thorne Fresno CA 93706
Phone: 559-268-9886 **Fax:** 559-268-2908 **Email:** APC-Estimating@americanpavingco.com
Services needed: AMERICAN PAVING CO., an Equal Opportunity Employer, is inviting and encouraging responsible participation of DBE subcontractors and suppliers for, but not limited to, the following scopes of work: Lead Compliance Plan, SWPPP, Construction area signs, traffic control system,K-rail, crash cushions, clearing and grubbing,landscaping and erosion control, HMA, Underground pipe, concrete barriers, rock slope protection, thermoplastic pavement marking, ramp metering system, electrical, pipe culverts, channelizers, removal of guardrails, asphalt concrete dike and curbing.
Requirements: American Paving Co. is signatory to the Operating Engineers, Cements Masons, Carpenters and Laborers Unions. Qualified participants must be licensed for the work they are to perform. Insurance, including Workers Compensation will be required. Bonds may also be required. APC can assist you in obtaining sufficient bonding and/or insurance, as well as materials and/or supplies to enable qualified DBE subcontractors to submit timely, competitive bids. You can call or e-mail for further information: 559-268-9886 or APC-Estimating@americanpavingco.com
Date posted: 07/21/2014

Contractor: AMERICAN PAVING COMPANY **Contact:** Estimating Department
Address: 315 N. Thorne Fresno CA 93706
Phone: 559-268-9886 **Fax:** 559-268-2908 **Email:** APC-Estimating@americanpavingco.com
Services needed: AMERICAN PAVING CO., an Equal Opportunity Employer, is inviting and encouraging responsible participation of DBE subcontractors and suppliers for, but not limited to, the following scopes of work: Lead Compliance Plan, SWPPP, Construction area signs, traffic control system,K-rail, crash cushions, clearing and grubbing,landscaping and erosion control, HMA, Underground pipe, concrete barriers, rock slope protection, thermoplastic pavement marking, ramp metering system, electrical, pipe culverts, channelizers, removal of guardrails, asphalt concrete dike and curbing.
Requirements: American Paving Co. is signatory to the Operating Engineers, Cements Masons, Carpenters and Laborers Unions. Qualified participants must be licensed for the work they are to perform. Insurance, including Workers Compensation will be required. Bonds may also be required. APC can assist you in obtaining sufficient bonding and/or insurance, as well as materials and/or supplies to enable qualified DBE subcontractors to submit timely, competitive bids. You can call or e-mail for further information: 559-268-9886 or APC-Estimating@americanpavingco.com
Date posted: 07/21/2014

Contractor: Eslick Construction, Inc. **Contact:** Tal Eslick
Address: 458 W. Beverly Drive Clovis, CA 93612
Phone: 559-593-8630 **Fax:** 559-298-6275 **Email:** Eslickconstruction@yahoo.com
Services needed: Eslick Construction is requesting bids from qualified DBE subcontractors and suppliers for: Alternate Crash Cushion System, Clearing and Grubbing, Saw Cutting, Demolition, Lead Compliance Plan, SWPPP, SWPPP Materials, Temporary Concrete Washout, Dust Control, Water Pollution Control Plan, Erosion Control, Highway Planting, Irrigation System, Landscape and Irrigation, Street Sweeping, Tack Coat, Concrete pumping, Channelizer, Construction Area Signs, Crash Cushion, Delineator, K-Rail, Object marker, Portable Changeable Message Signs, Traffic Control, Temporary Crash Cushion, Temporary Striping, Striping, Type III Barricade, Electrical, RCP, Alt Pipe Culvert, Welded Steel Pipe, Misc. Iron, Schedule CPM, Trucking or any additional services or

materials used in Item Descriptions. Please call or Email our office for additional information regarding Plans & Specification or Drawings.
Requirements: Requirements: Subcontractors may be required to obtain 100% Payment and 100% Performance with bond premiums paid up to 1.5%. Appropriate license, insurance, and workers compensation will be required. Eslick Construction is an Equal Opportunity Employer.
Date posted: 07/21/2014

Contractor: Granite Construction Company **Contact:** Rick Spielman
Address: 2716 Granite Court Fresno, CA 93706
Phone: 559-441-5726 **Fax:** 559-263-9601 **Email:** rick.spielman@gcinc.com
Services needed: Granite Construction Company is requesting quotes from all qualified subcontractors and suppliers including certified DBE firms for the following items of work, including but not limited to: Traffic Control, SWPPP items, Demolition, Concrete Barrier, AC Paving, Storm Drain, Highway Planting/Irrigation, Striping, Modify Ramp Metering System, Modify Lighting and Trucking Quotations will be broken down into comparable packages as reasonably necessary. Granite will work with interested subcontractors to identify opportunities to break down items into economically feasible packages.
Requirements: Granite Construction Company is signatory to Operating Engineers, Laborers, Teamsters, Cement Masons and Carpenters unions. 100% performance and payment bonds may be required for the full amount of subcontract price. Granite will pay for bond premium up to 1.5%. Subcontractors must possess a current contractor?s license, insurance and worker?s compensation coverage meeting Granite?s requirements and will be required to sign the standard Granite Subcontract Agreement. A copy of the insurance requirements and agreement can be obtained by contacting the estimator. Please call if you need assistance in obtaining bonding, insurance, equipment, materials and/or supplies. Granite intends to work cooperatively with all qualified firms seeking work on this project. An Equal Opportunity Employer
Date posted: 07/22/2014

Contractor: Emmett's Excavation, Inc. **Contact:** Ryan Lanser
Address: 6207 E. Clinton Ave Fresno
Phone: 5593479188 **Fax:** 5593489272 **Email:** mail@eei78.com
Services needed: Emmett's Excavation, Inc. is requesting quotes from all qualified subcontractors and suppliers including certified UDBE, DVBE, MBE, WBE, SBE, DBE, and or any other certified minority or underutilized firms for the following project & items of work, including but not limited to the items listed below: Lead Compliance Plan, Prepare Water Pollution Control Program, CAS, Channelizer (Surface Mounted), Portable Changeable Message Signs (PCMS), Traffic Control System, Type III Barricade, Temp Railing (Type K), Temp Crash Cushion Module, Temp Silt Fence, Treated Wood Waste, Remove Guardrail, Clearing and Grubbing, Roadway Excavation, Prune Existing Plants, Wood Mulch, Hydromulch, Hydroseed, Class 2 Aggregate Base, Minor HMA, Minor Concrete, Single Sheet Aluminum Sign, 18" & 24" Alt. Pipe Culvert, 18" RCP, 36" Corrugated Steel Pipe Inlet, 24" Alt Flared End Section, Rock Slope Protection (No. 1, Method B) and Fabric (Class 8), Misc. Iron and Steel, Concrete Barrier Delineators and Markers, Concrete Barrier Transition Connection, Alt. Crash Cushion System, Concrete Barrier (Type 60 & 60C), Thermoplastic Pavement Marking, Modify Ramp Metering System, Modify Lighting, and any and all bid items involved
Requirements: Emmett's Excavation, Inc. is signatory to Operating Engineers, Laborers, Cement Masons, and Carpenters Unions. 100% performance and payment bonds may be required for the full amount of the subcontract price. Subcontractors must possess a current contractor's license, insurance and worker's compensation insurance coverage meeting Emmett's Excavation, Inc's requirements and will be required to sign the standard Emmett's Excavation, Inc. Subcontract Agreement. A copy of the insurance requirements and agreements can be obtained by contacting Estimator, Ryan Lanser at (559) 347-9188. Plans and specifications are available for viewing through

the following: on the Caltrans website at http://www.dot.ca.gov/hq/esc/oe/weekly_ads/all_advertised.php, or our office located at 6207 E. Clinton Avenue, Fresno, CA 93727. Please call if you need assistance in obtaining bonding, insurance, equipment, materials, and/or supplies, or any other information or assistance to help you to be able to bid on this project. Emmett's Excavation, Inc. will break out smaller portions of work to make it more feasible for smaller subcontractors and suppliers, as needed. Emmett's Excavation, Inc. intends to work cooperatively with all qualified firms seeking work on this project. Emmett's Excavation, Inc. is an equal opportunity employer.
Date posted: 07/24/2014

Contractor: O'Donnell Construction, Inc. **Contact:** Neil O'Donnell
Address: 559 W. Covina Blvd. San Dimas, CA 91773
Phone: 909 394-4510 **Fax:** 909 394-4750 **Email:** neil@odonnellconst.com
Services needed: Lead Compliance Plan, Construction Area Signs, Traffic Control System, Type III Barricade, Temporary Traffic Stripe (Paint), Channelizer (Surface Mounted), Portable Changeable Message Sign, Temporary Railing (Type K), Temporary Crash Cushion Module, Temporary Crash Cushion (ABSORB 350TL2), Temporary Crash Cushion (ABSORB 350TL3), Prepare W.P.C.P., Temporary Drainage Inlet Protection, Temporary Silt Fence, Temporary Concrete Washout, Treated Wood Waste, Remove Guardrail, Remove Thermoplastic Pavement Marking, Remove Roadside Sign (Strap and Saddle Bracket Method), Remove Roadside Sign Panel, Remove Asphalt Concrete Dike, Remove Inlet, Relocate Roadside Sign, Remove Concrete Curb, Clearing & Grubbing, Roadway Excavation, Imported Borrow, Prune Existing Plants, Maintain Existing Planted Areas, Wood Mulch, Check and Test Existing Irrigation Facilities, Operate Existing Irrigation Facilities, 3? Plastic Pipe (Class 315) (Supply Line), 10? Welded Steel Pipe Conduit, Move-In/Move-Out (Erosion Control), Hydromulch, Straw, Hydroseed, Class 2 Aggregate Base, Minor Hot Mix Asphalt, Place Hot Mix Asphalt Dike (Type E), Place Hot Mix Asphalt (Miscellaneous Area), Minor Concrete (Minor Structure), Furnish Single Sheet Aluminum Sign (0.063? Unframed), Furnish Single Sheet Aluminum Sign (0.080? Unframed), Roadside Sign ? One Post, Install Sign (Strap and Saddle Bracket Method), Install Roadside Sign Panel on Existing Post, 18? Alternative Pipe Culvert, 24? Alternative Pipe Culvert, 18? Reinforced Concrete Pipe, 36? Corrugated Steel Pipe Inlet (.064? Thick), 24? Alternative Flared End Section, Rock Slope Protection (No. 1, Method B), Rock Slope Protection Fabric (Class 8), Minor Concrete (Curb), Miscellaneous Iron & Steel, Concrete Barrier Delineators, Concrete Barrier Markers, Concrete Barrier Transition Connection, Alternative Crash Cushion System, Concrete Barrier (Type 60), Concrete Barrier (Type 60C), Thermoplastic Pavement Marking, Modify Ramp Metering System, Modify Lighting
Requirements: O?Donnell Construction Inc. is an Equal Opportunity Employer. We intend to negotiate in good faith with all qualified subcontractors and suppliers for project participation. 100% Performance and Payment Bonds may be required for the full amount of subcontract price. Please call if you need assistance in obtaining bonding, insurance, equipment, supplies and/or materials for this project. Plans and specifications are available to be viewed by appointment at our office located at 559 W. Covina Blvd., San Dimas, CA 91773 or at the Caltrans website. Subcontractors must possess a current contractor?s license, insurance and worker?s compensation coverage meeting Caltrans? requirements and will be required to sign the standard O?Donnell Construction, Inc. Subcontract Agreement.
Date posted: 07/31/2014

Contractor: West Coast Structures, Inc. dba Western Structures **Contact:** Wolf Delgado
Address: 6005 Tyler St. Riverside, CA 92503
Phone: 951-352-4300 **Fax:** 951-509-9390 **Email:** haydeews4300@sbcglobal.net
Services needed: WESTERN STRUCTURES IS REQUESTING QUOTES FROM ALL QUALIFIED SUBCONTRACTORS AND SUPPLIERS INCLUDING CERTIFIED DBE FIRMS FOR THE

FOLLOWING ITEMS OF WORK, INCLUDING BUT NOT LIMITED TO: LCP, CONST AREA SIGNS,TRAFFIC CONTROL SYSTEM,TYPE III BARRICADE,TEMPORARY TRAFFIC STRIPE (PAINT),CHANNELIZER (SURFACE MOUNTED),PORTABLE CHANGEABLE MESSAGE SIGN,TEMPORARY RAILING (TYPE K),TEMPORARY CRASH CUSHION MODULE,TEMPORARY CRASH CUSHION (ABSORB 350TL2),TEMPORARY CRASH CUSHION (ABSORB 350TL3),JOB SITE MANAGEMENT,PREPARE WATER POLLUTION CONTROL PROGRAM,TEMPORARY DRAINAGE INLET PROTECTION,TEMPORARY SILT FENCE,TEMPORARY CONCRETE WASHOUT,TREATED WOOD WASTE,REMOVE GUARDRAIL,REMOVE THERMOPLASTIC PAVEMENT MARKING,REMOVE ROADSIDE SIGN (STRAP AND SADDLE BRACKET METHOD),REMOVE ROADSIDE SIGN PANEL,REMOVE ASPHALT CONCRETE DIKE,REMOVE INLET,RELOCATE ROADSIDE SIGN,REMOVE CONCRETE CURB,SALVAGE CRASH CUSHION,CLEARING AND GRUBBING (LS),ROADWAY EXCAVATION,IMPORTED BORROW (CY),PRUNE EXISTING PLANTS,MAINTAIN EXISTING PLANTED AREAS,WOOD MULCH,CHECK AND TEST EXISTING IRRIGATION FACILITIES,OPERATE EXISTING IRRIGATION FACILITIES,3" PLASTIC PIPE (CLASS 315) (SUPPLY LINE),10" WELDED STEEL PIPE CONDUIT,MOVE-IN/MOVE-OUT (EROSION CONTROL),HYDROMULCH,STRAW,HYDROSEED,CLASS 2 AGGREGATE BASE, MINOR HOT MIX ASPHALT,PLACE HOT MIX ASPHALT DIKE (TYPE E),PLACE HOT MIX ASPHALT (MISCELLANEOUS AREA),MINOR CONCRETE (MINOR STRUCTURE),FURNISH SINGLE SHEET ALUMINUM SIGN (0.063"-UNFRAMED),FURNISH SINGLE SHEET ALUMINUM SIGN (0.080"-UNFRAMED),ROADSIDE SIGN - ONE POST,INSTALL SIGN (STRAP AND SADDLE BRACKET METHOD),INSTALL ROADSIDE SIGN PANEL ON EXISTING POST,18" ALTERNATIVE PIPE CULVERT,24" ALTERNATIVE PIPE CULVERT,18" REINFORCED CONCRETE PIPE,36" CORRUGATED STEEL PIPE INLET (.064" THICK),24" ALTERNATIVE FLARED END SECTION,ROCK SLOPE PROTECTION (NO. 1, METHOD B),ROCK SLOPE PROTECTION FABRIC (CLASS 8),MINOR CONCRETE (CURB),MISCELLANEOUS IRON AND STEEL,CONCRETE BARRIER DELINEATORS,CONCRETE BARRIER MARKERS,CONCRETE BARRIER TRANSITION CONNECTION,ALTERNATIVE CRASH CUSHION SYSTEM,CONCRETE BARRIER (TYPE 60),CONCRETE BARRIER (TYPE 60C),THERMOPLASTIC PAVEMENT MARKING,MAINTAINING EXISTING TRAFFIC MANAGEMENT SYSTEM ELEMENTS DURING CONSTRUCTION,MODIFY RAMP METERING SYSTEM,MODIFY LIGHTING, MOBILIZATION

Requirements: Western Structures is a union signatory contractor. Subcontractors must have a current contractors license and insurance coverage that meets Western Structures requirements. Plans and Specifications are available for viewing at Western Structures office located at 6005 Tyler Street, Riverside CA 92503 or by viewing at CALTRANS http://www/dot.ca.gov/hq/esc/oe/weekly_ads/all_adv_projects.php. Western Structures is an equal opportunity employer. Assistance such as bonding, insurance and/or necessary supplies and materials is available. DBE contractors are encouraged to submit quotations

Date posted: 08/12/2014

Search Results: Planholders

13 records found.

06-0M8204	American Paving Co.	
	315 N. Thorne Ave. Fresno, CA 93706	
	Phone: 559 268-9886	Fax Number: 559 268-2908
	Bid Date: 2014-08-27	Date Shipped: 06/30/2014
	Bid Packages Ordered: 1	Non-bid packages ordered:

06-0M8204	Bowman Asphalt, Inc.	
	3351 Fairhaven Drive Bakersfield, CA 93308	
	Phone: 661-334-1356	Fax Number: 661-334-1879
	Bid Date: 2014-08-27	Date Shipped: 06/30/2014
	Bid Packages Ordered: 1	Non-bid packages ordered:

06-0M8204	Cal Valley Construction, Inc.	
	6275 W. Bullard Ave Fresno, CA 93722	
	Phone: 5592740300	Fax Number: 5592740311
	Bid Date: 2014-08-27	Date Shipped: 07/02/2014
	Bid Packages Ordered: 1	Non-bid packages ordered:

06-0M8204	Cal Valley Construction, Inc.	
	6275 W. Bullard Ave. Fresno, CA 93722-9320	
	Phone: 559-274-0300	Fax Number: 559-274-0311
	Bid Date: 2014-08-27	Date Shipped: 07/02/2014
	Bid Packages Ordered: 1	Non-bid packages ordered:

06-0M8204	Dreambuilder	
	1324 E. Lawson Ln Placentia, Ca 92870	
	Phone: 714-646-3697	Fax Number: 714-646-3698
	Bid Date: 2014-08-27	Date Shipped: 07/02/2014
	Bid Packages Ordered: 1	Non-bid packages ordered:

	Emmett's Excavation, Inc.	

06-0M8204	6207 E. Clinton Ave Fresno	
	~~Phone: 5593479188~~	~~Fax Number: 5593489272~~
	Bid Date: 2014-08-27	Date Shipped: 07/01/2014
	Bid Packages Ordered: 1	Non-bid packages ordered:

06-0M8204	Eslick Construction, Inc.	
	458 W. Beverly Drive Clovis, CA 93612	
	Phone: 559-593-0311	Fax Number: 559-298-6275
	Bid Date: 2014-08-27	Date Shipped: 07/21/2014
	Bid Packages Ordered: 1	Non-bid packages ordered:

06-0M8204	FBD Vanguard Construction Inc	
	651 Enterprise Court Livermore, CA 94550	
	Phone: 925-245-1300	Fax Number: 925-245-1007
	Bid Date: 2014-08-27	Date Shipped: 07/17/2014
	Bid Packages Ordered: 1	Non-bid packages ordered:

06-0M8204	Granite Construction Company	
	2716 Granite Court Fresno, CA 93706	
	Phone: 559-441-5700	Fax Number: 559-263-9601
	Bid Date: 2014-08-27	Date Shipped: 07/02/2014
	Bid Packages Ordered: 1	Non-bid packages ordered:

06-0M8204	O'Donnell Construction, Inc.	
	559 W. Covina Blvd. San Dimas, CA 91773	
	Phone: 909 394-4510	Fax Number: 909 394-4750
	Bid Date: 2014-08-27	Date Shipped: 07/31/2014
	Bid Packages Ordered: 1	Non-bid packages ordered:

06-0M8204	RSB GROUP, INC.	
	20331 Lake Forest Drive C-13 Lake Forest, CA 92630	
	Phone: 949.454.1999	Fax Number: 949.454.1888
	Bid Date: 2014-08-27	Date Shipped: 08/10/2014
	Bid Packages Ordered: 1	Non-bid packages ordered:

	SLS Construction Inc.

06-0M8204	10769 Woodside Ave., Suite 202 Santee, CA. 92071	
	Phone: (619) 448-8928	Fax Number: (866) 440-0002
	Bid Date: 2014-08-27	Date Shipped: 07/05/2014
	Bid Packages Ordered: 1	Non-bid packages ordered:

06-0M8204	West Coast Structures, Inc. dba Western Structures	
	6005 Tyler St. Riverside, CA 92503	
	Phone: 951-352-4300	Fax Number: 951-509-9390
	Bid Date: 2014-08-27	Date Shipped: 08/08/2014
	Bid Packages Ordered: 1	Non-bid packages ordered:

Home » Contract Awards and Services » **Advertised Projects This Week**

Listing for all primes seeking assistance with project 06-0M8204. 5 results found.

Contractor: AMERICAN PAVING COMPANY **Contact:** Estimating Department
Address: 315 N. Thorne Fresno CA 93706
Phone: 559-268-9886 **Fax:** 559-268-2908 **Email:** APC-Estimating@americanpavingco.com
Services needed: AMERICAN PAVING CO., an Equal Opportunity Employer, is inviting and encouraging responsible participation of DBE subcontractors and suppliers for, but not limited to, the following scopes of work: Lead Compliance Plan, SWPPP, Construction area signs, traffic control system,K-rail, crash cushions, clearing and grubbing,landscaping and erosion control, HMA, Underground pipe, concrete barriers, rock slope protection, thermoplastic pavement marking, ramp metering system, electrical, pipe culverts, channelizers, removal of guardrails, asphalt concrete dike and curbing.
Requirements: American Paving Co. is signatory to the Operating Engineers, Cements Masons, Carpenters and Laborers Unions. Qualified participants must be licensed for the work they are to perform. Insurance, including Workers Compensation will be required. Bonds may also be required. APC can assist you in obtaining sufficient bonding and/or insurance, as well as materials and/or supplies to enable qualified DBE subcontractors to submit timely, competitive bids. You can call or e-mail for further information: 559-268-9886 or APC-Estimating@americanpavingco.com
Date posted: 07/21/2014

Contractor: AMERICAN PAVING COMPANY **Contact:** Estimating Department
Address: 315 N. Thorne Fresno CA 93706
Phone: 559-268-9886 **Fax:** 559-268-2908 **Email:** APC-Estimating@americanpavingco.com
Services needed: AMERICAN PAVING CO., an Equal Opportunity Employer, is inviting and encouraging responsible participation of DBE subcontractors and suppliers for, but not limited to, the following scopes of work: Lead Compliance Plan, SWPPP, Construction area signs, traffic control system,K-rail, crash cushions, clearing and grubbing,landscaping and erosion control, HMA, Underground pipe, concrete barriers, rock slope protection, thermoplastic pavement marking, ramp metering system, electrical, pipe culverts, channelizers, removal of guardrails, asphalt concrete dike and curbing.
Requirements: American Paving Co. is signatory to the Operating Engineers, Cements Masons, Carpenters and Laborers Unions. Qualified participants must be licensed for the work they are to perform. Insurance, including Workers Compensation will be required. Bonds may also be required. APC can assist you in obtaining sufficient bonding and/or insurance, as well as materials and/or supplies to enable qualified DBE subcontractors to submit timely, competitive bids. You can call or e-mail for further information: 559-268-9886 or APC-Estimating@americanpavingco.com
Date posted: 07/21/2014

Contractor: Eslick Construction, Inc. **Contact:** Tal Eslick
Address: 458 W. Beverly Drive Clovis, CA 93612
Phone: 559-593-8630 **Fax:** 559-298-6275 **Email:** Eslickconstruction@yahoo.com
Services needed: Eslick Construction is requesting bids from qualified DBE subcontractors and suppliers for: Alternate Crash Cushion System, Clearing and Grubbing, Saw Cutting, Demolition, Lead Compliance Plan, SWPPP, SWPPP Materials, Temporary Concrete Washout, Dust Control, Water Pollution Control Plan, Erosion Control, Highway Planting, Irrigation System, Landscape and Irrigation, Street Sweeping, Tack Coat, Concrete pumping, Channelizer, Construction Area Signs, Crash Cushion, Delineator, K-Rail, Object marker, Portable Changeable Message Signs, Traffic Control, Temporary Crash Cushion, Temporary Striping, Striping, Type III Barricade, Electrical, RCP, Alt Pipe Culvert, Welded Steel Pipe, Misc. Iron, Schedule CPM, Trucking or any additional services or

materials used in Item Descriptions. Please call or Email our office for additional information regarding Plans & Specification or Drawings.
Requirements: Requirements: Subcontractors may be required to obtain 100% Payment and 100% Performance with bond premiums paid up to 1.5%. Appropriate license, insurance, and workers compensation will be required. Eslick Construction is an Equal Opportunity Employer.
Date posted: 07/21/2014

Contractor: Granite Construction Company **Contact:** Rick Spielman
Address: 2716 Granite Court Fresno, CA 93706
Phone: 559-441-5726 **Fax:** 559-263-9601 **Email:** rick.spielman@gcinc.com
Services needed: Granite Construction Company is requesting quotes from all qualified subcontractors and suppliers including certified DBE firms for the following items of work, including but not limited to: Traffic Control, SWPPP items, Demolition, Concrete Barrier, AC Paving, Storm Drain, Highway Planting/Irrigation, Striping, Modify Ramp Metering System, Modify Lighting and Trucking Quotations will be broken down into comparable packages as reasonably necessary. Granite will work with interested subcontractors to identify opportunities to break down items into economically feasible packages.
Requirements: Granite Construction Company is signatory to Operating Engineers, Laborers, Teamsters, Cement Masons and Carpenters unions. 100% performance and payment bonds may be required for the full amount of subcontract price. Granite will pay for bond premium up to 1.5%. Subcontractors must possess a current contractor?s license, insurance and worker?s compensation coverage meeting Granite?s requirements and will be required to sign the standard Granite Subcontract Agreement. A copy of the insurance requirements and agreement can be obtained by contacting the estimator. Please call if you need assistance in obtaining bonding, insurance, equipment, materials and/or supplies. Granite intends to work cooperatively with all qualified firms seeking work on this project. An Equal Opportunity Employer
Date posted: 07/22/2014

Contractor: Emmett's Excavation, Inc. **Contact:** Ryan Lanser
Address: 6207 E. Clinton Ave Fresno
Phone: 5593479188 **Fax:** 5593489272 **Email:** mail@eei78.com
Services needed: Emmett's Excavation, Inc. is requesting quotes from all qualified subcontractors and suppliers including certified UDBE, DVBE, MBE, WBE, SBE, DBE, and or any other certified minority or underutilized firms for the following project & items of work, including but not limited to the items listed below: Lead Compliance Plan, Prepare Water Pollution Control Program, CAS, Channelizer (Surface Mounted), Portable Changeable Message Signs (PCMS), Traffic Control System, Type III Barricade, Temp Railing (Type K), Temp Crash Cushion Module, Temp Silt Fence, Treated Wood Waste, Remove Guardrail, Clearing and Grubbing, Roadway Excavation, Prune Existing Plants, Wood Mulch, Hydromulch, Hydroseed, Class 2 Aggregate Base, Minor HMA, Minor Concrete, Single Sheet Aluminum Sign, 18" & 24" Alt. Pipe Culvert, 18" RCP, 36" Corrugated Steel Pipe Inlet, 24" Alt Flared End Section, Rock Slope Protection (No. 1, Method B) and Fabric (Class 8), Misc. Iron and Steel, Concrete Barrier Delineators and Markers, Concrete Barrier Transition Connection, Alt. Crash Cushion System, Concrete Barrier (Type 60 & 60C), Thermoplastic Pavement Marking, Modify Ramp Metering System, Modify Lighting, and any and all bid items involved
Requirements: Emmett's Excavation, Inc. is signatory to Operating Engineers, Laborers, Cement Masons, and Carpenters Unions. 100% performance and payment bonds may be required for the full amount of the subcontract price. Subcontractors must possess a current contractor's license, insurance and worker's compensation insurance coverage meeting Emmett's Excavation, Inc's requirements and will be required to sign the standard Emmett's Excavation, Inc. Subcontract Agreement. A copy of the insurance requirements and agreements can be obtained by contacting Estimator, Ryan Lanser at (559) 347-9188. Plans and specifications are available for viewing through

the following: on the Caltrans website at http://www.dot.ca.gov/hq/esc/oe/weekly_ads/all_advertised.php, or our office located at 6207 E. Clinton Avenue, Fresno, CA 93727. Please call if you need assistance in obtaining bonding, insurance, equipment, materials, and/or supplies, or any other information or assistance to help you to be able to bid on this project. Emmett's Excavation, Inc. will break out smaller portions of work to make it more feasible for smaller subcontractors and suppliers, as needed. Emmett's Excavation, Inc. intends to work cooperatively with all qualified firms seeking work on this project. Emmett's Excavation, Inc. is an equal opportunity employer.

Date posted: 07/24/2014

CDOT

Print Bidders

CALIFORNIA DEPT OF TRANSPORTATION (CALTRANS)

DOT 06-0M8204 WIDEN SHOULDER AND CONSTRUCT CONCRETE BARRIER

		Company Name	Phone	Fax	Type	Bid Package	Plan Holder	Confirmed	Awarded	Bid Amount	Note
		Cal Valley Construction, Inc.	(559) 274-0300	(559) 274-0311	General Contractor		No	No	No		
		Emmett's Excavation, inc.	(559) 299-1256	(559) 299-0281	General Contractor		No	No	No		

4

RECORD OF CONTACT WITH SBA ASSISTANCE CENTER

Emmett's Excavation, Inc.

6207 E. Clinton Ave., Fresno, CA 93727
Tel: (559) 347-9188 Fax: (559) 348-9272
California License # 579845

REQUESTING SUB BIDS FROM CERTIFIED DBE, MBE AND WBE SUBCONTRACTORS

DATE: August 26, 2014

COMPANY: Small Business Administration – Fresno District Office

ATTN: Lori Lesher **PLEASE NOTE REVISED BID DATE!**

PHONE #: (559) 487-5791

FAX #: (559) 487-5636

FROM: Kellie Reid - Estimating

PAGES: 2 (includes this page)

BID DATE: **SEPTEMBER 3, 2014 @ 2:00 PM**

PROJECT: **CALTRANS**

FOR CONSTRUCTION ON STATE HIGHWAY IN FRESNO COUNTY
AT VARIOUS LOCATIONS
IN DISTRICT 06 ON ROUTE 41, 180
CONTRACT NO. 06-0M8204
FEDERAL PROJECT NO. ACHSNHPG-X019(028)E

Work must be completed within 70 working days
Liquidated Damages are $1,900 per day
Prevailing Wage Rates are Required
Engineer's Estimate: $930,000.00

Emmett's Excavation, Inc. is bidding this project as a Prime Contractor. We are seeking Sub Bids from qualified DBE, MBE, & WBE minority status Subcontractors. There is a **14% DBE** participation goal for this project.

We have broken down work items into economically feasible portions to facilitate minority Subcontractor participation. We need Subcontractors for the following items of work:

ALL BID ITEMS, SEE ATTACHED BID LIST

Please contact us if you know any DBE, MBE, or WBE Subcontractor's qualified to perform on the above items of work.

We request all firm's scope letters be faxed to (559) 348-9272 prior to 3:00 pm on **Tuesday, September 2, 2014**, and all sub-bid proposal's be faxed prior to 11:00 am on **Wednesday, September 3, 2014.**

DO NOT FAX YOUR BID TO US PAST 1:00 PM ON BID DAY. WE CANNOT USE BIDS THAT ARE FAXED TOO LATE!!!

Copies of the Project Plans, Special Provisions, Addendums and other documents may be obtained from:

County of Fresno
Department of Public Works and Planning
2220 Tulare Street, Sixth Floor
Fresno, CA 93721-2104
(559) 600-4328

You can also arrange to view the Plans and Specifications at our office by appointment only. To make an appointment or should you have any questions or need further assistance regarding this bid, please contact our office at (559) 347-9188.

Please sign this form to acknowledge receipt and fax back to (559) 348-9272 as a record of contact.

Signature:_____ Position:_____ Company:_____ Date:_____

Thank You,

Kellie Reid, Estimating
EMMETT'S EXCAVATION, INC.
Email. mail@eei78.com

Faxed 8/26/14 @ 8 4:11 pm

DEPARTMENT OF TRANSPORTATION
DIVISION OF ENGINEERING SERVICES
OFFICE ENGINEER
1727 30th Street MS-43
P.O. BOX 168041
SACRAMENTO, CA 95816-8041
FAX (916) 227-6214
www.dot.ca.gov/hq/esc/oe

Serious Drought.
Help save water!

August 26, 2014

06-Fre-41,180-Var
06-0M8204
Project ID 0600020013
ACHSNHPG-X019(028)E

Addendum No. 5

Dear Contractor:

This addendum is being issued to the contract for CONSTRUCTION ON STATE HIGHWAY IN FRESNO COUNTY AT VARIOUS LOCATIONS.

Submit bids for this work with the understanding and full consideration of this addendum. The revisions declared in this addendum are an essential part of the contract.

This addendum is being issued to change the bid opening to Wednesday, September 3, 2014 instead of Wednesday, August 27, 2014.

To *Bid* book holders:

Inquiries or questions in regard to this addendum must be communicated as a bidder inquiry and must be made as noted in the *Notice to Bidders* section of the *Notice to Bidders and Special Provisions*.

Submit the Bid book as described in the *Electronic Bidding Guide* at the Bidders' Exchange website.

http://www.dot.ca.gov/hq/esc/oe/electronic_bidding/electronic_bidding.html

Inform subcontractors and suppliers as necessary.

This addendum and EBS addendum file are available for the Contractors' download on the Web site:

http://www.dot.ca.gov/hq/esc/oe/project_ads_addenda/06/06-0M8204

If you are not a *Bid* book holder, but request a book to bid on this project, you must comply with the requirements of this letter before submitting your bid.

Sincerely,

MOHSEN SULTAN
Chief, Office of Plans, Specifications & Estimates
Office Engineer
Division of Engineering Services

Emmett's Excavation, Inc.
6207 E. Clinton Avenue, Fresno, CA 93727
Tel: (559) 347-9188 Fax: (559) 348-9272
California License # 579845

REQUESTING SUB BIDS FROM CERTIFIED DBE, MBE AND WBE SUBCONTRACTORS

Revised Bid Date!!
See Below for Dates!

DATE: July 10, 2014
COMPANY: Small Business Administration – Fresno District Office
ATTN: Lori Lesher
PH #: (559) 487-5791
FAX#: (559) 487-5636
FROM: Kellie Reid
PAGES: 5 (Includes this page)

BID DATE: **August 27, 2014 @ 2:00 PM**

PROJECT: **CALTRANS**

FOR CONSTRUCTION ON STATE HIGHWAY IN FRESNO COUNTY
AT VARIOUS LOCATIONS
In District 06 on Route 41, 180
Contract No. 06-0M8204
Federal Project No. ACHSNHPG-X019(028)E

Work must be completed within 70 working days
Liquidated damages are $1,900 per day
Prevailing Wage Rates are required
Engineer's Estimate: $930,000.00

Emmett's Excavation, Inc. is bidding this project as a Prime Contractor. We are seeking Sub Bids from qualified DBE, MBE, & WBE minority status Subcontractors. There is a 14% DBE participation goal for this project.

We have broken down work Items into economically feasible portions to facilitate minority Subcontractor participation. We need Subcontractors for the following items of work:

ALL BID ITEMS, SEE ATTACHED BID LIST

Please contact us if you know any DBE, MBE, or WBE Subcontractor's qualified to perform on the above items of work.

We request all firm's scope letter's be faxed to (559) 348-9272 prior to 2:00 pm on Tuesday, August 26, 2014 and all sub-bid proposals be faxed prior to 11:00 am on Wednesday, August 27, 2014.

DO NOT FAX YOUR BID TO US PAST 1:00 PM ON BID DAY. WE CANNOT USE BIDS THAT ARE FAXED TOO LATE!!!

Copies of the Project Plans, Special Provisions, Addendums and other documents may be obtained from:

Department of Transportation
Bidder's Exchange, MS 26
1727 30th Street
Sacramento, CA 95816-7005
(916) 227-6235

Should you have any questions regarding the bid or need further assistance, feel free to contact our office at (559) 347-9188.

Please sign this form to acknowledge receipt and fax back to (559) 348-9272 as a record of contact.

Signature: _____ Position: _____ Company: _____ Date: _____

Thank You,

Kellie Reid, Estimating
EMMETT'S EXCAVATION, INC.
Email: mail@eei78.com

Faxed 7/10/14 @ 10:11am & 8/5/14 @ 9:40am

BID ITEM LIST

Item No.	Item Code	Item Description	Unit of Measure	Estimated Quantity
1	070030	LEAD COMPLIANCE PLAN	LS	LUMP SUM
2	120090	CONSTRUCTION AREA SIGNS	LS	LUMP SUM
3	120100	TRAFFIC CONTROL SYSTEM	LS	LUMP SUM
4	120120	TYPE III BARRICADE	EA	24
5	120159	TEMPORARY TRAFFIC STRIPE (PAINT)	LF	120
6	120165	CHANNELIZER (SURFACE MOUNTED)	EA	58
7	128652	PORTABLE CHANGEABLE MESSAGE SIGN (LS)	LS	LUMP SUM
8	129000	TEMPORARY RAILING (TYPE K)	LF	1,020
9	129100	TEMPORARY CRASH CUSHION MODULE	EA	11
10	027614	TEMPORARY CRASH CUSHION (ABSORB 350TL2)	EA	2
11	027615	TEMPORARY CRASH CUSHION (ABSORB 350TL3)	EA	1
12	130100	JOB SITE MANAGEMENT	LS	LUMP SUM
13	130200	PREPARE WATER POLLUTION CONTROL PROGRAM	LS	LUMP SUM
14	130620	TEMPORARY DRAINAGE INLET PROTECTION	EA	1
15	130680	TEMPORARY SILT FENCE	LF	1,150
16	130900	TEMPORARY CONCRETE WASHOUT	LS	LUMP SUM
17	141120	TREATED WOOD WASTE	LB	4,680
18	150661	REMOVE GUARDRAIL	LF	1,110
19	150715	REMOVE THERMOPLASTIC PAVEMENT MARKING	SQFT	140
20	150747	REMOVE ROADSIDE SIGN (STRAP AND SADDLE BRACKET METHOD)	EA	3

Item No.	Item Code	Item Description	Unit of Measure	Estimated Quantity
21	150748	REMOVE ROADSIDE SIGN PANEL	EA	10
22	150771	REMOVE ASPHALT CONCRETE DIKE	LF	1,490
23	150820	REMOVE INLET	EA	1
24	152390	RELOCATE ROADSIDE SIGN	EA	5
25	153130	REMOVE CONCRETE CURB (LF)	LF	450
26	158100	SALVAGE CRASH CUSHION	EA	2
27	160102	CLEARING AND GRUBBING (LS)	LS	LUMP SUM
28	190101	ROADWAY EXCAVATION	CY	180
29	198010	IMPORTED BORROW (CY)	CY	75
30	200052	PRUNE EXISTING PLANTS	LS	LUMP SUM
31	204096	MAINTAIN EXISTING PLANTED AREAS	LS	LUMP SUM
32	205035	WOOD MULCH	CY	670
33	206400	CHECK AND TEST EXISTING IRRIGATION FACILITIES	LS	LUMP SUM
34	206402	OPERATE EXISTING IRRIGATION FACILITIES	LS	LUMP SUM
35	208607	3" PLASTIC PIPE (CLASS 315) (SUPPLY LINE)	LF	60
36	208820	10" WELDED STEEL PIPE CONDUIT	LF	50
37	210010	MOVE-IN/MOVE-OUT (EROSION CONTROL)	EA	2
38	210300	HYDROMULCH	SQFT	8,520
39	210420	STRAW	TON	0.4
40	210430	HYDROSEED	SQFT	8,520

Item No.	Item Code	Item Description	Unit of Measure	Estimated Quantity
41	260203	CLASS 2 AGGREGATE BASE (CY)	CY	75
42	390136	MINOR HOT MIX ASPHALT	TON	270
43	394076	PLACE HOT MIX ASPHALT DIKE (TYPE E)	LF	490
44	394090	PLACE HOT MIX ASPHALT (MISCELLANEOUS AREA)	SQYD	11
45 (F)	510502	MINOR CONCRETE (MINOR STRUCTURE)	CY	3.3
46	560248	FURNISH SINGLE SHEET ALUMINUM SIGN (0.063"-UNFRAMED)	SQFT	42
47	560249	FURNISH SINGLE SHEET ALUMINUM SIGN (0.080"-UNFRAMED)	SQFT	140
48	566011	ROADSIDE SIGN - ONE POST	EA	1
49	568001	INSTALL SIGN (STRAP AND SADDLE BRACKET METHOD)	EA	3
50	568017	INSTALL ROADSIDE SIGN PANEL ON EXISTING POST	EA	10
51	620100	18" ALTERNATIVE PIPE CULVERT	LF	20
52	620140	24" ALTERNATIVE PIPE CULVERT	LF	180
53	650014	18" REINFORCED CONCRETE PIPE	LF	22
54	700637	36" CORRUGATED STEEL PIPE INLET (.064" THICK)	LF	5
55	705315	24" ALTERNATIVE FLARED END SECTION	EA	1
56	721026	ROCK SLOPE PROTECTION (NO. 1, METHOD B) (CY)	CY	8
57	729011	ROCK SLOPE PROTECTION FABRIC (CLASS 8)	SQYD	20
58	730020	MINOR CONCRETE (CURB) (CY)	CY	19
59 (F)	750001	MISCELLANEOUS IRON AND STEEL	LB	1,214
60	027616	CONCRETE BARRIER DELINEATORS	EA	42

Item No.	Item Code	Item Description	Unit of Measure	Estimated Quantity
61	027617	CONCRETE BARRIER MARKERS	EA	25
62	027618	CONCRETE BARRIER TRANSITION CONNECTION	LF	75
63	027619	ALTERNATIVE CRASH CUSHION SYSTEM	EA	5
64	839701	CONCRETE BARRIER (TYPE 60)	LF	770
65	839703	CONCRETE BARRIER (TYPE 60C)	LF	1,010
66	840515	THERMOPLASTIC PAVEMENT MARKING	SQFT	170
67	860090	MAINTAINING EXISTING TRAFFIC MANAGEMENT SYSTEM ELEMENTS DURING CONSTRUCTION	LS	LUMP SUM
68	861088	MODIFY RAMP METERING SYSTEM	LS	LUMP SUM
69	861503	MODIFY LIGHTING	LS	LUMP SUM
70	999990	MOBILIZATION	LS	LUMP SUM

Activity Report

07/16/2014 12:43
Serial No. A1UE011014047
TC: 318963

Send

J.	Addressee	Start Time	Time	Prints	Result	Note
2809	14152761924	07-08 14:25	00:01:01	002/002	OK	
2810	2443915	07-08 15:42	00:01:21	001/001	OK	
2811	4875636	07-08 16:22	00:00:59	002/002	OK	
2812	2642532	07-10 09:24	00:00:57	000/001	No Ans	
2813	2642532	07-10 09:30	00:00:26	001/001	OK	
2814	4875636	07-10 10:17	00:02:04	005/005	OK	
2815	2294825	07-10 14:57	00:00:28	001/001	OK	
2816	2443915	07-10 15:05	00:01:17	001/001	OK	
2817	4875636	07-14 09:10	00:01:38	004/004	OK	
2818	2917638	07-15 08:26	00:04:40	001/001	OK	
2819	6004399	07-15 09:22	00:01:25	002/002	OK	
2820	6004399	07-15 15:05	00:00:51	001/001	OK	
2821	4875636	07-16 09:27	00:01:39	004/004	OK	
2822	2642532	07-16 10:23	00:01:00	000/001	No Ans	
2823	2642532	07-16 11:03	00:00:31	001/001	OK	

Note TMR:Timer TX, POL:Polling, ORG:Original Size Setting, FME:Frame Erase TX,
DPG:Page Separation TX, MIX:Mixed Original TX, CALL:Manual TX, CSRC:CSRC,
FWD:Forward, PC:PC-FAX, BND:Double-Sided Binding Direction, SO:Special Original,
FCODE:F-Code, RTX:Re-TX, RLY:Relay, MBX:Confidential, BUL:Bulletin, SIP:SIP Fax,
IPADR:IP Address Fax, I-FAX:Internet Fax

Result OK: Communication OK, S-OK: Stop Communication, PW-OFF: Power Switch OFF,
TEL: RX from TEL, NG: Other Error, Cont: Continue, No Ans: No Answer,
Refuse: Receipt Refused, Busy: Busy, M-Full:Memory Full,
LOVR:Receiving length Over, POVR:Receiving page Over, FIL:File Error,
DC:Decode Error, MDN:MDN Response Error, DSN:DSN Response Error.

5

INVITATION'S TO BID FAXED TO DBE, MBE, AND WBE SUBCONTRACTORS

Emmett's Excavation, Inc.
6207 E. Clinton Ave., Fresno, CA 93727
Tel: (559) 347-9188 Fax: (559) 348-9272
California License # 579845

INVITATION TO BID

DATE: AUGUST 5, 2014

COMPANY:

REVISED

ATTN: Estimator

PHONE #:

FAX #:

FROM: Kellie Reid - Estimating

PAGES: 1 (includes this page)

BID DATE: AUGUST 27, 2014 @ 2:00 PM

PROJECT: CALTRANS

CONSTRUCTION ON STATE HIGHWAY IN FRESNO COUNTY AT VARIOUS LOCATIONS IN DISTRICT 06 ON ROUTE 41, 180
CONTRACT NO.: 06-0M9204

Work must be completed within 70 working days
Liquidated Damages are $1,800 per day
Prevailing Wage Rates are Required
Engineer's Estimate: $930,000.00

Emmett's Excavation, Inc. is bidding this project as a Prime Contractor. We are seeking Sub Bids from qualified DBE, MBE, & WBE minority status Subcontractors. There is a 14% DBE participation goal for this project.

We have broken down work items into economically feasible portions to facilitate minority Subcontractor participation. We need Subcontractors for the following items of work:

ALL BID ITEMS, SEE ATTACHED BID LIST

Please contact us if you know any MBE, WBE, or DBE Subcontractor's qualified to perform on the above items of work.

We request all firm's scope letters be faxed to (559) 348-9272 prior to 2:00 pm on Tuesday, August 26, 2014, and all sub-bid proposals be faxed prior to 11:00 am on Wednesday, August 27, 2014.

DO NOT FAX YOUR BID TO US PAST 1:00 PM ON BID DAY. WE CANNOT USE BIDS THAT ARE FAXED TOO LATE!!!

Copies of the Project Plans, Special Provisions, Addendums and other documents may be obtained from:

Department of Transportation
Bidder's Exchange, MS 26
1727 30th Street
Sacramento, CA 95816-7005
(916) 227-6235

You can also arrange to view the Plans and Specifications at our office by appointment only. Should you have any questions regarding the bid or to make an appointment, please contact our office at (559) 347-9188.

Please sign this form to acknowledge receipt and fax back to (559) 348-9272 as a record of contact.

Signature: [signature] Position: ESTIMATOR Company: ACE FENCE CO. Date: 8/22/14

Thank You,

Kellie Reid, Estimating
EMMETT'S EXCAVATION, INC.
Email, mail@eef76.com

Emmett's Excavation, Inc.
6207 E. Clinton Ave., Fresno, CA 93727
Tel: (559) 347-9188 Fax: (559) 348-9272
California License # 579845

INVITATION TO BID

DATE: July 10, 2014
COMPANY:
ATTN: Estimator
PHONE #:
EMAIL:
FROM: Kellie Reid - Estimating
PAGES: 5 (includes this page)
BID DATE: August 6, 2014 @ 2:00 PM
PROJECT: CALTRANS

CONSTRUCTION ON STATE HIGHWAY IN FRESNO COUNTY AT VARIOUS LOCATIONS IN DISTRICT 06 ON ROUTE 41, 180
CONTRACT NO.: 06-0M8204

Work must be completed within 70 working days
Liquidated Damages are $1,900 per day
Prevailing Wage Rates are Required
Engineer's Estimate: $930,000.00

Emmett's Excavation, Inc. is bidding this project as a Prime Contractor. We are seeking Sub Bids from qualified DBE, MBE, & WBE minority status Subcontractors. There is a 14% DBE participation goal for this project.

We have broken down work items into economically feasible portions to facilitate minority Subcontractor participation. We need Subcontractors for the following items of work:

ALL BID ITEMS, SEE ATTACHED BID LIST

Please contact us if you know any MBE, WBE, or DBE Subcontractor's qualified to perform on the above items of work.

We request all firm's scope letters be faxed to (559) 348-9272 prior to 2:00 pm on Tuesday, August 5, 2014, and all sub-bid proposals be faxed prior to 11:00 am on Wednesday, August 6, 2014.

DO NOT FAX YOUR BID TO US PAST 1:00 PM ON BID DAY. WE CANNOT USE BIDS THAT ARE FAXED TOO LATE!!!

Copies of the Project Plans, Special Provisions, Addendums and other documents may be obtained from:

Department of Transportation
Bidder's Exchange, MS 26
1727 30th Street
Sacramento, CA 95816-7005
(916) 227-6235

You can also arrange to view the Plans and Specifications at our office by appointment only. Should you have any questions regarding the bid or to make an appointment, please contact our office at (559) 347-9188.

Please sign this form to acknowledge receipt and fax back to (559) 348-9272 as a record of contact.

Signature: [signature] Position: President Company: Nitta, Inc. Date: 8/4/14

Thank You,

Kellie Reid, Estimating
EMMETT'S EXCAVATION, INC.
Email. mail@eei78.com

Emmett's Excavation, Inc.
6207 E. Clinton Ave., Fresno, CA 93727
Tel: (559) 347-9188 Fax: (559) 348-9272
California License # 579845

INVITATION TO BID

DATE: July 10, 2014

COMPANY:

ATTN: Estimator

PHONE #:

FAX #:

FROM: Kellie Reid - Estimating

PAGES: 5 (includes this page)

BID DATE: **August 6, 2014 @ 2:00 PM**

PROJECT: **CALTRANS**

CONSTRUCTION ON STATE HIGHWAY IN FRESNO COUNTY AT VARIOUS LOCATIONS IN DISTRICT 06 ON ROUTE 41, 180 CONTRACT NO.: 06-0M8204

Work must be completed within 70 working days
Liquidated Damages are $1,900 per day
Prevailing Wage Rates are Required
Engineer's Estimate: $930,000.00

Emmett's Excavation, Inc. is bidding this project as a Prime Contractor. We are seeking Sub Bids from qualified DBE, MBE, & WBE minority status Subcontractors. There is a 14% DBE participation goal for this project.

We have broken down work items into economically feasible portions to facilitate minority Subcontractor participation. We need Subcontractors for the following items of work:

ALL BID ITEMS, SEE ATTACHED BID LIST

Please contact us if you know any MBE, WBE, or DBE Subcontractor's qualified to perform on the above items of work.

We request all firm's scope letters be faxed to (559) 348-9272 prior to 2:00 pm on Tuesday, August 5, 2014, and all sub-bid proposals be faxed prior to 11:00 am on Wednesday, August 6, 2014.

DO NOT FAX YOUR BID TO US PAST 1:00 PM ON BID DAY. WE CANNOT USE BIDS THAT ARE FAXED TOO LATE!!!

Copies of the Project Plans, Special Provisions, Addendums and other documents may be obtained from:

Department of Transportation
Bidder's Exchange, MS 26
1727 30th Street
Sacramento, CA 95816-7005
(916) 227-6235

You can also arrange to view the Plans and Specifications at our office by appointment only. Should you have any questions regarding the bid or to make an appointment, please contact our office at (559) 347-9188.

Please sign this form to acknowledge receipt and fax back to (559) 348-9272 as a record of contact.

Signature:_____ Position:_____ Company:_____ Date:_____

Thank You,

Kellie Reid, Estimating
EMMETT'S EXCAVATION, INC.
Email. mail@eei78.com

BID ITEM LIST

Item No.	Item Code	Item Description	Unit of Measure	Estimated Quantity
1	070030	LEAD COMPLIANCE PLAN	LS	LUMP SUM
2	120090	CONSTRUCTION AREA SIGNS	LS	LUMP SUM
3	120100	TRAFFIC CONTROL SYSTEM	LS	LUMP SUM
4	120120	TYPE III BARRICADE	EA	24
5	120159	TEMPORARY TRAFFIC STRIPE (PAINT)	LF	120
6	120165	CHANNELIZER (SURFACE MOUNTED)	EA	58
7	128652	PORTABLE CHANGEABLE MESSAGE SIGN (LS)	LS	LUMP SUM
8	129000	TEMPORARY RAILING (TYPE K)	LF	1,020
9	129100	TEMPORARY CRASH CUSHION MODULE	EA	11
10	027614	TEMPORARY CRASH CUSHION (ABSORB 350TL2)	EA	2
11	027615	TEMPORARY CRASH CUSHION (ABSORB 350TL3)	EA	1
12	130100	JOB SITE MANAGEMENT	LS	LUMP SUM
13	130200	PREPARE WATER POLLUTION CONTROL PROGRAM	LS	LUMP SUM
14	130620	TEMPORARY DRAINAGE INLET PROTECTION	EA	1
15	130680	TEMPORARY SILT FENCE	LF	1,150
16	130900	TEMPORARY CONCRETE WASHOUT	LS	LUMP SUM
17	141120	TREATED WOOD WASTE	LB	4,680
18	150661	REMOVE GUARDRAIL	LF	1,110
19	150715	REMOVE THERMOPLASTIC PAVEMENT MARKING	SQFT	140
20	150747	REMOVE ROADSIDE SIGN (STRAP AND SADDLE BRACKET METHOD)	EA	3

Item No.	Item Code	Item Description	Unit of Measure	Estimated Quantity
21	150748	REMOVE ROADSIDE SIGN PANEL	EA	10
22	150771	REMOVE ASPHALT CONCRETE DIKE	LF	1,490
23	150820	REMOVE INLET	EA	1
24	152390	RELOCATE ROADSIDE SIGN	EA	5
25	153130	REMOVE CONCRETE CURB (LF)	LF	450
26	158100	SALVAGE CRASH CUSHION	EA	2
27	160102	CLEARING AND GRUBBING (LS)	LS	LUMP SUM
28	190101	ROADWAY EXCAVATION	CY	180
29	198010	IMPORTED BORROW (CY)	CY	75
30	200052	PRUNE EXISTING PLANTS	LS	LUMP SUM
31	204096	MAINTAIN EXISTING PLANTED AREAS	LS	LUMP SUM
32	205035	WOOD MULCH	CY	670
33	206400	CHECK AND TEST EXISTING IRRIGATION FACILITIES	LS	LUMP SUM
34	206402	OPERATE EXISTING IRRIGATION FACILITIES	LS	LUMP SUM
35	208607	3" PLASTIC PIPE (CLASS 315) (SUPPLY LINE)	LF	60
36	208820	10" WELDED STEEL PIPE CONDUIT	LF	50
37	210010	MOVE-IN/MOVE-OUT (EROSION CONTROL)	EA	2
38	210300	HYDROMULCH	SQFT	8,520
39	210420	STRAW	TON	0.4
40	210430	HYDROSEED	SQFT	8,520

Item No.	Item Code	Item Description	Unit of Measure	Estimated Quantity
41	260203	CLASS 2 AGGREGATE BASE (CY)	CY	75
42	390136	MINOR HOT MIX ASPHALT	TON	270
43	394076	PLACE HOT MIX ASPHALT DIKE (TYPE E)	LF	490
44	394090	PLACE HOT MIX ASPHALT (MISCELLANEOUS AREA)	SQYD	11
45 (F)	510502	MINOR CONCRETE (MINOR STRUCTURE)	CY	3.3
46	560248	FURNISH SINGLE SHEET ALUMINUM SIGN (0.063"-UNFRAMED)	SQFT	42
47	560249	FURNISH SINGLE SHEET ALUMINUM SIGN (0.080"-UNFRAMED)	SQFT	140
48	566011	ROADSIDE SIGN - ONE POST	EA	1
49	568001	INSTALL SIGN (STRAP AND SADDLE BRACKET METHOD)	EA	3
50	568017	INSTALL ROADSIDE SIGN PANEL ON EXISTING POST	EA	10
51	620100	18" ALTERNATIVE PIPE CULVERT	LF	20
52	620140	24" ALTERNATIVE PIPE CULVERT	LF	180
53	650014	18" REINFORCED CONCRETE PIPE	LF	22
54	700637	36" CORRUGATED STEEL PIPE INLET (.064" THICK)	LF	5
55	705315	24" ALTERNATIVE FLARED END SECTION	EA	1
56	721026	ROCK SLOPE PROTECTION (NO. 1, METHOD B) (CY)	CY	8
57	729011	ROCK SLOPE PROTECTION FABRIC (CLASS 8)	SQYD	20
58	730020	MINOR CONCRETE (CURB) (CY)	CY	19
59 (F)	750001	MISCELLANEOUS IRON AND STEEL	LB	1,214
60	027616	CONCRETE BARRIER DELINEATORS	EA	42

Item No.	Item Code	Item Description	Unit of Measure	Estimated Quantity
61	027617	CONCRETE BARRIER MARKERS	EA	25
62	027618	CONCRETE BARRIER TRANSITION CONNECTION	LF	75
63	027619	ALTERNATIVE CRASH CUSHION SYSTEM	EA	5
64	839701	CONCRETE BARRIER (TYPE 60)	LF	770
65	839703	CONCRETE BARRIER (TYPE 60C)	LF	1,010
66	840515	THERMOPLASTIC PAVEMENT MARKING	SQFT	170
67	860090	MAINTAINING EXISTING TRAFFIC MANAGEMENT SYSTEM ELEMENTS DURING CONSTRUCTION	LS	LUMP SUM
68	861088	MODIFY RAMP METERING SYSTEM	LS	LUMP SUM
69	861503	MODIFY LIGHTING	LS	LUMP SUM
70	999990	MOBILIZATION	LS	LUMP SUM

6

INVITATION'S TO BID EMAILED TO DBE, MBE, AND WBE SUBCONTRACTORS

mail@eei78.com

From: <mail@eei78.com>
Date: Tuesday, August 26, 2014 3:55 PM
To: <aabalos@basselectric.net>; <aavila7777@gmail.com>; <admin@adhenvironmental.com>; <AHERA@PACBELL.NET>; <aj@ajvasconi.com>; <alisa@movendirt.com>; <allearthconstruction@gmail.com>; <andelengineering@yahoo.com>; <bennettconst1978@aol.com>; <bids@espls.com>; <blequipment@aol.com>; <brucej@mjavila.com>; <bruceortiz@aol.com>; <burkebid@gmail.com>; <b-w-w@live.com>; <camrock@camrockenvr.com>; <camrocksave@comcast.net>; <cbenites@verizon.net>; <cmtdon@yahoo.com>; <co@costraffic.com>; <contractor@dirtag.com>; <cooks_son@gmail.com>; <cplum@pcnconstructioninc.com>; "David Jordan" <djordan@ccsurveying.net>; <david@safetystriping.com>; <deborah@wtbinc.org>; <deniseddm@yahoo.com>; <dora@unitedtraffic.net>; <dreambuilder.construction@gmail.com>; <eci@lightspeed.net>; "Ed Childress" <edc@klassencorp.com>; <edc@vintagepavingco.com>; <edsafetyinc@yahoo.com>; <email@acdike.com>; <forcetraffic@earthlink.net>; <garryeasley@surewest.net>; "Gary Castro" <garyc@krcsafety.com>; <GOLDENBAYFENCE@YAHOO.COM>; <greenejeans1@att.net>; <hector.castellon@hercatelecomm.com>; <hintoncg@yahoo.com>; <igarcia.nlstrucking@yahoo.com>; <j_camacho@camcosolutions.net>; <jbaez@advgeosolutions.com>; <jcbayline@sbcglobal.net>; <jesmarboring@sbcglobal.net>; <jmoraga@flash.net>; <Joe@jtccorp.com>; <jordan@riojordaninc.com>; <jorge@mercadeco.com>; <josh@superiorhydroseeding.net>; <jtaylor514@earthlink.net>; <jtonyvaldez@hotmail.com>; <karen@imaginmetals.com>; <Kari@rmtlandscape.com>; <kdesena@linkzone.com>; <kedypn@msnavarroeng.com>; <kevinphan@amiandcorp.com>; <leasha5@aol.com>; <lesley@dirtmarket.com>; <mark@triumphgeo.com>; <massx6@hotmail.com>; <mcculloughmacky@aol.com>; <mitchd@alertolite.com>; <MonSLee@yahoo.com>; <moronia@acefencecompany.com>; <msouza61@att.net>; <nish-koinc@comcast.net>; "Nitta Erosion Control" <nittainc@hotmail.com>; <nittaec@gmail.com>; <office@interwestpacific.com>; <parmeter@wildblue.net>; <patriciad@dillardenv.com>; <paving_serna@sbcglobal.net>; <pawilsoninc@gmail.com>; <queenie_chief2003@yahoo.com>; <rambakersfield@yahoo.com>; <randcconstruction@sbcglobal.net>; <rcande@pacbell.net>; <rcervantes@newlandentities.com>; <redwinetest@pprodigy.net>; <ricky@reserrano.com>; <robin@tullygroup.com>; <romenag@jonasinc.com>; <rpendurthi@earmanagement.com>; <samsequipment@comcast.net>; <sdefly@ddge.net>; <sjdinc@att.net>; <suem@gmail.com>; <titusthomas20@yahoo.com>; <toni.medina@att.net>; <tonimf@falconbuildresanddevelopers.com>; <trafficloop@sbcglobal.net>; <trila.grsi@yahoo.com>; <valdez05@gmail.com>; <vapconstructioninc@gmail.com>; <wegrindasphalt@aol.com>
Attach: 06-0M8204 - Addendum No. 5.pdf
Subject: Caltrans Contract No. 06-0M8204 - Revised Bid Date

Good afternoon all,

Please see the attached Addendum No. 5 for Caltrans Contract 06-0M8204 – Revising the Bid Date to Wednesday, September 3, 2014.

Thank you,

Kellie Reid, Estimating
Emmett's Excavation, Inc.

DEPARTMENT OF TRANSPORTATION
DIVISION OF ENGINEERING SERVICES
OFFICE ENGINEER
1727 30th Street MS-43
P.O. BOX 168041
SACRAMENTO, CA 95816-8041
FAX (916) 227-6214
www.dot.ca.gov/hq/esc/oe

Serious Drought.
Help save water!

August 26, 2014

06-Fre-41,180-Var
06-0M8204
Project ID 0600020013
ACHSNHPG-X019(028)E

Addendum No. 5

Dear Contractor:

This addendum is being issued to the contract for CONSTRUCTION ON STATE HIGHWAY IN FRESNO COUNTY AT VARIOUS LOCATIONS.

Submit bids for this work with the understanding and full consideration of this addendum. The revisions declared in this addendum are an essential part of the contract.

This addendum is being issued to change the bid opening to Wednesday, September 3, 2014 instead of Wednesday, August 27, 2014.

To *Bid* book holders:

Inquiries or questions in regard to this addendum must be communicated as a bidder inquiry and must be made as noted in the *Notice to Bidders* section of the *Notice to Bidders and Special Provisions*.

Submit the Bid book as described in the *Electronic Bidding Guide* at the Bidders' Exchange website.

http://www.dot.ca.gov/hq/esc/oe/electronic_bidding/electronic_bidding.html

Inform subcontractors and suppliers as necessary.

This addendum and EBS addendum file are available for the Contractors' download on the Web site:

http://www.dot.ca.gov/hq/esc/oe/project_ads_addenda/06/06-0M8204

If you are not a *Bid* book holder, but request a book to bid on this project, you must comply with the requirements of this letter before submitting your bid.

Sincerely,

MOHSEN SULTAN
Chief, Office of Plans, Specifications & Estimates
Office Engineer
Division of Engineering Services

mail@eei78.com

From: <mail@eei78.com>
Date: Tuesday, August 05, 2014 11:56 AM
To: <aabalos@basselectric.net>; <aavila7777@gmail.com>; <admin@adhenvironmental.com>; <AHERA@PACBELL.NET>; <aj@ajvasconi.com>; <alisa@movendirt.com>; <allearthconstruction@gmail.com>; <andelengineering@yahoo.com>; <bennettconst1978@aol.com>; <bids@espls.com>; <blequipment@aol.com>; <brucej@mjavila.com>; <bruceortiz@aol.com>; <bsalas@bertsalasinc.com>; <burkebid@gmail.com>; <b-w-w@live.com>; <camrock@camrockenvr.com>; <camrocksave@comcast.net>; <cbenites@verizon.net>; <cmtdon@yahoo.com>; <co@costraffic.com>; <contractor@dirtag.com>; <cooks_son@gmail.com>; <cplum@pcnconstructioninc.com>; "David Jordan" <djordan@ccsurveying.net>; <david@safetystriping.com>; <deborah@wtbinc.org>; <deniseddm@yahoo.com>; <dmstb@sbcglobal.net>; <dora@unitedtraffic.net>; <dreambuilder.construction@gmail.com>; <eci@lightspeed.net>; "Ed Childress" <edc@klassencorp.com>; <edc@vintagepavingco.com>; <edsafetyinc@yahoo.com>; <email@acdike.com>; <forcetraffic@earthlink.net>; <garryeasley@surewest.net>; "Gary Castro" <garyc@krcsafety.com>; <ggeneng@aol.com>; <GOLDENBAYFENCE@YAHOO.COM>; <greenejeans1@att.net>; <hector.castellon@hercatelecomm.com>; <hintoncg@yahoo.com>; <igarcia.nlstrucking@yahoo.com>; <j_camacho@camcosolutions.net>; <jbaez@advgeosolutions.com>; <jcbayline@sbcglobal.net>; <jesmarboring@sbcglobal.net>; <jmoraga@flash.net>; <Joe@jtccorp.com>; <jordan@riojordaninc.com>; <jorge@mercadeco.com>; <josh@superiorhydroseeding.net>; <jtaylor514@earthlink.net>; <jtonyvaldez@hotmail.com>; <JVD_INC@yahoo.com>; <karen@imaginmetals.com>; <Kari@rmtlandscape.com>; <kdesena@linkzone.com>; <kedypn@msnavarroeng.com>; <kevinphan@amiandcorp.com>; <leasha5@aol.com>; <lesley@dirtmarket.com>; <lovettexcavating@earthlink.net>; <mark@triumphgeo.com>; <massx6@hotmail.com>; <mcculloughmacky@aol.com>; <mitchd@alertolite.com>; <MonSLee@yahoo.com>; <moronia@acefencecompany.com>; <msouza61@att.net>; <nish-koinc@comcast.net>; "Nitta Erosion Control" <nittainc@hotmail.com>; <nittaec@gmail.com>; <norm@blackstoneasphalt.com>; <office@interwestpacific.com>; <parmeter@wildblue.net>; <patriciad@dillardenv.com>; <paving_serna@sbcglobal.net>; <pawilsoninc@gmail.com>; <queenie_chief2003@yahoo.com>; <rambakersfield@yahoo.com>; <randcconstruction@sbcglobal.net>; <rcande@pacbell.net>; <rcervantes@newlandentities.com>; <redwinetest@pprodigy.net>; <ricky@reserrano.com>; <robin@tullygroup.com>; <romenag@jonasinc.com>; <rpendurthi@earmanagement.com>; <samsequipment@comcast.net>; <sdefly@ddge.net>; <sjdinc@att.net>; <suem@gmail.com>; <titusthomas20@yahoo.com>; <toni.medina@att.net>; <tonimf@falconbuildresanddevelopers.com>; <trafficloop@sbcglobal.net>; <trila.grsi@yahoo.com>; <valdez05@gmail.com>; <van@cpengineering.com>; <vapconstructioninc@gmail.com>; <wegrindasphalt@aol.com>
Attach: 06-0M8204 Revised ITB.pdf
Subject: Revised Invitation to Bid for Caltrans Contract 06-0M8204

Good afternoon all,

Attached is the Revised Invitation to Bid for Caltrans Contract 06-0M8204 with a revised bid date of August 27, 2014 @ 2:00 pm. Feel free to contact me at (559) 347-9188, should you have any questions.

Thank you,

Kellie Reid, Estimating
Emmett's Excavation, Inc.

Emmett's Excavation, Inc.
6207 E. Clinton Ave., Fresno, CA 93727
Tel: (559) 347-9188 Fax: (559) 348-9272
California License # 579845

INVITATION TO BID

DATE: AUGUST 5, 2014

COMPANY:

REVISED

ATTN: Estimator

PHONE #:

FAX #:

FROM: Kellie Reid - Estimating

PAGES: 1 (includes this page)

BID DATE: **AUGUST 27, 2014 @ 2:00 PM**

PROJECT: **CALTRANS**

CONSTRUCTION ON STATE HIGHWAY IN FRESNO COUNTY AT VARIOUS LOCATIONS IN DISTRICT 06 ON ROUTE 41, 180
CONTRACT NO.: 06-0M8204

Work must be completed within 70 working days
Liquidated Damages are $1,900 per day
Prevailing Wage Rates are Required
Engineer's Estimate: $930,000.00

Emmett's Excavation, Inc. is bidding this project as a Prime Contractor. We are seeking Sub Bids from qualified DBE, MBE, & WBE minority status Subcontractors. There is a 14% DBE participation goal for this project.

We have broken down work items into economically feasible portions to facilitate minority Subcontractor participation. We need Subcontractors for the following items of work:

ALL BID ITEMS, SEE ATTACHED BID LIST

Please contact us if you know any MBE, WBE, or DBE Subcontractor's qualified to perform on the above items of work.

We request all firm's scope letters be faxed to (559) 348-9272 prior to 2:00 pm on **Tuesday, August 26, 2014**, and all sub-bid proposals be faxed prior to 11:00 am on **Wednesday, August 27, 2014.**

DO NOT FAX YOUR BID TO US PAST 1:00 PM ON BID DAY. WE CANNOT USE BIDS THAT ARE FAXED TOO LATE!!!

Copies of the Project Plans, Special Provisions, Addendums and other documents may be obtained from:

Department of Transportation
Bidder's Exchange, MS 26
1727 30th Street
Sacramento, CA 95816-7005
(916) 227-6235

You can also arrange to view the Plans and Specifications at our office by appointment only. Should you have any questions regarding the bid or to make an appointment, please contact our office at (559) 347-9188.

Please sign this form to acknowledge receipt and fax back to (559) 348-9272 as a record of contact.

Signature:_____ Position:_____ Company:_____ Date:_____

Thank You,

Kellie Reid, Estimating
EMMETT'S EXCAVATION, INC.
Email. mail@eei78.com

mail@eei78.com

From: <mail@eei78.com>
Date: Thursday, July 10, 2014 1:59 PM
To: <aabalos@basselectric.net>; <aavila7777@gmail.com>; <admin@adhenvironmental.com>; <AHERA@PACBELL.NET>; <aj@ajvasconi.com>; <allearthconstruction@gmail.com>; <andelengineering@yahoo.com>; <bennettconst1978@aol.com>; <bids@espls.com>; <blequipment@aol.com>; <brucej@mjavila.com>; <bruceortiz@aol.com>; <bsalas@bertsalasinc.com>; <burkebid@gmail.com>; <b-w-w@live.com>; <camrock@camrockenvr.com>; <camrocksave@comcast.net>; <cbenites@verizon.net>; <cmtdon@yahoo.com>; <contractor@dirtag.com>; <cooks_son@gmail.com>; <cplum@pcnconstructioninc.com>; <david@safetystriping.com>; <deniseddm@yahoo.com>; <dlconstruction@hotmail.com>; <dreambuilder.construction@gmail.com>; <eci@lightspeed.net>; "Ed Childress" <edc@klassencorp.com>; <edc@vintagepavingco.com>; <edsafetyinc@yahoo.com>; <email@acdike.com>; <forcetraffic@earthlink.net>; <garryeasley@surewest.net>; "Gary Castro" <garyc@krcsafety.com>; <ggeneng@aol.com>; <GOLDENBAYFENCE@YAHOO.COM>; <greenejeans1@att.net>; <hector.castellon@hercatelecomm.com>; <hintoncg@yahoo.com>; <j_camacho@camcosolutions.net>; <jbaez@advgeosolutions.com>; <jcbayline@sbcglobal.net>; <jesmarboring@sbcglobal.net>; <jmoraga@flash.net>; <Joe@jtccorp.com>; <jordan@riojordaninc.com>; <jorge@mercadeco.com>; <josh@superiorhydroseeding.net>; <jtaylor514@earthlink.net>; <jtonyvaldez@hotmail.com>; <JVD_INC@yahoo.com>; <karen@imaginmetals.com>; <Kari@rmtlandscape.com>; <kdesena@linkzone.com>; <kedypn@msnavarroeng.com>; <kevinphan@amiandcorp.com>; <lauren@starbursteng.com>; <leasha5@aol.com>; <lesley@dirtmarket.com>; <lovettexcavating@earthlink.net>; <mark@triumphgeo.com>; <massx6@hotmail.com>; <mcculloughmacky@aol.com>; <michael@safetygeni.com>; <MonSLee@yahoo.com>; <moronia@acefencecompany.com>; <msouza61@att.net>; <nish-koinc@comcast.net>; <nittaec@gmail.com>; <norm@blackstoneasphalt.com>; <office@interwestpacific.com>; <patriciad@dillardenv.com>; <paustin@austin-enterprise.com>; <paving_sema@sbcglobal.net>; <pawilsoninc@gmail.com>; <profconst@aol.com>; <queenie_chief2003@yahoo.com>; <rambakersfield@yahoo.com>; <randcconstruction@sbcglobal.net>; <rcande@pacbell.net>; <rcervantes@newlandentities.com>; <redwinetest@pprodigy.net>; <ricky@reserrano.com>; <robin@tullygroup.com>; <romenag@jonasinc.com>; <rpendurthi@earmanagement.com>; <samsequipment@comcast.net>; <sdefly@ddge.net>; <sjdinc@att.net>; <stephanie@chfence.net>; <suem@gmail.com>; <titusthomas20@yahoo.com>; <toni.medina@att.net>; <tonimf@falconbuildresanddevelopers.com>; <trafficloop@sbcglobal.net>; <trila.grsi@yahoo.com>; <valdez05@gmail.com>; <van@cpengineering.com>; <vapconstructioninc@gmail.com>; <wegrindasphalt@aol.com>
Attach: SKMBT_36314071011000.pdf
Subject: Invitation to Bid - Caltrans Contract 06-0M8204

Good afternoon all,

Attached is the Invitation to Bid for Caltrans Contract 06-0M8204, bidding on August 6, 2014 @ 2:00 pm. Feel free to contact our office at (559) 347-9188, should you have any questions or need further assistance.

Thank you,

Kellie Reid, Estimating
Emmett's Excavation, Inc.

Emmett's Excavation, Inc.
6207 E. Clinton Ave., Fresno, CA 93727
Tel: (559) 347-9188 Fax: (559) 348-9272
California License # 579845

INVITATION TO BID

DATE: July 10, 2014

COMPANY:

ATTN: Estimator

PHONE #:

EMAIL:

FROM: Kellie Reid - Estimating

PAGES: 5 (includes this page)

BID DATE: **August 6, 2014 @ 2:00 PM**

PROJECT: **CALTRANS**

CONSTRUCTION ON STATE HIGHWAY IN FRESNO COUNTY AT VARIOUS LOCATIONS IN DISTRICT 06 ON ROUTE 41, 180
CONTRACT NO.: 06-0M8204

Work must be completed within 70 working days
Liquidated Damages are $1,900 per day
Prevailing Wage Rates are Required
Engineer's Estimate: $930,000.00

Emmett's Excavation, Inc. is bidding this project as a Prime Contractor. We are seeking Sub Bids from qualified DBE, MBE, & WBE minority status Subcontractors. There is a 14% DBE participation goal for this project.

We have broken down work items into economically feasible portions to facilitate minority Subcontractor participation. We need Subcontractors for the following items of work:

ALL BID ITEMS, SEE ATTACHED BID LIST

Please contact us if you know any MBE, WBE, or DBE Subcontractor's qualified to perform on the above items of work.

We request all firm's scope letters be faxed to (559) 348-9272 prior to 2:00 pm on Tuesday, August 5, 2014, and all sub-bid proposals be faxed prior to 11:00 am on Wednesday, August 6, 2014.

DO NOT FAX YOUR BID TO US PAST 1:00 PM ON BID DAY. WE CANNOT USE BIDS THAT ARE FAXED TOO LATE!!!

Copies of the Project Plans, Special Provisions, Addendums and other documents may be obtained from:

Department of Transportation
Bidder's Exchange, MS 26
1727 30th Street
Sacramento, CA 95816-7005
(916) 227-6235

You can also arrange to view the Plans and Specifications at our office by appointment only. Should you have any questions regarding the bid or to make an appointment, please contact our office at (559) 347-9188.

Please sign this form to acknowledge receipt and fax back to (559) 348-9272 as a record of contact.

Signature:_____ Position:_____ Company:_____ Date:_____

Thank You,

Kellie Reid, Estimating
EMMETT'S EXCAVATION, INC.
Email. mail@eei78.com

BID ITEM LIST

Item No.	Item Code	Item Description	Unit of Measure	Estimated Quantity
1	070030	LEAD COMPLIANCE PLAN	LS	LUMP SUM
2	120090	CONSTRUCTION AREA SIGNS	LS	LUMP SUM
3	120100	TRAFFIC CONTROL SYSTEM	LS	LUMP SUM
4	120120	TYPE III BARRICADE	EA	24
5	120159	TEMPORARY TRAFFIC STRIPE (PAINT)	LF	120
6	120165	CHANNELIZER (SURFACE MOUNTED)	EA	58
7	128652	PORTABLE CHANGEABLE MESSAGE SIGN (LS)	LS	LUMP SUM
8	129000	TEMPORARY RAILING (TYPE K)	LF	1,020
9	129100	TEMPORARY CRASH CUSHION MODULE	EA	11
10	027614	TEMPORARY CRASH CUSHION (ABSORB 350TL2)	EA	2
11	027615	TEMPORARY CRASH CUSHION (ABSORB 350TL3)	EA	1
12	130100	JOB SITE MANAGEMENT	LS	LUMP SUM
13	130200	PREPARE WATER POLLUTION CONTROL PROGRAM	LS	LUMP SUM
14	130620	TEMPORARY DRAINAGE INLET PROTECTION	EA	1
15	130680	TEMPORARY SILT FENCE	LF	1,150
16	130900	TEMPORARY CONCRETE WASHOUT	LS	LUMP SUM
17	141120	TREATED WOOD WASTE	LB	4,680
18	150661	REMOVE GUARDRAIL	LF	1,110
19	150715	REMOVE THERMOPLASTIC PAVEMENT MARKING	SQFT	140
20	150747	REMOVE ROADSIDE SIGN (STRAP AND SADDLE BRACKET METHOD)	EA	3

Item No.	Item Code	Item Description	Unit of Measure	Estimated Quantity
21	150748	REMOVE ROADSIDE SIGN PANEL	EA	10
22	150771	REMOVE ASPHALT CONCRETE DIKE	LF	1,490
23	150820	REMOVE INLET	EA	1
24	152390	RELOCATE ROADSIDE SIGN	EA	5
25	153130	REMOVE CONCRETE CURB (LF)	LF	450
26	158100	SALVAGE CRASH CUSHION	EA	2
27	160102	CLEARING AND GRUBBING (LS)	LS	LUMP SUM
28	190101	ROADWAY EXCAVATION	CY	180
29	198010	IMPORTED BORROW (CY)	CY	75
30	200052	PRUNE EXISTING PLANTS	LS	LUMP SUM
31	204096	MAINTAIN EXISTING PLANTED AREAS	LS	LUMP SUM
32	205035	WOOD MULCH	CY	670
33	206400	CHECK AND TEST EXISTING IRRIGATION FACILITIES	LS	LUMP SUM
34	206402	OPERATE EXISTING IRRIGATION FACILITIES	LS	LUMP SUM
35	208607	3" PLASTIC PIPE (CLASS 315) (SUPPLY LINE)	LF	60
36	208820	10" WELDED STEEL PIPE CONDUIT	LF	50
37	210010	MOVE-IN/MOVE-OUT (EROSION CONTROL)	EA	2
38	210300	HYDROMULCH	SQFT	8,520
39	210420	STRAW	TON	0.4
40	210430	HYDROSEED	SQFT	8,520

Item No.	Item Code	Item Description	Unit of Measure	Estimated Quantity
41	260203	CLASS 2 AGGREGATE BASE (CY)	CY	75
42	390136	MINOR HOT MIX ASPHALT	TON	270
43	394076	PLACE HOT MIX ASPHALT DIKE (TYPE E)	LF	490
44	394090	PLACE HOT MIX ASPHALT (MISCELLANEOUS AREA)	SQYD	11
45 (F)	510502	MINOR CONCRETE (MINOR STRUCTURE)	CY	3.3
46	560248	FURNISH SINGLE SHEET ALUMINUM SIGN (0.063"-UNFRAMED)	SQFT	42
47	560249	FURNISH SINGLE SHEET ALUMINUM SIGN (0.080"-UNFRAMED)	SQFT	140
48	566011	ROADSIDE SIGN - ONE POST	EA	1
49	568001	INSTALL SIGN (STRAP AND SADDLE BRACKET METHOD)	EA	3
50	568017	INSTALL ROADSIDE SIGN PANEL ON EXISTING POST	EA	10
51	620100	18" ALTERNATIVE PIPE CULVERT	LF	20
52	620140	24" ALTERNATIVE PIPE CULVERT	LF	180
53	650014	18" REINFORCED CONCRETE PIPE	LF	22
54	700637	36" CORRUGATED STEEL PIPE INLET (.064" THICK)	LF	5
55	705315	24" ALTERNATIVE FLARED END SECTION	EA	1
56	721026	ROCK SLOPE PROTECTION (NO. 1, METHOD B) (CY)	CY	8
57	729011	ROCK SLOPE PROTECTION FABRIC (CLASS 8)	SQYD	20
58	730020	MINOR CONCRETE (CURB) (CY)	CY	19
59 (F)	750001	MISCELLANEOUS IRON AND STEEL	LB	1,214
60	027616	CONCRETE BARRIER DELINEATORS	EA	42

Item No.	Item Code	Item Description	Unit of Measure	Estimated Quantity
61	027617	CONCRETE BARRIER MARKERS	EA	25
62	027618	CONCRETE BARRIER TRANSITION CONNECTION	LF	75
63	027619	ALTERNATIVE CRASH CUSHION SYSTEM	EA	5
64	839701	CONCRETE BARRIER (TYPE 60)	LF	770
65	839703	CONCRETE BARRIER (TYPE 60C)	LF	1,010
66	840515	THERMOPLASTIC PAVEMENT MARKING	SQFT	170
67	860090	MAINTAINING EXISTING TRAFFIC MANAGEMENT SYSTEM ELEMENTS DURING CONSTRUCTION	LS	LUMP SUM
68	861088	MODIFY RAMP METERING SYSTEM	LS	LUMP SUM
69	861503	MODIFY LIGHTING	LS	LUMP SUM
70	999990	MOBILIZATION	LS	LUMP SUM

7

PHONE LOG OF SOLICITATION AND FOLLOW UP CALLS

TO DBE, MBE, AND WBE SUB'S

COMPANY NAME	CONTACT NAME	ADDRESS	PHONE	FAX	E-MAIL	CALL DATE	BIDDING	CERT.	SCOPE
ABSL CONSTRUCTION	LUIS ALLENDE	HAYWARD, CA	510-727-0900	510-727-0912	luis@absiconstruction.com	08/12/14	No	DBE/SMBE	GRINDING/INERTIAL PROFILING
AC DIKE COMPANY	GEORGETTE MCCLAIN	LINCOLN, CA	916-645-7747	916-645-9616	email@acdike.com	08/12/14	No	DBE	GRADING/EXCAVATION
A & P DEVELOPMENT & CONSTRUCTION	PETER OCAMPO	TORRENCE, CA.	310-793-2310	310-793-2312	pocampo@ap-construction.com	08/12/14	No	DBE	TRAFFIC CONTROL
A C DIKE	GEORGETTE MCCLAIN	LINCOLN, CA	916-645-7747	916-645-9618	email@acdike.com	08/12/14	yes	DBE	GRADING, EXCAVATION
A J EXCAVATION	ALISA EMMETT	FRESNO, CA.	559-360-7959	559-354-0639	alisa@movendirt.com	08/12/14	No	DBE	ASPHALT CONCRET
A. J. VASCONI GEN. ENG.	ANDREW J VASCONI	CONCORD, CA	925-691-9400	925-691-3900	aj@ajvasconi.com	08/12/14	No	DBE	ROADWAY EXC., STRUCT. EXC.
ACACIA ENVIRONMENTAL CONST., INC.	JAMES COLBERT	SANTA BARBARA	805-964-2585	805-964-6169	colbert.james@gmail.com	08/12/14	Yes	SBE	EROSION CONTROL
ACE FENCE	MIDA	LA PUENTE, CA.	559-268-1438	559-268-1467	moronia@acefencecompany.com	08/12/14	No	DBE/UDBE	FENCE
ADANTA, INC.	KIMBERLY PATZ	NAPA, CA	707-709-8894	707-736-8368	kimberlypatz@adanta-inc.com	08/12/14	Yes	DBE	LCP
ADH ENVIRONMENTAL	CHAD FALKENBERG	SOQUEL, CA.	831-477-2003	831-477-0895	admin@adhenvironmental.com	08/12/14	No	E/MBE	SWPPP
ADVANCED GEOSOLUTIONS, INC.	JUAN I. BAEZ	LAKE FOREST, CA	310-796-9000	310-796-9001	jbaez@advgeosolutions.com	08/12/14	No	DBE	CLEARING & GRUBBING, EXCAVA.
AHTNA DESIGN-BUILD, INC.	CRAIG O'ROURKE	IRVINE, CA	714-824-3471	714-824-3474	coroarke@ahtna.net	08/12/14	No	DBE	CONST. MGMT/BRIDGES
ALERT-O-LITE TRAFFIC SUPPLY	Mitch	FRESNO, CA.	559-486-4570	559-486-1789	mitchd@alertolite.com	08/12/14	Yes	UDBE	TRAFFIC CONTROL #16345
ALL CTITES ENTERPRISES	JENNIE BREWER	CHINO, CA	909-292-0315			08/12/14	No	DBE	FENCE
ALL EARTH CONSTRUCTION	JED DAVIS	AUBERRY	559-287-7168	559-855-2610	allearthconstruction@gmail.com	08/12/14	No	DBE	EROSION CDNTROL #217
ALL PHASE CONSTR. & ENGINEERING	HEIDI	ROSEVILLE, CA.	916-771-4602	916-771-4603	garryeasley@surewest.net	08/12/14	No	UDBE	GRADING & PAVING
AMLAND STEEL	KEVIN BAO PHAN	SAN FRANSICO, CA.	408-929-3949	408-298-4344	kevinphan@amiandcorp.com	08/12/14	No	DBE	PAVEMENT MARKING
ANDEL ENGINEERING CO.	EDWARD	NEWHALL, CA	661-259-1920	661-259-0511	andelengineering@yahoo.com	08/12/14	No	DBE	SURVEY
ANTHONYS LASER LEVELING	MARY JO AVILA	FRESNO, CA	559-846-7608	559-276-1223	aavila7777@gmail.com	08/12/14	No	DBE	CONST. STAKIN G, ROADWAY EX
APPIAN UDBE SWPPP	THOMAS KOPREK	EL SOBRANTE, CA	510-375-1927	510-227-6004		08/12/14	No	DBE/UDBE	SWPPP
AUSTIN ENTERPRISES	PATTI AUSTIN	BAKERSFIELD, CA.	661-589-1001	661-589-9509	paustin@austin-enterprise.com	08/12/14	No	DBE	SIGNS, SEAL COAT, CONC OVERLAY
BASS ELECTRIC	JEFFERRY YEE	SAN FRANSICO, CA.	415-295-1600	415-856-0381	aabalos@basselectric.net	08/12/14	No	DBE	ELECTRICAL #3321 exp 7-2014
BAY LINE CUTTING & CORING, INC.	JUAN ARREGUIN	BERKELEY, CA	510-527-1000	510-527-0500	jcbayline@sbcglobal.net	08/12/14	No	DBE	MODIFY BRIDGE ITEMS, CONCRETE
BELLAGIO LANDSCAPING	EDWARD CUADROS	SANGER, CA	559-217-8295	559-875-0323	bellagiolands@aol.com	08/12/14	No	DBE	LANDSCAPING / IRRIGATION
BELLOT CONSTRUCTION CORP.		DAKLAND, CA	510-562-4190	510-562-1306		08/12/14	No	DBE	DEMO/FOUNDATION/RESTORATION
BERT W. SALAS, INC.	BOB E. SALAS	SANTEE, CA	619-562-7711	619-258-3515	bsalas@bertsalasinc.com	08/12/14	No	DBE	ROADWAY EX, CONCRETE, REBAR
BIG VALLEY ASPHALT	DONNA WATSON	BAKERSFIELD, CA.	661-861-1363	661-326-8562	donnawatson52@yahoo.com	08/12/14	No	DBE/UDBE	PAVING
BL EQUIPMENT RENTAL & SUPPLIES	BUTCH	VISALIA, CA.	559-827-4592	559-625-5786	blequipment@aol.com	08/12/14	No	UDBE	CONSTRUCTION EQUIPMENT #36494
BURKE CONSTRUCTION	MICHAEL J. BURKE	SHINGLE SPRINGS	530-676-1009	530-672-2411	burkebid@gmail.com	08/12/14	No	DBE	CLEARING & GRUBBING, EXCAVA.
BWW & COMPANY	BOBBY W. WILSON	REDLANDS, CA	909-268-8516	909-435-0392	b-w-w@live.com	08/12/14	No	DBE	DEMO/CONCRETE/SM. STRUCTURES
C & H FENCE AND PATIO	STEPOHANIE	DELANO, CA.	661-725-3600	661-725-3716	stephanie@chfence.net	08/12/14	no	SBE/UDBE	FENCE
CA PROFESSIONAL ELECTRICAL ENG	VAN TAN NGUYEN	LA PUENTE, CA.	626-810-1338	626-810-1322	van@cpengineering.com	08/12/14	No	DBE	PAVEMENT MARKING, SIGNAL LIGHTS
CAL VALLEY CONSTRUCTION, INC.	SHELLY AVILAS	FRESNO, CA	559-274-0300	559-274-0311	shellya@calvalleyconstruction.com	08/12/14	Prime	DBE/WBE	GRADING/PAVING
CALIFORNIA CONSTRUCTION SURVEYING	DAVID JORDAN	El Nido, Ca.	559-779-9474	559-354-0107	djordan@ccsurveying.net	08/12/14	No	DBE	SURVEYING # 39158
CAMACHO COMMUNICATIONS	JULIAN CAMACHO	SACRAMENTO, CA.	916-444-9853	916-447-9853	j_camacho@camcosolutions.net	08/12/14	No	DBE	SIGNAL, LIGHTING, RAMP METERING
CEM BUILDERS	SPENCER	CAMPBELL, CA.	408-395-1490	408-395-1495	lesley@dirtmarket.com	08/12/14	No	UDBE	EXCAVATION/TRUCKING
CLAY MIRANDA TRUCKING, INC.	MICHAEL	FRESNO, CA.	559-275-6250	559-275-6091	cmtdon@yahoo.com	08/12/14	Yes	E/WBE	TRUCKING
CMC TRAFFIC CONTROL SPECIALIST	CRYSTAL MIKS	SAN FRANSICO, CA.	415-206-1700	415-206-1711	suem@gmail.com	08/12/14	No	DBE	TRAFFIC CONTROL
COOKS & SON INC.	CHARLES HENDERSON	SANTA MARIA	805-934-2705	805-937-5473	cooks_son@mail.com	08/12/14	No	DBE	CONC. DIKE/MISC., C & G, RDWY X
C. R. GANN DEMOLITION, INC.	LINDA BROYLES	NUEVO, CA	951-940-0937	951-916-4265	Linda@crganndemolition.com	08/12/14	No	DBE	CLEAR & GRUB/DEMO
D L CONSTRUCTION	DAT LUONG	FRESNO, CA	559-275-8339	559-274-1579	dlconstruction@hotmail.com	08/12/14	No	DBE	CLER/GRUBB/EXCAVATUION
DD-M CRANE & RIGGING	DENISE MAURER	SAN RAFAEL	415-458-1600	415-458-1608	deniseddm@yahoo.com	08/12/14	No	DBE	MODIFY/REMOVE BRIDGE ITEM
DEANA'S EQUIPMENT RENTAL	DIANA	BAKERSFIELD, CA.	661-732-7575	661-948-5588		08/12/14	No	UDBE	EQUIPMENT RENTAL
DIAMOND GENERAL ENGINEERING, INC.	DIANA	WOODLAND, CA.	530-662-2042	530-662-6770	sdefly@ddge.net	08/12/14	No	UDBE	EXCAVATION & PAVING
DILLARD ENVIRONMENTAL SERVICES	PATRICA DILLARD	BYRON, CA.	925-634-6850	925-634-0874	patriciad@dillardenv.com	08/12/14	No	DBE	CLEAR/GRUBB/EXCAVATION
DIRT & AGGREGATE INTERCHANGE, INC.	CHRISTINE	FAIRVEIW, CA.	503-661-5093	503-669-1192	contractor@dirtag.com	08/12/14	No	UDBE	GUARD RAIL/BARRIER
DRAGON MATERIALS TRANSPORT	SUMMER	FRESNO,CA.	559-351-8822	558-233-3666	dmtsb@sbcglobal.net	08/12/14	Yes	UDBE/DBE	TRUCKING #37444
DREAMBUILDER	ANURAG SINGH	PLACENTA, CA.	714-646-3697	714-646-3698	dreambuilder.construction@gmail.com	08/12/14	ND	DBE	ASPHALT CONCRETE
EAGLE ENG. & CONSTRUCTION INC.	CURTIS BROOKS	REDWOOD CITY	650-367-8000	650-367-8282	clbrooks@sbcglobal.net	08/12/14	No	DBE	MESSAGE SIGNS, ELEC,SIGNAL & LIGHT

COMPANY NAME	CONTACT NAME	ADDRESS	PHONE	FAX	E-MAIL	CALL DATE	BIDDING	CERT.	SCOPE
E A R ENVIRONMENTAL ASSESSMENT	MICHELLE CORNING	RIVERSIDE	951-735-5575	951-735-8775	rpendurthi@earmanagment.com	08/12/14	No	DBE	ROW ENG., OEMO, C & G, RDWY X
ED SAFETY SERVICES, INC.	TDM TENER	LODI, CA.	209-333-0807	209-333-5213	edsafetytinc@yahoo.com	08/12/14	no answ	UDBE	TRAFFIC CONTRDL #
EDISON CONSTRUCTION, INC.	JUSTIN/TOM	BAKERSFIELD, CA.	661-366-8111	661+-366-0204	eci@lightspeed.net	08/12/14	No	DBE/MBE/WBE	CLEAR/GRUBB/EXCAVATIDN
E E ELECTRIC, INC.	BADDIEN NGUYEN	SAN JOSE. CA	406-821-1707			08/12/14	No	DBE	ELECTRICAL
ENVIRONMENTAL SERVICE CAMROCK CO.	JDSH	SACRAMENTO, CA.	916-595-9401	916-376-2814	camrocksave@comcast.net	08/12/14	NO	DBE/UDBE	SWPPP #38041
ESPINOZA SURVEYING, INC.	JUAN LOVATD	FRESNO, CA.	559-442-0883	559-442-0884	bids@espls.com	08/12/14	No	DBE/UDBE	SURVEYING # 12505 exp. 4-1-2015
ESWPPP CONSULTANTA	TIM MEHTA	WALNUT CREEK, CA	925-451-1337	925-956-7191	eswppp@hotmail.com	08/12/14	Yes	DBE	LCP, WPCP
FALCON BUILDERS & DEVELOPERS	JDHN FALCDN	FRESND, CA	559-226-1994	559-226-1877	tonimf@falconbuildersand developers.com	08/12/14	No	DBE	CONCRETE/STEEL STRUCTURES
FERREIRA CONSTRUCTION CO., INC.	TDM LYDNS	CHINO, CA	909-606-5900	909-806-7711	fc@ferreiraconstruction.com	08/12/14	NO	DBE	FENCING/MBGR
FLASH TRAFFIC, INC.	RICK VASQUEZ	SANTA CLARITA	661-262-8003	661-262-8099	Nataliejoy86@hotmail.com	08/12/14	Yes	DBE/WBE	TRAFFIC CONTRDL
FORCE TRAFFIC CONTROL, INC.	BILL STEMPLE	EXETER, CA.	559-594-1062	559-594-1056	forcetraffic@earthlink.net	08/12/14	No	UDBE	TRAFFIC CDNTRDL #
FRANK MEDINA GENERAL ENGINEERING	FRANK MEDINA	OROVILLE, CA.	530-743-0744	530-743-9352	toni.medina@att.net	08/12/14	No	DBE	CLEAR/GRUBB/FENCING
GLOBAL ROAD SEALING,INC.	GARDEN GRDVE, CA.	TRI LA	714-893-0845	714-8983-0945	trila.grsi@yahoo.com	08/12/14	NO	DBE	TRAFFIC CONTRDL
GOLDEN BAY FENCE PLUS IRON WORKS	CARDLINE TAIVIT	STOCKTDN, CA.	209-944-9754	209-994-5812	GOLDENBAYFENCE@YAHOO.COM	08/12/14	No	DBE	FENCING, FABRICATED MTL PRDD
HERCA TELECOMM SVCS., INC.	HECTOR CASTELLDN	PERRIS CA	951-940-5941	951-940-5456	hector.castellon@hercatelecomm.com	08/12/14	No	DBE	ELECTRICAL & SIGNALS SUPPLIER
HINTON CONSULTING GROUP	SHAUNA HINTDN	MDNTAGUE, CA.	530-905-2220	530-852-9133	hintoncg@yahoo.com	08/12/14	Yes	SBE/UDBE	WPCP # 37670 exp 5-15-2014
HUNSAKER SAFETY & SIGN , INC. (HSS)	MATT MILLER	FRESND, CA	559-994-2590	559-265-4549	mattm@hunsakersafety.com	08/12/14	Yes	DBE,WBE	TRAFFIC CONTRDL
INTERWEST PACIFIC, LTD	JACK NICKDLAISEN	SDLANA BEACH	858-259-2062	858-345-3737	office@interwestpacific.com	08/12/14	No	DBE	C & G, ROADWAY EX,EXC., DEMO
J & M LAND RESTORATION, INC.	JOHN LUETTE	BAKERSFIELD, CA.	661-872-7039	661-399-8882		08/12/14	No	UDBE/ WMBE	EROSION CONTRDL
JESMAR CONSTRUCTION	JESUS HERNANDEZ	SANTA ANA	714-972-2665	714-972-9331	jesmarboring@sbcglobal.net	08/12/14	No	DBE	C & G, ROADWAY EX,EXC., OEMD
J. MORAGA CONSTRUCTION, INC.	JOSE MDRAGA	MERCED, CA	209-388-9200	209-383-6506	jmoraga@flash.net	08/12/14	No	DBE	CONCRETE AND STRUCTURES
JONAS & ASSOC.	ROMENA JDNAS	MARTINEZ, CA	415-715-8725	415-715-8726	romenaj@jonasinc.com	06/12/14	no answr	DBE	C & G, RDADWAY EX,EXC., OEMD
JVD, INC.	DANIEL/MARIE	FRESNO, CA	559-486-4761	559-486-4761	JVD INC@yahoo.com	08/12/14	no	DBE	CONCRETE GRADING/PAVING
KAYLEN TRAFFIC CONTROL	KAREN	CLOVIS, CA	559-847-9220		karen@imaginationmetals.com	08/12/14	no	DBE	TRAFFIC CONTRDL
KRC SAFETY COMPANY, INC.	CINDY	VISALIA, CA.	559-732-0393	559-732-2684	garyc@krcsafety.com	08/12/14	Yes	DBE/UDBE	TRAFFIC CONTRDL # 000447
LINDY'S COLD PLANING	CINDY TRUMP	LA HABRA, CA	714-720-8289	562-897-2039	wegrindasphalt@aol.com	08/12/14	No	DBE	GROOVE AND GRINO PAVEMENT
LOGANS MARKETING	ELLIS LOGANS	SAN DIEGD, CA	619-233-3766	619-233-3768	AHERA@PACBELL.NET	08/12/14	Yes	BE/SBE	SUPPLIER-ASPHALT/AGGREGATES
LONE STAR LANDSCAPE, INC.	RDBERT SAMANIEGO	SAN MARTIN, CA	406-682-0100	406-662-0109	bob@lonestarland.net	08/12/14	No	DBE	LANDSCAPE
LOVEX GEN. ENG. CORP	LORI R. LDVETT	WRIGHTWOOD, CA	760-249-5426	760-249-6616	lovettexcavating@earthlink.net	08/13/14	No	DBE	CLEARING & GRUBBING, EXCAVA.
M J AVILA COMPANY	MARY JD AVILA	FRESNO, CA	559-846-7601	559-846-7610	brucej@mjavila.com	08/13/14	No	DBE	AGG BASE, ASPHALT, ELECTRICAL
M S LEE ENTERPRISES	MDN SON LEE	CLOVIS, CA	559-217-4851	559-325-0760	MonSLee@yahoo.com	08/13/14	No	DBE	CONSTRUCTIDN AREA SIGNS
M S NAVARRO ENGINEERING	DRQUEOIA NAVARRD	NDRTHRIDGE CA	618-366-7262	816-368-7065	kedypn@msnavarroeng.com	08/13/14	No	DBE	ELECTRICAL
M V CONSTRUCTION	MANUEL VALDEZ	ATWATER, CA	209-756-5936	209-357-0851	valdez05@gmail.com	08/13/14	lft msg.	DBE	RDADWAY EX, CONCRETE, AC
MASS X INC.	JIM LEPPO	CLDVIS, CA	559-472-3274	559-472-3275	massx6@hotmail.com	06/13/14	No	DBE/UDBE	GRADING/PAVING/UG
MC CULLOUGH CONSTRUCTION INC.	MACKY MC CULLOUGH	ARCATA, CA.	707-625-1014	707-825-1769	mcculoughmacky@aol.com	08/13/14	No	DBE	TRAFFIC CDNTRDL
MERCADE CONSTRUCTION	JDRGE MERCADE	TWAIN HARTE, CA	209-566-7722	209-532-7744	jorge@mercadeco.com	08/13/14	No	DBE	FENCING
NEEMA ENGINEERING CDNST., INC.	TYLER	SACRAMENTO, CA.	916-997-6149	916-446-8182	titusthomas20@yhoo.com	08/13/14	No	UDBE	SWPPP & U/G # 31010
NEWLAND ENTITIES, INC.	RDBERT CERVANTES	YABA CITY, CA.	530-755-1176	530-674-0756	rcervantes@newlandentities.com	08/13/14	No	DBE	ASPHAT CONCRETE
NIELSON CONSTRUCTION	DIANN NIELSDN	NAPA, CA	707-253-6774	707-253-0131	dnielsoninc.com	06/13/14	No	DBE	CLEARING/GRUBBING, OEMD, EXC.
NISH-KO, INC.	KAREN	FRESND, CA.	559-275-6653	559-276-5753	nish-koinc@comcast.nst	06/13/14	no	UDBE	LANDSCAPE #9483
NITTA EROSION CONTROL	SCDTT	NITTA	916-652-7459	916-652-4376	nittaec@gmail.com	06/13/14	no	DBE/WMBE	EROSIDN CONTRDL
NLS Trucking	ISSAC GARCIA	SYLMAR, CA.	816-627-6987	818-898-4581	igarcia.nlstrucking@yahoo.com	06/13/14	no	DBE	TRUCKING
NORCAL GENERAL CONSTRUCTION CDRP.	KENNY PHAN	MILPITAS, CA.	406-866-0335	406-969-1650	norcalgeneralconstruction@yahoo.com	06/13/14	no	DBE	ASPHALT CONCRETE
OLIVEIRA FENCE, INC.	DEBBIE GARCIA	SANTA CLARA, CA	406-727-3811	406-727-2690	oliverafence2@yahoo.com	08/13/14	no	UDBE/SDBE	CHAIN LINK FENCING/CABLE RAILING
ORTIZ ASPHALT PAVING INC.	BRUCE ORTIZ	CDLTDN, CA.	909-386-1200	909-386-1288	bruceortiz@aol.com	08/13/14	no	DBE	ASPHALT CONCRETE/PAVING
P A WILSON INC.	PATRICK WIL,SDN	LA MESA, CA	619-303-3551	619-303-3551	pawilsoninc@gmail.com	08/13/14	mail full	DBE	CLEARING/GRUBBING, RDADWAY EX
PARMETER GENERAL ENGINEERS & SERVICES INC.	MARI PARMETER	CAZADARD, CA.	707-832-5074	707-832-5074	parmeter@wildblue.net	08/13/14	no	DBE	TRAFFIC CONTRDL
PC & N CONSTRUCTION, INC.	CHRISTI PLUM	BYRDN, CA.	925-634-4567	925-634-4339	cplum@pcnconstructioninc.com	08/13/14	no	DBE	MBGR/CONC BARRIERS #39218
PELESA INC.	DEBORAH BERMUDEZ	GLENDALE, CA	818-247-5183	816-247-8760	leasha5@aol.com	08/13/14	left msg	DBE	CLEARING & GRUBBING, EXCAVA.
PHIL GREENE	PHIL GRENE	RDYAL OAKS, CA.	831-761-2823	831-761-1829	greenejeans1@att.net	08/13/14	no	DBE	TRAFFIC CONTRDL

COMPANY NAME	CONTACT NAME	ADDRESS	PHONE	FAX	E-MAIL	CALL DATE	BIDDING	CERT.	SCOPE
PROFESSIONAL CONSTRUCTION SERVICES	GEORGE QUINONES	PLEASANT HILL, CA.	925-268-1566	925-268-1355	profconst@aol.com	08/13/14	no	DBVE	CLEAR/GRUBB/EXCAVATION
Q GENERAL ENGINEERING, INC.	SUZY LAPSLEY	CLOVIS, CA	559-325-3685	559-299-6712	qgeneng@aol.com	08/13/14	No	DBE	GRADING/PAVING
R & C CONSTRUCTION	RICHARD GARCIA	FRESNO,CA.	559-255-5655	559-255-5600	randconstruction@sbcglobal.net	08/13/14	No	DBE	CLEAR/GRUBB/EXCAVATION
R E SERRANO INC.	RICKY SERRANO	MARTINEZ, CA	925-957-8184	925-957-8121	email@reserrano.com	08/13/14	No	DBE/MBE	TRAFFIC CONTROL, CONC.,MBB
RAHE ELECTRIC	TIMOTHY RAHE	DOVE CANYON, CA	949-462-4446		raheelectric@yahoo.com	08/13/14	No	DBE/UDBE	ELECTRICAL
RAM CONSTRUCTION & CONCRETE, INC.	DIANNA MNORRIS	BAKERSFIELD, CA.	661-569-4726	661-569-4725	rambakersfield@yahoo.com	08/13/14	No	DBE	TRAFFIC CONTROL
REDWINE-MANLEY TESTING SERVICES, INC.	DENISE TURNER	BAKERSFIELD, CA.	661-633-6993	661-633-3177	redwinetest@pprodigy.net	08/13/14	No	DBE	TRAFFIC CONTROL
RIO JORDAN CONSTRUCTION	JORDAN SOTO	PICO RIVERA, CA.	562-942-0228	688-308-0936	jordan@riojordaninc.com	08/13/14	No	DBE	ASPHALT CONCRETE
RMT LANDSCAPE CONTRACTORS, INC.	KARI TRASK	OAKLAND, CA	510-568-3208	510-568-3766	Kari@rmtlandscape.com	08/13/14	No	DBE/MBE/LBE	LANDSCAPE
RODGERS CONSTR. & ENGINEERING CO., INC.	DAN RODGERS	STOCKTON, CA.	209-464-5780	209-464-5782	rcande@pacbell.net	08/13/14	No		GRADING/PAVING
RUDY'S LANDSCAPE & IRRIGATION DESIGN		BAKERSFIELD, CA.	661-325-3596	861-322-7854		08/13/14	No	DBE/UDBE/SBE	LANDSCAPE
S BENNETT CONSTRUCTION, INC.	JENNY	FILLMORE, CA.	605-524-1056	805-524-1206	bennettconst1978@aol.com	08/13/14	No		
SAFETY STRIPING SERVICE, INC.	DAVE	GOSHEN	559-651-1022	559-651-1119	david@safetystriping.com	08/13/14	Yes	DVBE	STRIPING AND SIGNAGE
SAM'S EQUIPMENT AND SUPPLIES	CHERYL CHAMBERS	FRESNO, CA.	559-252-0354	559-251-1119	samsequipment@comcast.net	06/13/14	Yes	DBE/UDBE	CONSTRUCTION MATERIALS. #
SERNA CONSTRUCTION, INC.	ROBERT SERNA	FRESNO,CA.	559-252-5585	559-252-5124	paving_sema@SBCglobal.net	08/13/14	no		GRADING/PAVIG
SITEWORKS CONSTRUCTIDN, INC.	KENT DESENA	LAFAYETTE, CA	925-284-1437	925-256-8357	kdesena@linkzone.com	08/13/14	no	DBE	CLEARING & GRUBBING, EXC., DEMO
SJD CONSTRUCTION, INC.	SANDRA CUNNINGHAM	OAKDALE, CA	209-847-8939	209-847-0169	sjdinc@att.net	08/13/14	no	DBE	SIGNS, TRAFFIC CONTROL, EXC.
SOLID CONSTRUCTION, INC.	OAN RICH	BAKERSFIELD, CA.	861-201-3627	661-629-1837	queenie_chief2003@yahoo.com	08/13/14	no	DBE	CLEARING & GRUBBING, IRRIG.
SOUZA CONSTRUCTION INC.	MANUEL SOUZA	VISALIA, CA.	559-747-7100	559-747-7101	msouza61@att.net	08/13/14	no	DBE	CLEAR/GRUBB/EXCAVATION
STARBURST ENGINEERING	LAUREN SARIO	EXETER, CA.	559-602-8576	559-592-2845	lauren@starbursteng.com	08/13/14	non	DBE	SAFETY SUPPLIER
STEVE DOVALI CONSTRUCTION, INC.	TIM DOVALI	FRESND, CA	559-255-7603		dovali@dishmail.net	08/13/14	No	DBE	ASPHALT, SEWER MANHOLE, CONC.
SUPERIOR HYDROSEEDING, INC.	JOSH	FREEMAN	631-763-1611	831-763-1409	josh@superiorhydroseeding.net	08/13/14	Yes	DBE/SWBE	EROSION CONTROL
TAYLOR DRILLING	JODY TAYLOR	BAKERSFIELD, CA.	661-979-5537	661-568-3964	jtaylor514@earthlink.net	08/13/14	no	DBE	PIPE
J. TORRES COMPANY, INC.	JOE TORRES	BAKERSFIELD, CA.	681-832-2635	661-632-3980	Joe@jtccorp.com	08/13/14	no	DBE	TRUCKING
TRAFFIC LOOP CRACKFILLING, INC.	LAN NGUYEN	ANAHIEM, CA.	714-520-4026	714-520-4027	trafficloop@sbcglobal.net	06/13/14	NO	DBE/UDBE	TRAFFIC LDOPS # 38033
TRIUMPH GEO SYNTHETICS	MARK PRITCHARD	ANAHIEM, CA.	688-775-7545	714-237-1549	mark@triumphgeo.com	08/13/14	no	DBE	SUPPLIER - MATERIALS #9076
TROY'S CONTRACTING	TROY REESE	SAN FRANSICO, CA.	415-466-9066	415-486-8299		08/13/14	no	DBE	TRAFFIC CONTROL
TULLY CONSULTING GROUP	ROBIN TULLY	DIXON, CA	707-693-1926	707-471-0318	robin@tullygroup.com	06/13/14	yes	DBE/UDBE	SWPPP
UNITED TRAFFIC SERVICES & SUPPLY	DORA PINA	CITY OF INOUSTRY	618-961-5736	818-961-4746	dora@unitedtraffic.net	08/13/14	no	DBE	SIGN STRUCTURES, OEMO,C & G
UNITED SYNERGY CORPORATION DBE USC SUPPLY	EDMOND ROSSOVICH	AUBURN, CA	530-273-1639	530-273-1740	projects@uscsupply.net	08/13/14	Yes	DVBE/SBE	PIPE/EROSION CONTROL MATERIAL
V & G BUILDERS	JERONIMO A. VALDEZ	FRESNO, CA	559-605-9015		jtonyvaldez@hotmail.com	08/13/14	no	DBE	MODIFY/REMOVE BRIDGE ITEM
V A P CONSTRUCTION INC.	ARVINO PRASAD	LA MIRADA, CA	714-253-3270	714-551-9420	vapconstructioninc@gmail.com	08/13/14	no	DBE	CONCRETE BARRIERS/MISC. CONC
VELIS ENGINEERING, INC.	CYNTHIA BENITES	FRESNO, CA	559-676-0029	559-678-3300	cbenites@verizon.net	08/13/14	no	DBE	ROADWAY EX, STRUCT BACKFILL
VINTAGE PAVING COMPANY	EDWARD CARBAHAL	WINTERS, CA	530-795-0132	530-795-5734	edc@vintagepavingco.com	08/13/14	no	DBE	C & G, ROADWAY EX,EXC., DEMO
WATER COMPONENTS & BLDG SUPPLY, INC.	KILEY OLSON	SAN RAFAEL, CA	415-524-8290	415-524-8293		08/13/14	no	DBE/SBE	EROSION CONTROL
WATER TRUCK BROKERS	DEBBIE	FRESNO,CA.	559-651-1335	559-275-1995	deborah@wtbinc.org	08/13/14	no	UDBE/DBE	TRUCKING

8

SUMMARY OF CRITERIA USED FOR SUBCONTRACTOR SELECTION

SUMMARY OF CRITERIA USED FOR MBE, WBE, & DBE SUBCONTRACTOR SELECTION

1. YEARS OF EXPERIENCE PERFORMING THEIR PARTICULAR SCOPE OF WORK.
2. CURRENT CALIFORNIA CONTRACTORS LICENSE.
3. GENERAL LIABLILITY INSURANCE IS CURRENT.
4. WORKMANS COMP INSURANCE IS CURRENT.
5. HAVE THE EQUIPMENT, AND LABOR FORCE NEEDED TO COMPLETE THE WORK.
6. HAS ACCESS TO ANY AND ALL MATERIALS NEEDED TO COMPLETE THE WORK.
7. SENT A CLEAR AND LEDGIBLE BID PROPOSAL.
8. CERTIFIED AS A MINORITY CONTRACTOR.
9. RECENTLY COMPLETED SIMILAR CONTRACTS.
10. BASED WITHIN A REASONABLE DISTANCE FROM THE JOB LOCATION.
11. SCOPE OF WORK COVERS ALL THE PERTAINING WORK NEEDED TO BE DONE.
12. PRICE OF ESTIMATE IS COMPETATIVE, AND WITHIN RANGE OF AVERAGE UNIT PRICES.
13. OVERALL SCOPE AND PRICE GIVES US A COMPETATIVE EDGE OVER OUR COMPETITION.
14. AVAILABILITY TO COMPLETE THE WORK WITHIN THE SCHEDULE REQUIRED.
15. STATUS OF OUR CURRENT WORKING RELATIONSHIP WITH SUBCONTRACTOR.

9

BIDDING INFORMATION PROVIDED TO POTENTIAL SUBCONTRACTORS

BIDDING DOCUMENTS & INFORMATION PROVIDED TO ALL SUBCONTRACTORS

1. ALL PLANS AND SPECIFICATIONS WERE AVAILABLE BOTH ELECTRONICALLY ON-LINE AND FOR VIEW AT OUR OFFICE @ 1477 Menlo AVE, CLOVIS, CA. 93611.
2. PLANS WERE ALSO AVAILABLE FOR VIEW OR PRINTING AT ALL LOCAL BUILDERS EXCHANGE OFFICES.
3. Subcontractors and Suppliers were Directed to Caltrans Website to view current plans and specs on-line. http://caltrans.ca.gov/hq/esc/oe/weekly_ads/index.php

10

LIST OF SUBCONTRACTORS THAT PROVIDED AN ESTIMATE

FAX COVER SHEET

AUSTIN ENTERPRISE

License #764893
PO Box 81926
Bakersfield, CA, 93380
661-589-1001 FAX 589-9509
Certified DBE/MBE/WBE/UDBE
CT #013602

Send to: Emmett's Excavation	**From: Darold**
Attention: Estimating	**Date:** September 2, 2014
Fax number: 559-348-9272	**Phone number: 559-347-9188**

☐ Urgent ☐ Reply ASAP ☐ Please comment ☐ Please review ☐ For your information

Total pages, including cover: 2
Comments

Project: CDOT # 06-OM8204
Hwy 41 & 180, Various Locations in Fresno

Date: September 3, 2014

This transmission may contain confidential and/or privileged information. If you are not the addressee or authorized to receive this for the addressee, you must not use, copy, disclose or take any action based on this message or any information herein. If you have received this transmission in error, please advise the sender immediately by reply and destroy the material in its entirety. Thank you

AUSTIN ENTERPRISE

License #764893
P. O. Box 81926
Bakersfield, CA, 93380
661-589-1001 FAX 589-9509
Certified DBE/MBE/WBE CT-013602
Certified UDBE CT-013602

BID PROPOSAL

Contract: CDOT # 06-0M8204
Route 41 Fresno

Bid Date: September 3, 2014

BID ITEM # 28 / Roadway Excavation [portion]:

1,950 lf Saw cut only.....$3.35 / per lf.....$6,532.50

(6- Locations) 2- move-ons

Conditions for above items:
1. Contractor to supply traffic control as required.
2. Contractor to provide layout and clear access to work area
3. Contractor to provide water source on site, approved slurry disposal site within 10 mile of jobsite and pay all fees
4. Excludes capping of edge drains
5. Two move in included, additional moves at $500.00 each
6. Prior arrangements in writing are required for overtime work other than dictated by closure schedules
7. Contractor to provide lighting and sufficient safety apparatus for protection of our workmen

Note *- Union Signatory,
Insurance $5,000,000.00 liability,
No Bonding

RDV

A. C. DIKE CO.

Specialty Paving Inc.

SPECIALTY PAVING CONTRACTOR

QUOTATION: CDOT FRESNO CO RT 41 06-0M8204

BIDS: 9/3/14

"PLACE ONLY"* 490 LF ASPHALT DIKE TYPE "E" @ $8.65 LF
"PLACE" 11 SQYD MISC AREAS HOT MIX ASPHALT @ $75.00 SQYD

PRICE INCLUDES TACK AND ONE MOBILIZATION.
ASPHALT MATERIAL AND HAULING BY PRIME CONTRACTOR.
TRAFFIC CONTROL BY PRIME CONTRACTOR.

* **PLACE ONLY ASPHALT DIKE. SPECIFICALLY EXCLUDES SURFACE PREPARATION, BACKFILL, OR FOGSEAL.**

QUALIFIED MINORITY CONTRACTOR, DBE/WBE/UDBE # CT 000219
CAL. LIC. # 407417 NEV. LIC. #24188
2788 VENTURE DR. LINCOLN, CA. 95648
(916) 652-0159 FAX (916) 645-9618
WWW.ACDIKE.COM

Nitta Erosion Control

a division of Nitta, Inc.

- HYDROSEEDING
- EROSION CONTROL
- STRAW MULCHING
- PNEUMATIC MULCH SPREADING
- BONDED FIBER MATRIX
- SILT FENCE
- DRILL SEEDING
- FIBER ROLLS / WATTLES
- BLANKETS

STATE LICENSE #401640 • C-27, C-61/D-59

3778 DEL MAR AVENUE • LOOMIS, CA 95650-9051 • PH (916) 652-7459 • FAX (916) 652-4376

nittaec@gmail.com • www.nittainc.net

Bid - Proposal

September 2, 2014 To All General Contractors Requesting Sub-Bids.

Re: Caltrans Project 06-Fre-41,180-Var, Caltrans Contract No. 06-0M8204, Addendum Nos. 1-5, Widen shoulder and construct concrete barrier in Fresno County at various locations. Bid Date: September 3, 2014 (2:00 p.m.).

Certified as DBE #217 (exp. 12/01/15), as WMBE VON #10120139 (exp. 12/28/16) per CPUC Supplier Clearinghouse, and as SBE (Micro) #0011303 (exp. 05/31/16). CCL #401640 C-27, C-61/D-59 (exp. 03/31/15). California Department of Industrial Relations Registration No. 1000000478 (exp. 06/30/15). Quotation is valid for (60) calendar days from bid date and unless quantities, scope of work and/or date of installation change(s). Nitta, Inc. dba Nitta Erosion Control is full signatory member of Local 185 of the Laborers' Union. Most current Laborers' Trust Fund Employer's Contribution Letter is available upon request to verify union membership status.

Item No.	Item	Unit of Measure	Estimated Quantity	Item Price	Total
14	Temporary Drainage Inlet Protection	EA	1	$ 400.00	$ 400.00
15	Temporary Silt Fence	LF	1,150	$ 4.00	$ 4,600.00
37	Move-In/Move-Out (Erosion Control)	EA	2	$1,450.00	$ 2,900.00
38	Hydromulch	SQFT	8,520	$ 0.07	$ 596.40
39	Straw	TON	0.4	$1,547.00	$ 618.80
40	Hydroseed	SQFT	8,520	$ 0.20	$ 1,704.00
	Totals				$ 10,819.20

BID ITEMS MAY BE SEPARATED (EXCEPT FOR #37-#40).

Notes: 1) Total price includes submittals, certified payrolls, standard certificates of insurance, waiver of subrogation (if required), night work, materials, labor, equipment (**air pollution control (CARB PERP- and DOORS-compliant)**), taxes on materials, incidentals and installation as per specifications (unless as otherwise noted).

Please note that Temporary Drainage Inlet Protection and Temporary Silt Fence include installation only, not maintenance or removal. In addition, please note that we have the only patented dust suppression system for pneumatic straw mulching in the country.

2) Total price excludes re-installation of Temporary Drainage Inlet Protection, maintenance and removal of Temporary Drainage Inlet Protection, re-installation of Temporary Silt Fence, maintenance and removal of Temporary Silt Fence, site preparation (trash, debris and weed removal and disposal, removal and disposal of loose rocks larger than 2 ½ inches in maximum dimension unless otherwise authorized), placement of stakes or other suitable markers at the locations designated by the Engineer, re-installation of Hydromulch, coloring agent (already included in the cellulose fiber), re-installation of Straw, straw incorporation, re-installation of Hydroseed, Fiber Rolls, Bonded Fiber Matrix (BFM), rolled erosion control products (RECPs), Silt Fence, night work, **dust control (our straw mulching machines are retrofitted for dust suppression with the "Dust Dog" (United States Patent US 8,550,384 B2 (10/08/13))**, costs of local licenses, permits, fees and/or other taxes, watering, maintenance, pedestrian protection and traffic control.

3) One (1) move-in is included in the total hid price (for Temporary Drainage Inlet Protection and for Temporary Silt Fence). Additional move-ins caused by weather related issues, other delays in work and other conditions out of our control is at $1,600.00 each. Additional move-ins for Hydromulch, Straw and Hydroseed shall be covered under Move-In/Move-Out (Erosion Control). Approximately one (1) working night (weekends and holidays excluded) is required to complete an estimated 1 EA of Temporary Drainage Inlet Protection and an estimated 1,150 LF of Temporary Silt Fence. Approximately one (1) working night(weekends and holidays excluded) is required to complete an estimated 8,520 SQFT of Hydromulch, an estimated 0.4 TON of Straw and an estimated 8,520 SQFT of Hydroseed. Stand-by time will be billed at $390.00 per hour for Temporary Drainage Inlet Protection and Temporary Silt Fence, and at $370.00 per hour for Hydromulch, for Straw and for Hydroseed.

4) Bond premium (performance and payment) rate is 2.5%. Minimum bond premium charge per project is $150.00. Bond premium amount is not included in the bid price. Commercial Liability Insurance does not cover Railroad Protective Insurance, Coverage for "volunteers," Umbrella Liability Limits and/or Excess Liability Limits, Professional Liability, Avian Influenza A (Avian Flu – Absolute), Employment Related Practices, Silica (Absolute), Residential Construction Defect PCO, Construction Wrap-UP/OCIP Exclusion, EIFS & Spray-on Siding, Known Damage or Injury, Biological Contaminants - Mold, Fungus, Micro-Organisms (covered under Pollution policy), Engineers, Architects, or Surveyors Professional Liability, Nuclear Energy Liability, Lead (Absolute), Asbestos (Absolute), Injury to Independent Contractors, Residential Construction Activities (Absolute except Apartments), Condominium Conversion, Beryllium, Advertising Liability and Certified Acts of Terrorism. With the exception that our bid-proposal shall in no event be construed to require indemnification by Subcontractor to a greater extent than permitted under the public policy of the State of California, Subcontractor shall indemnify and save harmless Owner and Contractor only arising out of or in connection with Subcontractor's operations to be performed under this bid-proposal.

5) Terms: Due and payable within 30 days from date of installation and/or as per Business and Professional Code §7108.5 and Public Contract Code §10262.5 (for progress payments) and/or as per Public Contract Code §7107 (for retention due).

6) Attorney fees and interest: If court action be instituted on this invoice, general contractor promises to pay reasonable attorney fees. A late payment charge of 1 1/2% per month will be charged on all invoices not paid within terms of quote. This is annual percentage rate of 18 %.

7) <u>General Contractor to provide and pay for water source at each jobsite location</u> (i.e., fire hydrant with valid water meter and/or water permit, 2,000 gallon capacity water truck, or other approved source at a minimum rate of 200 g.p.m. and/or at a minimum vertical height of 14 feet (for water towers or stands)). We'll require approximately 1,400 gallons of water for an estimated 8,520 SQFT of

Hydromulch and for an estimated 8,520 SQFT of Hydroseed. **If water isn't made available at each jobsite location, this bid-proposal is invalid.**

8) General Contractor to provide good, drivable truck access to each site to be treated with Temporary Drainage Inlet Protection, with Temporary Silt Fence, with Hydromulch, with Straw and with Hydroseed.

9) Final field measured quantities shall be provided by General Contractor and/or Owners' Representative prior to installation of Temporary Drainage Inlet Protection, of Temporary Silt Fence, of Hydromulch, of Straw and of Hydroseed. If final field measurement shall be required of Nitta Erosion Control at jobsite, it shall be performed on a time and material basis with an authorized representative from the General Contractor and Owner in attendance.

Thank you for the opportunity to quote on this project.

Yours truly,

Scott K. Nitta

Scott K. Nitta, President
Nitta Erosion Control

BUSINESS ENTERPRISE CERTIFICATE

NITTA EROSION CONTROL

3778 DEL MAR AVENUE
LOOMIS, CA 95650 9051
Owner: LAURA J BILLS

Business Structure: CORPORATION

STATE MINORITY BUSINESS ENTERPRISE

This Certification Not Valid For Federal Aid Contracts

This certificate acknowledges that said firm is approved by the California Department of Transportation as a State Minority Business Enterprise or State Women Business Enterprise (or in some cases both) in accordance with Assembly Bill Number 486, Chapter 1329 and the California Public Code, Chapter 2.5 (commencing with Section 2050), for the following NAICS codes:

561730 Landscaping Services

* Indicates primary NAICS code

CERTIFYING AGENCY:
DEPARTMENT OF TRANSPORTATION
1823 14TH STREET, MS 79
SACRAMENTO, CA 95814 0000
(916) 324-1700

Firm Number : 217
Renewal Date : December 1, 2015

November 22, 2013

Janice Salais, CERTIFYING AGENCY REPRESENTATIVE

P . N CONSTRUCTION, INC.
General Engineering Contractor Class "A"
State Contractor License No. 771652

Certified Small Business No. 0021507
CERTIFIED DBE/UDBE No. 39218

5301 Byron Hot Springs Road
Byron Hot Springs Road, Byron CA 94514
(925) 634-4567 Fax (925) 634-4339

PRICES ARE GOOD FOR 30 DAYS

We are pleased to submit the following bid:

Contract	06-0M6204
Project	06-Fre-41,180-Var
Federal Aid	ACHSNHPG-X019(028)E
Bid Date	9/3/2014

ITEM NO.	DESCRIPTION	QUANTITY	UNIT PRICE	TOTAL
17	Treated Wood Waste	4680 LB	$ 0.35	$ 1,638.00
18	Remove Guardrail	1110 LF	$ 19.90	$ 22,089.00
26	Salvage Crash Cushion	2 EA	$ 1,480.00	$ 2,960.00
63	Alternative Crash Cushion System	5 EA	$ 16,964.00	$ 84,820.00
			TOTAL	$ 111,507.00

Inclusions:
1. Furnish & Install Per Plans & Specs
2. Tax Included
3. Salvage Weed Mat @ Shields & Shaw Avenue per Section 15-2.03 A (1)
4. One Move In, Additional Move Ins @ $1,300.00 EA
5. Addendum #1 - #5

Exclusions:
1. Permits and Fees (if any)
2. Clearing, Grubbing, Grading, Staking, Backfill, Embankment Widening
3. A. C. or Concrete Patch
4. Traffic Control
5. Layout/Excavation and Concrete Pads for Item #63
6. Removal of Existing Concrete Pads for Item #26
7. Liability for All Un-Marked Underground Utilities

P C & N CONSTRUCTION IS A UNION CONTRACTOR - IRONWORKERS, LABORERS, OPERATING ENGINEERS

P C & N Construction Inc. shall fully indemnify Contractor for any liability arising out of P C & N Construction, Inc. work or products, but only to the extent of P C & N Construction, Inc. liability and not that of anyone else. P C & N Construction, Inc. maintains insurance coverage for their work hereunder, including $2,000,000 Products-Comp/Op Agg and a 11/85 Additional I d Endorsement.

FOUNDATION SPECIFICATIONS:

THE TAU-II CRASH CUSHION SYSTEM HAS BEEN DESIGNED TO ATTACH TO CONCRETE OR ASPHALT FOUNDATIONS. USE THE ANCHORAGE SPECIFIED BELOW DEPENDING ON THE FOUNDATION AT THE JOB SITE. REFERENCE UNIVERSAL TAU-II FOUNDATION DRAWINGS FOR FURTHER DETAIL.

1.) CONCRETE PAD

FOUNDATION: MINIMUM 6 IN. [150 mm] REINFORCED PCC PAD OR 6 IN. [200 mm] NONREINFORCED PCC PAD

ANCHORAGE: 3/4 IN. [20 mm] X 6 1/2 IN. [210 mm] GALVANIZED ANCHOR WITH 6 IN. [150 mm] EMBEDMENT

2.) ASPHALT OVER SUBBASE

FOUNDATION: MINIMUM 6 IN [150 mm] AC OVER 6 IN. [150 mm] COMPACTED DGA SUBBASE

ANCHORAGE: 3/4 IN. [20 mm] X 18 IN. [450 mm] GALVANIZED ANCHORS WITH 16 IN. [410 mm] EMBEDMENT

ASPHALT ANCHORING KIT REQUIRED

3.) ASPHALT ONLY

FOUNDATION: MINIMUM 8 IN. [200 mm] AC

ANCHORAGE: 3/4 IN. [20 mm] X 18 IN. [450 mm] GALVANIZED ANCHORS WITH 16 IN. [410 mm] EMBEDMENT

ASPHALT ANCHORING KIT REQUIRED

4.) ASPHALT OVER P.C. CONCRETE

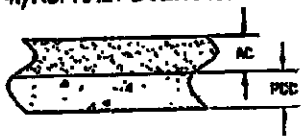

FOUNDATION: AC OVER PCC.

ANCHORAGE: 3/4 IN. [20 mm] GALVANIZED ANCHORS WITH MINIMUM 6 IN. [150 mm] EMBEDMENT IN PCC - ASPHALT ANCHORING KIT NOT REQUIRED
OR
IF 6 IN. [150 mm] EMBEDMENT IN PCC IS NOT POSSIBLE USE
3/4 IN. [20 mm] X 18 IN. [450 mm] GALVANIZED ANCHORS WITH 16 IN. [410 mm] EMBEDMENT - ASPHALT ANCHORING KIT REQUIRED

MATERIAL SPECIFICATIONS

PORTLAND CEMENT CONCRETE (PCC)

STONE AGGREGATE CONCRETE MIX, 4,000 PSI [20 MPa] MINIMUM COMPRESSIVE STRENGTH (SAMPLING PER ASTM C31-34 OR ASTM C42-84A, TESTING PER ASTM C39-84)

ASPHALTIC CONCRETE (AC)

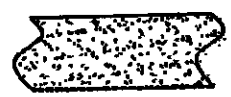

AR-4000 A.C. (PER ASTM D3381 '83) .75" MAXIMUM, MEDIUM (TYPE A OR B) AGGREGATE

SIEVE SIZE	% PASSING
1"	100
3/4"	95-100
3/8"	85-90
No. 4	49-54
No. 8	36-40
No. 30	19-21
No. 200	3-6

COMPACTED SUBBASE (DGA)

6 IN. [150 mm] MINIMUM DEPTH, 95% COMPACTION, CLASS 2 AGGREGATE

SIEVE SIZE	% PASSING
3"	100
2 1/2"	90-100
No. 4	40-60
No. 200	8-20

REV.	CHANGES	DATE	BY	REQ'D	NEXT ASSY.	ITEM
A	SEE ECN 00589	03/02/04	GAD			

SCALE: FULL

	DATE	INIT.
DRAWN BY	01/09/04	GAD
APPR'D BY		JSM

Standard Tolerance
Angular ± 1/2°
Fractional ± 1/10
Dec .XXX= ± .010
Dec .XX= ± .030

TITLE: FOUNDATION SPECIFICATIONS

MODEL	DRAWING NUMBER	REV.
	A040113	A

BARRIER SYSTEMS

3 Ea

NOTES:

1.) REFERENCE UNIVERSAL TAU-II FOUNDATION DIMENSION CHART FOR SPECIFIC SYSTEM FOUNDATION DIMENSIONS.
2.) FOUNDATION MATERIAL, SPECIFICATIONS, AND ANCHORAGE MUST BE IN ACCORDANCE WITH BSI FOUNDATION SPECIFICATIONS FOR A CONCRETE PAD. REFERENCE BSI DRAWING A040113.
3.) THE CONCRETE REINFORCEMENT SHOWN IS RECOMMENDED TO ENSURE ADEQUATE FOUNDATION INTEGRITY FOR PROPER IMPACT PERFORMANCE. VARIATIONS MAY BE REVIEWED AND DETERMINATIONS MADE AS TO EQUIVALENCE BY PROJECT ENGINEER.
4.) ALL REBAR IS #5 [15mm].
5.) IF FOUNDATION EXTENDS FROM A CONCRETE CURB, WALL, ABUTMENT, OR OTHER CONCRETE HAZARD, PLACE BACKSTOP AGAINST THE HAZARD AND SUBTRACT 10" FROM DIMENSION "L".
6.) TORQUE ANCHORS TO 120 FT-LBF [160 N-m].
7.) ANCHORING COMPOUND MUST MEET BSI SPECIFICATIONS.

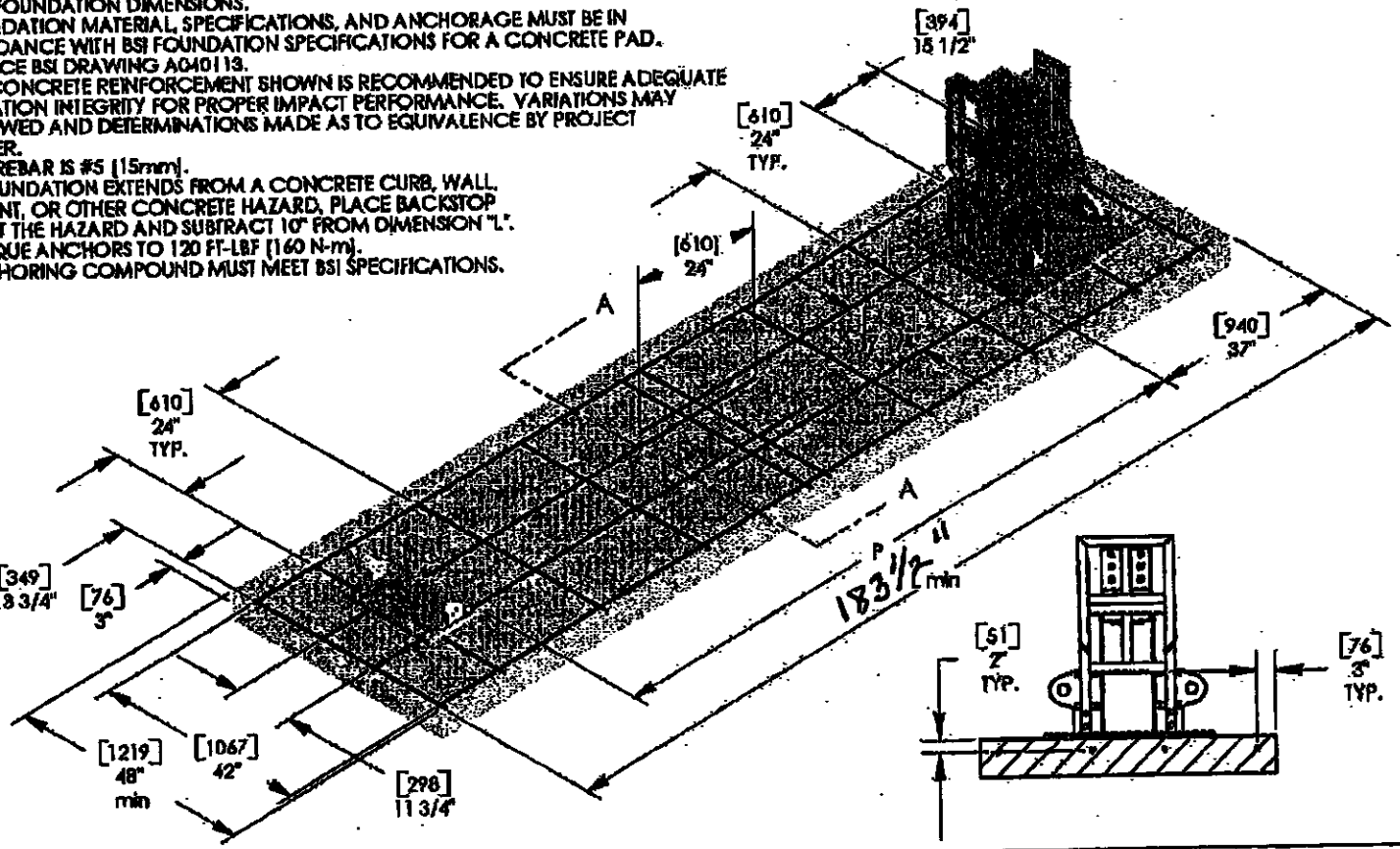

REV.	CHANGES	DATE	BY	REQ'D	NEXT ASSY.	ITEM
				1	8010766	1

SCALE: 1:24

	DATE	INT.
DRAWN BY	8/20/2014	GAD
APPR'D BY		JSM

Standard Tolerance
Angular: +/- 1/2 Deg.
Fractional: +/- 1/16"
Dec.: .XX= +/-.010
Dec.: .XXX= +/-.005

SECTION A-A

TITLE:
UNIVERSAL TAU-II FOUNDATION, COMPACT BACKSTOP

MODEL	DRAWING NUMBER	REV.
	A040102	

NOTES:

1.) REFERENCE UNIVERSAL TAU-II FOUNDATION DIMENSION CHART FOR SPECIFIC SYSTEM FOUNDATION DIMENSIONS.
2.) FOUNDATION MATERIAL, SPECIFICATIONS, AND ANCHORAGE MUST BE IN ACCORDANCE WITH BSI FOUNDATION SPECIFICATIONS FOR A CONCRETE PAD. REFERENCE BSI DRAWING A040113.
3.) THE CONCRETE REINFORCEMENT SHOWN IS RECOMMENDED TO ENSURE ADEQUATE FOUNDATION INTEGRITY FOR PROPER IMPACT PERFORMANCE. VARIATIONS MAY BE REVIEWED AND DETERMINATIONS MADE AS TO EQUIVALENCE BY PROJECT ENGINEER.
4.) ALL REBAR IS #5 [15mm].
5.) IF FOUNDATION EXTENDS FROM A CONCRETE CURB, WALL, ABUTMENT, OR OTHER CONCRETE HAZARD, PLACE BACKSTOP AGAINST THE HAZARD AND SUBTRACT 10" FROM DIMENSION "L".
6.) TORQUE ANCHORS TO 120 FT-LBF [160 N-m].
7.) ANCHORING COMPOUND MUST MEET BSI SPECIFICATIONS.

2 Ea

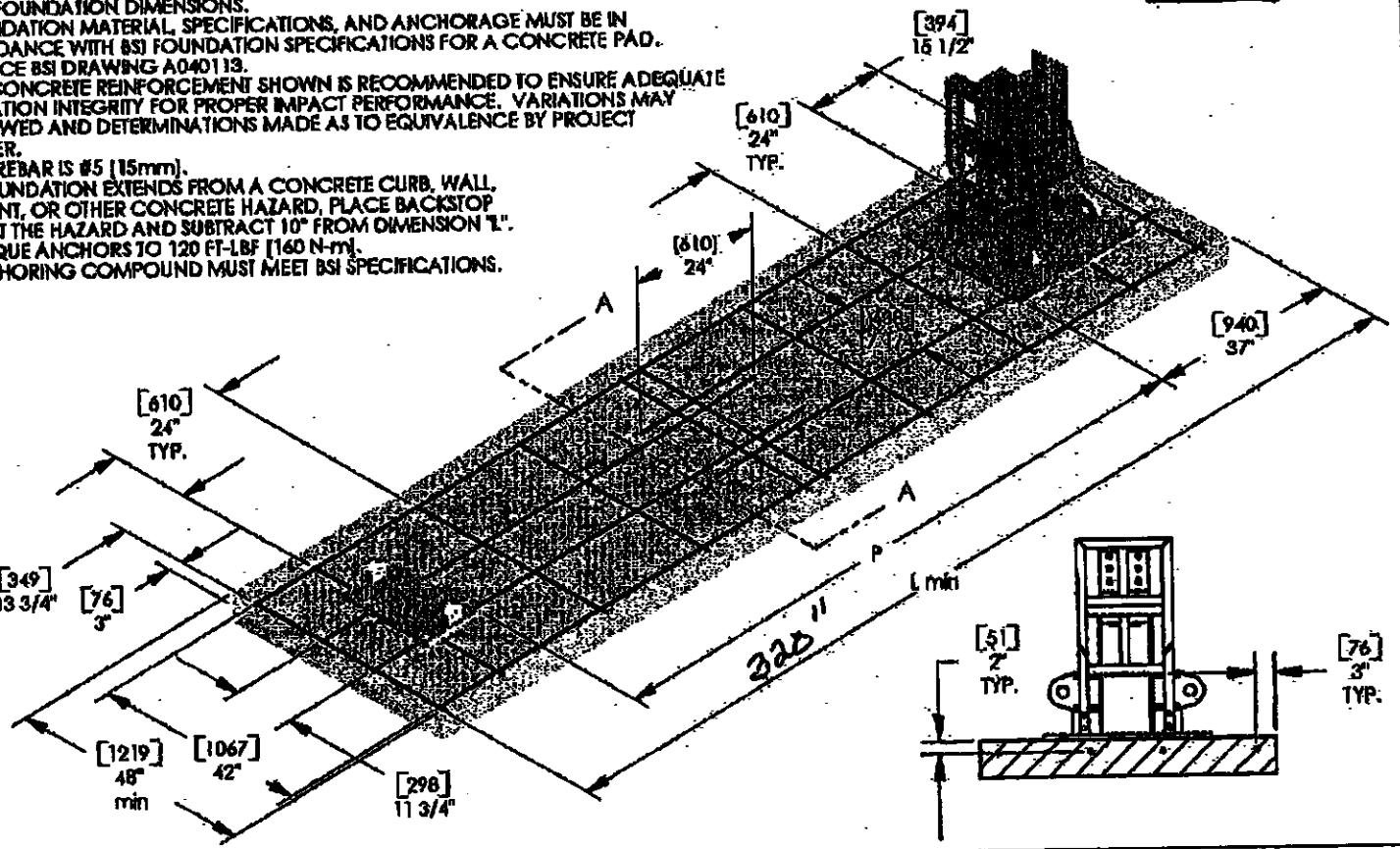

REV.	CHANGES	DATE	BY	REQD	NEXT ASSY.	ITEM
				1	B010708	1

SCALE: 1:24

	DATE	INIT.
DRAWN BY	01/09/14	GAD
APPRD BY		JSH

Standard Tolerance: Angular: +/- 1/2 Deg. Fractional: +/- 1/16. Dec.: XX=+/-.010 Dec.: XX=+/-.030

TITLE: UNIVERSAL TAU-II FOUNDATION, COMPACT BACKSTOP

SECTION A-A

MODEL	DRAWING NUMBER	REV.
	A040102	

CALIFORNIA UNIFIED CERTIFICATION PROGRAM (CUCP)

AGENCY	SAN FRANCISCO BAY AREA RAPID TRANSIT DISTRICT
DEPARTMENT	OFFICE OF CIVIL RIGHTS
ADDRESS	300 LAKESIDE DRIVE, 18TH FLOOR
CITY, STATE ZIP	OAKLAND, CA 94612
PHONE	(510) 464-6884
FAX	(510) 464-7587

December 2, 2010

CHRISTI PLUM
PC&N CONSTRUCTION
5301-F BYRON HOT SPRINGS ROAD
BYRON, CA 94514

Re: DBE Certification

We are pleased to advise you that after careful review of your application and support documentation, the San Francisco Bay Area Rapid Transit District (BART) has determined that your firm meets the eligibility standards to be certified as a Disadvantaged Business Enterprise (DBE) under the U.S. Department of Transportation Regulations 49 CFR Part 26 as amended. Your firm has been added to the California Unified Certification Program (CUCP) database of certified DBE under the specific expertise codes. The Expertise Code(s) for your business is/are:

237310 Highway, Street, Bridge Construction – Metal Beam Rail

Please be advised that your DBE certification status applies only for the above code(s) and any additions, revisions and changes must be submitted to the BART Office of Civil Rights (OCR) for review and approval. Your DBE certification status will be honored by all of the CUCP members.

Your DBE certification is good for five years and must be renewed on December 1, 2015. Our office will notify you, prior to the renewal date, of the documentation required to recertify your firm with BART. DBE certification is subject to review at any time. However, it is your responsibility to notify this office of any change in ownership and/or control, as well as current address and phone number prior to your recertification date.

Should you have any questions, please contact OCR at (510) 464-6103

Sincerely,

Ron A. Granada
Sr. Civil Rights Officer

CALIFORNIA UNIFIED CERTIFICATION PROGRAM
DISADVANTAGED BUSINESS ENTERPRISE CERTIFICATE

PC&N CONSTRUCTION, INC

5301-F BYRON HOT SPRINGS ROAD
BYRON, CA 94514

Owner: CHRISTI PLUM
Business Structure: CORPORATION

This certificate acknowledges that said firm is approved by the California Unified Certification Program (CUCP) as a Disadvantaged Business Enterprise (DBE) as defined by the U.S. Department of Transportation (DOT) CFR 49 Part 26, as may be amended, for the following NAICS codes:

NAICS Code(s) * Indicates primary NAICS code

* 237310 Highway, Street, and Bridge Construction

Work Category Code(s)

C0683 GUARD RAILINGS & BARRIERS

C8320 METAL BEAM GUARD RAILING

Licenses

A General Engineering Contractor

CERTIFYING AGENCY:
BAY AREA RAPID TRANSIT DISTRICT (BART)
300 LAKESIDE DRIVE, 18TH FLOOR
OAKLAND, CA 94612 0000
(510) 464-6195

UCP Firm Number 39218

Kelley Smith
CUCP OFFICER

February 13, 2012

Airport * Highway * Street * Parking Lot * Striping * Pavement Markings * Markers * Thermoplastic * Signs * Sealcoat * Crackfill

CA LIC. # 396627, CLASS C-32 - MBE/SBE/ UDBE #2003

CORPORATE OFFICE: 310 A STREET, P.O. BOX 755 FILLMORE, CA 93016
SATELLITE OFFICE: 151 AIRPORT ROAD, KING CITY, CA 93930
PH: (805) 524-7345 / FAX: (805) 524-7428

ESTIMATE

COMPANY: ATTN:
PHONE: FAX: EMAIL:
JOB NAME: **CALTRANS 06-0M8204 - CONSTRUCTION ON ROUTES 41 & 180**
ADDRESS: **VARIOUS LOCATIONS** CITY : FRESNO, CA
PLANS: YES SPECS: YES
ESTIMATOR : TREVOR EMAIL: trevor@supersealandstripe.com

BID DATE	ACCEPTANCE	START DATE	COMPLETION DATE
9/3/14			

ITEM #	DESCRIPTION	QTY	U/M	U.C.	TOTAL
	REMOVE BY GRINDING AND APPLY PAINT & THERMOPLASTIC				
1	LEAD COMPLIANCE PLAN (PARTIAL - FOR OUR WORK ONLY)	1	LS	$800.00	$800.00
5	TEMPORARY TRAFFIC STRIPE (PAINT)	120	LF	$1.00	$120.00
19	REMOVE THERMOPLASTIC PAVEMENT MARKING	140	SF	$2.50	$350.00
66	THERMOPLASTIC PAVEMENT MARKING	170	SF	$6.00	$1,020.00
70	MOBILIZATION	1	LS	$8,000.00	$8,000.00
	THIS PROPOSAL EXCLUDES THE FOLLOWING:				
	CONSTRUCTION AREA SIGNAGE				
	DETOUR SIGNAGE / RAMP CLOSURE ADVANCED NOTICE SIGNS				
	POSTING OF TEMPORARY NO PARKING SIGNS				
	SIGNAGE				
	MESSAGE BOARDS				
	HAZARDOUS MATERIAL REMOVAL AND DISPOSAL				
	TRAFFIC CONTROL				
	SURFACE PREP PRIOR TO STRIPING				
	REMOVAL OF CURING COMPOUND				
	BASED ON ONE MOVE-IN. ADDITIONAL MOVE- INS @ $4,000/EA				
	CONTRACTOR IS TO PROVIDE AN ON-SITE LOCATION TO STOCKPILE REMOVAL DEBRIS AND PAY ALL ASSOCIATED COSTS/FEES FOR HAUL-OFF AND DISPOSAL.				
	PRICE COVERS LISTED ITEMS ONLY.				
	DOWN TIME CAUSED BY ANYTHING BEYOND THE CONTROL OF SUPER SEAL AND STRIPE WILL BE BILLED AT $125/MAN HOUR				
	ALL ITEMS MUST BE USED FOR A VALID PROPOSAL. REMOVAL OF ITEMS FROM THIS PROPOSAL WILL NOT BE ACCEPTED.				
	INCLUDES LAYOUT ON THE SAME DAY AS STRIPING. IF LAYOUT IS REQUIRED ON DAYS PRIOR TO INSTALLATION, AN ADDITIONAL MOBILIZATION WILL BE BILLED.				
	IF A LEAD AWARENESS CLASS IS REQUIRED BY THE STATE, AN ADDITIONAL CHARGE OF $1,000 WILL BE BILLED. THE CLASS WILL BE HELD AT OUR OFFICE IN FILLMORE, CA.				
	PRICE DOES NOT INCLUDE PREMIUM FOR SATURDAY OR SUNDAY WORK HOURS				
	CALL TIM TANNER FOR SCHEDULING - (805) 432-3620	PAGE 1 OF 3		TOTAL	$10,290.00

A CONTRACT AND FIFTEEN (15) WORKING DAY'S NOTICE MUST BE GIVEN PRIOR TO STARTING WORK.
UPON ACCEPTANCE PLEASE SIGN AND RETURN. ABOVE PRICE NOT VALID AFTER 30 DAYS.

Airport * Highway * Street * Parking Lot * Striping * Pavement Markings * Markers * Thermoplastic * Signs * Sealcoat * Crackfill

CA LIC. # 396627, CLASS C-32 - MBE/SBE/ UDBE #2003

310 A STREET, P.O. BOX 755 FILLMORE, CA 93016
PH: (805) 524-7345 / FAX: (805) 524-7428

GENERAL LIABILITY INSURANCE IS INCLUDED WITH LIMITS OF $1,000,000 PER OCCURRENCE/$2,000,000 GENERAL AGGREGATE/ $2,000,000 COMPLETED OPERATIONS AGGREGATE AND BLANKET ADDITIONAL INSURED ENDORSEMENT WITH WORDING EQUIVALENT TO GC2010 11-85 WHEN REQUIRED BY WRITTEN CONTRACT. TYPE 3 INDEMITY AGREEMENT APPLIES. EXCLUDES ANY WAIVER SUBROGATIONS ON WORKERS COMP. SEE NEXT PAGE OF THIS PROPOSAL FOR SPECIMEN INSURANCE CERT.

CLARIFICATIONS:

1. Contractor to provide monthly progress payments for all completed work in accordance with the bid pricing schedule. Monthly progress payments must be received in full by Super Seal & Stripe no later than 10 calendar days after the Contractor receives payment from Owner for our completed work. Delinquent payments will be subject to the highest interest rate allowed by law.
2. Retainage percentage on monthly progress payments to be no greater than the percentage retained by the Owner on its payment to the Contractor. If Owner reduces the retainage percentages on payments to the Contractor, the Contractor shall likewise reduce the retainage percentage on payment to Super Seal & Stripe. Full retention to be released no later than thirty, (30) days after completion of Super Seal & Stripe's work. Excessive or deliquent retainage will be subject to the highest interest rate allowed by law.
3. Any required Testing, Engineering, Design, Permits, Licenses or Applications, and the like, to be provided by others.
4. Prices are based on Plans & Specifications available at bid time, including all addenda. Any request for work (post bid) under conditions differing from those represented by the Prime Contract Documents, including but not limited to; altered phasing or staging, design changes, modified layout, resulting from plan errors or inaccurate designs, will require payment for additional work to be made to Super Seal & Stripe at an amount agreed upon prior to performing this work. If an amount cannot be agreed upon prior to performing the additional work the amount will be determined using Caltrans Force Account Rates or unit prices established in the bid pricing schedule, or a combination thereof; established in the bid pricing schedule, or a combination thereof; whichever method results in a higher overall payment.
5. Super Seal & Stripe is not responsible for delays caused by and or resulting from activities or non activities of others, including but not limited to, Owner, Contractor, Vendors, Suppliers, other subcontractors and other factors not in direct control of Super Seal & Stripe. For the delays caused by the aforementioned, Super Seal & Stripe will be reimbursed for all direct and indirect costs plus a mark up of forty percent, (40%) or as specified and allowed by the Prime Contract if the delays are caused by the Owner. Super Seal & Stripe will be granted an extension of time to perform its work tantamount to the delays.
6. Super Seal & Stripe requires (15) days notice prior to commencement of any production activity. If any of Super Seal & Stripe's work will be a controlling operation on the critical path of this project, Super Seal & Stripe must be notified in writing prior to execution of the Subcontract Agreement and provided with a CPM schedule which details this work. Failure to provide this information will waive the Contractor's right to recover liquidated damages from Super Seal & Stripe for this work.
7. All changes to the original scope of work proposed extra work must be directed by the Contractor in writing prior to Super Seal & Stripe performing this work.
8. For the purpose of this Subcontract Quotation one (1) move-in is considered to be: a period of consecutive eight (8) hour days of continuous work, not including weekends and holidays. Any discontinuities in this period, other than weekends and holidays, or for our own convenience, will be charged as an additional move-in at the Additional Move-in Charge as quoted herein.
9. Super Seal & Stripe must receive a letter of intent to award us the subcontract no later than (20) calendar days after bid date or this Subcontract Quotation becomes null and void.
10. Super Seal & Stripe is an Equal Opportunity and Affirmative Action employer, that adheres to laws & regulations of Executive order 11246 Sec. 503 as amended of Rehabilitation action 1973 as amended and 4211 (USC) Vietnam Veterans readjustment as amended.
11. If General Contractor or any of its sub-contractors work within Super Seal & Stripes traffic control, the expense will be shared accordinly at Super Seal & Stripe discretion. No advance posting, signing, or Portable CMS is included for Super Seal & Stripe Traffic Control.
12. Pre-Striping pavement preparation, including sweeping & curing compound removals, to be provided by others.
13. Any additional work in excess of the quantities price will be billed at the units. No discounts given for under-runs without prior approval of Super Seal & Stripe.
14. Upon acceptance of this proposal, all terms, conditions and exclusions on all pages of this proposal shall be incorporated into the contract as an addendum.

THIS PROPOSAL EXCLUDES BOND COSTS.

ACORD®

CERTIFICATE OF LIABILITY INSURANCE

THIS CERTIFICATE IS ISSUED AS A MATTER OF INFORMATION ONLY AND CONFERS NO RIGHTS UPON THE CERTIFICATE HOLDER. THIS CERTIFICATE DOES NOT AFFIRMATIVELY OR NEGATIVELY AMEND, EXTEND OR ALTER THE COVERAGE AFFORDED BY THE POLICIES BELOW. THIS CERTIFICATE OF INSURANCE DOES NOT CONSTITUTE A CONTRACT BETWEEN THE ISSUING INSURER(S), AUTHORIZED REPRESENTATIVE OR PRODUCER, AND THE CERTIFICATE HOLDER.

IMPORTANT: If the certificate holder is an ADDITIONAL INSURED, the policy(ies) must be endorsed. If SUBROGATION IS WAIVED, subject to the terms and conditions of the policy, certain policies may require an endorsement. A statement on this certificate does not confer rights to the certificate holder in lieu of such endorsement(s).

PRODUCER Tolman & Wiker Insurance Services LLC #0E52073 196 S. Fir Street PO Box 1388 Ventura CA 93002-1388	CONTACT NAME: Elena Amaro PHONE (A/C, No, Ext): (805) 585-6736 FAX (A/C, No): (805) 585-6836 E-MAIL ADDRESS: eamaro@tolmanandwiker.com
INSURED Super Seal & Stripe, Inc P.O. Box 755 Fillmore CA 93016	INSURER(S) AFFORDING COVERAGE — NAIC # INSURER A: Travelers Indemnity Co of CT — 25682 INSURER B: Travelers Prop Cas Co of Amer — 025674 INSURER C: INSURER D: INSURER E: INSURER F:

COVERAGES CERTIFICATE NUMBER: 14/15 GL/AU/UMB/WC - REVISION NUMBER:

THIS IS TO CERTIFY THAT THE POLICIES OF INSURANCE LISTED BELOW HAVE BEEN ISSUED TO THE INSURED NAMED ABOVE FOR THE POLICY PERIOD INDICATED. NOTWITHSTANDING ANY REQUIREMENT, TERM OR CONDITION OF ANY CONTRACT OR OTHER DOCUMENT WITH RESPECT TO WHICH THIS CERTIFICATE MAY BE ISSUED OR MAY PERTAIN, THE INSURANCE AFFORDED BY THE POLICIES DESCRIBED HEREIN IS SUBJECT TO ALL THE TERMS, EXCLUSIONS AND CONDITIONS OF SUCH POLICIES. LIMITS SHOWN MAY HAVE BEEN REDUCED BY PAID CLAIMS.

INSR LTR	TYPE OF INSURANCE	ADDL INSR	SUBR WVD	POLICY NUMBER	POLICY EFF (MM/DD/YYYY)	POLICY EXP (MM/DD/YYYY)	LIMITS	
A	GENERAL LIABILITY X COMMERCIAL GENERAL LIABILITY CLAIMS-MADE X OCCUR GEN'L AGGREGATE LIMIT APPLIES PER: POLICY X PRO-JECT LOC			DT22-CO-93248327-TCT-14 Excludes all Wrap/OCIP Projects	3/1/2014	3/1/2015	EACH OCCURRENCE DAMAGE TO RENTED PREMISES (Ea occurrence) MED EXP (Any one person) PERSONAL & ADV INJURY GENERAL AGGREGATE PRODUCTS - COMP/OP AGG	$ 1,000,000 $ 300,000 $ 5,000 $ 1,000,000 $ 2,000,000 $ 2,000,000
A	AUTOMOBILE LIABILITY X ANY AUTO ALL OWNED AUTOS SCHEDULED AUTOS X HIRED AUTOS X NON-OWNED AUTOS			DT-810-9324B327-TCT-14	3/1/2014	3/1/2015	COMBINED SINGLE LIMIT (Ea accident) BODILY INJURY (Per person) BODILY INJURY (Per accident) PROPERTY DAMAGE (Per accident) Medical payments	$ 1,000,000 $ $ $ $
B	X UMBRELLA LIAB X OCCUR EXCESS LIAB CLAIMS-MADE DED RETENTION $			DTSM-CUP-93248327-TIL-14	3/1/2014	3/1/2015	EACH OCCURRENCE AGGREGATE	$ 1,000,000 $ 1,000,000 $
B	WORKERS COMPENSATION AND EMPLOYERS' LIABILITY ANY PROPRIETOR/PARTNER/EXECUTIVE OFFICER/MEMBER EXCLUDED? (Mandatory in NH) Y/N N/A If yes, describe under DESCRIPTION OF OPERATIONS below			DTJUB-9324B315-14	1/1/2014	1/1/2015	X WC STATU-TORY LIMITS OTH-ER E.L. EACH ACCIDENT E.L. DISEASE - EA EMPLOYEE E.L. DISEASE - POLICY LIMIT	$ 1,000,000 $ 1,000,000 $ 1,000,000

DESCRIPTION OF OPERATIONS / LOCATIONS / VEHICLES (Attach ACORD 101, Additional Remarks Schedule, if more space is required)
GL: CGD3910307 - Exclusion - All Projects Subject to a Wrap-Up Insurance Program with Limited Exceptions for Certain Ongoing Operations; CGD2460805 - Blanket Additional Insured (Contractors) (Primary); CGD3610305 - Additional Insured - Owners, Lessees or Contractors - Scheduled Person or Organization; CGD3160704 - Contractos Xtend Endorsement (WOS); CGD2110104 - Designated Project(s) General Aggregate Limit
AUTO: CAT3530310 - Blanket A/I, Blanket WOS; CA00010310 - Primary
WC: WC990376A001 - Blanket WOS

CERTIFICATE HOLDER

SPECIMEN

CANCELLATION

SHOULD ANY OF THE ABOVE DESCRIBED POLICIES BE CANCELLED BEFORE THE EXPIRATION DATE THEREOF, NOTICE WILL BE DELIVERED IN ACCORDANCE WITH THE POLICY PROVISIONS.

AUTHORIZED REPRESENTATIVE

Mark Lyon/EBB/I

SPECIMEN

© 1988-2010 ACORD CORPORATION. All rights reserved.
The ACORD name and logo are registered marks of ACORD

TCG

Civil Engineering and Stormwater Solutions

Aug 26, 2014

RE: Proposal for WPCP for Caltrans 06-0M8204, bidding 8/27/14

Dear Prime Contractor,

Thank you for the opportunity to provide a proposal for this project. We provide civil engineering and stormwater management services.

Scope of Work:

A. Prepare Water Pollution Control Program (WPCP)

Prepare a Water Pollution Control Program (WPCP). The document will be prepared in accordance with State and local requirements. Water Pollution Control Drawings will be included. Exclusions: Required BMP's, monitoring, site inspection and testing will be the contractor's responsibility.

Fee:

The WPCP will be prepared for a Fixed Fee of the following, with fees billed monthly based upon percent completion:

A. Prepare WPCP $650 $ 650.00

Fees will be due within 30 days of client's receipt of invoice.

Timing and deliverables:

The WPCP will be provided within 1 week of receipt of authorization to proceed. The document will be provided in hard copy (4 copies) and electronic PDF format.

We appreciate the opportunity to present this proposal and if you have any questions please feel free to contact me at (707) 628-4219. If this proposal is acceptable, please sign below authorizing us to begin work and return via fax to (707) 471-0318.

Sincerely,

Robin Tully

Robin Tully, PE/QSD/QSP, President/Owner
License #: C64354

AUTHORIZATION TO PROCEED

Name: _____ Date: _____

DBE/WBE/UDBE #38300, Exp. 2/4/2015, SBE (Micro) #60919, Exp. 1/31/2016

TULLY CONSULTING GROUP
180 S. FIRST ST, SUITE 9 • DIXON, CA • 95620
PHONE: 707-693-1926 • FAX 707-471-0318
ROBIN@TULLYGROUP.COM

Clay Miranda Trucking, Inc.
DBE & WBE
3220 W. BELMONT AVE.
FRESNO, CA. 93722
BUS:(559) 275-6250
FAX: (559) 275-6091

Project:	DOT Widen Shoulder And Construct Concrete Barrier
Contract :	06-Fre-41, 180-Var
Loc:	Various
	Bid Date: 9-3-14

Add 5% Increase On All Truck Hauls

0-0-0

All Single Loads Are Hourly.

STAND-BY AFTER

SPRS. & BTMS. 10 MIN.
TRANSFERS 30 MIN.
ROCK PLANT 10 MIN.
HOT PLANT 10 MIN.

ALL BIDS ARE BASED ON AMERICAN TONS
MINIMUM 25.00 TON LOADS

(Price is based on fuel cost not exceeding $ 4.00 per gal. For every .25 increase in fuel cost, add 2.5 % to quote.)

POINT OF ORIGIN	MATERIAL	Hourly Rate	BOTTOMS	SUPERS	TRANSFERS	SEMI ENDS	DELIVERY AREA
Various	AC/AB		95.00	95.00	95.00	100.00	Various

BY: Mike Miranda DATE:

CALIFORNIA UNIFIED CERTIFICATION PROGRAM
DISADVANTAGED BUSINESS ENTERPRISE CERTIFICATE

CLAY MIRANDA TRUCKING, INC.

3220 W. BELMONT
FRESNO, CA 93722

Owner: DEBORA COOPER

Business Structure: CORPORATION

This certificate acknowledges that said firm is approved by the California Unified Certification Program (CUCP) as a Disadvantaged Business Enterprise (DBE) as defined by the U.S. Department of Transportation (DOT) CFR 49 Part 26, as may be amended, for the following NAICS codes:

NAICS Code(s) * Indicates primary NAICS code

* 484110 General Freight Trucking, Local
484220 Specialized Freight (except Used Goods) Trucking, Local
423320 Brick, Stone, and Related Construction Material Merchant Wholesaler

Work Category Code(s)

C0625	SAND & GRAVEL	C9602	BOTTOM DUMP TRUCKING
C9605	FLAT BED TRUCKING	C9670	TRUCK RENTAL
C9771	TRUCK BROKER	C9774	TRUCKER

Licenses

CERTIFYING AGENCY:
CITY OF FRESNO
2101 G STREET, BUILDING A
FRESNO, CA 93706 0000
(559) 621-1182

UCP Firm Number : 5568

Beth McDonell
CUCP OFFICER

February 7, 2011

[redacted]
National Strength. Local Service.
Lic. #C50-[redacted]

Harris Rebar Northern California Inc.
1384 N. Jackson Ave. Ph (559) 251-7363
Fresno, CA 93703 Fax (559) 251-0435

Proposal No: **45139**
Proposal Date: **9/3/2014**

This proposal is valid for 30 days from date shown above.

BID PROPOSAL

SECTION I- GENERAL INFORMATION

Proposal to: **Bidding Contractors**
Attn: **Estimating Department**
Project Name: **06-0M8204 Barrier Rail**
Ref. No.:
Address: **Fresno, CA**
Drwgs Quoted: **Drawings Dated 7/13/14 (As Listed on Sheet 1)**
Specs: **Yes**
Addendums: **1, 2, 3, 4, 5**

SECTION II- SCOPE OF WORK

- **Reinforcing Steel Supplied F.O.B. Truck Jobsite - Drilled & Grouted Dowels**
- **Reinforcing Steel Supplied "Caged" F.O.B. Truck Jobsite - Light Pole Cages**
- **Remaining Reinforcing Steel Furnished & Installed**

SECTION III- PRICES

NOTE: Taxes are INCLUDED in prices shown.

Bid Item	Description	Qty	Unit	Unit Price	Total
62	Concrete Barrier Transition Connection	75	LF	$43.00	$3,225.00
64	Concrete Barrier (Type 60)	770	LF	$10.17	$7,830.90
65	Concrete Barrier (Type 60C)	1,010	LF	$25.32	$25,573.20
68	Modify Ramp Metering System				$1,160.00

Total Reinforcing Items= $37,789.10

Cost of Bonds are not included in above prices. If Bonds required, Bond Rate is..... **0.6%**

SECTION IV- SPECIAL CONDITIONS, EXCLUSIONS AND/OR CLAIRIFICATIONS FOR THIS PROJECT

1 Prices firm through **12/31/2014**, ADD **$0.04** /per pound for deliveries and/or installation scheduled starting **1/1/2015**, ADD **$0.04** /per pound each six (6) months thereafter.

Harris Rebar Northern California Inc. 1384 N. Jackson Ave., Fresno, CA 93703 (559) 251-7363

SECTION V- STANDARD EXCLUSIONS BY SELLER & FURNISHED BY BUYER

1 Approved properly manned equipment for hoisting or lowering of reinforcing materials or men as required by Harris Rebar Northern California Inc., including hoisting for unloading trucks, power placing of steel and assemblies, pre-tied walls and charging of vertical reinforcing.
2 Clear access roads & ramps for unloading of trailer/truck deliveries to within 50 feet of point of installation, and reasonable storage and lay-down areas.
3 Double handling costs, including costs to transport material from an unreasonably located area.
4 Sitework, Masonry, Mock Ups, Shotcrete Test Panels, MSE Walls, Electrical Duct Bank, Equipment Pads, Pipe Supports & Encasement and similar.
5 Supply & installation of reinforcing for stair landings and treads.
6 Reinforcing for Anchor Points (and the Anchor Points) for Shotcrete
7 Reinforcing for precast and precast connections, prestressed and prestressing items
8 Trim reinforcing for openings, penetrations, and inserts not specifically located on Structural Drawings.
9 All welding and reforcing steel to be welded
10 Burning, cutting, or drilling of structural steel/miscellaneous iron to pass reinforcing steel.
11 Inserts, sleeves, rubatex, water stops, smooth dowels and /or dowel baskets, galvanized or epoxy coated dowels, threaded rebar, stud rails and placing of stud rails.
12 Covering, painting, galvanizing, epoxy coating, greasing or wrapping of reinforcing steel or smooth dowels.
13 Cleaning, cutting, straightening, locating or rework of existing reinforcing steel, reinforcing extending from piles, or precast
14 Cutting, drilling of holes, grouting, field bending or dry-packing of reinforcing steel.
15 Blocking, chairing, wrapping and/or pulling of welded wire fabric.
16 Metal rebar identification tags (Water & tear resistant plastic coated paper tags supplied)
17 Blocks, inspection tubes, wheels or spacers for clearances in drilled shafts or caissons.
18 Tie wire, accessories and field placing aids for F.O.B. materials.
19 Cost of inspection, testing, bonds, permits, penalties or Liquidated Damages.
20 Test bars and test couplers (except those specifically called out in specs)
21 Rebar Safety Caps or devices for covering rebar ends.
22 Cleaning of tie wire clippings, tags and other spoils from work areas, cost of debris boxes and composite crew cleanup, except as mutually agreed.
23 Cleaning of reinforcing of grease, oil, dirt, and other bond weaking materials prior to concrete pour
24 Removal of staples and/or any other device used to hold placing aids to forms.
25 Protection and/or cleaning of others work
26 Firm, level, subgrade at elevation shown on drawings.
27 Lines, grades, steel racks, templates, scaffolding, safety rails, work platforms & ramps, stray current protection
28 Layout of TOW, TOF, EOW, expansion/construction joints, corners, doorways, blockouts and/or openings of any kind and Masonry Dowels.
29 Adequate power and lighting when necessary.
30 Cost of reworking or replacing reinforcing steel damaged or lost due to flood, actions of buyer, other subcontractors or other acts of God.
31 All dead men, cables, labor and engineering of system for guying of rebar, if required.
32 BIM (Building Information Modeling) - Available Upon Request
33 Design Engineering, Engineer stamping of drawings, Field Measurements and As-Built drawings.
34 Separate Pour Watchman, Fire Watchman, Safety Manager, QC Mgr, Traffic Control, Onsite Security
35 Dust control, street sweeping, erosion control, cleaning of equipment prior to exiting jobsite
36 Parking area and/or cost of parking for field crews, area for jobsite office including utility hookup, sanitary facilities, and jobsite access to drinking water
37 Third party invoice processing fees or enrollment in third party invoicing services

SECTION VI- TERMS AND CONDITIONS

1 **Terms of Sale:** Payment Terms – Subject to on-going credit approval: Net 30 days from date of invoice. Interest will be charged on all past due balances per the maximum rate allowed by law. Legal fees and costs will be paid as awarded to the prevailing party in the event of a legal dispute. Seller reserves the right to stop Work or demand security as required. Buyer agrees to pay Seller in accordance with the escalation policy as specifically identified in this proposal. "Work" is hereby defined as the performance of all work as listed above and included in any accepted Agreement, plus any changes, acceleration/out of sequence work, damages, escalation and costs incurred for the cause or benefit of Buyer or others.

2 **Acceptance:** Prices of individual bid items are subject to renegotiation if Buyer elects not to accept this complete proposal as presented. If Seller is requested to proceed with the work prior to the execution of a mutually agreed Contract, or if the work is completed prior thereto, the Terms and Conditions herein shall govern pending said Agreement. No assignment of this proposal shall be made without our prior written consent. We reserve the right to sublet portions of our Work.

3 **Schedule:** Seller's price is based upon detailing, fabrication, and placing on a normal 5-day, Monday to Friday, 40 hour work week, daylight hours unless explicitly noted on the face hereof. Performance will be based on bid documents as provided for tender and industry standards/CRSI. Schedule and schedule changes to be mutually agreed. Buyer to provide Seller (48) hours' notice of cancellation or modifications to schedule deliveries. Buyer agrees to provide adequate notice for workmen required at the jobsite and sufficient work for at least one full shift. Detailing submittals will be sequenced in a manner appropriate to the construction schedule. Working schedules to be made by mutual agreement of the Contractor and Subcontractor to conform to Contractor's master schedule. In event duration times are provided by Subcontractor, it is agreed that time starts only when work areas are provided ready to receive installation in all respects, in accordance with OSHA and State safety regulations.

4 **Back Charges/Shipping Discrepancies:** No charges for labor or materials furnished by the Buyer shall be allowed as a credit unless authorized in writing by Seller within ten (10) days of said occurrence. After a twenty four (24) hour period, all loads will be assumed to be verified.

5 **Safety:** Buyer will provide at no cost to Seller, general jobsite conditions conforming to OSHA standards and local governing authorities, including, but not limited to, adequate protection to ensure the safety of those working above reinforced steel as required, furnishing and installation of rebar safety caps or other OSHA compliant impalement hazard protection as required; Detection of/protection from underground and other utilities; Safe access, signage and other required warnings, flagging, barriers/barricades, general site and task lighting as required; Shoring, fall-protection anchorage points, walkways, approved scaffolding and staging in place as required, trenches, rails, snow and ice removal, all weather truck access; safe access to points of storage and work, etc. all as required.

6 **Insurance:** General Liability insurance will be provided solely for work performed by Seller and/or its engaged parties. Seller is not providing insurance for any liabilities that exceed Seller's responsibilities and/or liabilities. Additional Insured Endorsements may limit liabilities to those assumed under the Agreement and exclude Professional Liabilities, XCU, subsidence, Professional Liability, Aircraft, Pollution Liability and mold coverage are excluded as not applicable to this trade. A broad coverage manuscript policy is provided in lieu of ISO descriptions and forms. Additional coverage or alternate requirements not set forth herein and mutually agreed are subject to availability and any additional costs. Self-insured limits must be accepted as provided and any related security substitution requirements waived. Seller excludes: Builders Risk Insurance and return receipt requested notices for all certificates of insurance. Compliance requirements for any hired sub-subcontractors are subject to availability.

7 **Project/Owner Information:** Contractor agrees to provide Subcontractor with any pertinent Project/Owner information, as reasonably requested.

Harris Rebar Northern California Inc. 1384 N. Jackson Ave., Fresno, CA 93703 (559) 251-7363

SECTION VII- CONDITIONS OF SALE EXCLUDED:

1 Pay if paid or "Pay when paid" conditions precedent for all properly completed work, including base scope of work, changes, acceleration/out of sequence work, damages, escalation and costs incurred for the cause or benefit of Buyer or others("Work"; Retention exceeding the rate withheld by Owner; Retention on F.O.B. items.

2 Indemnification, claim, and defense liabilities, responsibilities or damages exceeding any proportionate extent of cause by Seller's active negligence or willful misconduct.

3 Minority, DBE, DVBE, SBE, WBE and other special hiring status content, affiliation, or contribution to such requirements.

4 Risk, liabilities and responsibilities arising from existing conditions and preceding work exceeding visual inspection, including, but not limited to, field measurements, surveying, layout, forming and materials supplied by others; Costs arising from differing conditions and/or requirements from plans or drawings or bar lists provided for performance.

5 Design engineering and related Professional Liabilities and responsibilities: Costs and damages due to varying conditions and requirements.

6 Waiving any rights of dispute or redress; Costs/risks of claims against Owner for undisputed portions of our Work.

7 Forms and information requirements not mutually agreed; Unconditional forms of release in advance of receipt of funds; Releases that fail to exclude pending changes, unpaid balances, and retention as applicable; Releases for claims unrelated to payment for work performed: Non-conforming forms of waivers and releases within States that provide Statutory release language.

8 Reports, waivers, and other forms and contractual obligations related to bulk suppliers to our inventory stock who do not have lien rights.

9 Warranties exceeding Seller's scope of responsibilities or one (1) year; Guaranties of work performed by others; any forms of warranties, express or implied, of merchantability or fitness for purposes intended.

10 Risks and responsibilities for equipment and/or employees of Buyer or others providing services, or manning equipment used in connection with, but not within, Seller's scope of Work.

11 Liquidated and delay damages exceeding actual damages incurred, our scope of responsibility and/or our proportionate extent of cause, and for Force Majeure; Property damage, remedial work and/or replacement of Work and the work of others to the extent made necessary by others or Force Majeure.

12 Increased labor and material costs and/or damage in the event of project suspension or delay.

13 General Liability credits for any wrap-up insurance programs.

14 Prime contract terms, conditions, and scope in addition to, and/or in conflict with, a mutually agreed contract and Seller's scope of work and responsibilities as described herein.

15 Reports, submittals and data requirements not applicable to our trade, reasonably required or mutually agreed; Release of proprietary or other confidential information and records as governed by the U.S. Security and Exchange Commission rules for a publically traded company.

16 Any portion of fines or penalties exceeding the extent of cause by Seller; Any increased, surcharged or escalated portion of fines incurred by Buyer.

17 Enrollment/contributions to unions to which Subcontractor is not signatory; compliance with any additional or conflicting term, condition, or rate of pay, etc. between Seller's labor agreement and others affiliated with the Project.

18 Guarantors.

19 Site security.

SECTION VIII- ACCEPTANCE

The above proposal including all attached and referenced documents shall constitute a contract or shall be part of a contract is subject to on-going credit approval. Prices shown are for the complete project and NO single item price or group of prices are valid alone without the consent of the Seller. We reserve the right to modify/negotiate amendments to any Contractor issued forms of Agreement, as required to properly describe scope of work, pricing and mutually agreed terms and conditions.

Buyer: _____

By: _____

Title: _____

Date: _____

Seller: **Harris Rebar Northern California Inc.**

By: _____
Nick Williams

Title: Operations Manager

Date: _____

WaboBIDfax06-0M8204.xlsx **BID FAX** 09/03/2014

WABO Landscape & Construction, Inc.
726 ALFRED NOBEL DR. HERCULES, CA 94547 LIC. 962263 A, B, & C27
(510) 741-9226 FAX (510) 724-2391 bids@wabo.com

SUB-BID SUBMITTAL
Rt. 41,180 Fresno Co. Widen Shoulder And Construct Concrete Barrier
Contract No. 06-0M8204
06-Fre-41,180-Var

Bids: 03-Sep-14

Item	Item Code	Item	Unit Of Measure	Estimated Quantity	Unit Price (in Figures)	Total (in Figures)
30	200052	PRUNE EXISTING PLANTS	LS	LUMP SUM	LUMP SUM	5,580.00
31	204096	MAINTAIN EXISTING PLANTED AREAS	LS	LUMP SUM	LUMP SUM	8,000.00
32	205035	WOOD MULCH	CY	670	35.00	23,450.00
33	206400	CHECK AND TEST EXISTING IRRIGATION	LS	LUMP SUM	LUMP SUM	8,500.00
34	206402	OPERATE EXISTING IRRIGATION FACILITI	LS	LUMP SUM	LUMP SUM	8,500.00
35	208607	3" PLASTIC PIPE (CLASS 315) (SUPPLY LIN	LF	60	25.00	1,500.00
36	208820	10" WELDED STEEL PIPE CONDUIT	LF	50	150.00	7,500.00
72	999990	MOBILIZATION (Our Share)	LS	LUMP SUM	LUMP SUM	7,500.00

TOTAL BID 70,530.00

Items above must be taken as 1 package. No splitting of bid. Please call if you want to split any items

EXCLUSIONS, QUALIFICATIONS, & CONDITIONS

1 Percent retained from our payments to equal General Contractor's percent retained by owner.
2 WABO needs 20 Working Days for Construction
3 Bid includes maintain existing irrigation & planting costs for the contract working day limit ONLY.
4 Additional maintenance costs due to contract extension or suspension or delays are excluded.
5 Lane &/or ramp closures to be done when Gen. has lanes or ramps closed, otherwise closures by others.
6 No pavement removal or replacement. No sawcutting, No patching, No temporary paving.
7 No clearing, grubbing, or tree or plant removal is included. No tree or plant protection.
8 Grades and/or subgrades to ±0.1' by others.
9 No soil removal, no import soil, no hazardous materials handling or removal.
10 No erosion control or maintenance of erosion control items.
11 Repair of existing landscape or irrigation damaged by others, is not included.
12 No hand or truck watering due to disruption of water supply beyond our control.
13 No surveying, No arborist.
14 We are signatory with the Laborers, Operators, and Plumbers Unions. We shall determine which union to dispatch crews from for our work as long as the jurisdiction & scope are incorporated into the selected unions agreement.
15 No bond is included with bid. WABO bond rate is 0.6%.
16 No insurance requirements beyond what is required by Caltrans Standard specs.
17 Maximum of 5,000,000 excess umbrella. No railroad requirements. No Builders Risk.
18 We must be notified in writing within 5 working days of damage to work of others by our forces.
19 There shall be no repairs of damage to work of others at our expense without prior written approval.
20 This proposal shall be included as an attachment to the subcontract.
21 Certified as small business, State of California DGS, # 1731785, expires: 10/31/14
22 5 addenda noted
23 All Items must be taken as 1 package. No splitting of bid.
24 Please call if you want to split any items

If items are not legible or you have any questions please call or FAX us.
Steve Gladden 510-741-9226 ext.130

$ 120,000.00

Madco Electric, Inc.

Fax Transmission

Lic. #749866
SBE#61748

From: Michael Merigian

To: Estimating Dept.

Company:

Date: 9/3/14

RE: 06-0M8204

EXCLUSIONS: Bonds, Permits, Utility Fees, Surveying, Traffic Control, Testing, Demo

Bond Rate: [.0078] Less than one percent. Madco Electric, Inc. to be paid upon completion of their work.

Fax: (559)896-4568
Phone: (5501896-5637

madco8812@gmail.com
Signatory to Laborers Union
Equal Opportunity Employer
Electrical Open Merit Shop
Member ABC

2135 E. Front St
Selma, Ca. 93662

Item No.	Item Code	Item Description	Unit of Measure	Estimated Quantity
61	027617	CONCRETE BARRIER MARKERS	EA	25
62	027618	CONCRETE BARRIER TRANSITION CONNECTION	LF	75
63	027619	ALTERNATIVE CRASH CUSHION SYSTEM	EA	5
64	839701	CONCRETE BARRIER (TYPE 60)	LF	770
65	839703	CONCRETE BARRIER (TYPE 60C)	LF	1,010
66	840515	THERMOPLASTIC PAVEMENT MARKING	SQFT	170
67	860090	MAINTAINING EXISTING TRAFFIC MANAGEMENT SYSTEM ELEMENTS DURING CONSTRUCTION	LS	LUMP SUM
68	861088	MODIFY RAMP METERING SYSTEM	LS 30,000.00	LUMP SUM
69	861503	MODIFY LIGHTING	LS 80,000	.00 LUMP SUM
70	999990	MOBILIZATION	LS 10,000	.00 LUMP SUM

$120,000.00

La Firma Inc.

DBE 39322

715 Ridge Road
Nipomo, CA .93444
Phone: 805-748-8576
Fax: 805-929-0501
E-Mail:
estimating@theswpppfirm.com
Web: www.theswpppfirm.com

September 2, 2014
Project: 06-0M8204
Widen Shoulder And Construct Concrete Barrier
06-Fre-41,180-Var

We are pleased to provide you with a bid for the item listed below based on plans, and specifications and (5) addendums.

Bid item.

Item	Code	Description	Unit	Quantity	Unit Price	Total
13	130200	Prepare Water Pollution Control Program.	LS	LS	$650.00	$650.00

Exclusions and qualifications.

1. Special testing and permits not in contract.
2. Price includes (1) electronic copy and (5) printed copies.

THANK YOU FOR YOUR TIME AND CONSIDERATION,

VICENTE BRAVO.
CPESC QSD/P #305

Back To Query Form

Search Returned 1 Records

Mon Jul 21 18:33:34 PDT 2014

Query Criteria

Firm/DBA Name: La Firma
Zip Code: 93444
Firm Type: DBE

Firm ID	38322
Firm/DBA Name	LA FIRMA INC.
Address Line1	715 RIDGE ROAD
Address Line2	
City	NIPOMO
State	CA
Zip Code1	93444
Zip Code2	
Mailing Address Line1	
Mailing Address Line2	
Mailing City	
Mailing State	
Mailing Zip Code1	
Mailing Zip Code2	
Certification Type	DBE
EMail	estimating@theswppfirm.com
Contact Name	VICENTE C. BRAVO
Area Code	(805)
Phone Number	748-8578
Fax Area Code	(805)
Fax Phone Number	929-0501
Agency Name	DEPARTMENT OF TRANSPORTATION
Counties	01; 02; 03; 04; 05; 06; 07; 08; 09; 10; 11; 12; 13; 14; 15; 16; 17; 18; 19; 20; 21; 22; 23; 24; 25; 26; 27; 28; 29; 30; 31; 32; 33; 34; 35; 36; 37; 38; 39; 40; 41; 42; 43; 44; 45; 46; 47; 48; 49; 50; 51; 52; 53; 54; 55; 56; 57; 58;
Districts	01; 02; 03; 04; 05; 06; 07; 08; 09; 10; 11; 12;
DBE NAICS	238990; 541620;
ACDBE NAICS	
Work Codes	C2021 HYDROSEEDING; C2030 EROSION CONTROL; C8700 CONSULTANT, NON ENGINEERING; C8852 SWPPP Planning;
Licenses	B General Building Contractor; D64 Nonspecialized;
Trucks	
Gender	M
Ethnicity	NATIVE AMERICAN
Firm Type	DBE

Back To Query Form

VERIDICO GROUP, INC.

PROGRAM MANAGEMENT | ENVIRONMENTAL SERVICES | WATER RESOURCES ENGINEERING

DBE Contractor – CUCP Certificate Number 39572

Date: 25 AUG 14 (REVISED 2 SEPT 14)

Contract #: 06-0M8204 – WIDEN SHOULDER AND CONSTRUCT CONCRETE BARRIER
Bid Date: 3 SEPT 2014

Veridico Group, Inc. (Veridico) is pleased to provide the following contract pricing for the specified work scope items detailed in the subject contract solicitation:

Item No.	Item code	Item Description	Unit of Measure	Est Qty	Bid	Amount
1	070030	LEAD COMPLIANCE PLAN (ADL)	LS	LS	$1,250.00	$1,250.00
1	070030	LEAD COMPLIANCE PLAN (PAINT STRIPES)	LS	LS	$1,250.00	$1,250.00
12	130100	JOB SITE MANAGEMENT (PARTIAL)	LS	LS	$9,730.00	$9,730.00
13	130200	PREPARE WATER POLLUTION CONTROL PROGRAM (PARTIAL – PLAN ONLY)	LS	LS	$595.00	$595.00
Totai						**$12,825.00**

TERMS AND CONDITIONS:

1. This quote and attached terms and conditions must become a binding part of any sub-contract.
2. A contract and 10 working days notice must be given prior to start of work. This quote shall remain valid for 30 days from date of actual bid opening, unless otherwise agreed upon.
3. TERMS: Due and payable within 30 days from date of installation and/or as per Business and Professional code 7108.5 and Public contract code 10262.5 (for progress payments) and/or as per Public contract Code 7107 (for retention due).
4. All change orders must be approved by agency/owner prior to work being performed by Veridico.
5. Excludes any insurance requirements in excess of Caltrans Standard Specifications.
6. Offered bid item quotes **CAN BE SPLIT**.

P.O. Box 673, Roseville, California 95661
Phone: 707-317-0002, Fax: 707-620-7000
www.veridicogroup.com

ASSUMPTIONS

1. Job Site Management assumes a project duration of 70 days (field work), or 14 weeks of on-site field work. If the actual construction duration is less (or more), the Prime may multiply the number of field weeks by $695.00.

   14 weeks x $695.00/week = $9,730.00

   This is a weekly rate for Veridico to conduct a half-day per week site visit to document required WPCP compliance; Caltrans forms 2030 and 2034 completed by or under the direction of a QSD/P, and physical site inspection. Pre-, during and post-rain event site inspections are not included but will be billed at the Job Site Management rate if required. No other plans, reports, monitoring or permits are included.
2. Field monitoring may be required for the Lead Compliance Plan. A CIH can be provided to oversee the monitoring for **$1,950 per day** including all labor, travel, perdiem, materials, supplies, and lab costs. For bidding purposes, assume **TWO (2) dayS** for the lead monitoring; or a **total of $3,900.00** for the on-site monitoring.
3. The WPCP and the LCP are **guaranteed** acceptance for the quoted bid.
4. Contractor to provide completed questionnaire (supplied by Veridico upon notice of award) prior to start of work.
5. Print-ready electronic draft and final copies of plans and/or reports will be provided so hard copies can be produced; no hard copies will be provided by Veridico.

Veridico is a certified DBE contractor (No. 39572) with a number of associates that have supported Caltrans projects for many years. We have the necessary certified personnel to support your efforts on this project and we look forward to providing you our highest level of project support. Please don't hesitate to contact me directly at (707) 317-0002 or at tim.anenson@veridicogroup.com if we can provide anything further.

My Very Best Regards,
VERIDICO GROUP, INC.

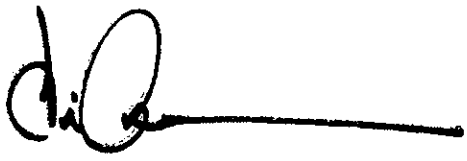

Tim Anenson, QSD, CPSWQ
Principal Consultant

Alfred Civil Engineering

7604 Soquel Way

Citrus Heights, CA 95610

9/01/2014

DBE Certification # 41902

QSD/P Certification # 48604

==========

Subject: 06-0M8204: Widen Shoulder and Construct Concrete Barrier in Fresno County at Various Locations

Attn: Estimator

We have reviewed the plans and specifications for the above-referenced contract and submit for your consideration the following services:

Item No	Item Code	Item Description	Unit	Quantity	Unit Cost	Amount
12	130100	JOB SITE MANAGEMENT	LS	1	$5,600	$5,600

The scope includes the following activities by a QSD/P:

JOB SITE MANAGEMENT

Includes monitoring and inspection to control material pollution, waste and non-stormwater at the job site.

Includes providing a WPC manager; conducting water pollution control monitoring; inspecting and correcting water pollution control practices.

Scope does not include provision, transport, or installation of BMP materials.

If you have any questions or require additional information, please do not hesitate to contact us

Sincerely,

Bori A Touray

Bori A. Touray PE, QSD/QSP

touray@alfredce.com

Alfred Civil Engineering

(916) 241-5309

Alfred Civil Engineering

7604 Soquel Way

Citrus Heights, CA 95610

9/01/2014

DBE Certification # 41902

QSD/P Certification # 48604

==========

Subject: 06-0M8204: Widen Shoulder and Construct Concrete Barrier in Fresno County at Various Locations

Attn: Estimator

We have reviewed the plans and specifications for the above-referenced contract and submit for your consideration the following services:

Item No	Item Code	Item Description	Unit	Quantity	Unit Cost	Amount
13	130200	PREPARE WATER POLLUTION CONTROL PROGRAM	LS	1	$750	$750

The scope includes the following activities by a QSD/P:

PREPARE WATER POLLUTION CONTROL PROGRAM

Includes developing and amending the WPCP.

Scope does not include provision, transport, or installation of BMP materials.

If you have any questions or require additional information, please do not hesitate to contact us

Sincerely,

Bori A Touray

Bori A. Touray PE, QSD/QSP

touray@alfredce.com

Alfred Civil Engineering

(916) 241-5309

From: Bori Touray Fax: (916) 374-7383 To: Fax: +1 (559) 348-9272 Page 3 of 5 09/02/2014 11:01

Back To Query Form

Search Returned 1 Records

Tue Aug 26 16:48:33 PDT 2014

Query Criteria

Firm/DBA Name: Alfred civil engineering
Firm Type: DBE

Firm ID	41902
Firm/DBA Name	ALFRED CIVIL ENGINEERING
Address Line1	7604 SOQUEL WAY
Address Line2	
City	CITRUS HEIGHTS
State	CA
Zip Code1	95610
Zip Code2	
Mailing Address Line1	
Mailing Address Line2	
Mailing City	
Mailing State	
Mailing Zip Code1	
Mailing Zip Code2	
Certification Type	DBE
EMail	btouray@comcast.net
Contact Name	BORI A. TOURAY
Area Code	(916)
Phone Number	235-3967
Fax Area Code	( )
Fax Phone Number	
Agency Name	DEPARTMENT OF TRANSPORTATION
Counties	01; 02; 03; 04; 05; 06; 07; 08; 09; 10; 11; 12; 13; 14; 15; 16; 17; 18; 19; 20; 21; 22; 23; 24; 25; 26; 27; 28; 29; 30; 32; 33; 34; 35; 36; 37; 38; 39; 40; 41; 42; 43; 44; 45; 46; 47; 48; 49; 50; 51; 52; 53; 54; 55; 56; 57; 58;
Districts	01; 02; 03; 04; 05; 06; 07; 08; 09; 10; 11; 12;
DBE NAICS	541330; 541340; 541620; 541690;
ACDBE NAICS	
Work Codes	C8705 DESIGN; C8710 ENGINEERING; C8713 CONSULTANT, ENVIRONMENTAL; C8715 CONSULTANT, ENGINEERING; C8720 CIVIL ENGINEERING; C8722 ENVIRONMENTAL ENGINEER; C8765 DRAFTING; C8766 Computer-aided Design & DRAFTING (CADD); C8767 GIS Modeling; C8781 Engineering - Hydrology; C8794 Environmental - Water Quality; C8852 SWPPP Planning;
Licenses	EC Civil Engineer;
Trucks	
Gender	M

Ethnicity	BLACK
Firm Type	DBE

Back To Query Form

From: Boni Tousay Fax: (916) 374-7383 To: Fax: +1 (559) 348-9272 Page 4 of 5 09/02/2014 11:01

Water Boards Storm Water Multiple Application - Report Tracking System

Help Logout

You are logged-in as: Bori Touray - .
If this account does not belong to you, please log out.

Navigate To:

User Account Details

This page allows you to enter or edit your user account details. Enter and edit the details as needed in the fields below and click on "Save" button to save the details. Back to Main Menu

User ID: btouraycomcastne

First Name: Bori * ?

Middle Name: A ?

Last Name: Touray * ?

Phone: 916-241-5309 (999-999-9999) Ext:

Title: Water Resources Enginee

Business Name: ALFRED CIVIL ENGINEE *

Business Address: USA Address International Address

Street Address: 7604 Soquel Way * (Enter PO Box addresses in the Street Address Field)

Address Line2:

City: Citrus Heights * State: CA * Zip: 95610 *

Save Cancel

Change Password Change Email Address Create New Organization

CBPELSG - QSD

Name	Address	Email	License No.	Certification No.	Edit
Bari Touray	7604 Soquel Way - Citrus heights - CA 95610	btouray@comcast.net	48604	C48604	Edit
Bori Touray	7604 Sequel Way - Citrus Heights - CA 95610	btouray@comcast.net	48604	C48604	Edit

Associated Organizations: The following are the organizations associated with your user account. In order to start a new / view existing Change of Information of an organization; Click on Start/New COI link of the corresponding organization.

Name	Address	Role	COI	Delink Organization	eAuthorization Form
ALFRED CIVIL ENGINEERING	7604 SOQUEL WAY CITRUS HEIGHTS CA 95610	Data Entry Person	Start/New COI	Delink	Print eAuthorization Form

Associated COIs for your organizations: Click on COI ID to view the corresponding Change of Information details.

COI ID	Organization Name	Submitter	COI Date	COI Status	Delete COI

© 2014 State of California. Conditions of Use Privacy Policy

PACIFIC
EH&S Services, Inc.

July 21, 2014

Emmett's Excavation, Inc.
6207 E. Clinton Ave Fresno
Phone: 5593479188 Fax Number: 5593489272

Estimating Department – Sub Quote for Caltrans Project 06-0M8204

Pacific EH&S Services, Inc. (Pacific EH&S) is pleased to present this proposal:

Prepare Water Pollution Control Program (WPCP):
WPCP written by a QSP/QSD. Assumes no more than 8 Engineering Drawings. Includes 3 hard copies delivered.
Fee: $800.00

Lead Compliance Plan (Certified by CIH) and training per Caltrans Standard Provisions Section 7-1.02k(6)(j)(ii) (complies with 8 CA Code of Regs).
Fee: $1,000.00

Provisions:

a. Scope of work shall meet contract plans and special provisions.
b. Contractor is responsible to obtain all permits required from city, county, state, and federal agencies.
c. Lab Sampling/Analysis fees shall be billed at cost plus 10%.
d. Contractor responsible for all permitting fees.

The quote presented herein is based on our best-guess estimates as to the labor and number/types of services that will be required to complete our scope of work. If additional or less sample analyses or labor are required, our fees will be adjusted accordingly.

If you have any comments or questions concerning the information presented in this proposal, or if you would like us to proceed with these services, contact our office at (800) 530-9774, or reach me by cell at (760) 585-8338.

Sincerely, Matt Morrison

Pacific EH&S Services, Inc.
Matt Morrison
800-530-9774 toll free
949-250-6398 fax
760-585-8338 cell
http://www.stormwaterpollutionplan.com / http://www.pacificehs.com
matt@stormwaterpollutionplan.com

559-299-0281

Adanta, Inc.
828 School Street
Napa, California 94559
Tel. (707) 709-8894
Fax (707) 736-8368

Adanta

Native American woman-owned
California DOT-Certified DBE
DBE Certificate #37357

July 30, 2014

Attn: Estimator **DBE Quote -**

Subject: **Caltrans Contract 06-0M8204**

PROPOSAL FOR: ***BID ITEM***
Item, LEAD COMPLIANCE PLAN **$1,275.00**

Dear Estimator:

Adanta is pleased to present this bid to provide environmental services for the above referenced project. The Lead Compliance Plan will be prepared in accordance with Caltrans' Notice to Bidders and Special Provisions for this project. The LCP will address these concerns to protect workers and ensure proper handling of lead-containing materials, and will contain the elements listed in Title 8, California Code of Regulations, Section 1532.1(e)(2)(B). The LCP will be prepared, signed and stamped by an Industrial Hygienist certified in Comprehensive Practice by the American Board of Industrial Hygiene. Quotes for air monitoring and lead awareness training upon request.
If you have any questions, please feel free to contact us at (707) 709-8894.

Sincerely,

Kimberly Patz

Kimberly Patz, President (kimberlypatz@adanta-inc.com)

Adanta Inc.

Phone: 707-709-9994
Fax: 707-736-9369

Fax

To: Emmett's Excavation	From: Kimberly Patz
Fax: 5593489272	Pages: 2
Re: Caltrans 06-0M9204	Date: July 30, 2014

DBE Quote - Lead Compliance Plan

Brought to you by SmartFax™

FAX COVER SHEET

TO	
COMPANY	
FAX NUMBER	15593489272
FROM	Tim Mehta, PD; QSD
DATE	2014-08-18 17:56:14 GMT
RE	06-0M8204 WPCP BID PROPOSAL

COVER MESSAGE

ATTENTION: ESTIMATING ESWPPP CONSULTANTS, LLC, DBE CERTIFIED

DBE CERTIFICATION # 35275 902 CORTINA COURT WALNUT CREEK, CA 94598
PHONE
(925) 451 – 1337

FAX # (925) 956-7191 <%28925%29%20956-7191>

Email address: eswppp@hotmail.com <eswppp@hotmail.com>

August 18, 2014

BID OPEN DATE: 8/27/2014

CALTRANS CONTRACT: *06-0M8204 *

1. *PREPARE LEAD COMPLIANCE PLAN (PARTIAL, DOCUMENT ONLY):
$1190** *

2. *PREPARE **WATER POLLUTION CONTROL PLAN (WPCP-3 COPIES,
PARTIAL,
WPCP DOCUMENT ONLY): $699 Base price**

* NOTES:*

*WPCP will be prepared using the latest approved Caltrans template available at the time of the contract bid opening. Document only-does not include personnel training, inspection reports, amendments, annual cert., etc. Base price: includes preparing a WPCP document as per Contract specification, plans and bid item list. Any additions /revisions /changes /amendments to the WPCP which is not part of the original contract (including changes needed for obtaining approval of the WPCP and revisions needed because of wrong information) will be charged $75/hour.

** Document only, does not include personnel training; air monitoring or personnel protective equipments, etc.

*IF YOU HAVE ANY QUESTIONS, PLEASE CALL TIM MEHTA OF OUR STAFF AT (925)
451-1337 <%28925%29%20451-1337>.*

Tim Mehta

ESWPPP CONSULTANTS, LLC, DBE CERTIFIED

A State certified small-micro business

VERUX

2443 Fair Oaks Blvd. #150
Sacramento, CA 95825
Phone: (916) 850-5758
Fax: (888) 840-5935
bob@veruxinc.com
www.veruxinc.com

Project Name: DOT 06-0M8204 Widen Shoulder & Construct Concrete Barrier – Fresno County, CA

Date: August 27, 2014 **Bid No:** 14-1727

Storm Water Services Proposal

Prepare Water Pollution Control Program (WPCP) - $850.00

Provide one (1) electronic copy of Water Pollution Control Program (WPCP) along with three (3) manuals for the above referenced project. Price includes any revisions that may be required for final approval.

Submitted for **Verux, Inc.** by **Bob Shults:**	_____ Authorized Signature
_____ Date	_____ Title

THIS PROPOSAL IS SUBJECT TO THE FOLLOWING TERMS AND CONDITIONS: Price valid only if this proposal is signed and returned to Verux, Inc. within 30 days. Proposal excludes permits, bonds, licenses, fees, retention and engineering. Payment is due in full 15 days after work is performed. Accounts subject to a late charge of 1 ½% per month if not paid within 30 days.

_____ Client Name	_____ Authorized Signature
_____ Date	_____ Printed Name/Title

HIGHTAIL

Log In Free Trial Sign Up

Certification152.pdf

Expires in [illegible] days

Download

Nancy Espie-Underwood

QUOTES FOR PROJECT # 06-0M8204 LCP & SWPPP

LCP $625.
SWPPP $1319.

SDBE CERT ATTACHED

59.7 KB Adobe Acrobat Document

Get them all.

Just got a bunch of files?
Learn how to quickly download them all.

Language English ▼

About Us
Careers
Press
News

Blog
Support
Partnerships
Solutions

Terms of Service
Privacy Policy
Cookie Policy
Copyright
Site map

Contact Sales 1 (866) 558-7363
Contact Support 1 (888) 535-9442

P.S. You look great today.

Facebook
Twitter
LinkedIn
Vimeo
Google+

© Hightail Inc. 2014

1919 S. Bascom Avenue
Campbell, CA 95008
United States of America

CALIFORNIA UNIFIED CERTIFICATION PROGRAM (CUCP)

June 29, 2010

Ms. Nancy Espie-Underwood
UGE & ECS, Inc
550 N. Figueroa St. Unit 6036
Los Angeles, CA 90012

RE: DISADVANTAGED/MINORITY/WOMEN BUSINESS ENTERPRISE (DBE/MBE/WBE) RECERTIFICATION APPROVAL File No. - 163 - 32609

Dear Ms. Espie-Underwood:

We are pleased to advise you that after careful review of your application and supporting documentation, the City of Los Angeles has determined that your firm meets the eligibility standards to be recertified as a **Disadvantaged/Minority/Women Business Enterprise (DBE/MBE/WBE)** as required under the U.S. Department of Transportation (U.S. DOT) Regulation 49 CFR Part 26, as amended.

Your firm will be listed in the California Unified Certification Program (CUCP) database of certified DBEs and the City of Los Angeles DBE/MBE/WBE directory under the following specific area(s) of expertise that you have identified on the business service form for contracting opportunities:

NAICS Code	Description
541330	**Engineering Services**
541620	**Environmental Consulting Services**
541690	**Other Scientific and Technical Consulting Services**
562910	**Remediation Services**

Your DBE certification is good for five years from the date of this letter and applies only for the above codes. You may review your firm's information in the CUCP DBE database, which can be accessed at the California Department of Transportation's website at www.dot.ca.gov/hq/bep/ and the City of Los Angeles DBE/MBE/WBE database at http://bca.lacity.org. Any additions and revisions must be submitted to the City of Los Angeles for review and approval.

After the five-year certification period, your entire file will be reviewed in order to ascertain continued DBE certification status. You will be notified of the pending DBE status review and any documentation update necessary prior to the expiration date.

The Regulations also require annual updates during this five-year period. In order to assure continuing DBE status, you must submit annually a DBE Declaration with supporting documentation, in the format, which will be sent to you. Based on your annual submission that no change in ownership and control has occurred, or if changes have occurred, they do not affect your firm's DBE standing, the DBE certification of your firm will continue until the five-year certification has expired.

CALIFORNIA UNIFIED CERTIFICATION PROGRAM
DISADVANTAGED BUSINESS ENTERPRISE CERTIFICATE

UGE & ECS, INC.

550 N. FIGUEROA ST., UNIT 6036
LOS ANGELES, CA 90012

Owner: NANCY ESPIE-UNDERWOOD
Business Structure: CORPORATION

This certificate acknowledges that said firm is approved by the California Unified Certification Program (CUCP) as a Disadvantaged Business Enterprise (DBE) as defined by the U.S. Department of Transportation (DOT) CFR 49 Part 26, as may be amended, for the following NAICS codes:

NAICS Code(s) * Indicates primary NAICS code

* 541330 Engineering Services
541690 Other Scientific and Technical Consulting Services
562910 Remediation Services
541620 Environmental Consulting Services

Work Category Code(s)

C8700	CONSULTANT, NON ENGINEERING	C8851	Lead Compliance
C8852	SWPPP Planning	C9801	BUILDING CONSTRUCTION
C9903	CONSTRUCTION CLEAN UP		

Licenses

A General Engineering Contractor
ASB Asbestos

CERTIFYING AGENCY:
CITY OF LOS ANGELES
1149 SOUTH BROADWAY STREET
LOS ANGELES, CA 90015 0000
(213) 847-1922

UCP Firm Number : 32609

CUCP OFFICER

April 8, 2013

APCO

ASPHALT DIKE CONSTRUCTION, Inc. dba APCO
P.O. BOX 790, GOSHEN, CA 93227-0790
(559) 651-7900 ◦ FAX (559) 651-7905
CA. LIC # 283095
SMALL BUSINESS #20321
www.apcodike.com

08/26/2014

PROJECT #: 06-0M8204
PROJECT NAME: CALTRANS ROUTE 41
LOCATION: FRESNO

PROPOSAL #: 14-432
WEEKDAY DAYTIME HOURS

WE PROPOSE TO FURNISH LABOR & EQUIPMENT IN STRICT ACCORDANCE WITH THE PLANS AND SPECIFICATIONS AS NOTED BELOW. PLEASE MAKE REFERENCE TO OUR PROPOSAL NUMBER WITH ALL INQUIRIES AND CORRESPONDENCE. PURCHASE ORDER MUST BE RECEIVED WITHIN THIRTY (30) DAYS FROM DATE OF QUOTE OR QUOTATION IS INVALID.

SCOPE OF WORK

ITEM	TYPE OF WORK	TYPE	QTY	@	RATE	TOTAL
43	PLACE ASPHALT CONCRETE DIKE TYPE	E	490	LF	$8.00	**$3,920.00**
44	OVERSIDE DRAIN		11	SY	$75.00	**$825.00**
		TOTAL	**490**	**LF**	**TOTAL**	**$4,745.00**
	DAYS ON JOB 1	**MOVE IN'S** 1			**ADDITIONAL MOVES**	**$2,500.00**

NOTE: "DIKE MACHINES REQUIRE 12' WIDTH, DISCHARGE FROM THE LEFT SIDE. CONTROL POINTS TO BE PLACED AT FACE OF CURB BEFORE ARRIVAL, DIKE PLACED ON FINISHED SURFACE ONLY

1. proposal excludes traffic control, grading & cleaning, layout of control points, permits, testing, bonds, waiver of subrogation,city business "y business license asphalt under dike (pre-pave), asphalt and trucking

This quotation will be incorporated into the subcontract between the parties.(either a signed proposal or having these items included as an attachment or included in the contract.)

3. if a job is cancelled by customer after APCO's equipment and crew has been dispatched, regardless of conditions, customer will assume responsibility for all mobilization charges incurred. if a job is cancelled by customer after APCO has been on jobsite, regardless of conditions, customer will assume responsibility for time incurred. (minimum 2 hr show-up)

4. By accepting this bid, the customer agrees to pay Asphalt Dike Construction, inc. within thirty (30) days of Asphalt Dike Construction, inc. invoice date. After 30 days 18% APR will be charged to outstanding balances. Customer's receipt of payment is not a condition to customer's obligation to pay Asphalt Dike Construction, inc. Customer agrees that the funds for this project will not be offset from any claims or disputes on other projects. Retention will be paid to Asphalt Dike Construction, Inc. thirty (30) days after the notice of completion or acceptance, or if no notice is filed thirty (30) days after completion of the project as defined by the California Civil Code. No Retention bill be held on any daily rental rate work.

5. The unit prices quoted are for the estimated quantities set forth herein. The prices are subject to adjustment if the quantity of any item increases or decreases twenty percent (20%) or more from the estimate. Proposal is for Monday through Friday (Non-Holiday) normal daytime hours,

6. Asphalt Dike Construction, inc shall not be responsible for the protection of the finished work and / or any repairs that may be required due to damage by others. Unit prices quoted are for machine extruded asphalt only. Handwork extra.Customer agrees to indemnify and hold APCO harmless from any claims or disputes regardless of whether such claims are founded in whole or in part upon any negligent act or omission of APCO.

6. We require 15 days notice prior to start of work.

SUBMITTED BY:

Larry Grimes
Vice President
Asphalt Dike Construction, inc. dba
APCO

ACCEPTED

CONTRACTOR DATE

CMG Hydroseeding, Inc.

BID

4460 W. Shaw Ave. #146 Fresno, CA 93722
Phone: 559-217-4703
Fax: 559-276-5020
BUSINESS LIC # 148657
CONTRACTOR LIC # 975046

DATE: 8/5/2014

Project: Caltrans 06-0M8204

Hydroseeding/Erosion Control

Bid Item #	Description	Measurement	Rate	Total
15	Temp Silt Fence	1150 LF	5.2500	$6,037.50
37	Move In/Move Out	2 EA	800.0000	$1,600.00
38	Hydromulch	8520 SQFT	0.0950	$809.40
39	Straw	0.4 TON	1,200.0000	$1,200.00
40	Hydroseed	8520 SQFT	0.0950	$809.40
				$0.00
				$0.00
				$0.00
				$0.00
				$0.00
				$0.00
				$0.00
				$0.00
				$0.00
				$0.00
				$0.00
				$0.00
				$0.00
			TOTAL	**$10,456.30**

For Bidding Purpose Only Price Good For 30 Days

Notes:

** Pricing in bid is per unit. Final square faatage is ta be determined prior to hydroseeding.*

*** CMG Insurance covers: General Liability, Auta Liability, Workers Comp up to $1,000,000.00, & General Aggregate up to $2,000,000.00. Any additional insurance required by contractar ar awner will be added to bid price.*

Thank You,

Brett Reinke
President

Chrisp Company

Stockton Office
1001 Stokes Ave
Stockton Ca 95215
one: (209) 948-2175 Fax: (209) 948-2179

Contractors License No. 374600
A General Engineering
C-13 Fence, Wire, wood
C-32 Highway Improvement

Quotation

Union Contractor / No minority Status

TO:

for the intended use of the General Contractor

Current Date: 8/26/2014
BidDate: 9/3/2014
JobName: 06-FRE-41,180-VAR
Location: FRESNO Bid#: 24451 0
Contract#: 06-0M8204 Job#:
Working Days:

Liquidated Damages

ITEM NO.	DESCRIPTION	QUANTITY	UNIT	UNIT PRICE	TOTAL
01	Lead Compliance Plan (stripe removal)	1	SUM	1225.000	$1,225.00
05	Temporary Traffic Stripe (paint)	120	LF	2.000	$240.00
19	Remove Thermoplastic Pavement Marking	140	SF	3.000	$420.00
66	Thermoplastic Pavement Marking	170	SF	5.000	$850.00
70	Mobilization	1	SUM	6200.000	$6,200.00

TOTAL $8,935.00

Traffic Control For all Temporary Work to be supplied by General Contractor (2 Shifts)

Written Authorization is Required Prior to Proceeding With Work

ACCEPTED BY: **P.O. Number**

TITLE: **Job Number**

Bond Rate Addendum 1,2,3,4,5
1.5%

This quote includes all stipulations found on page 3

QUOTE PREPARED BY Stacy Stommel
(209) 456-0539
ststommel@chrispco.com
CHRISP COMPANY

Chrisp Company

Stockton Office
1001 Stokes Ave
Stockton Ca 95215
one: (209) 948-2175 Fax: (209) 948-2179

Contractors License No. 374600
A General Engineering
C-13 Fence, Wire, wood
C-32 Highway Improvement

Union Contractor / No minority Status

Quotation

COMMENTS, EXCLUSIONS, AND STIPULATIONS

The following stipulations are hereby incorporated into and made part of the quotation from Chrisp co. dated August 26, 2014 for the following project

06-FRE-41,180-VAR

- NO RETENTION TO BE TAKEN
- 3 Move- In(s) included. Additional Move- Ins $2,500.00 2 for temp work & 1 for permanent work
- Chrisp Company reserves the right to withdraw proposal if written acceptance is not received within 30 days of bid date
- EXCLUDE: Installation or removal of temporary delineation
- Clean, clear and unobstructed access required for Chrisp Co. work
- Final PAY QTYS presented by owner MUST be agreed by Chrisp Co.
- Changeable Message board if required to be provided by General Contractor for Chrisp Co. Use at no Charge to Chrisp Co.
- EXCLUDE: Traffic Control Plan
- EXCLUDE: Removal of Existing Pavement Markers
- Lead Compliance Plan is included for stripe and marking removal ONLY.
  EXCLUDE: Removal of Concrete Curing Material prior to PAINT / THERMOPLASTIC / PAVEMENT MARKER
- Contractor is to Provide Stockpile Location for Striping Removal Debris.
- EXCLUDE: Red-Lined As-Built Drawings
- Traffic Control INCLUDED for Chrisp Company PERMANENT work ONLY
- Traffic Control IS NOT included for TEMPORARY WORK
- After receiving contract 10 working days written notice required prior to scheduling of work
- EXCLUDE: Special Insurance Requirements,(i.e. Railroad Insurance,_____)
- All night lights required are to be supplied by general contractor
- EXCLUDE: Construction Area Signs
- Chrisp Co. will remove contractors short term temporary markers (Floppys) placed for lanelines and centerlines only (no edgelines or shoulders). No Tape removal. Short Term Temporary markers are to be placed so that striping may be placed before removal of markers.
- This quotation excludes Primary Liability Insurance greater than $2,000,000.
- This quotation excludes all work associated with the project SWPP and WPCP.
- This quotation excludes installing permanent striping while other operations are in progress on jobsite.
- This quotation excludes performing removal work while other operations are in progress on jobsite.
- This quotation Excludes furnishing or placing ALL signage for advance posting of ramp closures / detours for our operations.
- This quotation Excludes furnishing or placing ALL detour signage for our operations.
- EXCLUDE: Encroachment Permit (If required to be provided at No Cost to Chrisp Company)
- EXCLUDE: ALL Safety Training, Badging and Orientation (To be paid at time and material Cal-Trans rates)

Chrisp Company

Stockton Office
1001 Stokes Ave
Stockton Ca 95215
Phone: (209) 948-2175 Fax: (209) 948-2179

Contractors License No. 374600
A General Engineering
C-13 Fence, Wire, wood
C-32 Highway Improvement

Union Contractor / No minority Status

Quotation

- **Mobilization & Traffic Control items shall not be adjusted for decreases in the work.**
- **Mobilization & Traffic Control items shall be adjusted for increases in the work**
- **Prime contractor to provide disposal area & dispose of all Non-hazardous stripe & marker debris. Disposal area to be on jobsite.**
- **EXCLUDE: Maintenance of temporary delineation ie. temporary paint, etc...**
- **ALL Bid items shall NOT be adjusted or removed without written / or verbal permission.**

SAFETY STRIPING SERVICE, INC.
PO Box 1020
6868 Avenue 305
Goshen, CA 93227
TEL: (559) 651-1022
FAX: (559) 651-1118
Contractors License #308869

CALIFORNIA SMALL BUSINESS 14354

Signatory Contractors, Laborer's International, Northern & Southern California

SUBCONTRACTOR QUOTATION

PROJECT: 06-0M8204 Widen Shoulder & Construct Concrete Barrier
County of Freeno

DATE: September 3, 2014

QUOTE#: 14-061

Item #	Description	Unit	Est Qty	Unit $	Total $
1	Lead Compliance Plan (Non-Hazardous)(Partial)*	LS	1	$1,500.000	$1,500.00
3	Traffic Contal System (Partial)*	LS	1	$3,600.000	$3,600.00
5	Temporary Traffic Stripe (Paint)	LF	120	$10.000	$1,200.00
19	Remove Thermoplastic Pavement Marking	SF	140	$12.000	$1,680.00
66	Thermoplastic Pavement Marking	SF	170	$15.000	$2,550.00
	* Partial items contain our scope of work only.				
	Safety Striping Service is a certified California DVBE / SBE (#14354)				
	SEE PAGE 2 FOR CONDITIONS.			TOTAL	$10,530.00

PROJECT: 06-0M8204 Widen Shoulder
DATE: 09/03/2014

TERMS AND CONDITIONS

- Safety Striping Service, Inc is signatory to the Laborer's of Northern and Southern California.
- **Safety Striping Service, Inc is a certified California DVBE / SBE (Certification # 14354).**
- Safety Striping Service, Inc. requires IMMEDIATE notification upon being listed by the apparent low bidder, for purposes of scheduling and material management.
- Safety Striping Service, Inc. requires a written subcontract, purchase order or signed quote prior to mobilization for any work, or placing the order for job specific materials (i.e. signs, lead plans, etc).
- Safety Striping Service, Inc requires an invitation to pre-job meetings.
- Bonds are not included in this quote. If bonds are required, call for rate.
- This quote includes up to two (2) move-ins, defined as a period of consecutive eight hour days of continuous work, not including weekends or holidays. Any deviances from this, other than those initiated by Safety Striping Service, Inc, will be considered additional move-ins and billed at $2,500.00 each.
- Referencing is included in this quote. Our referencing is **LINEAR ONLY**, identifying the limits of and changes in the striping details present prior to obliteration. Contractor is required to comply with Section 39-6.01 of the 2006 Standard Specifications (39-1.11 of the 2010 S.S.). Field Layout due to the misplacement of paving seams is at the prime Contractor's expense (Extra Work Force Account). Mobilization for referencing will not be considered a move-in.
- The unit price for removal includes the installation of tabs, but only on striping obliterated by Safety Striping. *Tab maintenance is the responsibility of the Contractor.* Any required temporary signage (i.e. "No Passing," etc) as well as any temporary edgeline delineation (i.e. cones, delineators, etc) is the responsibility of the Contractor.
- Price for removal includes clean up of our work; however the Contractor must provide a dumpsite at the project location for our sweeper and an adequate water source for our removal equipment. All removal debris becomes the responsibility of the Contractor.
- Bid excludes any and all items related to handling hazardous materials including, but not limited to: *removal, testing, containment, hauling and disposal.* If potentially hazardous material (i.e. yellow thermoplastic) is discovered on the job-site, we will stop work until it is determined (in writing) to be non-hazardous, or a change order is issued for proper handling.
- This quote includes removal of tabs placed on center and lane lines only (excludes any locations where delineators can be used). This applies only to a single set of tabs properly placed at approximately 24' on center.
- Message Boards are not included in this quote, and are to be provided by Contractor per contract requirements.
- **A minimum of fifteen (15) working days advance notice is required for referencing and for each mobilization.**
- We require exclusive access to the roadway without obstacles and the ability to begin work upon arrival at the job-site. Delays caused by conflicts in scheduling are the responsibility of the Contractor and are subject to standby time computed as labor in section 9-1.03A of the Standard Specifications.
- This quotation is valid for a period of sixty (60) calendar days from the date of issue and may be extended at the sole discretion of Safety Striping Service, Inc.
- Safety Striping carries $1 million in GL ($2 million GA); $1 million in Auto; $1 million in Work Comp.

These terms and conditions shall supersede any bid request, advertisement or subcontract language. Should this quotation be accepted, the entire quotation (both pages) must be included in the subcontract agreement or purchase order.

Submitted by: *Billy De Witt, Estimator*

Date: 09 / 03 / 2014

I have read and understand the "Terms and Conditions" stated above and agree that this Quotation (including said terms and conditions) will become a part of the agreement between our company and Safety Striping Service, Inc.

General Contractor: _____

Signature: _____ **Title:** _____

Name (Print): _____ **Date:** _____

RDD

POWER DESIGN ELECTRIC INCORPORATED

"Partnering With Clients for Mutual Success"

PO BOX 251, Kingsburg, CA 93631--Tel 559-897-2599--Fax 559-897-0189--WWW.PowerDesignElectric.com--CA Lic. No. 851246

Electrical Bid Proposal

Date 9/03/2014

To: Emmett's Excavation
6207 E. Clinton Ave
FresnoCA

Estimating Dept.

Tel: 559-347-9188
Fax: 559-348-9272

Project: DOT 06-0M8204 Widen Shoulder

Certifications: Power Design Electric Inc. is certified as a Disabled Veteran Business Enterprise and a Small Business Enterprise by the State of California. Certification #40750.

Scope of Work: Power Design Electric, Inc. hereby proposes to furnish all labor, material, equipment, services, tools and transportation to install a complete and operational electrical system as per electrical plans and specifications and as itemized herein.

Specific items included (but not limited to):

Light fixtures, light pole bases, lamps, Signals, devices and Signal Control
Underground, trenching, Boring and backfill
Distribution Equipment, panels, circuit breakers, disconnects
Daily cleanup and trash disposal
Electrical Demo

Bid Price, Item # 67: $ 7,000.00
Bid Price, Item # 68: $ 93,300.00
Bid Price, Item # 69: $ 24,400.00

Bid Total: $124,700.00

Exclusions:
Formed concrete work (other than listed above)
Permit or inspection fees or bonding
Grubbing, Removal, loading, hauling or disposal of concrete, asphalt, trenching spoils
Street or construction Signage
SWPPP

Acknowledging 5 addenda

Thank you for the opportunity to provide your firm with this proposal. If you have any questions or concerns, please contact our office at 559-897-2599

Submitted by:
Dan McIntyre//Estimating

RDC

TENNYSON ELECTRIC, Inc.

SB Certified # 33555

Bid Proposal

Bid Date: September 3rd, 2014 @ 2:00 PM

Attn: Estimating Department

RE: Contract No. 06-0M8204 in Fresno County at Various Locations
Scope: Electrical

We are pleased to submit our proposal for the electrical work on the above project as follows:

Item No.	Description	Unit	Qty	Unit Price	Total
67	Maintain Existing TMSE During Construction	LS	1	4,250.00	4,250.00
68	Modify Ramp Metering System	LS	1	138,950.00	138,950.00
69	Modify Lighting	LS	1	41,650.00	41,650.00
70	Mobilization	LS	1	9,500.00	9,500.00
				Total Bid	**194,350.00**

Addendums Noted: One

We exclude the following items:

- Bond - Our bonding rate is .75% and available upon request
- Fees, permits, inspection fees, encroachment permits, traffic control
- staking, surveying or layout, off haul of spoils or handling of contaminated materials
- Asphalt or concrete removal or restoration, false work or temporary electrical
- WPCP and SWPPP, dewatering

If you have any questions please do not hesitate to call me.

Thank You,

Michael Tennyson
Estimator

7275 National Drive Suite A, Livermore, CA 94550
CA License #717998 C10 exp 1/31/2016 (925) 606-1038 Fax (925) 606-7655

11

BID ITEMS MADE AVAILABLE FOR SUBCONTRACTORS TO BID

BID ITEM LIST

06-0M8204

Item No.	Item Code	Item Description	Unit of Measure	Estimated Quantity	Unit Price	Item Total
1	070030	LEAD COMPLIANCE PLAN	LS	LUMP SUM	LUMP SUM	
2	120090	CONSTRUCTION AREA SIGNS	LS	LUMP SUM	LUMP SUM	
3	120100	TRAFFIC CONTROL SYSTEM	LS	LUMP SUM	LUMP SUM	
4	120120	TYPE III BARRICADE	EA	24		
5	120159	TEMPORARY TRAFFIC STRIPE (PAINT)	LF	120		
6	120165	CHANNELIZER (SURFACE MOUNTED)	EA	58		
7	128652	PORTABLE CHANGEABLE MESSAGE SIGN (LS)	LS	LUMP SUM	LUMP SUM	
8	129000	TEMPORARY RAILING (TYPE K)	LF	1,020		
9	129100	TEMPORARY CRASH CUSHION MODULE	EA	11		
10	BLANK					
11	BLANK					
12	130100	JOB SITE MANAGEMENT	LS	LUMP SUM	LUMP SUM	
13	130200	PREPARE WATER POLLUTION CONTROL PROGRAM	LS	LUMP SUM	LUMP SUM	
14	130620	TEMPORARY DRAINAGE INLET PROTECTION	EA	1		
15	130680	TEMPORARY SILT FENCE	LF	1,150		
16	130900	TEMPORARY CONCRETE WASHOUT	LS	LUMP SUM	LUMP SUM	
17	141120	TREATED WOOD WASTE	LB	4,680		
18	150661	REMOVE GUARDRAIL	LF	1,110		
19	150715	REMOVE THERMOPLASTIC PAVEMENT MARKING	SQFT	140		
20	150747	REMOVE ROADSIDE SIGN (STRAP AND SADDLE BRACKET METHOD)	EA	3		

REPLACED PER ADDENDUM NO. 3 DATED AUGUST 8, 2014

Item No.	Item Code	Item Description	Unit of Measure	Estimated Quantity
21	150748	REMOVE ROADSIDE SIGN PANEL	EA	10
22	150771	REMOVE ASPHALT CONCRETE DIKE	LF	1,490
23	150820	REMOVE INLET	EA	1
24	152390	RELOCATE ROADSIDE SIGN	EA	5
25	153130	REMOVE CONCRETE CURB (LF)	LF	450
26	158100	SALVAGE CRASH CUSHION	EA	2
27	160102	CLEARING AND GRUBBING (LS)	LS	LUMP SUM
28	190101	ROADWAY EXCAVATION	CY	180
29	198010	IMPORTED BORROW (CY)	CY	75
30	200052	PRUNE EXISTING PLANTS	LS	LUMP SUM
31	204096	MAINTAIN EXISTING PLANTED AREAS	LS	LUMP SUM
32	205035	WOOD MULCH	CY	670
33	206400	CHECK AND TEST EXISTING IRRIGATION FACILITIES	LS	LUMP SUM
34	206402	OPERATE EXISTING IRRIGATION FACILITIES	LS	LUMP SUM
35	208607	3" PLASTIC PIPE (CLASS 315) (SUPPLY LINE)	LF	60
36	208820	10" WELDED STEEL PIPE CONDUIT	LF	50
37	210010	MOVE-IN/MOVE-OUT (EROSION CONTROL)	EA	2
38	210300	HYDROMULCH	SQFT	8,520
39	210420	STRAW	TON	0.4
40	210430	HYDROSEED	SQFT	8,520

Item No.	Item Code	Item Description	Unit of Measure	Estimated Quantity
41	260203	CLASS 2 AGGREGATE BASE (CY)	CY	75
42	390136	MINOR HOT MIX ASPHALT	TON	270
43	394076	PLACE HOT MIX ASPHALT DIKE (TYPE E)	LF	490
44	394090	PLACE HOT MIX ASPHALT (MISCELLANEOUS AREA)	SQYD	11
45 (F)	510502	MINOR CONCRETE (MINOR STRUCTURE)	CY	3.3
46	560248	FURNISH SINGLE SHEET ALUMINUM SIGN (0.063"-UNFRAMED)	SQFT	42
47	560249	FURNISH SINGLE SHEET ALUMINUM SIGN (0.080"-UNFRAMED)	SQFT	140
48	566011	ROADSIDE SIGN - ONE POST	EA	1
49	568001	INSTALL SIGN (STRAP AND SADDLE BRACKET METHOD)	EA	3
50	568017	INSTALL ROADSIDE SIGN PANEL ON EXISTING POST	EA	10
51	620100	18" ALTERNATIVE PIPE CULVERT	LF	20
52	620140	24" ALTERNATIVE PIPE CULVERT	LF	180
53	650014	18" REINFORCED CONCRETE PIPE	LF	22
54	700637	36" CORRUGATED STEEL PIPE INLET (.064" THICK)	LF	5
55	705315	24" ALTERNATIVE FLARED END SECTION	EA	1
56	721026	ROCK SLOPE PROTECTION (NO. 1, METHOD B) (CY)	CY	8
57	729011	ROCK SLOPE PROTECTION FABRIC (CLASS 8)	SQYD	20
58	730020	MINOR CONCRETE (CURB) (CY)	CY	19
59 (F)	750001	MISCELLANEOUS IRON AND STEEL	LB	1,214
60	027616	CONCRETE BARRIER DELINEATORS	EA	42

BID ITEM LIST
06-0M8204

Item No.	Item Code	Item Description	Unit of Measure	Estimated Quantity	Unit Price	Item Total
61	027617	CONCRETE BARRIER MARKERS	EA	25		
62	027618	CONCRETE BARRIER TRANSITION CONNECTION	LF	75		
63	027619	ALTERNATIVE CRASH CUSHION SYSTEM	EA	5		
64	839701	CONCRETE BARRIER (TYPE 60)	LF	770		
65	839703	CONCRETE BARRIER (TYPE 60C)	LF	1,010		
66	840515	THERMOPLASTIC PAVEMENT MARKING	SQFT	170		
67	860090	MAINTAINING EXISTING TRAFFIC MANAGEMENT SYSTEM ELEMENTS DURING CONSTRUCTION	LS	LUMP SUM	LUMP SUM	
68	861088	MODIFY RAMP METERING SYSTEM	LS	LUMP SUM	LUMP SUM	
69	861503	MODIFY LIGHTING	LS	LUMP SUM	LUMP SUM	
70	BLANK					
71	027862	ALTERNATIVE TEMPORARY CRASH CUSHION SYSTEM	EA	3		
72	999990	MOBILIZATION	LS	LUMP SUM	LUMP SUM	

TOTAL BID: **$** _____

REPLACED PER ADDENDUM NO. 3 DATED AUGUST 8, 2014

12

SUMMARY OF EFFORTS TO DIRECT SUBCONTRACTORS TO MBDA AND SBA SPECIALIZED ASSISTANCE

mail@eei78.com

From: <mail@eei78.com>
Date: Tuesday, August 26, 2014 4:19 PM
To: <aabalos@basselectric.net>; <aavila7777@gmail.com>; <admin@adhenvironmental.com>; <AHERA@PACBELL.NET>; <aj@ajvasconi.com>; <alisa@movendirt.com>; <allearthconstruction@gmail.com>; <andelengineering@yahoo.com>; <bennettconst1978@aol.com>; <bids@espls.com>; <blequipment@aol.com>; <brucej@mjavila.com>; <bruceortiz@aol.com>; <burkebid@gmail.com>; <b-w-w@live.com>; <camrock@camrockenvr.com>; <camrocksave@comcast.net>; <cbenites@verizon.net>; <cmtdon@yahoo.com>; <co@costraffic.com>; <contractor@dirtag.com>; <cooks_son@gmail.com>; <cplum@pcnconstructioninc.com>; "David Jordan" <djordan@ccsurveying.net>; <david@safetystriping.com>; <deborah@wtbinc.org>; <deniseddm@yahoo.com>; <dora@unitedtraffic.net>; <dreambuilder.construction@gmail.com>; <eci@lightspeed.net>; "Ed Childress" <edc@klassencorp.com>; <edc@vintagepavingco.com>; <edsafetyinc@yahoo.com>; <email@acdike.com>; <forcetraffic@earthlink.net>; <garryeasley@surewest.net>; "Gary Castro" <garyc@krcsafety.com>; <GOLDENBAYFENCE@YAHOO.COM>; <greenejeans1@att.net>; <hector.castellon@hercatelecomm.com>; <hintoncg@yahoo.com>; <igarcia.nlstrucking@yahoo.com>; <j_camacho@camcosolutions.net>; <jbaez@advgeosolutions.com>; <jcbayline@sbcglobal.net>; <jesmarboring@sbcglobal.net>; <jmoraga@flash.net>; <Joe@jtccorp.com>; <jordan@riojordaninc.com>; <jorge@mercadeco.com>; <josh@superiorhydroseeding.net>; <jtaylor514@earthlink.net>; <jtonyvaldez@hotmail.com>; <karen@imaginmetals.com>; <Kari@rmtlandscape.com>; <kdesena@linkzone.com>; <kedypn@msnavarroeng.com>; <kevinphan@amiandcorp.com>; <leasha5@aol.com>; <lesley@dirtmarket.com>; <mark@triumphgeo.com>; <massx6@hotmail.com>; <mcculloughmacky@aol.com>; <mitchd@alertolite.com>; <MonSLee@yahoo.com>; <moronia@acefencecompany.com>; <msouza61@att.net>; <nish-koinc@comcast.net>; "Nitta Erosion Control" <nittainc@hotmail.com>; <nittaec@gmail.com>; <office@interwestpacific.com>; <parmeter@wildblue.net>; <patriciad@dillardenv.com>; <paving_serna@sbcglobal.net>; <pawilsoninc@gmail.com>; <queenie_chief2003@yahoo.com>; <rambakersfield@yahoo.com>; <randcconstruction@sbcglobal.net>; <rcande@pacbell.net>; <rcervantes@newlandentities.com>; <redwinetest@pprodigy.net>; <ricky@reserrano.com>; <robin@tullygroup.com>; <romenag@jonasinc.com>; <rpendurthi@earmanagement.com>; <samsequipment@comcast.net>; <sdefly@ddge.net>; <sjdinc@att.net>; <suem@gmail.com>; <titusthomas20@yahoo.com>; <toni.medina@att.net>; <tonimf@falconbuildresanddevelopers.com>; <trafficloop@sbcglobal.net>; <trila.grsi@yahoo.com>; <valdez05@gmail.com>; <vapconstructioninc@gmail.com>; <wegrindasphalt@aol.com>
Attach: Caltrans Contract 06-0M8204 - AIS.pdf
Subject: Caltrans Contract 06-0M8204 - Assistance Information Sheet

Good afternoon,

Attached is the Revised Assistance Information Sheet for Caltrans Contract 06-0M8204. Please make note of the REVISED Bid Date: September 3, 2014 @ 2:00 PM.

For any questions, feel free to contact our office at (559) 347-9188.

Thank you,

Kellie Reid, Estimating
EMMETT'S EXCAVATION, INC.

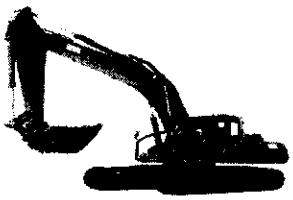

Emmett's Excavation, Inc.
6207 E. Clinton Avenue, Fresno, CA 93727
Tel: (559) 347-9188 Fax: (559) 348-9272
California License # 579845

ASSISTANCE INFORMATION SHEET

DATE: August 26, 2014

COMPANY: **PLEASE NOTE REVISED BID DATE!**

ATTN: Estimator

PHONE:

EMAIL:

FROM: Kellie Reid

PAGES: 1 (includes this page)

BID DATE: **SEPTEMBER 3, 2014 @ 2:00 PM**

PROJECT: **CALTRANS**

FOR CONSTRUCTION ON STATE HIGHWAY IN FRESNO COUNTY
AT VARIOUS LOCATIONS
IN DISTRICT 06 ON ROUTE 41, 180
CONTRACT NO. 06-0M8204
FEDERAL PROJECT NO. ACHSNHPG-X019(028)E

Work must be completed within 70 working days
Liquidated Damages are $1,900 per day
Prevailing Wage Rates are Required
Engineer's Estimate: $930,000.00

Emmett's Excavation, Inc. is bidding this project as a Prime Contractor. We are seeking Subcontract Proposals for all trades. We are also seeking proposals from DBE, MBE, & WBE underutilized minority status subcontractors. We are willing to break down Bid Items into economically feasible units to facilitate minority participation upon request.

Should you need any specialized assistance involving your business and/or your ability to bid the above project, example: securing bonding, insurance, minority certification, operating capital, etc., please contact the following United States Organizations listed below.

U.S. Small Business Administration – Fresno District Office
801 "R" Street, Suite 201
Fresno, CA 93721
Ph. (559) 487-5791
Fx. (559) 487-5636
Website. www.sba.gov/ca/fresno
Contact Name: Lori R. Lesher – Business Development Specialist
Email. Lori.lesher@sba.gov

U.S. Department of Commerce – Minority Business Development Agency
San Francisco National Enterprise Center
221 Main Street, Room 1280
San Francisco, CA 94105
Ph. (415) 744-3001
Fx. (415) 744-3061
Email. Sfro-info@mbda.gov
Website. www.mbda.gov

Thank You,

Kellie Reid, Estimating
EMMETT'S EXCAVATION, INC.
Email Address: mail@eei78.com

mail@eei78.com

From: <mail@eei78.com>
Date: Thursday, July 10, 2014 3:14 PM
To: <aabalos@basselectric.net>; <aavila7777@gmail.com>; <admin@adhenvironmental.com>; <AHERA@PACBELL.NET>; <aj@ajvasconi.com>; <allearthconstruction@gmail.com>; <andelengineering@yahoo.com>; <bennettconst1978@aol.com>; <bids@espls.com>; <blequipment@aol.com>; <brucej@mjavila.com>; <bruceortiz@aol.com>; <bsalas@bertsalasinc.com>; <burkebid@gmail.com>; <b-w-w@live.com>; <camrock@camrockenvr.com>; <camrocksave@comcast.net>; <cbenites@verizon.net>; <cmtdon@yahoo.com>; <contractor@dirtag.com>; <cooks_son@gmail.com>; <cplum@pcnconstructioninc.com>; <david@safetystriping.com>; <deniseddm@yahoo.com>; <dlconstruction@hotmail.com>; <dreambuilder.construction@gmail.com>; <eci@lightspeed.net>; "Ed Childress" <edc@klassencorp.com>; <edc@vintagepavingco.com>; <edsafetyinc@yahoo.com>; <email@acdike.com>; <forcetraffic@earthlink.net>; <garryeasley@surewest.net>; "Gary Castro" <garyc@krcsafety.com>; <ggeneng@aol.com>; <GOLDENBAYFENCE@YAHOO.COM>; <greenejeans1@att.net>; <hector.castellon@hercatelecomm.com>; <hintoncg@yahoo.com>; <j_camacho@camcosolutions.net>; <jbaez@advgeosolutions.com>; <jcbayline@sbcglobal.net>; <jesmarboring@sbcglobal.net>; <jmoraga@flash.net>; <Joe@jtccorp.com>; <jordan@riojordaninc.com>; <jorge@mercadeco.com>; <josh@superiorhydroseeding.net>; <jtaylor514@earthlink.net>; <jtonyvaldez@hotmail.com>; <JVD_INC@yahoo.com>; <karen@imaginmetals.com>; <Kari@rmtlandscape.com>; <kdesena@linkzone.com>; <kedypn@msnavarroeng.com>; <kevinphan@amiandcorp.com>; <lauren@starbursteng.com>; <leasha5@aol.com>; <lesley@dirtmarket.com>; <lovettexcavating@earthlink.net>; <mark@triumphgeo.com>; <massx6@hotmail.com>; <mcculloughmacky@aol.com>; <michael@safetygeni.com>; <MonSLee@yahoo.com>; <moronia@acefencecompany.com>; <msouza61@att.net>; <nish-koinc@comcast.net>; <nittaec@gmail.com>; <norm@blackstoneasphalt.com>; <office@interwestpacific.com>; <patriciad@dillardenv.com>; <paustin@austin-enterprise.com>; <paving_serna@sbcglobal.net>; <pawilsoninc@gmail.com>; <profconst@aol.com>; <queenie_chief2003@yahoo.com>; <rambakersfield@yahoo.com>; <randcconstruction@sbcglobal.net>; <rcande@pacbell.net>; <rcervantes@newlandentities.com>; <redwinetest@pprodigy.net>; <ricky@reserrano.com>; <robin@tullygroup.com>; <romenag@jonasinc.com>; <rpendurthi@earmanagement.com>; <samsequipment@comcast.net>; <sdefly@ddge.net>; <sjdinc@att.net>; <stephanie@chfence.net>; <suem@gmail.com>; <titusthomas20@yahoo.com>; <toni.medina@att.net>; <tonimf@falconbuildresanddevelopers.com>; <trafficloop@sbcglobal.net>; <trila.grsi@yahoo.com>; <valdez05@gmail.com>; <van@cpengineering.com>; <vapconstructioninc@gmail.com>; <wegrindasphalt@aol.com>
Attach: SKMBT_36314071011000.pdf
Subject: Invitation to Bid - Caltrans Contract 06-0M8204

Good afternoon all,

Attached is the invitation to Bid for Caltrans Contract #06-0M8204. Feel free to contact our office at (559) 347-9188, should you have any questions or need further assistance.

Thank you,

Kellie Reid, Estimating
Emmett's Excavation Inc.

Emmett's Excavation, Inc.
6207 E. Clinton Ave., Fresno, CA 93727
Tel: (559) 347-9188 Fax: (559) 348-9272
California License # 579845

ASSISTANCE INFORMATION SHEET

DATE: July 10, 2014

COMPANY:

ATTN: Estimator

PHONE:

EMAIL:

FROM: Kellie Reid

PAGES: 1 (includes this page)

BID DATE: **August 6, 2014 @ 2:00 PM**

PROJECT: **CALTRANS**

CONSTRUCTION ON STATE HIGHWAY IN FRESNO COUNTY AT VARIOUS LOCATIONS IN DISTRICT 06 ON ROUTE 41, 180
CONTRACT NO.: 06-0M8204

Work must be completed within 70 working days
Liquidated damages are $1,900 per day
Prevailing wage rates are required
Engineers Estimate $930,000.00

Emmett's Excavation, Inc. is bidding this project as a Prime Contractor. We are seeking Subcontract Proposals for all trades. We are also seeking proposals from DBE, MBE, & WBE underutilized minority status subcontractors. We are willing to break down Bid Items into economically feasible units to facilitate minority participation upon request.

Should you need any specialized assistance involving your business and/or your ability to bid the above project, example: securing bonding, insurance, minority certification, operating capital, etc., please contact the following United States Organizations listed below.

U.S. Small Business Administration – Fresno District Office
801 "R" Street, Suite 201
Fresno, CA 93721
Ph. (559) 487-5791
Fx. (559) 487-5636
Website. www.sba.gov/ca/fresno
Contact Name: Lori R. Lesher – Business Development Specialist
Email. Lori.lesher@sba.gov

U.S. Department of Commerce – Minority Business Development Agency
San Francisco National Enterprise Center
221 Main Street, Room 1280
San Francisco, CA 94105
Ph. (415) 744-3001
Fx. (415) 744-3061
Email. Sfro-info@mbda.gov
Website. www.mbda.gov

Thank You,

Kellie Reid, Estimating
Emmett's Excavation, Inc.
Email Address: mail@eei78.com

09-08-14P01:46 RCVD

EMMETT'S EXCAVATION, INC.

UDBE, DBE, & DVBE GOOD FAITH EFFORTS DOCUMENTATION

CALTRANS

CONSTRUCTION ON STATE HIGHWAY IN FRESNO COUNTY AT VARIOUS LOCATIONS IN DISTRICT 06 ON ROUTE 41, 180

Contract No. 06-0M8204

Federal-Aid Project

ACHSNHPG-X019(028)E

BIDS: SEPTEMBER 3, 2014 @ 2:00 PM