REPORT NO. FHWA-CA-TL-79-14

EVALUATION AND CALIBRATION OF ROAD METER DEVICES FOR MEASURING PAVEMENT RIDEABILITY

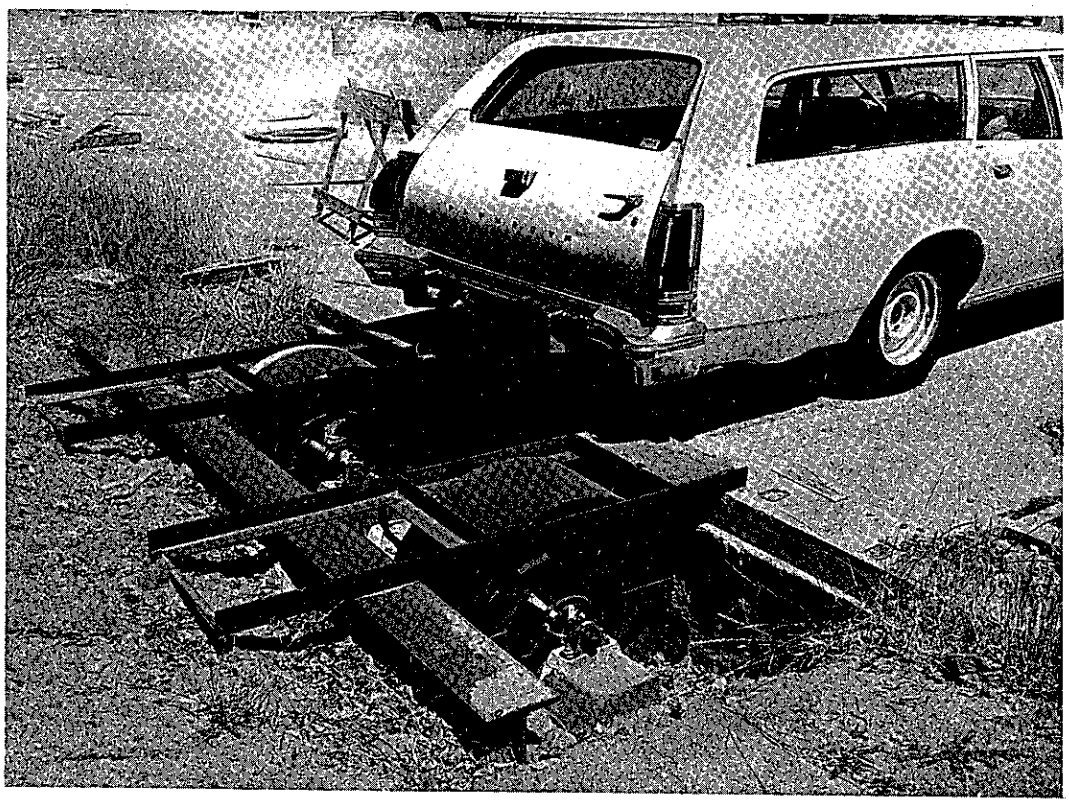

FINAL REPORT

JUNE 1979

Caltrans

CALIFORNIA DEPARTMENT OF TRANSPORTATION

ClibPDF - www.fastio.com

NOTICE

The contents of this report reflect the views of the Office of Transportation Laboratory which is responsible for the facts and the accuracy of the data presented herein. The contents do not necessarily reflect the official views or policies of the State of California or the Federal Highway Administration. This report does not constitute a standard, specification, or regulation.

Neither the State of California nor the United States Government endorse products or manufacturers. Trade or manufacturers' names appear herein only because they are considered essential to the object of this document.

ClibPDF - www.fastio.com

TECHNICAL REPORT STANDARD TITLE PAGE

1. REPORT NO.	2. GOVERNMENT ACCESSION NO.	3. RECIPIENT'S CATALOG NO
FHWA-CA-TL-79-14		

4. TITLE AND SUBTITLE	5. REPORT DATE
EVALUATION AND CALIBRATION OF ROAD METER DEVICES FOR MEASURING PAVEMENT RIDEABILITY	June 1979
	6. PERFORMING ORGANIZATION CODE
7. AUTHOR(S)	8. PERFORMING ORGANIZATION REPORT NO.
B. F. Neal	19303-653171
9. PERFORMING ORGANIZATION NAME AND ADDRESS	10. WORK UNIT NO
Office of Transportation Laboratory California Department of Transportation Sacramento, California 95819	11. CONTRACT OR GRANT NO. F-7-34
12. SPONSORING AGENCY NAME AND ADDRESS	13. TYPE OF REPORT & PERIOD COVERED
California Department of Transportation Sacramento, California 95807	Final 1976-1979
	14. SPONSORING AGENCY CODE

15. SUPPLEMENTARY NOTES

This project was performed in cooperation with the U.S. Department of Transportation, Federal Highway Administration.

16. ABSTRACT

This report is divided into three parts. Part one covers the state of the art of Road Meter technology and describes some recent significant advances.

The second part describes the evaluation of a velocity sensor for measuring axle movement to determine roughness rather than the normal method of mechanically determining the movement between axle and car body.

Part three describes methods of Road Meter calibration, and limited testing of a dynamometer type calibration device constructed at the laboratory.

17. KEY WORDS	18. DISTRIBUTION STATEMENT
Calibrations, road meters, state of the art studies, velocity measurement	No restrictions. This document is available to the public through the National Technical Information Service, Springfield, VA 22161

19. SECURITY CLASSIF. (OF THIS REPORT)	20. SECURITY CLASSIF. (OF THIS PAGE)	21. NO. OF PAGES	22. PRICE
Unclassified	Unclassified	46	

DS-TL-1242 (Rev.6/76)

ClibPDF - www.fastio.com

ClibPDF - www.fastio.com

CONVERSION FACTORS

English to Metric System (SI) of Measurement

Quanity	English unit	Multiply by	To get metric equivalent
Length	inches (in)or(")	25.40	millimetres (mm)
		.02540	metres (m)
	feet (ft)or(')	.3048	metres (m)
	miles (mi)	1.609	kilometres (km)
Area	square inches (in^2)	6.432×10^{-4}	square metres (m^2)
	square feet (ft^2)	.09290	square metres (m^2)
	acres	.4047	hectares (ha)
Volume	gallons (gal)	3.785	litres (l)
	cubic feet (ft^3)	.02832	cubic metres (m^3)
	cubic yards (yd^3)	.7646	cubic metres (m^3)
Volume/Time			
(Flow)	cubic feet per second (ft^3/s)	28.317	litres per second (l/s)
	gallons per minute (gal/min)	.06309	litres per second (l/s)
Mass	pounds (lb)	.4536	kilograms (kg)
Velocity	miles per hour(mph)	.4470	metres per second (m/s)
	feet per second(fps)	.3048	metres per second (m/s)
Acceleration	feet per second squared (ft/s^2)	.3048	metres per second squared (m/s^2)
	acceleration due to force of gravity(G)	9.807	metres per second squared (m/s^2)
Weight Density	pounds per cubic (lb/ft^3)	16.02	kilograms per cubic metre (kg/m^2)
Force	pounds (lbs)	4.448	newtons(N)
	kips (1000 lbs)	4.448	newtons (N)
Thermal Energy	British thermal unit (BTU)	1055	joules (J)
Mechanical Energy	foot-pounds(ft-lb)	1.356	joules (J)
	foot-kips (ft-k)	1.356	joules (J)
Bending Moment or Torque	inch-pounds(ft-lbs)	.1130	newton-metres (Nm)
	foot-pounds(ft-lbs)	1.356	newton-metres (Nm)
Pressure	pounds per square inch (psi)	6895	pascals (Pa)
	pounds per square foot (psf)	47.88	pascals (Pa)
Stress Intensity	kips per square inch square root inch (ksi $\sqrt{in}$)	1.0988	mega pascals $\sqrt{metre}$ (MPa $\sqrt{m}$)
	pounds per square inch square root inch (psi $\sqrt{in}$)	1.0988	kilo pascals $\sqrt{metre}$ (KPa $\sqrt{m}$)
Plane Angle	degrees (°)	0.0175	radians (rad)
Temperature	degrees fahrenheit (F)	$\frac{tF - 32}{1.8} = tC$	degrees celsius (°C)

ClibPDF - www.fastio.com

ClibPDF - www.fastio.com

TABLE OF CONTENTS

	Page
INTRODUCTION	1
SUMMARY AND CONCLUSIONS	3
IMPLEMENTATION	4
STATE OF THE ART	5
EVALUATION OF A VELOCITY SENSOR	8
Discussion	12
Summary	13
CALIBRATION METHODS	28
REFERENCES	41
APPENDIX	42

ClibPDF - www.fastio.com

ClibPDF - www.fastio.com

INTRODUCTION

Probably the single most significant factor in determining the ability of a specific section of pavement to serve traffic in its present condition is the measure of how well it rides. Initially, the need for improving rideability was determined subjectively by one or more people. Over the years, numerous devices have been developed to objectively measure ride condition. In 1960, Hveem (1) described many of those that had been or were being used. Among them was a device developed in the 1920's which attached to the front axle of an automobile and measured the vertical movement of the axle with reference to the frame of the car. Development of a "Road Meter" had begun. California used a device of this sort to check newly constructed pavements into the 1950's. However, because of poor reproducibility of results and lack of correlation between vehicles, it was never adopted as a construction control tool.

Around 1965, Max Brokaw, then of the Portland Cement Association, developed the current version of Road Meter (2) which measures the movement between the rear axle and the automobile frame. He obtained reproducible results and demonstrated that a quantitative measure of rideability could be obtained. Road Meter measurements were also correlated with the CHLOE Profilometer providing a means of establishing a Present Serviceability Index (PSI) for rating pavements. Since the device was proven reliable and can be operated at highway speeds, it has been well accepted and adopted by numerous agencies for measuring pavement roughness.

Since 1969, our Office of Maintenance has used Road Meters in its biennial survey of all State highways. Equipment improvements over the years include automatic nulling,

ClibPDF - www.fastio.com

electronic signal pickup, continuous operation capabilities (dual channels), and an odometer tied to the operating channel. While these changes have greatly increased equipment reliance and speed of operation, there are at least three areas still needing improvements. These are equipment calibration, automated data recording and a means of decreasing the effect of vehicle variables.

The purpose of this project was to: 1) Investigate the state of the art of Road Meter development; 2) Evaluate the Velocity Sensor for signal pickup as a possible means of reducing the effect of vehicle variables; and 3) Develop a calibration device.

ClibPDF - www.fastio.com

SUMMARY AND CONCLUSIONS

1. Some significant improvements have been made in Road Meter technology. These include equipment advances and automation of data gathering and reduction.

2 Velocity sensor output did not appear to offer any significant advantage for routine roughness measurements. Graphical output indicated that the velocity sensor or a similar type device might have potential for evaluating specific areas such as bridge approaches or faulting of PCC pavements.

3. Most agencies still use "standard" roads for calibrating Road Meter equipment and vehicles. In Quebec, Canada, a method was developed using "models" of roads made up of rubber mats. Only limited testing was done on the drum (dynamometer type) device built at the laboratory. Results were inconclusive but are being furnished to the researchers on NCHRP Project 1-18, for comparison with their findings.

ClibPDF - www.fastio.com

IMPLEMENTATION

Significant advances have been made in Road Meter technology and should be implemented in California. Equipment is now available to automatically record Road Meter output in a form which can be fed directly into a computer for analysis. Reports can be produced in a variety of formats. This would eliminate the labor intensive method now used to record and transfer data. It is recommended that the Office of Maintenance be responsible for implementation.

Road Meter operators should be advised of the criticality of speed variations from 50 MPH, especially those below 50 MPH. Cars should be equipped with automatic speed control systems to avoid such variations to the greatest extent possible.

ClibPDF - www.fastio.com

STATE OF THE ART

At a Road Meter Workshop at Purdue University, in 1972 (3), the large attendance indicated the widespread interest in Road Meter usage. It was also found that the concerns of California researchers over certain limitations were shared by many others. Balmer (4) reiterated these limitations in a state of the art report on road roughness technology.

A search of the research information data banks to which we have computer access, failed to turn up much in the way of new developments of significance in Road Meter technology.

Through contacts in person, by telephone and correspondence, some new and encouraging developments were found to be taking place. In 1976, Wisconsin had provided onboard automated equipment to reduce raw data to summed counts per mile. It also provided the potential for a future magnetic tape data storage system. The tape could then be fed directly into an off-board computer system for further processing and storage. As of this date, these features have not been added.

In New York, a Road Meter was developed to suit their needs and to provide automated recording of data. Considerable information on the device was included in a paper on Pavement Management Systems (5). A transducer puts out a continuous voltage analog of the interaction amplitude of the vehicle response to profile and speed. This output and various encoded event information is stored on two tracks of a stereo cassette. The tape is then fed into a computer which reduces and analyzes the data.

ClibPDF - www.fastio.com

As well as can be determined, this is by far the greatest advance in Road Meter technology in recent years. The equipment has proven to be both durable and reliable, and the users are very pleased with the system. It is unfortunate that reports on the equipment development have not been published so that other potential users could be taking advantage of this technology.

Australia has also developed a device to fit their needs. By modifying a Mays Meter, they constructed what they call a NAASRA (National Association of Australian State Road Authorities) Roughness Meter (6). This equipment is fully automated with results recorded on punched paper tape. Data are then analyzed by computer. Remote and direct link recorders can also be used with this device to provide a thermally printed trace of the output.

Cox and Sons of Colfax, California is under contract with another State to build a device which is called an "Ultrasonic Ranging Road Meter". This device is based on standard Road Meter methodology but will use an ultrasonic distance measuring device to monitor the distance between the differential housing and the test vehicle body. The unit is to be microprocessor controlled with programs provided for "on-board" data reduction. Correction factors can be keyed in for adjustments to variables such as speed, vehicle, odometer and temperature of shock absorbers. Data identification symbols can be readily added. A 20 column thermal printer is to be used for data output which can be printed in one of several available formats. Capability is built in for recording data so that it could be fed directly into computers for storage. Fabrication and software development is well along and it is hoped to have the device operating by the summer of 1979.

ClibPDF - www.fastio.com

MTS Systems of Saratoga, California has offered to build and demonstrate a system based on their Model 460 Portable Data Analyzer. Data acquired from a displacement transducer would be stored in the Analyzer and could then be fed directly into a computer. They believe they have the capabilities to build the device with mostly off-the-shelf hardware.

Undoubtedly there are other advances being made which were not discovered during this search. However, the advances in automation reported here should be of great interest to agencies with large highway inventories. For instance, California makes a Road Meter survey of some 45,000 miles of state highways every other year. Automation would eliminate the highly labor intensive method of manual data manipulation currently being used. While the modifications may increase equipment costs considerably, they should be economically viable because of manpower savings.

ClibPDF - www.fastio.com

EVALUATION OF A VELOCITY SENSOR

To eliminate vehicle suspension effects, we considered placing an accelerometer on the car body so that this movement could be subtracted from the total amount of movement measured, leaving only axle movement. It was then decided that possibly a velocity sensor could be used to measure axle movement directly. (The velocity sensor is a spring-mass device which emits an electronic signal when activated.) A "Vibration Pickup", Model 424, manufactured by Vibra-Metrics of East Haven, Connecticut, was purchased and installed on the front center of the differential housing of the TransLab's Road Meter vehicle, a 1975 Plymouth station wagon. Output, from vertical displacement of the axle, was displayed through an oscilloscope on several different roadways and at various speeds. The results were most encouraging.

The next step was to interface the velocity sensor to the Road Meter console. This was done by a local manufacturer, James Cox and Sons. To assure a stable current supply, an inverter was used to change the DC supply from the vehicle battery to AC then back to 14 volts DC. Output of the sensor was then channeled to the console for digital recording. Electronics were so arranged that each 1.25 volts output represented a 0.125-inch movement (No. 1 counter) and on up to 10 volts, a 1-inch movement (No. 8 counter). However, only upward or positive movement is recorded as opposed to the regular Road Meter recording both upward and downward excursions.

While the unit worked, the results were erratic with indications that the electro-mechanical counters operated too

ClibPDF - www.fastio.com

slowly to record all output. Electronic counters were then obtained and installed in a separate console so that both the regular Road Meter and the velocity sensor data could be recorded simultaneously if desired.

The first step in evaluation was to determine the amount of signal amplification (gain) to use. The signal processing unit had a potentiometer with 10 numbered divisions, with 100 subdivisions between numbers. Two runs were made at 50 mph on approximately 1-mile sections of 3 different roads, 2 concrete and 1 asphalt concrete (both north and southbound), with different gain settings.

Since the electronics were arranged to record movement in only one direction, it was necessary to evaluate data differently from that of the regular mechanical Road Meter. If the velocity sensor data is evaluated by determining the number of deviations of each magnitude and summing the products of the number and magnitude, the result is the same as merely adding the numbers on each counter. Dividing the summation by the distance run will give the summed counts per mile, the usual method of expressing results. In most of the data reported here, distances were approximately one mile, but since comparisons are based on the same length, no further calculations were made.

Table 1 shows the results of the initial testing. Gain settings beyond 5 effectively eliminated the "one" counts so no gain settings beyond 5 were continued. Also, no "eight" counts were obtained until the gain setting approached 5, so settings around 4 to 5 were considered near optimum. Repeatability was good and increases in gain gave fairly uniform increases in counts. Results from the AC pavement were interesting, the regular Road Meter indicating

ClibPDF - www.fastio.com

the southbound lane about 50% rougher than the northbound, and the velocity sensor indicating about equal roughness. Probably the frequency of certain types of roughness can affect Road Meter results (car body movements in relation to the axle) more than the velocity sensor which measures only axle movements.

To determine the effect of speed, a few tests were made at 25 mph. Table 2 shows the results of these tests. Based on similarity of results with mechanical pickup, it would appear that a gain setting of 2 might be optimum for this speed.

A number of different pavements were then run at gain settings of both 4 and 5. Regression analysis of the data from a setting of 5 indicate a fair correlation with the mechanical unit. Eliminating the data from the rough bridge results in better relationships at both settings (coefficients of correlation of .75 and .81). Figures 1 and 2 show plots of the data for settings 4 and 5 compared to the mechanical Road Meter.

In an effort to better understand the velocity sensor output, a printout was obtained with an oscillograph recorder (see Figure 3). Using this information, it was possible to add both an integrating circuit and a high-pass filter to the system, either of which would considerably reduce the numerical output. A 3-way switch allows the use of the equipment in either of the 3 operational modes.

Preliminary testing indicated that both the filter and integrator did indeed reduce the number of counts recorded. A gain setting of 5.0 was found to be necessary to obtain counts on the No. 8 counter, and 5.0 was established as

ClibPDF - www.fastio.com

a standard for operation. After several runs in each mode, it was decided (somewhat arbitrarily) that results with the integrator were not as good as those with the filter. Further testing on various roadways was done with the filter and normal operational modes. Table 3 and Figure 4 show the results of these tests, the values being averages of from 2 to 6 runs each.

Tests were also made to determine what effect slight variation in speed would have. Results are shown in Table 4, each value an average of 3 runs. Also shown are morning and afternoon runs to check on the temperature effect on road roughness on the PCC pavements.

Since the trend is toward smaller cars for State use, it was decided to try the velocity sensor in other vehicles. Those chosen were a 1975 Plymouth Valiant, a 1977 Ford Pinto Pony, and a 1973 Dodge 3/4 ton pickup which was tested both empty and with a load of 900 lbs. Testing of a two-wheeled trailer which could be bought or built to uniform standards was also considered but the idea was discarded. Tables 5, 6 and 7 show the results of these tests.

ClibPDF - www.fastio.com

Discussion

Before an analysis of the data reported here was completed, a mechanical malfunction of the velocity sensor occurred (spring-magnet hangup). After repair, it was found that the gain setting required to trigger the No. 8 counter was 4.0 instead of the 5.0 setting used during the previous testing. The fact that the shift was exactly 1 full revolution of the potentiometer is considered to be only coincidence. The malfunction resulted in some loss of confidence in the new device.

From Table 3 and a plot of the data, there appears to be a fair degree of correlation (except for a few anomolies) between regular Road Meter counts and those obtained through the velocity sensor. One very rough bridge stands out, probably because of the frequency of the roughness.

It can be seen in Table 4 that operating speed is very critical, especially that below the standard speed of 50 mph. The least critical of the three readings appears to be from the velocity sensor in the normal mode. The effect of temperature on pavement roughness did not appear to be significant.

From Table 5, it appears there is a good correlation between the Plymouth station wagon (mechanical counts) and the Valiant (velocity sensor counts). Counts from the normal mode (Valiant) are considerably higher than with the station wagon, (Table 4) however. Figures 5 and 6 also show the excellent correlation between the two vehicles. Data for Figure 6 is not included in tabular form.

The results in Table 6 indicate very little correlation between the Pinto and the station wagon. Test repeatability was very poor.

ClibPDF - www.fastio.com

Tests with the Dodge pickup as shown in Table 7, also indicate little correlation. Again, individual results were fairly widely scattered.

Summary

The limited testing and evaluation of the velocity sensor indicates under specific conditions a reasonable correlation with results of the standard Road Meter. However, the unexplainable malfunction which occurred casts a shadow on its performance. If the device were to be adopted, frequent calibration checks would be required. Results also indicate that the velocity sensor does not significantly reduce effects of vehicle suspension or speed. For these reasons, a change to this device is not recommended. Recent advances in Road Meter technology (as covered in the "State of the Art" portion of this report) appear to have more promise.

On a positive note, one interesting result was shown on the graphical output of the velocity sensor (Figure 3). The higher peaks on the graph occur when the axle of the vehicle crosses faulted pavement joints at approximately 15 ft intervals. Graphs of selected areas might be useful for measuring the degree of faulting of concrete pavements or determining the relative roughness of bridge approaches.

ClibPDF - www.fastio.com

TABLE 1

VELOCITY SENSOR AND ROAD METER RESULTS - 50 MPH
(Station Wagon)

Road 1 (PCC)

Counter No.	Gain 1 Run 1	Gain 1 Run 2	Gain 2 Run 1	Gain 2 Run 2	Gain 3 Run 1	Gain 3 Run 2	Gain 4 Run 1	Gain 4 Run 2	Gain 5 Run 1	Gain 5 Run 2	Mech. Road Meter Run 1	Mech. Road Meter Run 2
1	660	647	847	810	802	854	856	843	889	873	548	542
2	193	209	431	418	645	649	810	808	836	802	209	197
3	27	44	156	146	302	287	455	457	619	617	37	49
4	0	0	32	27	135	123	233	241	364	384	5	7
5			0	0	26	16	109	125	213	232	1	1
6					0	0	42	49	148	167	0	0
7							1	2	37	43		
8							0	0	4	6		
ΣCounts	880	900	1433	1401	1910	1929	2505	2525	3110	3124	1102	1116

Road 2 (PCC)

Counter No.	Gain 1 Run 1	Gain 1 Run 2	Gain 2 Run 1	Gain 2 Run 2	Gain 3 Run 1	Gain 3 Run 2	Gain 4 Run 1	Gain 4 Run 2	Gain 5 Run 1	Gain 5 Run 2	Mech. Road Meter Run 1	Mech. Road Meter Run 2
1	708	690	734	728	742	754	738	757	768	747	630	654
2	537	517	620	622	705	695	734	744	745	734	461	447
3	312	313	457	472	568	582	631	624	681	682	153	148
4	0	0	296	296	458	479	532	529	586	594	28	33
5			0	0	292	307	431	440	507	505	7	11
6					0	0	330	322	458	466	2	4
7							65	82	323	326	1	3
8							0	0	214	229	0	1
ΣCounts	1557	1520	2107	2118	2765	2817	3461	3498	4282	4283	2177	2232

ClibPDF - www.fastio.com

TABLE 1 (Cont'd)

Road 3 (AC) Southbound

Counter No.	Gain 1 Run 1	Gain 1 Run 2	Gain 2 Run 1	Gain 2 Run 2	Gain 3 Run 1	Gain 3 Run 2	Gain 4 Run 1	Gain 4 Run 2	Gain 5 Run 1	Gain 5 Run 2	Mech. Road Meter Run 1	Mech. Road Meter Run 2
1	NOT		1003	977	1048	1047	1052	1123	1123	1112	389	382
2	MADE		270	341	797	838	981	1056	1026	1036	121	126
3			20	23	96	166	403	346	732	742	31	30
4			3	4	16	25	85	57	246	237	7	5
5			0	0	3	4	21	10	44	63	1	0
6					0	0	7	4	30	26	0	
7							0		5	5		
8									1	3		
ΣCounts			1296	1345	1960	2080	2549	2596	3207	3224	757	744

Road 3 (AC) Northbound

Counter No.	Gain 1 Run 1	Gain 1 Run 2	Gain 2 Run 1	Gain 2 Run 2	Gain 3 Run 1	Gain 3 Run 2	Gain 4 Run 1	Gain 4 Run 2	Gain 5 Run 1	Gain 5 Run 2	Mech. Road Meter Run 1	Mech. Road Meter Run 2
1	NOT		994	996	1038	1017	1079	1139	1171	1157	300	311
2	MADE		280	289	819	809	1026	1059	1066	1057	73	70
3			12	17	125	109	319	339	686	722	15	14
4			3	1	17	14	39	40	144	159	2	3
5			0	0	2	3	6	5	27	25	1	1
6					0	0	1	1	9	8	0	0
7							0	0	1	1		
8									1	1		
Counts			1289	1303	2001	1952	2470	2583	3105	3130	504	510

ClibPDF - www.fastio.com

TABLE 2

VELOCITY SENSOR AND ROAD METER RESULTS - 25 MPH
(Station Wagon)

Road 1 (PCC)

Counter No.	Gain 1	Gain 2	Gain 3	Gain 4	Gain 5	Mech. Road Meter
1	392	924	1021	1139	1226	478
2	10	73	479	1133	1222	58
3	0	3	35	114	391	2
4		0	3	11	51	
5			0	3	9	
6				1	4	
7					1	
8					1	
ΣCounts	402	1000	1538	2401	2885	600

Road 2 (PCC)

Counter No.	Gain 1	Gain 2	Gain 3	Gain 4	Gain 5	Mech. Road Meter
1	903	1244	1294	1388	1429	841
2	324	493	958	1385	1414	200
3	116	262	401	563	882	21
4	0	77	264	346	443	1
5		0	100	260	318	
6			0	142	283	
7				1	139	
8				0	46	
ΣCounts	1343	2076	3017	4085	4954	1308

ClibPDF - www.fastio.com

TABLE 3

MODIFIED VELOCITY SENSOR VS. ROAD METER 50 MPH
(Station Wagon)

Roadway	Mechanical Road Meter ΣCounts	Velocity Sensor ΣCounts - Gain 5.0		
		Filter	Normal	Integrator
1 AC	570	475	2872	
2 AC	760	542	3022	
3 PCC	980	998	2807	1041
4 AC	1083	610	2885	
5 AC	1110	660	2910	
6 PCC	1110	1140	3565	
7 AC	1295	1200	3765	
8 AC	1560	1530	3900	
9 Br	1628	1172	2470	
10 PCC	1650	2160	3900	
11 PCC	1655	2201	3775	
12 PCC	1900	2750	4115	
13 PCC	1965	2460	3940	
14 PCC	2060	2425	4075	
15 PCC	2065	2637	3854	3020
16 PCC	2165	3515	4420	
17 PCC	2218	2268	3875	
18 PCC	2697	3988	4470	
19 Br	7094	3010	4400	

ClibPDF - www.fastio.com

TABLE 4

Effect of Speed and Temperature - Speed in MPH
(Station Wagon)

Roadway	Mechanical Road Meter ΣCounts			Velocity Sensor ΣCounts - Gain 5.0					
				Filter			Normal		
Speed	45	50	55	45	50	55	45	50	55
1 (AM)	763	967	994	593	1025	1066	2843	2874	2819
1 (PM)	705	955	1043	583	905	1060	2957	2840	2858
2 (AM)	1611	2075	1950	2110	2643	2465	3920	3900	3874
2 (PM)	1630	2145	2068	2073	2668	2750	3973	3955	3958

ClibPDF - www.fastio.com

TABLE 5

1975 Plymouth Valiant vs. Plymouth Station Wagon

	Station Wagon			Plymouth Valiant Velocity Sensor - Gain 5.0					
Roadway	Mechanical ΣCounts			Filter			Normal		
Speed	45	50	55	45	50	55	45	50	55
1 PCC	763	967	994	1089	1253	1528	6544	6370	5843
2 PCC	1611	2075	1950	2897	2842	3060	7478	7283	6546
3 PCC		2060			3029			6811	
4 PCC		1650			2870			6425	
5 PCC		1900			2999			6686	
6 PCC		1965			2841			6931	
7 PCC		2165			3550			6016	
8 PCC		2697			3900			6880	
9 PCC		2218			2525			5841	
10 PCC		1655			2470			6592	
11 AC		570			1180			-	
12 AC		760			1160			-	

ClibPDF - www.fastio.com

TABLE 6

1977 Pinto Pony vs. Plymouth Station Wagon

Roadway	Station Wagon Mechanical ΣCounts			Pinto Pony Velocity Sensor - Gain 5.0 Filter			Pinto Pony Velocity Sensor - Gain 5.0 Normal		
Speed	45	50	55	45	50	55	45	50	55
1 (AM)	763	967	994	1750	1380	1425	12650	10075	8220
1 (PM)	705	955	1043	1255	1475	1255	-	-	-
2 (AM)	1611	2075	1950	2460	2615	2555	11300	8920	8100
2 (PM)	1630	2145	2068	2550	2780	2790	-	-	-
3 (AC)		-			1890			9050	
4 (PCC)		2165			2910			8975	
5 (PCC)		2697			3530			8720	
6 (PCC)		2218			2150			8500	
7 (AC)		570			690			9490	
8 (AC)		760			910			11135	

ClibPDF - www.fastio.com

TABLE 7

1977 Dodge Pickup vs. Plymouth Station Wagon

Roadway	Station Wagon Mechanical ΣCounts			73 Dodge Pickup (Unloaded) Velocity Sensor - Gain 5.0 Filter			Normal		
Speed	45	50	55	45	50	55	45	50	55
1	763	967	994	1315	2140	2280	5830	5000	4805
2	1611	2075	1950	2740	3665	3315	5485	5035	5000
				Dodge Pickup Loaded w/900 lbs.					
1				1115	1690	2310	7055	5230	4875
2				2590	3430	3630	6515	5135	5020

ClibPDF - www.fastio.com

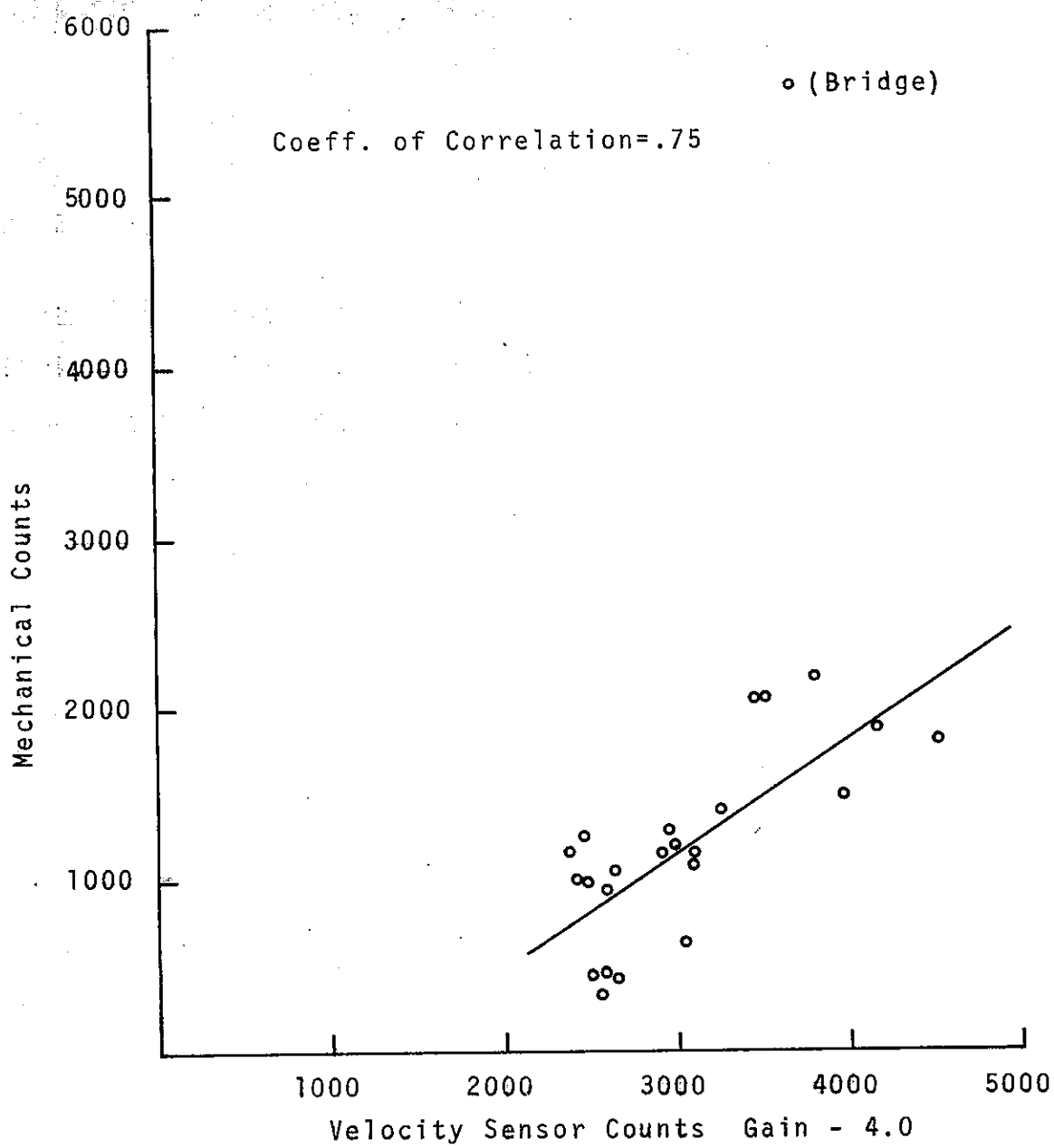

Fig. 1
Mechanical Device vs. Velocity Sensor 50 MPH

ClibPDF - www.fastio.com

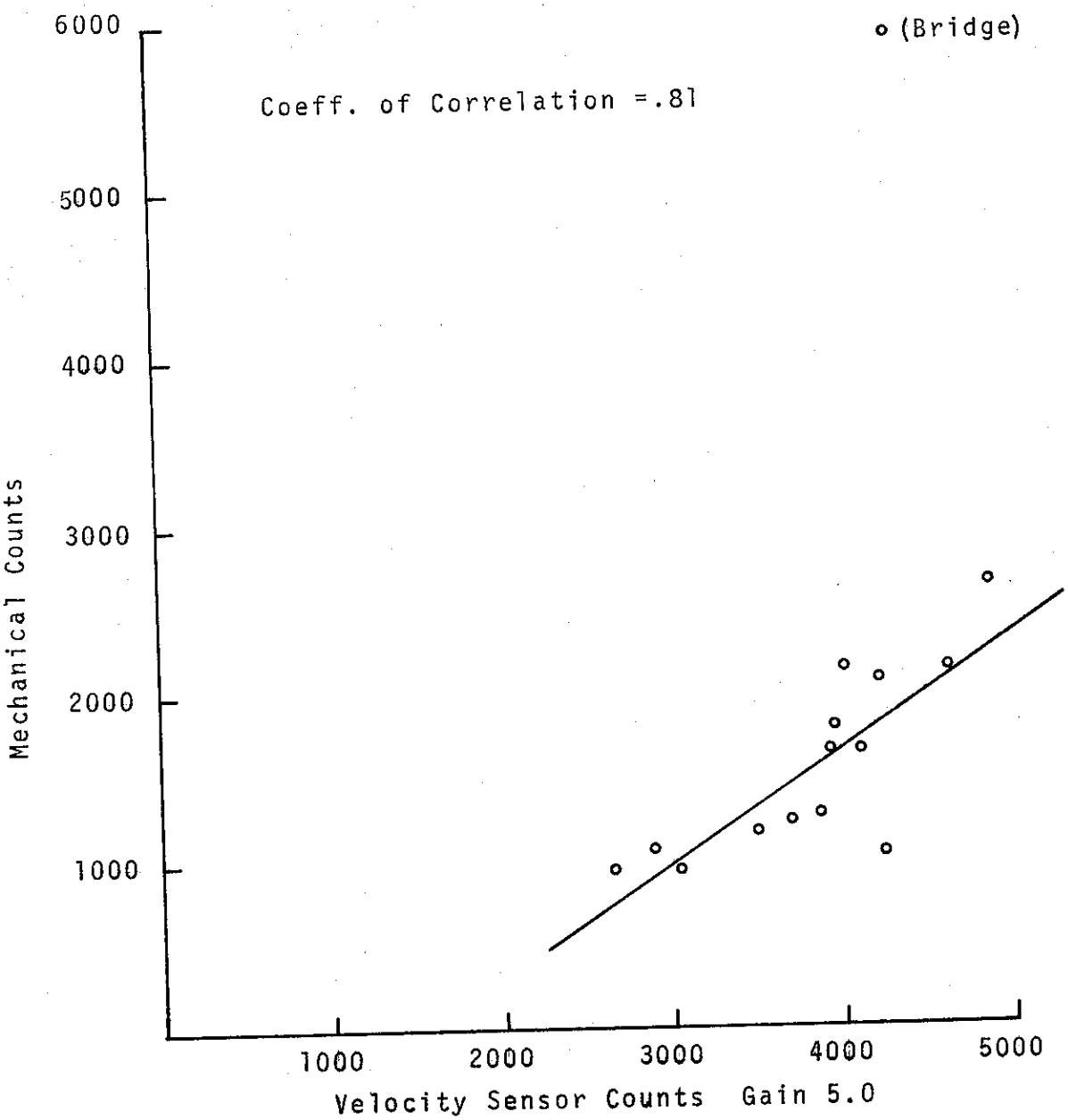

Fig. 2
Mechanical Device vs. Velocity Sensor 50 MPH

ClibPDF - www.fastio.com

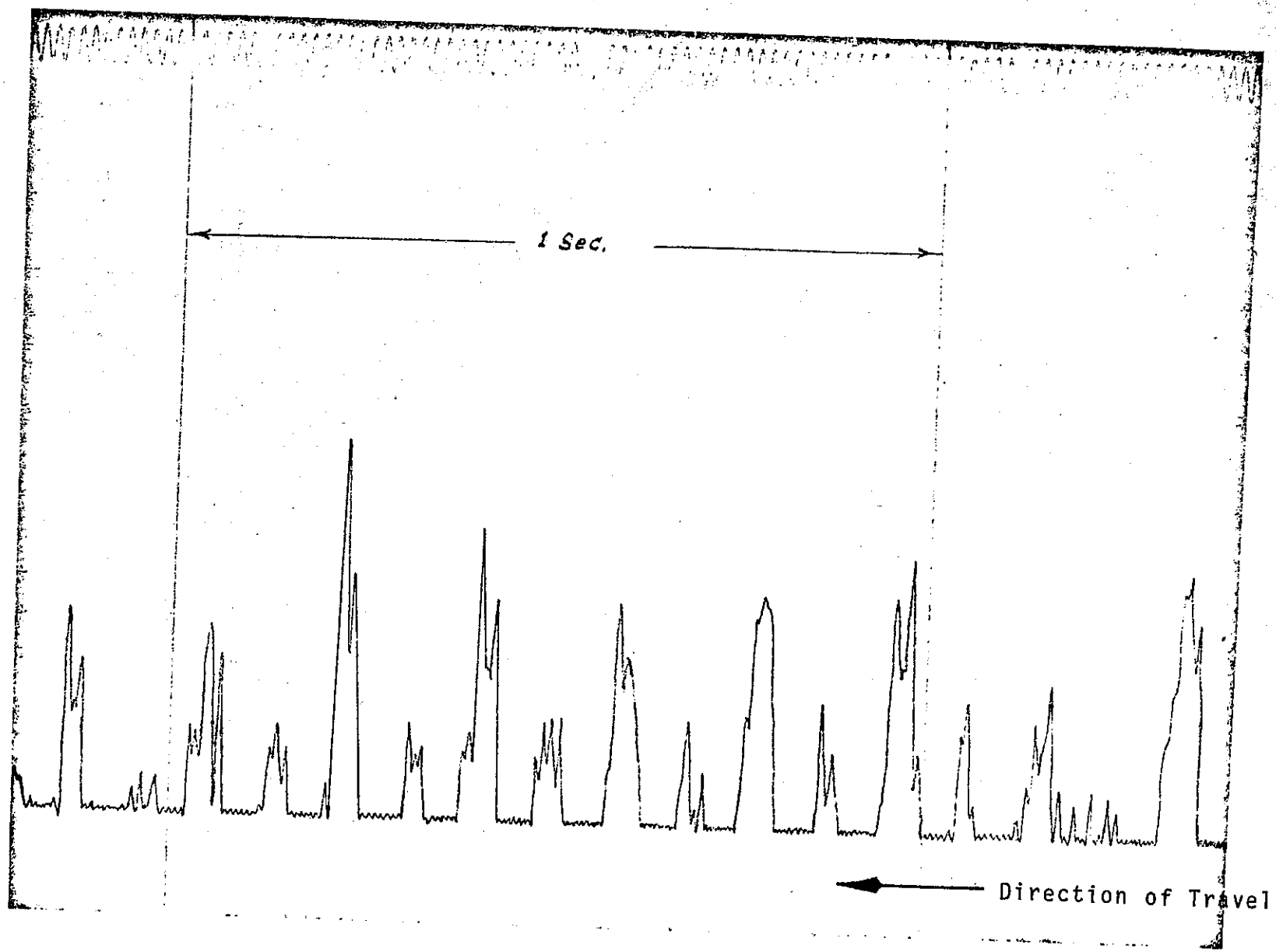

Fig. 3
Oscillograph of Velocity Sensor Output 50 MPH

ClibPDF - www.fastio.com

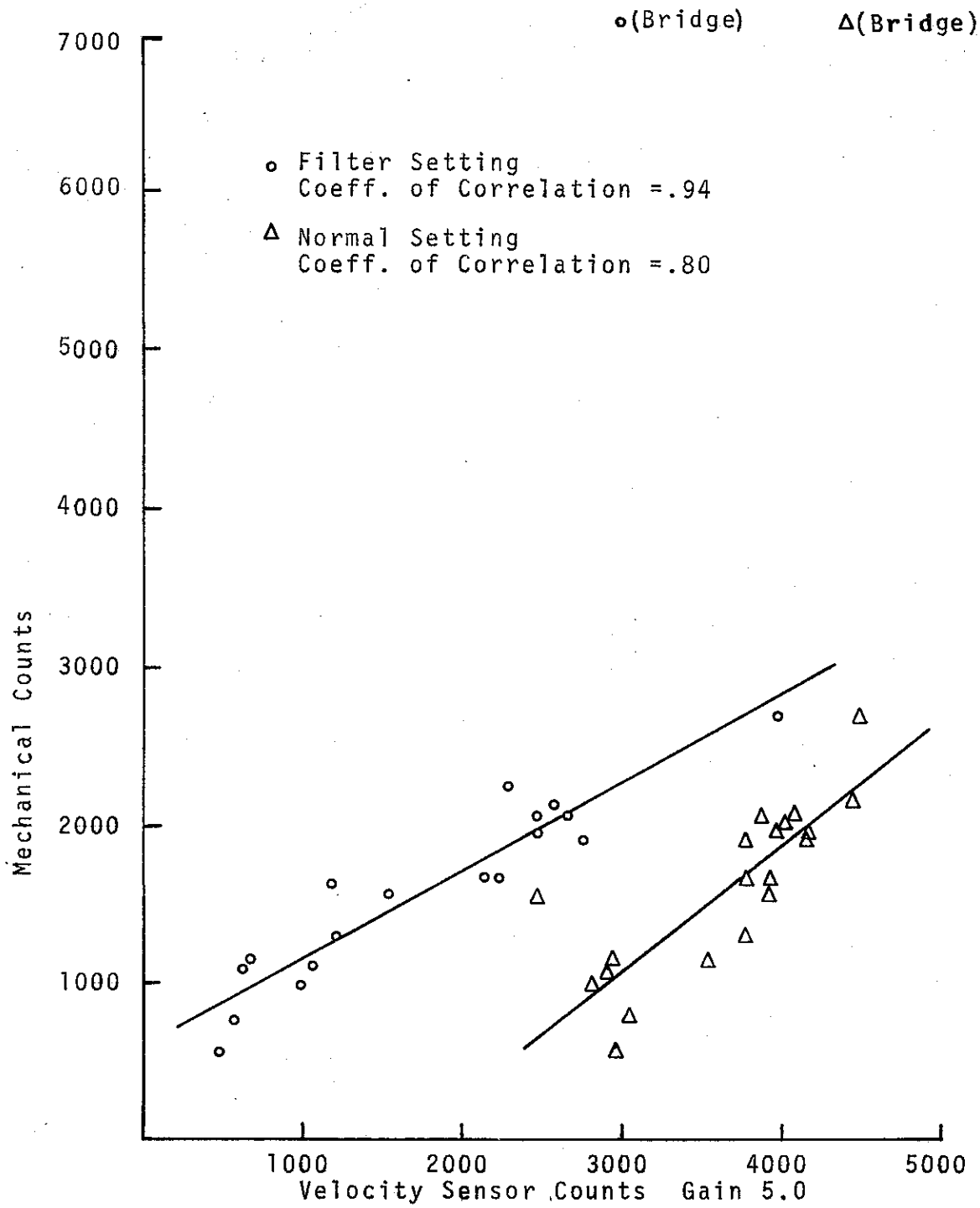

Fig. 4
Mechanical Device vs. Velocity Sensor 50 MPH

ClibPDF - www.fastio.com

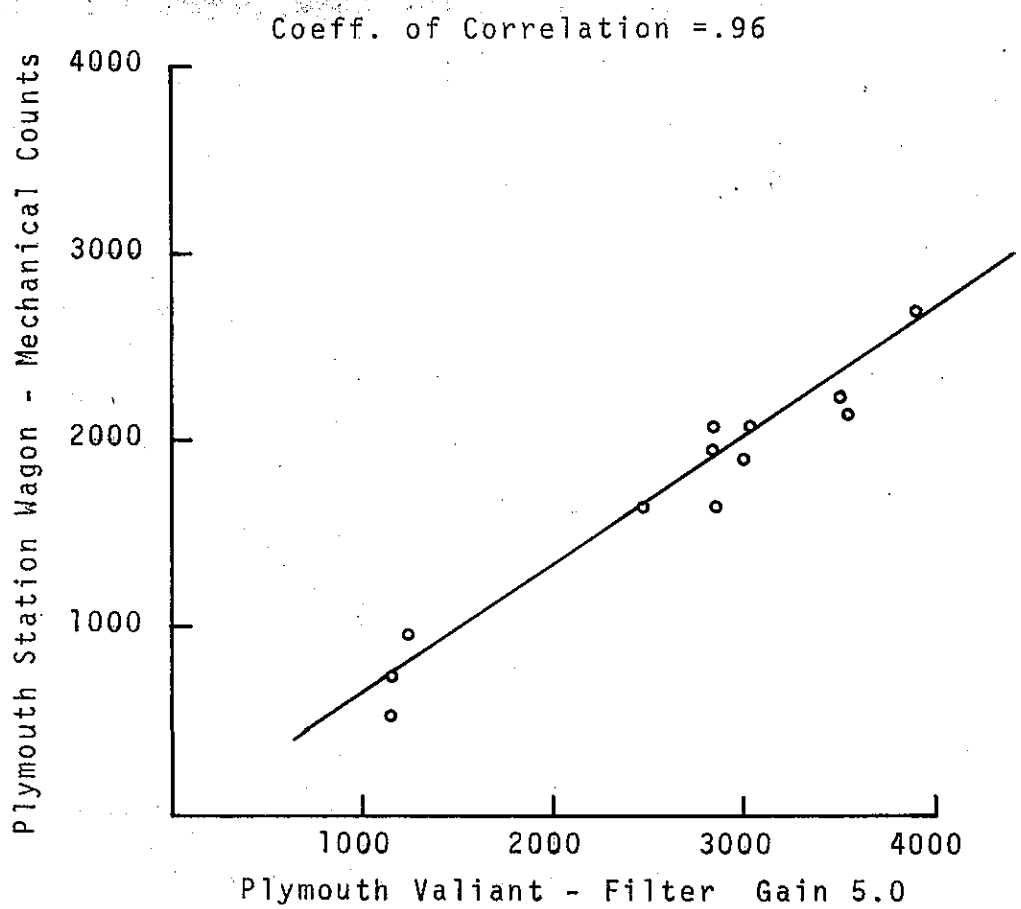

Fig. 5
Station Wagon vs. Valiant 50 MPH

ClibPDF - www.fastio.com

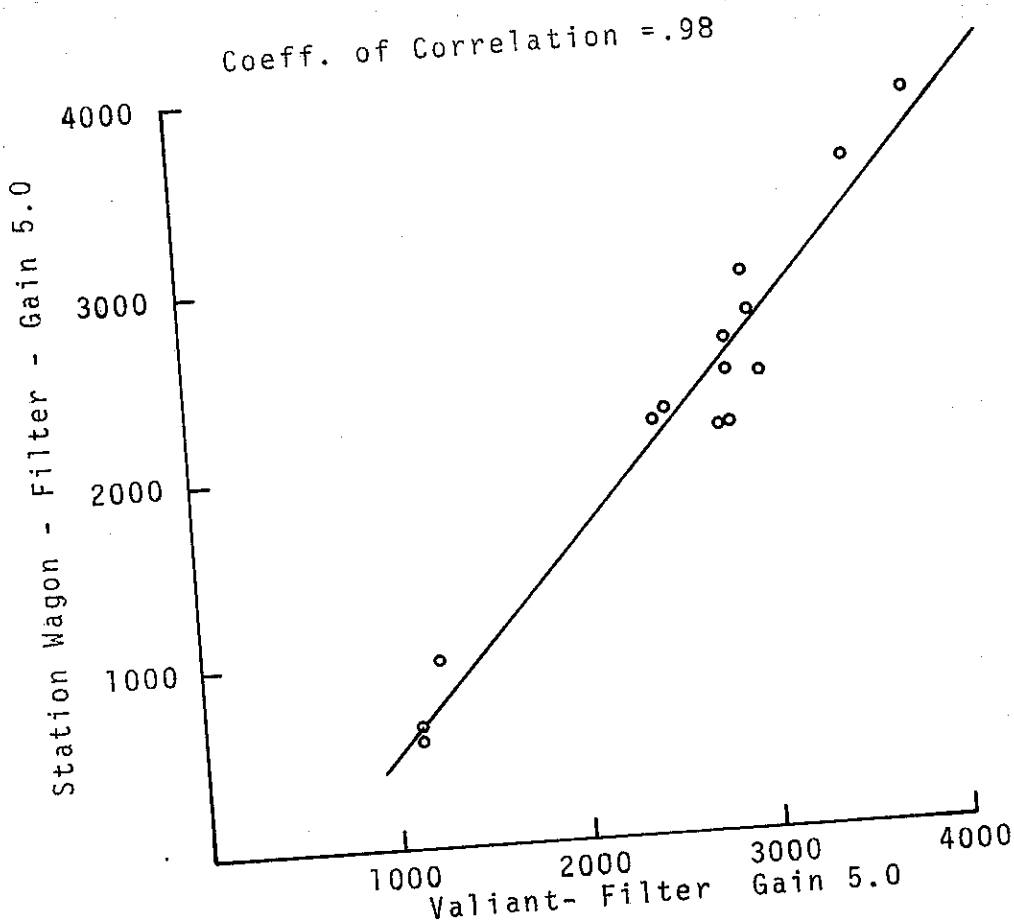

Fig. 6
Station Wagon vs. Valiant 50 MPH

ClibPDF - www.fastio.com

CALIBRATION METHODS

For calibration purposes, many agencies use selected portions of pavements or bridge structures as "standard" test roads. Unfortunately, such roadways are subject to change in roughness due to aging, usage and climatic conditions. The Road Meters and test vehicles are also subject to change. The need for a time-stable calibration device is widely recognized. Researchers at the University of Michigan are presently investigating various calibration methods under NCHRP Project 1-18. Dr. Thomas Gillespie is the principal investigator.

A literature search revealed only one other item of research on Road Meter calibration, that being in Quebec, Canada. A copy of an unpublished report by J. Hode Keyser of the University of Montreal was obtained for evaluation of the method developed in that study.

Their method involves the use of models of calibration roads. Models are created by using standardized rubber pads of varying lengths and thicknesses to simulate pavement surfaces with different riding qualities. In practice, a smooth section of road is selected and run with the Road Meter. Various models are placed on the roadway (one at a time) and run with the Road Meter. The roughness of the model is determined by subtracting the original measurement from those of the individual calibration models.

This method would solve the problems of "standard" roads which were previously listed. Two disadvantages which come to mind are handling and storing of mats (up to 236 inches long) and finding a smooth stretch of road which can be closed to traffic periodically. An agency owned test track would be the most satisfactory.

ClibPDF - www.fastio.com

At some time in the past, someone reported on a calibration device based on a buried drum which could be fitted with plates of various thicknesses to create "bumps". The use is similar to dynamometers for checking speedometers. When we decided to try similar equipment, the reference material could not be located, so we started from scratch.

On the first attempt, available 18 inch diameter pipe was used. This proved to be unsatisfactory because of the bump frequency of about 15 Hz. A 36 inch diameter pipe was then purchased and built into a rotating drum. A special hub was designed to allow adjustment from circular to eccentric motion developing up to 3/4 inch bumps (see sketch in Figure 7). The drum was placed in the ground so that the rear wheels of a vehicle could rest on the top surface at ground level.

This device provided the anticipated roughness, but further troubles developed. With the laboratory Road Meter equipment and a 1/2 inch excursion set on the drum, only a speed of 30 MPH (4.7 Hz.) registered that amount of roughness. Between 1.5 and 3 Hz. and above 5 Hz., there appeared to be harmonic frequencies occurring which resulted in erratic counter readings. On investigation with a stroboscope, these were shown to be resonant frequencies causing the translator "card" to vibrate so fast that the mechanical counters (35 Hz.) could not keep up. At 50 MPH (about 8 Hz.) the card excursion was over 2 inches instead of the 1/2 inch set on the drum. (In the NCHRP study, Dr. Gillespie recently reported similar findings with car body resonance at 1.5 Hz. and rear axle resonance at 8.5 Hz.)

ClibPDF - www.fastio.com

Our road inventory system uses Road Meters of a different type with electronic counters and without the card and spring translator, mounted in the smaller Plymouth Valiants. Test results with one of these cars were more encouraging. Two cars with widely different response characteristics were obtained for further testing.

A number of test runs with rear wheels on the rotating drum were made with each vehicle at various speeds and with eccentric settings to provide displacements of 0, 1/4 inch and 1/2 inch. The "0" setting proved satisfactory with no counts registered with either car. After obtaining the data, the question arose as to how best analyze them. The standard method of reduction is shown in the top portion of Table 8. Since the calibration device should have only one size bump, it was decided that individual deviations or excursions should be meaningful. The lower portion of Table 8 shows the method of determining individual excursions as proven by Brokaw (2). Also shown is a further extension of the data to show total inches of movement due to each increment and the projected inches of movement per mile.

Tables 9 through 11 show typical results with an eccentric setting for a 1/4 inch excursion at speeds of 30, 40 and 50 MPH. Tables 12 through 14 show the same speeds but with a 1/2 inch excursion. The tables clearly show the difference between cars that are supposedly equipped with the same tires and shock absorbers. A slight dampening effect is noted at 30 MPH and resonance is evident at 50 MPH.

ClibPDF - www.fastio.com

With a 36 inch diameter drum, there are 560 revolutions per mile. For a 1/4 inch excursion, the total movement per mile should be 140 inches and at a 1/2 inch setting, 280. The makeup of 1/4 inch excursions indicates the proper number being recorded, but at 1/2 inch, the signals are doubled with what appears to be two distinct bumps of different magnitudes. This has not been investigated in any depth, however, it could be the minus excursion following the bump even though Brokaw assumed equal positive and negative deviations.

Table 15 summarizes the ratios of results of car 4494 compared to 4476. The widely divergent results leaves much to be desired. Obviously, more work needs to be done. Unfortunately, due to constraints of manpower, as well as time and funds, further work under this project will not be possible. Also, Road Meter equipment was dismantled from the vehicles before any analysis could be completed. Results of these tests are being furnished to Dr. Gillespie for his NCHRP study (Project 1-18) in the hopes that it will help him in his development of a calibration device.

ClibPDF - www.fastio.com

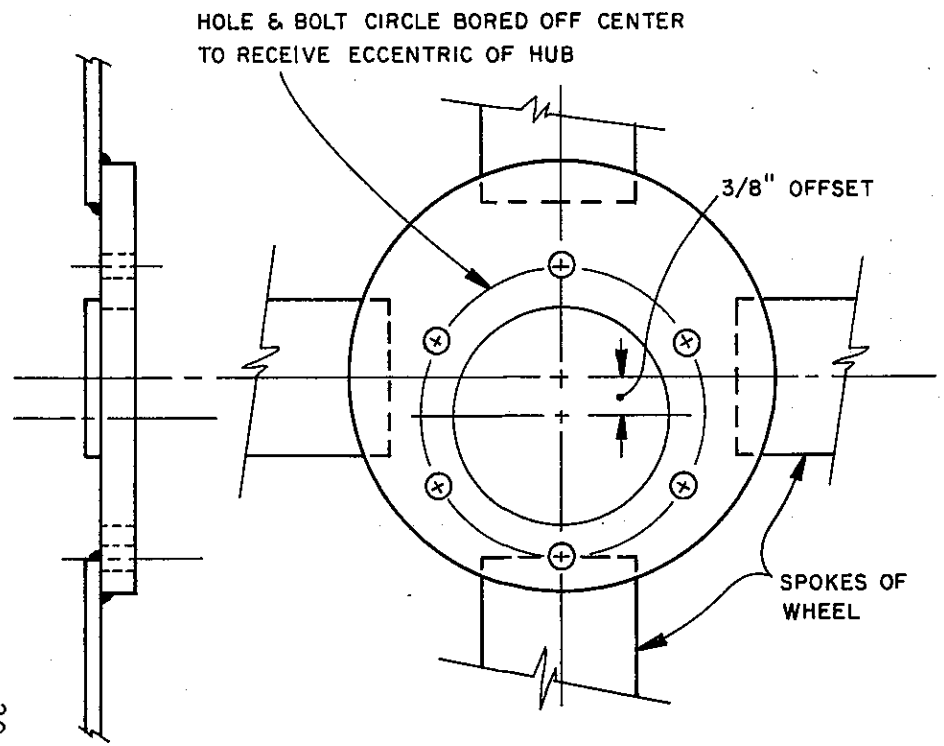

WHEEL CENTER SECTION

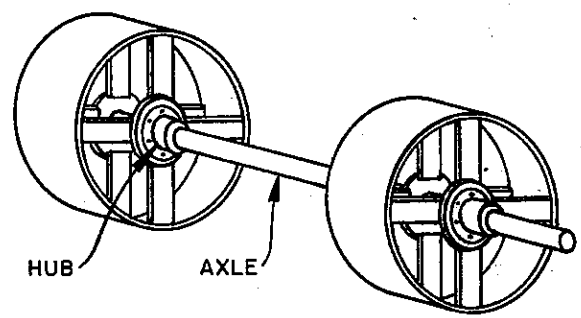

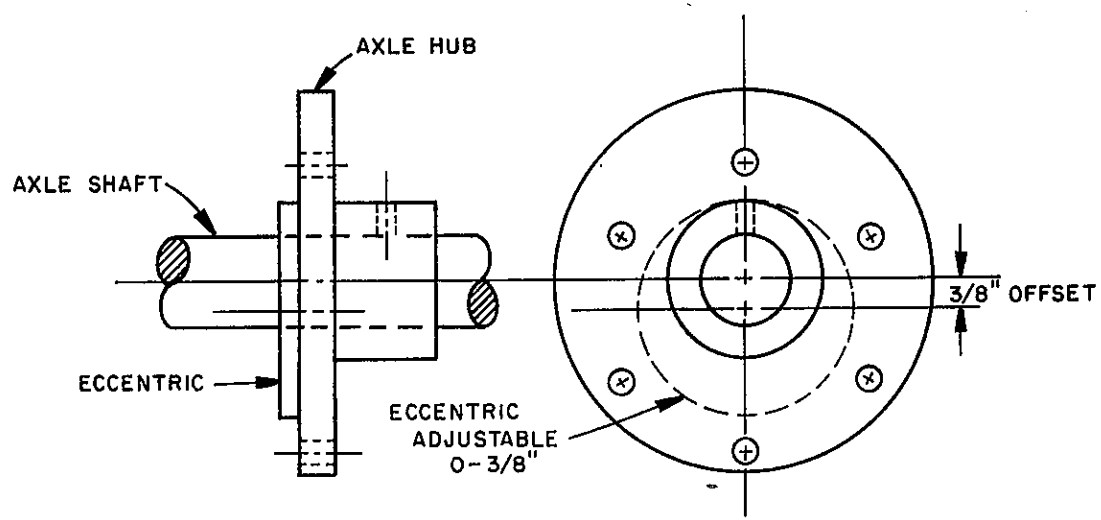

AXLE HUB

FIGURE 7

STEEL DRUM CALIBRATION DEVICE
36 IN. O.D.

ClibPDF - www.fastio.com

TABLE 8

Typical Data Reduction Methods

Counter		No. Counts	
1	x	598	598
2	x	251	502
3	x	60	180
4	x	13	52
5	x	6	30
6	x	4	24
7	x	2	14
8	x	0	0
		Sum	1400
		Length	.918 mi.
		Sum/L	1525

Makeup of Individual Excursions			Inches
598-102-(2 x 149)	=	198 x 1/8	24.75
251-18-(2 x 42)	=	149 x 2/8	37.25
60-8-(2 x 5)	=	42 x 3/8	15.75
13-(2 x 2)-(2 x 2)	=	5 x 4/8	2.5
6-(2 x 2)	=	2 x 5/8	1.25
4-(2 x 2)-(2 x 0)	=	0	0
2-(2 x 0)	=	2 x 7/8	1.75
0	=	0	0
	Sum	398	83.25
	Length	.918 mi.	
	Sum/L	434	91

Note: See Appendix for Brokaw's explanation of data reduction.

ClibPDF - www.fastio.com

TABLE 9

Calibration Tests

Speed 30 MPH 1/4 Inch Excursion

Car 4476

Counter	No.	Excursion Makeup	Inches
1	340	0	42.75
2	171	171	
3	0	0	
L = .301 Mi.			
Sum/L	2266	568	142

Car 4494

Counter	No.	Excursion Makeup	Inches
1	282	282*	35.25
2	0	0	
3	0	0	
L = .300 Mi.			
Sum/L	940	940*	118

*Probably the signal exceeds the magnitude of 1/8 inch and goes back and forth through "1" without registering on another counter.

ClibPDF - www.fastio.com

TABLE 10

Calibration Tests

Speed 40 MPH 1/4 Inch Excursion

Car 4476

Counter	No.	Excursion Makeup	Inches
1	456	0	0
2	416	40	10
3	188	188	70.5
4	0	0	
L = .402 Mi.			
Sum/L	4607	567	200

Car 4494

Counter	No.	Excursion Makeup	Inches
1	446	0	
2	223	223	55.75
3	0	0	
4	0	0	
L = .399 Mi.			
Sum/L	2236	559	140

ClibPDF - www.fastio.com

TABLE 11

Calibration Tests

Speed 50 MPH 1/4 Inch Excursion

Car 4476

Counter	No.	Excursion Makeup	Inches
1	458	0	
2	569	0	
3	569	1	0.38
4	284	284	142
5	0	0	
L = .500 Mi.			
Sum/L	8878	570	285

Car 4494

Counter	No.	Excursion Makeup	Inches
1	553	0	0
2	374	190	47.5
3	92	92	34.5
4	0	0	
5			
L = .503 Mi.			
Sum/L	3135	561	163

ClibPDF - www.fastio.com

TABLE 12

Calibration Tests

Speed 30 MPH 1/2 Inch Excursion

Car 4476

Counter	No.	Excursion Makeup	Inches	In./Mi.
1	677	0	0	
2	508	168	42	(140)
3	170	170	63.75	(213)
4	0	0	0	
L = .300 Mi.				
Sum/L	7340	1127		353

Car 4494

Counter	No.	Excursion Makeup	Inches	In./Mi.
1	664	8	1	
2	497	161	40	(136)
3	168	168	63	(209)
4	0	0	0	
L = .301 Mi.				
Sum/L	7183	1120		345

ClibPDF - www.fastio.com

TABLE 13

Calibration Tests

Speed 40 MPH 1/2 Inch Excursion

Car 4476

Counter	No.	Excursion Makeup	Inches	In./Mi.
1	912	6	0.75	(141)
2	682	224	56	
3	458	0	0	
4	232	226	113	(286)
5	3	3	1.9	
6	0	0	0	
L = .402 Mi.				
Sum/L	11,425	1142		427

Car 4494

Counter	No.	Excursion Makeup	Inches	In./Mi.
1	865	31	3.8	(130)
2	641	193	48.2	
3	395	53	19.9	(263)
4	171	171	85.5	
5	0	0	0	
6	0			
L = .401 Mi.				
Sum/L	10,014	1117		393

ClibPDF - www.fastio.com

TABLE 14

Calibration Tests

Speed 50 MPH 1/2 Inch Excursion

Car 4476

Counter	No.	Excursion Makeup	Inches	In./Mi.
1	1146	0	0	
2	869	277	69.25	(145)
3	582	10	3.75	
4	572	0	0	
5	572	0	0	
6	358	214	160.5	(444)
7	72	72	63	
8	0	0	0	
L = .503 Mi.				
Sum/L	24,692	1139		589

Car 4494

Counter	No.	Excursion Makeup	Inches	In./Mi.
1	1117	0	0	
2	838	280	70	(140)
3	558	0	0	
4	523	35	17.5	
5	244	244	152.5	(340)
6	0	0	0	
7	0	0	0	
8	0	0	0	
L = .500 Mi.				
Sum/L	15,558	1118		480

ClibPDF - www.fastio.com

TABLE 15

Ratio of Results - Car 4494 to 4476

1/4 Inch Excursion

	ΣCounts	Total In./Mi.
30 MPH	0.41	0.83
40 MPH	0.49	0.70
50 MPH	0.35	0.57

1/2 Inch Incursion

30 MPH	0.98	0.98
40 MPH	0.88	0.92
50 MPH	0.63	0.81

2 Test Tracks @ 50 MPH

No. 1 Smooth	0.45	0.58
No. 2 Rougher	0.66	0.65
Average	0.59	0.63

ClibPDF - www.fastio.com

REFERENCES

1. F. N. Hveem, Devices for Recording and Evaluating Pavement Roughness, HRB Bulletin 264 (1960).

2. Highway Research Record No. 189, 1967, pp. 137-149.

3. Special Report 133, 1973, Pavement Evaluation Using Road Meters.

4. Report No. FHWA-RD-73-54, Road Roughness Technology, State of the Art, G. G. Bolmer, December, 1973.

5. R. J. Weaver and J. M. Newman, The Dream versus the Reality of a Pavement Management System, PMS workshop in Olympia, Washington, November 8-11, 1977.

6. A. J. Scala and D. W. Potter, Measurement of Road Roughness, Australian Road Research Board Technical Manual No. 1, March, 1977.

ClibPDF - www.fastio.com

Appendix

ROAD METER THEORY

The PCA Road Meter measures the number of road-car deviations in ±⅛-in. increments referenced to the standing position of the automobile. Numbers are accumulated in electric counters. Sum of squares of deviations, $\Sigma(D^2)$, has been correlated with slope variance from the CHLOE Profilometer. The method for reducing Road Meter data is shown in the following.

1. Basic Data for Sum of Squares

Let a, b, c, d, e, f, ... = number of road-car deviations corresponding to ±1, 2, 3, 4, 5, 6, ... eighths of an inch, respectively. Then,

$$\Sigma(D^2) = (1a + 4b + 9c + 16d + 25e + 36f + \ldots)/64 \qquad (1)$$

2. Composition of Road Meter Counts

Because electric counters record once for a maximum deviation and twice for segment numbers less than the maximum, total recorded counts are

$$\begin{aligned}
\text{Counter 1 } (\tfrac{1}{8}\text{ in.}) &= a + 2b + 2c + 2d + 2e + 2f + \ldots \\
\text{Counter 2 } (\tfrac{2}{8}\text{ in.}) &= \phantom{a +{}} b + 2c + 2d + 2e + 2f + \ldots \\
\text{Counter 3 } (\tfrac{3}{8}\text{ in.}) &= \phantom{a + b +{}} c + 2d + 2e + 2f + \ldots \\
\text{Counter 4 } (\tfrac{4}{8}\text{ in.}) &= \phantom{a + b + c +{}} d + 2e + 2f + \ldots \\
\text{Counter 5 } (\tfrac{5}{8}\text{ in.}) &= \phantom{a + b + c + d +{}} e + 2f + \ldots \\
\text{Counter 6 } (\tfrac{6}{8}\text{ in.}) &= \phantom{a + b + c + d + e +{}} f + \ldots
\end{aligned}$$

3. Reduction of Road Meter Counts to $\Sigma(D^2)$

If recordings shown in Road Meter counters 1, 2, 3, 4, 5, 6, ... are multiplied by the integers 1, 2, 3, 4, 5, 6, ..., respectively, the following reduction and summation can be made:

$$\begin{aligned}
\text{Counter 1} &= a + 2b + 2c + 2d + 2e + 2f + \ldots \\
\text{Counter 2} &= \phantom{a +{}} 2b + 4c + 4d + 4e + 4f + \ldots \\
\text{Counter 3} &= \phantom{a + 2b +{}} 3c + 6d + 6e + 6f + \ldots \\
\text{Counter 4} &= \phantom{a + 2b + 3c +{}} 4d + 8e + 8f + \ldots \\
\text{Counter 5} &= \phantom{a + 2b + 3c + 4d +{}} 5e + 10f + \ldots \\
\text{Counter 6} &= \phantom{a + 2b + 3c + 4d + 5e +{}} 6f + \ldots \\
\hline
\Sigma(D^2) &= (a + 4b + 9c + 16d + 25e + 36f + \ldots)/64 \qquad (2)
\end{aligned}$$

Eq. 2 = Eq. 1.

ClibPDF - www.fastio.com

4. Sample Calculation

Road Meter count from one-mile survey of rigid pavement:

Counter 1 = 348
Counter 2 = 180
Counter 3 = 40
Counter 4 = 14
Counter 5 = 7
Counter 6 = 2
Counter 7 = 0 (extrapolated)

Composition of Road Meter count:

$\Sigma \frac{7}{8}$ in. deviations = 0
$\Sigma \frac{6}{8}$ in. deviations = $2 - (2 \times 0) = 2$
$\Sigma \frac{5}{8}$ in. deviations = $7 - (2 \times 2) = 3$
$\Sigma \frac{4}{8}$ in. deviations = $14 - (2 \times 2) - (2 \times 3) = 4$
$\Sigma \frac{3}{8}$ in. deviations = $40 - (2 \times 2) - (2 \times 3) - (2 \times 4) = 22$
$\Sigma \frac{2}{8}$ in. deviations = $180 - (2 \times 2) - (2 \times 3) - (2 \times 4) - (2 \times 22) = 118$
$\Sigma \frac{1}{8}$ in. deviations = $348 - (2 \times 2) - (2 \times 3) - (2 \times 4) - (2 \times 22) - (2 \times 118) = 50$

Sum of squares of deviations:

$$\Sigma(\tfrac{6}{8})^2 = 2 \times 36 = 72/64$$
$$\Sigma(\tfrac{5}{8})^2 = 3 \times 25 = 75/64$$
$$\Sigma(\tfrac{4}{8})^2 = 4 \times 16 = 64/64$$
$$\Sigma(\tfrac{3}{8})^2 = 22 \times 9 = 198/64$$
$$\Sigma(\tfrac{2}{8})^2 = 118 \times 4 = 472/64$$
$$\Sigma(\tfrac{1}{8})^2 = 50 \times 1 = 50/64$$
$$\Sigma(D^2) = 931/64 = 14.6 \qquad (1)$$

Direct reduction of Road Meter counts:

Counter 1 = 348 × 1 = 348
Counter 2 = 180 × 2 = 360
Counter 3 = 40 × 3 = 120
Counter 4 = 14 × 4 = 56
Counter 5 = 7 × 5 = 35
Counter 6 = 2 × 6 = 12

$$\Sigma(D^2) = 931/64 = 14.6 \qquad (2)$$

ClibPDF - www.fastio.com

ClibPDF - www.fastio.com