BILL OF MATERIALS

ITEM	QTY	DESCRIPTION
101	1	ASSY C/O ITEMS 102-111
102	2	3/8 - 24 ROD ENDS MCMASTER # 2458K341
103	1	3/8 × .065WALL × 2 5/8 SEAMLESS TUBE
104	1	3/8 × .065WALL × 19 1/4 SEAMLESS TUBE
105	1	1 1/4 - 12 NF NUT
106	1	1 1/4 DIA × 1 LG CR STL RND STK
107	1	1 3/8 DIA × 3/8 LG CR STL RND STK
108	1	1 3/8 OD × .065W × 8 LG STD RND DOM TUBG
109	1	1 DIA × 1/2 LG CR STL RND STK
110	1	1 1/4 OD × .125W × 9 LG STD RND DOM TUBG
111	3	3/8 - 24 NF JAM NUT STEEL MCMASTER # 94846A515

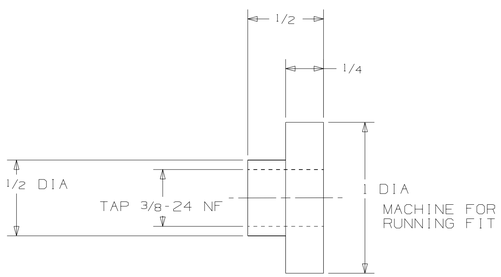

ITEM 109

SCALE: 2:1

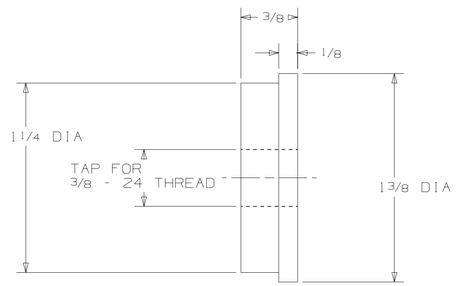

ITEM 107

SCALE: 2:1

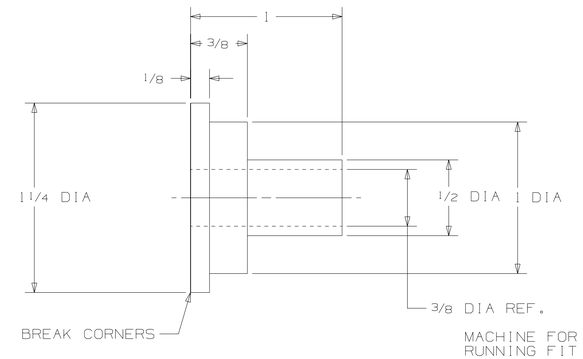

ITEM 106

SCALE: 2:1

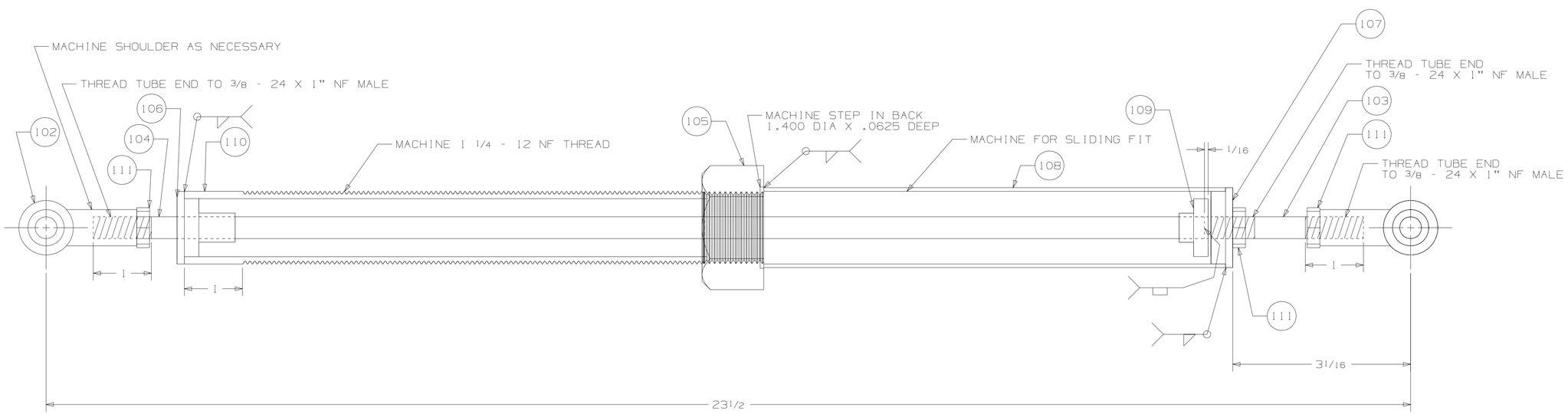

ASSY 101

SCALE: FULL

PROTOTYPE

REV		DESCRIPTION	BY

NEXT ASSEMBLY

TOLERANCE-UNLESS OTHERWISE SPECIFIED
DECIMAL ±
FRACTIONAL ±
ANGULAR ±
DRILLED HOLES ±
REAMED HOLES ±

STATE OF CALIFORNIA
DIVISION OF EQUIPMENT

DIVISION OF EQUIPMENT

INTERNATIONAL TRUCK 5500
WIPER LINK SPRING HOUSING

SCALE: AS NOTED	DATE: 4/27/2006	X-IH5500-SPRING BODY
DRAWN: JOHNSON	DESIGNED: ENG DESIGN	
CHECKED	APPROVED	SHEET 1 OF 1 SHEETS