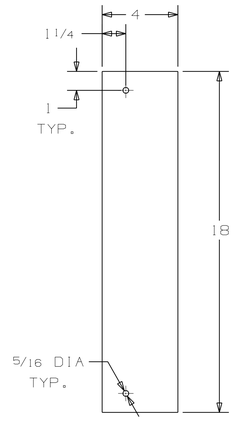

ITEM 103

(ADJUST IF REQUIRED)

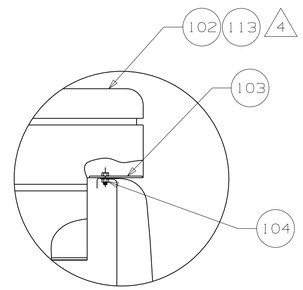

DETAIL A

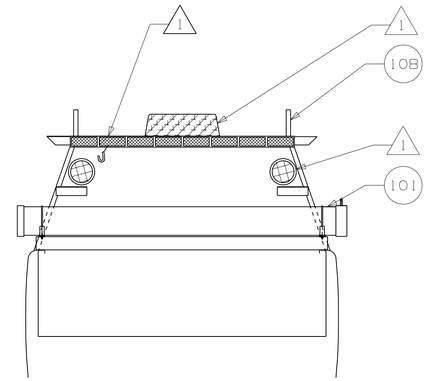

SIGN CARRIER INSTALLATION

REAR VIEW

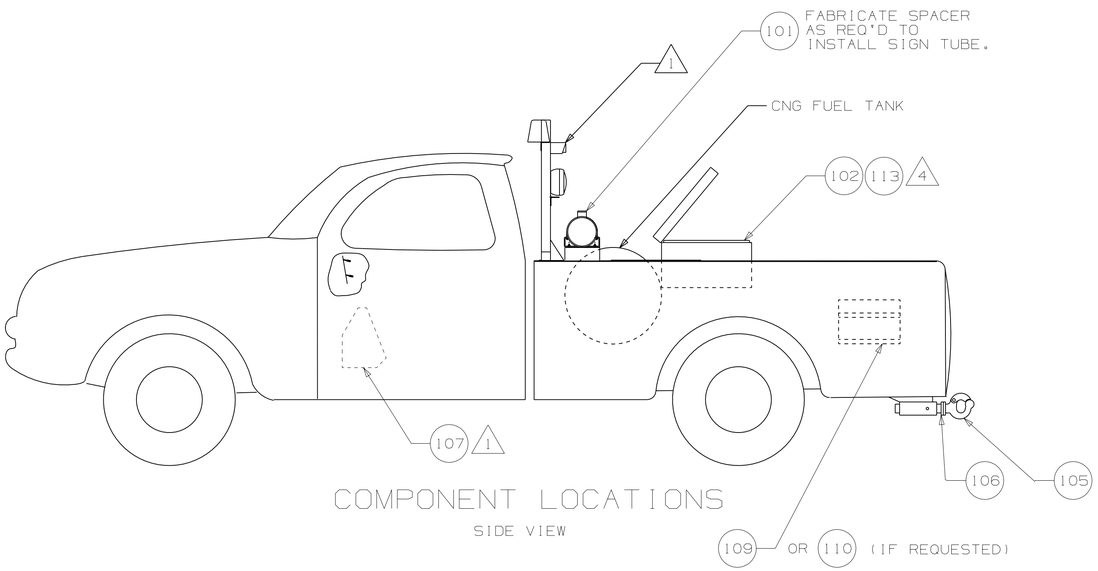

COMPONENT LOCATIONS

SIDE VIEW

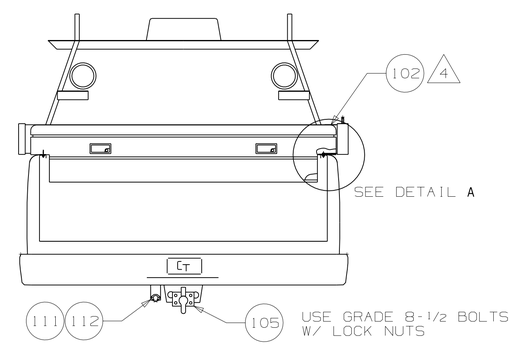

TOOL BOX INSTALLATION

REAR VIEW

BILL OF MATERIALS

ITEM	QTY	DESCRIPTION
101	1	6" DIA. SIGN TUBE DWG# E2-D254-01 CT 051-3274
102	1	CROSS BED TOOLBOX - SHALLOW BOX: CONTICO #ALF571 CT# 051-3252 STANDARD BOX: WEATHERGUARD #R125 CT# 051-1312
103	2	1/8 × 4 × 18 LG FLAT BAR
104	4	5/16 × 1 1/4 UNC BOLT, WASHER & NYLOCK
105	1	DUPLEX HITCH CT# 059-1054
106	1	COUPLER CT# 059-1054
107	1	CONSOLE RADIO UNIVERSAL DWG #U1-D013-01 CT #030-4839
108	1	RACK,LIGHT DWG# P2-D066-01 CT# 051-2863
109	1	RACK, CHOCK BLOCK DWG# E2-D143-01 CT# 051-2150
110	1	HOLDER, CHOCK BLOCK (DIST. 4 ONLY) DWG# E2-D195-01 CT# 051-2678
111	1	7-WIRE SOCKET COLE-HERSEE# 12063 DWG# U1-A010-01 CT# 034-1265
112	1	BOOT FOR 7-WIRE SOCKET COLE-HERSEE# 81356 CT# 034-4896
113	1	PLYWOOD, CDX, REINFORCEMENT 1/2 × 19 × 60

NOTES:

1. SEE DWG #U1-D016-01 FOR ELECTRICAL SCHEMATIC AND PART NUMBERS.
2. SEE DWG #I-007PU-DE FOR DECAL INSTALLATION AND PART NUMBERS AND I-007PU-SA FOR SOFT ACCESSORY INSTALLATIONS.
3. ALL WELDS, ELECTRICAL AND PAINT WILL BE IN COMPLIANCE WITH CALTRANS EQUIPMENT QUALITY STANDARDS. GO TO www.dot.ca.gov/hq/eqsc TO VIEW EQUIPMENT QUALITY STANDARDS.
4. USE STANDARD BOX IF SPACE ALLOWS.

REV	DATE	DESCRIPTION	BY
A	03/05	ITEM 102 - CORRECTED STK NOS.	SPARTZ

NEXT ASSEMBLY

TOLERANCE-UNLESS OTHERWISE SPECIFIED
DECIMAL ±
FRACTIONAL ±
ANGULAR ±
DRILLED HOLES +
REAMED HOLES ±

STATE OF CALIFORNIA
DEPARTMENT OF TRANSPORTATION

DIVISION OF EQUIPMENT

ONE-HALF TON BI-FUEL PICK-UP:
ACCESSORIES ASSEMBLY

SCALE NONE	DATE 03/10/05	I-00708-AB	
DRAWN SPARTZ	DESIGNED WHEELER		
CHECKED	APPROVED	SHEET 1 OF 1 SHEETS	