DIST	COUNTY	ROUTE	KILOMETER POST TOTAL PROJECT	SHEET No	TOTAL SHEETS
07	LA	1, 5, 91, 164, 210, 605	VAR	1	61

INDEX OF SHEETS

Sheet Number	
1	Title and Location Map
2-3	Typical Cross Sections
4-5	Standard Plans List
6-11	Layout
12-13	Construction Details
14-17	Contour Grading
18-25	Drainage Plans
26-29	Drainage Profiles
30-38	Drainage Details
39-41	Drainage Quantities
42-45	Traffic Handling
46	Construction Area Signs
47-49	Summary of Quantities
50	Retaining Wall
51-52	Irrigation Plans
53-61	Electrical Plans

PROJECT PLANS FOR CONSTRUCTION ON AND ADJACENT TO STATE HIGHWAY

IN LOS ANGELES COUNTY AT VARIOUS LOCATIONS

To be supplemented by Standard Plans dated July, 1997

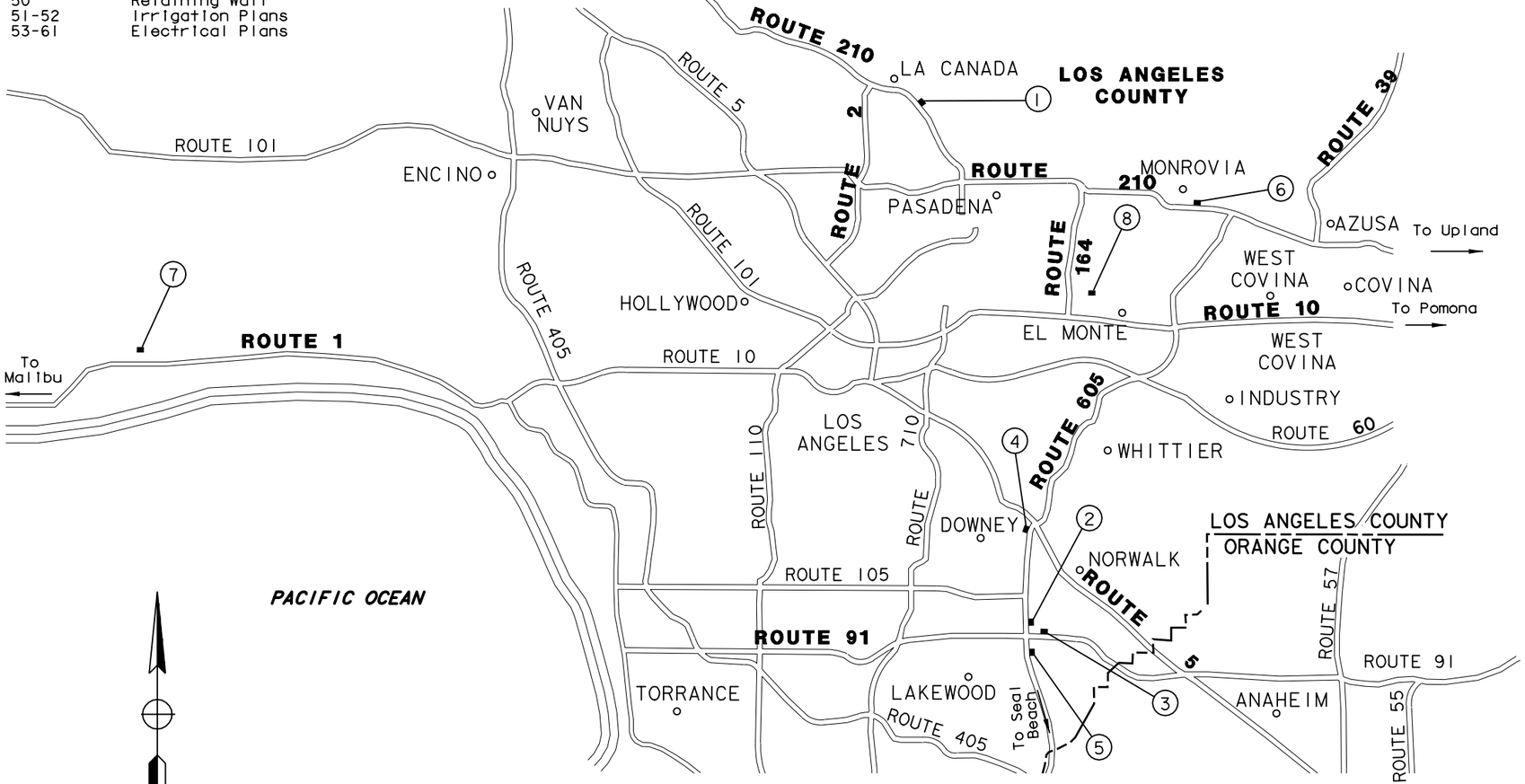

LOCATION MAP

Metric

AS-BUILT

12 / 15 / 99

LOCATION OF CONSTRUCTION

LOC	ROUTE	KP	PM	DESCRIPTION
(1)	210	36.19	22.49	ALTADENA MAINTENANCE STATION
(2)	605	8.18	5.08	(E) SR-91/(N) I-605 SEPARATION
(3)	91	27.46	17.06	(W) SR-91/CERRITOS MAINTENANCE STATION
(4)	5	11.18	6.95	(S) I-5 /(S) I-605 SEPARATION
(5)	605	3.18	1.98	(N) I-605/DEL AMO INTERCHANGE
(6)	210	55.91	34.74	FOOTHILL MAINTENANCE STATION
(7)	1	71.00	44.12	LAS FLORES MAINTENANCE STATION
(8)	164	10.69	6.64	ROSEMEAD MAINTENANCE STATION

NO SCALE

The Contractor shall possess the Class (or Classes) of license as specified in the ''Notice to Contractors''.

Harold T. Glaser 6/30/98
Project Engineer Date
Registered Civil Engineer

REGISTERED PROFESSIONAL ENGINEER
HAROLD T. GLASER
No. 30437
Exp. 3/31/00
CIVIL
STATE OF CALIFORNIA

Plans Approval Date

PROJECT ENGINEER	RONALD L. WURZ	DATE	5/98
PROJECT MANAGER	BILL WEIDENBACHER	DATE	5/98

MONTGOMERY WATSON - CHAUDHARY
750 B STREET SUITE 1610
SAN DIEGO CA 92101-8131

Contract No.

LAST REVISION DATE PLOTTED => 29-JUN-2000

FOR REDUCED PLANS ORIGINAL 0 20 40 60 80

DIST	COUNTY	ROUTE	KILOMETER POST TOTAL PROJECT	SHEET No	TOTAL SHEETS
07	LA	1,5,91,164 210,605	VAR	3	61

Harold T Glaser 10/15/99
REGISTERED CIVIL ENGINEER

PLANS APPROVAL DATE

REGISTERED PROFESSIONAL ENGINEER — HAROLD T. GLASER — No. 30437 — EXP. 3/31/00 — CIVIL — STATE OF CALIFORNIA

MONTGOMERY WATSON - CHAUDHARY
750 B STREET SUITE 1610
SAN DIEGO CA 92101-8131

Metric

CALCULATED/ DESIGNED BY	CHECKED BY
PXN 4/98	RLW 4/98

DATE	REVISED BY	DATE REVISED
	GF	10/99

PROJECT ENGINEER
RONALD L. WURZ

TYPICAL STRUCTURAL SECTIONS

1	600 mm IMPORTED TOP SOIL
2	60 mm AC TYPE B 210 mm CLASS 2 AB

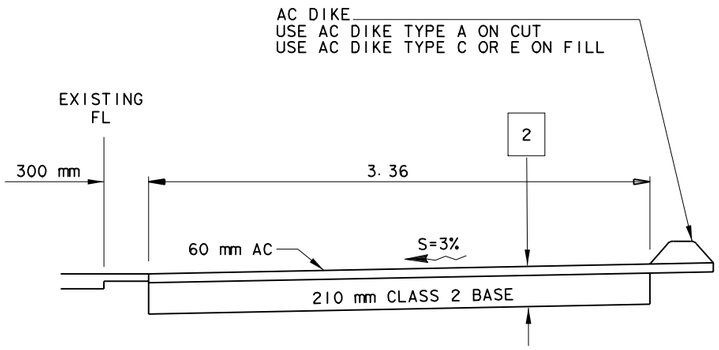

TYPICAL CROSS SECTION
PULLOFF AREA

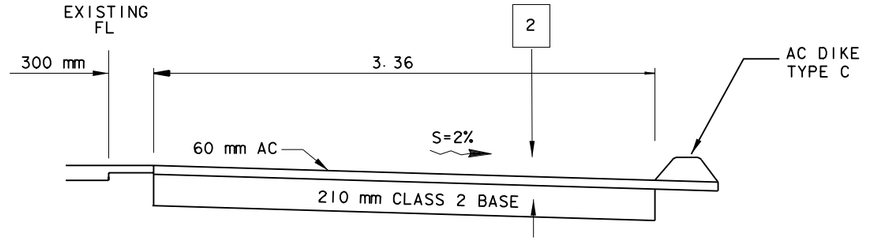

PULLOUT AREA CROSS SECTION
N 605/91 INTERCHANGE

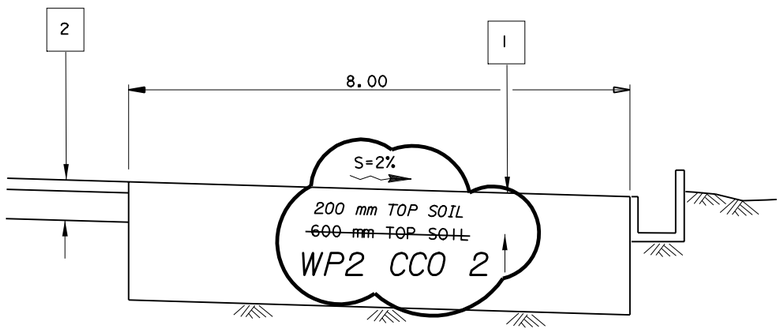

BIOFILTRATION STRIP
N 605/91 INTERCHANGE

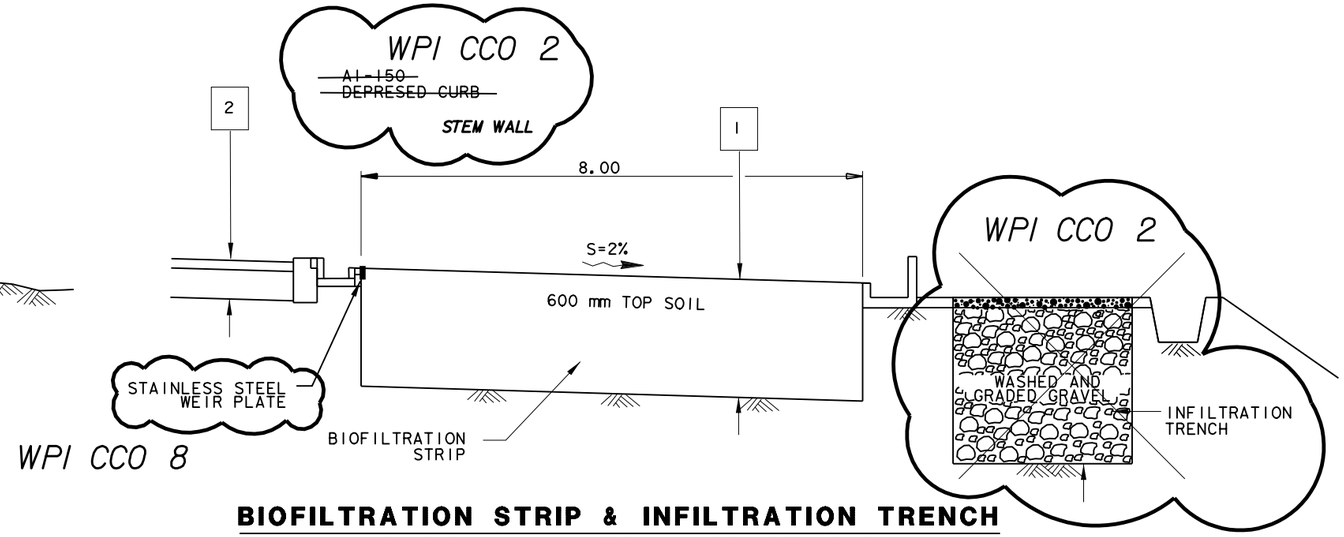

WPI CCO 8

BIOFILTRATION STRIP & INFILTRATION TRENCH
ALTADENA MAINTENANCE STATION

AS - BUILT

TYPICAL CROSS SECTIONS

NO SCALE

ALL DIMENSIONS ARE IN METERS UNLESS OTHERWISE SHOWN

X-2

LAST REVISION 00.00.00 DATE PLOTTED => 23-MAY-2000

FOR REDUCED PLANS ORIGINAL 0 20 40 60 80 USERNAME =>$$$$$$USER$$$$$$

DIST.	COUNTY	ROUTE	KILOMETER POST TOTAL PROJECT	SHEET NO.	TOTAL SHEETS
7	LA	1,5,91,164 210,605	VAR	4	61

The State of California or its officers or agents shall not be responsible for the accuracy or completeness of electronic copies of this plan sheet.

To accompany plans dated April 1998

GENERAL ROAD WORK

MISCELLANEOUS

- ■ A10A Abbreviations
- ■ A10B Symbols
- □ A20A Pavement Markers and Traffic Lines, Typical Details
- □ A20B Pavement Markers and Traffic Lines, Typical Details
- □ A20C Pavement Markers and Traffic Lines, Typical Details
- □ A20D Pavement Markers and Traffic Lines, Typical Details
- □ A24A Pavement Markings- Arrows
- □ A24B Pavement Markings- Arrows
- □ A24C Pavement Markings- Symbols and Numerals
- □ A24D Pavement Markings- Words
- □ A24E Pavement Markings- Words and Crosswalks
- □ A35A Portland Cement Concrete Paving Details
- □ A40 Rumble Strip Details
- ■ A62A Excavation and Backfill- Miscellaneous Details
- □ A62B Limits of Payment for Excavation and Backfill Bridge- Surcharge and Wall
- □ A62C Limits of Payment for Excavation and Backfill- Bridge
- □ A62D Excavation and Backfill- Concrete Pipe Culverts
- □ A62E Excavation and Backfill- Cast-In-Place Reinforced Concrete Box and Arch Culverts
- ■ A62F Excavation and Backfill- Metal and Plastic Culverts
- □ A73A Object Markers
- ■ A73B Markers
- □ A73C Delineators, Channelizers and Barricades
- □ A74 Survey Monuments
- □ A75A Concrete Barrier Type 50
- □ A75B Concrete Barrier Type 50E
- □ A75D Concrete Headlight Glare Screen
- □ RSP A76A CONCRETE BARRIER TYPE 60
- □ A76B Concrete Barrier Type 60
- □ A76C Concrete Barrier Type 60E
- □ A76D Concrete Barrier Type 60G
- □ A76E Concrete Barrier Type 60G
- □ A76F Concrete Barrier Type 60GE
- □ RSP A76G CONCRETE BARRIER TYPE 60S
- □ A76H Concrete Barrier Type 60S
- □ A76I Concrete Barrier Type 60SE
- ■ A77A Metal Beam Guard Railing
- □ A77B Metal Beam Guard Railing- Standard Hardware
- □ RSP A77C METAL BEAM GUARD RAILING - POST AND BLOCKS
- □ A77D Guard Railing Flares
- ■ A77E Guard Railing Flares
- ■ A77F Metal Beam Guard Railing- Miscellaneous Details
- □ A77G Guard Railing End Anchors (Breakaway)
- □ A77GA Anchor Assembly (Breakaway, Type M)-Hardware and Post Details
- □ A77H Guard Railing End Anchors- Breakaway Hardware
- □ A77I Barrier and Guard Railing End Anchors
- □ A77J Guard Railing Connections to Bridge Railings, Retaining Walls and Abutments
- □ A77K Guard Railing Connections to Bridge Sidewalks and Curbs
- □ A78A Thrie Beam Barrier
- □ A78B Thrie Beam Barrier
- □ A78C Thrie Beam Barrier- Standard Hardware
- □ A78D Thrie Beam Barrier- Miscellaneous Details
- □ A78E Thrie Beam Barrier- End Anchors
- □ A78F Thrie Beam Barrier Connections to Bridge Railing
- □ A78G Thrie Beam Barrier Connections to Bridge Curbs, Retaining Walls and Abutments
- □ A78H Thrie Beam Barrier Connections to Concrete Barrier Type 50
- □ A78I Thrie Beam Barrier Connections to Concrete Barrier Type 60
- □ A81 Crash Cushion, Sand Filled
- □ A83 Portable Scale Pad and Approach Slab Details
- □ A85 Chain Link Fence
- □ A86 Barbed Wire and Wire Mesh Fences
- ■ A87 Curbs, Dikes and Driveways
- □ A88 Curb Ramp Details
- □ A90 Accessible Parking

CRIB WALLS

- □ C7A Reinforced Concrete Crib Wall- Battered Wall- Types A,B and C
- □ C7B Reinforced Concrete Crib Wall- Battered Wall- Types D,E and F
- □ C7C Reinforced Concrete Crib Wall- Vertical Wall- Types A,B and C
- □ C7D Reinforced Concrete Crib Wall- Vertical Wall- Types D,E and F
- □ RSP C7E REINFORCED CONCRETE CRIB WALL- TYPES A,B,C,D,E AND F-HEADER AND STRECHER DETAILS
- □ RSP C7F DESIGN DATA FOR REINFORCED CONCRETE CRIB WALL FOUNDATION PRESSURE- BATTERED WALL
- □ RSP C7G REINFORCED CONCRETE CRIB WALL FOUNDATION PRESSURE- VERTICAL WALL
- □ C8A Steel Crib Wall- Construction Details
- □ C8B Steel Crib Wall- Design Data
- □ RSP C8C STEEL CRIB WALL- DESIGN DATA
- □ C9A Timber Crib Wall- Types A,B,C and D
- □ RSP C9B TIMBER CRIB WALL- TYPES A,B,C AND D-DESIGN DATA

DRAINAGE

- □ D72 Drainage Inlets
- ■ D73 Drainage Inlets
- □ D74A Drainage Inlets
- □ D74B Drainage Inlets
- ■ D74C Drainage Inlet Details
- D75 IS DELETED AND REPLACED WITH NSP D75A, NSP D75B AND NSP D75C)
- ■ RSP D77A Grate Details
- □ D77B Bicycle Proof Grate Details
- □ D77C Alternative Hinged Cover for Type OL and OS Inlets and Trash Rack for Type OCP Inlet
- □ D78 Gutter Depressions
- □ D79 Precast Reinforced Concrete Pipe- Direct Design Method
- □ D80 Cast-In-Place Reinforced Concrete Single Box Culvert
- □ D81 Cast-In-Place Reinforced Concrete Double Box Culvert
- □ D82 Cast-In-Place Reinforced Concrete Box Culvert Miscellaneous Details
- □ D84 Box Culvert Wingwalls- Types A,B and C
- □ RSP D85 BOX CULVERT WINGWALLS- TYPES D AND E
- □ D86A Box Culvert Warped Wingwalls
- □ D86B Pipe Culvert Headwalls, Endwalls and Warped Wingwalls
- □ D86C Arch Culvert Headwalls, Endwalls and Warped Wingwalls
- □ D87A Overside Drains
- □ D87B Overside Drains
- □ D87C Underdrains
- □ D88 Construction Loads on Culverts
- □ D88A Strut Details for Structural Steel Plate Pipes, Arches, and Vehicular Undercrossings
- ■ D89 Pipe Headwalls
- □ D90 Pipe Culvert Headwalls, Endwalls and Wingwalls-Types A,B and C
- □ D93A Pipe Riser Connections
- □ D93B Drainage Inlet Riser Connections
- □ D93C Pipe Riser with Debris Rack Cage
- ■ D94A Metal and Plastic Flared End Sections
- □ D94B Concrete Flared End Sections
- □ D95 Concrete Arch Culverts
- □ D97A Corrugated Metal Pipe Coupling Details No. 1- Annular Coupling Band Bar and Strap and Angle Connectors
- □ D97B Corrugated Metal Pipe Coupling Details No. 2- Hat Band Coupler and Flange Details
- ■ D97C Corrugated Metal Pipe Coupling Details No. 3- Helical and Universal Couplers
- □ D97D Corrugated Metal Pipe Coupling Details No. 4- Hugger Coupling Bands
- □ D97E Corrugated Metal Pipe Coupling Details No. 5- Standard Joint
- □ D97F Corrugated Metal Pipe Coupling Details No. 6- Positive Joint
- □ D97G Corrugated Metal Pipe Coupling Details No. 7- Positive Joints and Downdrains
- □ D97H Reinforced Concrete Pipe or Non-Reinforced Concrete Pipe Standard and Positive Joints
- □ D98A Slotted Corrugated Steel Pipe Drain Details
- □ D98B Slotted Corrugated Steel Pipe Drain Details
- □ D99A Structural Section Drainage System Details
- □ D99B Edge Drain Outlet and Vent Details
- □ D99C Edge Drain Cleanout and Vent Details
- □ D99D Cross Drain Interceptor Details

HIGHWAY PLANTING

- ■ H1 Planting and Irrigation- Abbreviations
- ■ RSP H2 PLANTING AND IRRIGATION- SYMBOLS
- □ H3 Planting and Irrigation- Details
- □ H4 Planting and Irrigation- Details
- □ H5 Planting and Irrigation- Details
- □ H6 Planting and Irrigation- Details
- ■ H7 Planting and Irrigation- Details
- □ H8 Planting and Irrigation- Details

TEMPORARY FACILITIES

- ■ T1 Temporary Crash Cushion, Sand Filled
- ■ T2 Temporary Crash Cushion, Sand Filled
- ■ T3 Temporary Railing (Type K)
- □ T4 Temporary Traffic Screen
- □ T5 Temporary Terminal Section (Type K)
- ■ T7 Construction Project Funding Identification Signs
- ■ T10 Traffic Control System for Lane Closure on Freeways and Expressways
- □ T10A Traffic Control System for Lane and Complete Closures on Freeways and Expressways
- □ T11 Traffic Control System for Lane Closure on Multilane Conventional Highways
- □ T12 Traffic Control System for Lane Closure on Multilane Conventional Highways
- □ T13 Traffic Control System for Lane Closure on Two Lane Conventional Highways
- ■ T14 Traffic Control System for Ramp Closures
- □ T15 Traffic Control System for Moving Lane Closure on Multilane Highways
- □ T16 Traffic Control System for Moving Lane Closure on Multilane Highways
- □ T17 Traffic Control System for Moving Lane Closure on Two Lane Highways

BRIDGE

- □ B0-1 Bridge Details
- ■ B0-3 Bridge Details
- □ B0-5 Bridge Details
- □ B0-13 Bridge Details
- □ B2-3 400 mm Cast-In-Drilled-Hole Concrete Pile
- □ B2-5 Pile Details- Class 400 and Class 625
- □ B2-6 Pile Details- Class 400C and Class 625C
- □ B2-8 Pile Details- Class 900 and Class 900C
- □ B2-9 Load Test Pile Details (1)
- □ B2-10 Load Test Pile Details (2)
- □ B2-11 Load Test Pile Details (3)
- ■ RSP B3-1 RETAINING WALL TYPE 1- H=1200 THROUGH 9100 mm
- □ B3-2 Retaining Wall Type 1- H=9700 Through 10 900 mm
- □ RSP B3-3 RETAINING WALL- TYPE 1A
- □ B3-4 Retaining Wall- Type 2
- □ B3-5 Counterfort Retaining Wall- Type 3
- □ B3-6 Counterfort Retaining Wall- Type 4
- □ RSP B3-7 RETAINING WALL- TYPE 5
- ■ RSP B3-8 RETAINING WALL DETAILS No. 1
- □ B3-9 Retaining Wall Details No. 2
- □ B3-11 Retaining Wall Type 6- 1829 mm Maximum
- □ B6-1 T-Beam Details
- □ B6-10 Utility Openings, T-Beam
- □ B6-21 Joint Seals (Maximum Movement Rating = 50 mm)
- □ B7-1 Box Girder Details
- □ B7-5 Deck Drains
- □ B7-6 Deck Drains- Type D-1 and D-2
- □ B7-10 Utility Opening- Box Girder
- □ B7-11 Utility Details
- □ B8-5 Cast-In-Place Prestressed Girder Details
- □ B11-7 Chain Link Railing
- ■ B11-47 Cable Railing
- □ B11-51 Tubular Hand Railing
- □ B11-52 Chain Link Railing Type 7
- □ B11-53 Concrete Barrier Type 25
- □ B11-54 Concrete Barrier Type 26

AS - BUILT

SHEET 1 OF 2

STANDARD PLANS LIST

(July,1997 Edition)

REVISED DECEMBER 4, 1997

WEB SITE ADDRESS: http://www.dot.ca.gov/hq/esc/projplan/ppintro.htm

The Standard Plan sheets applicable to this contract include, but are not limited to those indicated by a marked box.

USERNAME =℄ $USER

DATE PLOTTED =℄ 22-MAY-2000

CONTRACT NO

- ☐ B13-1 Slope Protection Details
- ☐ B14-1 Structural Steel Plate Vehicular Undercrossing
- ☐ B14-3 Communication and Sprinkler Control Conduit (Conduit less than size 103)
- ☐ B14-4 Water Supply Line (Bridge) (Pipe less than NPS 4)
- ☐ B14-5 Water Supply Line (Details) (Pipe less than NPS 4)

ROADSIDE SIGNS

- ■ RS1 Roadside Signs, Typical Installation Details No. 1
- ■ RS2 Roadside Signs, Wood Post, Typical Installation Details No. 2
- ☐ RS3 Roadside Signs, Laminated Wood Box Post, Typical Installation Details No. 3
- ☐ RS4 Roadside Signs, Typical Installation Details No. 4

OVERHEAD SIGNS

OVERHEAD SIGNS-TRUSS

- ☐ S1 Overhead Signs- Truss, Instructions and Examples
- ☐ S2 Overhead Signs- Truss, Single Post Type, Post Types 11 thru V11
- ☐ S3 Overhead Signs- Truss, Two Post Type, Post Types 1-S thru V11-S
- ☐ RSP S4 OVERHEAD SIGNS- TRUSS, SINGLE POST TYPE, STRUCTURAL FRAME MEMBERS
- ☐ S5 Overhead Signs- Truss, Two Post Type, Structural Frame Members
- ☐ S6 Overhead Signs- Truss, Structural Frame Details
- ☐ S7 Overhead Signs- Truss, Frame Juncture Details
- ☐ S8A Overhead Signs- Steel Frame Removable Sign Panel Frames
- ☐ S8B Overhead Signs- Removable Sign Panel Frames, Overhead Formed Panel Mounting Details
- ☐ S8C Overhead Signs- Truss, Sign Panel Mounting Details, Laminated Panel- Type A
- ☐ S8D Overhead Signs- Truss, Removable Sign Panel Frames 2.794 m and 3.048 m Sign Panels
- ☐ S9 Overhead Signs- Walkway Details No. 1
- ☐ S10 Overhead Signs- Walkway Details No. 2
- ☐ S11 Overhead Signs- Walkway Safety Railing Details
- ☐ S13 Overhead Signs- Truss Pile Foundation

OVERHEAD SIGNS-LIGHTWEIGHT

- ☐ S14A Overhead Signs- Lightweight Balanced-Single Steel Post Connection and Mounting Details
- ☐ S14B Overhead Signs- Lightweight Balanced-Single Steel Post Details
- ☐ S15 Overhead Signs- Lightweight, Type A, Connection Details
- ☐ S16 Overhead Signs- Lightweight, Type B, Connection Details
- ☐ S17 Overhead Signs- Lightweight, Type C, Connection Details
- ☐ S18A Overhead Signs- Lightweight, Sign Panel Mounting Details, Laminated Panel- Type A
- ☐ S18B Overhead Signs- Lightweight, Light Fixture Mounting Details
- ☐ S20A Overhead Signs- Lightweight Post Details
- ☐ S20B Overhead Signs- Lightweight Foundation Details

OVERHEAD SIGNS-BOX BEAM CLOSED TRUSS ALTERNATIVE

- ☐ S39 Overhead Signs- Box Beam Closed Truss, Foundation Details
- ☐ S40A Overhead Signs- Box Beam Closed Truss, Two Post Type Frame Members
- ☐ S40B Overhead Signs- Box Beam Closed Truss, Single and Two Post Type, General Frame Details
- ☐ S40C Overhead Signs- Box Beam Closed Truss, Ribbed Sheet Metal Details
- ☐ S40D Overhead Signs- Box Beam Closed Truss, Two Post Type, Frame Details
- ☐ S40E Overhead Signs- Box Beam Closed Truss, Two Post Type, Frame Juncture Details
- ☐ S40F Overhead Signs- Box Beam Closed Truss, Two Post Type, Post Details
- ☐ S40G Overhead Signs- Box Beam Closed Truss, Single Post Type, Frame Members
- ☐ S40H Overhead Signs- Box Beam Closed Truss, Single Post Cantilever, Frame Details
- ☐ S40I Overhead Signs- Box Beam Closed Truss, Single Post Cantilever, Frame Juncture Details
- ☐ S40J Overhead Signs- Box Beam Closed Truss, Single Post Cantilever, Post Details
- ☐ S40K Overhead Signs- Box Beam Closed Truss, Single Post Butterfly, Frame Details
- ☐ S40L Overhead Signs- Box Beam Closed Truss, Single Post Butterfly, Frame Juncture Details
- ☐ S40M Overhead Signs- Box Beam Closed Truss, Single Post Butterfly, Post Details

OVERHEAD SIGNS-TUBULAR

- ☐ S40N Overhead Signs- Tubular, Instructions and Examples
- ☐ S40P Overhead Signs- Tubular, Single Post Type, Layout and Pipe Selection
- ☐ S40Q Overhead Signs- Tubular, Two Post Type, Layout and Pipe Selection
- ☐ S40R Overhead Signs- Tubular, Structural Frame Details No. 1
- ☐ S40S Overhead Signs- Tubular, Structural Frame Details No. 2
- ☐ S40T Overhead Signs- Tubular, Foundation Details

SIGNALS, LIGHTING AND ELECTRICAL SYSTEMS

- ■ ES-1A Signal, Lighting and Electrical Systems- Symbols and Abbreviations
- ■ ES-1B Signal, Lighting and Electrical Systems- Symbols and Abbreviations
- ■ ES-2A Signal, Lighting and Electrical Systems- Service Equipment
- ■ ES-2B Signal, Lighting and Electrical Systems- Service Equipment
- ■ ES-2C Signal, Lighting and Electrical Systems- Service Equipment Notes
- ■ ES-2D Signal, Lighting and Electrical Systems- Service Equipment and Typical Wiring Diagram, Type A
- ☐ ES-2E Signal, Lighting and Electrical Systems- Service Equipment and Typical Wiring Diagram, Type B
- ☐ ES-2F Signal, Lighting and Electrical Systems- Service Equipment and Typical Wiring Diagram, Type C
- ☐ ES-3A Signal, Lighting and Electrical Systems- Signal Heads and Mountings
- ☐ ES-3B Signal, Lighting and Electrical Systems- Signal Heads and Mountings
- ☐ ES-3C Signal, Lighting and Electrical Systems- Signal Heads and Mountings
- ☐ ES-3D Signal, Lighting and Electrical Systems- Signal Heads and Mountings
- ☐ ES-3E Signal, Lighting and Electrical Systems- Signal Heads and Mountings
- ☐ ES-4A Signal, Lighting and Electrical Systems- Controller Cabinet Details
- ☐ ES-4B Signal, Lighting and Electrical Systems- Controller Cabinet Details
- ☐ ES-4C Signal, Lighting and Electrical Systems- Controller Cabinet Details
- ☐ ES-4D Irrigation Controller Enclosure Cabinet
- ☐ ES-5A Signal, Lighting and Electrical Systems- Detectors
- ☐ ES-5B Signal, Lighting and Electrical Systems- Detectors
- ☐ ES-5C Signal, Lighting and Electrical Systems- Detectors
- ☐ ES-5D Signal, Lighting and Electrical Systems- Detectors
- ☐ ES-5E Signal, Lighting and Electrical Systems- Detectors
- ☐ ES-5F Signal, Lighting and Electrical Systems- Pedestrian Barricades
- ☐ ES-6A Signal and Lighting Standards- Type 1 Standards and Equipment Numbering
- ☐ ES-6AA Signal Standards- Push Button Posts
- ☐ ES-6B Lighting Standards- Types 15, 21 and 22
- ☐ ES-6C Lighting Standards- 24.4 m to 48.8 m High Mast Light Pole, Foundation Details
- ☐ ES-6D Lighting Standards- Types 30 and 31
- ☐ ES-6DA Lighting Standards- Type 32
- ☐ ES-6E Lighting Standards- Types 30 and 31, Base Details
- ☐ ES-6F Lighting Standards- 10 Degree Type
- ☐ ES-6H Lighting Standards- 10 Degree Type, Details
- ☐ RSP ES-6J SIGNAL AND LIGHTING STANDARDS- CASE 1 ARM LOADING, WIND VELOCITY = 113 km/h, ARM LENGTHS 4.6 m TO 9.1 m
- ☐ ES-6K Signal and Lighting Standards- Case 2 Arm Loading, Wind Velocity = 113 km/h, Arm Lengths 6.1 m to 9.1 m
- ☐ ES-6L Signal and Lighting Standards- Case 3 Arm Loading, Wind Velocity = 113 km/h, Arm Lengths 4.6 m to 13.7 m
- ☐ ES-6M Signal and Lighting Standards- Case 4 Arm Loading, Wind Velocity = 113 km/h, Arm Lengths 7.6 m to 13.7 m
- ☐ ES-6MA Signal and Lighting Standards- Case 5 Arm Loading, Wind Velocity = 113 km/h, Arm Lengths 15.2 m to 16.8 m
- ☐ ES-6N Signal and Lighting Standards- Type 40-0-129
- ☐ ES-6O Signal and Lighting Standards- Case 1 Arm Loading, Wind Velocity = 129 km/h, Arm Lengths 7.6 m to 9.1 m
- ☐ ES-6P Signal and Lighting Standards- Case 2 Arm Loading, Wind Velocity = 129 km/h, Arm Lengths 6.1 m to 9.1 m
- ☐ ES-6Q Signal and Lighting Standards- Case 3 Arm Loading, Wind Velocity = 129 km/h, Arm Lengths 6.1 m to 13.7 m

DIST.	COUNTY	ROUTE	KILOMETER POST TOTAL PROJECT	SHEET NO.	TOTAL SHEETS
7	LA	I-5,91,I64 210,605	VAR	5	61

The State of California or its officers or agents shall not be responsible for the accuracy or completeness of electronic copies of this plan sheet.

Metric

To accompany plans dated April 1998

- ☐ RSP ES-6R SIGNAL AND LIGHTING STANDARDS- CASE 4 ARM LOADING, WIND VELOCITY = 129 km/h, ARM LENGTHS 7.6 m TO 13.7 m
- ☐ ES-6RA Signal and Lighting Standards- Case 5 Arm Loading, Wind Velocity = 129 km/h, Arm Lengths 15.2 m to 16.8 m
- ☐ ES-6RB Signal and Lighting Standards- Case 5 Arm Loading, Wind Velocity = 129 km/h, Arm Lengths 18.2 m to 19.8 m
- ☐ ES-6S Signal and Lighting Standards- Details No. 1
- ☐ ES-6T Signal and Lighting Standards- Details No. 2
- ☐ ES-6TA Signal and Lighting Standards- Pole and Mast Arm Alternatives
- ☐ ES-6U Lighting Standards- Type 15 Slip Base Insert
- ☐ ES-6V Signal and Sign Standards- Type 33 Left Turn
- ☐ ES-7A Signal, Lighting and Electrical Systems- Electrical Details, Structure Installations
- ☐ ES-7B Signal, Lighting and Electrical Systems- Electrical Details, Structure Installations
- ☐ ES-7C Signal, Lighting and Electrical Systems- Electrical Details, Structure Installations
- ☐ ES-7D Signal, Lighting and Electrical Systems- Electrical Details, Structure Installations
- ☐ ES-7E Signal, Lighting and Electrical Systems- Electrical Details, Structure Installations
- ☐ ES-7F Signal, Lighting and Electrical Systems- Flush Soffit Luminaire Modification Details, Structure Installations
- ■ ES-8 Signal, Lighting and Electrical Systems- Pull Box Details
- ☐ ES-9A Signal, Lighting and Electrical Systems- Cantilever Flashing Beacon, Types 9, 9A and 9B
- ☐ ES-9B Signal, Lighting and Electrical Systems- Cantilever Flashing Beacon, Types 9, 9A and 9B
- ☐ ES-10 Signal, Lighting and Electrical Systems- Isolux Diagrams
- ☐ ES-11 Signal, Lighting and Electrical Systems- Foundation Installations
- ☐ ES-12 Signal, Lighting and Electrical Systems- Pedestrian Undercrossing Fluorescent Lighting Fixture
- ☐ ES-13 Signal, Lighting and Electrical Systems- Splicing Details
- ☐ ES-14 Signal, Lighting and Electrical Systems- Wiring Details and Fuse Ratings
- ☐ ES-15 Signal, Lighting and Electrical Systems- Pedestrian Overcrossing Fluorescent Lighting Fixture
- ☐ ES-27A Signal, Lighting and Electrical Systems- Extinguishable Message Sign, 250 mm Letters
- ☐ ES-27B Signal, Lighting and Electrical Systems- Extinguishable Message Sign, 250 mm Letters
- ☐ ES-28 Signal, Lighting and Electrical Systems- Extinguishable Message Sign and Flashing Beacons

SIGN ILLUMINATION

- ☐ ES-29 Sign Illumination- Mercury Sign Illumination Equipment
- ☐ ES-30 Sign Illumination- 915 mm Fluorescent Sign Illumination Equipment
- ☐ ES-32A Sign Illumination- Sign Illumination Equipment
- ☐ ES-32B Sign Illumination- Sign Illumination Control
- ☐ ES-33 Sign Illumination- Internally Illuminated Street Name Sign

CLOSED CIRCUIT TELEVISION

- ☐ RSP ES-34ACLOSED CIRCUIT TELEVISION- POLE DETAILS
- ☐ ES-34B Closed Circuit Television- Pole Details- Overhead Sign Mounted

NEW STANDARD PLANS

- ☐ NSP D75APIPE INLETS
- ☐ NSP D75BPIPE INLETS
- ☐ NSP D75CPIPE INLETS- LADDER, STEP AND TRASH RACK DETAILS

AS - BUILT

SHEET 2 OF 2

STANDARD PLANS LIST

(July,1997 Edition)

REVISED DECEMBER 4, 1997

WEB SITE ADDRESS: http://www.dot.ca.gov/hq/esc/projplan/ppintro.htm

DATE PLOTTED = 22-MAY-2000
TIME PLOTTED = 09:28

The Standard Plan sheets applicable to this contract include, but are not limited to those indicated by a marked box.

USERNAME = $USER

CONTRACT NO

DIST	COUNTY	ROUTE	KILOMETER POST TOTAL PROJECT	SHEET No	TOTAL SHEETS
07	LA	1,5,91,164 210,605	VAR	6	61

Harold T. Glaser 10/15/99
REGISTERED CIVIL ENGINEER

REGISTERED PROFESSIONAL ENGINEER HAROLD T. GLASER No. 30437 EXP. 3/31/00 CIVIL STATE OF CALIFORNIA

PLANS APPROVAL DATE

MONTGOMERY WATSON - CHAUDHARY
750 B STREET SUITE 1610
SAN DIEGO CA 92101-8131

Metric

COORDINATE POINT	NORTHING	EASTING
1	N 575 582.470	E 1 984 507.172
2	N 575 593.271	E 1 984 517.677
3	N 575 581.745	E 1 984 535.117
4	N 575 587.395	E 1 984 525.286
5	N 575 590.297	E 1 984 522.882
6	N 575 588.206	E 1 984 525.031
7	N 575 588.031	E 1 984 525.277
8	N 575 580.135	E 1 984 538.297
9	N 575 573.015	E 1 984 531.566
10	N 575 563.702	E 1 984 541.437
11	N 575 569.007	E 1 984 546.597
12	N 575 566.079	E 1 984 549.608
13	N 575 564.084	E 1 984 534.144
14	N 575 560.184	E 1 984 530.277
15	N 575 607.576	E 1 984 512.356
16	N 575 608.843	E 1 984 513.904

COORDINATE POINT	NORTHING	EASTING
17	N 575 590.348	E 1 984 529.038
18	N 575 582.870	E 1 984 536.017
19	N 575 584.320	E 1 984 537.427
20	N 575 579.048	E 1 984 532.301
21	N 575 576.089	E 1 984 517.941
22	N 575 571.418	E 1 984 522.378

LEGEND:

BMP SEED

INDICATES SAWCUT LINE

ROUTE 210 RAMP

EXISTING MONITORING WELL TO BE REMOVED

REMOVE CONCRETE STORAGE BAYS AND PAD

INSTALL LYSIMETER IN ACCORDANCE WITH MANUFACTURERS INSTRUCTIONS

INSTALL NEW MONITORING WELL SEE DRAINAGE DETAILS SHEET D-17

INSTALL CL 1.8 FENCE

INSTALL CL 1.8 FENCE

REPLACE REMOVED STORAGE BAYS (SEE DETAIL C-1)

SAWCUT LINE (TYP)

2.0 (TYP)

1.5 CL 1.8 GATES

FG 327.50

TANK PAD WASTE OIL

MASONRY PILLAR

PULL BOX

SEWER DISPENSER FOR PORTAPOTTYS

CONC. PAD

HEATING HOPPER

TRAILER #2

TRAILER #1

GASOLINE FILLER CAP

DISSEL FILLER CAP

MONITORING WELL

CONCRETE PAD

SENSORS

PRESSURE RELEASE VALVES

BUILDING

TOE OF CURB PLANTER

TC

R/W

LA CANADA AVE

WPI CCO 2

ALTADENA MAINTANENCE STATION

NOTE:

1. CONTRACTOR SHALL REPLACE ASPHALT AS REQUIRED WITH AN EQUIVALENT OR BETTER STRUCTURAL SECTION.
2. CONTRACTOR SHALL SAWCUT EXISTING PAVEMENT IN ALL AREAS REQUIRED FOR PAVEMENT REMOVAL.
3. ALL SHEET PILING AND BELOW GRADE TRENCH STABILAZTION SHALL BE REMOVED AS DIRECTED BY ENGINEER PRIOR TO COMPLETION OF PROJECT.

LAYOUT

SCALE 1:200

ALL DIMENSIONS ARE IN METERS UNLESS OTHERWISE SHOWN

L-1

DATE	CNH	REVISED BY	GF
4/98	RLW	DATE REVISED	10/99
CALCULATED/ DESIGNED BY		CHECKED BY	

PROJECT ENGINEER
RONALD L. WURZ

LAST REVISION DATE PLOTTED => 23-MAY-2000

FOR REDUCED PLANS ORIGINAL 0 20 40 60 80 USERNAME =>$$$$$$USER$$$$$$

DIST	COUNTY	ROUTE	KILOMETER POST TOTAL PROJECT	SHEET No	TOTAL SHEETS
07	LA	1,5,91,164 210,605	VAR	6	61

Harold T. Glaser 10/15/99
REGISTERED CIVIL ENGINEER

PLANS APPROVAL DATE

MONTGOMERY WATSON - CHAUDHARY
750 B STREET SUITE 1610
SAN DIEGO CA 92101-8131

REGISTERED PROFESSIONAL ENGINEER HAROLD T. GLASER No. 30437 Exp. 3/31/00 CIVIL STATE OF CALIFORNIA

COORDINATE POINT	NORTHING	EASTING
1	N 575 586.205	E 1 984 511.079
2	N 575 593.094	E 1 984 517.574
3	N 575 568.459	E 1 984 548.785
4	N 575 587.395	E 1 984 525.287
5	N 575 590.297	E 1 984 522.882
6	N 575 588.205	E 1 984 525.033
7	N 575 588.031	E 1 984 525.277
8	N 575 567.575	E 1 984 544.641
9	N 575 554.505	E 1 984 535.223
10	N 575 564.083	E 1 984 541.348
11	N 575 595.784	E 1 984 562.257
12	N 575 596.751	E 1 984 566.447
13	N 575 620.338	E 1 984 556.589
14	N 575 621.305	E 1 984 560.779
15	N 575 607.576	E 1 984 512.356
16	N 575 608.843	E 1 984 513.904

COORDINATE POINT	NORTHING	EASTING
17	N 575 590.348	E 1 984 529.038
18	N 575 582.870	E 1 984 536.017
19	N 575 584.320	E 1 984 537.427
20	N 575 579.237	E 1 984 532.272
21	N 575 571.328	E 1 984 533.162
22	N 575 567.493	E 1 984 537.105
23	N 575 560.686	E 1 984 538.146
24	N 575 587.434	E 1 984 509.210
25	N 575 556.436	E 1 984 542.423
26	N 575 554.186	E 1 984 544.809

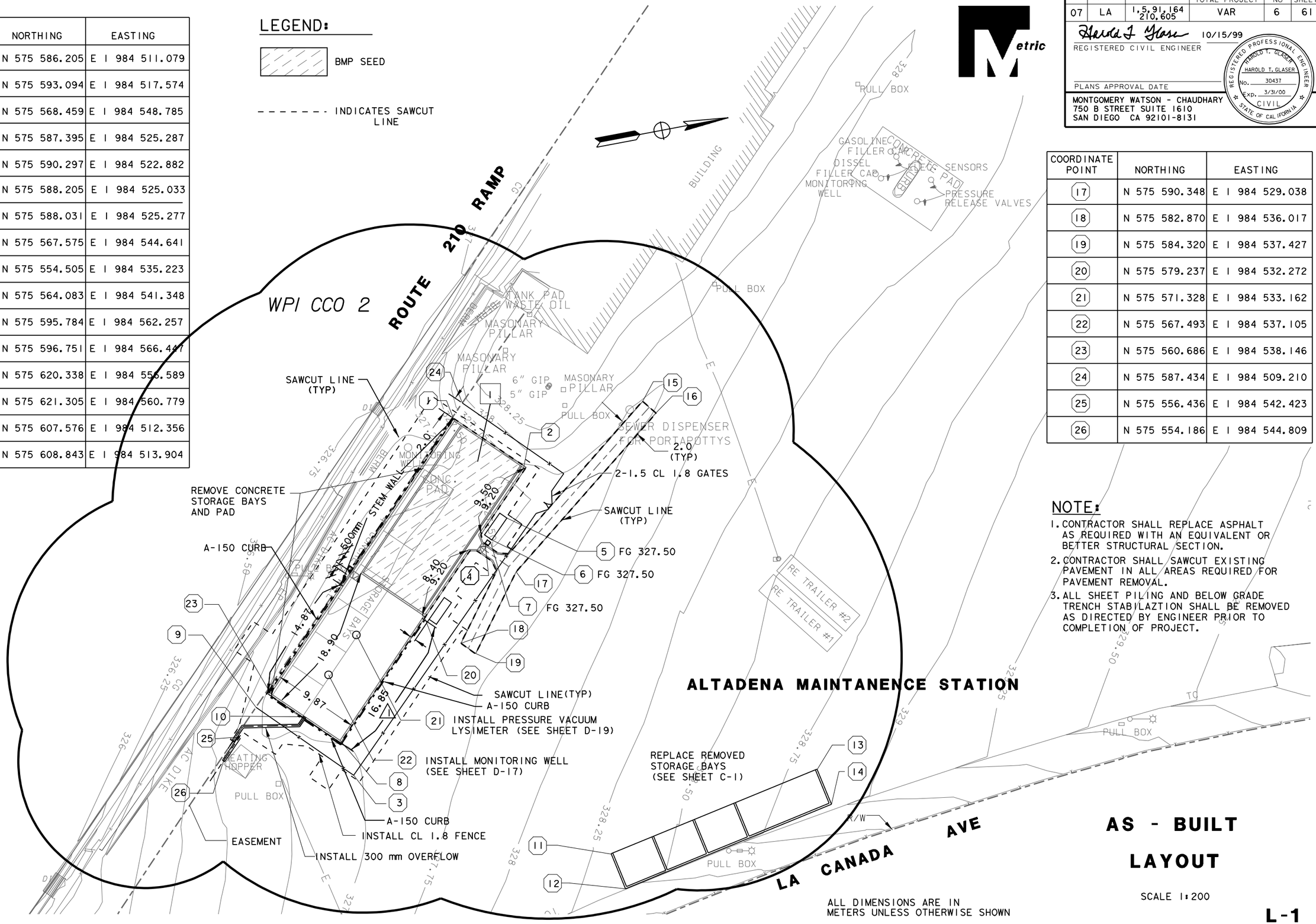

NOTE:

1. CONTRACTOR SHALL REPLACE ASPHALT AS REQUIRED WITH AN EQUIVALENT OR BETTER STRUCTURAL SECTION.
2. CONTRACTOR SHALL SAWCUT EXISTING PAVEMENT IN ALL AREAS REQUIRED FOR PAVEMENT REMOVAL.
3. ALL SHEET PILING AND BELOW GRADE TRENCH STABILAZTION SHALL BE REMOVED AS DIRECTED BY ENGINEER PRIOR TO COMPLETION OF PROJECT.

ALL DIMENSIONS ARE IN METERS UNLESS OTHERWISE SHOWN

AS - BUILT LAYOUT

SCALE 1:200

L-1

PROJECT ENGINEER RONALD L. WURZ

CALCULATED/DESIGNED BY CNH DATE 4/98 REVISED BY GF
CHECKED BY RLW 4/98 DATE REVISED 10/99

LAST REVISION 00 00 00 DATE PLOTTED => 23-MAY-2000

FOR REDUCED PLANS ORIGINAL 0 20 40 60 80 USERNAME =>$$$$$$USER$$$$$$

DIST	COUNTY	ROUTE	KILOMETER POST TOTAL PROJECT	SHEET No	TOTAL SHEETS
07	LA	1,5,91,164 210.605	VAR	12	61

Harold T Glaser 10/15/99
REGISTERED CIVIL ENGINEER

PLANS APPROVAL DATE

REGISTERED PROFESSIONAL ENGINEER HAROLD T. GLASER No. 30437 EXP. 3/31/00 CIVIL STATE OF CALIFORNIA

MONTGOMERY WATSON - CHAUDHARY
750 B STREET SUITE 1610
SAN DIEGO CA 92101-8131

Metric

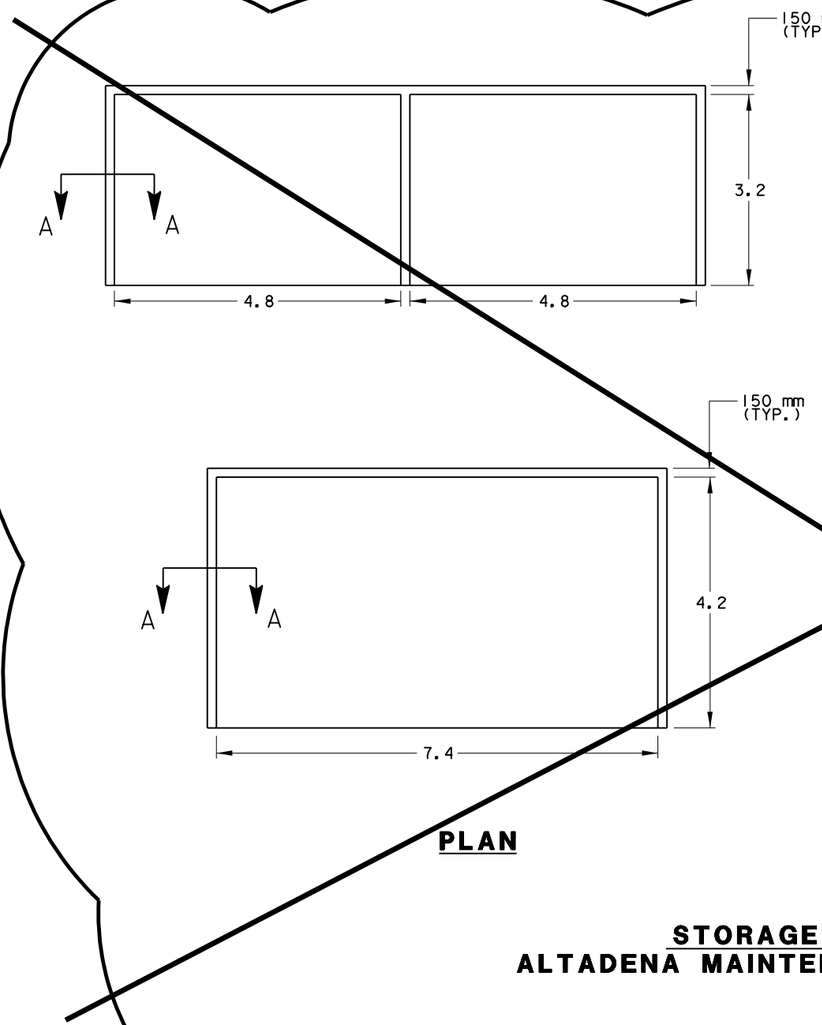

PLAN

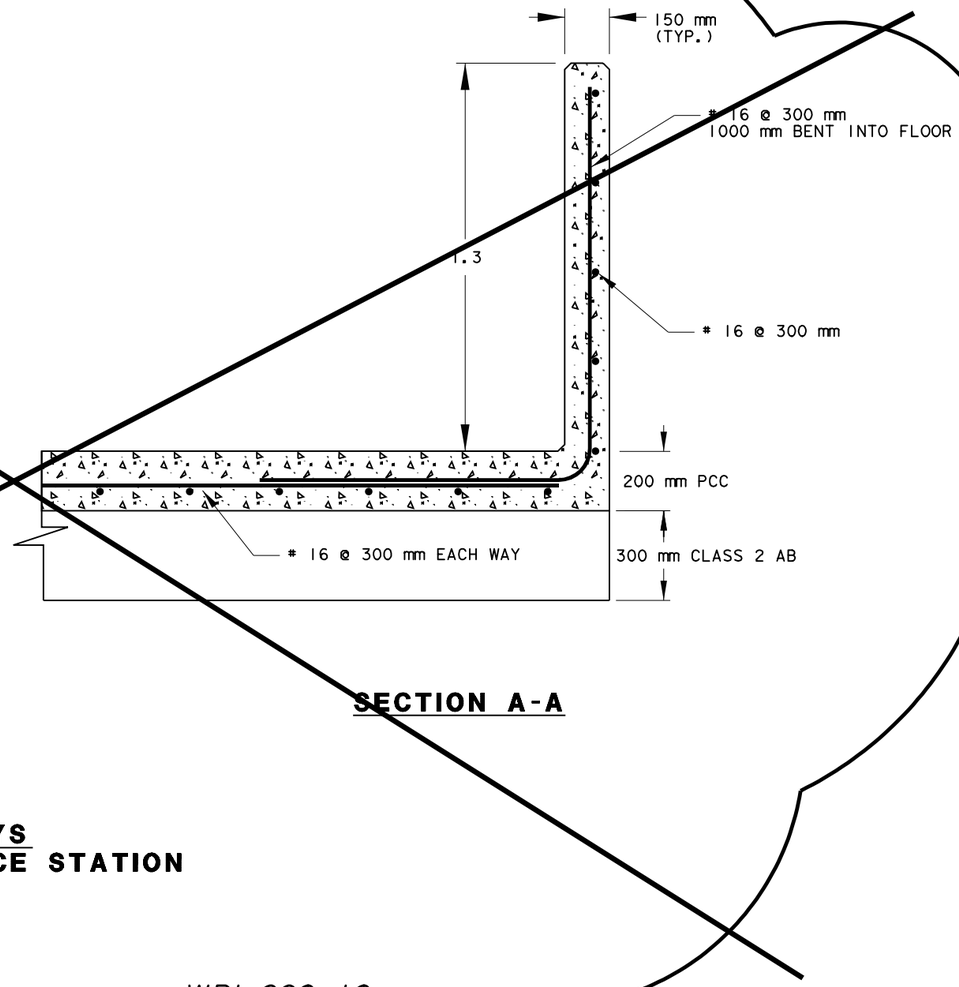

SECTION A-A

STORAGE BAYS
ALTADENA MAINTENANCE STATION

WPI CCO 10

CONSTRUCTION DETAILS

ALL DIMENSIONS ARE IN METERS UNLESS OTHERWISE SHOWN

NO SCALE

C-1

CALCULATED/ DESIGNED BY	CHECKED BY	DATE	REVISED BY	DATE REVISED
CNH	RLW	4/98	GF	10/99

PROJECT ENGINEER
RONALD L. WURZ

FOR REDUCED PLANS ORIGINAL 0 20 40 60 80

USERNAME =>$$$$$$$USER$$$$$$$

LAST REVISION DATE PLOTTED => 22-MAY-2000

DIST	COUNTY	ROUTE	KILOMETER POST TOTAL PROJECT	SHEET No	TOTAL SHEETS
07	LA	1,5,91,164 210,605	VAR	12	61

Harold T Glaser 10/15/99
REGISTERED CIVIL ENGINEER

PLANS APPROVAL DATE

REGISTERED PROFESSIONAL ENGINEER — HAROLD T. GLASER — No. 30437 — EXP. 3/31/00 — CIVIL — STATE OF CALIFORNIA

MONTGOMERY WATSON - CHAUDHARY
750 B STREET SUITE 1610
SAN DIEGO CA 92101-8131

Metric

DATE	REVISED BY	DATE REVISED
CNH 4/98	RLW 4/98	GF 10/99

CALCULATED/DESIGNED BY
CHECKED BY

PROJECT ENGINEER
RONALD L. WURZ

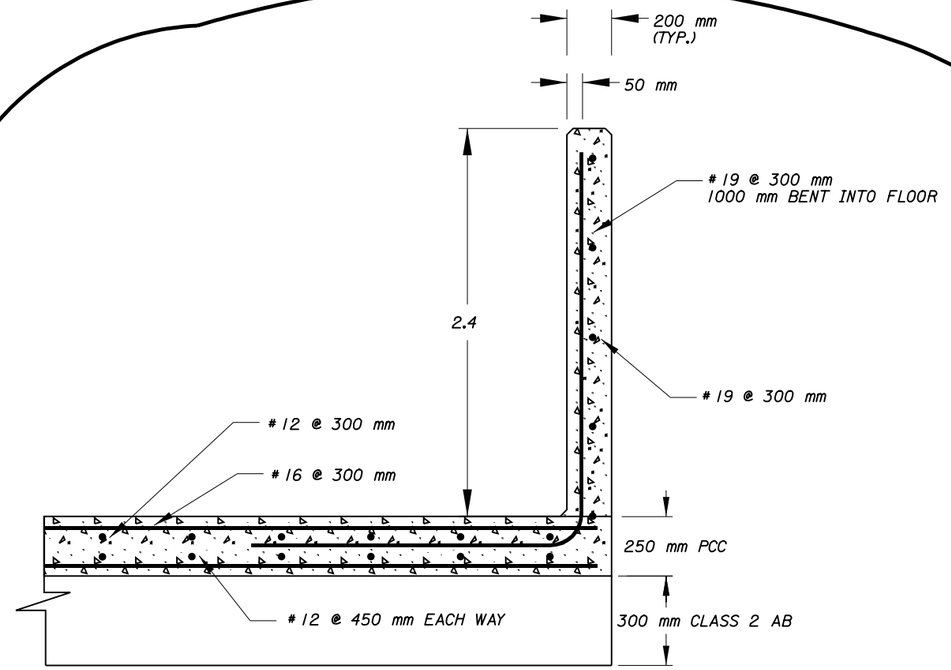

NOTE:
1. DRILL IN #19 @ 300 mm W/ EPOXY GROUT 300 mm EMBEDMENT IN WALL.
2. DRILL IN # 16 @ 300 mm W/ EPOXY GROUT 300 mm EMBEDMENT IN SLAB.

SECTION A-A

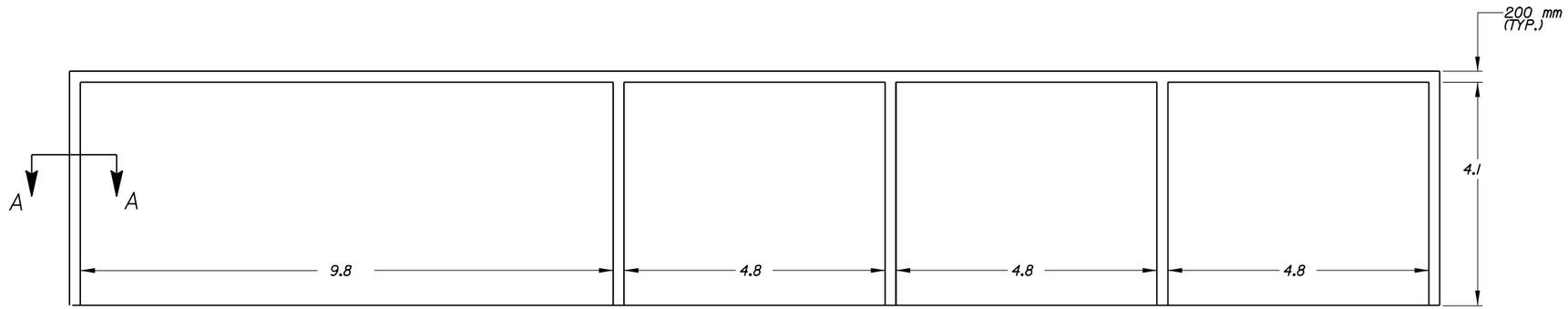

PLAN

WPI CCO 10

STORAGE BAYS
ALTADENA MAINTENANCE STATION

AS-BUILT
CONSTRUCTION DETAILS

ALL DIMENSIONS ARE IN METERS UNLESS OTHERWISE SHOWN

NO SCALE

C-1

FOR REDUCED PLANS ORIGINAL 0 20 40 60 80 USERNAME =>$$$$$$USER$$$$$$

LAST REVISION DATE PLOTTED => 22-MAY-2000

DIST	COUNTY	ROUTE	KILOMETER POST TOTAL PROJECT	SHEET No	TOTAL SHEETS
07	LA	1,5,91,164 210,605	VAR	18	61

Harold T Glaser 10/15/99
REGISTERED CIVIL ENGINEER

REGISTERED PROFESSIONAL ENGINEER — HAROLD T. GLASER — No. 30437 — EXP. 3/31/00 — CIVIL — STATE OF CALIFORNIA

PLANS APPROVAL DATE

MONTGOMERY WATSON - CHAUDHARY
750 B STREET SUITE 1610
SAN DIEGO CA 92101-8131

Metric

COORDINATE POINT	NORTHING	EASTING	ELEVATION
1	N 575600.2092	E 1984513.1302	FL 327.72
2	N 575589.6127	E 1984528.3475	FL 327.53
3	N 575583.5948	E 1984536.7223	FL 327.57
4	N 575588.9737	E 1984527.7259	FL 327.52
5	N 575588.2506	E 1984527.0226	FL 327.51
6	N 575592.9884	E 1984517.6806	TC 327.95
7	N 575579.0444	E 1984532.0180	TC 327.95
8	N 575592.6658	E 1984517.3669	FL 327.41
9	N 575578.7217	E 1984531.7043	FL 327.41
10	N 575586.9308	E 1984511.7893	FL 327.17
11	N 575572.9869	E 1984526.1267	FL 327.17
12	N 575584.5219	E 1984512.8504	FL 327.17
13	N 575564.1180	E 1984533.8223	TC 327.83
14	N 575583.6891	E 1984511.2255	FL 327.08
15	N 575581.1272	E 1984508.8396	TC 327.17
16	N 575578.3794	E 1984511.6638	TC 327.17

WPI CCO 2

ABBREVIATIONS

BFS BIOFILTRATION STRIP
BSW BIOFILTRATION SWALE
STF SWALE TO FLUME
FTS FLUME TO SWALE

ALTADENA MAINTANENCE STATION

LA CAÑADA AVE

DRAINAGE PLAN

SCALE 1:200

ALL DIMENSIONS ARE IN METERS UNLESS OTHERWISE SHOWN

This plan accurate for drainage only.

D-1

DATE	REVISED BY
CNH 4/98	RLW 4/98
CALCULATED/ DESIGNED BY	CHECKED BY

DATE REVISED 10/99 GF

PROJECT ENGINEER
RONALD L. WURZ

LAST REVISION 00.00 DATE PLOTTED => 22-MAY-2000

FOR REDUCED PLANS ORIGINAL 0 20 40 60 80 USERNAME => $$$$$$USER$$$$$$

DIST	COUNTY	ROUTE	KILOMETER POST TOTAL PROJECT	SHEET No	TOTAL SHEETS
07	LA	1,5,91,164 210.605	VAR	18	61

Harold T. Glaser 10/15/99
REGISTERED CIVIL ENGINEER

PLANS APPROVAL DATE

REGISTERED PROFESSIONAL ENGINEER — HAROLD T. GLASER — No. 30437 — EXP. 3/31/00 — CIVIL — STATE OF CALIFORNIA

MONTGOMERY WATSON - CHAUDHARY
750 B STREET SUITE 1610
SAN DIEGO CA 92101-8131

Metric

COORDINATE POINT	NORTHING	EASTING	ELEVATION
1	N 575 608.2092	E 1 984 513.1302	FL 327.72
2	N 575 589.6127	E 1 984 528.3475	FL 327.53
3	N 575 583.5948	E 1 984 536.7223	FL 327.57
4	N 575 588.9150	E 1 984 527.6689	FL 327.52
5	N 575 588.2590	E 1 984 527.0660	FL 327.51
6	N 575 593.0944	E 1 984 517.5744	TC 327.85
7	N 575 579.3744	E 1 984 532.1264	TC 327.85
8	N 575 592.7669	E 1 984 517.2658	FL 327.41
9	N 575 579.0469	E 1 984 531.8178	FL 327.41
10	N 575 572.4868	E 1 984 526.2626	FL 326.93
11	N 575 560.6860	E 1 984 538.1463	FL 327.62
12	N 575 586.9461	E 1 984 511.7778	FL 327.17
13	N 575 586.2053	E 1 984 511.0793	TC 327.62
14	N 575 573.2262	E 1 984 526.3297	FL 327.17
15	N 575 586.5211	E 1 984 511.3771	FL 326.93
16	N 575 562.2812	E 1 984 526.3090	TC 326.93
17	N 575 567.5750	E 1 984 544.6410	TC 327.62
18	N 575 579.2371	E 1 984 532.2718	TC 327.62
19	N 575 572.9799	E 1 984 526.3725	TC 327.62

WPI CCO 2

ABBREVIATIONS

BFS BIOFILTRATION STRIP
BSW BIOFILTRATION SWALE
STF SWALE TO FLUME
FTS FLUME TO SWALE

ALTADENA MAINTANENCE STATION

LA CAÑADA AVE

AS -BUILT

DRAINAGE PLAN

SCALE 1:200

D-1

ALL DIMENSIONS ARE IN METERS UNLESS OTHERWISE SHOWN

This plan accurate for drainage only.

CALCULATED/ DESIGNED BY	CHECKED BY	DATE	REVISED BY	DATE REVISED
CNH	RLW	4/98	GF	10/99

PROJECT ENGINEER
RONALD L. WURZ

LAST REVISION DATE PLOTTED => 23-MAY-2000

FOR REDUCED PLANS ORIGINAL 0 20 40 60 80 USERNAME => $$$$$$$USER$$$$$$$

DIST	COUNTY	ROUTE	KILOMETER POST TOTAL PROJECT	SHEET No	TOTAL SHEETS
07	LA	1,5,91,164 210,605	VAR	26	61

Harold T. Glaser 10/15/99
REGISTERED CIVIL ENGINEER

PLANS APPROVAL DATE

MONTGOMERY WATSON - CHAUDHARY
750 B STREET SUITE 1610
SAN DIEGO CA 92101-8131

REGISTERED PROFESSIONAL ENGINEER
HAROLD T. GLASER
No. 30437
Exp. 3/31/00
CIVIL
STATE OF CALIFORNIA

Metric

CALCULATED/ DESIGNED BY	CLP	DATE 4/98	REVISED BY	GF
CHECKED BY	RLW	4/98	DATE REVISED	10/99

PROJECT ENGINEER
RONALD L. WURZ

DRAINAGE PROFILES

ALL DIMENSIONS ARE IN METERS
UNLESS OTHERWISE SHOWN

SCALE 1:100

D-9

Station	
m^3 Exc	
m^3 Emb	

LAST REVISION
DATE PLOTTED => 22-MAY-2000

FOR REDUCED PLANS ORIGINAL 0 20 40 60 80
USERNAME =>$$$$$$USER$$$$$$

DIST	COUNTY	ROUTE	KILOMETER POST TOTAL PROJECT	SHEET No	TOTAL SHEETS
07	LA	1,5,91,164 210,605	VAR	26	61

Harold T. Glaser 10/15/99
REGISTERED CIVIL ENGINEER

PLANS APPROVAL DATE

REGISTERED PROFESSIONAL ENGINEER
HAROLD T. GLASER
No. 30437
Exp. 3/31/00
CIVIL
STATE OF CALIFORNIA

MONTGOMERY WATSON - CHAUDHARY
750 B STREET SUITE 1610
SAN DIEGO CA 92101-8131

CALCULATED/DESIGNED BY	CLP	DATE 4/98	REVISED BY	GF
CHECKED BY	RLW	4/98	DATE REVISED	10/99

PROJECT ENGINEER
RONALD L. WURZ

DRAINAGE SYSTEM 1

DRAINAGE SYSTEM 2

AS - BUILT
DRAINAGE PROFILES

ALL DIMENSIONS ARE IN METERS
UNLESS OTHERWISE SHOWN

SCALE 1:100

D-9

Station	
m³ Exc	
m³ Emb	

FOR REDUCED PLANS ORIGINAL 0 20 40 60 80

USERNAME =>$$$$$$USER$$$$$$

DATE PLOTTED => 23-MAY-2000
LAST REVISION

DIST	COUNTY	ROUTE	KILOMETER POST TOTAL PROJECT	SHEET No	TOTAL SHEETS
07	LA	1,5,91,164 210,605	VAR	31	61

Harold T. Glaser 10/15/99
REGISTERED CIVIL ENGINEER

REGISTERED PROFESSIONAL ENGINEER — HAROLD T. GLASER — No. 30437 — EXP. 3/31/00 — CIVIL — STATE OF CALIFORNIA

PLANS APPROVAL DATE

MONTGOMERY WATSON - CHAUDHARY
750 B STREET SUITE 1610
SAN DIEGO CA 92101-8131

CALCULATED/ DESIGNED BY					
CHECKED BY					
PXN	DATE 4/98	REVISED BY	GF		
RLW	4/98	DATE REVISED	10/99		

PROJECT ENGINEER
RONALD L. WURZ

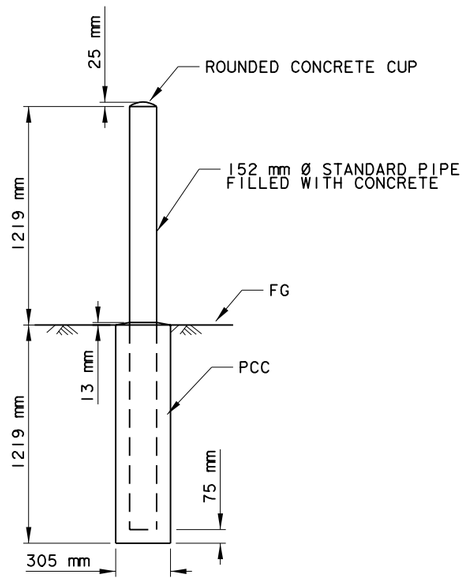

GUARDPOST

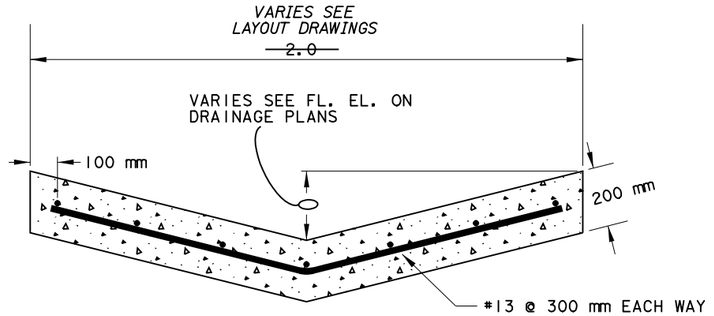

TYPICAL VALLEY GUTTER

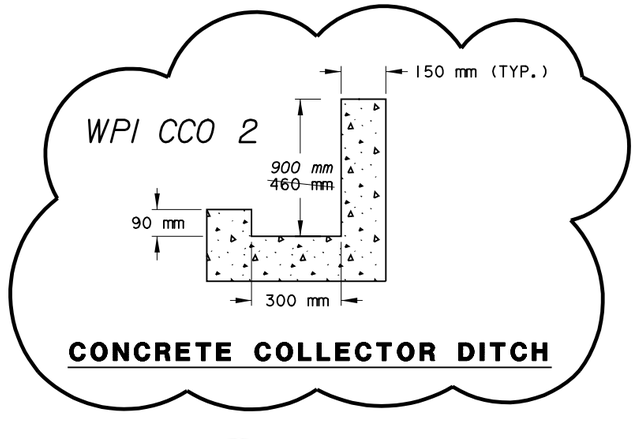

CONCRETE COLLECTOR DITCH

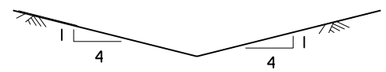

TYPICAL EARTH SWALE

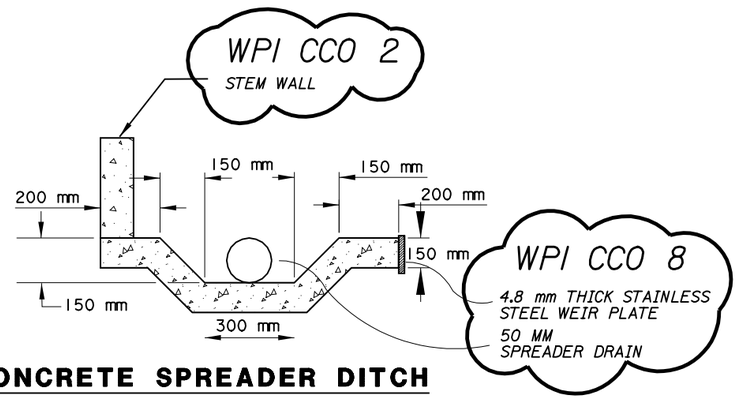

CONCRETE SPREADER DITCH

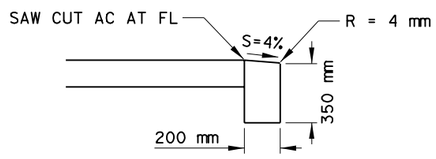

CURB DETAIL FOR BIOFILTRATION STRIP 605/91

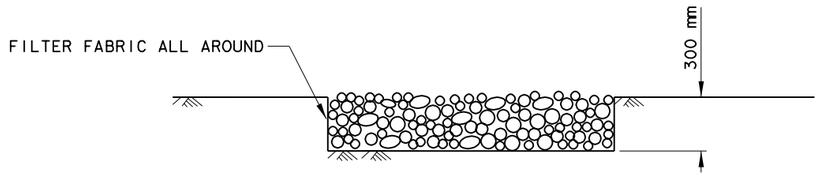

RSP BACKING NO. 3 METHOD B

AS - BUILT

DRAINAGE DETAILS

NO SCALE

ALL DIMENSIONS ARE IN METERS UNLESS OTHERWISE SHOWN

D-14

FOR REDUCED PLANS ORIGINAL 0 20 40 60 80 USERNAME =>$$$$$$$USER$$$$$$$

LAST REVISION DATE PLOTTED => 23-MAY-2000

DIST	COUNTY	ROUTE	KILOMETER POST TOTAL PROJECT	SHEET No	TOTAL SHEETS
07	LA	1,5,91,164 210,605	VAR	32	61

Harold T. Glaser 10/15/99
REGISTERED CIVIL ENGINEER

PLANS APPROVAL DATE

REGISTERED PROFESSIONAL ENGINEER HAROLD T. GLASER No. 30437 EXP. 3/31/00 CIVIL STATE OF CALIFORNIA

MONTGOMERY WATSON - CHAUDHARY
750 B STREET SUITE 1610
SAN DIEGO CA 92101-8131

Metric

DATE	REVISED BY	DATE REVISED
4/98	GF	10/99

CALCULATED/DESIGNED BY
CHECKED BY
CLP
RLW

PROJECT ENGINEER
RONALD L. WURZ

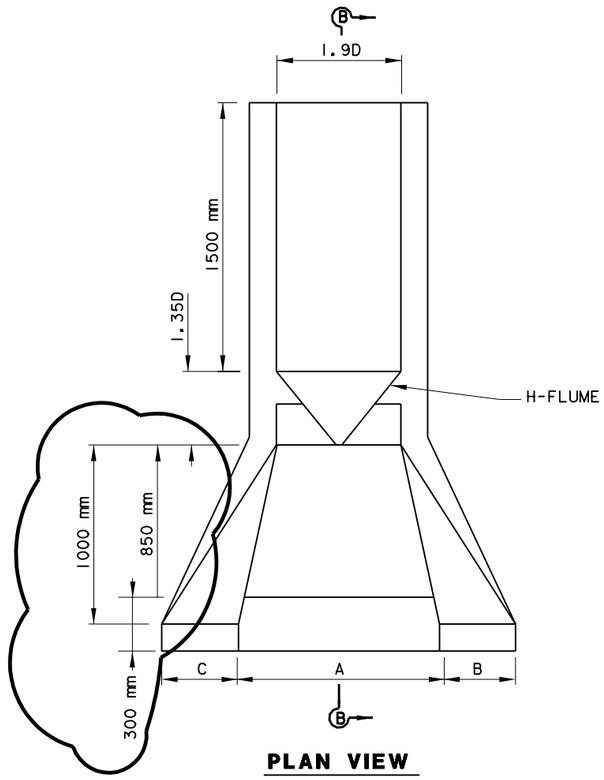

PLAN VIEW

BID ADD. I

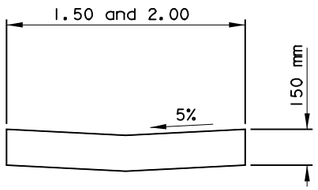

CONCRETE SWALE

DRAIN. UNIT NO.	A	B	C	D
2c	1.5	1.2	1.2	0.229
6b	1.5	0.5	0.5	0.305
7e	2.0	0.6	0.6	0.305
8b	1.0	0.6	0.6	0.305

BID ADDENDUM I

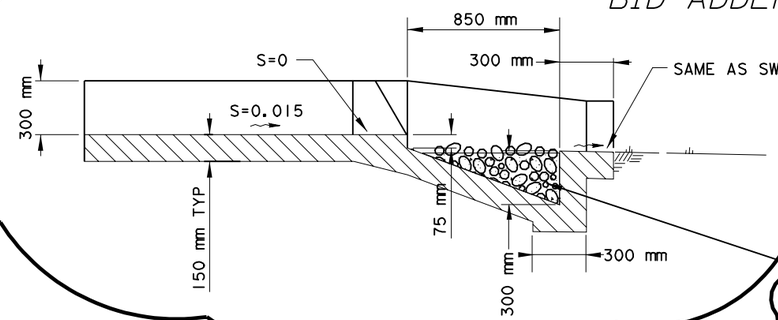

SECTION B-B

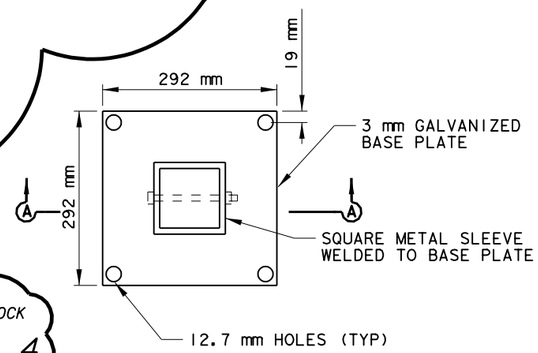

PLAN VIEW

H - FLUME TO SWALE TRANSITION

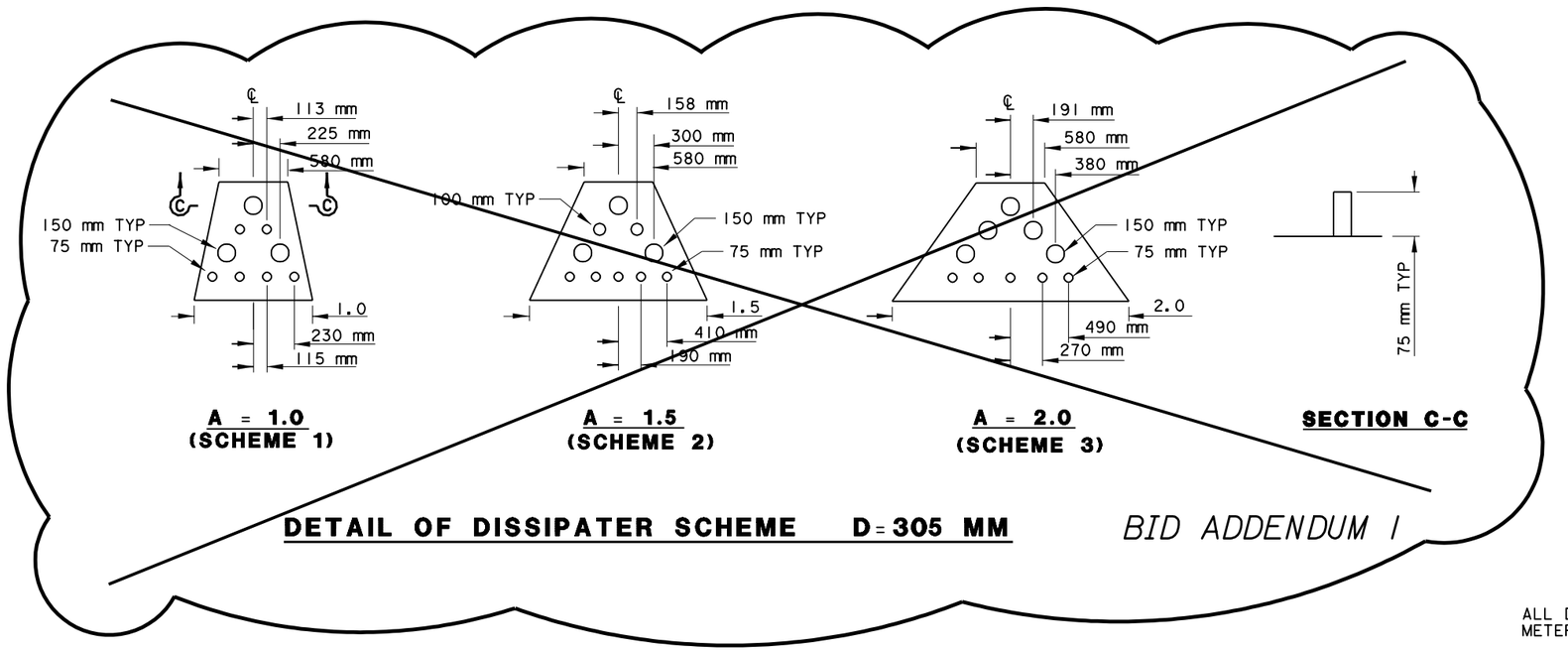

A = 1.0 (SCHEME 1)

A = 1.5 (SCHEME 2)

A = 2.0 (SCHEME 3)

SECTION C-C

DETAIL OF DISSIPATER SCHEME D=305 MM

BID ADDENDUM I

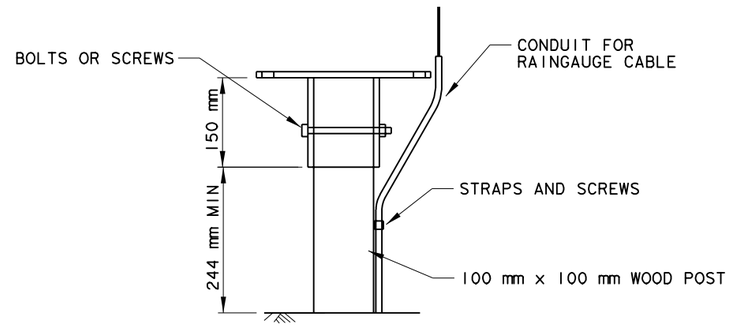

SECTION A-A

RAIN GAUGE MOUNTING PLATFORM

AS - BUILT DRAINAGE DETAILS

NO SCALE

ALL DIMENSIONS ARE IN METERS UNLESS OTHERWISE SHOWN

D-15

LAST REVISION DATE PLOTTED => 22-MAY-2000

FOR REDUCED PLANS ORIGINAL 0 20 40 60 80 USERNAME =>$$$$$$USER$$$$$$

DIST	COUNTY	ROUTE	KILOMETER POST TOTAL PROJECT	SHEET No	TOTAL SHEETS
07	LA	1,5,91,164 210,605	VAR	34	61

Harold T Glaser 10/15/99
REGISTERED CIVIL ENGINEER

PLANS APPROVAL DATE

REGISTERED PROFESSIONAL ENGINEER — HAROLD T. GLASER — No. 30437 — EXP. 3/31/00 — CIVIL — STATE OF CALIFORNIA

MONTGOMERY WATSON - CHAUDHARY
750 B STREET SUITE 1610
SAN DIEGO CA 92101-8131

Metric

	DATE	REVISED BY	DATE REVISED
CALCULATED/ DESIGNED BY	PXN 4/98	GF	10/99
CHECKED BY	RLW 4/98		

PROJECT ENGINEER
RONALD L. WURZ

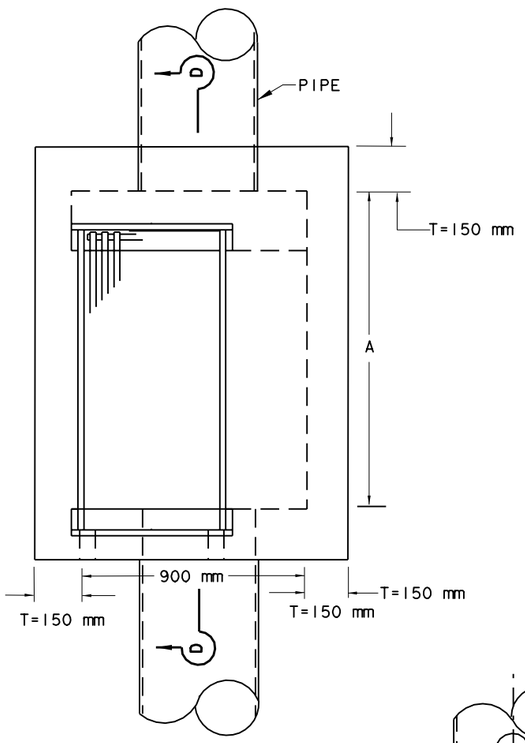

G2M INLET

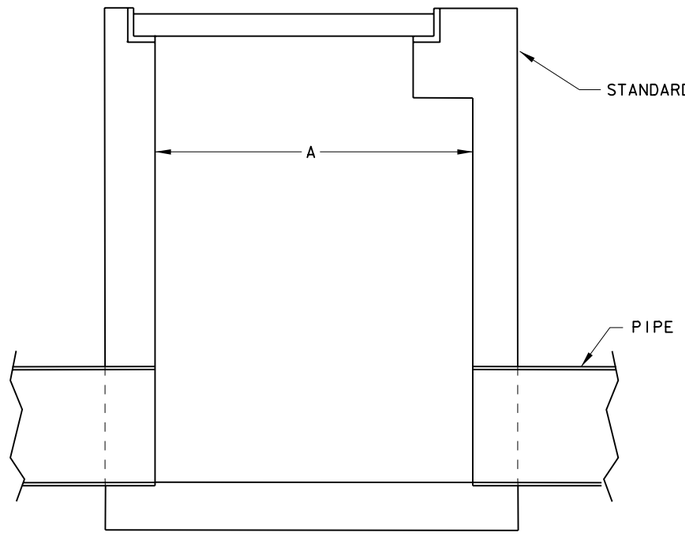

SECTION D-D

BOX DIMENSIONS

DRAINAGE UNIT NO.	A	FLUME	D
9c	1.40	x	0.203
10e	2.30		
10f	1.40	x	0.457
11e	1.40	x	0.203
11g	2.30		
12c	1.40	x	0.381
13e	1.40	x	0.305
13g	2.30		
14c	1.40	x	0.254
14e	2.30		

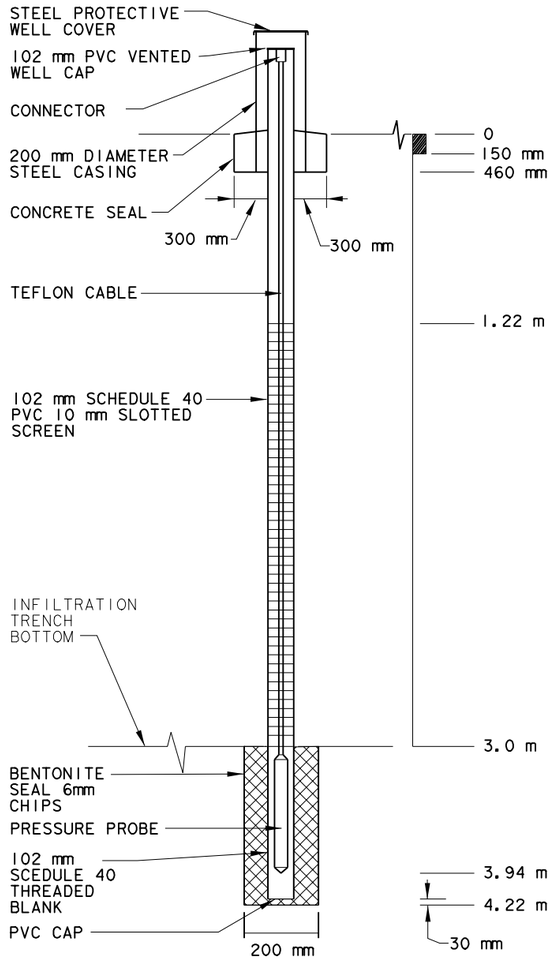

MONITORING WELL

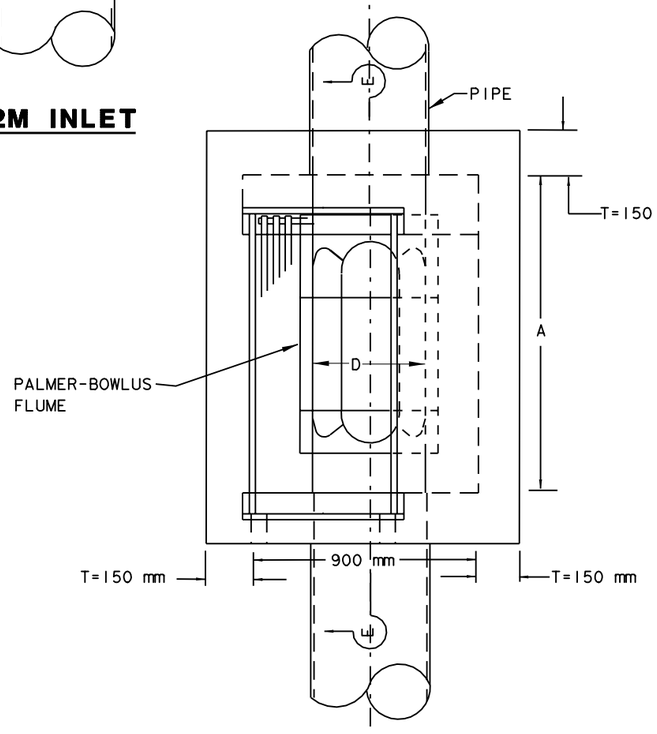

G2M INLET W/ FLUME

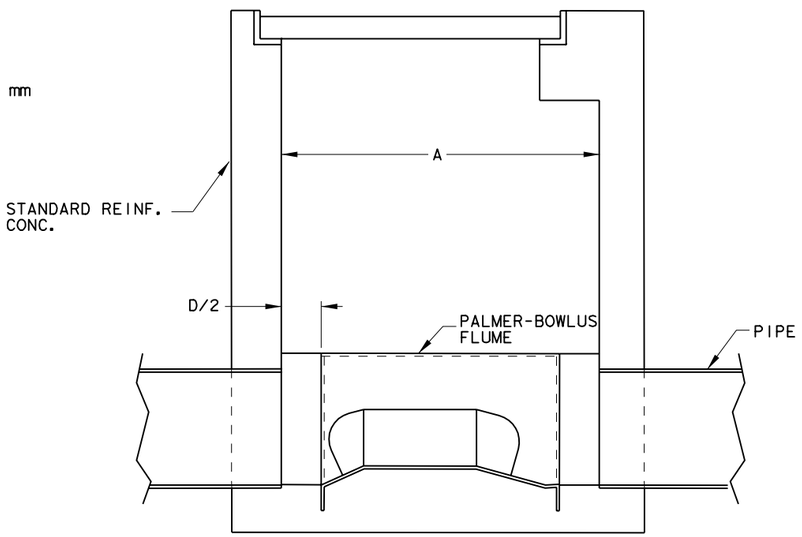

SECTION E-E

AS - BUILT DRAINAGE DETAILS

ALL DIMENSIONS ARE IN METERS UNLESS OTHERWISE SHOWN

NO SCALE

D-17

LAST REVISION DATE PLOTTED => 22-MAY-2000

FOR REDUCED PLANS ORIGINAL 0 20 40 60 80 USERNAME =>$$$$$$USER$$$$$$

DIST	COUNTY	ROUTE	KILOMETER POST TOTAL PROJECT	SHEET No	TOTAL SHEETS
07	LA	1,5,91,164 210,605	VAR	35	61

Harold T Glaser 10/15/99
REGISTERED CIVIL ENGINEER

PLANS APPROVAL DATE

REGISTERED PROFESSIONAL ENGINEER — HAROLD T. GLASER — No. 30437 — EXP. 3/31/00 — CIVIL — STATE OF CALIFORNIA

MONTGOMERY WATSON - CHAUDHARY
750 B STREET SUITE 1610
SAN DIEGO CA 92101-8131

Metric

CALCULATED/ DESIGNED BY	CLP	DATE 4/98	REVISED BY	GF
CHECKED BY	RLW	4/98	DATE REVISED	10/99

PROJECT ENGINEER
RONALD L. WURZ

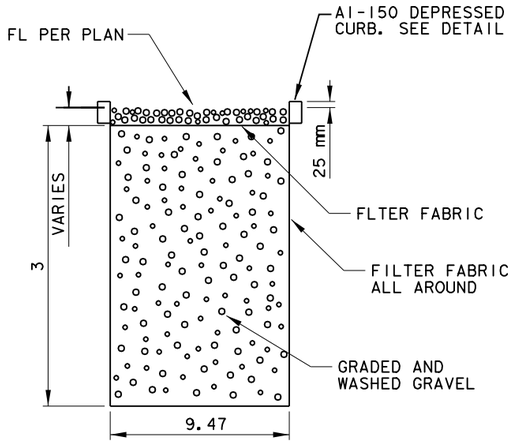

INFILTRATION TRENCH

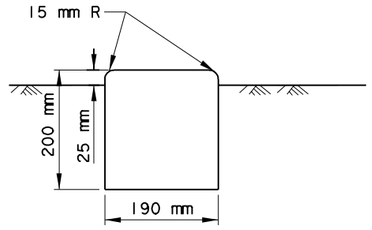

A1-150 DEPRESSED CURB

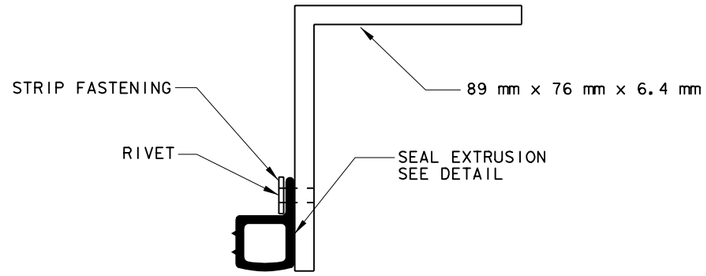

DETAIL OF EXTRUSION INSTALLATION

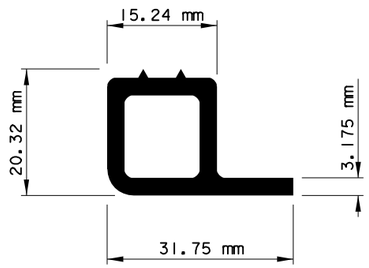

SEAL EXTRUSION

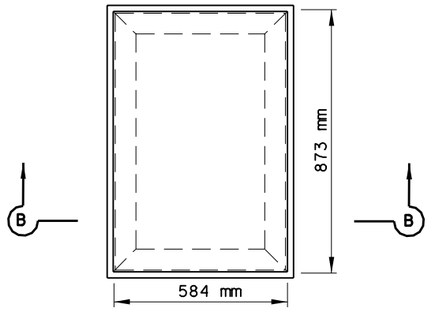

GRATE COVER

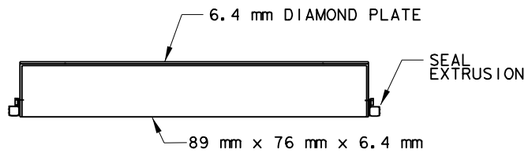

SECTION B-B

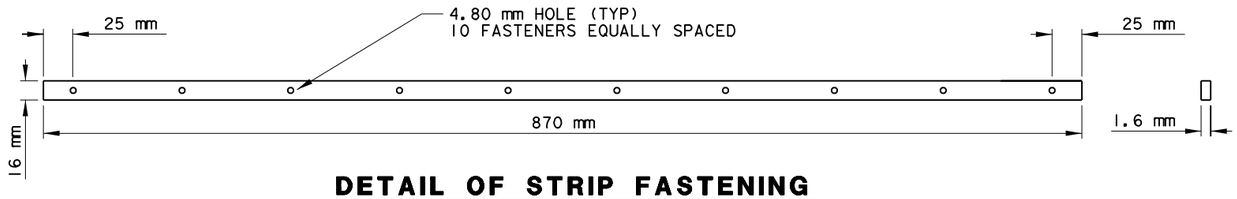

DETAIL OF STRIP FASTENING

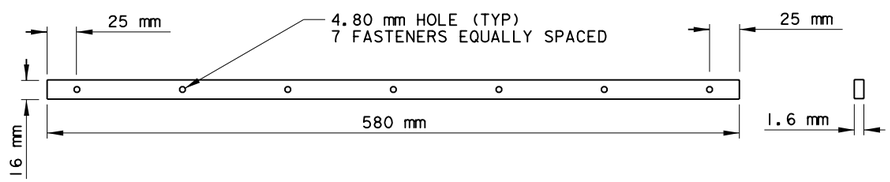

DETAIL OF STRIP FASTENING

AS - BUILT
DRAINAGE DETAILS

NO SCALE

ALL DIMENSIONS ARE IN METERS UNLESS OTHERWISE SHOWN

D-18

LAST REVISION 00-00-00 DATE PLOTTED => 22-MAY-2000

FOR REDUCED PLANS ORIGINAL 0 20 40 60 80 USERNAME =>$$$$$$$USER$$$$$$$

DIST	COUNTY	ROUTE	KILOMETER POST TOTAL PROJECT	SHEET No	TOTAL SHEETS
07	LA	1,5,91,164 210,605	VAR	36	61

Harold T Glaser 10/15/99
REGISTERED CIVIL ENGINEER

PLANS APPROVAL DATE

REGISTERED PROFESSIONAL ENGINEER — HAROLD T. GLASER — No. 30437 — EXP. 3/31/00 — CIVIL — STATE OF CALIFORNIA

MONTGOMERY WATSON - CHAUDHARY
750 B STREET SUITE 1610
SAN DIEGO CA 92101-8131

Metric

CALCULATED/ DESIGNED BY	DATE	REVISED BY	GF
CHECKED BY	RLW 4/98	DATE REVISED	10/99

PROJECT ENGINEER
RONALD L. WURZ

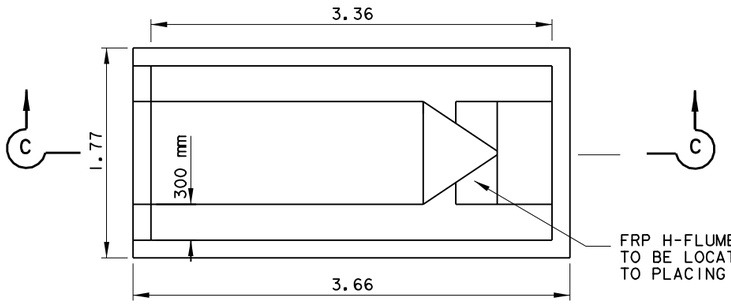

PLAN

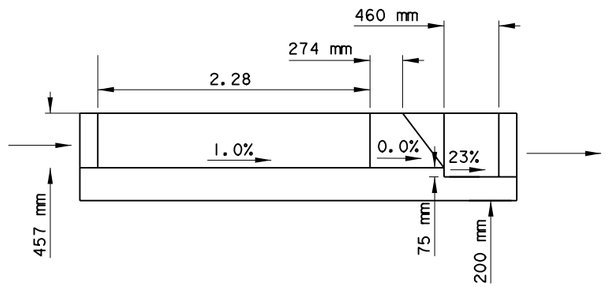

SECTION C-C

457 H-FLUME (MOD) STRUCTURE

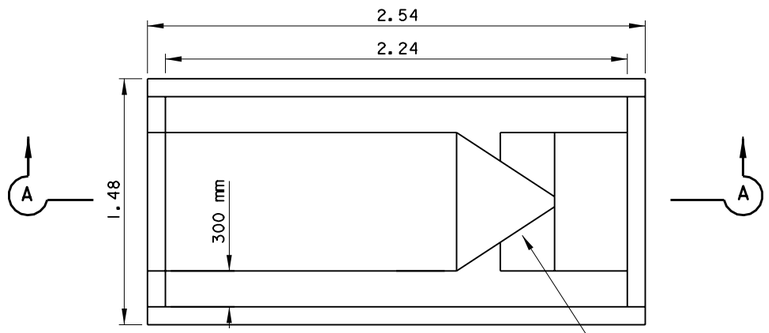

PLAN

SECTION A-A

305 H-FLUME (MOD) STRUCTURE

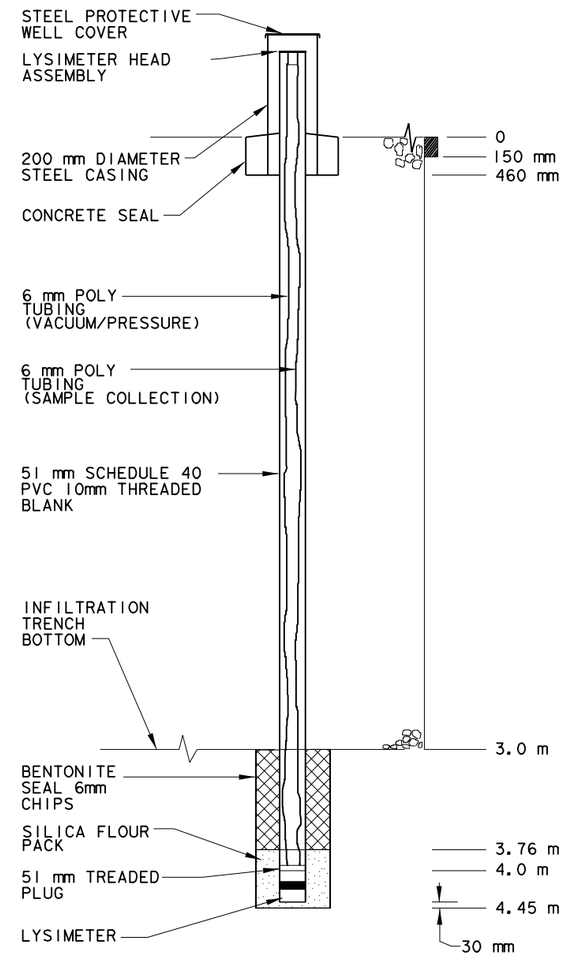

LYSIMETER DETAIL

AS - BUILT DRAINAGE DETAILS

NO SCALE

ALL DIMENSIONS ARE IN METERS UNLESS OTHERWISE SHOWN

D-19

LAST REVISION DATE PLOTTED => 22-MAY-2000

FOR REDUCED PLANS ORIGINAL 0 20 40 60 80 USERNAME =>$$$$$$USER$$$$$$

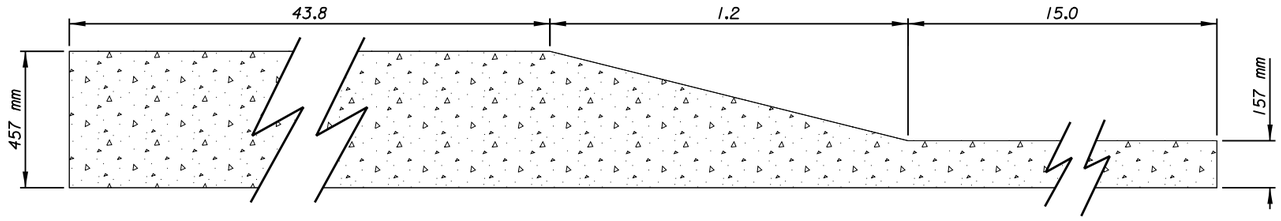

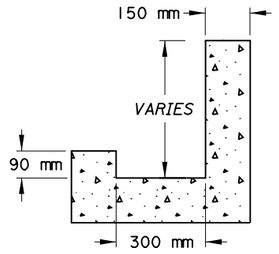

CONCRETE LINED DITCH

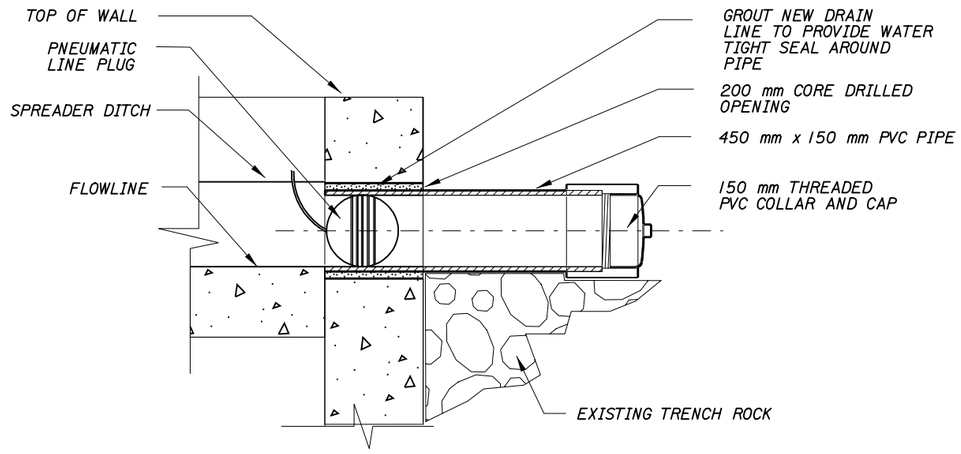

SPREADER DRAIN SECTION

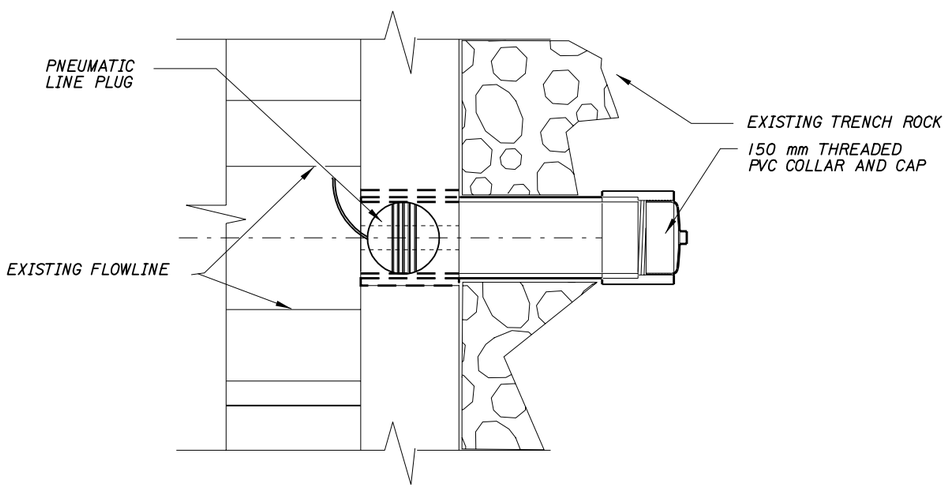

SPREADER DRAIN PLAN

POST CONSTRUCTION

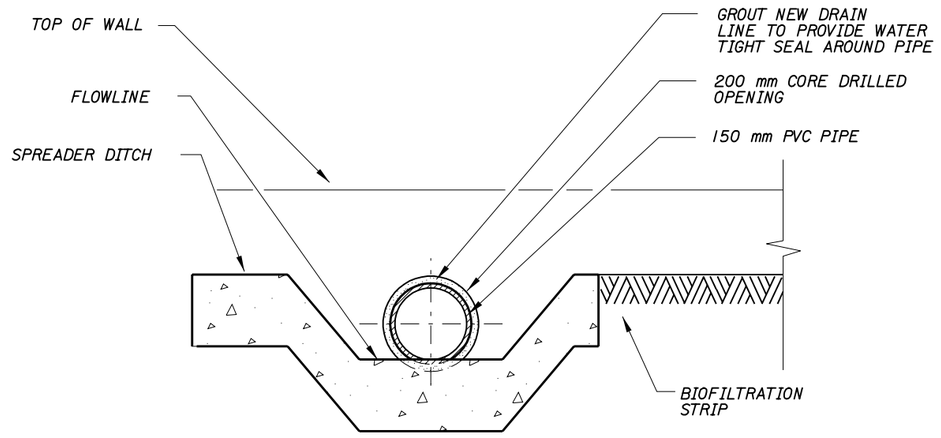

SPREADER DRAIN SECTION

AS - BUILT

DRAINAGE DETAILS

NO SCALE

ALL DIMENSIONS ARE IN METERS UNLESS OTHERWISE SHOWN

D-20

DIST	COUNTY	ROUTE	KILOMETER POST TOTAL PROJECT	SHEET No	TOTAL SHEETS
07	LA	1,5,91,164 210,605	VAR	37	61

Harold T. Glaser 10/15/99
REGISTERED CIVIL ENGINEER

PLANS APPROVAL DATE

REGISTERED PROFESSIONAL ENGINEER — HAROLD T. GLASER — No. 30437 — EXP. 3/31/00 — CIVIL — STATE OF CALIFORNIA

MONTGOMERY WATSON - CHAUDHARY
750 B STREET SUITE 1610
SAN DIEGO CA 92101-8131

DATE	REVISED BY	DATE REVISED
4/98	GF	10/99

CALCULATED/DESIGNED BY: PXN 4/98
CHECKED BY: RLW 4/98

PROJECT ENGINEER
RONALD L. WURZ

LAST REVISION 00-00-00 DATE PLOTTED => 23-MAY-2000

FOR REDUCED PLANS ORIGINAL 0 20 40 60 80 USERNAME =>$$$$$$$USER$$$$$$$

DIST	COUNTY	ROUTE	KILOMETER POST TOTAL PROJECT	SHEET No	TOTAL SHEETS
07	LA	1,5,91,164 210,605	VAR	38	61

Harold T Glaser 10/15/99
REGISTERED CIVIL ENGINEER

REGISTERED PROFESSIONAL ENGINEER HAROLD T. GLASER No. 30437 EXP. 3/31/00 CIVIL STATE OF CALIFORNIA

PLANS APPROVAL DATE

MONTGOMERY WATSON - CHAUDHARY
750 B STREET SUITE 1610
SAN DIEGO CA 92101-8131

Metric

	DATE	REVISED BY
CALCULATED/ DESIGNED BY		
CHECKED BY	CLP 4/98	GF 10/98
	RLW 4/98	DATE REVISED

PROJECT ENGINEER
RONALD L. WURZ

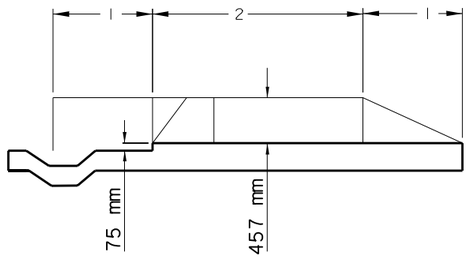

SECTION E-E

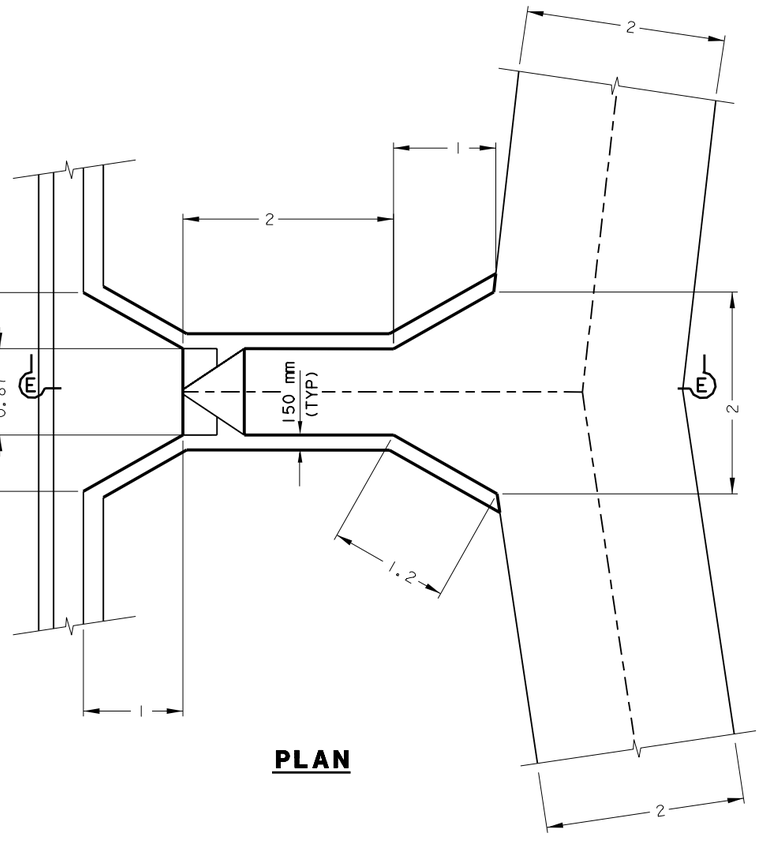

PLAN

457 H-FLUME STRUCTURE
ALTADENA MAINTENANCE STATION

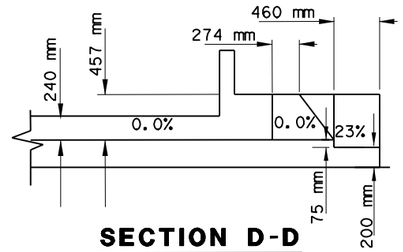

SECTION D-D

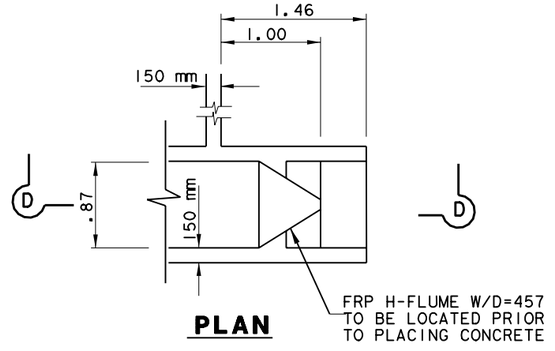

PLAN

457 H-FLUME (MOD) STRUCTURE
ALTADENA MAINTENANCE STATION

AS - BUILT
DRAINAGE DETAILS

NO SCALE

ALL DIMENSIONS ARE IN METERS UNLESS OTHERWISE SHOWN

D-21

LAST REVISION DATE PLOTTED => 22-MAY-2000

FOR REDUCED PLANS ORIGINAL 0 20 40 60 80 USERNAME => $$$$$$USER$$$$$$

DIST	COUNTY	ROUTE	KILOMETER POST TOTAL PROJECT	SHEET No	TOTAL SHEETS
07	LA	1,5,91,164 210,605	VAR	39	61

Harold T Glaser 10/15/99
REGISTERED CIVIL ENGINEER

PLANS APPROVAL DATE

REGISTERED PROFESSIONAL ENGINEER HAROLD T. GLASER No. 30437 EXP. 3/31/00 CIVIL STATE OF CALIFORNIA

MONTGOMERY WATSON - CHAUDHARY
750 B STREET SUITE 1610
SAN DIEGO CA 92101-8131

Metric

DRAINAGE QUANTITIES

DRAINAGE SYSTEM NO.	DRAINAGE UNIT	MINOR CONCRETE (MINOR STRUCTURE)	MISCELLANEOUS IRON & STEEL	600-12 Grate (N)	COVER (N)	FLUME TO SWALE TRANSITION (N)	SWALE TO FLUME TRANSITION (N)	RSP ENERGY DISSIPATER (N)	PALMER-BOWLUS FLUME	H-FLUME	BIOFILTRATION SWALE (N)	CONCRETE LINED DITCH (N)	VALLEY GUTTER (N)	REMOVE EXISTING PIPE	REMOVE EXISTING INLET		REMOVE HEADWALL	ABANDON PIPE		CMP 22 1/2° ELBOW	FLARED END SECTION (FES)	450 mm CMP PIPE	100 mm PLASTIC PIPE	150 mm PLASTIC PIPE	200 mm PLASTIC PIPE	300 mm PLASTIC PIPE	450 mm PLASTIC PIPE	FOSSIL FILTER INSERT	STREAMGUARD INSERT	CONNECT TO EXIST INLET	TRANSITION STRUCTURE (N)	RSP BACKING #3 METHOD B	CONCRETE SPREADER DITCH (N)	CONCRETE COLLECTOR DITCH (N)	BIOFILTRATION STRIP (N)	INFILTRATION TRENCH (N)	EARTH SWALE	MAXIMUM COVER	HEIGHT OF INLET "H"	DESCRIPTION	DRAINAGE PLAN SHEET NO.	DRAINAGE SYSTEM NO.	DRAINAGE UNIT
		m3	kg	EA	EA	EA	EA	EA	EA	EA	m	m	m	m	EA		EA	m		EA	EA	m	m	m	m	m	m	EA	EA	EA	EA	m3	m	m	m2	m3	m	m	m				
1	a	14.0	475										35																											VALLEY GUTTER	D1	1	a
	b	0.4																												1								TRANSITION STRUCTURE			b
	c	1.1								1																												457 H-FLUME			c
	d	3.0																														20						CONCRETE SPREADER DITCH			d
	e																																	160				BIOFILTRATION STRIP			e
	f	2.0 3.0																																20				CONCRETE COLLECTOR DITCH			f
	g	0.5								1																												457 H-FLUME			g
	h																																		480				INFILTRATION TRENCH			h
1	1	1.2 0																								12														OVERFLOW DRAIN	D1	1	1
2	a	1.4						1																																HEADWALL RSP DISSIPATER	D2	2	a
	b	0.4																												1								TRANSITION STRUCTURE			b
	c	0.6				1				1																												FTS TRANSITION			c
	d										40																												BIOFILTRATION SWALE			d
	e	0.5					1			1																													STF TRANSITION			e
2	f																															1							RSP BACKING #3 METHOD B	D2	2	f
3	a	0.6 10.3										60																												CONCRETE LINED DITCH	D2	3	a
	b																																	480				BIOFILTRATION STRIP			b
	c	6.0								1																													305 H-FLUME			c
	d																															1							RSP BACKING #3 METHOD B			d
3	e																																			68				EARTH SWALE	D2	3	e
4	a	0.7								1																														305 H-FLUME	D2	4	a
4	b	2.8	109										7																											VALLEY GUTTER	D2	4	d
5	a	0.8	148	1																																		1.1	GI INLET	D2	5	a
	b																																							450 mm PLASTIC PIPE			b
	c	0.1													1																									REMOVE EXIST INLET			c
5	d																	14																						ABANDON EXIST PIPE	D2	5	d
6	a	1.4 3.0	79					1																																HEADWALL RSP DISSIPATER	D3	6	a
	b	0.6				1				1																													FTS TRANSITION			b
	c										20																												BIOFILTRATION SWALE			c
	d	0.5					1			1																													STF TRANSITION			d
6	e																1																						REMOVE HEADWALL	D3	6	e
7	a																			1		2																		22½ CMP ELBOW	D4	7	a
	b																				1	1																		FLARED END SECTION (FES)			b
	c	1.4						1																																RSP ENERGY DISSIPATER			c
	d	0.3																												1								TRANSITION STRUCTURE			d
	e	0.7				1				1																													FTS TRANSITION			e
	f										35 40																													BIOFILTRATION SWALE			f
7	g	0.6					1			1																														STF TRANSITION	D4	7	g
SHEET TOTAL		45.7 54.7	132 882	1		3	3	3		10	95 100	60	42		1		1	14		1	1	3				12	25				3	2	20	20	640	480	68						

AS - BUILT

(N) NOT A SEPARATE PAY ITEM, FOR INFORMATION ONLY.

ALL DIMENSIONS ARE IN METERS UNLESS OTHERWISE SHOWN

DRAINAGE QUANTITIES

NO SCALE

D-22

DATE	REVISED BY
4/98	GF
4/98	DATE REVISED 10/99
PXN 4/98	
RLW 4/98	
CALCULATED/ DESIGNED BY	
CHECKED BY	

PROJECT ENGINEER
RONALD L. WURZ

LAST REVISION DATE PLOTTED => 22-MAY-2000

FOR REDUCED PLANS ORIGINAL 0 20 40 60 80 USERNAME => $$$$$$USER$$$$$$

DIST	COUNTY	ROUTE	KILOMETER POST TOTAL PROJECT	SHEET No	TOTAL SHEETS
07	LA	1,5,91,164 210,605	VAR	47	61

Harold T Glaser 10/15/99
REGISTERED CIVIL ENGINEER

PLANS APPROVAL DATE

REGISTERED PROFESSIONAL ENGINEER HAROLD T. GLASER No. 30437 EXP. 3/31/00 CIVIL STATE OF CALIFORNIA

MONTGOMERY WATSON - CHAUDHARY
750 B STREET SUITE 1610
SAN DIEGO CA 92101-8131

Metric

PLACE ASPHALT CONCRETE DIKE

LOCATION	TYPE E m	TYPE C m
S 5/605 INTERCHANGE	~~110~~ 0	-
N 605/CARSON & DEL AMO INTERCHANGE	~~58~~ 57	57
N 605/91 INTERCHANGE	~~40~~ 39	-
TOTAL	~~208~~ 96	57

CHAIN LINK FENCE

LOCATION	CL-1.8 M
ALTADENA MAINTENANCE STATION	~~61~~ 67
TOTAL	~~61~~ 67

MINOR CONCRETE (MINOR STRUCTURE)

LOCATION	m^3
ALTADENA MAINTENANCE STATION	~~3.19~~ 28.7
N 605/91 INTERCHANGE	1.3
W 91/CERRITOS MAINTENANCE STATION	0.6
S 5/605 INTERCHANGE	0.6
N 605/CARSON & DEL AMO INTERCHANGE	0.6
FOOTHILL MAINTENANCE STATION	*5.7*
LAS FLORES MAINTENANCE STATION	*5.4*
ROSEMEAD MAINTENANCE STATION	*3.5*
TOTAL	~~6.29~~ 46.4

1.5 M CHAIN LINK GATE

LOCATION	TYPE CL-1.8 ~~EA~~ m
ALTADENA MAINTENANCE STATION	~~2~~ 3
TOTAL	~~2~~ 3

3 M CHAIN LINK GATE

LOCATION	*TYPE CL-1.8 EA*
W 91/CERRITOS MAINTENANCE STATION	*1*
TOTAL	*1*

REMOVE AC DIKE

LOCATION	m
S 5/605 INTERCHANGE	~~110~~ 0
N 605/CARSON & DEL AMO INTERCHANGE	~~115~~ 114
N 605/91 INTERCHANGE	98
TOTAL	~~323~~ 212

CALCULATED/ DESIGNED BY	CLP	DATE 4/98	REVISED BY	GF	10/99
CHECKED BY	RLW	4/98	DATE REVISED		

PROJECT ENGINEER
RONALD L. WURZ

AS-BUILT

SUMMARY OF QUANTITIES

ALL DIMENSIONS ARE IN METERS UNLESS OTHERWISE SHOWN

NO SCALE

Q-1

LAST REVISION DATE PLOTTED => 22-MAY-2000

FOR REDUCED PLANS ORIGINAL 0 20 40 60 80 USERNAME =>$$$$$$$USER$$$$$$$

DIST	COUNTY	ROUTE	KILOMETER POST TOTAL PROJECT	SHEET No	TOTAL SHEETS
07	LA	1,5,91,164 210,605	VAR	48	61

Harold I Glaser 10/15/99
REGISTERED CIVIL ENGINEER

PLANS APPROVAL DATE

REGISTERED PROFESSIONAL ENGINEER HAROLD T. GLASER No. 30437 EXP. 3/31/00 CIVIL STATE OF CALIFORNIA

MONTGOMERY WATSON - CHAUDHARY
750 B STREET SUITE 1610
SAN DIEGO CA 92101-8131

DATE	REVISED BY	DATE REVISED	CALCULATED/ DESIGNED BY	CHECKED BY
4/98	GF	10/99	CLP	RLW

PROJECT ENGINEER
RONALD L. WURZ

ROADWAY ITEMS

LOCATION & DESCRIPTION	ASPHALT CONC (TYPE B) m3	AGGREGATE BASE (CLASS 2) m3	REMOVE ASPHALT CONCRETE m2	ROADWAY EXCAVATION m3
ALTADENA MAINTENANCE STATION	~~-~~ 19	33	~~570~~ 780	-
N 605/91 INTERCHANGE	~~5~~ 15	~~16~~ 66	-	~~31~~ 85
S 5/605 INTERCHANGE	~~24~~ 0	~~85~~ 0	-	~~23~~ 0
N 605/CARSON & DEL AMO INTERCHANGE	~~20~~ 16	~~71~~ 66	-	~~102~~ 19
FOOTHILL MAINTENANCE STATION	5		89	
LAS FLORES MAINTENANCE STATION	7		170	
ROSEMEAD MAINTENANCE STATION	5		106	
TOTAL	~~49~~ 67	~~205~~ 165	~~570~~ 1,145	~~156~~ 104

TRAFFIC HANDLING

LOCATION & DESCRIPTION	TEMP RAILING (TYPE K) WITH SCUPPERS M	CHANNELIZER (SURFACE MOUNTED) EA	TEMPORARY CRASH CUSHION MODULES ARRAY TG EA	TC EA	TJ EA	TCA EA
N 605/91 INTERCHANGE	140	16	1	2	-	
S 5/605 INTERCHANGE	161	16	~~1~~ 0	-	-	1
N 605/CARSON & DEL AMO INTERCHANGE	110	16	1	-	-	
TOTAL	411	48	~~3~~ 2	2	-	1

EARTHWORK QUANTITIES

LOCATION	EXCAVATION m3	UNSUITABLE MATERIAL m3	IMPORT BORROW m3	REMOVE EXISTING V-DITCH m
ALTADENA MAINTENANCE STATION	~~830~~ 656			
N 605/91 INTERCHANGE		~~137~~ 0	~~119~~ 67	
W 91/CERRITOS MAINTENANCE STATION			40	~~25~~ 28
S 5/605 INTERCHANGE	~~34~~ 0		~~637~~ 0	
N 605/CARSON & DEL AMO INTERCHANGE	~~63~~ 0		~~72~~ 46	
TOTAL	~~927~~ 656	~~137~~ 0	~~868~~ 153	~~25~~ 28

AS-BUILT

SUMMARY OF QUANTITIES

ALL DIMENSIONS ARE IN METERS UNLESS OTHERWISE SHOWN

NO SCALE

Q-2

LAST REVISION DATE PLOTTED => 22-MAY-2000

FOR REDUCED PLANS ORIGINAL 0 20 40 60 80 USERNAME =>$$$$$$USER$$$$$$

DIST	COUNTY	ROUTE	KILOMETER POST TOTAL PROJECT	SHEET No	TOTAL SHEETS
07	LA	1,5,91,164 210.605	VAR	49	61

Harold T. Glaser 10/15/99
REGISTERED CIVIL ENGINEER

PLANS APPROVAL DATE

REGISTERED PROFESSIONAL ENGINEER HAROLD T. GLASER No. 30437 EXP. 3/31/00 CIVIL STATE OF CALIFORNIA

MONTGOMERY WATSON - CHAUDHARY
750 B STREET SUITE 1610
SAN DIEGO CA 92101-8131

Metric

CALCULATED/ DESIGNED BY	CLP	DATE 4/98	REVISED BY	GF	DATE REVISED 10/99
CHECKED BY	RLW	4/98			

PROJECT ENGINEER
RONALD L. WURZ

RETAINING WALL QUANTITIES

WALL	STATION LIMITS	STRUCTURAL CONCRETE, RETAINING WALL (m3)	BAR REINF STEEL (RW) (kg)	PERVIOUS BACKFILL MATERIAL * (m3)	NONWOVEN FILTER FABRIC (m3)
"RW102"	102+5.40 - 102+33.36	22	1100	5	82
	TOTAL	22	1100	5	82

CABLE RAILING

WALL	STATION LIMITS	m
"RW102"	102+5.40 - 102+33.36	28
	TOTAL	28

BID ADD. 1

INFILTRATION TRENCH

LOCATION	GRADED AND WASHED GRAVEL (m3)	FILTER FABRIC (m2)	SHEET PILING (m2)
ALTADENA MAINTENANCE STATION	~~480~~ 607	~~542~~ 515	~~171~~ 170
TOTAL	~~480~~ 607	~~542~~ 515	~~171~~ 170

METAL BEAM GUARD RAILING

LOCATION	CABLE ANCHOR ASSEMBLY				TERMINAL SYSTEM		MBGR
	BREAKAWAY						
	TYPE B					TYPE SRT	
	EA					EA	m
N 605/CARSON & DEL AMO SEPARATION	1					1	69
TOTAL	1					1	69

STORAGE BAYS

LOCATION	STRUCTURAL CONCRETE (m3)	BAR REINF STEEL (kg)	REMOVE EXISTING BAY EA
ALTADENA MAINTENANCE STATION	~~20~~ 49	~~600~~ 3529	~~3~~ 6
TOTAL	~~20~~ 49	~~600~~ 3529	~~3~~ 6

MONITORING

LOCATION	MONITORING WELL EA	LYSIMETER EA		RAIN GAUGE PLATFORM EA
ALTADENA MAINTENANCE STATION	1	1		
FOOTHILL MAINTENANCE STATION				1
LAS FLORES MAINTENANCE STATION				1
ROSEMEAD MAINTENANCE STATION				1
TOTAL	1	1		3

LANDSCAPING

LOCATION	EROSION CONTROL SEED (ha)	BMP SEED (ha)	TOPSOIL (m3)	REMOVE EXIST TREE EA
ALTADENA MAINTENANCE STATION		~~0.016~~ 0.015	~~96~~ 107	
N 605/91 SEPARATION	0.321	~~0.068~~ 0.054	~~324~~ 132	
W 91 BEHIND CERRITOS MAINTENANCE STATION	0.011	~~0.005~~ 0.003	18	
S 5/605 SEPARATION	0.122	~~0.015~~ 0.008	~~21~~ 48	1
N 605/CARSON & DEL AMO SEPARATION	0.040	~~0.011~~ 0.005	~~21~~ 32	1
TOTAL	0.494	~~0.115~~ 0.085	~~480~~ 337	2

AS-BUILT

SUMMARY OF QUANTITIES

NO SCALE

ALL DIMENSIONS ARE IN METERS UNLESS OTHERWISE SHOWN

Q-3

LAST REVISION DATE PLOTTED => 22-MAY-2000

FOR REDUCED PLANS ORIGINAL 0 20 40 60 80 USERNAME => $$$$$$USER$$$$$$0733

DIST	COUNTY	ROUTE	KILOMETER POST TOTAL PROJECT	SHEET No	TOTAL SHEETS
07	LA	1,5,91,164 210,605	VAR	53	61

REGISTERED CIVIL ENGINEER 10/15/99

PLANS APPROVAL DATE

REGISTERED PROFESSIONAL ENGINEER GREGORY J. DEBOIS No. E 14298 Exp. 6/30/01 ELECTRICAL STATE OF CALIFORNIA

MONTGOMERY WATSON - CHAUDHARY
750 B STREET SUITE 1610
SAN DIEGO CA 92101-8131

NOTES TO CONTRACTOR

1. FIELD CONFIRMATION OF FINAL EQUIPMENT AND TERMINATIONS IS REQUIRED BY CONTRACTOR.
2. SEE E-9 FOR TYPICAL SINGLE LINE DRAWING.

CONDUIT NOTES:

1. NOT USED
2. 50 mmC PCV SCH 40, 2 #10 + 1 #10 GRD
3. 100 mmC PCV SCH 40, EMPTY

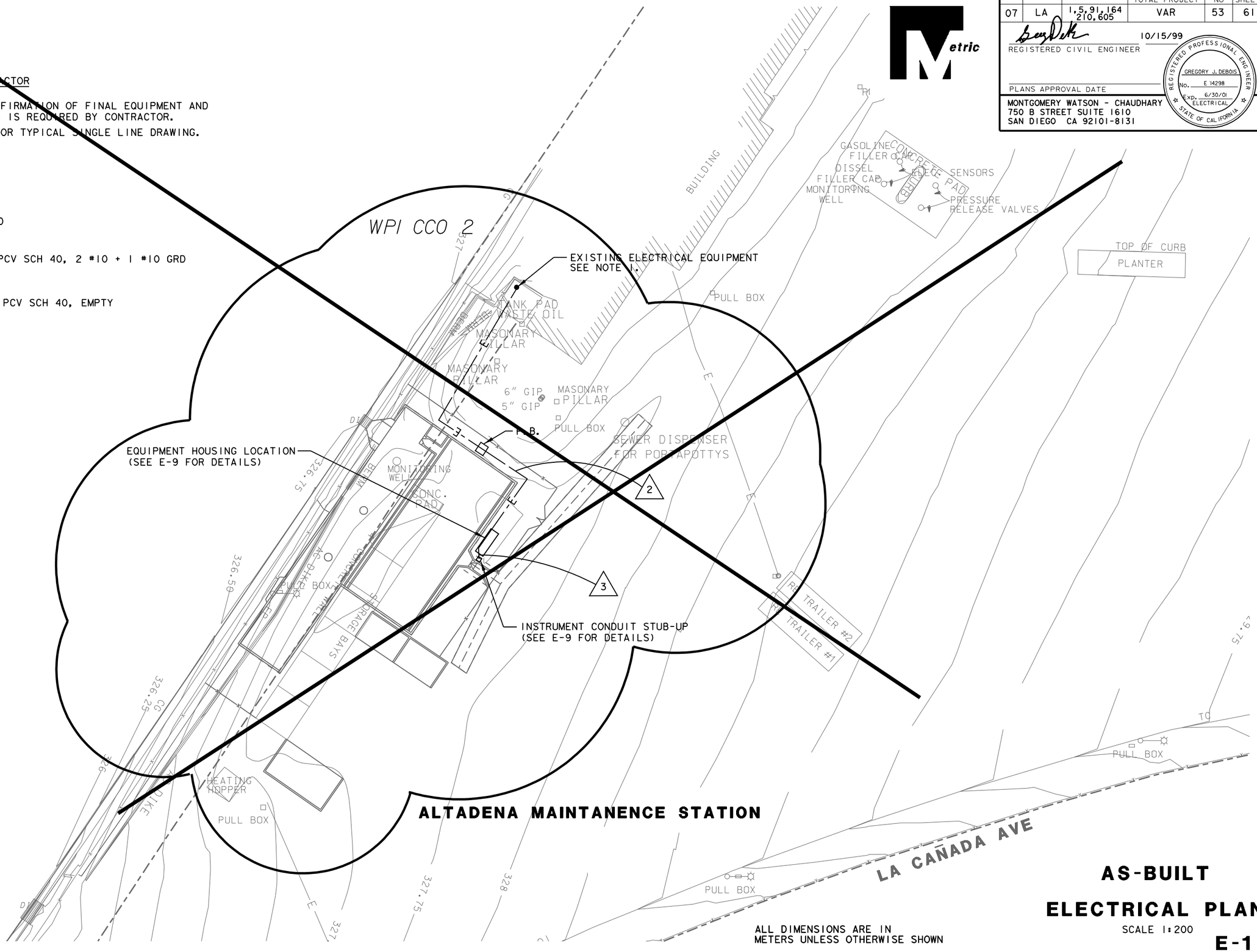

ALL DIMENSIONS ARE IN METERS UNLESS OTHERWISE SHOWN

AS-BUILT ELECTRICAL PLAN

SCALE 1:200

E-1

PROJECT ENGINEER	CALCULATED/ DESIGNED BY	CHECKED BY	DATE	REVISED BY	DATE REVISED
RONALD L. WURZ	GJD	GF	4/98	GF	10/99

LAST REVISION 00 00 00 DATE PLOTTED => 23-MAY-2000

FOR REDUCED PLANS ORIGINAL 0 20 40 60 80 USERNAME =>$$$$$$USER$$$$$$

DIST	COUNTY	ROUTE	KILOMETER POST TOTAL PROJECT	SHEET No	TOTAL SHEETS
07	LA	1,5,91,164 210,605	VAR	53	61

10/15/99
REGISTERED CIVIL ENGINEER

REGISTERED PROFESSIONAL ENGINEER — GREGORY J. DEBOIS — No. E 14298 — EXP. 6/30/01 ELECTRICAL — STATE OF CALIFORNIA

PLANS APPROVAL DATE

MONTGOMERY WATSON - CHAUDHARY
750 B STREET SUITE 1610
SAN DIEGO CA 92101-8131

Metric

NOTES TO CONTRACTOR

1. FIELD CONFIRMATION OF FINAL EQUIPMENT AND TERMINATIONS IS REQUIRED BY CONTRACTOR.
2. SEE E-9 FOR TYPICAL SINGLE LINE DRAWING.

CONDUIT NOTES:

1. NOT USED
2. 50 mmC PCV SCH 40, 2 #10 + 1 #10 GRD
3. 100 mmC PCV SCH 40, EMPTY
4. 25 mmC PCV SCH 40, 2 #10 + 1 #10 GRD

PANEL "1C"
CIRCUIT 31 "A" NEW 20A C.B.
CIRCUIT 42 NEW 40A C.B. (C-CANS)

EXISTING ELECTRICAL EQUIPMENT
SEE NOTE 1

WPI CCO 2

EQUIPMENT HOUSING LOCATION
(SEE E-9 FOR DETAILS)

INSTRUMENT CONDUIT STUB-UP
(SEE E-9 FOR DETAILS)

INSTRUMENT CONDUIT STUB-UP
(SEE E-9 FOR DETAILS)

EQUIPMENT HOUSING LOCATION
(SEE E-9 FOR DETAILS)

ALTADENA MAINTANENCE STATION

BUILDING
TANK PAD WASTE OIL
MASONARY PILLAR
MASONARY PILLAR
6" GIP
5" GIP
MASONARY PILLAR
PULL BOX
SEWER DISPENSER FOR PORTAPOTTYS
MONITORING WELL
CONC. PAD
PULL BOX
CONCRETE PAD
GASOLINE FILLER CAP
DISSEL FILLER CAP
MONITORING WELL
SENSORS
PRESSURE RELEASE VALVES
PULL BOX
TOP OF CURB
PLANTER
TRAILER #2
TRAILER #1
HEATING HOPPER
PULL BOX
PULL BOX
PULL BOX
TC
DIKE
CC
326.50
326.25
326.15
327.75
328
329.75

ALL DIMENSIONS ARE IN METERS UNLESS OTHERWISE SHOWN

AS-BUILT
ELECTRICAL PLAN

SCALE 1:200

E-1

	DATE	REVISED BY
CALCULATED/ DESIGNED BY	4/98	GF
GJD	4/98	DATE REVISED
CHECKED BY	GF	10/99

PROJECT ENGINEER
RONALD L. WURZ

LAST REVISION DATE PLOTTED => 23-MAY-2000

FOR REDUCED PLANS ORIGINAL 0 20 40 60 80 USERNAME =>$$$$$$USER$$$$$$

DIST	COUNTY	ROUTE	KILOMETER POST TOTAL PROJECT	SHEET No	TOTAL SHEETS
07	LA	1.5, 91, 164 210.605	VAR	61	61

10/15/99
REGISTERED CIVIL ENGINEER

REGISTERED PROFESSIONAL ENGINEER — GREGORY J. DEBOIS — No. E 14298 — EXP. 6/30/01 ELECTRICAL — STATE OF CALIFORNIA

PLANS APPROVAL DATE

MONTGOMERY WATSON - CHAUDHARY
750 B STREET SUITE 1610
SAN DIEGO CA 92101-8131

Metric

	CALCULATED/ DESIGNED BY	CHECKED BY	GJD	DATE 4/98	REVISED BY	DATE REVISED	GF	10/99

PROJECT ENGINEER
RONALD L. WURZ

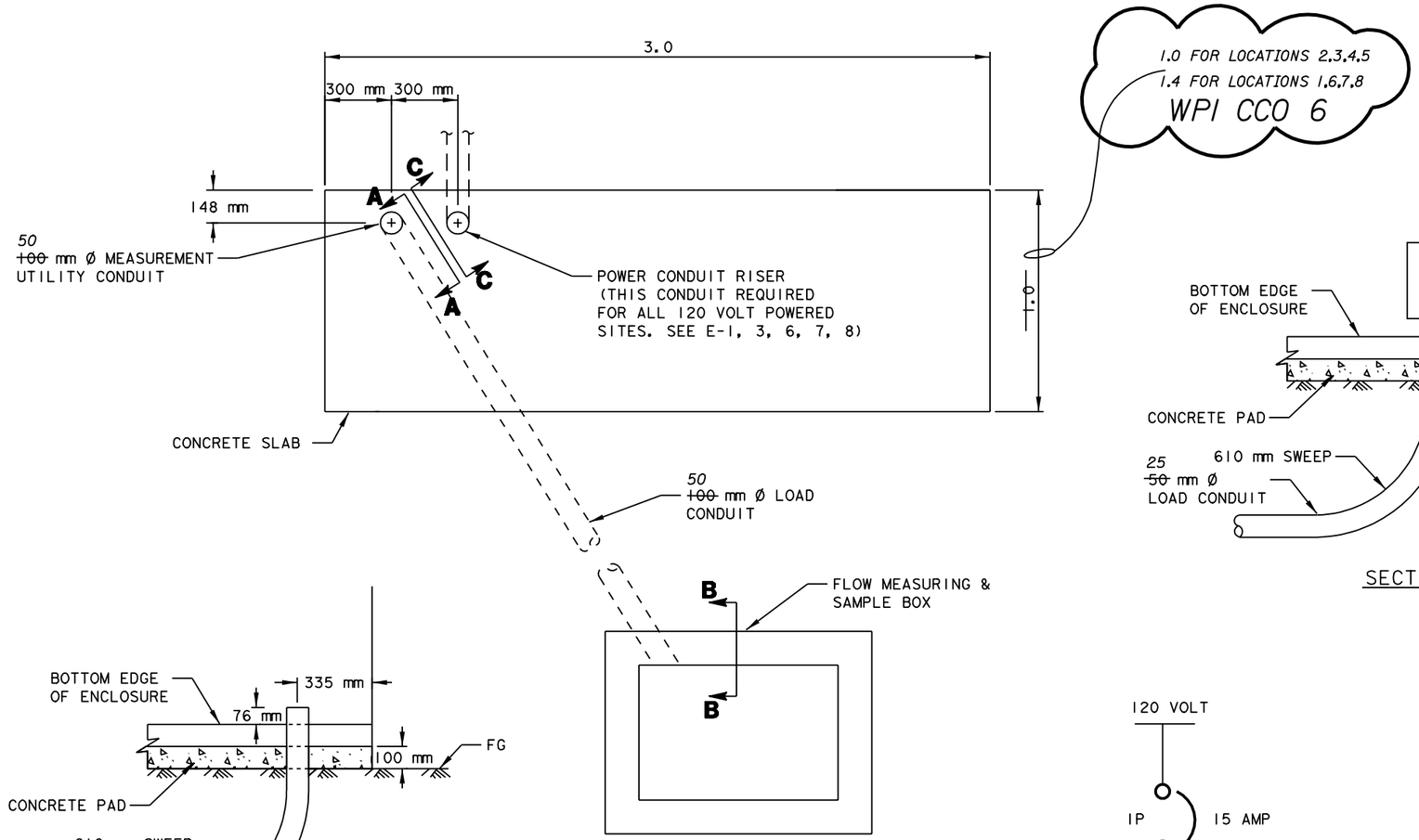

SECTION A-A

PLAN VIEW

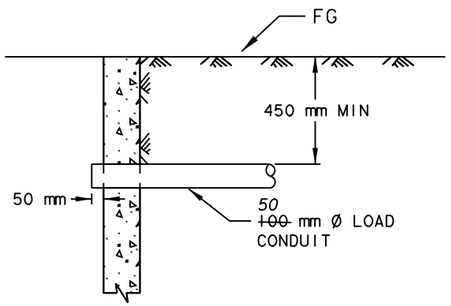

SECTION B-B

EQUIPMENT HOUSING LOCATION

1.0 FOR LOCATIONS 2.3.4.5
1.4 FOR LOCATIONS 1.6.7.8
WPI CCO 6

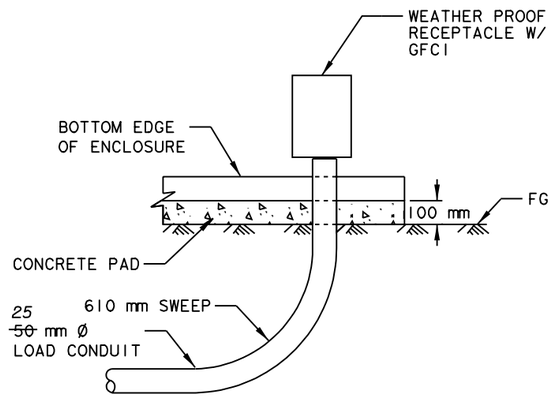

SECTION C-C

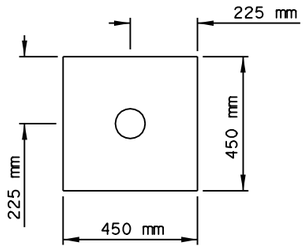

PLAN

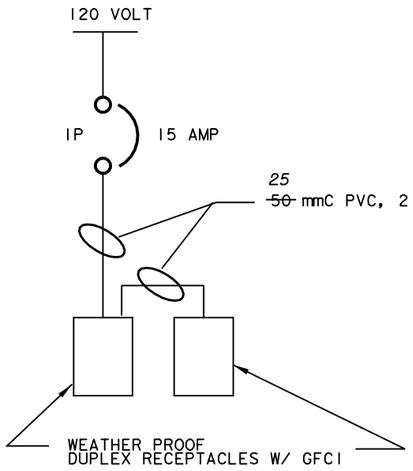

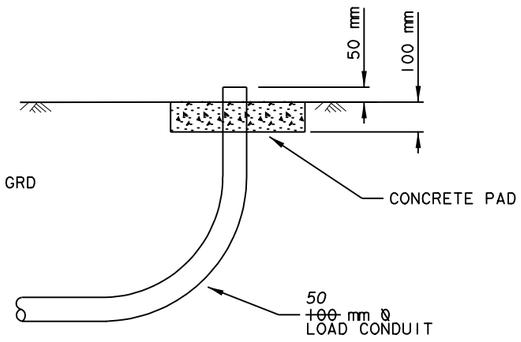

ELEVATION

INSTRUMENTATION CONDUIT STUB-UP

TYPICAL SINGLE LINE

1. CONTRACTOR TO IDENTIFY/INSTALL PANEL WITH BREAKER TO SERVICE INSTRUMENT.
2. GENERAL AREA IDENTIFIED ON ELECTRICAL SITE PLAN FOR POWER TAKE-OFF.
3. SEE SECTION C-C FOR RECEPTACLE DETAILS.

AS - BUILT
ELECTRICAL DETAILS

NO SCALE

ALL DIMENSIONS ARE IN METERS UNLESS OTHERWISE SHOWN

E-9

LAST REVISION DATE PLOTTED => 22-MAY-2000

FOR REDUCED PLANS ORIGINAL 0 20 40 60 80 USERNAME => $$$$$$USER$$$$$$