DIST	COUNTY	ROUTE	KILOMETER POST TOTAL PROJECT	SHEET No	TOTAL SHEETS
11	SD	5, 78	Var	1	60

INDEX OF SHEETS

SHEET NO	
1	TITLE AND LOCATION MAP
2-3	STANDARD PLANS LIST
4-10	CONSTRUCTION STAKING AND SURVEY
11-12	KEY MAP
13-20	DRAINAGE LAYOUTS
21-27	DRAINAGE PROFILES
28-44	DRAINAGE DETAILS
45-48	DRAINAGE QUANTITIES
49-53	TRAFFIC HANDLING
54	PAVEMENT DELINEATION PLAN
55	SUMMARY OF MISCELLANEOUS QUANTITIES
56-60	ELECTRICAL PLANS

PROJECT PLANS FOR CONSTRUCTION ON
STATE HIGHWAY
IN SAN DIEGO COUNTY
AT VARIOUS LOCATIONS

To be supplemented by Standard Plans dated July, 1997

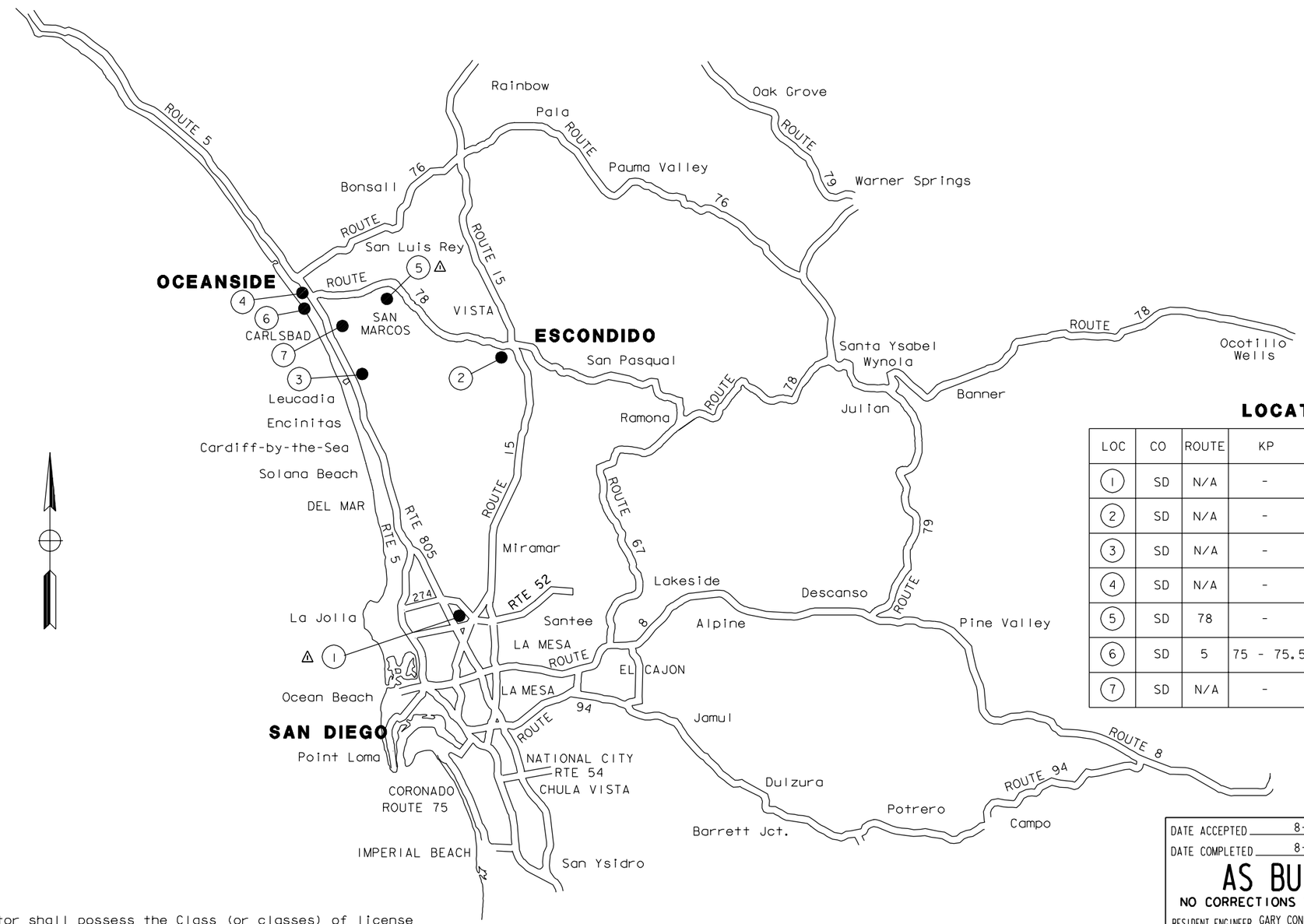

LOCATION OF CONSTRUCTION

LOC	CO	ROUTE	KP	PM	DESCRIPTION
1	SD	N/A	-	-	KEARNY MESA MAINTENANCE STATION
2	SD	N/A	-	-	ESCONDIDO MAINTENANCE STATION
3	SD	N/A	-	-	LA COSTA AVENUE PARK AND RIDE
4	SD	N/A	-	-	SR-78 / I-5 PARK AND RIDE
5	SD	78	-	-	SR-78 WEST OF MELROSE DRIVE INTERCHANGE
6	SD	5	75 - 75.5	46 - 46.9	I-5 NORTH OF PALOMAR AIRPORT ROAD INTERCHANGE
7	SD	N/A	-	-	CARLSBAD MAINTENANCE STATION

Metric

DATE ACCEPTED 8-20-99
DATE COMPLETED 8-20-99
AS BUILT
NO CORRECTIONS THIS SHEET
RESIDENT ENGINEER GARY CONKLIN-RBF & ASSOC

Project Engineer Date
Registered Civil Engineer

REGISTERED PROFESSIONAL ENGINEER
ERWIN FOGERSON
No. 49060
Exp. 9-30-99
CIVIL
STATE OF CALIFORNIA

Plans Approval Date

The Contractor shall possess the Class (or classes) of license as specified in the ''Notice to Contractors''.

PROJECT ENGINEER | DATE | PROJECT MANAGER | DATE

Contract No. 430004A

LAST REVISION 00-00-00

TIME PLOTTED => $$$$$$$SYTIME$$$$$$$

DIST.	COUNTY	ROUTE	KILOMETER POST TOTAL PROJECT	SHEET NO.	TOTAL SHEETS
11	SD	var	var	2	60

Metric

To accompany plans dated _____

GENERAL ROAD WORK

MISCELLANEOUS

- ■ A10A Abbreviations
- ■ A10B Symbols
- □ A20A Pavement Markers and Traffic Lines, Typical Details
- □ A20B Pavement Markers and Traffic Lines, Typical Details
- □ A20C Pavement Markers and Traffic Lines, Typical Details
- □ A20D Pavement Markers and Traffic Lines, Typical Details
- □ A24A Pavement Markings- Arrows
- □ A24B Pavement Markings- Arrows
- □ A24C Pavement Markings- Symbols and Numerals
- □ A24D Pavement Markings- Words
- □ A24E Pavement Markings- Words and Crosswalks
- □ A35A Portland Cement Concrete Paving Details
- □ A40 Rumble Strip Details
- ■ A62A Excavation and Backfill- Miscellaneous Details
- □ A62B Limits of Payment for Excavation and Backfill Bridge- Surcharge and Wall
- □ A62C Limits of Payment for Excavation and Backfill- Bridge
- □ A62D Excavation and Backfill- Concrete Pipe Culverts
- □ A62E Excavation and Backfill- Cast-in-Place Reinforced Concrete Box and Arch Culverts
- ■ A62F Excavation and Backfill- Metal and Plastic Culverts
- □ A73A Object Markers
- □ A73B Markers
- □ A73C Delineators, Channelizers and Barricades
- □ A74 Survey Monuments
- □ A75A Concrete Barrier Type 50
- □ A75B Concrete Barrier Type 50E
- □ A75D Concrete Headlight Glare Screen
- □ RSP A76A CONCRETE BARRIER TYPE 60
- □ A76B Concrete Barrier Type 60
- □ A76C Concrete Barrier Type 60E
- □ A76D Concrete Barrier Type 60G
- □ A76E Concrete Barrier Type 60G
- □ A76F Concrete Barrier Type 60GE
- □ RSP A76G CONCRETE BARRIER TYPE 60S
- □ A76H Concrete Barrier Type 60S
- □ A76I Concrete Barrier Type 60SE
- □ A77A Metal Beam Guard Railing
- □ A77B Metal Beam Guard Railing- Standard Hardware
- □ RSP A77C METAL BEAM GUARD RAILING - POST AND BLOCKS
- □ A77D Guard Railing Flares
- □ A77E Guard Railing Flares
- □ A77F Metal Beam Guard Railing- Miscellaneous Details
- □ A77G Guard Railing End Anchors (Breakaway)
- □ A77GA Anchor Assembly (Breakaway, Type M)-Hardware and Post Details
- □ A77H Guard Railing End Anchors- Breakaway Hardware
- □ A77I Barrier and Guard Railing End Anchors
- □ A77J Guard Railing Connections to Bridge Railings, Retaining Walls and Abutments
- □ A77K Guard Railing Connections to Bridge Sidewalks and Curbs
- □ A78A Thrie Beam Barrier
- □ A78B Thrie Beam Barrier
- □ A78C Thrie Beam Barrier- Standard Hardware
- □ A78D Thrie Beam Barrier- Miscellaneous Details
- □ A78E Thrie Beam Barrier- End Anchors
- □ A78F Thrie Beam Barrier Connections to Bridge Railing
- □ A78G Thrie Beam Barrier Connections to Bridge Curbs, Retaining Walls and Abutments
- □ A78H Thrie Beam Barrier Connections to Concrete Barrier Type 50
- □ A78I Thrie Beam Barrier Connections to Concrete Barrier Type 60
- □ A81 Crash Cushion, Sand Filled
- □ A83 Portable Scale Pad and Approach Slab Details
- ■ A85 Chain Link Fence
- □ A86 Barbed Wire and Wire Mesh Fences
- ■ A87 Curbs, Dikes and Driveways
- □ A88 Curb Ramp Details
- □ A90 Accessible Parking

CRIB WALLS

- □ C7A Reinforced Concrete Crib Wall- Battered Wall- Types A,B and C
- □ C7B Reinforced Concrete Crib Wall- Battered Wall- Types D,E and F
- □ C7C Reinforced Concrete Crib Wall- Vertical Wall- Types A,B and C
- □ C7D Reinforced Concrete Crib Wall- Vertical Wall- Types D,E and F
- □ RSP C7E REINFORCED CONCRETE CRIB WALL- TYPES A,B,C,D,E AND F-HEADER AND STRECHER DETAILS
- □ RSP C7F DESIGN DATA FOR REINFORCED CONCRETE CRIB WALL FOUNDATION PRESSURE- BATTERED WALL
- □ RSP C7G REINFORCED CONCRETE CRIB WALL FOUNDATION PRESSURE- VERTICAL WALL
- □ C8A Steel Crib Wall- Construction Details
- □ C8B Steel Crib Wall- Design Data
- □ RSP C8C STEEL CRIB WALL- DESIGN DATA
- □ C9A Timber Crib Wall- Types A,B,C and D
- □ RSP C9B TIMBER CRIB WALL- TYPES A,B,C AND D-DESIGN DATA

DRAINAGE

- □ D72 Drainage Inlets
- ■ D73 Drainage Inlets
- ■ D74A Drainage Inlets
- ■ D74B Drainage Inlets
- ■ D74C Drainage Inlet Details
- D75 IS DELETED AND REPLACED WITH NSP D75A, NSP D75B AND NSP D75C)
- ■ RSP D77A Grate Details
- □ D77B Bicycle Proof Grate Details
- ■ D77C Alternative Hinged Cover for Type OL and OS Inlets and Trash Rack for Type OCP Inlet
- ■ D78 Gutter Depressions
- □ D79 Precast Reinforced Concrete Pipe- Direct Design Method
- □ D80 Cast-in-Place Reinforced Concrete Single Box Culvert
- □ D81 Cast-in-Place Reinforced Concrete Double Box Culvert
- □ D82 Cast-in-Place Reinforced Concrete Box Culvert Miscellaneous Details
- □ D84 Box Culvert Wingwalls- Types A,B and C
- □ RSP D85 BOX CULVERT WINGWALLS- TYPES D AND E
- □ D86A Box Culvert Warped Wingwalls
- □ D86B Pipe Culvert Headwalls, Endwalls and Warped Wingwalls
- □ D86C Arch Culvert Headwalls, Endwalls and Warped Wingwalls
- ■ D87A Overside Drains
- □ D87B Overside Drains
- □ D87C Underdrains
- ■ D88 Construction Loads on Culverts
- □ D88A Strut Details for Structural Steel Plate Pipes, Arches, and Vehicular Undercrossings
- □ D89 Pipe Headwalls
- □ D90 Pipe Culvert Headwalls, Endwalls and Wingwalls-Types A,B and C
- □ D93A Pipe Riser Connections
- □ D93B Drainage Inlet Riser Connections
- □ D93C Pipe Riser with Debris Rack Cage
- ■ D94A Metal and Plastic Flared End Sections
- □ D94B Concrete Flared End Sections
- □ D95 Concrete Arch Culverts
- ■ D97A Corrugated Metal Pipe Coupling Details No. 1- Annular Coupling Band Bar and Strap and Angle Connectors
- ■ D97B Corrugated Metal Pipe Coupling Details No. 2- Hat Band Coupler and Flange Details
- □ D97C Corrugated Metal Pipe Coupling Details No. 3- Helical and Universal Couplers
- ■ D97D Corrugated Metal Pipe Coupling Details No. 4- Hugger Coupling Bands
- ■ D97E Corrugated Metal Pipe Coupling Details No. 5- Standard Joint
- ■ D97F Corrugated Metal Pipe Coupling Details No. 6- Positive Joint
- ■ D97G Corrugated Metal Pipe Coupling Details No. 7- Positive Joints and Downdrains
- ■ D97H Reinforced Concrete Pipe or Non-Reinforced Concrete Pipe Standard and Positive Joints
- □ D98A Slotted Corrugated Steel Pipe Drain Details
- □ D98B Slotted Corrugated Steel Pipe Drain Details
- □ D99A Structural Section Drainage System Details
- □ D99B Edge Drain Outlet and Vent Details
- □ D99C Edge Drain Cleanout and Vent Details
- □ D99D Cross Drain Interceptor Details

HIGHWAY PLANTING

- □ H1 Planting and Irrigation- Abbreviations
- □ RSP H2 PLANTING AND IRRIGATION- SYMBOLS
- □ H3 Planting and Irrigation- Details
- □ H4 Planting and Irrigation- Details
- □ H5 Planting and Irrigation- Details
- □ H6 Planting and Irrigation- Details
- □ H7 Planting and Irrigation- Details
- □ H8 Planting and Irrigation- Details

TEMPORARY FACILITIES

- ■ T1 Temporary Crash Cushion, Sand Filled
- ■ T2 Temporary Crash Cushion, Sand Filled
- ■ T3 Temporary Railing (Type K)
- □ T4 Temporary Traffic Screen
- □ T5 Temporary Terminal Section (Type K)
- □ T7 Construction Project Funding Identification Signs
- □ T10 Traffic Control System for Lane Closure on Freeways and Expressways
- □ T10A Traffic Control System for Lane and Complete Closures on Freeways and Expressways
- □ T11 Traffic Control System for Lane Closure on Multilane Conventional Highways
- □ T12 Traffic Control System for Lane Closure on Multilane Conventional Highways
- □ T13 Traffic Control System for Lane Closure on Two Lane Conventional Highways
- □ T14 Traffic Control System for Ramp Closures
- □ T15 Traffic Control System for Moving Lane Closure on Multilane Highways
- □ T16 Traffic Control System for Moving Lane Closure on Multilane Highways
- □ T17 Traffic Control System for Moving Lane Closure on Two Lane Highways

BRIDGE

- □ B0-1 Bridge Details
- □ B0-3 Bridge Details
- □ B0-5 Bridge Details
- □ B0-13 Bridge Details
- □ B2-3 400 mm Cast-in-Drilled-Hole Concrete Pile
- □ B2-5 Pile Details- Class 400 and Class 625
- □ B2-6 Pile Details- Class 400C and Class 625C
- □ B2-8 Pile Details- Class 900 and Class 900C
- □ B2-9 Load Test Pile Details (1)
- □ B2-10 Load Test Pile Details (2)
- □ B2-11 Load Test Pile Details (3)
- ■ RSP B3-1 RETAINING WALL TYPE 1- H=1200 THROUGH 9100 mm
- □ B3-2 Retaining Wall Type 1- H=9700 Through 10 900 mm
- □ RSP B3-3 RETAINING WALL- TYPE 1A
- □ B3-4 Retaining Wall- Type 2
- □ B3-5 Counterfort Retaining Wall- Type 3
- □ B3-6 Counterfort Retaining Wall- Type 4
- □ RSP B3-7 RETAINING WALL- TYPE 5
- □ RSP B3-8 RETAINING WALL DETAILS No. 1
- □ B3-9 Retaining Wall Details No. 2
- □ B3-11 Retaining Wall Type 6- 1829 mm Maximum
- □ B6-1 T-Beam Details
- □ B6-10 Utility Openings, T-Beam
- □ B6-21 Joint Seals (Maximum Movement Rating = 50 mm)
- □ B7-1 Box Girder Details
- □ B7-5 Deck Drains
- □ B7-6 Deck Drains- Type D-1 and D-2
- □ B7-10 Utility Opening- Box Girder
- □ B7-11 Utility Details
- □ B8-5 Cast-in-Place Prestressed Girder Details
- □ B11-7 Chain Link Railing
- □ B11-47 Cable Railing
- □ B11-51 Tubular Hand Railing
- □ B11-52 Chain Link Railing Type 7
- □ B11-53 Concrete Barrier Type 25
- □ B11-54 Concrete Barrier Type 26

DATE ACCEPTED 8-20-99
DATE COMPLETED 8-20-99

AS BUILT

NO CORRECTIONS THIS SHEET

RESIDENT ENGINEER GARY CONKLIN-RBF & ASSOC

SHEET 1 OF 2

STANDARD PLANS LIST

(JULY, 1997 EDITION)

REVISED DECEMBER 4, 1997

The Standard Plan sheets applicable to this contract include, but are not limited to those indicated by a marked box.
The Revised Standard Plans (RSP) and New Standard Plans (NSP) which apply to this contract are included as individual sheets of the project plans.

USERNAME => $USER
DGN FILE => $REQUEST

CONTRACT NO. 430004A

07 JUN 2000 5:32:15 q:\57704\34358\dgn\asbuilts\asbuilts without rev shown\sp101.div

DATE PLOTTED => $DATE
TIME PLOTTED => $TIME

DIST.	COUNTY	ROUTE	KILOMETER POST TOTAL PROJECT	SHEET NO.	TOTAL SHEETS
11	SD	var	var	3	60

Metric

To accompany plans dated _____

- ☐ B13-1 Slope Protection Details
- ☐ B14-1 Structural Steel Plate Vehicular Undercrossing
- ☐ B14-3 Communication and Sprinkler Control Conduit (Conduit less than size 103)
- ☐ B14-4 Water Supply Line (Bridge) (Pipe less than NPS 4)
- ☐ B14-5 Water Supply Line (Details) (Pipe less than NPS 4)

ROADSIDE SIGNS

- ☐ RS1 Roadside Signs, Typical Installation Details No. 1
- ☐ RS2 Roadside Signs, Wood Post, Typical Installation Details No. 2
- ☐ RS3 Roadside Signs, Laminated Wood Box Post, Typical Installation Details No. 3
- ☐ RS4 Roadside Signs, Typical Installation Details No. 4

OVERHEAD SIGNS

OVERHEAD SIGNS-TRUSS

- ☐ S1 Overhead Signs- Truss, Instructions and Examples
- ☐ S2 Overhead Signs- Truss, Single Post Type, Post Types II thru VII
- ☐ S3 Overhead Signs- Truss, Two Post Type, Post Types I-S thru VII-S
- ☐ RSP S4 OVERHEAD SIGNS- TRUSS, SINGLE POST TYPE, STRUCTURAL FRAME MEMBERS
- ☐ S5 Overhead Signs- Truss, Two Post Type, Structural Frame Members
- ☐ S6 Overhead Signs- Truss, Structural Frame Details
- ☐ S7 Overhead Signs- Truss, Frame Juncture Details
- ☐ S8A Overhead Signs- Steel Frame Removable Sign Panel Frames
- ☐ S8B Overhead Signs- Removable Sign Panel Frames, Overhead Formed Panel Mounting Details
- ☐ S8C Overhead Signs- Truss, Sign Panel Mounting Details, Laminated Panel- Type A
- ☐ S8D Overhead Signs- Truss, Removable Sign Panel Frames 2.794 m and 3.048 m Sign Panels
- ☐ S9 Overhead Signs- Walkway Details No. 1
- ☐ S10 Overhead Signs- Walkway Details No. 2
- ☐ S11 Overhead Signs- Walkway Safety Railing Details
- ☐ S13 Overhead Signs- Truss Pile Foundation

OVERHEAD SIGNS-LIGHTWEIGHT

- ☐ S14A Overhead Signs- Lightweight Balanced-Single Steel Post Connection and Mounting Details
- ☐ S14B Overhead Signs- Lightweight Balanced-Single Steel Post Details
- ☐ S15 Overhead Signs- Lightweight, Type A, Connection Details
- ☐ S16 Overhead Signs- Lightweight, Type B, Connection Details
- ☐ S17 Overhead Signs- Lightweight, Type C, Connection Details
- ☐ S18A Overhead Signs- Lightweight, Sign Panel Mounting Details, Laminated Panel- Type A
- ☐ S18B Overhead Signs- Lightweight, Light Fixture Mounting Details
- ☐ S20A Overhead Signs- Lightweight Post Details
- ☐ S20B Overhead Signs- Lightweight Foundation Details

OVERHEAD SIGNS-BOX BEAM CLOSED TRUSS ALTERNATIVE

- ☐ S39 Overhead Signs- Box Beam Closed Truss, Foundation Details
- ☐ S40A Overhead Signs- Box Beam Closed Truss, Two Post Type Frame Members
- ☐ S40B Overhead Signs- Box Beam Closed Truss, Single and Two Post Type, General Frame Details
- ☐ S40C Overhead Signs- Box Beam Closed Truss, Ribbed Sheet Metal Details
- ☐ S40D Overhead Signs- Box Beam Closed Truss, Two Post Type, Frame Details
- ☐ S40E Overhead Signs- Box Beam Closed Truss, Two Post Type, Frame Juncture Details
- ☐ S40F Overhead Signs- Box Beam Closed Truss, Two Post Type, Post Details
- ☐ S40G Overhead Signs- Box Beam Closed Truss, Single Post Type, Frame Members
- ☐ S40H Overhead Signs- Box Beam Closed Truss, Single Post Cantilever, Frame Details
- ☐ S40I Overhead Signs- Box Beam Closed Truss, Single Post Cantilever, Frame Juncture Details
- ☐ S40J Overhead Signs- Box Beam Closed Truss, Single Post Cantilever, Post Details
- ☐ S40K Overhead Signs- Box Beam Closed Truss, Single Post Butterfly, Frame Details
- ☐ S40L Overhead Signs- Box Beam Closed Truss, Single Post Butterfly, Frame Juncture Details
- ☐ S40M Overhead Signs- Box Beam Closed Truss, Single Post Butterfly, Post Details

OVERHEAD SIGNS-TUBULAR

- ☐ S40N Overhead Signs- Tubular, Instructions and Examples
- ☐ S40P Overhead Signs- Tubular, Single Post Type, Layout and Pipe Selection
- ☐ S40Q Overhead Signs- Tubular, Two Post Type, Layout and Pipe Selection
- ☐ S40R Overhead Signs- Tubular, Structural Frame Details No. 1
- ☐ S40S Overhead Signs- Tubular, Structural Frame Details No. 2
- ☐ S40T Overhead Signs- Tubular, Foundation Details

SIGNALS, LIGHTING AND ELECTRICAL SYSTEMS

- ■ ES-1A Signal, Lighting and Electrical Systems- Symbols and Abbreviations
- ■ ES-1B Signal, Lighting and Electrical Systems- Symbols and Abbreviations
- ☐ ES-2A Signal, Lighting and Electrical Systems- Service Equipment
- ☐ ES-2B Signal, Lighting and Electrical Systems- Service Equipment
- ☐ ES-2C Signal, Lighting and Electrical Systems- Service Equipment Notes
- ☐ ES-2D Signal, Lighting and Electrical Systems- Service Equipment and Typical Wiring Diagram, Type A
- ☐ ES-2E Signal, Lighting and Electrical Systems- Service Equipment and Typical Wiring Diagram, Type B
- ☐ ES-2F Signal, Lighting and Electrical Systems- Service Equipment and Typical Wiring Diagram, Type C
- ☐ ES-3A Signal, Lighting and Electrical Systems- Signal Heads and Mountings
- ☐ ES-3B Signal, Lighting and Electrical Systems- Signal Heads and Mountings
- ☐ ES-3C Signal, Lighting and Electrical Systems- Signal Heads and Mountings
- ☐ ES-3D Signal, Lighting and Electrical Systems- Signal Heads and Mountings
- ☐ ES-3E Signal, Lighting and Electrical Systems- Signal Heads and Mountings
- ☐ ES-4A Signal, Lighting and Electrical Systems- Controller Cabinet Details
- ☐ ES-4B Signal, Lighting and Electrical Systems- Controller Cabinet Details
- ☐ ES-4C Signal, Lighting and Electrical Systems- Controller Cabinet Details
- ☐ ES-4D Irrigation Controller Enclosure Cabinet
- ☐ ES-5A Signal, Lighting and Electrical Systems- Detectors
- ☐ ES-5B Signal, Lighting and Electrical Systems- Detectors
- ☐ ES-5C Signal, Lighting and Electrical Systems- Detectors
- ☐ ES-5D Signal, Lighting and Electrical Systems- Detectors
- ☐ ES-5E Signal, Lighting and Electrical Systems- Detectors
- ☐ ES-5F Signal, Lighting and Electrical Systems- Pedestrian Barricades
- ☐ ES-6A Signal and Lighting Standards- Type 1 Standards and Equipment Numbering
- ☐ ES-6AA Signal Standards- Push Button Posts
- ☐ ES-6B Lighting Standards- Types 15, 21 and 22
- ☐ ES-6C Lighting Standards- 24.4 m to 48.8 m High Mast Light Pole, Foundation Details
- ☐ ES-6D Lighting Standards- Types 30 and 31
- ☐ ES-6DA Lighting Standards- Type 32
- ☐ ES-6E Lighting Standards- Types 30 and 31, Base Details
- ☐ ES-6F Lighting Standards- 10 Degree Type
- ☐ ES-6H Lighting Standards- 10 Degree Type, Details
- ☐ RSP ES-6J SIGNAL AND LIGHTING STANDARDS- CASE 1 ARM LOADING, WIND VELOCITY = 113 km/h, ARM LENGTHS 4.6 m TO 9.1 m
- ☐ ES-6K Signal and Lighting Standards- Case 2 Arm Loading, Wind Velocity = 113 km/h, Arm Lengths 6.1 m to 9.1 m
- ☐ ES-6L Signal and Lighting Standards- Case 3 Arm Loading, Wind Velocity = 113 km/h, Arm Lengths 4.6 m to 13.7 m
- ☐ ES-6M Signal and Lighting Standards- Case 4 Arm Loading, Wind Velocity = 113 km/h, Arm Lengths 7.6 m to 13.7 m
- ☐ ES-6MA Signal and Lighting Standards- Case 5 Arm Loading, Wind Velocity = 113 km/h, Arm Lengths 15.2 m to 16.8 m
- ☐ ES-6N Signal and Lighting Standards- Type 40-0-129
- ☐ ES-6O Signal and Lighting Standards- Case 1 Arm Loading, Wind Velocity = 129 km/h, Arm Lengths 7.6 m to 9.1 m
- ☐ ES-6P Signal and Lighting Standards- Case 2 Arm Loading, Wind Velocity = 129 km/h, Arm Lengths 6.1 m to 9.1 m
- ☐ ES-6Q Signal and Lighting Standards- Case 3 Arm Loading, Wind Velocity = 129 km/h, Arm Lengths 6.1 m to 13.7 m
- ☐ RSP ES-6R SIGNAL AND LIGHTING STANDARDS- CASE 4 ARM LOADING, WIND VELOCITY = 129 km/h, ARM LENGTHS 7.6 m TO 13.7 m
- ☐ ES-6RA Signal and Lighting Standards- Case 5 Arm Loading, Wind Velocity = 129 km/h, Arm Lengths 15.2 m to 16.8 m
- ☐ ES-6RB Signal and Lighting Standards- Case 5 Arm Loading, Wind Velocity = 129 km/h, Arm Lengths 18.2 m to 19.8 m
- ☐ ES-6S Signal and Lighting Standards- Details No. 1
- ☐ ES-6T Signal and Lighting Standards- Details No. 2
- ☐ ES-6TA Signal and Lighting Standards- Pole and Mast Arm Alternatives
- ☐ ES-6U Lighting Standards- Type 15 Slip Base Insert
- ☐ ES-6V Signal and Sign Standards- Type 33 Left Turn
- ☐ ES-7A Signal, Lighting and Electrical Systems- Electrical Details, Structure Installations
- ☐ ES-7B Signal, Lighting and Electrical Systems- Electrical Details, Structure Installations
- ☐ ES-7C Signal, Lighting and Electrical Systems- Electrical Details, Structure Installations
- ☐ ES-7D Signal, Lighting and Electrical Systems- Electrical Details, Structure Installations
- ☐ ES-7E Signal, Lighting and Electrical Systems- Electrical Details, Structure Installations
- ☐ ES-7F Signal, Lighting and Electrical Systems- Flush Soffit Luminaire Modification Details, Structure Installations
- ■ ES-8 Signal, Lighting and Electrical Systems- Pull Box Details
- ☐ ES-9A Signal, Lighting and Electrical Systems- Cantilever Flashing Beacon, Types 9, 9A and 9B
- ☐ ES-9B Signal, Lighting and Electrical Systems- Cantilever Flashing Beacon, Types 9, 9A and 9B
- ☐ ES-10 Signal, Lighting and Electrical Systems- Isolux Diagrams
- ☐ ES-11 Signal, Lighting and Electrical Systems- Foundation Installations
- ☐ ES-12 Signal, Lighting and Electrical Systems- Pedestrian Undercrossing Fluorescent Lighting Fixture
- ■ ES-13 Signal, Lighting and Electrical Systems- Splicing Details
- ☐ ES-14 Signal, Lighting and Electrical Systems- Wiring Details and Fuse Ratings
- ☐ ES-15 Signal, Lighting and Electrical Systems- Pedestrian Overcrossing Fluorescent Lighting Fixture
- ☐ ES-27A Signal, Lighting and Electrical Systems- Extinguishable Message Sign, 250 mm Letters
- ☐ ES-27B Signal, Lighting and Electrical Systems- Extinguishable Message Sign, 250 mm Letters
- ☐ ES-28 Signal, Lighting and Electrical Systems- Extinguishable Message Sign and Flashing Beacons

SIGN ILLUMINATION

- ☐ ES-29 Sign Illumination- Mercury Sign Illumination Equipment
- ☐ ES-30 Sign Illumination- 915 mm Fluorescent Sign Illumination Equipment
- ☐ ES-32A Sign Illumination- Sign Illumination Equipment
- ☐ ES-32B Sign Illumination- Sign Illumination Control
- ☐ ES-33 Sign Illumination- Internally Illuminated Street Name Sign

CLOSED CIRCUIT TELEVISION

- ☐ RSP ES-34A CLOSED CIRCUIT TELEVISION- POLE DETAILS
- ☐ ES-34B Closed Circuit Television- Pole Details- Overhead Sign Mounted

NEW STANDARD PLANS

- ■ NSP D75A PIPE INLETS
- ■ NSP D75B PIPE INLETS
- ■ NSP D75C PIPE INLETS- LADDER, STEP AND TRASH RACK DETAILS

DATE ACCEPTED 8-20-99
DATE COMPLETED 8-20-99
AS BUILT
NO CORRECTIONS THIS SHEET
RESIDENT ENGINEER GARY CONKLIN-RBF & ASSOC

SHEET 2 OF 2

STANDARD PLANS LIST

(JULY, 1997 EDITION)

REVISED DECEMBER 4, 1997

DATE PLOTTED => $DATE
TIME PLOTTED => $TIME

07 JUN 2000 5:32:34 q:\57704\34358\dgn\asbuilts\asbuilts without rev shown\sp102.dlv

The Standard Plan sheets applicable to this contract include, but are not limited to those indicated by a marked box.
The Revised Standard Plans (RSP) and New Standard Plans (NSP) which apply to this contract are included as individual sheets of the project plans.

USERNAME => $USER
DGN FILE => $REQUEST

CONTRACT NO. 430004A

DIST	COUNTY	ROUTE	KILOMETER POST TOTAL PROJECT	SHEET No	TOTAL SHEETS
11	SD	78/15	26.6	6	60

REGISTERED CIVIL ENGINEER

PLANS APPROVAL DATE

REGISTERED PROFESSIONAL ENGINEER
ERWIN FOGERSON
NO. 049060
EXP. 9-30-99
CIVIL
STATE OF CALIFORNIA

AGUILAR ENGINEERING INCORPORATED
937 SOUTH VIA LATA, SUITE 500
COLTON, CA 92324

BASIS OF BEARING AND COORDINATES

BEARINGS AND COORDINATES AS SHOWN HEREON ARE IN TERMS OF THE CALIFORNIA COORDINATE SYSTEM OF 1983 (EPOCH 1995.50). ZONE 6, BASED LOCALLY UPON THE FOLLOWING CONTINUOUSLY OPERATING REFERENCE STATIONS AS PUBLISHED BY THE NATIONAL GEODETIC SURVEY.

STATION	NORTHING(Y)	EASTING(X)
MONP	580,447.284	1,983,875.610
SIO3	577,862.544	1,906,370.297
TRAK	662,024.000	1,855,858.672

BENCHMARK

ELEVATIONS AS SHOWN HEREON ARE IN TERMS OF THE NORTH AMERICAN VERTICAL DATUM OF 1998 BASED LOCALLY UPON THE FOLLOWING CALIFORNIA DEPARTMENT OF TRANSPORTATION BENCHMARK.

BM 5-44.11 14.361 (NAVD88-GPS 2ND ORDER)

2" BRASS DISC STAMPED "CAL DEPT. TRANS." BM 5-44.11 1997", LOCATED AT THE NORTHEAST BRIDGE RETURN AT I-5 & LA COSTA AVE.

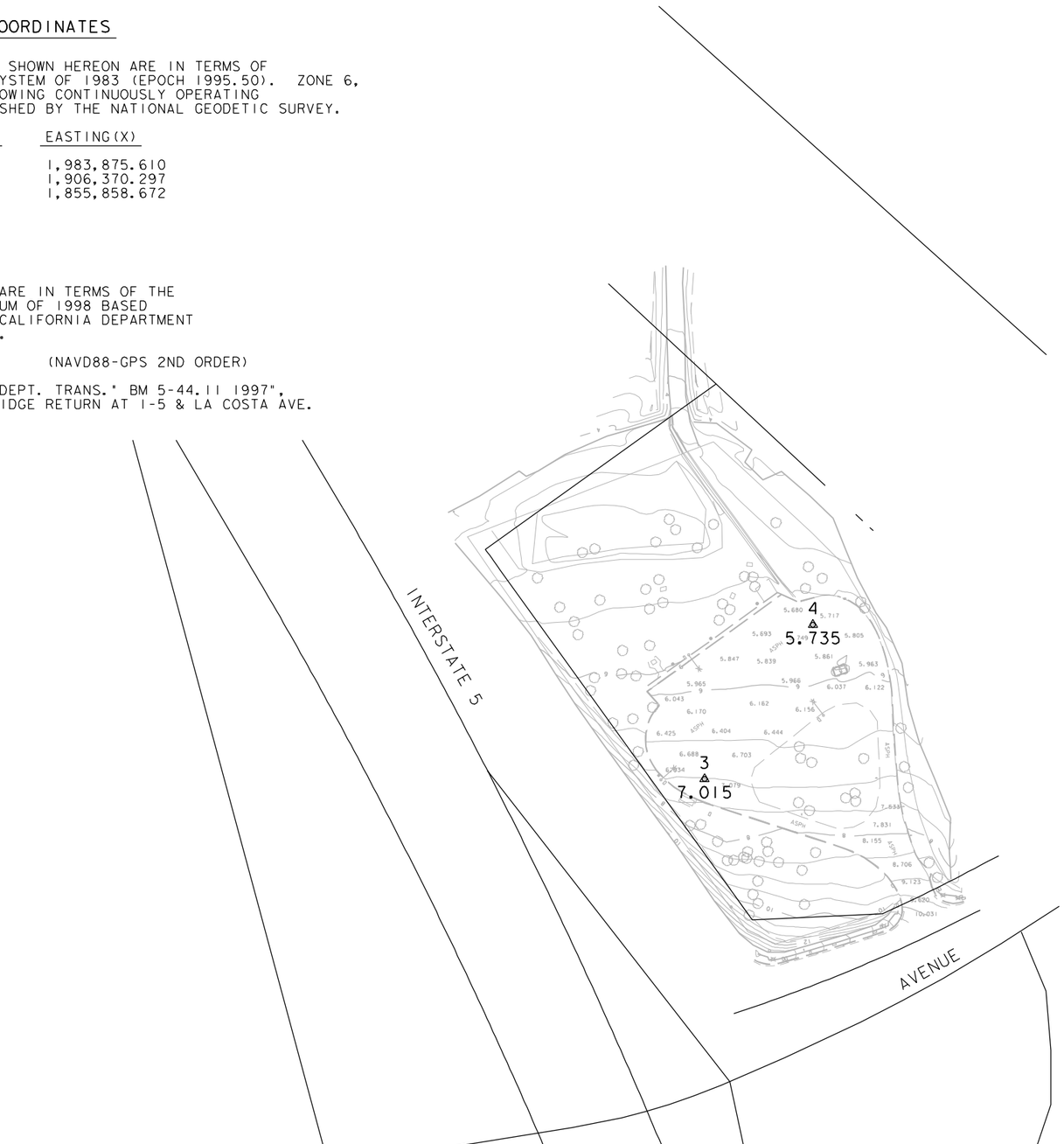

PROJECT CONTROL

STA NAME	NORTHING(Y) METERS	EASTING(X) METERS	EPOCH DATE	ELEVATION METERS	DESCRIPTION
3	602,353.380	1,902,185.032	1995.50	7.015	CONCRETE NAIL/TIN WEST END OF PARK AND RIDE
4	602,412.532	1,902,226.684	1995.50	5.735	CONCRETE NAIL/TIN WEST END OF PARK AND RIDE

DATE ACCEPTED 8-20-99
DATE COMPLETED 8-20-99

AS BUILT
NO CORRECTIONS THIS SHEET
RESIDENT ENGINEER GARY CONKLIN-RBF & ASSOC

CONSTRUCTION STAKING SURVEY CONTROL DATA LOCATION 3

SCALE: 1:1000

CSS-3

DATE	REVISED BY	DATE REVISED

CALCULATED/DESIGNED BY
CHECKED BY
PROJECT ENGINEER

07 JUN 2000 4:47:48 q:\57704\34358\dgn\asbuilts\asbuilts without rev shown\css03.dlv

LAST REVISION 00-00-00
DATE PLOTTED => $DATE
TIME PLOTTED => $TIME

FOR REDUCED PLANS ORIGINAL SCALE IS IN MILLIMETERS 0 20 40 60 80

USERNAME => $USER
DGN FILE => $REQUEST

CU 00000

CONTRACT NO 430004A

DIST	COUNTY	ROUTE	KILOMETER POST TOTAL PROJECT	SHEET No	TOTAL SHEETS
11	SD	var	var	11	60

REGISTERED CIVIL ENGINEER

PLANS APPROVAL DATE

REGISTERED PROFESSIONAL ENGINEER
ERWIN FOGERSON
NO. 049060
EXP. 9-30-99
CIVIL
STATE OF CALIFORNIA

AGUILAR ENGINEERING INCORPORATED
937 SOUTH VIA LATA, SUITE 500
COLTON, CA 92324

Metric

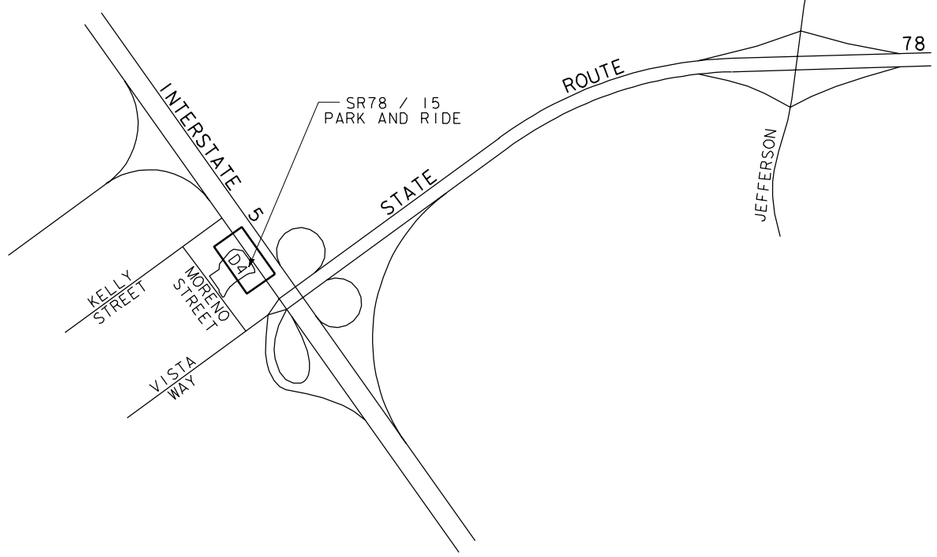

LOCATION 4

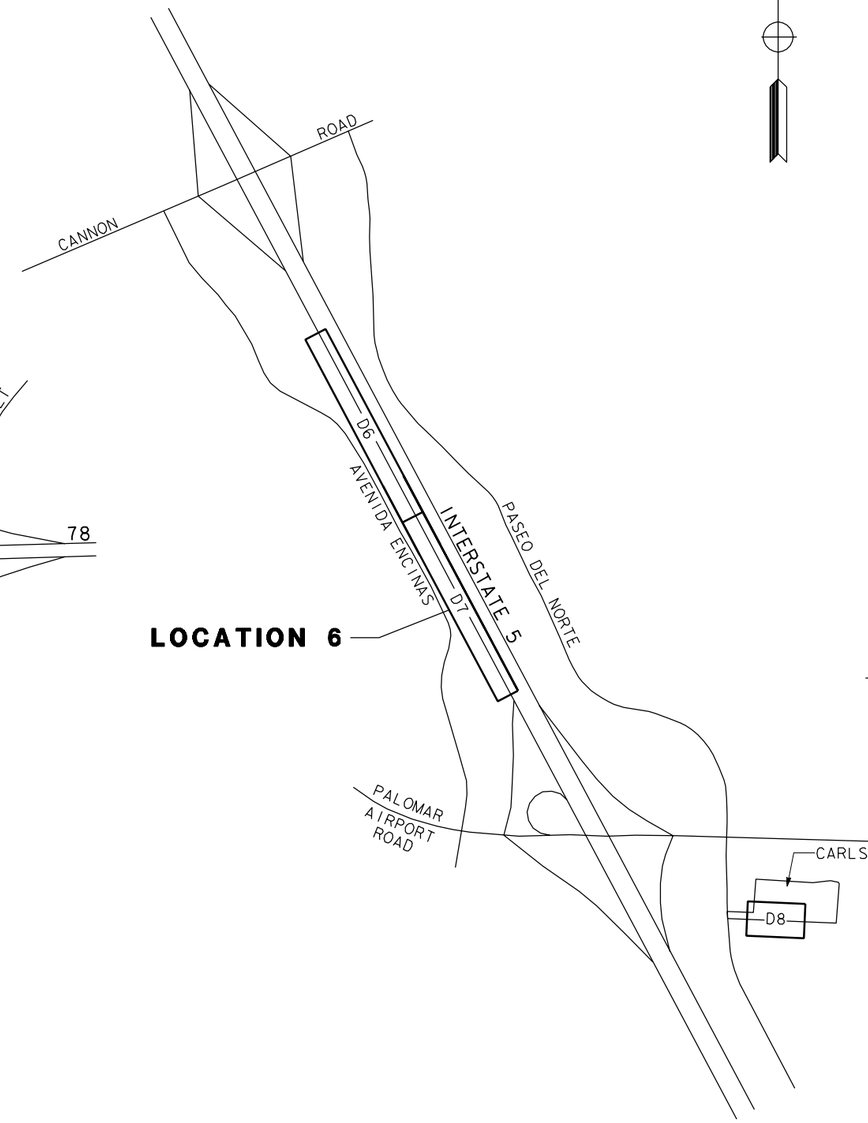

LOCATION 7

LOCATION 6 AND LOCATION 7

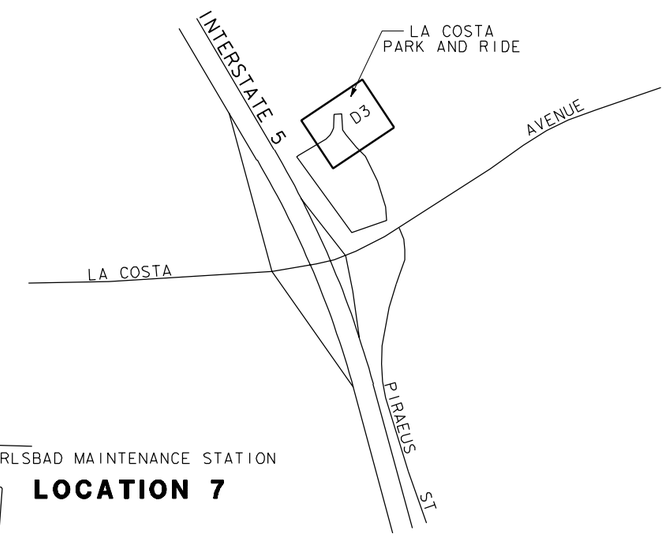

LOCATION 3

DATE ACCEPTED 8-20-99
DATE COMPLETED 8-20-99

AS BUILT
NO CORRECTIONS THIS SHEET
RESIDENT ENGINEER GARY CONKLIN-RBF & ASSOC

KEY MAP
NO SCALE

K-1

DATE	REVISED BY
	DATE REVISED

CALCULATED/DESIGNED BY
CHECKED BY

PROJECT ENGINEER

07 JUN 2000 5:30:08 q:\57704\34358\dgn\asbuilts\asbuilts without rev shown\k01.dlv

LAST REVISION 00-00-00
DATE PLOTTED => $DATE
TIME PLOTTED => $TIME

FOR REDUCED PLANS ORIGINAL SCALE IS IN MILLIMETERS 0 20 40 60 80

USERNAME => $USER
DGN FILE => $REQUEST

CU 00000

CONTRACT NO 430004A

DIST	COUNTY	ROUTE	KILOMETER POST TOTAL PROJECT	SHEET No	TOTAL SHEETS
11	SD	var	var	15	60

REGISTERED CIVIL ENGINEER

PLANS APPROVAL DATE

REGISTERED PROFESSIONAL ENGINEER ERWIN FOGERSON No. 049060 Exp. 9-30-99 CIVIL STATE OF CALIFORNIA

AGUILAR ENGINEERING INCORPORATED
937 SOUTH VIA LATA, SUITE 500
COLTON, CA 92324

Metric

NOTES:

1. FOR COMPLETE R/W AND ACCURATE ACCESS DATA, SEE R/W RECORD MAPS AT DISTRICT 11 OFFICE.
2. SEE Sht D-18 AND D-19 FOR Const DETAILS.

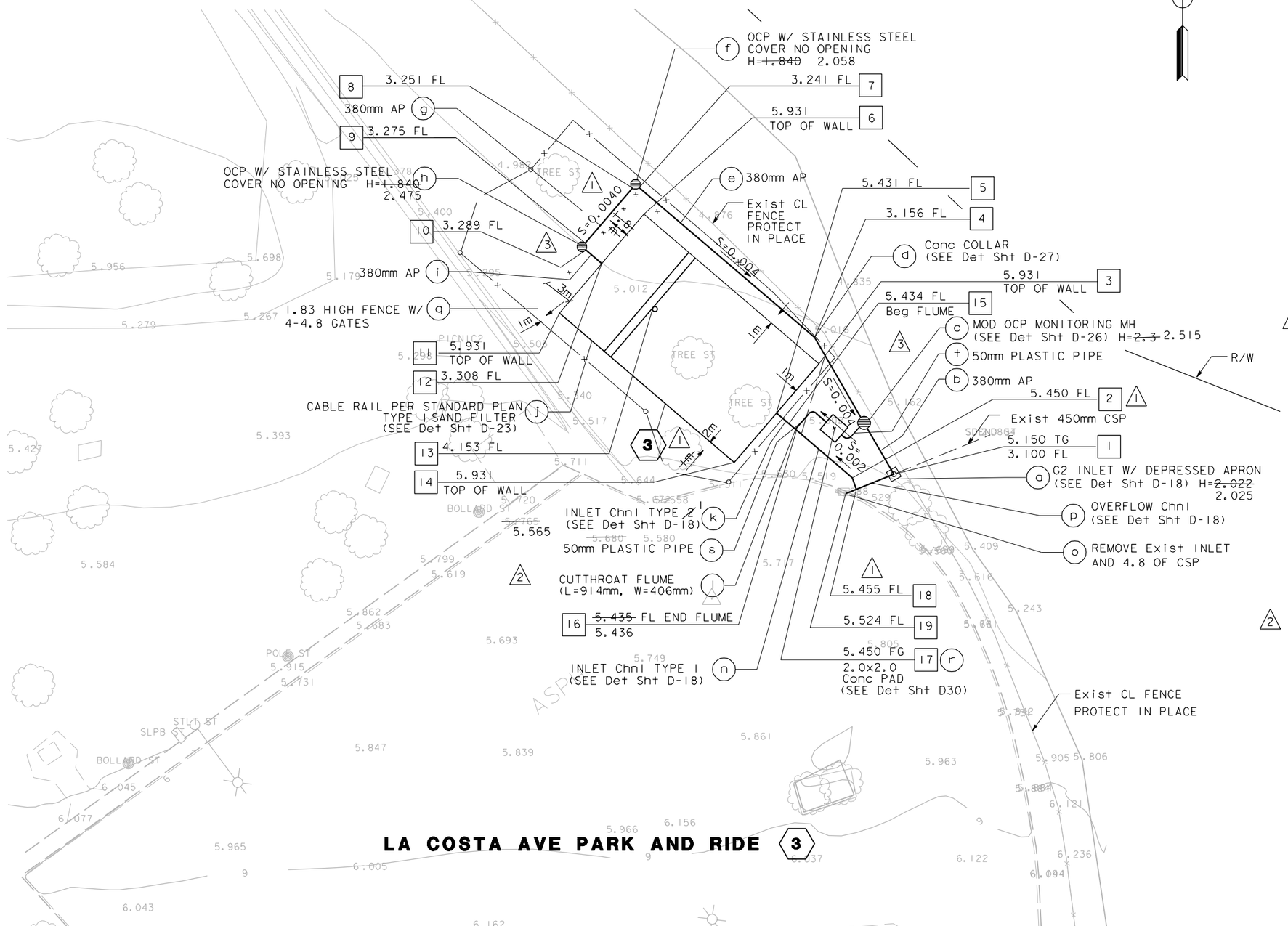

COORDINATE POINT	NORTHING	EASTING
1	602424.049	1902243.455
2	602423.723	1902239.635
3	602434.259	1902236.540
4	602436.693	1902236.155
5	602429.698	1902232.643
6	602448.056	1902220.391
7	602450.520	1902219.971
8	602450.470	1902219.336
9	602445.376	1902214.984
10	602444.742	1902215.034
11	602438.933	1902212.597
12	602443.495	1902216.494
13	602439.441	1902221.238
14	602425.136	1902228.745
15	602428.716	1902233.792
16	602428.122	1902234.487
17	602428.288	1902238.003
18	602422.643	1902239.996
19	602422.256	1902239.045

DATE ACCEPTED 8-20-99
DATE COMPLETED 8-20-99

AS BUILT

RESIDENT ENGINEER
REVISIONS BY DATE 8-20-99
DELINEATED BY

ASBUILT DRAINAGE PLAN LOCATION 3

SCALE 1 : 200

D-3

THIS PLAN ACCURATE FOR DRAINAGE ONLY

ALL DIMENSIONS ARE IN METERS UNLESS OTHERWISE SHOWN

DATE	REVISED BY	DATE REVISED
3		6-4-99
2		12-1-98
1		10-5-98

CALCULATED/DESIGNED BY
CHECKED BY
PROJECT ENGINEER

14 JUN 2000 7:50:00 q:\57704\34358\dgn\asbuilts\asbuilts with rev shown\d03.dlv

LAST REVISION 00-00-00
DATE PLOTTED => $DATE
TIME PLOTTED => $TIME

FOR REDUCED PLANS ORIGINAL SCALE IS IN MILLIMETERS 0 20 40 60 80

USERNAME => $USER
DGN FILE => $REQUEST

CU 00000

CONTRACT NO 430004A

DIST	COUNTY	ROUTE	KILOMETER POST TOTAL PROJECT	SHEET No	TOTAL SHEETS
11	SD	var	var	23	60

REGISTERED CIVIL ENGINEER

PLANS APPROVAL DATE

REGISTERED PROFESSIONAL ENGINEER ERWIN FOGERSON No. 049060 Exp. 9-30-99 CIVIL STATE OF CALIFORNIA

AGUILAR ENGINEERING INCORPORATED
937 SOUTH VIA LATA, SUITE 500
COLTON, CA 92324

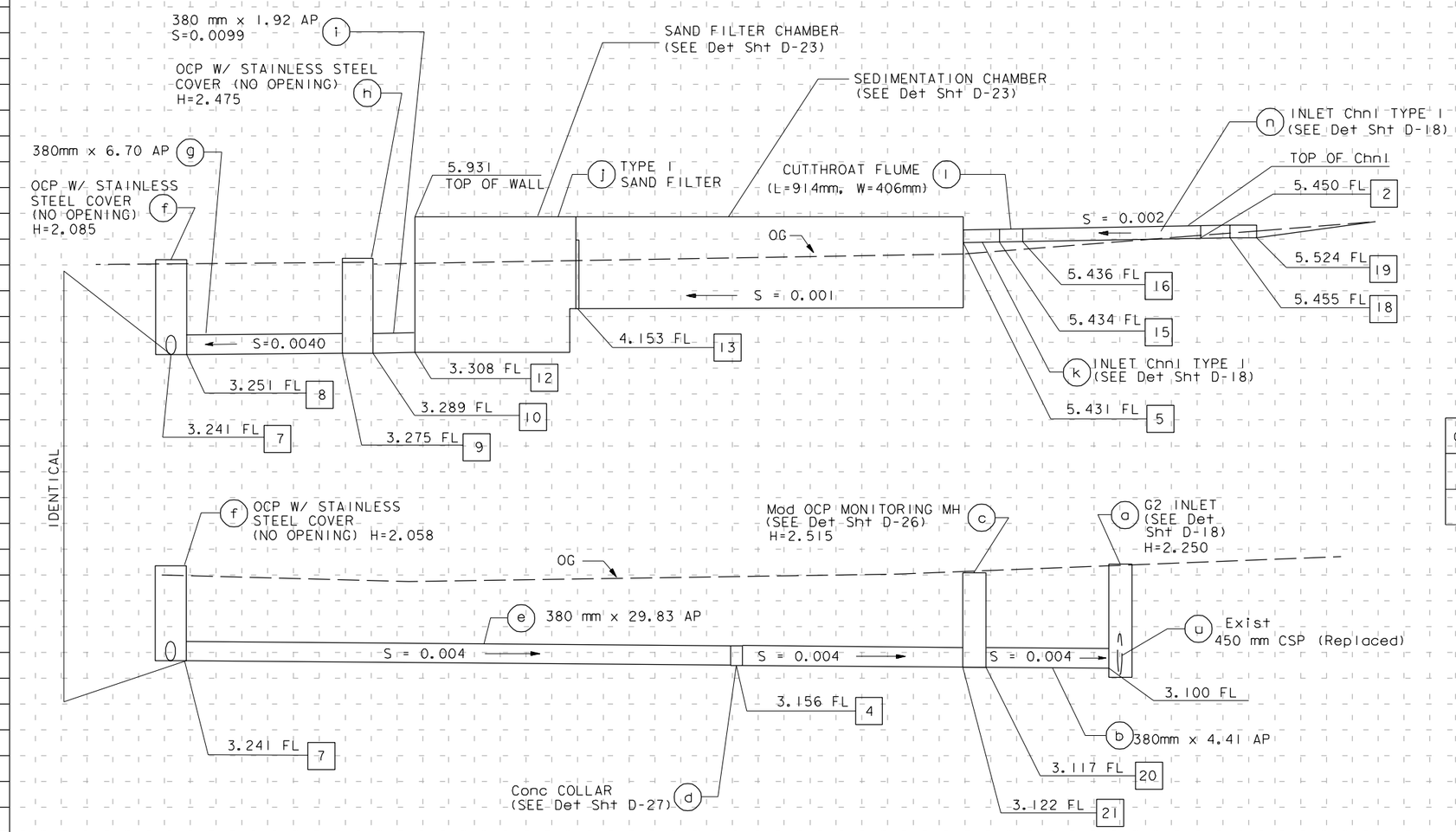

COORDINATE POINT	NORTHING	EASTING
20	602428.259	1902241.025
21	602429.298	1902240.425

DATE ACCEPTED 8-20-99
DATE COMPLETED 8-20-99

AS BUILT
NO CORRECTIONS THIS SHEET
RESIDENT ENGINEER GARY CONKLIN-RBF & ASSOC

NOTE :
SEE Sht D-3 AND D-18 FOR XX Coord POINT NORTHING AND EASTING UNLESS OTHERWISE NOTED ON PLAN.

3

DRAINAGE PROFILES LOCATION 3

SCALE: Horiz 1 : 100
Vert 1 : 50

ALL DIMENSIONS ARE IN METERS UNLESS OTHERWISE SHOWN

D-11

Station	
Cu	
M	Exc
	Emb

FOR REDUCED PLANS ORIGINAL SCALE IS IN MILLIMETERS 0 20 40 60 80

USERNAME => $$$$$$USER$$$$$$
DGN FILE => $$$$$$$$$$DGNSPEC$$$$$$$$$$

CU 00000

CONTRACT NO 430004A

LAST REVISION 00-00-00

TIME PLOTTED => $$$$$$$$YTIME$$$$$$

07 JUN 2000 4:59:02 q:\57704\34358\dgn\asbuilts\asbuilts without rev shown\dll.div

PROJECT ENGINEER

CALCULATED/ DESIGNED BY

CHECKED BY

DATE REVISED BY

DATE REVISED

DIST	COUNTY	ROUTE	KILOMETER POST TOTAL PROJECT	SHEET No	TOTAL SHEETS
11	SD	var	var	30	60

REGISTERED CIVIL ENGINEER

PLANS APPROVAL DATE

REGISTERED PROFESSIONAL ENGINEER ERWIN FOGERSON NO. 049060 EXP. 9-30-99 CIVIL STATE OF CALIFORNIA

AGUILAR ENGINEERING INCORPORATED
937 SOUTH VIA LATA, SUITE 500
COLTON, CA 92324

NOTE:
SEE Sht D-1 AND D-5 FOR XX Coord
NORTHING AND EASTING UNLESS OTHERWISE
NOTED ON PLAN.

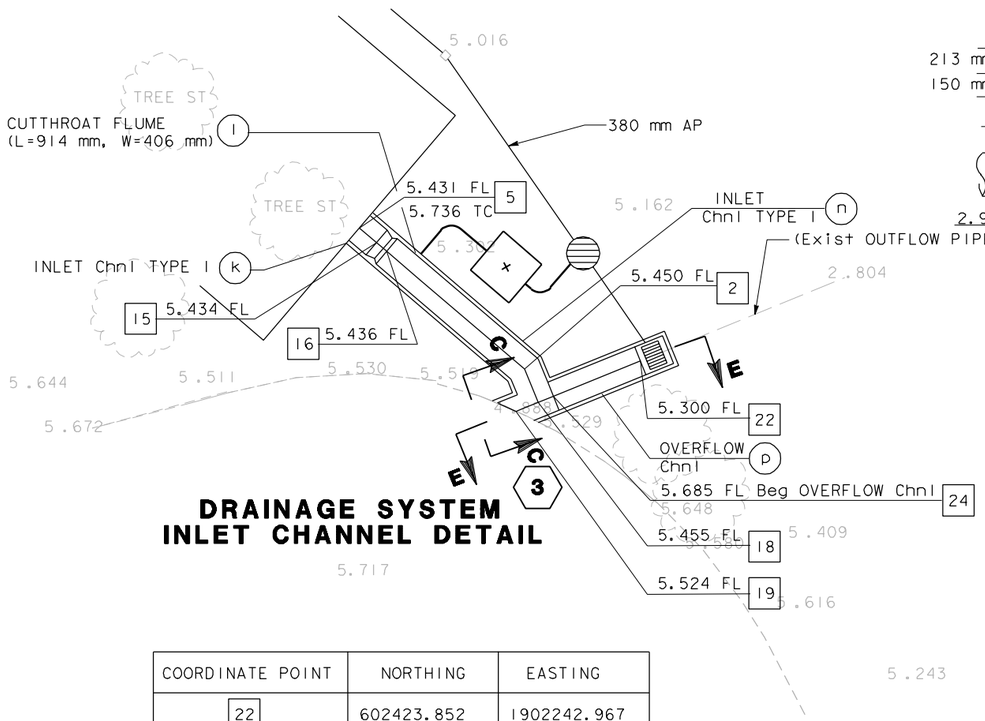

DRAINAGE SYSTEM
INLET CHANNEL DETAIL

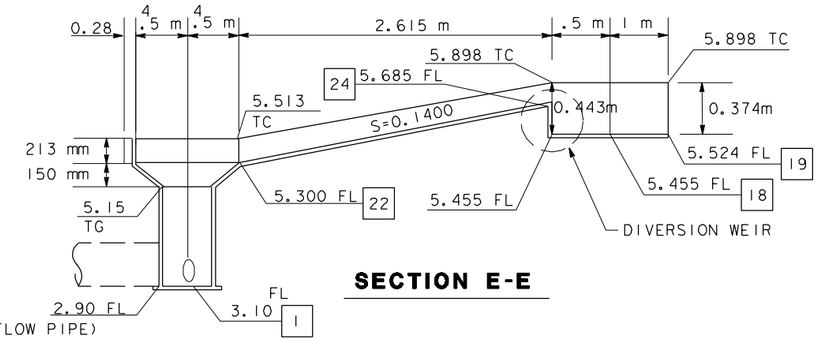

SECTION E-E

COORDINATE POINT	NORTHING	EASTING
22	602423.852	1902242.967
24	602422.834	1902240.437

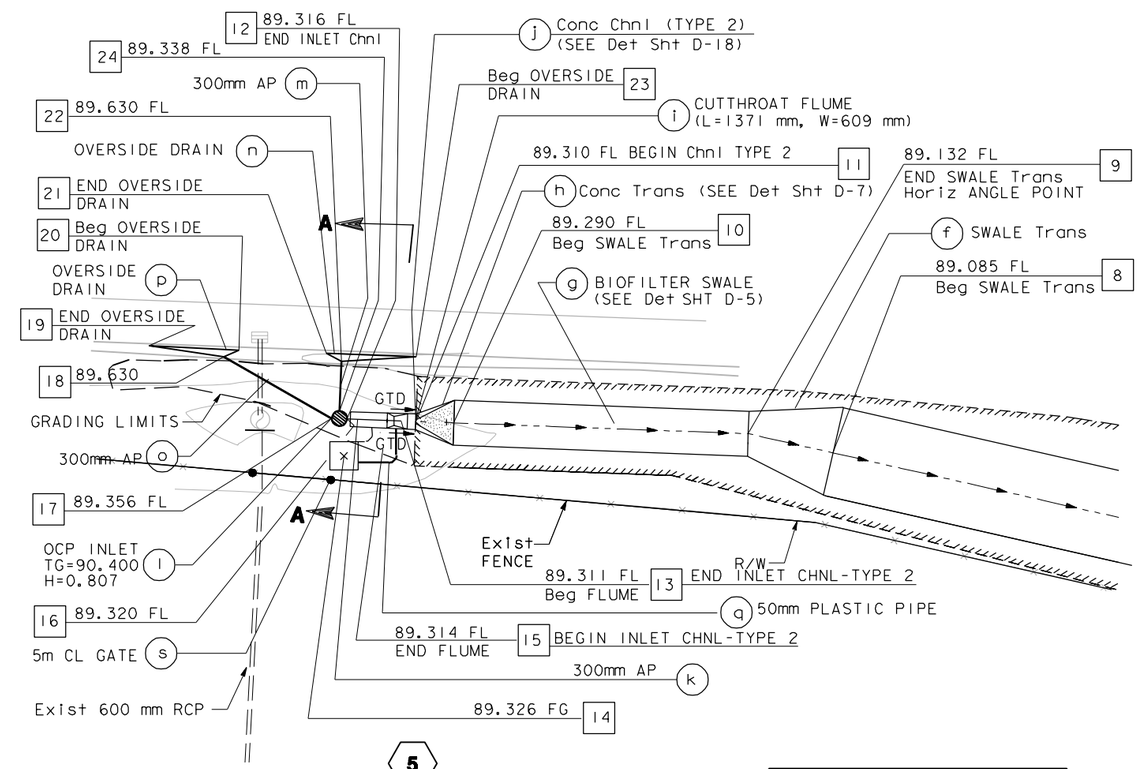

DRAINAGE SYSTEM
INLET CHANNEL DETAIL

DATE ACCEPTED 8-20-99
DATE COMPLETED 8-20-99
AS BUILT
NO CORRECTIONS THIS SHEET
RESIDENT ENGINEER GARY CONKLIN-RBF & ASSOC

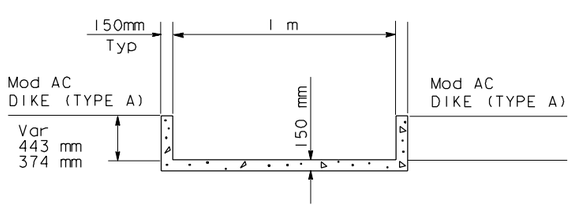

SECTION C-C

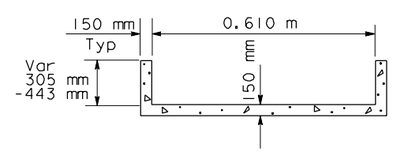

INLET CHANNEL
TYPE 1

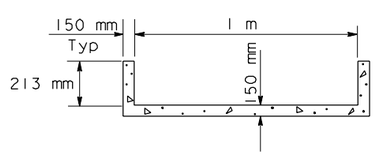

OVERFLOW CHANNEL

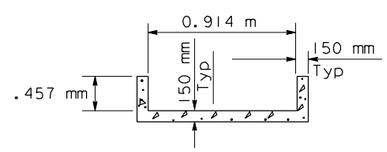

INLET CHANNEL
TYPE 2

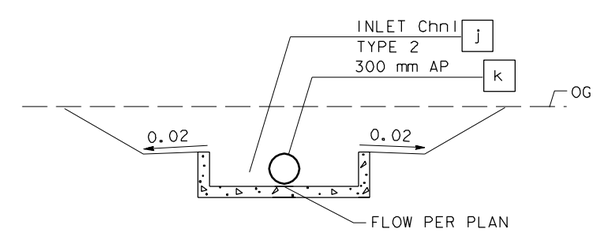

SECTION A-A

3 5

DRAINAGE DETAILS
NO SCALE

D-18

STATE OF CALIFORNIA - DEPARTMENT OF TRANSPORTATION
Caltrans
PROJECT ENGINEER
REVISED BY | DATE REVISED
CALCULATED/DESIGNED BY | CHECKED BY
DATE

07 JUN 2000 5:21:50 q:\57704\34358\dgn\asbuilts\asbuilts without rev shown\d18.dlv

FOR REDUCED PLANS ORIGINAL SCALE IS IN MILLIMETERS 0 20 40 60 80
USERNAME => $USER
DGN FILE => $REQUEST
CU 00000
CONTRACT NO 430004A
LAST REVISION 00-00-00
DATE PLOTTED => $DATE
TIME PLOTTED => $TIME

DIST	COUNTY	ROUTE	KILOMETER POST TOTAL PROJECT	SHEET No	TOTAL SHEETS
11	SD	var	var	31	60

REGISTERED CIVIL ENGINEER

PLANS APPROVAL DATE

REGISTERED PROFESSIONAL ENGINEER ERWIN FOGERSON No. 049060 Exp. 9-30-99 CIVIL STATE OF CALIFORNIA

AGUILAR ENGINEERING INCORPORATED
937 SOUTH VIA LATA, SUITE 500
COLTON, CA 92324

CONSTRUCTION LEGEND

RECONSTRUCT 75 mm AC (TYPE B) / 150 mm AB

CURVE DATA

CURVE	R	Δ	T	L
1	55.579m	16°00'08"	7.821m	15.523m
2	22.148m	36°26'30"	7.077m	13.700m
3	16.203m	40°22'12"	5.957m	11.416m

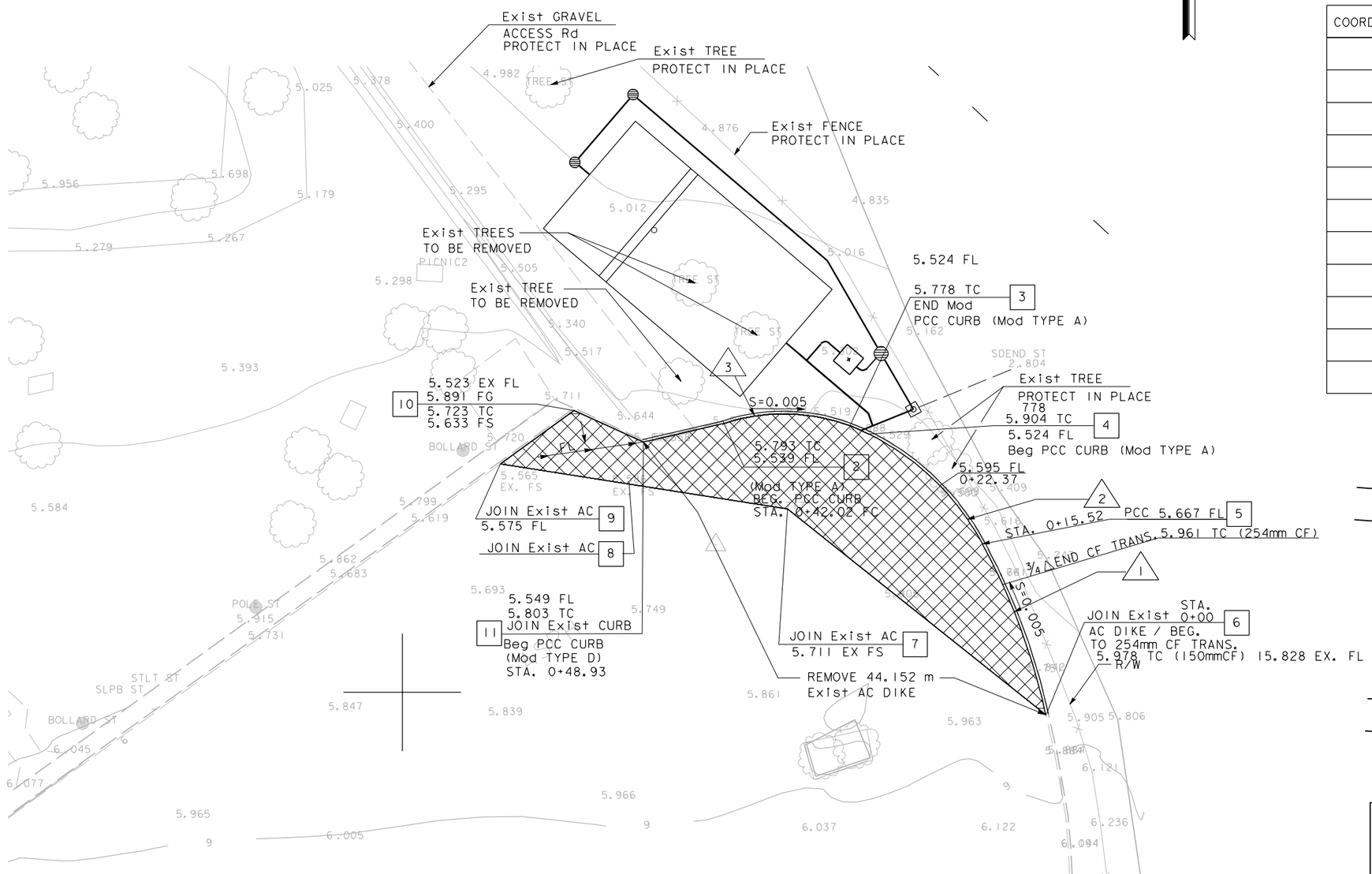

COORDINATE POINT	NORTHING	EASTING
1	602421.382	1902222.162
2	602422.819	1902227.216
3	602422.649	1902238.087
4	602421.965	1902239.658
5	602412.596	1902249.354
6	602398.089	1902254.731
7	602415.579	1902232.757
8	602417.839	1902219.269
9	602419.401	1902208.355
10	602423.950	1902214.614
11	602421.268	1902220.489

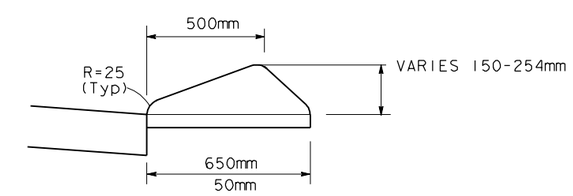

Mod TYPE D PCC CURB

NO SCALE

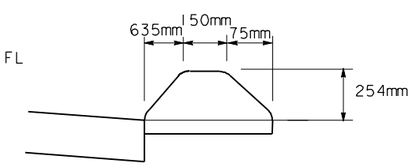

Mod TYPE PCC CURB

NO SCALE

DATE ACCEPTED 8-20-99
DATE COMPLETED 8-20-99

AS BUILT

NO CORRECTIONS THIS SHEET

RESIDENT ENGINEER GARY CONKLIN-RBF & ASSOC

3

LA COSTA AVE PARK AND RIDE

DRAINAGE DETAILS

SCALE 1 : 200

D-19

DATE	REVISED BY	DATE REVISED

CALCULATED/DESIGNED BY
CHECKED BY

PROJECT ENGINEER

07 JUN 2000 5:22:12 q:\57704\34358\dgn\asbuilts\asbuilts without rev shown\d19.div

FOR REDUCED PLANS ORIGINAL SCALE IS IN MILLIMETERS 0 20 40 60 80

USERNAME => $USER
DGN FILE => $REQUEST

CU 00000

CONTRACT NO 430004A

LAST REVISION 00-00-00
DATE PLOTTED => $DATE
TIME PLOTTED => $TIME

DIST	COUNTY	ROUTE	KILOMETER POST TOTAL PROJECT	SHEET No	TOTAL SHEETS
11	SD	var	var	35	60

REGISTERED CIVIL ENGINEER

PLANS APPROVAL DATE

REGISTERED PROFESSIONAL ENGINEER ERWIN FOGERSON NO. 049060 EXP. 9-30-99 CIVIL STATE OF CALIFORNIA

AGUILAR ENGINEERING INCORPORATED
937 SOUTH VIA LATA, SUITE 500
COLTON, CA 92324

NOTES

ALL OUTSIDE WALL SURFACES SHALL BE WATERPROOFED PER STANDARD SPECIFICATION SECTION 54.

DIMENSION TABLE

No.	D_1	D_2	D_3	L	L_1	L_2	L_3	T_1	T_2	W_1	INLET TYPE
3	1.763	1.778	2.623	21.240	15	5.60	0.240	SEE Std PLAN B3-1	0.200	12.000	WEIR
4	3.909	3.917	4.757	12.740	8	4.00	0.240	SEE Std PLAN B3-1	0.300	7.000	PIPE

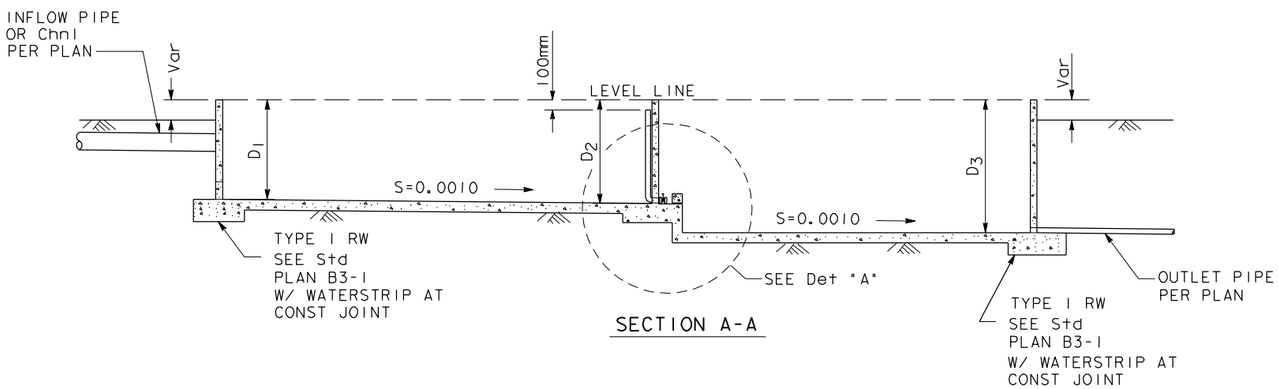

SECTION A-A

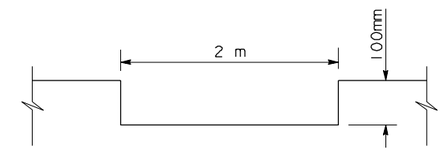

EMERGENCY OVERFLOW

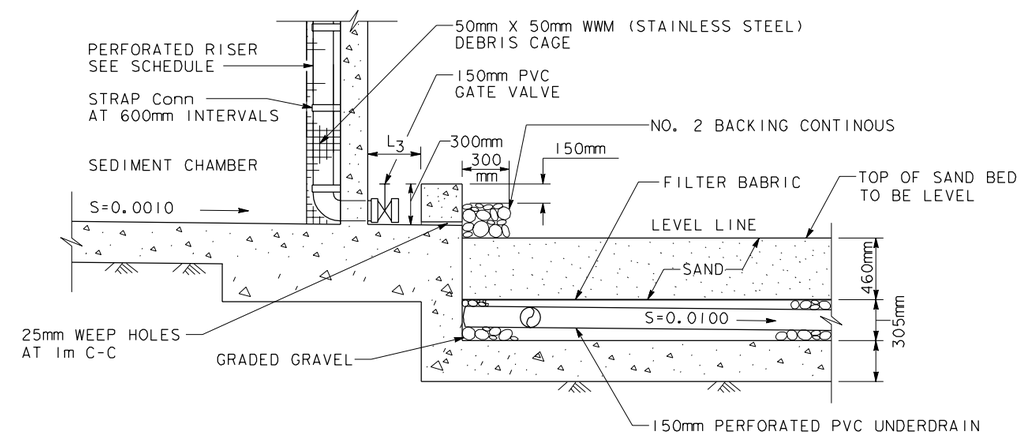

DETAIL "A"

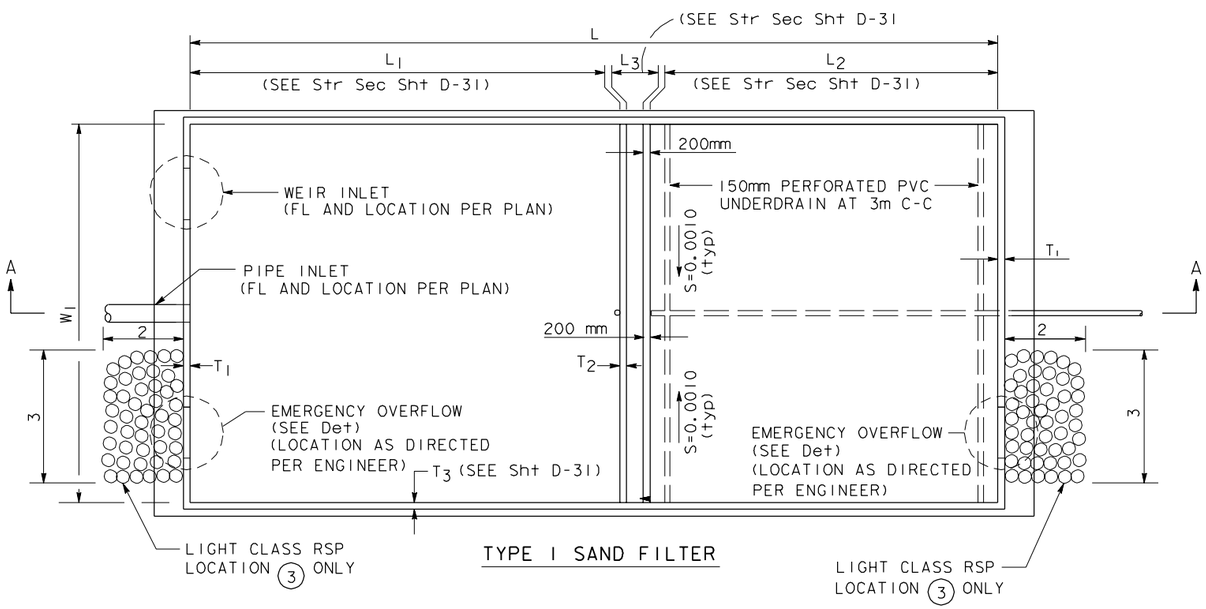

TYPE I SAND FILTER

PERFORATED RISER SCHEDULE

PIPE Dia	150 mm
Vert HOLE SPACING	64 mm
PERFORATIONS PER ROW	9
Dia OF PERFORATION	25 mm

DATE ACCEPTED 8-20-99
DATE COMPLETED 8-20-99
AS BUILT
NO CORRECTIONS THIS SHEET
RESIDENT ENGINEER GARY CONKLIN-RBF & ASSOC

3 4

DRAINAGE DETAILS

NO SCALE

D-23

ALL DIMENSIONS ARE IN METERS UNLESS OTHERWISE NOTED

DATE	REVISED BY	DATE REVISED

CALCULATED/DESIGNED BY
CHECKED BY
PROJECT ENGINEER

07 JUN 2000 5:23:30 q:\57704\34358\dgn\asbuilts\asbuilts without rev shown\d23.div

LAST REVISION 00-00-00
DATE PLOTTED => $DATE
TIME PLOTTED => $TIME

FOR REDUCED PLANS ORIGINAL SCALE IS IN MILLIMETERS 0 20 40 60 80

USERNAME => $USER
DGN FILE => $REQUEST

CU 00000

CONTRACT NO 430004A

DIST	COUNTY	ROUTE	KILOMETER POST TOTAL PROJECT	SHEET No	TOTAL SHEETS
11	SD	var	var	38	60

REGISTERED CIVIL ENGINEER

PLANS APPROVAL DATE

REGISTERED PROFESSIONAL ENGINEER ERWIN FOGERSON NO. 049060 EXP. 9-30-99 CIVIL STATE OF CALIFORNIA

AGUILAR ENGINEERING INCORPORATED
937 SOUTH VIA LATA, SUITE 500
COLTON, CA 92324

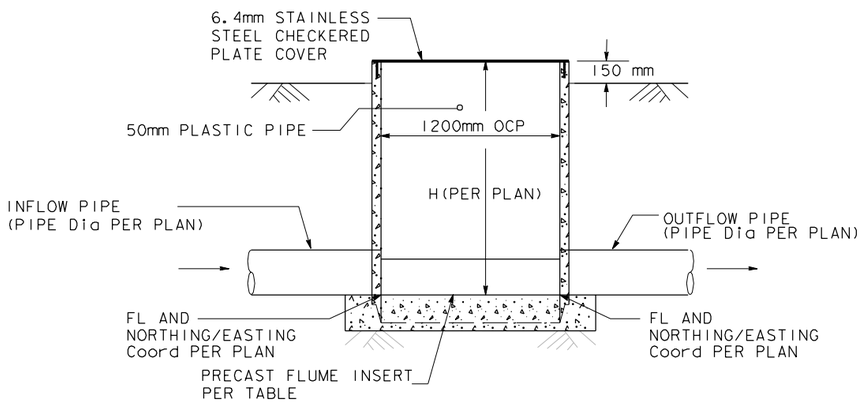

SECTION A-A

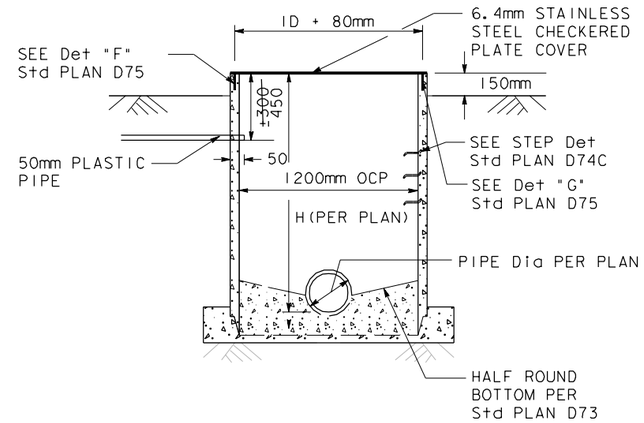

SECTION B-B

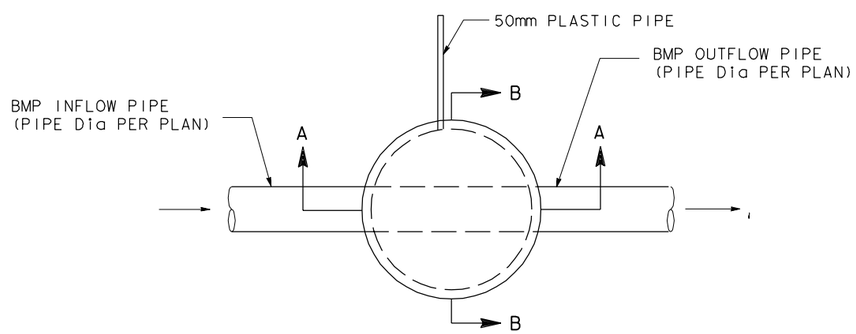

PLAN

MODIFIED OCP MONITORING MANHOLE

FLUME TABLE				
DRAINAGE SYSTEM	UNIT	INFLOW	OUTFLOW	FLUME TYPE AND SIZE
3	1		X	380mm LOW FLOW PALMER BOWLUS

DATE ACCEPTED 8-20-99
DATE COMPLETED 8-20-99

AS BUILT
NO CORRECTIONS THIS SHEET
RESIDENT ENGINEER GARY CONKLIN-RBF & ASSOC

ALL DIMENSIONS ARE IN METERS

3

DRAINAGE DETAILS

NO SCALE

D-26

DATE	REVISED BY	DATE REVISED

CALCULATED/DESIGNED BY
CHECKED BY
PROJECT ENGINEER

07 JUN 2000 5:24:30 q:\57704\34358\dgn\asbuilts\asbuilts without rev shown\d26.dlv

LAST REVISION 00-00-00
DATE PLOTTED => $DATE
TIME PLOTTED => $TIME

FOR REDUCED PLANS ORIGINAL SCALE IS IN MILLIMETERS 0 20 40 60 80

USERNAME => $USER
DGN FILE => $REQUEST

CU 00000

CONTRACT NO 430004A

DIST	COUNTY	ROUTE	KILOMETER POST TOTAL PROJECT	SHEET No	TOTAL SHEETS
11	SD	var	var	39	60

REGISTERED CIVIL ENGINEER

PLANS APPROVAL DATE

REGISTERED PROFESSIONAL ENGINEER ERWIN FOGERSON NO. 049060 EXP. 9-30-99 CIVIL STATE OF CALIFORNIA

AGUILAR ENGINEERING INCORPORATED
937 SOUTH VIA LATA, SUITE 500
COLTON, CA 92324

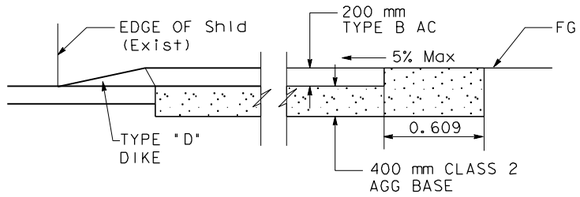

TYPICAL SECTION WITH DIKE

NO SCALE

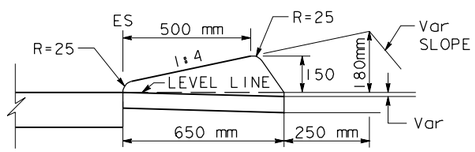

TYPE "D"

MOUNTABLE DIKE

NO SCALE

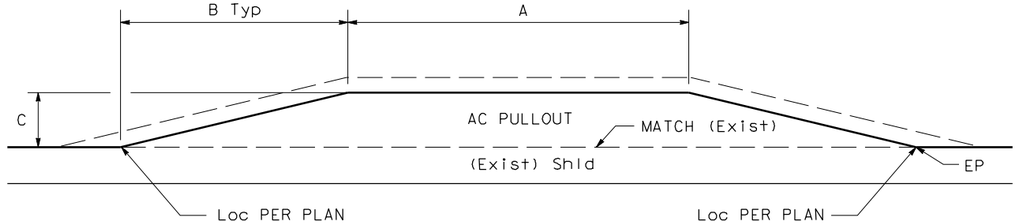

TYPICAL PULLOUT DETAIL

NO SCALE

TYPICAL B PULLOUT

	A	B	C
4	14.000	6.000	3.500
6	22.860	15.890	3.500

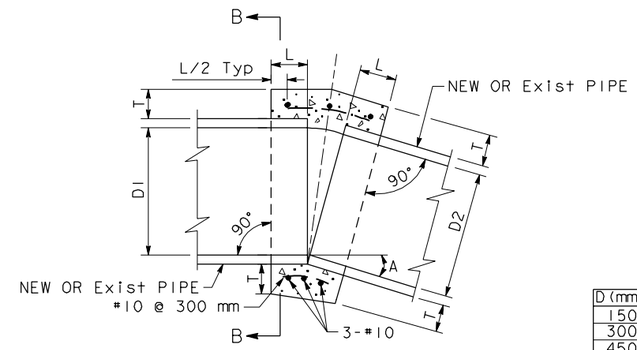

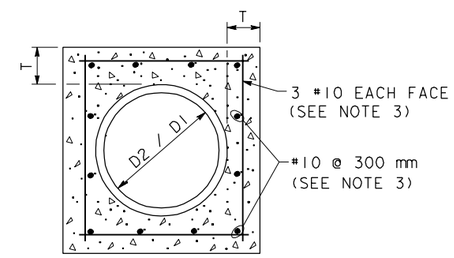

SECTION B-B

FOR D $\leqslant$ 1800 mm

D (mm)	L (mm)	T (mm)
150	300	100
300	300	100
450	300	130
600	300	150
900	450	200
1200	450	250
1350	450	250
1500	550	280
1650	550	280
1800	600	300

NOTES:

1. WHERE PIPES OF DIFFERENT Dia's ARE JOINED W/ A Conc COLLAR, 'L' AND 'T' SHALL BE THOSE OF THE LARGER PIPE. D=D1 OR D2, WHICH EVER IS GREATER.
2. FOR PIPE SIZE NOT LISTED USE NEXT SIZE LARGER.
3. OMIT Reinf ON PIPES 600 mm AND LESS IN Dia AND ON ALL PIPES WHERE ANGLE A IS LESS THAN 10°. Reinf't SHALL BE PLACED 40 mm CLEAR FROM OUTSIDE Dia OF PIPE.
4. JOIN PIPES AT INVERTS.
5. INSIDE LAYER OF Reinf't SHALL BE PLACED 40 mm Clr FROM OUTSIDE Dia OF PIPE. PLACE OUTSIDE LAYER OF Reinf't 200 mm FROM INSIDE LAYER OF Reinf't.

CONCRETE COLLAR

DATE ACCEPTED 8-20-99
DATE COMPLETED 8-20-99

AS BUILT
NO CORRECTIONS THIS SHEET
RESIDENT ENGINEER GARY CONKLIN-RBF & ASSOC

3 4 5 6 7

DRAINAGE DETAILS

NO SCALE

ALL DIMENSIONS ARE IN METERS
UNLESS OTHERWISE SHOWN

D-27

DATE	REVISED BY	DATE REVISED

CALCULATED/DESIGNED BY
CHECKED BY
PROJECT ENGINEER

07 JUN 2000 5:24:48 q:\57704\34358\dgn\asbuilts\asbuilts without rev shown\d27.dlv

LAST REVISION 00-00-00
DATE PLOTTED => $DATE
TIME PLOTTED => $TIME

FOR REDUCED PLANS ORIGINAL SCALE IS IN MILLIMETERS 0 20 40 60 80

USERNAME => $USER
DGN FILE => $REQUEST

CU 00000

CONTRACT NO 430004A

DIST	COUNTY	ROUTE	KILOMETER POST TOTAL PROJECT	SHEET No	TOTAL SHEETS
11	SD	var	var	41	60

REGISTERED CIVIL ENGINEER

PLANS APPROVAL DATE

REGISTERED PROFESSIONAL ENGINEER ERWIN FOGERSON NO. 049060 EXP. 9-30-99 CIVIL STATE OF CALIFORNIA

AGUILAR ENGINEERING INCORPORATED
937 SOUTH VIA LATA, SUITE 500
COLTON, CA 92324

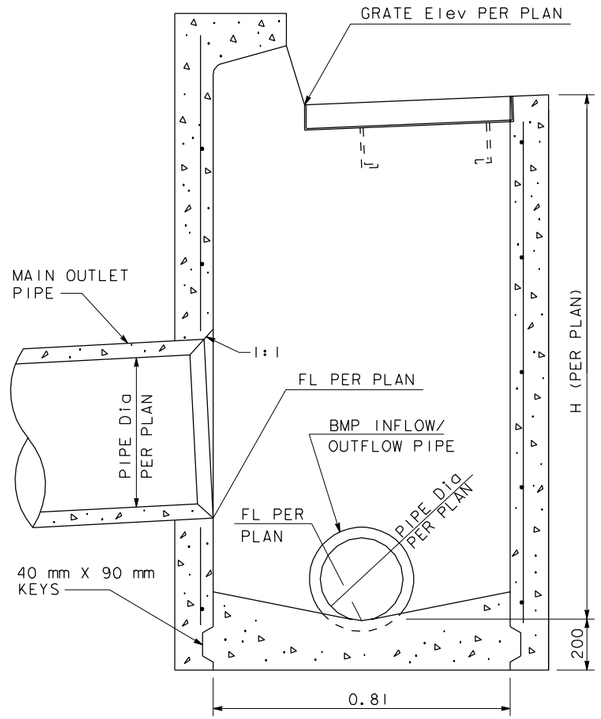

SECTION A-A

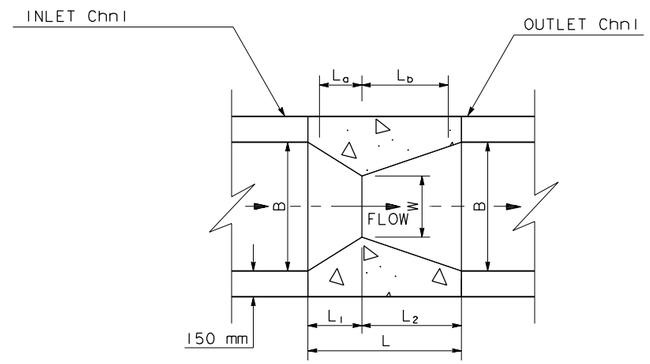

PLAN VIEW

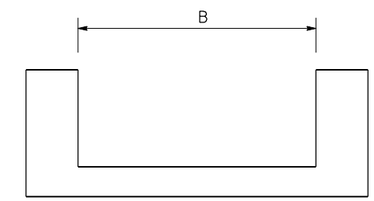

END VIEW

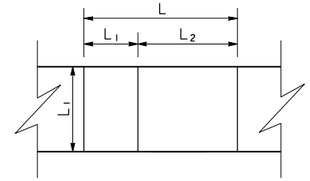

PROFILE VIEW

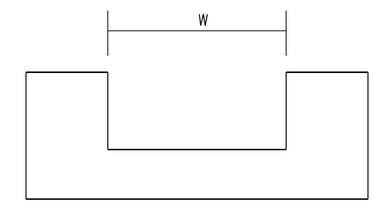

PROFILE VIEW

CUTTHROAT FLUME

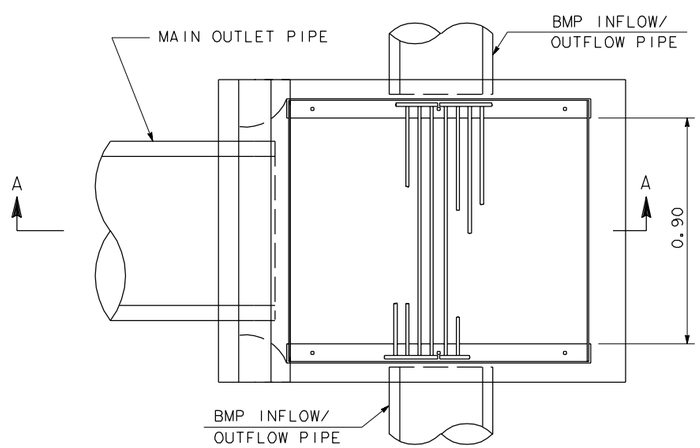

PLAN

TYPE GO INLET DETAIL

DESCRIPTION	L	L_1	L_2	B	W	L_a	L_b
L=914 mm, W=406 mm	0.914	0.305	0.609	0.610	0.406	0.203	0.508
L=1371 mm, W=305 mm	1.371	0.457	0.914	0.609	0.305	0.305	0.762
L=1371 mm, W=609 mm	1.371	0.457	0.914	0.914	0.609	0.305	0.762

DATE ACCEPTED 8-20-99
DATE COMPLETED 8-20-99
AS BUILT
NO CORRECTIONS THIS SHEET
RESIDENT ENGINEER GARY CONKLIN-RBF & ASSOC

3 5 6 7

DRAINAGE DETAILS

NO SCALE

D-29

ALL DIMENSIONS ARE IN MILLIMETERS UNLESS OTHERWISE SHOWN

DATE	REVISED BY	DATE REVISED

CALCULATED/DESIGNED BY
CHECKED BY
PROJECT ENGINEER

07 JUN 2000 5:25:26 q:\57704\34358\dgn\asbuilts\asbuilts without rev shown\d29.dlv

LAST REVISION 00-00-00
DATE PLOTTED => $DATE
TIME PLOTTED => $TIME

FOR REDUCED PLANS ORIGINAL SCALE IS IN MILLIMETERS 0 20 40 60 80
USERNAME => $USER
DGN FILE => $REQUEST
CU 00000
CONTRACT NO 430004A

DIST	COUNTY	ROUTE	KILOMETER POST TOTAL PROJECT	SHEET No	TOTAL SHEETS
11	SD	var	var	42	60

REGISTERED CIVIL ENGINEER

PLANS APPROVAL DATE

REGISTERED PROFESSIONAL ENGINEER ERWIN FOGERSON NO. 049060 EXP. 9-30-99 CIVIL STATE OF CALIFORNIA

AGUILAR ENGINEERING INCORPORATED
937 SOUTH VIA LATA, SUITE 500
COLTON, CA 92324

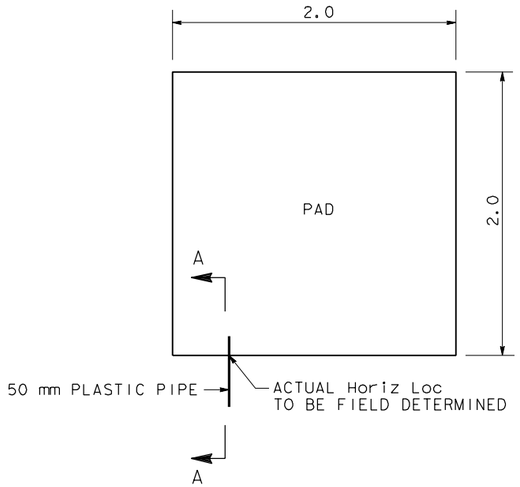

PLAN

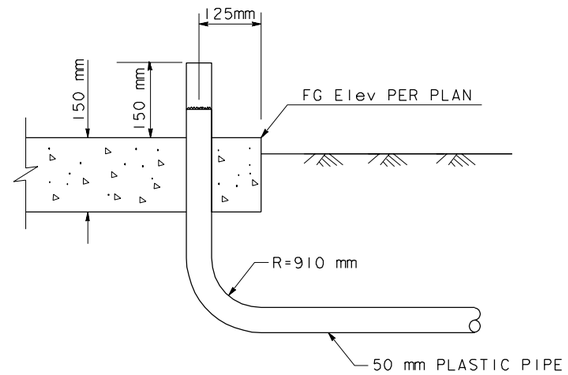

SECTION A - A

2.0 X 2.0 CONCRETE PAD DETAILS

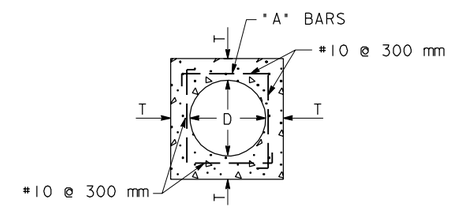

SECTION C-C

STEEL SCHEDULE			
D (mm)	T (mm)	"A"	"B"-"C"
300	115	#10 @ 150 mm	#16
450	130		
600	150		
750	180		
900	190		
1050	200		
1200	200	#16 @ 150 mm	#19
1350	200		
1500	250		
1650	280		
1800	280		

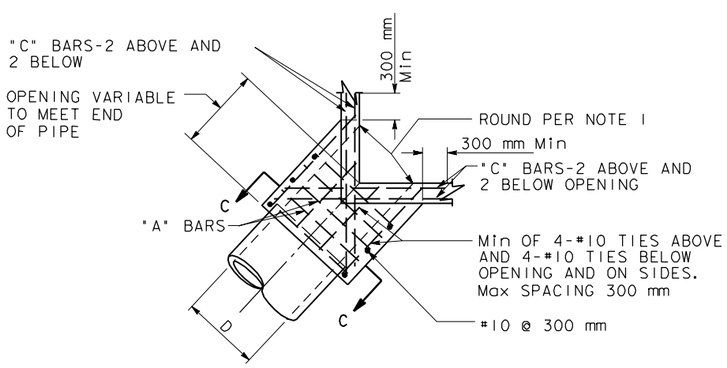

PLAN

CORNER CONNECTION

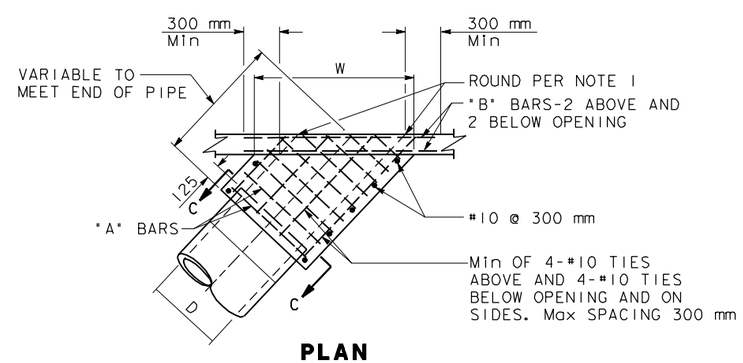

PLAN

SIDE CONNECTION

NOTES:

1. ROUND EDGE OF OUTLET TO 75 mm RADIUS.
2. Reinf't SHALL BE 40 mm CLEAR FROM THE FACE OF Conc.
3. IN CONNECTING TO AN Exist Str BREAK OUT PORTIONS OF THE Exist Str 150 mm OUTSIDE ITS INTERSECTION W/ THE NEW CONNECTION. BEND ENDS OF #10 BARS OVER CONNECTION OPENING AS REQUIRED.

MONOLITHIC CATCH BASIN CONNECTION

DATE ACCEPTED 8-20-99
DATE COMPLETED 8-20-99

AS BUILT

NO CORRECTIONS THIS SHEET

RESIDENT ENGINEER GARY CONKLIN-RBF & ASSOC

1 2 3 4 5 6 7

DRAINAGE DETAILS

NO SCALE

D-30

ALL DIMENSIONS ARE IN METERS UNLESS OTHERWISE SHOWN

DATE	REVISED BY	DATE REVISED

CALCULATED/DESIGNED BY
CHECKED BY
PROJECT ENGINEER

07 JUN 2000 5:25:44 q:\57704\34358\dgn\asbuilts\asbuilts without rev shown\d30.dlv

FOR REDUCED PLANS ORIGINAL SCALE IS IN MILLIMETERS 0 20 40 60 80

USERNAME => $USER
DGN FILE => $REQUEST

CU 00000

CONTRACT NO 430004A

LAST REVISION 00-00-00
DATE PLOTTED => $DATE
TIME PLOTTED => $TIME

DIST	COUNTY	ROUTE	KILOMETER POST TOTAL PROJECT	SHEET No	TOTAL SHEETS
11	SD	var	var	43	60

REGISTERED CIVIL ENGINEER

PLANS APPROVAL DATE

REGISTERED PROFESSIONAL ENGINEER ERWIN FOGERSON NO. 049060 EXP. 9-30-99 CIVIL STATE OF CALIFORNIA

AGUILAR ENGINEERING INCORPORATED
937 SOUTH VIA LATA, SUITE 500
COLTON, CA 92324

GENERAL NOTES:

1. STRUCTURAL CONCRETE SHALL BE CLASS "1".
2. ALL LONGITUDINAL BARS SHALL BE AS SHOWN. PLACE BARS IN BOTTOM SLAB SYMMETRICALLY ABOUT CENTERLINE. PLACE BARS IN WALLS STARTING AT TOP WITH 50mm OF CLEAR COVER.
3. CLEAR COVER FOR STEEL SHALL BE 50mm FOR WALLS AND 75mm EACH FACE FOR BOTTOM SLAB.
4. STEEL IS DIMENSIONED TO BACK OF BAR BEND.
5. FOR CONSTRUCTION ON CURVES, STRAIGHT TRANSVERSE BARS SHALL BE ALIGNED RADIALLY WITH SPACING MEASURED AT FACE OF WALL. FOR L-BARS IN WALLS, SPACING SHALL BE MEASURED BETWEEN THE VERTICAL LEGS OF BARS.
6. ALL TRANSVERSE CONSTRUCTION JOINTS SHALL BE IN A VERTICAL PLANE NORMAL TO THE CENTERLINE AND THE SPACING THEREOF SHALL NOT EXCEED 15 METERS OR BE LESS THAN 3 METERS. CONTINUOUS KEYWAYS SHALL BE CONSTRUCTED AS SHOWN IN DETAIL A. A COMPLETE CURTAIN OF TRANSVERSE STEEL SHALL BE PLACED 75mm FROM EACH FACE OF THE JOINTS AND LONGITUDINAL STEEL WILL NOT BE CONTINUOUS THROUGH THE JOINTS. IN ADDITION, EXPANSION JOINTS SHALL BE CONSTRUCTED BETWEEN REINFORCED CONCRETE CHANNEL AND REINFORCED CONCRETE BOX SECTIONS AS SHOWN IN DETAIL B. DOWELS SHALL BE PLACED AT 300mm SPACING CENTERED IN THE MIDDLE THIRD OF THE BOTTOM SLAB AND THE TOP THIRD OF SIDE WALLS. A MINIMUM OF 3 DOWELS PER SLAB AND WALLS SHALL BE PLACED.
7. ALL QUANTITIES SHOWN ARE APPROXIMATE.
8. ALL SPLICES ARE SUBJECT TO APPROVAL BY THE RESIDENT ENGINEER.
9. THE BAR LENGTH SHALL VARY UNIFORMLY THROUGHOUT THE TRANSITIONS.

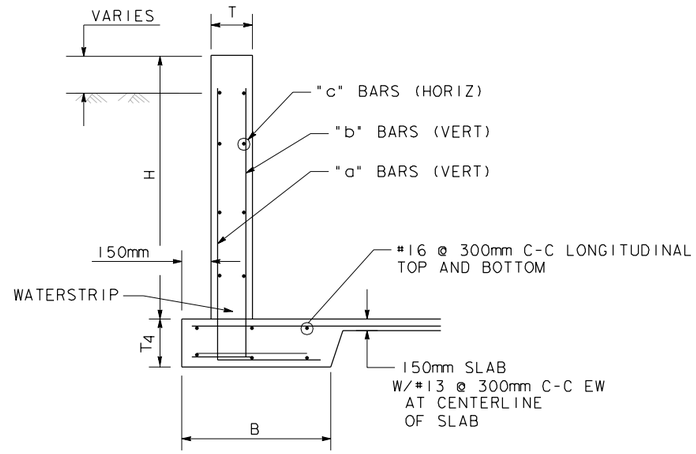

END WALLS TYPICAL SECTION

H	B	T	"a" BARS SPACING	"b" BARS SPACING	"c" BARS SPACING	T_4	"a" BARS	"b" BARS	"c" BARS
1.752	1.524	200mm	300mm	300mm	450mm	450mm	16	13	13
2.438	2.286	200mm	150mm	300mm	450mm	450mm	16	13	13
3.000	2.743	250mm	150mm	300mm	300mm	450mm	16	16	13
3.917	3.505	300mm	150mm	300mm	300mm	450mm	22	16	16
4.724	4.114	380mm	150mm	300mm	300mm	450mm	25	16	16
5.638	5.182	450mm	150mm	300mm	300mm	600mm	29	19	16
6.477	5.638	530mm	150mm	300mm	300mm	600mm	32	19	16

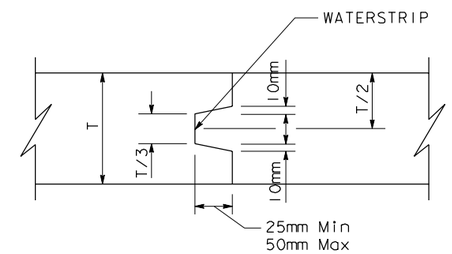

TRANSVERSE CONSTRUCTION JOINT

DETAIL A

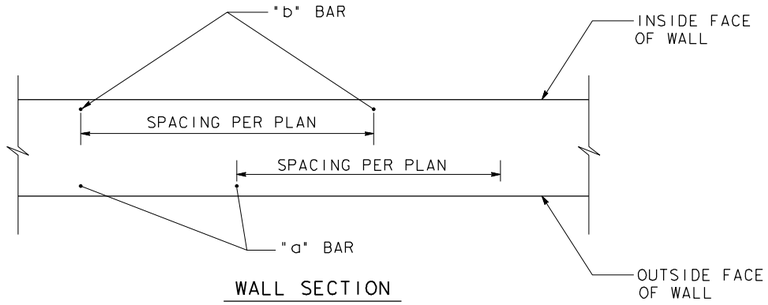

WALL SECTION

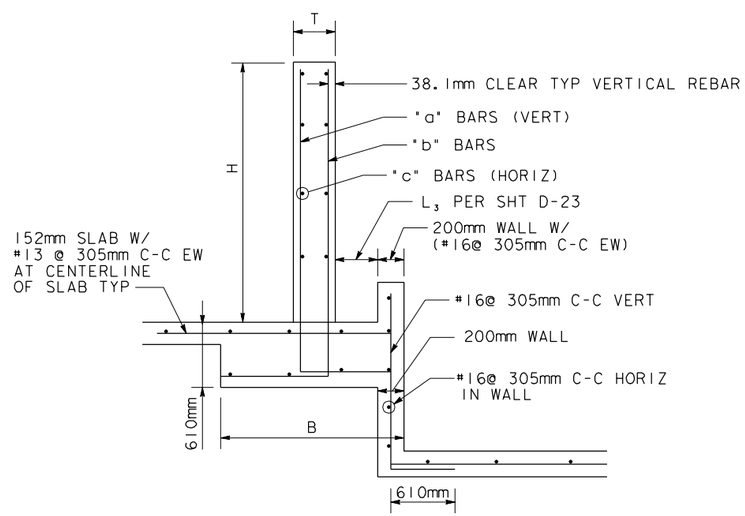

MIDDLE WALL TYPICAL SECTION

H	B	T	"a" BARS SPACING	"b" BARS SPACING	"c" BARS SPACING	"a" BARS	"b" BARS	"c" BARS
1.829	1.774	200mm	300mm	300mm	450mm	13	13	13
3.000	2.688	250mm	150mm	300mm	450mm	19	16	16
3.886	3.603	300mm	150mm	300mm	300mm	22	16	16
4.724	5.017	380mm	150mm	300mm	300mm	25	16	16
5.638	6.846	450mm	150mm	300mm	300mm	32	19	16

DESIGN DATA :

LIVE LOAD = 7.26 TONNE
SOIL DENSITY = 1.76 TONNE/m3
ALLOWABLE STRESSES :
fc = 28 MPa
f'c = 12 MPa
fy = 414 MPa
fs = 165 MPa

Min LAP :

"a" BARS = 450 mm
"b" BARS = 775 mm
"c" BARS = 400 mm

DATE ACCEPTED 8-20-99
DATE COMPLETED 8-20-99

AS BUILT
NO CORRECTIONS THIS SHEET
RESIDENT ENGINEER GARY CONKLIN-RBF & ASSOC

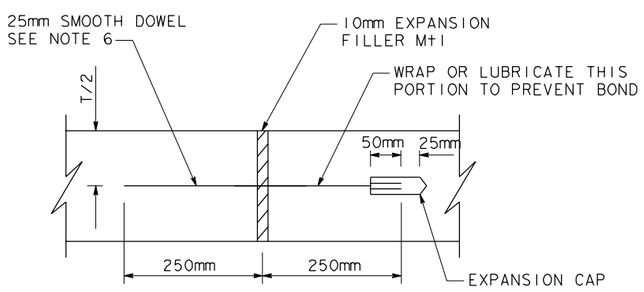

TRANSVERSE EXPANSION JOINT

DETAIL B

2 3 4

DRAINAGE DETAILS

NO SCALE

D-31

DATE	REVISED BY	DATE REVISED

CALCULATED/DESIGNED BY
CHECKED BY
PROJECT ENGINEER

07 JUN 2000 5:26:01 qt\57704\34358\dgn\asbuilts\asbuilts without rev shown\d31.dlv

LAST REVISION 00-00-00
DATE PLOTTED => $DATE
TIME PLOTTED => $TIME

FOR REDUCED PLANS ORIGINAL SCALE IS IN MILLIMETERS 0 20 40 60 80

USERNAME => $USER
DGN FILE => $REQUEST

CU 00000

CONTRACT NO 430004A

DIST	COUNTY	ROUTE	KILOMETER POST TOTAL PROJECT	SHEET No	TOTAL SHEETS
11	SD	var	var	46	60

REGISTERED CIVIL ENGINEER

PLANS APPROVAL DATE

REGISTERED PROFESSIONAL ENGINEER ERWIN FOGERSON No. 049060 Exp. 9-30-99 CIVIL STATE OF CALIFORNIA

AGUILAR ENGINEERING INCORPORATED
937 SOUTH VIA LATA, SUITE 500
COLTON, CA 92324

Metric

ALTERNATIVE PIPE CULVERTS ALLOWABLE PIPE MATERIAL AND PROTECTION

DESIGNATION	RCP SIZE (mm)	PPC SIZE (mm)	HDPE(SH) SIZE (mm)			
150 mm AP	N/A	150	150			
200 mm AP	N/A	200	200			
250 mm AP	N/A	250	250			

ALTERNATIVE PIPE CULVERTS ALLOWABLE PIPE MATERIAL AND PROTECTION

DESIGNATION	RCP SIZE (mm)	PPC SIZE (mm)	HDPE(SH) SIZE (mm)	SSRP		
300 mm AP	300	300	300			
380 mm AP	380	380	380			
450 mm AP	450	450	450			

LEGEND AND ABBREVIATIONS

GCP, GI, GDI - INLET TYPE
D - DOWNDRAIN JOINT TYPE
S - STANDARD JOINT TYPE
P - POSITIVE JOINT TYPE
CSP - CORRUGATED STEEL PIPE
PPC - PLASTIC PIPE CULVERT
SSRP - STEEL SPIRAL RIB PIPE
SH - SMOOTH INSIDE WALL
REM. -REMOVE
REP. -REPLACE

DRAINAGE SYSTEM No	DRAINAGE UNIT	REMOVE DRAINAGE FACILITY (EA)	REMOVE PIPE (m)	REMOVE CL FENCE * (m)	CL FENCE * (N) (m)	RECONSTRUCT Exist CURB * (N) (m3)	DITCH EXCAVATION (m3)	REMODEL DRAINAGE FACILITY (EA)	AGGREGATE BASE (CLASS II) * (N) (TONN)	ASPHALT CONCRETE (TYPE B) * (N) (TONN)	PLACE AC (MISC AREA) (m2)	MINOR CONCRETE (MINOR STRUCTURE) (m3)	MINOR CONCRETE (MISC CONST) (m3)	TYPE I SAND FILTER BMP (EA)	TYPE II SAND FILTER BMP (EA)	MISCELLANEOUS IRON AND STEEL(F) (Kg)	(N) FRAMES GRATES & COVERS: MH FRAME AND COVER (EA)	CHECKERED PLATE (EA)	TYPE 600-12 (EA)	TYPE 900R (EA)	FLUMES: CUTTHROAT FLUME (EA)	PARSHALL FLUME (EA)	PALMER BOWLUS FLUME (EA)	900 mm RCP RISER (m)	COMPOST FILTER BMP (EA)	1200 mm RCP RISER (m)	(N) MONITORING MANHOLE (EA)	(N) STAINLESS STL MONITORING WELL (EA)	INFILTRATION TRENCH BMP (EA)	JS NO 2 (EA)	50 mm PLASTIC CONDUIT (m)	AP: 150 mm (m)	200 mm (m)	250 mm (m)	300 mm (m)	380 mm (m)	450 mm (m)	* (N) CL GATE (EA)	380 mm DIP (m)	BIO-FILTER SWALE BMP (M2)	BIO-FILTER STRIP BMP (M2)	(N) PIPE JOINT CLASSIFICATION (EA)	(N) HEIGHT OF INLET "H" OR "V" (m)	450 mm CSP (m)	(N) OVERFLOW WEIR (EA)	DESCRIPTION	NORTHING/EASTING (OR STATION)	DRAINAGE PLAN SHEET No	DRAINAGE SYSTEM No	DRAINAGE UNIT
3	a											1.63	1.77			148			1																							2.25			G2 INLET W/ DEPRESSED APRON	602424.049 / 1902243.455	3	3	a
	b																																				4.41								380mm AP	602434.259 / 1902236.540			b
	c												0.34			60.5		1					1			2.52	1															2.52			OCP MONITORING MH	602434.259 / 1902236.540			c
	d											0.3																																Conc COLLAR	602436.693 / 1902236.155			d
	e																																				29.83								380mm AP	602450.520 / 1902219.971			e
	f												0.29			51		1						2.06																		2.06			OCP W/ NO OPENING	602450.520 / 1902219.971			f
	g																																				6.7								380mm AP	602450.470 / 1902219.336			g
	h												0.29			51		1						2.48																		2.48			OCP W/ NO OPENING	602445.376 / 1902214.984			h
	i																																				1.92								380mm AP	602444.742 / 1902215.034			i
	j													1																															TYPE I SAND FILTER	602438.933 / 1902212.597			j
	k												0.35																																INLET Chnl TYPE I	602429.698 / 1902232.643			k
	l																				1																								CUTTHROAT FLUME	602428.118 / 1902234.492			l
	m																																																
	n												2.07																																INLET Chnl TYPE I	602428.118 / 1902234.492			n
	o	1	4.8																																										REMOVE Exist INLET	602422.643 / 1902239.996			o
	p												1.31																																OVERFLOW Chnl	602424.049 / 1902243.455			p
	q			37.7																																			4						CL FENCE W/GATES	602444.742 / 1902215.034			q
	r												0.60																																Conc PAD	602428.288 / 1902238.003			r
	s																															0.0													PLASTIC PIPE	602428.118 / 1902234.492			s
	t																															3.1													PLASTIC PIPE	602428.288 / 1902238.003			t
	u																																						10.0						450 mm CSP				u
													0.29			51		1						2.10																		2.10			OCP INLET				oo
4	a	1																																											REMOVE Exist GMP INLET	612648.116/1897216.213	4	4	a
	b					*							*																																RECONSTRUCT CURB	612647.974/1897215.402			b
	c											1.0	0.91			148			1																							0.89			TYPE GO INLET	612647.297/1897215.469			c
	d											0.30																																Conc COLLAR	612648.116/1897216.213			d
	e																																						1						450mm AP	612647.974/1897215.402			e
	f			33	33																																								RECONSTRUCT Exist CL FENCE	612647.974/1897215.402			f
	g					*							*																																RECONSTRUCT CURB	612647.297/1897215.469			g
	h																																	17.13											200mm AP	612647.297/1897215.469			h
	i					*							*																																RECONSTRUCT CURB	612633.001/1897225.429			i
	j																																						2.1						450mm AP	612633.001/1897225.429			j
	k											0.30																																Conc COLLAR	612634.129/1897227.129			k
	l					*							*																																RECONSTRUCT CURB	612634.129/1897227.129			l
	m	1																																											REMOVE Exist GMP INLET	612633.001/1897225.429			m
	n											1.06				148			1																							1.15			TYPE GO INLET	612632.189/1897225.474			n
	o																																		4.64										250mm AP	612632.303/1897225.474			o
	p											0.7				51			1				1	1.30			1															1.90			MONITORING MH	612626.349/1897224.968			p
	q																																		4.60										250mm AP	612632.303/1897225.474			q
	r													1																															TYPE I SAND FILTER	612617.126/1897225.783			r
	s																																				3.0								380mm AP	612609.436/1897229.622			s
	t												0.6																																Conc PAD	612604.595/1897238.557			t
	u											1.2				51			1				1	2.53			1															3.13			MONITORING MH	612605.436/1897229.622			u
	v																																				4.0								380mm AP	612604.431/1897230.318			v
	w												0.29			51		1						2.58																		2.58			OCP INLET	612602.376/1897231.741			w
	x																																										5.43		450mm CSP	612602.376/1897231.741			x
	y			29	29																																								RECONSTRUCT Exist CL FENCE				y
	z																														1														JS NO 2	612596.093/1897251.614			z
	aa								14.19	49.9																																			ACCESS ROAD				aa
	bb																															3.2													50mm PLASTIC PIPE	612626.349/1897224.968			bb
	cc												0.6																																Conc PAD	612626.746/1897228.294			cc
	dd																																																dd
	ee																															1.7													50mm PLASTIC PIPE	612607.537/1897228.167			ee
																																													450mm AP				ff
	hh	1	4.8																																										R&D Exist 450mm CSP&GO INLET	612605.544/1897225.289			hh
	ii																																						5.3						450mm AP	612605.544/1897225.289			ii
	jj											1.32				148			1																							0.90			GO INLET	612605.544/1897225.289			jj
	kk											1.38				148			1																							1.35			G3 INLET	612598.488/1897225.306			kk
	ll					*							*																																RECONSTRUCT Exist CURB	612598.488/1897225.306			ll
	mm			40.1																																			2						1.83 m HIGH CL FENCE	612605.544/1897225.289			mm
	nn												3.04																																Conc V-DITCH				nn
																																													SHEET TOTAL				

DATE ACCEPTED 8-20-99
DATE COMPLETED 8-20-99

AS BUILT
NO CORRECTIONS THIS SHEET
RESIDENT ENGINEER GARY CONKLIN-RBF & ASSOC

* PAY ITEM INCLUDED UNDER SUMMARY OF QUANTITIES, SHEET Q-1

DRAINAGE QUANTITIES D-34

DATE	REVISED BY	DATE REVISED
CALCULATED/ DESIGNED BY		CHECKED BY

PROJECT ENGINEER

07 JUN 2000 5:27:33 q:\57704\34358\dgn\asbuilts\asbuilts without rev shown\d34.div

TIME PLOTTED => $$$$$$$SYTIME$$$$$$$

LAST REVISION 00-00-00

FOR REDUCED PLANS ORIGINAL SCALE IS IN MILLIMETERS 0 20 40 60 80

USERNAME => $$$$$$USER$$$$$$
$$$$$$$$$$$$$$DGNSPEC$$$$$$$$$$$$$$$$$

CU 00000

CONTRACT NO 430004A

DIST	COUNTY	ROUTE	KILOMETER POST TOTAL PROJECT	SHEET No	TOTAL SHEETS
11	SD	var	var	55	60

REGISTERED CIVIL ENGINEER

PLANS APPROVAL DATE

REGISTERED PROFESSIONAL ENGINEER ERWIN FOGERSON NO. 049060 EXP. 9-30-99 CIVIL STATE OF CALIFORNIA

AGUILAR ENGINEERING INCORPORATED
937 SOUTH VIA LATA, SUITE 500
COLTON, CA 92324

SUMMARY OF QUANTITIES

LOCATION NO	LOCATION	REMOVE CONCRETE (CURB)	REMOVE CONCRETE (GUTTER)	REMOVE AC CURB / DIKE	REMOVE AC	REMOVE TREE (N)	REMOVE STOCKPILE (N)	REMOVE FENCE	ASPHALT CONCRETE DIKE	MINOR CONCRETE (Misc Const)	AGGEGATE BASE (CLASS II)	ASPHALT CONCRETE (CLASS B)	CL GATE	CL FENCE	RELOCATE IRRIGATION SYSTEM
		m	m2	m	m2	EA	EA	m	m	m3	TONN	TONN	EA	m	EA
1	KEARNY MESA MAINTENANCE STATION		*		*						*	*			
2	ESCONDIDO MAINTENANCE STATION			*	*						*	*			
3	LA COSTA PARK AND RIDE			44	423	2			48.93		153.14	91.10	4	37.7	
4	I5 / SR78 PARK AND RIDE	11.94			*				41		0.7	49.9	4	85	1
5	SR78 / MELROSE DRIVE				*			10.4	32.3		14.9	4.6	2		
~~6~~	~~I5 / PALOMAR AIRPORT ROAD~~										~~119.3~~	~~64.1~~			~~1~~
7	CARLSBAD MAINTENANCE STATION	71.80	74.64	1,528	1031.52	1	1		0	17.5	975.59	521.41			
	TOTAL														

* NOT A SEPARATE PAY ITEM FOR THIS LOCATION, SEE SPECIAL PROVISIONS

ELIMINATED FROM CONTRACT SEE CALTRANS CONTRACT NO. 11-059104, CCO NO. 8

SUMMARY OF QUANTITIES

Q-1

DATE	REVISED BY
	DATE REVISED

CALCULATED/DESIGNED BY
CHECKED BY
PROJECT ENGINEER

07 JUN 2000 5:31:56 q:\57704\34358\dgn\asbuilts\asbuilts without rev shown\q01.div

LAST REVISION 00-00-00
DATE PLOTTED => $DATE
TIME PLOTTED => $TIME

FOR REDUCED PLANS ORIGINAL SCALE IS IN MILLIMETERS 0 20 40 60 80

USERNAME => $USER
DGN FILE => $REQUEST

CU 00000

CONTRACT NO 430004A

DIST	COUNTY	ROUTE	KILOMETER POST TOTAL PROJECT	SHEET No	TOTAL SHEETS
11	SD	var	var	57	60

REGISTERED ELECTRICAL ENGINEER

PLANS APPROVAL DATE

REGISTERED PROFESSIONAL ENGINEER ARTURO T. BARRENO No. 11600 Exp. 9-30-00 ELECTRICAL STATE OF CALIFORNIA

AGUILAR ENGINEERING INCORPORATED
937 SOUTH VIA LATA, SUITE 500
COLTON, CA 92324

LOAD SCHEDULE

PANEL PPA IN NEMA 3R ENCL. 120/240 VOLTS 1 PH 3 WIRE 10KAIC

LOCATION OUTDOOR 125 AMPS BUS 40AT,2P MAIN SURFACE MOUNTED

REMARKS	LOAD (WATTS) L1	LOAD (WATTS) L2	OUTLETS OTHER	OUTLETS REC	OUTLETS LTG	CIR NO	ALL BREAKERS 20 AMPERES EXCEPT AS NOTED	CIR NO	OUTLETS LTG	OUTLETS REC	OUTLETS OTHER	LOAD (WATTS) L1	LOAD (WATTS) L2	REMARKS
ONFLOW MON.	1800					1		2				-		SPARE
INFLOW MON.		1800				3		4					-	SPARE
	1800	1800										-	-	

= 1 POLE
= 2 POLE

TOTAL CONNECTED LOAD 1800VA(L1) 1800VA(L2) = 3600VA
@120/240V, 1Ø = 15.0AMPS

NOTES:

1. Exist TYPE III SERVICE ENCLOSURE CABINET S.D.G.&E. METER NO. 510146, 120/240V, 1Ø WITH: 2P-100A CB (MAIN) ADD: 2P-40A CB (FOR PNL PPA)
2. NEW PNL BOARD PPA IN NEMA 3R ENCLOSURE
   (1) 2P-40A CB (MAIN)
   (1) 1P-20A CB (ONFLOW MON.)
   (1) 1P-20A CB (INFLOW MON.)
   (2) 1P-20A CB (SPARE)

CONDUIT & WIRE NOTES:

1. 4IC, TYPE 3, 3#6 L=130m (426') VD=2.61%
2. 4IC, TYPE 3, 2#10 L=9m (82') VD=2.4%

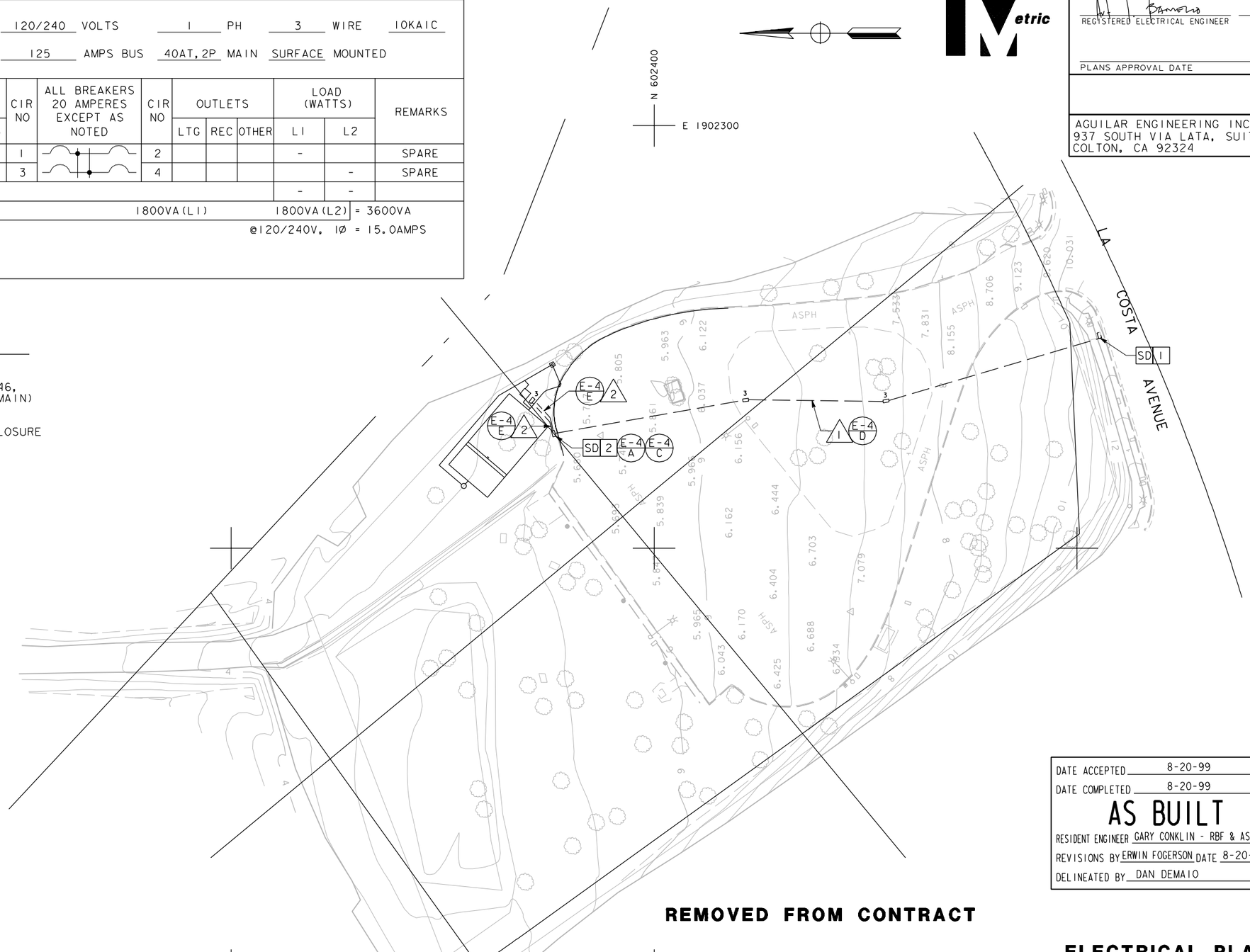

N 602600
E 1902100

REMOVED FROM CONTRACT

DATE ACCEPTED 8-20-99
DATE COMPLETED 8-20-99

AS BUILT

RESIDENT ENGINEER GARY CONKLIN - RBF & ASSOC
REVISIONS BY ERWIN FOGERSON DATE 8-20-99
DELINEATED BY DAN DEMAIO

ELECTRICAL PLAN LOCATION 3

SCALE 1 : 500

LA COSTA AVE PARK AND RIDE

NOTE : THIS PLAN ACCURATE FOR ELECTRICAL WORK ONLY.

E-2

REVISED BY | DATE | DATE REVISED
CALCULATED/DESIGNED BY | CHECKED BY
PROJECT ENGINEER

07 JUN 2000 5:28:48 q:\57704\34358\dgn\asbuilts\asbuilts without rev shown\e02.dlv

LAST REVISION 00-00-00 | DATE PLOTTED => $DATE | TIME PLOTTED => $TIME

FOR REDUCED PLANS ORIGINAL SCALE IS IN MILLIMETERS 0 20 40 60 80

USERNAME => $USER
DGN FILE => $REQUEST

CU 00000

CONTRACT NO 430004A

DIST	COUNTY	ROUTE	KILOMETER POST TOTAL PROJECT	SHEET No	TOTAL SHEETS
11	SD	var	var	59	60

REGISTERED ELECTRICAL ENGINEER

PLANS APPROVAL DATE

REGISTERED PROFESSIONAL ENGINEER ARTURO T. BARRENO No. 11600 Exp. 9-30-00 ELECTRICAL STATE OF CALIFORNIA

AGUILAR ENGINEERING INCORPORATED
937 SOUTH VIA LATA, SUITE 500
COLTON, CA 92324

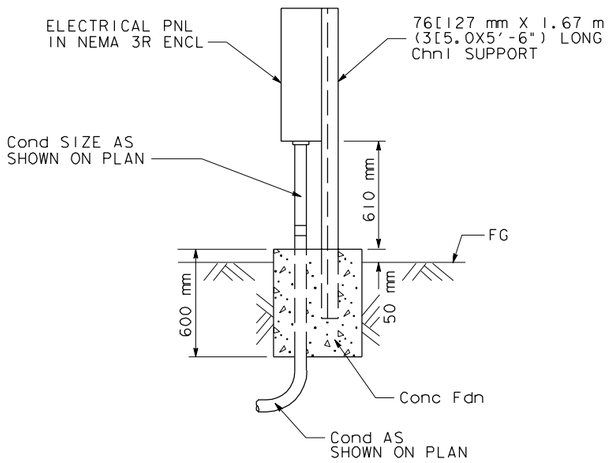

A ELECTRICAL PANEL MOUNTING SUPPORT

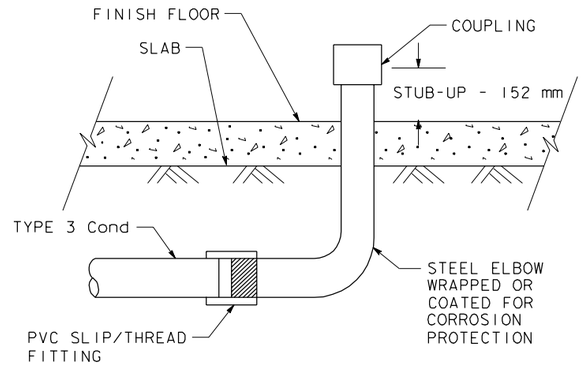

C STEEL ELBOW THRU FLOOR DETAIL

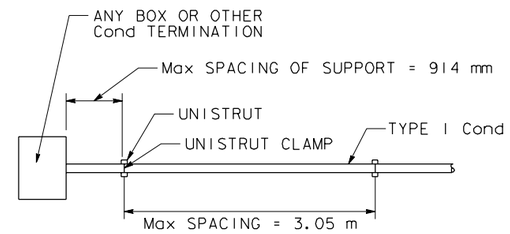

F SUPPORT SPACING TO STRUCTURAL MEMBERS

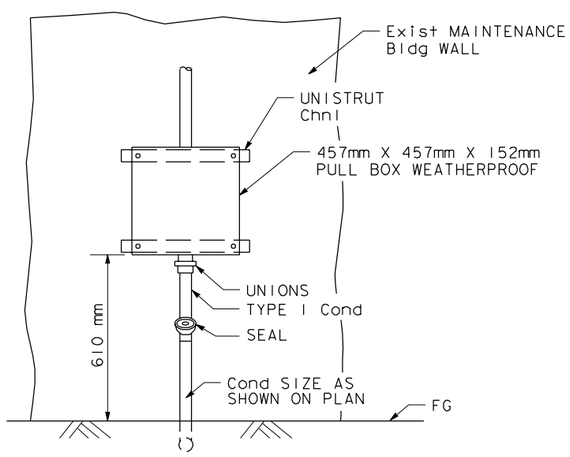

B PULL BOX MOUNTING DETAIL

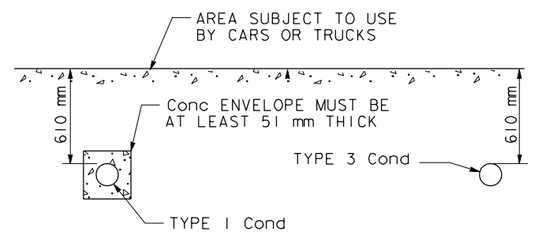

D TYPICAL UNDERGROUND CONDUIT INSTALLATION

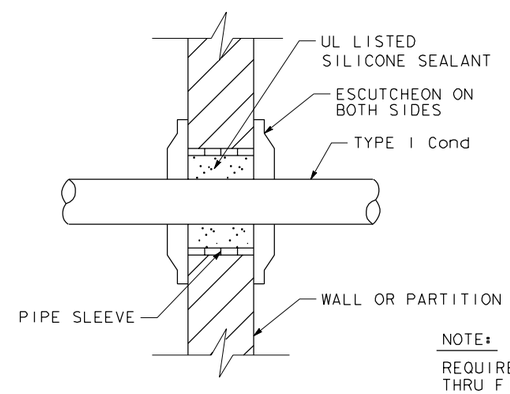

NOTE:
REQUIRED FOR ALL PENETRATION THRU FIRE RATED WALLS

G FIRE STOP DETAIL

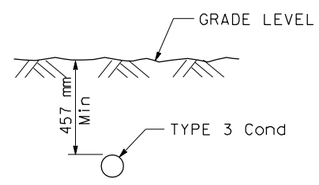

E TYPICAL UNDERGROUND CONDUIT INSTALLATION (UNPAVED AREA)

PULL BOX NOTES:

1. EQUIP METAL PULL BOX EXPOSED TO WEATHER WITH WEATHER PROOF REMOVBLE COVER.
2. USE THREADED WATERTIGHT HUBS FOR TOP ENTRY.
3. USE KNOCKOUT FOR BOTTOM ENTRY ONLY.

DATE ACCEPTED 8-20-99
DATE COMPLETED 8-20-99
AS BUILT
NO CORRECTIONS THIS SHEET
RESIDENT ENGINEER GARY CONKLIN-RBF & ASSOC

ELECTRICAL DETAILS

NO SCALE

E-4

NOTE : THIS PLAN ACCURATE FOR ELECTRICAL WORK ONLY.

DATE	REVISED BY	DATE REVISED
CALCULATED/DESIGNED BY		
CHECKED BY		

PROJECT ENGINEER

07 JUN 2000 5:29:29 q:\57704\34358\dgn\asbuilts\asbuilts without rev shown\e04.dlv

LAST REVISION 00-00-00 DATE PLOTTED => $DATE TIME PLOTTED => $TIME

FOR REDUCED PLANS ORIGINAL SCALE IS IN MILLIMETERS 0 20 40 60 80

USERNAME => $USER
DGN FILE => $REQUEST

CU 00000

CONTRACT NO 430004A