A.1 REQUIRED MINIMUM DESIGN ELEMENTS FOR STORM WATER CONTROL

The PE must consider, and as appropriate, incorporate certain Design Pollution Prevention Best Management Practices (BMPs) into a project to minimize impacts to water quality. These BMPs were developed in response to the three following design objectives:

- *Prevent Downstream Erosion:* Stormwater drainage systems will be designed to avoid causing or contributing to downstream erosion;
- *Stabilize Disturbed Soil Areas:* Disturbed soil areas will be appropriately stabilized to prevent erosion after construction; and
- *Maximize Vegetated Surfaces Consistent with Existing Caltrans Policies:* Vegetated surfaces prevent erosion and promote infiltration (which reduces runoff).

The Design Pollution Prevention BMPs listed in Table A-1 and described in the following sections are designed to accomplish these objectives.

Table A-1. Design Pollution Prevention BMPs
Consideration of Downstream Effects Related to Potentially Increased Flow
Peak Flow Attenuation Devices
Reduction of Paved Area (i.e. increase pervious area)
Soil Modification
Energy Dissipation Devices
Preservation of Existing Vegetation
Concentrated Flow Conveyance Systems
Ditches, Berms, Dikes, and Swales
Overside Drains, Downdrains, Paved Spillways
Channel Lining
Flared Culvert End Sections
Outlet Protection/Velocity Dissipation Devices
Slope/Surface Protection Systems
Vegetated Surfaces
Slope Roughening/Terracing/Rounding/Stepping
Hard Surfaces

A.2 CONSIDERATION OF DOWNSTREAM EFFECTS RELATED TO POTENTIALLY INCREASED FLOW

Description:

Changes in the velocity or volume of runoff, the sediment load, or other hydraulic changes from stream encroachments, crossings, or realignment may affect downstream channel stability. An estimate of the runoff coefficient of the construction site before and after construction can be found in the Drainage Report (described in HDM, Section 800).

Caltrans will evaluate the effects of the potentially increased flow on the downstream channel stability including a comparison of post-construction velocities and volumes to the erodibility of downstream soils, the potential for increased downstream flooding (due to stream channel erosion), and the possibility of downstream habitat degradation. The applicability of the mitigation measures described under Implementation for this BMP will then be evaluated. .

Appropriate Applications:

During the design of both new and reconstructed facilities, Caltrans may include new road surfaces or additional surface paving to enhance the operational safety and functionality of the facility. The PE must also consider the effect of collecting and concentrating flows in roadside ditches, storm drain systems, or the effect of re-directing flows to Treatment BMPs. Diversions or overflows from large storm events in these instances may create concentrated discharges in areas that have not historically received these flows.

Implementation:

If these changes result in an increased potential for downstream effects in channels, Caltrans will consider the following:

- Reduction of total paved area.
- Modifications to channel lining materials (both natural and man-made), including vegetation, geotextile mats, rock, and riprap;
- Energy dissipation devices at culvert outlets;
- Smoothing the transition between culvert outlets/headwalls/wingwalls and channels to reduce turbulence and scour;
- Incorporating peak flow attenuation facilities into designs to reduce peak discharges; and
- Modifications to site soils to improve infiltration.
- LID measures and sustainable infrastructure, as defined in Section 2.4.

Caltrans will implement appropriate measures to ensure that runoff from Caltrans facilities will not significantly increase downstream effects.

A.3 PRESERVATION OF EXISTING VEGETATION

Description:

Preservation of existing vegetation involves the identification and protection of desirable vegetation that provides erosion and sediment control benefits. This BMP can also be considered a LID technique when area is used to attenuate runoff.

Appropriate Applications:

Caltrans will preserve existing vegetation at areas on a site where no construction activity is planned or will occur at a later date.

Implementation:

The following general steps should be taken to preserve existing vegetation:

- Identify and delineate in contract documents all vegetation to be retained;
- Delineate the areas to be preserved in the field prior to the start of soil-disturbing activities;
- Minimize disturbed areas by locating temporary roadways to avoid stands of trees and shrubs and to follow existing contours to reduce cutting and filling; and
- When removing vegetation, consider impacts (increased exposure or wind damage) to the adjacent vegetation that will be preserved.

A.4 CONCENTRATED FLOW CONVEYANCE SYSTEMS

Concentrated flow conveyance systems consist of permanent design measures that are used alone or in combination to intercept and divert surface flows, and convey and discharge concentrated flows with a minimum of soil erosion. Concentrated flow conveyance systems may be used both within Caltrans rights-of-way (on-site) and downstream outside Caltrans rights-of-way.

Ditches, Berms, Dikes, and Swales

Description:

These are permanent devices typically used to intercept and direct surface runoff to an overside (or slope) drain or stabilized watercourse.

Appropriate Applications:

Ditches, berms, dikes, and swales are typically implemented:

- At the top of slopes to divert run-on from adjacent slopes and areas;
- At bottom and mid-slope locations to intercept sheet flow and convey concentrated flows;
- At other locations to convey runoff to overside drains, stabilized watercourses, and stormwater drainage system inlets (catch basins), pipes, and channels;
- To intercept runoff from paved surfaces; or
- Along roadways and facilities subject to flooding.

Implementation:

- Design must be in accordance with Chapter 800 of the Highway Design Manual (see Topics 813, 834.3, and 835 and Chapter 860);
- Select design flow based on careful evaluation of risks due to erosion, overtopping, flow backups or washout;
- Consider outlet protection where localized scour is anticipated;
- Examine the site for run-on from off-site sources;
- Consider order of work provisions to install and utilize permanent dikes, swales, and ditches early in the construction process;
- Conveyances must be lined when velocities exceed allowable limits for soil (see Table 862.2 of the Highway Design Manual). Consider use of Rock Slope Protection (RSP), engineering fabric, vegetation, asphalt concrete or concrete (see Table 873.3E of the Highway Design Manual);
- Riprap should not be used where there is a high probability that traction sand or abrasives may enter the channel; and
- Ditches, berms, dikes, and swales are shown in Figure A-1.

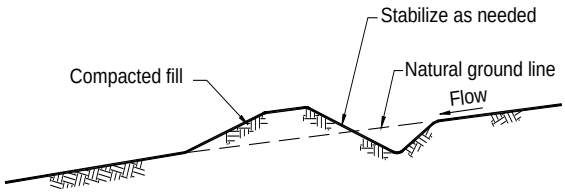

Conceptual Diversion Ditch/Drainage Swale
Not to Scale

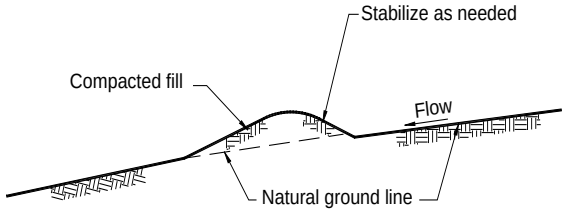

Conceptual Diversion Dike/Berm
Not to Scale

Figure A-1. Ditches, Berms, Dikes, and Swales

Note: Actual layout determined by design.

Overside Drains

Description:

Overside drains are conveyance systems used to protect slopes against erosion. Overside Drains may take the form of pipe downdrains, flumes or paved spillways, and protect slopes against erosion by collecting surface runoff from the roadbed, the tops of cuts or from benches in cut or fill slopes, and conveying it down the slope to a stabilized drainage ditch or area.

Appropriate Applications:

Overside drains are typically used at sites where slopes may be eroded by surface runoff.

Implementation:

- Design must be in accordance with Chapter 830 of the Highway Design manual (see Topic 834.4);
- Pipe downdrains are metal pipes adaptable to any slope. They are recommended where side slopes are 4:1 (h:v) or steeper;
- Flume downdrains are rectangular corrugated metal flumes with a tapered entrance. They are best adapted for low flow rates on slopes that are 2:1 (h:v) or flatter;
- Pipe and flume downdrains shall be securely anchored to the slope;
- Paved spillways are recommended on side slopes flatter than 4:1 (h:v). On steeper slopes, pipe downdrains should be used; and
- Drainage from benches in cut and fill slopes should be removed at intervals ranging from 300 to 500 feet.

An overside drain is shown in the Standard Plans, May 2006, Figure D87D.

Flared Culvert End Sections

Description:

These are devices typically placed at inlets and outlets of pipes and channels to improve the hydraulic operation, retain the embankment near pipe conveyances, and to help prevent scour and minimize erosion at these inlets and outlets.

Appropriate Applications:

Use flared culvert end sections at outlets and inlets of overside drains and culverts.

Implementation:

- Design must be in accordance with Chapter 800 of the Highway Design Manual (see Topics 823 through 827); and
- Use with other outlet protection/velocity dissipation devices as appropriate.

A flared culvert end section is shown in Figure A-2 (see Standard Plans, May 2006, Figures D94A and D94B, Pages 181 and 182).

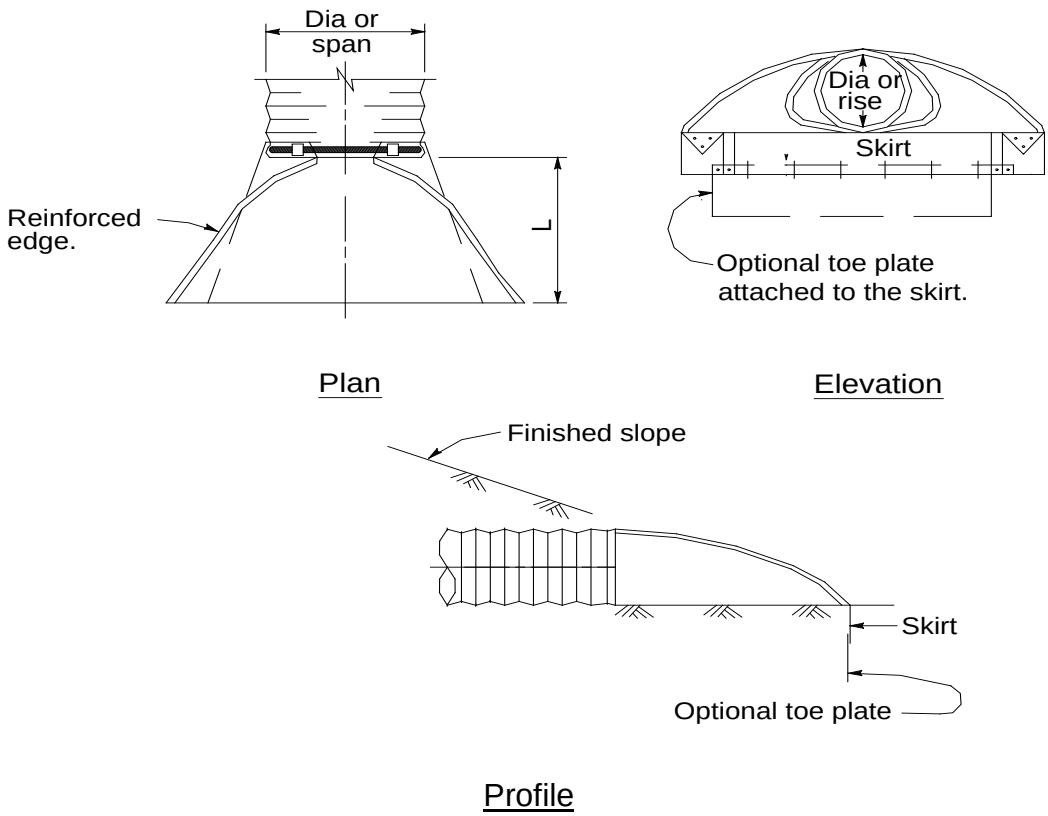

Figure A-2. Flared Culvert End Section

Outlet Protection/Velocity Dissipation Devices

Description:

These devices are typically placed at pipe outlets to prevent scour and reduce the outlet velocity and/or energy of exiting stormwater flows.

Appropriate Applications:

These devices are typically used at the outlets of pipes, drains, culverts, slope drains, diversion ditches, swales, conduits or channels, where localized scouring is anticipated.

Implementation:

- Design must be in accordance with Chapter 800 of the Highway Design Manual (see Topic 827 and Chapter 870);
- Install riprap, grouted riprap, or concrete apron at selected outlet;
- Apron length (L) is related to outlet flow rate and tailwater level; and
- For proper operation of apron, align apron with receiving stream and keep straight throughout its length.

An outlet protection/velocity dissipation device is shown in Figure A-3.

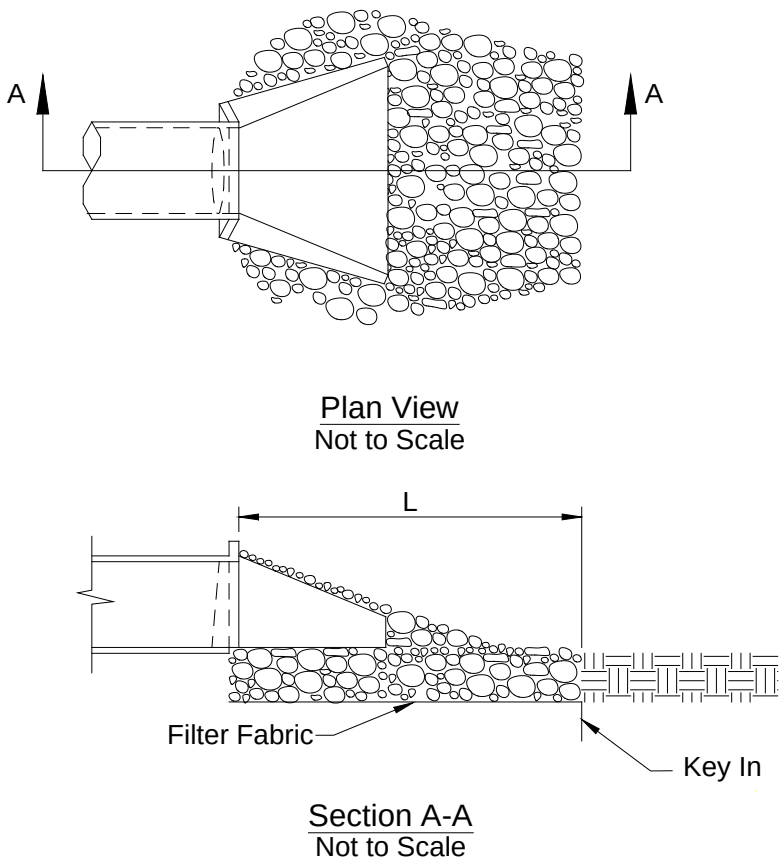

Figure A-3. Outlet Protection/Velocity Dissipation Device

A.5 SLOPE/SURFACE PROTECTION SYSTEMS

Surface protection consists of permanent design measures that are used alone or in combination to minimize erosion from completed, yet unvegetated (bare) surfaces. Vegetated surfaces may offer several advantages to paved surfaces, including lower runoff volumes and slower runoff velocities, increased times of concentration, and lower cost.

However, where site or slope-specific conditions would prevent adequate establishment and maintenance of a vegetative cover, hard surfacing should be considered.

Vegetated Surfaces

Description:

Vegetated surfaces should consist predominantly of established native grasses and mixed shrubs. The purpose of a vegetated surface (from a water quality perspective) is to prevent surface erosion that can cause downstream pollution. Vegetated surfaces may additionally improve infiltration which removes sediment and may reduce pollutants in stormwater and non-stormwater runoff.

Appropriate Applications:

Vegetated surfaces should be established on disturbed soil areas after construction activities in that area are completed, and after the slope has been prepared. Vegetated surfaces should only be considered for areas that can support the selected vegetation long-term.

Implementation:

The following approach is typically implemented by the District Landscape Architect:

- An evaluation of the site is done to determine the appropriate vegetation and planting strategy. In general, the site evaluation considers soil type and nutrient condition, site topography, climate and season, types of appropriate native and adapted vegetation suitable for the site, and maintenance;
- Vegetated surfaces are designed to provide short and long term protection of the disturbed soil areas. Vegetation will minimize overland and concentrated flow depths and velocities, and maximize contact time between water and vegetated surfaces. This will enhance infiltration and pollutant removal opportunities;
- When determined feasible, existing topsoil and vegetation is harvested and stockpiled during construction. Stockpiled materials are used to prepare disturbed soil areas prior to seeding operations; and
- When topsoil and vegetation are not available, compost and mulch are a desired option. They promote seed germination and plant growth and provide surface protection.

Slope Roughening/Terracing/Rounding/Stepping:

Description:

A rough surface can be added to a slope by various methods all of which run parallel to the slope contour over the entire face of the slope. The purpose of slope roughening is to

prevent surface erosion that can cause downstream pollution by reducing the velocity of surface runoff. This BMP can also be considered a LID technique.

Appropriate Applications:

Slope roughening should be established on disturbed soil areas after construction activities in that area are completed and prior to application of topsoil, where applicable. The method of slope roughening should be determined after consideration of the steepness of the slope, the type of slope, soil characteristics, and future maintenance requirements.

Implementation:

- Roughening and terracing are techniques for creating furrows, terraces, serrations, stair-steps, or track-marks on the soil surface. These treatments increase adhesion of erosion control materials and improve vegetation establishment.
- Slope rounding is used to minimize the formation of concentrated flows; and
- Use on embankment or cut slopes, prior to the application of temporary or permanent erosion control.

Slope roughening, terracing, rounding, and stepping, should be implemented as shown in Figure A-4.

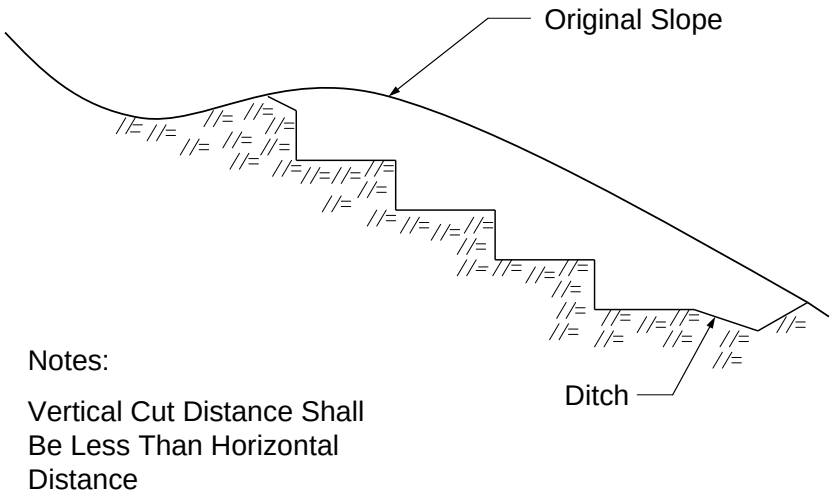

Stepped Slope (Not to Scale)

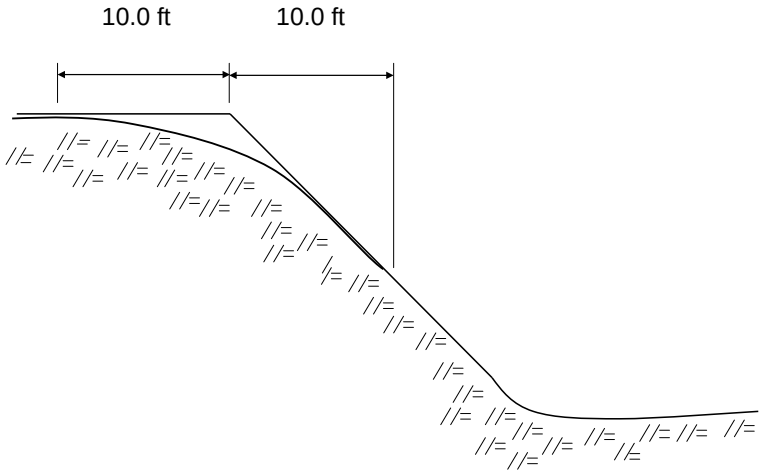

Slope Rounding

Figure A-4. Slope Rounding, Stepping, Terracing, and Contouring

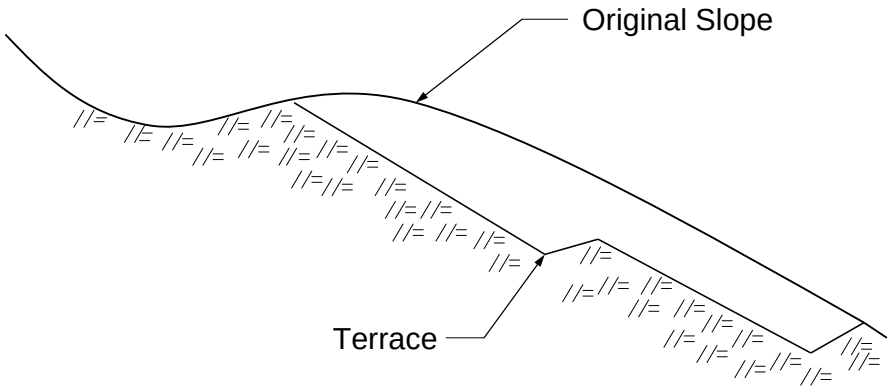

Terraced Slope (Not to Scale)

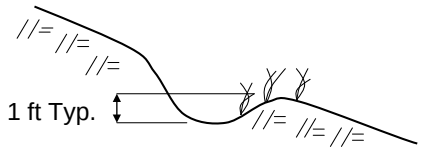

Furrow Detail

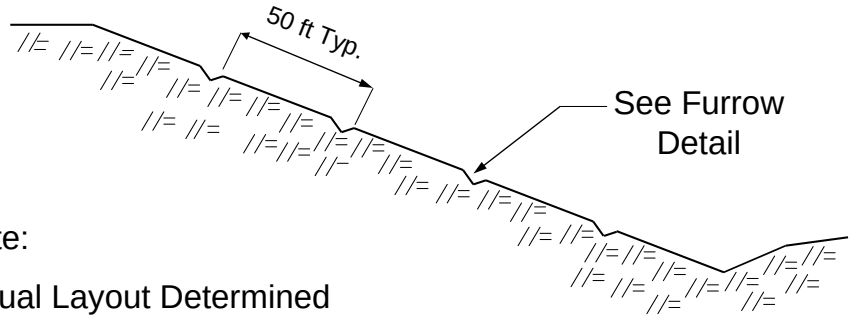

Note:

Actual Layout Determined by Design

Contour Furrows (Not to Scale)

Figure A-4. Slope Rounding, Stepping, Terracing, and Contouring (Continued)

Hard Surfaces

Description:

Hard surfaces consist of placing concrete, rock, or rock and mortar slope protection. The PE needs to consider the effects of increased runoff from impervious areas.

Appropriate Applications:

Apply on disturbed soil areas where vegetation would not provide adequate erosion protection. Hard surfaces are also considered where it is difficult to maintain vegetation.

Implementation:

- Rock Slope Protection (RSP) (See the California Bank and Shore Rock Slope Protection Design Manual. Web site: http://www.dot.ca.gov/hq/oppd/hydrology/hydroidx.htm)
  - Angular rock of specified size is placed over fabric and used as rip rap to armor slopes, streambanks, etc.;
  - RSP consists of placing revetment-type rock courses;
  - Remove loose, sharp, or extraneous material from the slope to be treated;
  - Place underlayment fabric loosely over the surface so that the fabric conforms to the surface without damage. Equipment or vehicles should not be driven directly on the fabric;
  - Excavate a footing trench along the toe of the slope; and
  - Local surface irregularities should not vary from the planned slope by more than 1.0 feet (ft) as measured at right angles to the slope.
- Concreted RSP:
  - Angular rock of specified size is placed over fabric;
  - Concrete is placed into the rock interstices by gravity flow and a minimum of brushing and troweling; and
  - Used to armor streambanks.
- Rock Blanket:
  - Consists of round cobble rock placed as a landscape feature in areas often inundated with water.
- Sacked Concrete Slope Protection:
  - Bags are filled with concrete mix and stacked against the slope to cure. Rebar can be driven into the wet mix and bags.
  - Used to create revetment or bank protection. (This is aesthetically less desirable.)

- Slope Paving:
  - Used almost exclusively below bridge decks at abutments.
  - Provides erosion control and soil stabilization in areas too dark for vegetation to establish.
  - May be constructed of finish poured Portland Cement Concrete (PCC), shotcrete, or masonry paving units.
  - Foundation areas should be evenly graded and thoroughly compacted, with moisture sufficient to allow a firm foundation and to prevent absorption of water from the concrete or mortar. Work should be scheduled so that the work (including placing, finishing, and application of curing compound) between timber borders is started and completed in the same day. There should not be any construction joints between timber spacers.
- Articulated Revetments:
  - Mattresses composed of concrete units that are interlocked or interconnected with cables.
- Gabions:
  - Wire cages filled with rock. These units are then constructed into structures of various configurations.

A.6 TREATMENT BENEFITS OF DESIGN POLLUTION PREVENTION BMPS

Several Design Pollution Prevention BMPs also provide treatment benefits. Table A-3 below shows the inherent treatment benefits of some commonly used Design Pollution Prevention BMPs.

Table A-3. Treatment Benefits Of Commonly Used Design Pollution Prevention BMPs

Commonly Used Design Pollution Prevention BMP	*Inherent Treatment Benefit*
Vegetated Surface - Permanent Erosion Control	Reduce runoff velocities and the amount of sediment in downstream flow, as well as infiltration
Peak Flow Attenuation Devices	Hydrograph Matching