CRASH TESTING OF VARIOUS TEXTURED BARRIERS

STATE OF CALIFORNIA

DEPARTMENT OF TRANSPORTATION
ENGINEERING SERVICES
MATERIALS ENGINEERING AND TESTING SERVICES

Supervised by ..... Dan Speer, P.E.

Principal Investigator ..... Rich Peter, P.E.

Report Prepared by ..... Michael White, P.E. and John Jewell, P.E.

Research Performed by ..... Roadside Safety Technology Branch

September 2002

STATE OF CALIFORNIA

DEPARTMENT OF TRANSPORTATION
ENGINEERING SERVICE CENTER
MATERIALS ENGINEERING AND TESTING SERVICES

CRASH TESTING OF VARIOUS TEXTURED BARRIERS

Supervised by ..... Dan Speer, P.E.

Principal Investigator ..... Rich Peter, P.E.

Report Prepared by.....Michael White, P.E. and John Jewell, P.E.

Research Performed by .....Roadside Safety Technology Branch

Daniel Speer, P.E.
Chief
Office of Structural Materials

Rich Peter, P.E.
Chief
Roadside Safety Technology Branch

Phil Stolarski
Deputy Division Chief
Materials Engineering and Testing Services

TECHNICAL REPORT STANDARD TITLE PAGE

1. REPORT NO. **FHWA/CA/TL-2002/03**	2. GOVERNMENT ACCESSION NO.	3. RECIPIENT'S CATALOG NO.
4. TITLE AND SUBTITLE **CRASH TESTING OF VARIOUS TEXTURED BARRIERS**		5. REPORT DATE September, 2002 6. PERFORMING ORGANIZATION CODE
7. AUTHOR(S) Michael White, John Jewell, Rich Peter		8. PERFORMING ORGANIZATION REPORT NO. 65-680445
9. PERFORMING ORGANIZATION NAME AND ADDRESS Materials Engineering and Testing Services California Department of Transportation 5900 Folsom Blvd., Sacramento, CA. 95819		10. WORK UNIT NO. 11. CONTRACT OR GRANT NO. F2001TL17
12. SPONSORING AGENCY NAME AND ADDRESS California Department of Transportation 5900 Folsom Blvd., Sacramento CA. 95819		13. TYPE OF REPORT & PERIOD COVERED FINAL 14. SPONSORING AGENCY CODE

15. SUPPLEMENTARY NOTES

This project was performed in cooperation with the US Department of Transportation, Federal Highway Administration, under the research project titled "CRASH TESTING OF VARIOUS TEXTURED BARRIERS."

16. ABSTRACT

Eight crash tests were conducted on seven different patterns of textured barriers. The test articles had the following textured surfaces: a deep cobblestone (extending to the grade line), a 19-mm deep fluted rib angled to 45°, a "Mission Arch", a "Cobble Reveal" (deep cobblestone top section with a 610 mm band of light sandblast along the bottom), a Drystack stone, a Stone Ground Fractured Granite, and a shallow cobblestone. All test articles had a "base" profile similar to that of a Type 60 concrete barrier. The deep cobblestone, fluted rib at 45°, and Mission Arch barriers were 1220 mm high while all others were 1422 mm high.

All testing was completed under National Cooperative Highway Research Program Report 350 Test Level 3 guidelines with 2000-kg pickup trucks and 820-kg passenger vehicles. The results of all tests (pass or fail) were used to develop a set of guidelines that may be used to judge the crashworthiness of future design submissions.

The Mission Arch, Cobble Reveal, Drystack, and Stone Ground Fractured Granite textures as tested in this report are recommended for approval on California highways requiring TL-3 longitudinal barriers. The deep cobblestone, shallow cobblestone, and fluted ribs at a 45° are not recommended.

17. KEY WORDS Barriers, Median Barriers, Crash Test, Textured, Concrete, Vehicle Impact Test, Single Slope, Type 60		18. DISTRIBUTION STATEMENT No Restrictions. This document is available through the National Technical Information Service, Springfield, VA 22161	
19. SECURITY CLASSIF. (OF THIS REPORT) Unclassified	20. SECURITY CLASSIF. (OF THIS PAGE) Unclassified	21. NO. OF PAGES 126	22. PRICE

NOTICE

The contents of this report reflect the views of Materials Engineering and Testing Services, which is responsible for the facts and the accuracy of the data presented herein. The contents do not necessarily reflect the official views or policies of the State of California or the Federal Highway Administration. This report does not constitute a standard specification or regulation.

Neither the State of California nor the United States Government endorses products or manufacturers. Trade or manufacturers' names appear herein only because they are considered essential to the object of this document.

English to Metric System (SI) of Measurement

SI CONVERSION FACTORS

To Convert From	To	Multiply By
	ACCELERATION	
m/s^2	ft/s^2	3.281
	AREA	
m^2	ft^2	10.764
	ENERGY	
Joule (J)	$ft.lb_f$	0.7376
	FORCE	
Newton (N)	lb_f	0.2248
	LENGTH	
m	ft	3.281
m	in	39.37
cm	in	0.3937
mm	in	0.03937
	MASS	
kg	lb_m	2.205
	PRESSURE OR STRESS	
kPa	psi	0.1450
	VELOCITY	
km/h	mph	0.6214
m/s	ft/s	3.281
km/h	ft/s	0.9113
	VOLUME	
liters	gal	0.2642

ACKNOWLEDGMENTS

This work was accomplished in cooperation with the United States Department of Transportation, Federal Highway Administration.

Special appreciation is due to the following staff members of Materials Engineering and Testing Services (METS) and the Office of Research for their help on this project:

Michael White, John Jewell, Mike O'Keeffe, Erin McCrory, Larry Moore, Steve Hahn and Natane Clarke test preparation, data reduction, vehicle preparation, and film processing; Dave Bengel, Independent Camera Operator; Bob Cullen, Eric Jacobson, Ed Ung, Danny Callaway and Walt Winter, electronic instrumentation; Gene Weyel, Bill Poroshin and Mike Said, machine shop services.

Other persons from Caltrans who made important contributions include:

From the Headquarters and District Offices of Landscape Architecture - Bill Peach (D3), Tom Ham (D11), Gary Bush, Keith Robinson, Suzy Namba, and Jack Broadbent.

From Bridge Architecture - Javier Chavez and Bill Fleming

From the Division of Traffic Operations - Jesse Bhullar, Roy Peterson, and Ellis Hirst.

From the Division of Construction - Joy Pinne.

From METS - Don Fogle

From Headquarters Photography - Don Tateishi, Ed Andersen, and John Hirtz.

TABLE OF CONTENTS

TECHNICAL REPORT STANDARD TITLE PAGE ..... **i**
DISCLAIMER ..... **ii**
METRIC CONVERSION TABLE ..... **iii**
ACKNOWLEDGMENTS ..... **iv**
LIST OF FIGURES ..... **viii**
LIST OF TABLES ..... **xi**
1. INTRODUCTION **1**
1.1. Problem *1*
1.2. Objective *1*
1.3. Background And Significance Of Work *1*
1.4. Literature Search *2*
1.5. Scope *2*
2. TECHNICAL DISCUSSION **3**
2.1. Test Conditions - Crash Tests *3*
2.1.1. Test Facilities 3
2.1.2. Test Barrier Design and Construction 3
2.1.3. Concrete 5
2.1.4. Formliner Information 7
2.1.5. Test Vehicles 8
2.1.6. Data Acquisition System 9
2.2. Test Results - Crash Tests *9*
2.2.1. Test 581 9
2.2.1.1. Test 581 Impact Description 9
2.2.1.2. Test 581 Vehicle Damage 14
2.2.1.3. Test 581 Barrier Damage 14
2.2.2. Test 582 14
2.2.2.1. Test 582 Impact Description 14
2.2.2.2. Test 582 Vehicle Damage 20
2.2.2.3. Test 582 Barrier Damage 20
2.2.3. Test 583 20
2.2.3.1. Test 583 Impact Description 20
2.2.3.2. Test 583 Vehicle Damage 26
2.2.3.3. Test 583 Barrier Damage 27
2.2.4. Test 584 27
2.2.4.1. Test 584 Impact Description 27

2.2.4.2. Test 584 Vehicle Damage 32
2.2.4.3. Test 584 Barrier Damage 33
2.2.5. Test 585 33
2.2.5.1. Test 585 Impact Description 33
2.2.5.2. Test 585 Vehicle Damage 37
2.2.5.3. Test 585 Barrier Damage 38
2.2.6. Test 586 38
2.2.6.1. Test 586 Impact Description 38
2.2.7. Test 587 39
2.2.7.1. Test 587 Impact Description 39
2.2.7.2. Test 587 Vehicle Damage 43
2.2.7.3. Test 587 Barrier Damage 44
2.2.8. Test 588 44
2.2.8.1. Test 588 Impact Description 44
2.2.8.2. Test 588 Vehicle Damage 49
2.2.8.3. Test 588 Barrier Damage 50
2.2.9. Test 589 50
2.2.9.1. Test 589 Impact Description 50
2.2.9.2. Test 589 Vehicle Damage 55
2.2.9.3. Test 589 Barrier Damage 56
2.3. Discussion of Test Results - Crash Tests 57
2.3.1. General - Evaluation Methods (Tests 581 through 589) 57
2.3.2. Structural Adequacy 57
2.3.3. Occupant Risk 57
2.3.4. Vehicle Trajectory 57
2.3.5. Discussion of Individual Test Results 58
2.3.5.1. Test 581 58
2.3.5.2. Test 582 58
2.3.5.3. Test 583 58
2.3.5.4. Test 584 59
2.3.5.5. Test 585 59
2.3.5.6. Test 586 59
2.3.5.7. Test 587 59
2.3.5.8. Test 588 60
2.3.5.9. Test 589 60
2.3.5.10. General Results 60

3. CONCLUSION **70**
4. RECOMMENDATION **70**
4.1. Guidelines for architectural treatment of single-slope barriers. *70*
5. IMPLEMENTATION **71**
6. REFERENCES **72**
7. APPENDICES **73**
7.1. Test Vehicle Equipment *73*
7.2. Test Vehicle Guidance System *82*
7.3. Photo - Instrumentation *82*
7.4. Electronic Instrumentation and Data *85*

LIST OF FIGURES

Figure 2-1 Existing Type 60G barrier 4
Figure 2-2. Formwork ready for concrete placement 4
Figure 2-3. Formwork bracing for the 1220 mm high barriers 5
Figure 2-4 Test vehicle for Test 581 10
Figure 2-5 Test vehicle after Test 581 11
Figure 2-6. Left front corner of test vehicle after Test 581 11
Figure 2-7 Cobble pattern test article prior to Test 581 12
Figure 2-8 Cobble pattern test article after Test 581 12
Figure 2-9 Impact sequence and diagram for Test 581 13
Figure 2-10 Test vehicle prior to Test 582 15
Figure 2-11 Test vehicle and test article prior to Test 582 16
Figure 2-12 Test vehicle 582 during the Test 16
Figure 2-13 Test vehicle after Test 582 17
Figure 2-14 Test article after Test 582 18
Figure 2-15 Test article after Test 582 18
Figure 2-16 Impact sequence and diagram for Test 582 19
Figure 2-17 Test vehicle prior to Test 583 21
Figure 2-18 Test vehicle and test article prior to Test 583 22
Figure 2-19 Test vehicle 583 during the Test 22
Figure 2-20 Test vehicle after Test 583 23
Figure 2-21 Test article after Test 583 (downstream of impact point) 24
Figure 2-22 Test article after Test 583 (at impact point) 24
Figure 2-23 Impact sequence and diagram for Test 583 25
Figure 2-24 Vehicle floorboard deformation after Test 583 26
Figure 2-25 Test vehicle prior to Test 584 28
Figure 2-26 Test vehicle and test article prior to Test 584 28
Figure 2-27 Test vehicle 584 during the Test 29
Figure 2-28 Test vehicle after Test 584 29
Figure 2-29 Test article after Test 584 30
Figure 2-30 Test article after Test 584 30
Figure 2-31 Impact sequence and diagram for Test 584 31
Figure 2-32 Test 584 vehicle floorboard deformation 32
Figure 2-33 Test vehicle for Test 585 34
Figure 2-34 Test vehicle after Test 585 34
Figure 2-35 Cobble-Reveal test article prior to Test 585 35

Figure 2-36 Cobble-Reveal test article after Test 585 35
Figure 2-37 Impact sequence and diagram for Test 585 36
Figure 2-38 Interior and floorboard of test vehicle prior to Test 585 37
Figure 2-39 Floorboard of test vehicle after Test 585 38
Figure 2-40 Test 587 at impact 39
Figure 2-41 Test vehicle for Test 587 40
Figure 2-42 Test vehicle after Test 587 40
Figure 2-43 Drystack test article prior to Test 587 41
Figure 2-44 Drystack test article after Test 587 41
Figure 2-45 Impact sequence and diagram for Test 587 42
Figure 2-46 Vehicle floorboard prior to Test 587 43
Figure 2-47 Vehicle floorboard after Test 587 44
Figure 2-48 Test 588 at impact 45
Figure 2-49 Test vehicle for Test 588 46
Figure 2-50 Test vehicle after Test 588 46
Figure 2-51 Fractured Granite test article prior to Test 588 47
Figure 2-52 Fractured Granite test article after Test 588 47
Figure 2-53 Impact sequence and diagram for Test 588 48
Figure 2-54 Vehicle floorboard prior to Test 588 49
Figure 2-55 Vehicle floorboard after Test 588 50
Figure 2-56 Test 589 (0.2 seconds after impact) 51
Figure 2-57 Test vehicle for Test 589 52
Figure 2-58 Test vehicle after Test 589 52
Figure 2-59 Shallow cobblestone test article prior to Test 589 53
Figure 2-60 Shallow cobblestone test article after Test 589 53
Figure 2-61 Impact sequence and diagram for Test 589 54
Figure 2-62 Vehicle floorboard prior to Test 589 55
Figure 2-63 Vehicle floorboard after Test 589 56
Figure 7-1 – Typical guidearm release 82
Figure 7-2 - Camera Locations 83
Figure 7-3 - Event Switch Layout 84
Figure 7-4 - Vehicle Accelerometer Sign Convention 86
Figure 7-5 - Test 581 Vehicle Accelerations Vs Time 87
Figure 7-6 - Test 581 Vehicle Longitudinal Acceleration, Velocity, and Distance Vs Time 88
Figure 7-7 - Test 581 Vehicle Lateral Acceleration, Velocity, and Distance Vs Time 89
Figure 7-8 - Test 581 Vehicle Roll, Pitch, and Yaw Vs Time 90
Figure 7-9 - Test 581 Acceleration Severity Index Vs Time 91
Figure 7-10 - Test 582 Vehicle Accelerations Vs Time 92

Figure 7-11 - Test 582 Vehicle Longitudinal Acceleration, Velocity, and Distance Vs Time 93
Figure 7-12 - Test 582 Vehicle Lateral Acceleration, Velocity, and Distance Vs Time 94
Figure 7-13 - Test 582 Vehicle Roll, Pitch, and Yaw Vs Time 95
Figure 7-14 - Test 582 Acceleration Severity Index Vs Time 96
Figure 7-15 - Test 583 Vehicle Accelerations Vs Time 97
Figure 7-16 - Test 583 Vehicle Longitudinal Acceleration, Velocity, and Distance Vs Time 98
Figure 7-17 - Test 583 Vehicle Lateral Acceleration, Velocity, and Distance Vs Time 99
Figure 7-18 - Test 583 Vehicle Roll, Pitch, and Yaw Vs Time 100
Figure 7-19 - Test 583 Acceleration Severity Index Vs Time 101
Figure 7-20 - Test 584 Vehicle Accelerations Vs Time 102
Figure 7-21 - Test 584 Vehicle Longitudinal Acceleration, Velocity, and Distance Vs Time 103
Figure 7-22 - Test 584 Vehicle Lateral Acceleration, Velocity, and Distance Vs Time 104
Figure 7-23 - Test 584 Vehicle Roll, Pitch, and Yaw Vs Time 105
Figure 7-24 - Test 584 Acceleration Severity Index Vs Time 106
Figure 7-25 - Test 585 Vehicle Accelerations Vs Time 107
Figure 7-26 - Test 585 Vehicle Longitudinal Acceleration, Velocity, and Distance Vs Time 108
Figure 7-27 - Test 585 Vehicle Lateral Acceleration, Velocity, and Distance Vs Time 109
Figure 7-28 - Test 585 Vehicle Roll, Pitch, and Yaw Vs Time 110
Figure 7-29 - Test 585 Acceleration Severity Index Vs Time 111
Figure 7-30 - Test 587 Vehicle Accelerations Vs Time 112
Figure 7-31 - Test 587 Vehicle Longitudinal Acceleration, Velocity, and Distance Vs Time 113
Figure 7-32 - Test 587 Vehicle Lateral Acceleration, Velocity, and Distance Vs Time 114
Figure 7-33 - Test 587 Vehicle Roll, Pitch, and Yaw Vs Time 115
Figure 7-34 - Test 587 Acceleration Severity Index Vs Time 116
Figure 7-35 - Test 588 Vehicle Accelerations Vs Time 117
Figure 7-36 - Test 588 Vehicle Longitudinal Acceleration, Velocity, and Distance Vs Time 118
Figure 7-37 - Test 588 Vehicle Lateral Acceleration, Velocity, and Distance Vs Time 119
Figure 7-38 - Test 588 Vehicle Roll, Pitch, and Yaw Vs Time 120
Figure 7-39 - Test 588 Acceleration Severity Index Vs Time 121
Figure 7-40 - Test 589 Vehicle Accelerations Vs Time 122
Figure 7-41 - Test 589 Vehicle Longitudinal Acceleration, Velocity, and Distance Vs Time 123
Figure 7-42 - Test 589 Vehicle Lateral Acceleration, Velocity, and Distance Vs Time 124
Figure 7-43 - Test 589 Vehicle Roll, Pitch, and Yaw Vs Time 125
Figure 7-44 - Test 589 Acceleration Severity Index Vs Time 126

LIST OF TABLES

Table 1-1 – Intended Test Conditions 2
Table 2-1 Concrete properties for the various crash tests. 6
Table 2-2 Formliner manufacturers and part numbers. 7
Table 2-3 - Test Vehicle Masses 8
Table 2-4 - Test 581 Assessment Summary 61
Table 2-5 - Test 582 Assessment Summary 62
Table 2-6 - Test 583 Assessment Summary 63
Table 2-7 - Test 584 Assessment Summary 64
Table 2-8 - Test 585 Assessment Summary 65
Table 2-9 - Test 587 Assessment Summary 66
Table 2-10 - Test 588 Assessment Summary 67
Table 2-11 - Test 589 Assessment Summary 68
Table 2-12 - Vehicle Trajectories and Speeds 69
Table 7-1 Test 581 – Deep Cobble - Vehicle Dimensions 74
Table 7-2 Test 582 – Fluted Rib - Vehicle Dimensions 75
Table 7-3 Test 583 – Deep Cobble - Vehicle Dimensions 75
Table 7-4 Test 584 – Mission Arch - Vehicle Dimensions 77
Table 7-5 Test 585 – Cobble Reveal - Vehicle Dimensions 78
Table 7-6 Test 587 – Drystack - Vehicle Dimensions 79
Table 7-7 Test 588 – Fractured Granite - Vehicle Dimensions 80
Table 7-8 Test 589 – Shallow Cobble - Vehicle Dimensions 81
Table 7-9 - Typical Camera Type and Locations 82
Table 7-10 - Accelerometer Specifications 86

1. INTRODUCTION

1.1. Problem

New methods of forming concrete walls and barriers have provided designers with a wide variety of possible architectural treatments in the form of patterns and textures. However, there are limited crash test data to verify that barriers featuring these patterns and textures will comply with National Cooperative Highway Research Program (NCHRP) Report 350[1] crash testing criteria. There is a need to develop guidelines for evaluating the crashworthiness of barriers with a broad range of patterns and textures based on full-scale crash testing of selected representative designs.

1.2. Objective

To determine which textured barrier surfaces will withstand impacts from passenger vehicles (820 – 2000 kg) at speeds of 100 km/h and impact angles of 20° - 25° without producing excessive pitch, roll, yaw, deceleration, or deformation of the vehicle and to develop guidelines to evaluate additional textures without conducting full scale crash testing. Testing will be done in accordance with NCHRP Report 350, Test Level 3, for longitudinal barriers.

1.3. Background And Significance Of Work

There are many different patterns and textures available to architects for use on concrete barriers. Local agencies and the public are increasingly requesting that Caltrans incorporate some of these patterns and textures in new barrier designs to make state highways more aesthetically pleasing. The Federal Highway Administration (FHWA) requires that all new longitudinal barrier installations on the National Highway System comply with the crash testing criteria embodied in NCHRP Report 350. In addition, Caltrans policy stipulates that all such barriers newly installed anywhere on the state highway system must meet the Report 350 criteria. All conventional barrier designs currently being installed on the California State highway system have been crash tested in accordance with Report 350 and have been determined to be compliant. These barriers are constructed only of smooth concrete.

To date, very few concrete barriers with architectural surface treatments featuring patterns or textures in the concrete have been tested to determine whether they meet Report 350 criteria. There is a substantial need for research in this area because the effect of architectural surface treatments is little understood and could have significant safety-related effects.

It would not be practical to conduct full-scale crash tests on every pattern and texture that could conceivably be used on Caltrans barriers. However, crash testing a few selectively chosen patterns could provide the basis for developing guidelines to evaluate the potential crashworthiness of a wide range of patterns and textures. A Caltrans team of architectural and engineering experts determined that a series of crash tests on up to eight different concrete barrier patterns (with two alternate patterns) should be sufficient for such guideline development.

1.4. Literature Search

A literature search using the TRIS, NTIS, and the Compendex Plus databases was conducted at the beginning of the project to find research reports or publications related to the objectives of this project. There were no reports that involved crash testing of various textured barriers as outlined in the objective stated above.

1.5. Scope

Representative panel sections were fabricated and attached to an existing barrier installed at the Caltrans Dynamic Test Facility in West Sacramento. Data were collected from eight vehicular crash tests under the conditions shown in Table 1-1. These data were analyzed to determine if the panels met the criteria set forth in NCHRP Report 350.

Table 1-1 – Intended Test Conditions

CALTRANS Test #	Barrier type	Mass (kg)	Speed (km/h)	Angle (deg)	NCHRP Report 350	
					Test Designation	Vehicle
581	Deep Cobble	820	100	20	3-10	820C
582	Fluted Rib	820	100	20	3-10	820C
583	Deep Cobble	2000	100	25	3-11	2000P
584	Mission Arch	820	100	20	3-10	820C
585	Cobble Reveal	2000	100	25	3-11	2000P
587[1]	Drystack	2000	100	25	3-11	2000P
588	Stone-Ground Fractured Granite	2000	100	25	3-11	2000P
589	Shallow Cobble	2000	100	25	3-11	2000P

[1]Test 586 was intended to test the Drystack pattern. Due to a guidance failure, the 2000P vehicle impacted an unused section of the barrier without affecting the textured section. The test was re-run one week later as Test 587 with a different vehicle.

2. TECHNICAL DISCUSSION

2.1. Test Conditions - Crash Tests

2.1.1. Test Facilities

All of the crash tests were conducted at the Caltrans Dynamic Test Facility in West Sacramento, California. The test area is a large, flat, asphalt concrete surface. There were no obstructions nearby except for a 2-m high earth berm 60 m downstream from the tested barriers.

2.1.2. Test Barrier Design and Construction

In 1997 Caltrans conducted full-scale crash tests on a slip-formed, single-slope, concrete median barrier known as the Type 60G[(2)]. This barrier is 1.42 meters high with a traffic-side face that slopes 9.1 degrees from vertical (Figure 2-1). This barrier is still in place at the Caltrans facility and was used as a "backing" for all of the tests performed in this study[2]. It was determined that casting relatively thin (300 mm) panels against this existing barrier would be less costly than forming and casting an entire textured barrier capable of withstanding full-scale impacts.

It was necessary to be able to remove each set of textured barrier panels easily after testing to make way for the next set of textured panels to be tested. A sheet of plastic was placed over the existing Type 60G barrier to prevent the textured panels from bonding to the Type 60G. Because this kept the textured concrete panel physically separate from the Type 60G concrete, a method was developed to temporarily secure the panels to the Type 60G. Cast in each panel were 19-mm ferrule loop inserts attached to threaded rods. These threaded rods passed through the plastic sheet and into 76 mm diameter holes cored through the existing Type 60G barrier. Thin sheet metal plates placed directly under the ferrule loop inserts kept the fluid concrete from flowing into the 76 mm cored holes (Figure 2-2). Steel plates and nuts were used on the backside of the Type 60G to hold the ferrule loop inserts in place during the casting process. These nuts were tightened on the day of the crash test.

The reusable formwork for each of the textured panel designs was constructed using typical 2" x 4" wood framing to make four separate panels each 2.4-m long. The panels used for Tests 581 through 584 were 1220-mm high while the panels for all other tests were 1422-mm high. The panels were bolted to each other to form a continuous wall 9.8-m long. The panel forms at the ends of the barrier were bolted to a form end-piece, which in turn was bolted to the existing Type 60G barrier via mechanical expansion anchors. The entire formwork assembly was braced against a "kickboard" which was bolted to 19-mm ferrule loop inserts cast into concrete footings in the asphalt directly in front of the barrier (Figure 2-3).

For the 1422-mm high barriers, this kickboard was also backed up by placing portable concrete barrier (PCB) segments up against its outside edge. Further bracing was placed between the formwork and the PCB. Steel straps were also used to secure the top edge of the formwork to the top and back of the Type 60G. All of the panels used in this study were constructed in essentially the same way.

---

[2] The Caltrans Type 60-series barrier has been accepted by the FHWA for use on the National Highway System at Test level 3 (TL-3). For this reason, FHWA did not require the full TL-3 test series (using both the 820C and the 2000P vehicles) to assess each texture. Caltrans initially opted to focus on testing with the 820C sedan, although this focus was later modified.

Figure 2-1 Existing Type 60G barrier

Figure 2-2. Formwork ready for concrete placement
(note the plastic sheeting and ferrule loop inserts)

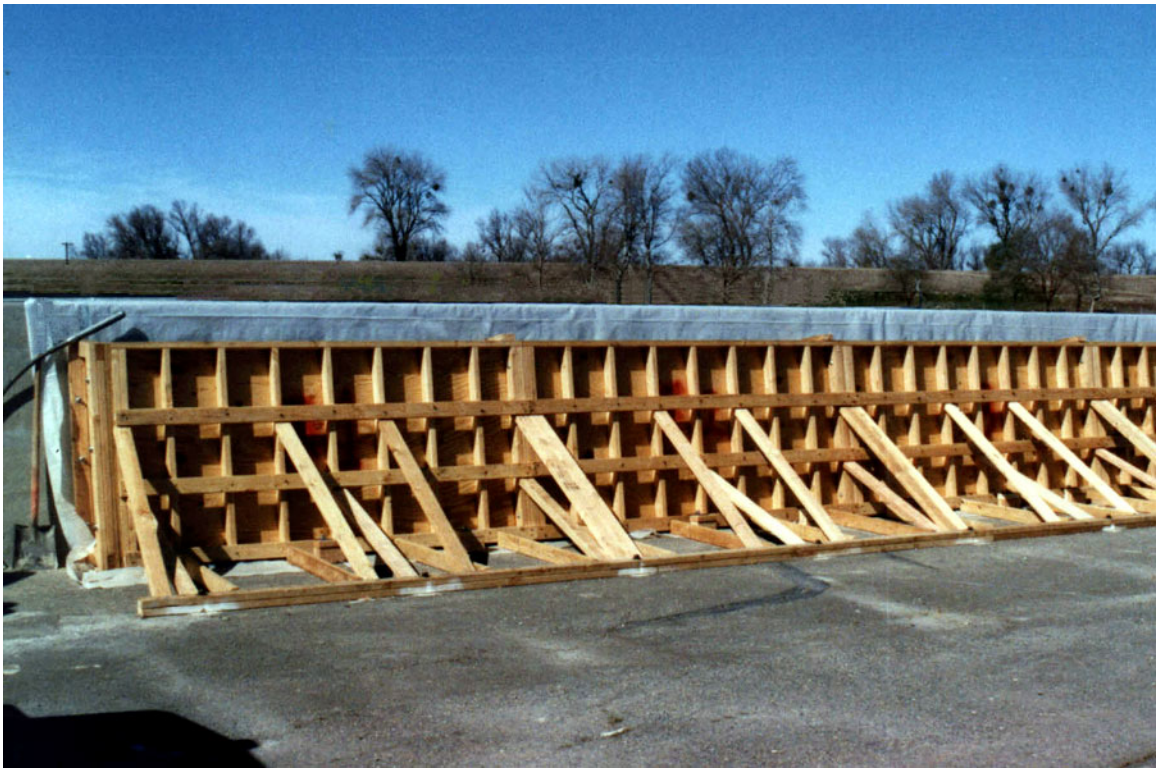

Figure 2-3. Formwork bracing for the 1220 mm high barriers

2.1.3. Concrete

The same concrete mix design was used for all of the barriers tested in this study. It was obtained from a local supplier and typically consisted of the following:

Material	Description	Admixture (ml/ m^3)	Weight (kg)	Volume (m^3)
Coarse aggregate	Perkins 1 x 4		1,115	0.41
Fine aggregates	Perkins conc. sand		811	0.31
Portland cement	Type I/II		251	0.08
Mineral admix	Class F - flyash		84	0.04
Water	Natural		158	0.16
Type A water reducer	Pozzolith 322N	1,256		
Air content 1.50%				0.01
		TOTAL	2418	1.00

Designed slump	101.6 mm
Designed unit weight	2413.8 kg/m3
Designed w/c + p ratio	0.47

As each barrier was cast, a number of sampling cylinders were prepared for later testing of the compressive strength of that particular batch of concrete. Cylinders were sent for testing to the concrete testing section at the Caltrans Translab typically at one-week intervals from the date the barrier was cast. Compressive strength testing of sample cylinders was also scheduled on the day of the crash test as often as possible. Knowing the compressive strength of the concrete for each barrier allowed for a more thorough comparison of the damage done to each barrier. Table 2-1 lists the concrete properties associated with each of the various tests.

Table 2-1 Concrete properties for the various crash tests.

Caltrans Test #	**Barrier type**	**Date Cast**	**Date of Crash Test**	**Age of concrete on crash test date (days)**	**Concrete data**	
					Strength (Mpa)	**Age (days)**
581	Deep Cobble	2/7/01	3/14/01	35	27.4	28
582	Fluted Rib at 45°	2/28/01	3/28/01	28	26.1	28
583	Deep Cobble	2/7/01	4/24/01	76	39.6	76
584	Mission Arch	4/12/01	5/8/01	26	29.9	29
585	Cobble Reveal	5/30/01	6/27/01	28	25.7	28
587	Drystack	6/20/01	7/25/01	35	25.0	28
588	Stone-Ground Fractured Granite	10/31/01	11/27/01	27	25.0	27
589	Shallow Cobble	2/20/02	3/20/02	28	29.3	27

2.1.4. Formliner Information

The formliners used throughout this study were acquired from various sources. Table 2-2 lists the manufacturer and part number for the formliners used to construct the test articles in this study.

Table 2-2 Formliner manufacturers and part numbers.

Caltrans Test #	Barrier type	Formliner Manufacturer	Part Number
581	Deep Cobble	Dayton Richmond	1520
582	Fluted Rib	Dayton Richmond	1704
583	Deep Cobble	Dayton Richmond	1520
584	Mission Arch*	Dayton Richmond (light sandblast) Dayton Richmond (heavy sandblast)	1601 1602
585	Cobble Reveal	Dayton Richmond (cobble) Dayton Richmond (light sandblast)	1520 1601
587	Drystack	Fitzgerald Formliner	17911-24
588	Stone Ground Fractured Granite	Scott System, Inc.	FLFF-111
589	Shallow Cobble	Scott System, Inc.	FLST-124

* Caltrans staff produced this design by attaching commercial formliner sheeting to plywood.

The deep cobblestone formliner produced a pattern of cobblestones ranging in size from 76 mm to 660 mm. The distance from the background "mortar" in which the stones are "set" to the face of the stones varied from 57 mm to a maximum of 64 mm. This high relief is the reason this pattern is referred to "deep cobble" throughout this report. Compare this to the "shallow cobble" used for Test 589.

The formliner used in Test 582 is referred to as a ¾" fluted rib because it has a series of ribs that are each ¾" high and ¾" wide at the top. Each of the "valleys" between the ribs are ¾" wide at the base. The center-to-center spacing of the ribs is 2". All of the ribs had a surface finish that was smooth with a very fine grain-like texture.

The mission arch pattern tested in Test 584 was produced by Caltrans staff using a combination of sandblast-texture formliners. The "light" sandblast texture had a maximum relief of 3 mm while the "heavy" texture had a maximum relief of 9 mm. The barrier face was constructed by bonding sheets of "light" sandblast formliner to ¾" plywood. The arches were made by cutting the shape from 1" plywood and then bonding "heavy" sandblast formliner to

these pieces. These pieces were then attached to the "face sheets" to produce the insets in the final barrier.

The cobble reveal was produced by Caltrans staff using a combination of the deep cobblestone formliner used in Test 581 and the "light" sandblast formliner used to produce the mission arch. The lower 610 mm of the barrier face had a "light" sandblast texture while the next 750 mm utilized the deep cobble texture. The cobblestone band was capped with a 63-mm wide strip of light sandblast texture.

The drystack stone pattern with its deep "mortar" joints produced a barrier that resembles a wall constructed by simply stacking fieldstones. These joints were typically 25 mm wide and 33 mm deep. The maximum "offset" from the face of one stone to an adjacent stone across a joint was 5 mm. Each of the stones had a mildly undulating surface that typically varied only 10 mm over the face of the stone.

The stone ground fractured granite formliner produced a smooth-faced barrier with a random pattern of insets. These insets or "valleys" varied in width and length but their maximum depth was 13 mm. From the "floor" of the "valley" toward the face of the barrier the slope varied from gentle to almost vertical.

The shallow cobble pattern was quite similar to the deep cobble except that the stones appear to be set deeper into the background field of "mortar". The stones in this pattern ranged from 100 mm to 254 mm in diameter. The typical relief was approximately 19 mm.

2.1.5. Test Vehicles

The test vehicles complied with NCHRP Report 350 (Table 2-3). For all tests, the vehicles were in good condition, free of major body damage and were not missing any structural parts. All of the vehicles had front-mounted engines and standard equipment. All of the 2000P vehicles had air conditioning while the 820C vehicles did not. Only the 2000P vehicle used in Test 583 had a tow package.

Table 2-3 - Test Vehicle Masses

Test No.	Vehicle	Ballast (kg)	Test Inertial (kg)
581	1991 Chevrolet Sprint	50	823.0
582	1990 Geo Metro	0	801.5
583	1990 GMC Sierra 2500	0	1992
584	1992 Geo Metro	52	842
585	1990 Chevrolet 2500	10.4	1958
587	1998 GMC Sierra 2500	0	2027
588	1994 Chevrolet 2500	33.1	1965
589	1994 Chevrolet 2500	18.6	1956

All 2000P test vehicles were self-powered and used a speed control device to limit acceleration once the impact speed had been reached. All 820C test vehicles were cable-towed using a 1-ton pickup with dual rear wheels. This tow vehicle was equipped with a speed control device similar to that used on the self-propelled 2000P vehicles. Remote braking was possible at any time during all tests via a radio-link, remote controlled braking setup. A short distance before the point of impact each vehicle was released from the guidance rail and either the ignition system was deactivated or the vehicle was released from the cable tow system as applicable. A detailed description of the test vehicle equipment and guidance system is contained in Appendices 7.1 and 7.2.

2.1.6. Data Acquisition System

The impact event of each crash test was recorded with either 6 or 7 high-speed 16-mm movie cameras, one normal-speed 16-mm movie camera, one Beta format video camera, one 35-mm still camera with an auto-winder and one 35-mm sequence camera. The test vehicles and the barrier were photographed before and after impact with a normal-speed 16-mm movie camera, a Beta format video camera and a color 35-mm camera. A film report of this project was assembled using edited portions of the film coverage.

Two sets of orthogonal accelerometers were mounted in all vehicles at the center of gravity. One set of rate gyro transducers was placed 191 mm behind the center of gravity (along the X axis) to measure the roll, pitch, and yaw rates. The data were used in calculating the occupant impact velocities, ridedown accelerations, and maximum vehicle rotation.

All 820C vehicles had anthropomorphic dummies. The 2000P vehicles did not.

Two separate digital transient data recorders (TDRs) manufactured by GMH Engineering (Model II) were used to record electronic data during all tests. The digital data were analyzed with custom DADiSP workbooks using a personal computer.

2.2. Test Results - Crash Tests

A description of the impact, the vehicle damage, and the barrier damage is given in this section. A film report with edited footage from tests 581 through 589 has been compiled and is available for viewing.

2.2.1. Test 581

2.2.1.1. Test 581 Impact Description

The impact angle was set at 20° by placement of the guide rail. Film analysis indicated that the impact angle was 20.1°. The impact speed of 97.4 km/h was obtained by averaging the speed of 97.7 km/h from a single speed trap located just upstream from the impact point (two were used but, one malfunctioned) and the speed of 97.1 km/h from film analysis. The test vehicle impacted the barrier 1.2 m downstream of the leading edge of the barrier as intended. The left front corner of the vehicle began to deform and the vehicle began to yaw slightly right (positive) as the impact progressed. At 0.09 seconds after impact the upper section of the driver side door frame was deformed outward to a maximum opening of about 160 mm. The back left side of the vehicle contacted the barrier 0.15 seconds after the initial impact. This secondary impact by the rear of the vehicle caused slight damage to the left rear quarter section of the vehicle. This slowed the positive yaw of the vehicle and also initiated a slight degree of positive

pitch (nose up) to a maximum of 2.2°. The maximum roll was less than 5° as the right-side tires briefly lost contact with the ground approximately 0.25 seconds after impact. At 0.37 seconds after initial impact the vehicle lost contact with the barrier at which time the exit speed was determined through film analysis to be 78.0 km/h and the exit angle was 3.1°. The left-side tires remained in contact with the pavement throughout the entire test. The right front tire regained contact with the pavement at 0.53 seconds after impact and the right rear regained contact at 1.3 seconds after initial impact. The vehicle was smoothly redirected into the run-out area. The brakes were applied 0.58 seconds after the initial impact as indicated by the firing of the brake flash mounted on top of the vehicle. The vehicle came to rest in an open area approximately 25 m downstream from the end of the barrier. Figure 2-4 through Figure 2-8 show the pre-test and post-test condition of the test vehicle and test article. Sequence photographs of the impact for Test 581 are shown as Figure 2-9 on the data summary sheet on page 13.

Figure 2-4 Test vehicle for Test 581

Figure 2-5 Test vehicle after Test 581

Figure 2-6. Left front corner of test vehicle after Test 581

Figure 2-7 Cobble pattern test article prior to Test 581

Figure 2-8 Cobble pattern test article after Test 581

Data Summary Sheet

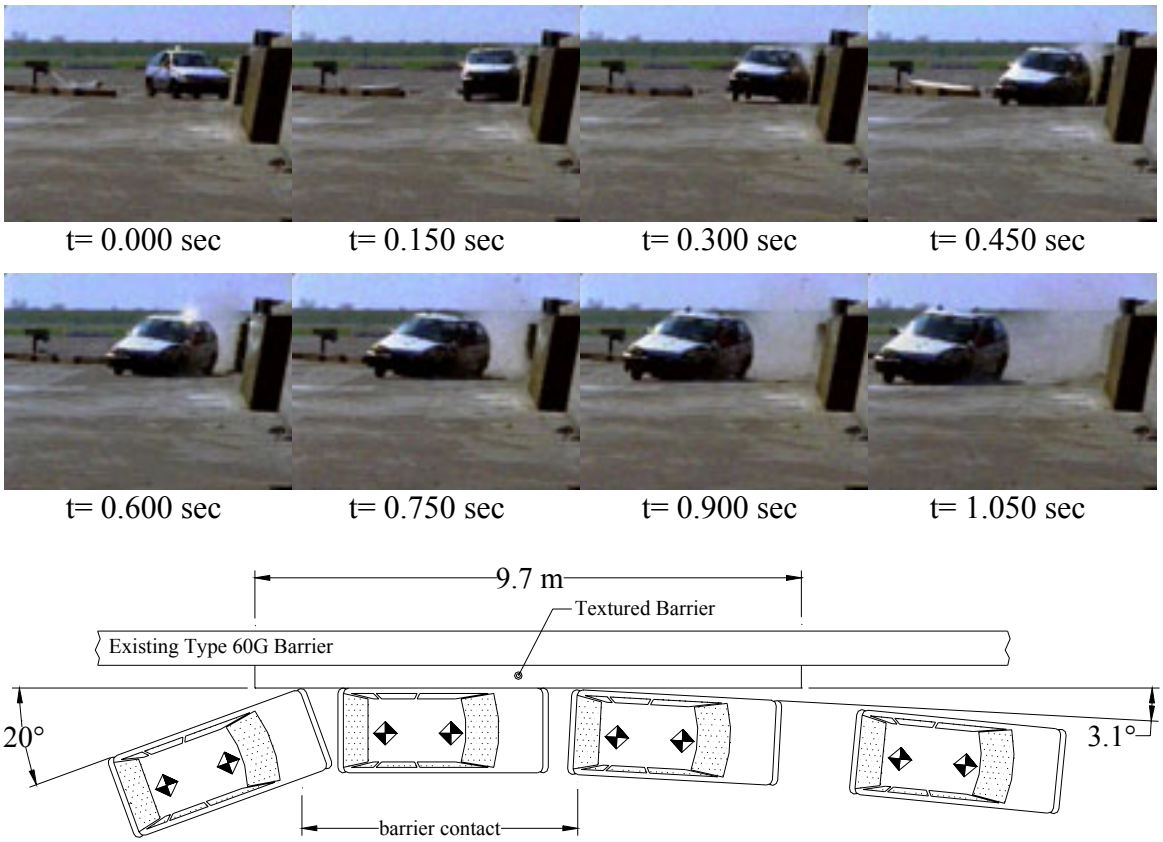

Figure 2-9 Impact sequence and diagram for Test 581

Test Barrier: Type: 1220-mm high, deep cobble textured barrier with a Type 60 profile
Length: 9.75-m total length
Test Date: March 14, 2001

Test Vehicle: Model: 1991 Chevrolet Sprint
Inertial Mass: 823.0 kg
Impact / Exit Velocity: 97.4 km/h / 78.0 km/h
Impact / Exit Angle: 20.1° / < 3.5°

Test Dummy: Type: Hybrid III
Weight / Restraint: 74.8 kg / lap and shoulder belt
Position: Front Left

Test Data: Occ. Impact Velocity (Long / Lat): 5.62 m/s / -6.81 m/s
Ridedown Acceleration (Long / Lat): -7.96 g / 9.22 g
ASI: 1.65
Exterior: VDS[3]/CDC[4] LFQ-4, LD-1 / 11LDMW2
Interior: OCDI[1] x1x0101 (components a and c were not available)

Barrier Damage: Minor scrapes, gouges, and chipping on some cobbles. The barrier would not require immediate repair.

2.2.1.2. Test 581 Vehicle Damage

The left front quarter section of the vehicle was moderately damaged in the initial impact with the barrier. The left front fender, hood, bumper, headlamp area, grille, and suspension components were all affected. The driver side doorframe was deformed outward but the door remained latched. The left front tire was also ruptured. Some minor damage along the left side of the vehicle and to the left rear quarter occurred as the vehicle continued to contact the barrier after the initial impact. The maximum deformation of the driver side floorboard was 105 mm, mostly in the vicinity of the wheel well. This was within the generally accepted limit of 150 mm.[3] Nevertheless, this deformation was of some concern because it occurred in the narrowest part of the driver footwell and was greater than what is usually seen in an 820C test. Moreover, it was the result of the left front wheel being pushed back in the wheel well, indicative of snagging. The decision to run test 3-11 on the cobble texture was based on snagging concerns.

The longitudinal and lateral components of the occupant impact velocity and the occupant ridedown acceleration were below the allowed maximums of 12 m/s and 20 g, respectively. The longitudinal occupant impact velocity was 5.62 m/s while the lateral component was -6.81 m/s. The longitudinal occupant ridedown acceleration was -7.96 g while the lateral component was 9.22 g. Test results are summarized in Table 2-4 on page 61.

2.2.1.3. Test 581 Barrier Damage

The damage to the barrier was cosmetic in nature and would not need immediate repair to remain crashworthy. This damage consisted of minor scrapes and gouges in the concrete surface of the barrier which. The gouges and scrapes could be filled or patched on-site by maintenance crews.

2.2.2. Test 582

2.2.2.1. Test 582 Impact Description

The impact angle was set at 20° by placement of the guide rail and the vehicle did not deviate from this angle. The impact speed of 96.7 km/h was obtained by averaging the output from two separate electronic speed traps located just upstream from the impact point. This speed was also verified through high-speed film analysis. The test vehicle impacted the barrier 1.2 m downstream of the leading edge of the barrier as intended. The left front corner of the vehicle began to deform and the vehicle immediately began to climb the face of the barrier. The back left side of the vehicle contacted the barrier 0.18 seconds after the initial impact. As the back left quarter section of the vehicle came into full contact with the barrier, it too began to climb. Film analysis indicated the vehicle reached a maximum height of 900 mm as measured from the ground to the undercarriage approximately 0.51 seconds after initial impact while all four wheels were off the ground. At 0.33 seconds after initial impact the vehicle lost contact with the barrier

---

[3] NCHRP Report 350 does not specify a maximum allowable limit for occupant compartment deformation. However, the Federal Highway Administration has established an informal limit of 150 mm that is generally accepted by the roadside safety community.

at which time the speed was determined through film analysis to be 87.4 km/h and the exit angle was less than 1°. The brakes were applied 0.66 seconds after the initial impact as indicated by the firing of the brake flash mounted on top of the vehicle. The nose of the vehicle began to pitch down (negative) and the vehicle had rolled right nearly 90° when the right front tire regained contact with the ground. All four wheels were back in contact with the ground 0.77 seconds after initial impact. At this point the vehicle had yawed right (positive) until its longitudinal axis was nearly perpendicular to its travel path at which point it began to roll left (negative). The roll continued for a full 720° at which time the vehicle came to rest on all four tires approximately 24 m downstream from the initial impact. Figure 2-10 through Figure 2-15 show the pre-test and post-test condition of the test vehicle and test article. Sequence photographs of the impact for Test 582 are shown as Figure 2-16 on the data summary sheet on page 19.

Figure 2-10 Test vehicle prior to Test 582

Figure 2-11 Test vehicle and test article prior to Test 582

Figure 2-12 Test vehicle 582 during the Test
(the vehicle rolled over twice to the left after landing)

Figure 2-13 Test vehicle after Test 582

Figure 2-14 Test article after Test 582

Figure 2-15 Test article after Test 582

Data Summary Sheet

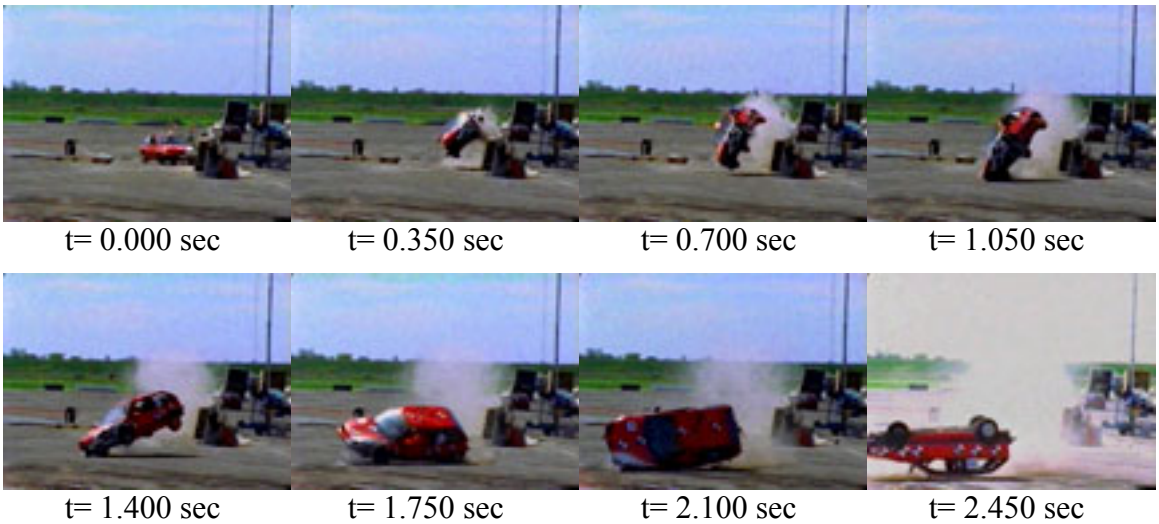

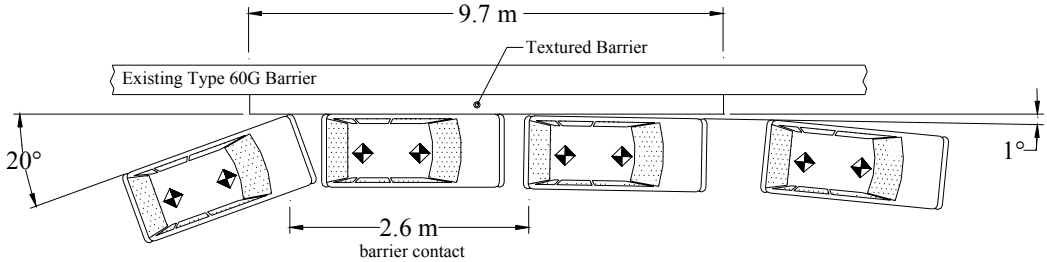

Figure 2-16 Impact sequence and diagram for Test 582

Test Barrier: Type: 1220-mm high, fluted rib at 45° textured barrier with a Type 60 profile
Length: 9.75-m total length
Test Date: March 28,2001

Test Vehicle: Model: 1990 Geo Metro
Inertial Mass: 801.5 kg
Impact / Exit Velocity: 96.7 km/h / 87.4 km/h
Impact / Exit Angle: 20.0° / < 5°

Test Dummy: Type: Hybrid III
Weight / Restraint: 74.8 kg / lap and shoulder belt
Position: Front Left

Test Data: Occ. Impact Velocity (Long / Lat): 5.51 m/s / -5.93 m/s
Ridedown Acceleration (Long / Lat): -6.51 g / -6.04 g
ASI: 1.40
Exterior: VDS(3)/CDC(4) LFQ-5,L&T-5,R&T-5 / 11LDAO5
Interior: OCDI(1) 0102000

Barrier Damage: Several of the 19-mm deep flutes were broken and knocked off of the face of the barrier. The vehicle left scrapes and gouges as it climbed to near the top of the barrier.

2.2.2.2. Test 582 Vehicle Damage

The left front corner of the vehicle was moderately damaged in the initial impact with the barrier. The left rear quarter section suffered minor damage during the secondary impact with the barrier. The majority of the damage to the vehicle was sustained during the post-impact rollover. The driver-side door remained latched even though film analysis showed a 160 mm opening along the top of the door. The amount of passenger compartment deformation was minimal and the floorboard deformation was well below the 150-mm informal limit.

The longitudinal and lateral components of the occupant impact velocity and the occupant ridedown acceleration were below the allowed maximums of 12 m/s and 20 g, respectively. The longitudinal occupant impact velocity was 5.51 m/s while the lateral component was -5.93 m/s. The longitudinal occupant ridedown acceleration was -6.51 g while the lateral component was -6.04 g. Test results are summarized in Table 2-4 on page 61.

2.2.2.3. Test 582 Barrier Damage

Many of the concrete flutes along the path of the wheel assemblies were broken away at their base (i.e. where they meet the solid surface of the barrier). The typical length of each of these broken sections of flute was about 175 mm. The barrier could remain in service and would remain crashworthy until repairs could be implemented. Repair times for this barrier would be lengthy due to the extent of the damage and geometric nature of the pattern.

2.2.3. Test 583

2.2.3.1. Test 583 Impact Description

The impact angle was set at 25° by placement of the guide rail and the vehicle did not deviate from this angle prior to impact. The impact speed of 100.2 km/h was obtained by an average of two different speed traps located just upstream from the impact point. The test vehicle impacted the barrier 2.4 m downstream of the leading edge of the barrier as intended. There was moderate deformation to the left front corner of the vehicle as it impacted and began to yaw slightly right (positive). At 0.1 seconds after impact the upper section of the driver side door frame was deformed outward to a maximum opening of about 300 mm. The back left side of the vehicle contacted the barrier 0.24 seconds after the initial impact. This secondary impact by the rear of the vehicle caused slight damage to the left rear quarter section of the vehicle and halted the positive yaw of the vehicle. The vehicle had a slight degree of positive pitch (nose up) at this point, which reached a maximum of 4°. The maximum roll was less than 8° (to the left) as the right-side tires briefly lost contact with the ground approximately 0.32 seconds after impact. At 0.38 seconds after initial impact the vehicle lost contact with the barrier at which time the exit speed was determined through film analysis to be 69.5 km/h and the exit angle was less than 4°. The left-side tires remained in contact with the pavement throughout the entire test. The brakes were applied 1.23 seconds after the initial impact as indicated by the firing of the brake flash mounted on top of the vehicle. The damaged suspension components of the vehicle caused it to swerve slightly left after it lost contact with the test article. This led to a secondary collision with a textured barrier that was set up for a subsequent test. Fortunately this second textured barrier was covered with 25-mm thick steel plates to protect it from just such an event. The vehicle came to rest in an open area approximately 40 m downstream from the end of the

barrier. Figure 2-17 through Figure 2-22 show the pre-test and post-test condition of the test vehicle and test article. Sequence photographs of the impact for Test 583 are shown as Figure 2-23 on the data summary sheet on page 25.

Figure 2-17 Test vehicle prior to Test 583

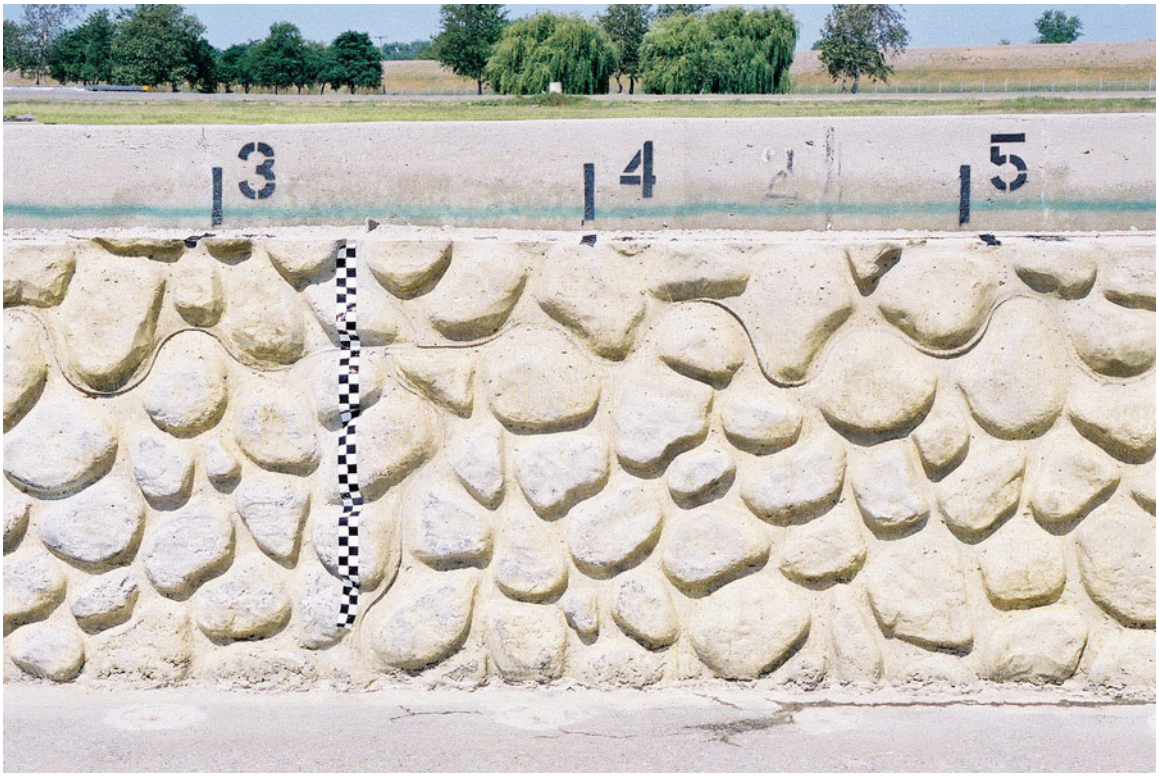

Figure 2-18 Test vehicle and test article prior to Test 583

Figure 2-19 Test vehicle 583 during the Test

Figure 2-20 Test vehicle after Test 583

Figure 2-21 Test article after Test 583 (downstream of impact point)

Figure 2-22 Test article after Test 583 (at impact point)

Data Summary Sheet

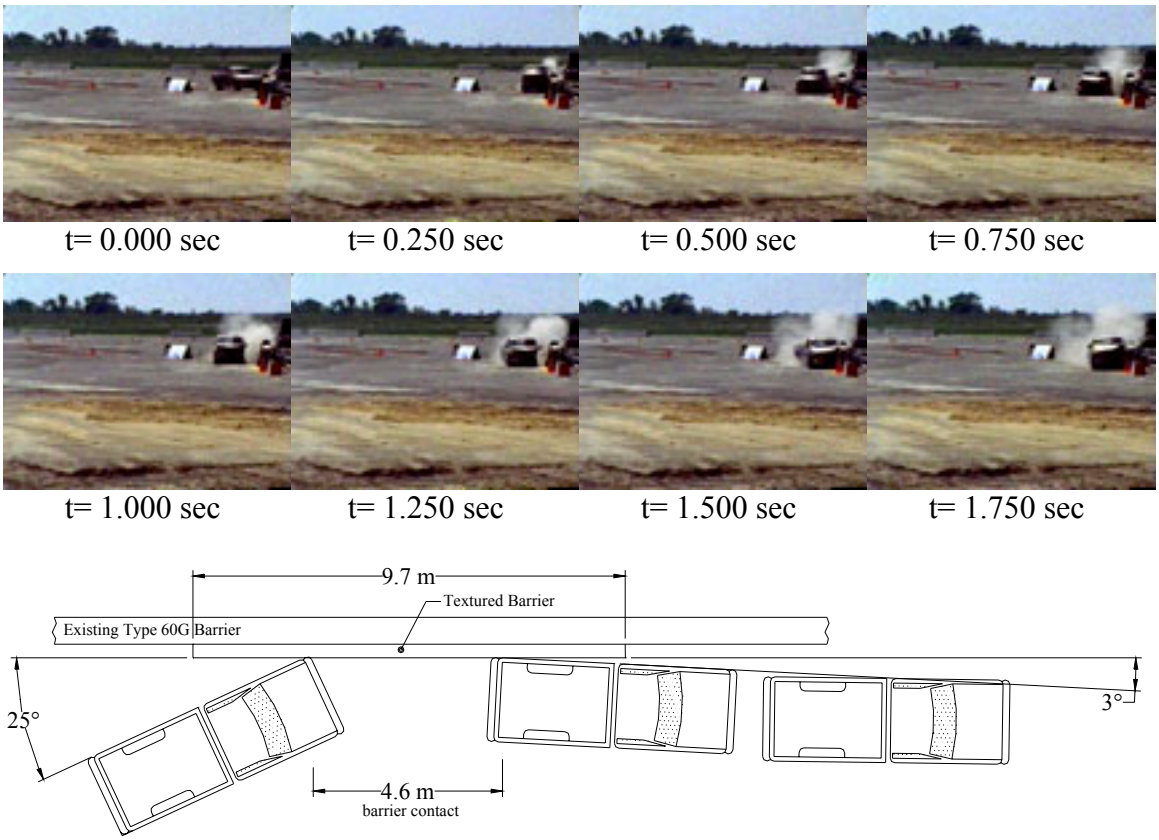

Figure 2-23 Impact sequence and diagram for Test 583

Test Barrier: Type: 1220-mm high, deep cobblestone textured barrier with a Type 60 profile
Length: 9.75-m total length
Test Date: April 24, 2001

Test Vehicle: Model: 1990 GMC 2500
Inertial Mass: 1991 kg
Impact / Exit Velocity: 100.2 km/h / 69.5 km/h
Impact / Exit Angle: 25.0° / < 4°

Test Dummy: Type: None used

Test Data: Occ. Impact Velocity (Long / Lat): 7.43 m/s / -7.23 m/s
Ridedown Acceleration (Long / Lat): -5.97 g / 11.84 g
ASI: 1.55
Exterior: VDS(3)/CDC(4) LFQ-6 / 11LDAW7
Interior: OCDI(1) 1021000

Barrier Damage: Minor scraping and gouging of the concrete surface with minor chipping on the downstream edges of some of the cobbles. The barrier would not require immediate repair.

2.2.3.2. Test 583 Vehicle Damage

The left front corner of the vehicle was substantially damaged in the initial impact with the barrier. The left side of the vehicle also had significant scraping and the door was pushed rearward. The driver-side door remained latched even though the top window frame portion was buckled outward from the cab roof by 250 mm. The left front bumper and left fender were pushed rearward and inward. The left side tires were deflated but the right side tires remained inflated. The left front wheel assembly was pushed rearward enough to cause excessive deformation of the driver's side floorboard area (Figure 2-24). This amount of deformation exceeded the upper limit of 150 mm which has been informally proposed by the FHWA and is generally accepted by the roadside safety community.

As mentioned in the impact description for Test 583, the test vehicle suffered a secondary collision with 25-mm steel plates that were covering another test article. This collision occurred at a relatively low speed, at an angle of less than 10 °, and against a smooth surface. These factors kept the damage from this secondary collision to a minimum.

The longitudinal occupant impact velocity and longitudinal occupant ridedown acceleration were well below the allowed maximums of 12 m/s and 20 *g*, respectively. The longitudinal occupant impact velocity was 7.43 m/s and the longitudinal occupant ridedown acceleration was -5.97 *g*. Test results are summarized in Table 2-6 on page 63.

Figure 2-24 Vehicle floorboard deformation after Test 583

2.2.3.3. Test 583 Barrier Damage

Most of the damage to the barrier was superficial scraping and gouging. The vehicle impact caused some edges of individual cobbles to chip or break off (Figure 2-21 and Figure 2-22). The barrier would not require immediate repair. The gouges and scrapes could be filled on-site by maintenance crews.

2.2.4. Test 584

2.2.4.1. Test 584 Impact Description

The impact angle was set at 20° by placement of the guide rail and film analysis indicates the impact angle was 19.3°. The impact speed of 95.8 km/h was obtained by an average of two different speed traps located just upstream from the impact point and also verified by film analysis. The test vehicle impacted the barrier 1.2 m downstream of the leading edge of the barrier as intended. As the impact progressed, the left front corner of the vehicle deformed and the vehicle began to yaw right (positive). At 0.07 seconds after impact the upper section of the driver side door frame was deformed outward to a maximum opening of about 115 mm. The left rear quarter of the vehicle contacted the barrier 0.15 seconds after the initial impact. This secondary impact by the rear of the vehicle caused slight damage to the left side of the vehicle. The vehicle remained parallel to the barrier and began a slight degree of positive pitch (nose up) to a maximum of 3.0°. From analysis of high-speed film, the maximum roll was less than 7° to the left (negative) as the right-side tires briefly lost contact with the ground approximately 0.20 seconds after impact. At 0.38 seconds after initial impact the vehicle lost contact with the barrier at which time the exit speed was determined through film analysis to be 74.4 km/h and the exit angle was less than 7°. The left-side tires remained in contact with the pavement throughout the entire test. The right front tire regained contact with the pavement at 0.56 seconds after impact and the right rear regained contact at 0.68 seconds after initial impact. The vehicle was smoothly redirected into the run-out area. The brakes were applied 1.19 seconds after the initial impact as indicated by the firing of the brake flash mounted on top of the vehicle. The vehicle came to rest in an open area approximately 35 m downstream from the end of the barrier. Figure 2-25 through Figure 2-29 show the pre-test and post-test condition of the test vehicle and test article.

Sequence photographs of the impact for Test 584 are shown as Figure 2-31 on the data summary sheet on page 31.

Figure 2-25 Test vehicle prior to Test 584

Figure 2-26 Test vehicle and test article prior to Test 584

Figure 2-27 Test vehicle 584 during the Test

Figure 2-28 Test vehicle after Test 584

Figure 2-29 Test article after Test 584

Figure 2-30 Test article after Test 584

Data Summary Sheet

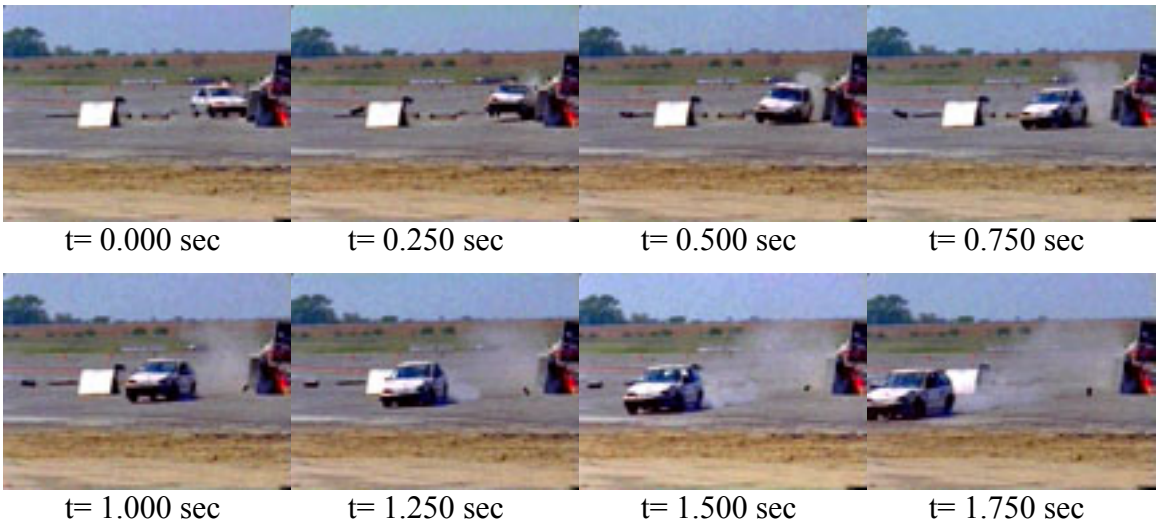

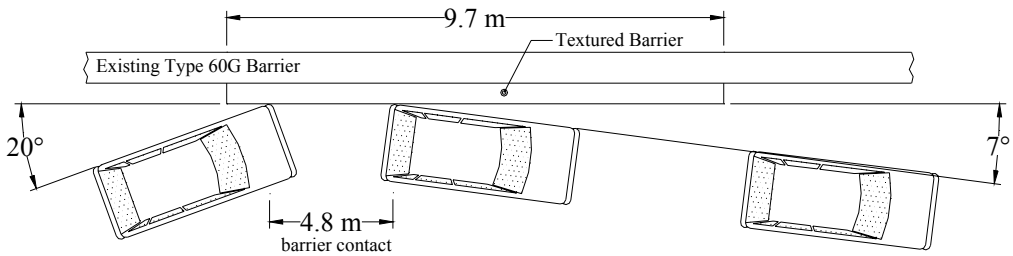

Figure 2-31 Impact sequence and diagram for Test 584

Test Barrier: Type: 1220-mm high, Mission Arch textured barrier with a Type 60 profile
Length: 9.75-m total length
Test Date: May 8, 2001

Test Vehicle: Model: 1992 Geo Metro
Inertial Mass: 842 kg
Impact / Exit Velocity: 95.8 km/h / 74.4 km/h
Impact / Exit Angle: 19.3° / < 7°

Test Dummy: Type: Hybrid III
Weight / Restraint: 74.8 kg / lap and shoulder belt
Position: Front Left

Test Data: Occ. Impact Velocity (Long / Lat): 5.36 m/s / -6.70 m/s
Ridedown Acceleration (Long / Lat): -4.07 g / 9.81 g
ASI: 1.62
Exterior: VDS[3]/CDC[4] LFQ-3, LP-1 / 11LDES2
Interior: OCDI[1] 0101000

Barrier Damage: Very minor scraping of the sandblast surfaces. No chipping or gouging was observed. The barrier would not require immediate repair.

2.2.4.2. Test 584 Vehicle Damage

The left front corner of the vehicle was moderately damaged in the initial impact with the barrier. The left side of the vehicle had minor scraping and the door was pushed slightly rearward. The driver-side door remained latched even though film analysis showed a 115 mm gap along the top edge of the doorframe during the impact. The left front bumper and left fender were pushed slightly rearward and inward. All four tires remained inflated. The left front tire and wheel assembly were pushed rearward enough to cause minor deformation of the drivers side floorboard area. This deformation was no more than 40 mm and would not pose a serious threat to an occupant, Figure 2-32.

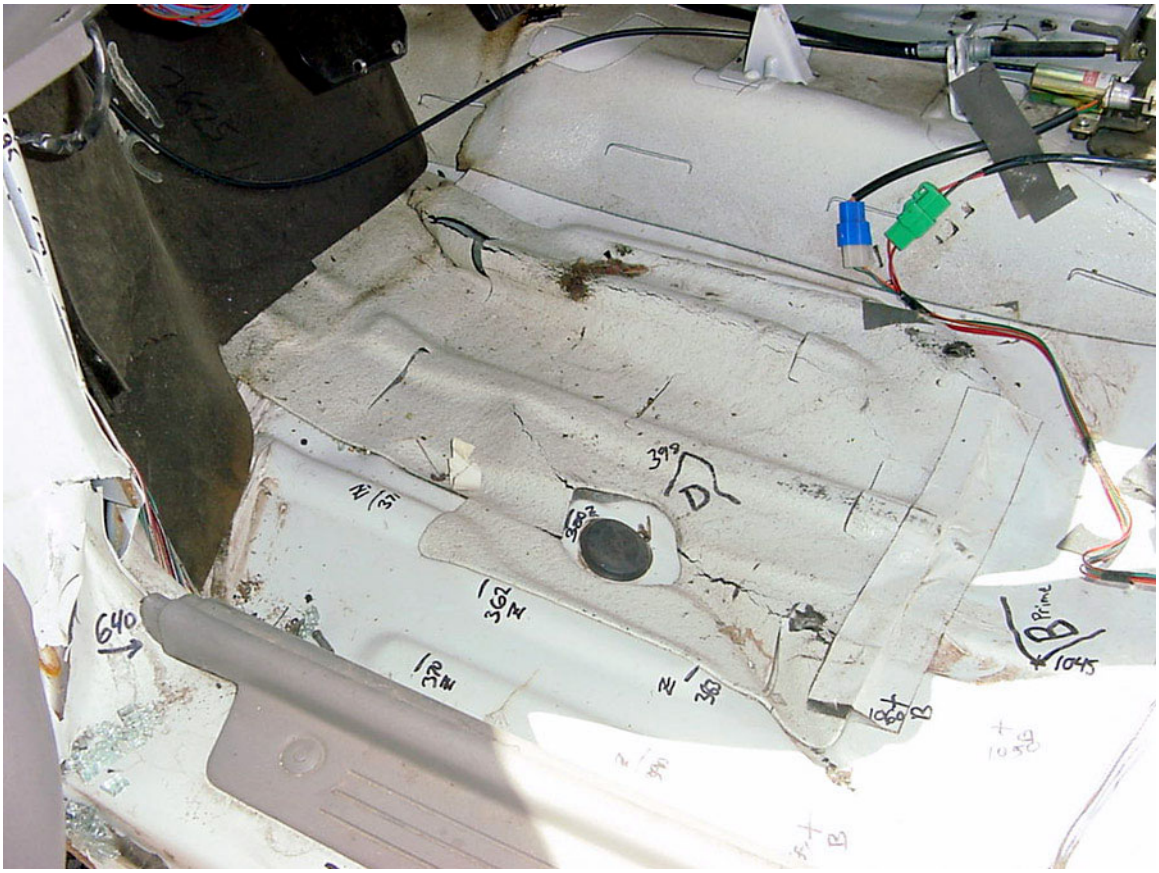

Figure 2-32 Test 584 vehicle floorboard deformation

The impact speed for Test 584 was 4.2 km/h below the anticipated 100 km/h and slightly below the ± 4 km/h tolerance as specified in Report 350. However, the "test inertial" mass of the 820C vehicle was 842 kg which is within the ± 25 kg allowed in Report 350. The lower speed, but higher mass, resulted in an impact severity comparable to an 820C test that was within the limits for test inertial mass and speed. The nominal impact severity value for Test Designation 4-10 as given in NCHRP Report 350 is 37.0 kJ with a suggested tolerance of –2.9 to +3.0. With a mass of 842 kg and an impact speed of 95.8 km/h, the impact severity for this test was 34.9 kJ, which is above the lower limit of 34.1 kJ.

The longitudinal and lateral components of the occupant impact velocity and the occupant ridedown acceleration were below the allowed maximums of 12 m/s and 20 g, respectively. The longitudinal occupant impact velocity was 5.36 m/s while the lateral component was -6.70 m/s. The longitudinal occupant ridedown acceleration was -4.07 g while the lateral component was 9.81 g. Test results are summarized in Table 2-7 on page 64.

Damage to this test vehicle was significantly less than the vehicle in Test 581. There was far less occupant compartment deformation and front wheel snagging. For this reason, a decision was made to waive testing of the Mission Arch with the 2000P vehicle. However, testing staff also recognized that the most likely problem to be encountered in further textured barrier testing would be occupant compartment deformation in the 2000P vehicle as a consequence of wheel snagging. All subsequent testing focused on the 2000P vehicle to assure that the testing reflected a worst-case scenario.

2.2.4.3. Test 584 Barrier Damage

There was essentially no permanent damage to the barrier. The vehicle caused only minor scrapes to the concrete surface of the barrier. The barrier would not require immediate repair.

2.2.5. Test 585

2.2.5.1. Test 585 Impact Description

The test vehicle impacted the barrier at an angle of 24.3° and 2.4 m downstream of the leading edge of the barrier as intended. The impact speed of 99.2 km/h was obtained by an average of two different speed traps located just upstream from the impact point and verified through high-speed film analysis. The left front corner of the vehicle began to deform and the vehicle started to yaw right (positive) as the impact progressed. At 0.10 seconds after impact the upper section of the driver side door frame was deformed outward to a maximum opening of about 206 mm. The back left side of the vehicle contacted the barrier 0.21 seconds after the initial impact. This secondary impact by the rear of the vehicle caused slight damage to the left rear quarter section of the vehicle. This halted the positive yaw of the vehicle. The vehicle then began to undergo a slight degree of positive pitch (nose up) to a maximum of 4.0°. The front and rear tires lost contact with the ground at approximately 0.09 and 0.25 seconds after impact respectively. At 0.26 seconds after initial impact the vehicle lost contact with the barrier at which time the exit speed was determined through film analysis to be 71.7 km/h and the exit angle was less than 3°. The maximum roll was less than 3°. The front tires regained contact with the pavement at about 0.48 seconds after impact and the right rear tire followed shortly thereafter. The vehicle was smoothly redirected into the run-out area. The brakes were applied more than 2.1 seconds after the initial impact as determined by the film analysis. The vehicle came to rest in an open area approximately 45 m downstream from the end of the barrier. Figure 2-33 through Figure 2-36 show the pre-test and post-test condition of the test vehicle and test article. Sequence photographs of the impact for Test 585 are shown as Figure 2-37 on the data summary sheet on page 36.

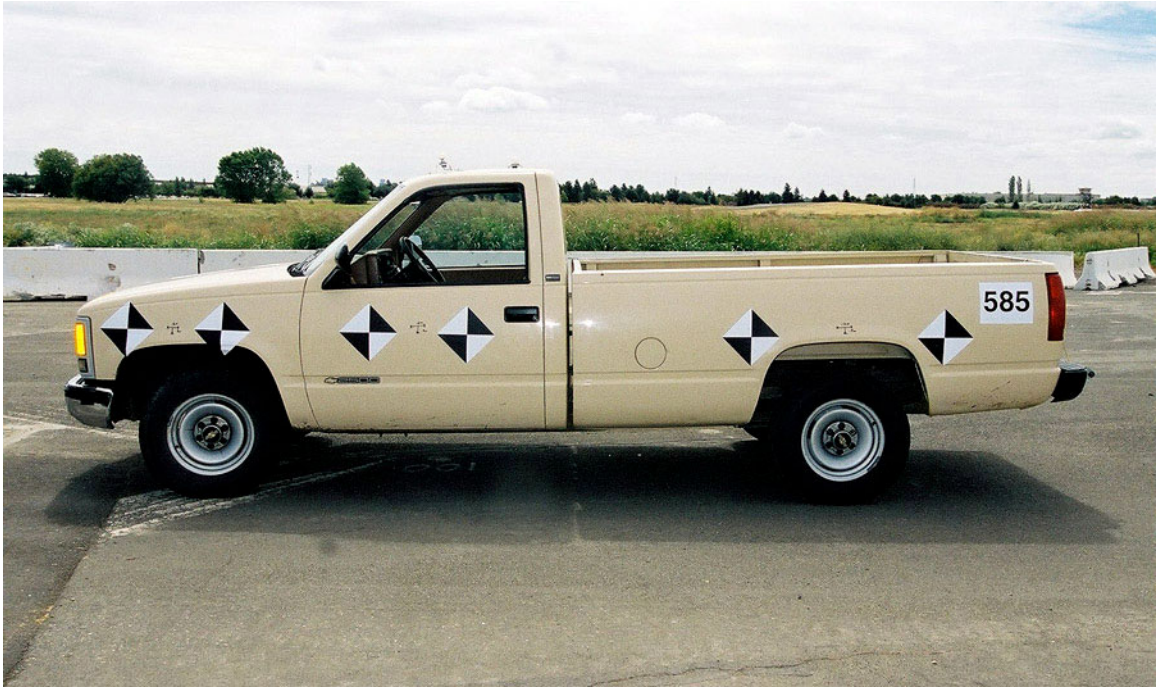

Figure 2-33 Test vehicle for Test 585

Figure 2-34 Test vehicle after Test 585

Figure 2-35 Cobble-Reveal test article prior to Test 585
(the cobblestone section of the pattern is the same as that used in Test 581)

Figure 2-36 Cobble-Reveal test article after Test 585

Data Summary Sheet

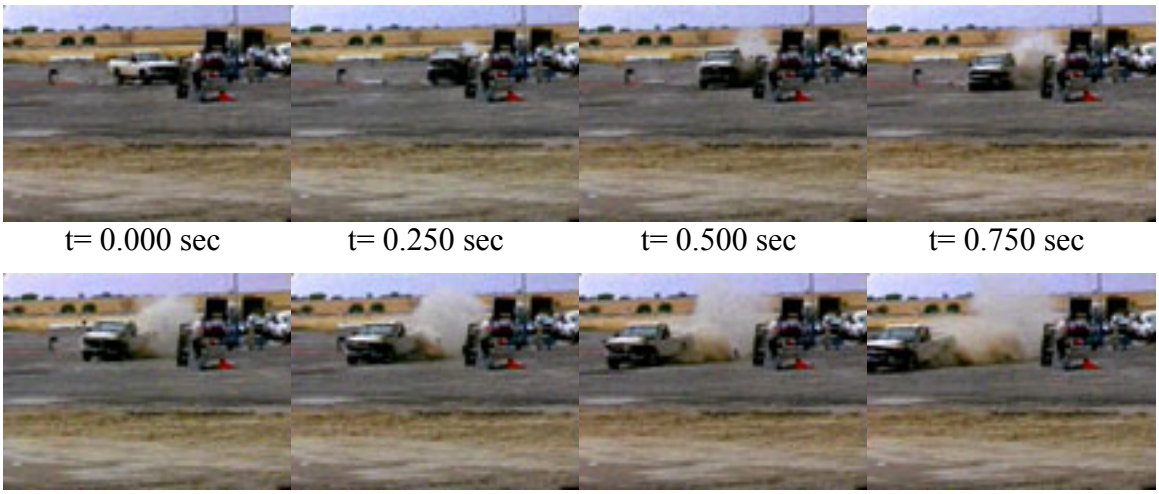

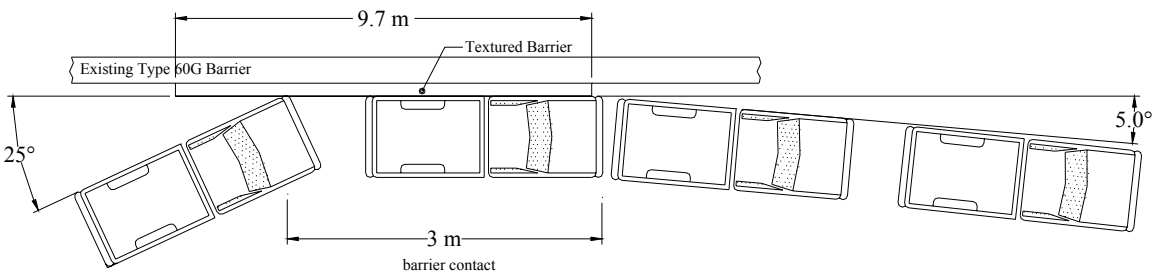

Figure 2-37 Impact sequence and diagram for Test 585

Test Barrier: Type: 1422-mm high, deep cobble-reveal textured barrier with a Type 60 profile
Length: 9.75-m total length.
Test Date: June 27, 2001
Test Vehicle: Model: 1990 Chevrolet 2500
Inertial Mass: 1958 kg
Impact / Exit Velocity: 99.2 km/h / 71.7 km/h
Impact / Exit Angle: 24.3° / < 3°
Test Dummy: None used
Test Data: Occ. Impact Velocity (Long / Lat): 6.83 m/s / -7.57 m/s
Ridedown Acceleration (Long / Lat): -12.26 g / 12.35 g
ASI: 1.97
Exterior: VDS[3]/CDC[4] LFQ-4, LD-2 / 11LDAS3
Interior: OCDI[1] 2011101
Barrier Damage: Very minor scraping of the sandblast and cobblestone surfaces. No chipping or gouging was observed. The barrier would not require immediate repair.

2.2.5.2. Test 585 Vehicle Damage

The left front quarter section of the vehicle was moderately damaged in the initial impact with the barrier. The left front fender, hood, bumper, headlamp area, grille, and suspension components were all affected. The driver side doorframe was deformed outward but the door remained latched. Some minor damage along the left side of the vehicle and to the left rear quarter panel occurred as the vehicle continued to engage the barrier after the initial impact. The left front rim was damaged, however the tire remained inflated. The force of the initial impact drove the left front tire and rim assembly rearward into the underside of the driver side floorboard. This caused some deformation (buckling) of the floorboard, which did not exceed 98 mm. This was within the accepted limit of 150 mm. Compare Figure 2-38 and Figure 2-39.

The longitudinal occupant impact velocity and longitudinal occupant ridedown acceleration were well below the allowed maximums of 12 m/s and 20 *g*, respectively. The longitudinal occupant impact velocity was 6.83 m/s and the longitudinal occupant ridedown acceleration was -12.26 *g*. Test results are summarized in Table 2-8 on page 65.

Figure 2-38 Interior and floorboard of test vehicle prior to Test 585

Figure 2-39 Floorboard of test vehicle after Test 585

2.2.5.3. Test 585 Barrier Damage

There was essentially no permanent damage to the barrier. The vehicle caused very minor scraping of the sandblast and cobblestone surfaces. No chipping or gouging was observed. The barrier would not require immediate repair.

2.2.6. Test 586

2.2.6.1. Test 586 Impact Description

During Test 586 the vehicle became unstable and subsequently detached from the guidance system approximately 30 m prior to the point of impact. The remote brake system was activated but the vehicle had enough momentum that it was unable to stop before impacting the Type 60G barrier about 6 m upstream from the intended impact location on the textured barrier. There was no damage to the textured barrier. The vehicle struck the Type 60G barrier at about a 70° angle and at about 70 km/h. The vehicle was a total loss and the test was rescheduled for one week later as Test 587 with a different test vehicle.

2.2.7. Test 587

2.2.7.1. Test 587 Impact Description

The impact angle was set to 25° by placement of the guide rail while film analysis indicates the actual angle was 23.6°. The impact speed of 101.1 km/h was obtained by an average of two different speed traps located just upstream from the impact point. The test vehicle impacted the barrier 1.2 m downstream of the leading edge of the barrier as intended. There was moderate deformation to the left front corner of the vehicle as it impacted and began to yaw slightly right (positive). At 0.08 seconds after impact the upper section of the driver side door frame was deformed outward to a maximum opening of about 235 mm. The back left side of the vehicle contacted the barrier 0.20 seconds after the initial impact. This secondary impact by the rear of the vehicle caused slight damage to the left rear quarter section of the vehicle and halted the positive yaw of the vehicle. The vehicle had a slight degree of positive pitch (nose up) at this point, which did not exceed 2°. The maximum roll was less than 4° (to the left) as the right-side tires briefly lost contact with the ground approximately 0.27 seconds after impact. At 0.30 seconds after initial impact the vehicle lost contact with the barrier at which time the exit speed was determined through film analysis to be 75.8 km/h and the exit angle was less than 2°. As the vehicle lost contact with the barrier, the rear wheels were still off the ground which resulted in a maximum pitch (nose down) of about 5°. The brakes were applied 1.7 seconds after the initial impact as indicated by the firing of the brake flash mounted on top of the vehicle. The vehicle swerved slightly right after it lost contact with the test article and came to rest in an open area approximately 40 m downstream from the end of the barrier. Figure 2-40 through Figure 2-44 show the pre-test and post-test condition of the test vehicle and test article. Sequence photographs of the impact for Test 587 are shown as Figure 2-45 on the data summary sheet on page 42.

Figure 2-40 Test 587 at impact

Figure 2-41 Test vehicle for Test 587

Figure 2-42 Test vehicle after Test 587

Figure 2-43 Drystack test article prior to Test 587

Figure 2-44 Drystack test article after Test 587

Data Summary Sheet

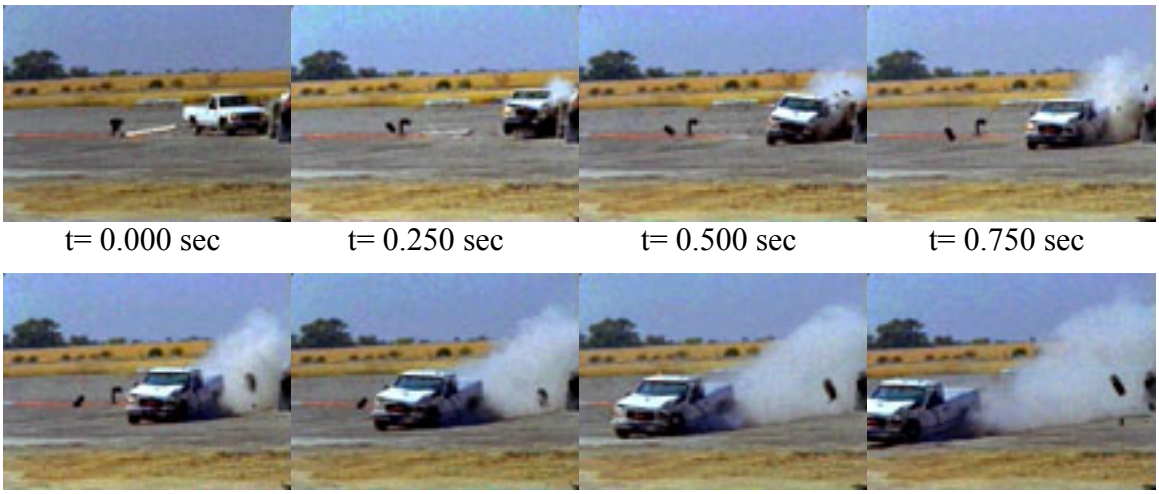

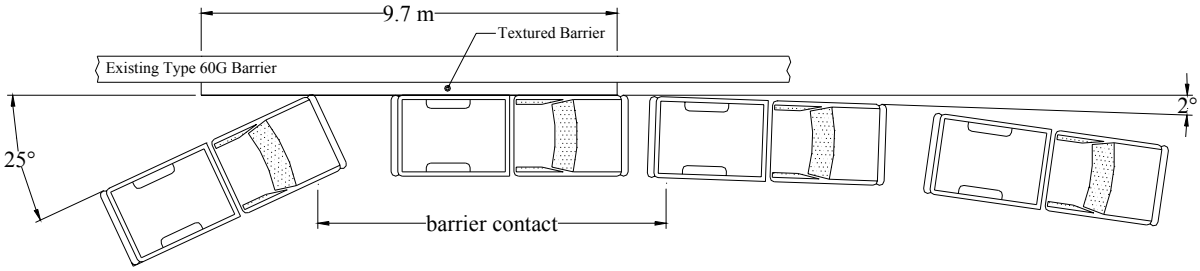

Figure 2-45 Impact sequence and diagram for Test 587

Test Barrier: Type: 1422-mm high, dry stack stone textured barrier with a Type 60 profile
Length: 9.75-m total length.

Test Date: July 25, 2001

Test Vehicle: Model: 1998 GMC 2500
Inertial Mass: 2027 kg
Impact / Exit Velocity: 101.1 km/h / 75.8 km/h
Impact / Exit Angle: 23.6° / < 2°

Test Dummy: None used

Test Data: Occ. Impact Velocity (Long / Lat): 7.02 m/s / -8.21 m/s
Ridedown Acceleration (Long / Lat): -13.60 g / 11.55 g
ASI: 1.68
Exterior: VDS(3)/CDC(4) LFQ-5, LD-1 / 11LDAS3
Interior: OCDI(1) 0010010

Barrier Damage: Very minor scraping of the "stone" surface. No chipping or gouging was observed. The barrier would not require immediate repair. The barrier would not require immediate repair.

2.2.7.2. Test 587 Vehicle Damage

The left front corner of the vehicle was moderately damaged in the initial impact with the barrier. The left front fender, hood, bumper, headlamp area, grille, and suspension components were all affected. The driver side doorframe was deformed slightly and buckled outward. Both doors and the hood remained latched. The left front tire was ruptured. There was minor damage along the left side of the vehicle and to the left rear quarter. The left front wheel assembly was pushed rearward which resulted in moderate deformation of the floorboard. The maximum amount of passenger compartment deformation, 171 mm, occurred behind the parking brake pedal in the upper left corner of the footwell area. While this is over the accepted limit of 150 mm, it is in an area where a driver's foot is not likely to be located. The area of the floorboard where the driver's feet would more likely be located was deformed a maximum of 102 mm.

The longitudinal occupant impact velocity and longitudinal occupant ridedown acceleration were well below the allowed maximums of 12 m/s and 20 *g*, respectively. The longitudinal occupant impact velocity was 7.02 m/s and the longitudinal occupant ridedown acceleration was -13.60 *g*. Test results are summarized in Table 2-9 on page 66.

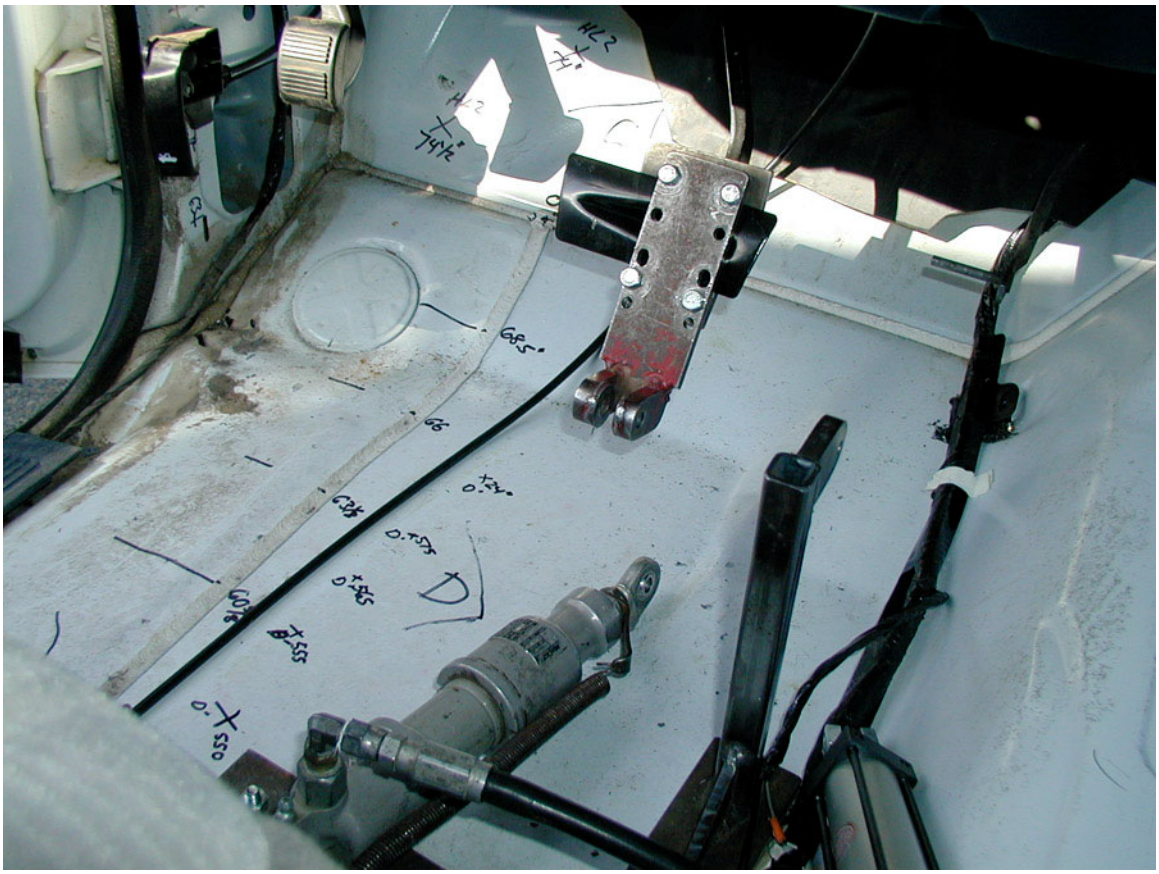

Figure 2-46 Vehicle floorboard prior to Test 587

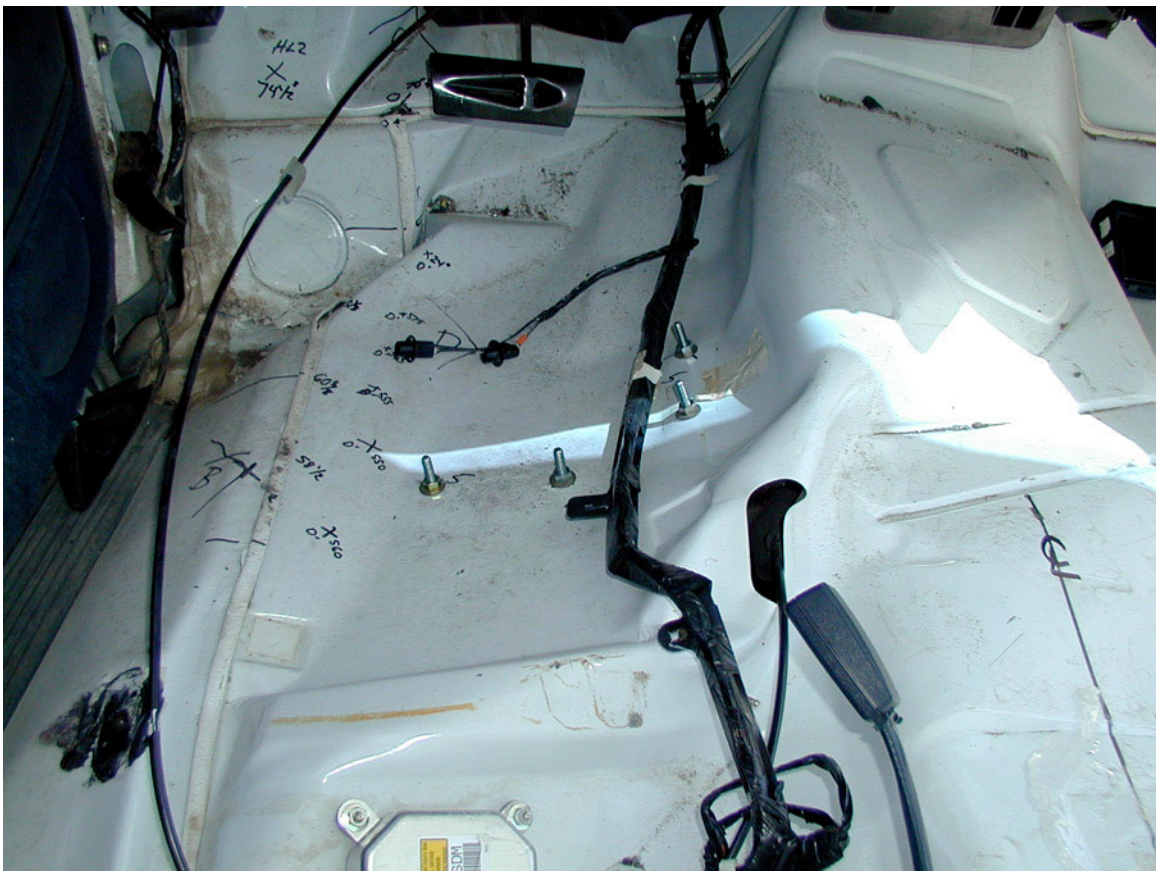

Figure 2-47 Vehicle floorboard after Test 587

2.2.7.3. Test 587 Barrier Damage

There was essentially no permanent damage to the barrier during Test 587. The vehicle did cause minor scrapes and gouges in the concrete surface of the barrier. The barrier would not require immediate repair. The gouges and scrapes could be repaired on-site by maintenance crews.

2.2.8. Test 588

2.2.8.1. Test 588 Impact Description

The impact angle was set to 25° by placement of the guide rail and high-speed film analysis indicated the actual impact angle was 24°. The impact speed of 100.3 km/h was obtained by an average of two different speed traps located just upstream from the impact point. The test vehicle impacted the barrier 2.4 m downstream of the leading edge of the barrier as intended. The left front corner of the vehicle began to deform and the vehicle began to yaw slightly right (positive) as the impact progressed. At 0.08 seconds after impact the upper section of the driver side door frame was deformed outward to a maximum opening of about 209 mm.

The back left side of the vehicle contacted the barrier approximately 0.20 seconds after the initial impact. This secondary impact by the rear of the vehicle caused slight damage to the left rear quarter section of the vehicle. This slowed the positive yaw of the vehicle and also initiated a slight degree of positive pitch (nose up) to a maximum of 3.5°. The maximum roll was less than 8° as the right-side tires briefly lost contact with the ground approximately 0.26 seconds after impact. At 0.26 seconds after initial impact the vehicle lost contact with the barrier at which time the exit speed was determined through film analysis to be 79.0 km/h and the exit angle was less than 2°. The left-side tires briefly lost contact with the pavement but the duration could not be determined due to dust and debris obscuring the view on the high-speed film. The right front tire regained contact with the pavement at 0.59 seconds after impact and the right rear regained contact immediately afterward. The vehicle was smoothly redirected into the run-out area. The brakes were applied more than 2.3 seconds after the initial impact. The vehicle came to rest in an open area approximately 40 m downstream from the end of the barrier. Figure 2-48 through Figure 2-52 show the pre-test and post-test condition of the test vehicle and test article. Sequence photographs of the impact for Test 588 are shown as Figure 2-53 on the data summary sheet on page 48.

Figure 2-48 Test 588 at impact

Figure 2-49 Test vehicle for Test 588

Figure 2-50 Test vehicle after Test 588

Figure 2-51 Fractured Granite test article prior to Test 588

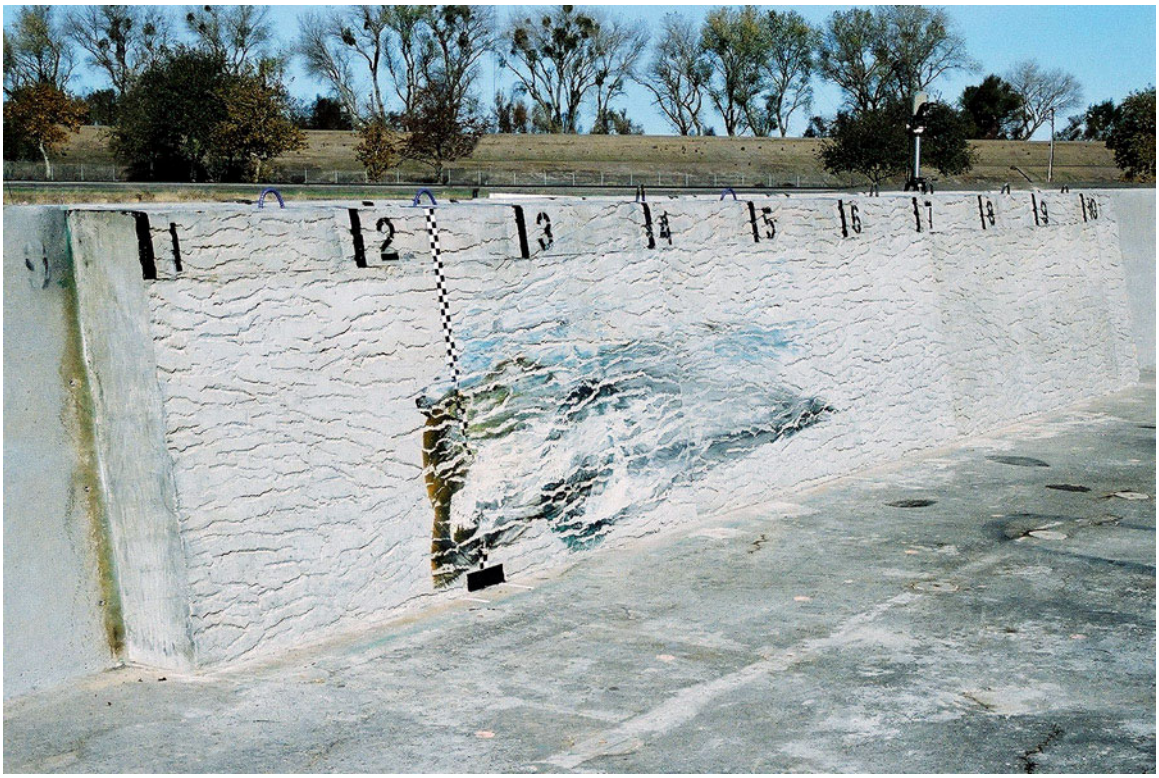

Figure 2-52 Fractured Granite test article after Test 588

Data Summary Sheet

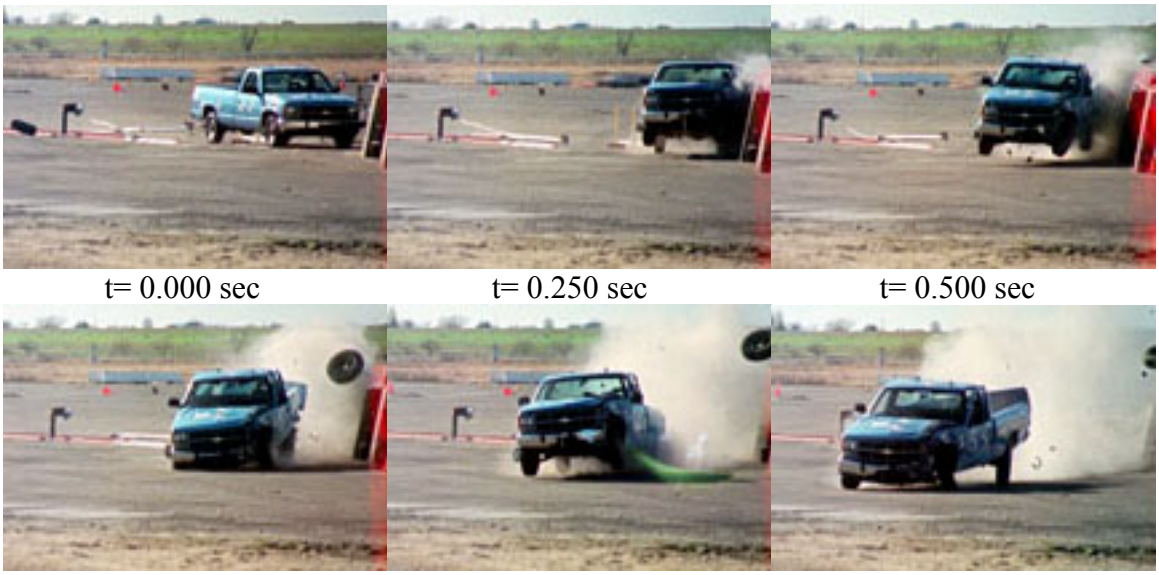

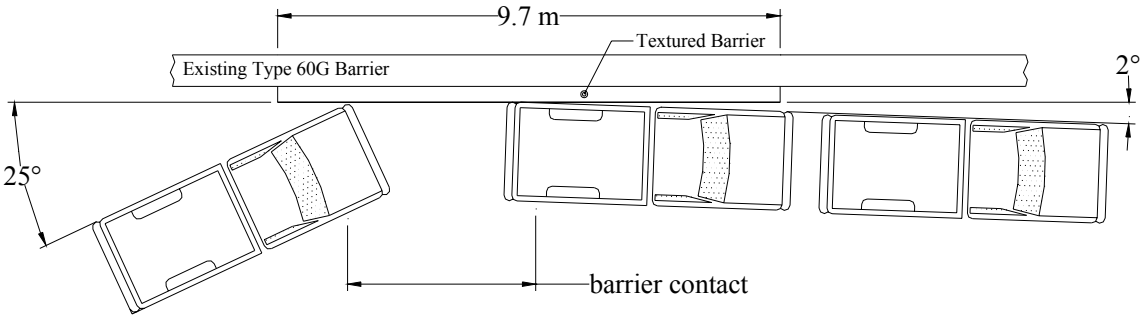

Figure 2-53 Impact sequence and diagram for Test 588

Test Barrier: Type: 1422-mm high, fractured granite textured barrier with a Type 60 profile
Length: 9.75-m total length.
Test Date: November 27, 2001
Test Vehicle: Model: 1994 Chevrolet 2500
Inertial Mass: 1965 kg
Impact / Exit Velocity: 100.3 km/h / 79.0 km/h
Impact / Exit Angle: 25.0° / < 2°
Test Dummy: None used
Test Data: Occ. Impact Velocity (Long / Lat): 6.28 m/s / -9.03 m/s
Ridedown Acceleration (Long / Lat): -14.56 g / 9.39 g
ASI: 2.15
Exterior: VDS[3]/CDC[4] LFQ-5, LD-3 / 11LDAS3
Interior: OCDI[1] 0113000
Barrier Damage: Very minor scraping of the "stone" surface. Minor chipping and gouging. The barrier would not require immediate repair.

2.2.8.2. Test 588 Vehicle Damage

The left front corner of the vehicle was moderately damaged in the initial impact with the barrier. The left front fender, hood, bumper, headlamp area, grille, and suspension components were all affected. The driver side doorframe was deformed slightly and buckled outward. Both doors and the hood remained latched. The left front tire was ruptured. There was minor damage along the left side of the vehicle and to the left rear quarter. The force of the initial impact drove the left front tire and rim assembly rearward into the underside of the driver side floorboard. This caused some deformation (buckling) of the floorboard which did not exceed 134 mm. This was within the accepted limit of 150 mm.

The longitudinal occupant impact velocity and longitudinal occupant ridedown acceleration were well below the allowed maximums of 12 m/s and 20 *g*, respectively. The longitudinal occupant impact velocity was 6.28 m/s and the longitudinal occupant ridedown acceleration was -14.56 *g*. Test results are summarized in Table 2-10 on page 67.

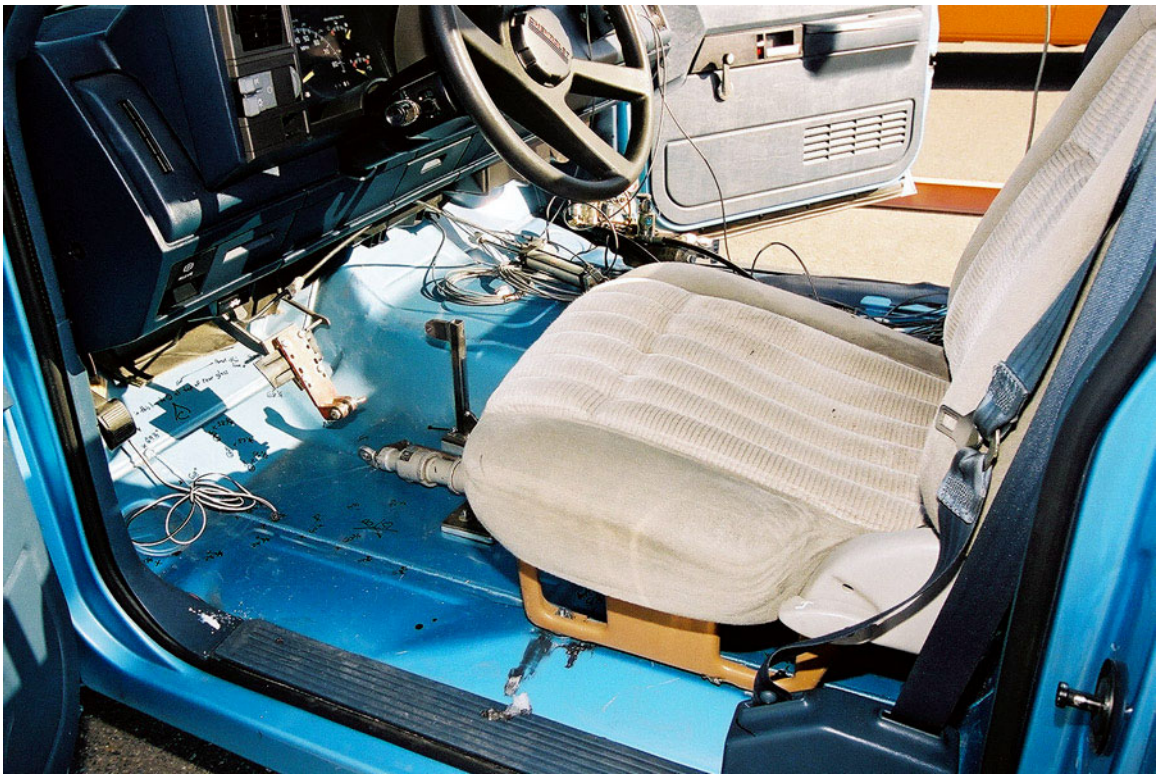

Figure 2-54 Vehicle floorboard prior to Test 588

Figure 2-55 Vehicle floorboard after Test 588

2.2.8.3. Test 588 Barrier Damage

There was essentially no permanent damage to the barrier during Test 588. The vehicle did cause minor scrapes and gouges in the concrete surface of the barrier. The barrier would not require immediate repair and the gouges and scrapes could be filled on-site by maintenance crews.

2.2.9. Test 589

2.2.9.1. Test 589 Impact Description

The impact angle was set at 25° by placement of the guide rail. Film analysis indicated that the impact angle was 23.6°. The impact speed of 100.8 km/h was obtained by an average of two different speed traps located just upstream from the impact point. The test vehicle impacted the barrier 1.2 m downstream of the leading edge of the barrier as intended. The left front corner of the vehicle began to deform and the vehicle began to yaw right (positive) as the impact progressed. At 0.1 seconds after impact the upper section of the driver side door frame was deformed outward to a maximum opening of 225 mm. The vehicle attained a slight degree of positive pitch (nose up) to a maximum of 2.6° at 0.18 seconds. The back left side of the vehicle contacted the barrier at 0.2 seconds after the initial impact. This secondary impact by the rear of

the vehicle damaged the left rear quarter section while essentially stopping the positive yaw of the vehicle. The maximum roll was less than 5.3° as the left side of the vehicle climbed a short distance up the face of the barrier approximately 0.22 seconds after impact. At 0.3 seconds after initial impact the vehicle lost contact with the barrier. The exit speed was determined through film analysis to be 76.7 km/h and the exit angle was less than 3.3°. The front tires regained contact with the pavement at 0.53 seconds after impact and the rear tires touched down about 0.2 seconds later. The vehicle was redirected and completed a 180° spin as it continued into the run-out area. The brakes were applied 1.1 seconds after the initial impact as indicated by the firing of the brake flash mounted on top of the vehicle. The vehicle came to rest in an open area approximately 30 m downstream from the end of the barrier. Figure 2-56 through Figure 2-60 show the pre-test and post-test condition of the test vehicle and test article. Sequence photographs of the impact for Test 589 are shown as Figure 2-61 on the data summary sheet on page 54.

Figure 2-56 Test 589 (0.2 seconds after impact)

Figure 2-57 Test vehicle for Test 589

Figure 2-58 Test vehicle after Test 589

Figure 2-59 Shallow cobblestone test article prior to Test 589

Figure 2-60 Shallow cobblestone test article after Test 589

Data Summary Sheet

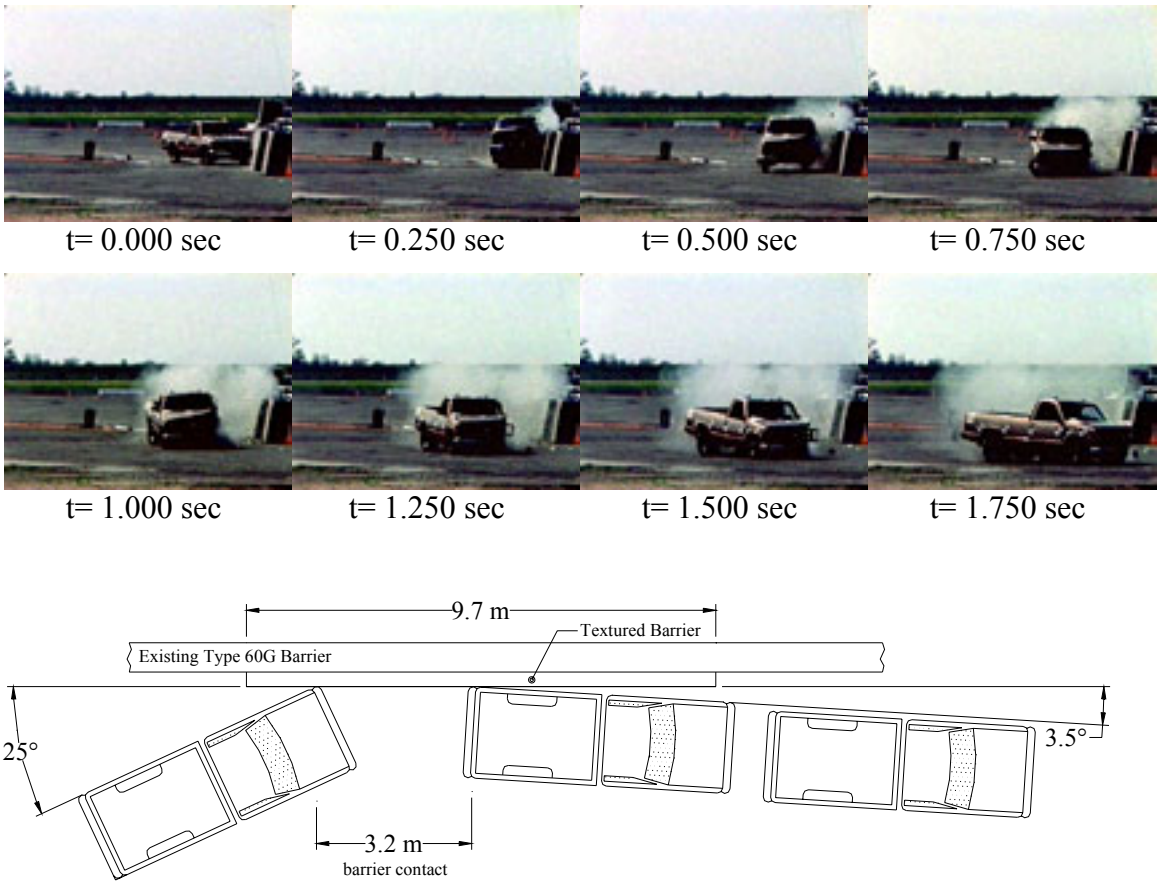

Figure 2-61 Impact sequence and diagram for Test 589

Test Barrier: Type: 1422-mm high, Shallow Cobble textured barrier with a Type 60 profile
Length: 9.75-m total length.

Test Date: March 20, 2002

Test Vehicle: Model: 1994 GMC 2500
Inertial Mass: 2000 kg
Impact / Exit Velocity: 100.0 km/h / km/h
Impact / Exit Angle: 25.0° / < 6°

Test Dummy: None used

Test Data: Occ. Impact Velocity (Long / Lat): 6.93 m/s / -7.41 m/s
Ridedown Acceleration (Long / Lat): -12.84 g / 9.65 g
ASI: 1.77
Exterior: VDS(3)/CDC(4) LFQ-5, LD-2 / 11LDAS3
Interior: OCDI(1) 0112100

Barrier Damage: Minor scraping of the "stone" surface. No chipping or gouging was observed. The barrier would not require immediate repair. The barrier would not require immediate repair.

2.2.9.2. Test 589 Vehicle Damage

The left front corner of the vehicle was moderately damaged in the initial impact with the barrier. The left front fender, hood, bumper, headlamp area, grille, and suspension components were all affected. The driver side doorframe was deformed slightly and buckled outward. Both doors and the hood remained latched. The left front tire was ruptured. There was moderate damage along the left side of the vehicle and to the left rear quarter. The left side of the rear axle broke loose from the leaf spring mount and was pushed rearward. This allowed the drive shaft to disengage from the rear of the transmission and drag along the ground. This situation has resulted in rollover exit trajectories in other crash tests using a similar 2000P vehicle.

The force of the initial impact drove the left front tire and rim assembly rearward into the underside of the driver side floorboard. This caused a maximum floorboard deformation (buckling) of 133 mm which is less than the accepted limit of 150 mm.

The longitudinal occupant impact velocity and longitudinal occupant ridedown acceleration were well below the allowed maximums of 12 m/s and 20 *g*, respectively. The longitudinal occupant impact velocity was 6.93 m/s and the longitudinal occupant ridedown acceleration was -12.84 *g*. Test results are summarized in Table 2-10 on page 68.

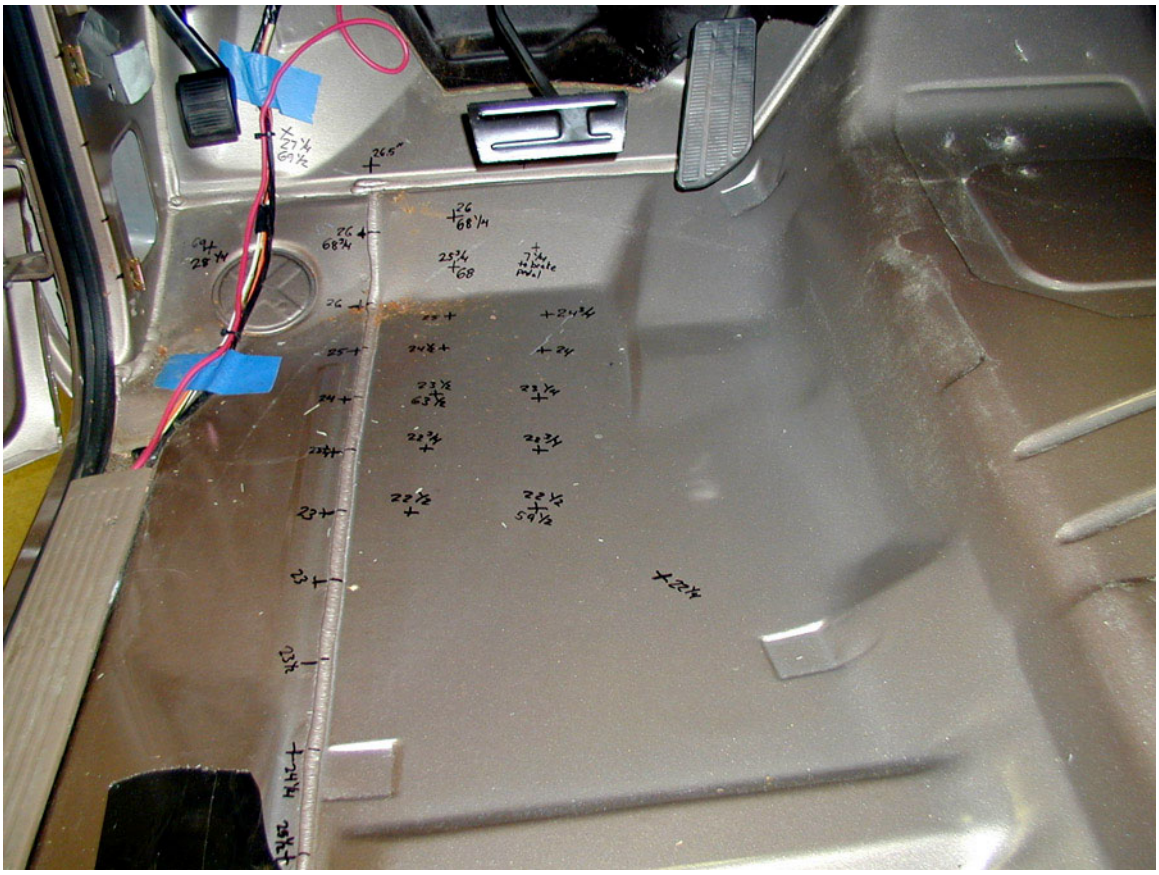

Figure 2-62 Vehicle floorboard prior to Test 589

Figure 2-63 Vehicle floorboard after Test 589

2.2.9.3. Test 589 Barrier Damage

There was essentially no permanent damage to the barrier during Test 589. The vehicle did cause minor scrapes and gouges in the concrete surface of the barrier. The barrier would not require immediate repair and the gouges and scrapes could be filled on-site by maintenance crews.

2.3. Discussion of Test Results - Crash Tests

2.3.1. General - Evaluation Methods (Tests 581 through 589)

NCHRP Report 350 stipulates that crash test performance be assessed according to three evaluation factors: 1) Structural Adequacy, 2) Occupant Risk, and 3) Vehicle Trajectory. These evaluation factors are further defined by evaluation criteria and are shown for each test designation in Table 5.1 of NCHRP Report 350. Tests 581, 582, and 584 of this report have an NCHRP Report 350 test designation of 3-10 (820C vehicle). Tests 583, 585, 587, 588, and 589 have an NCHRP Report 350 test designation of 3-11 (2000P vehicle).

2.3.2. Structural Adequacy

The structural adequacy for all of the various textured barriers was acceptable. All of the vehicles were redirected and no test article allowed the vehicle to penetrate, underride, or override. A detailed assessment summary of structural adequacy is shown in Table 2-4 through Table 2-11.

2.3.3. Occupant Risk

None of the barriers tested showed potential for detached elements, fragments, or other debris that would pose a risk to occupants or others.

The occupant risk for the Mission Arch, Cobble Reveal, Drystack, and Fractured Granite textured barriers was acceptable. The Fluted Rib was unacceptable due to vehicle rollover. The Deep Cobblestone was marginally acceptable with the 820C vehicle and was unacceptable with the 2000P vehicle due to excessive floorboard deformation. The Shallow Cobblestone was unacceptable with the 2000P vehicle due to rear wheel snagging accompanied by severance of the connection between the driveshaft and the transmission. This posed an unacceptable risk of vehicle rollover.

All of the barriers tested (both acceptable and those found unacceptable for other reasons) had occupant impact velocities and occupant ridedown acceleration values that were at or below the "preferred" limits shown in Table 5.1 of NCHRP Report 350.

Please refer to Table 2-4 through Table 2-11 for a detailed assessment summary of occupant risk.

2.3.4. Vehicle Trajectory

The post-impact vehicle trajectory was acceptable for all tests in that the vehicle did not intrude into adjacent traffic lanes and the exit angles were all below 60% of the impact angle. The detailed assessment summary of vehicle trajectories may be seen in Table 2-4 through Table 2-11. Vehicle trajectories and speeds are summarized in Table 2-12.

2.3.5. Discussion of Individual Test Results

2.3.5.1. Test 581

This cobblestone pattern was chosen because designers within Caltrans had a need for an aesthetic texture to match cobblestone patterns that were already existing in the field in other areas. It was also chosen because it was thought to be one of the "worst case" patterns for potential snagging of the vehicle and would therefore set a baseline.

The 820C vehicle performed well and the test was deemed successful. While the floorboard deformation of 105 mm was under the accepted 150-mm limit, it was high enough for a unibody-type vehicle to raise concerns about a 2000P vehicle impacting the same barrier. The results of this test led to the decision to change the testing schedule to include a 2000P test vehicle with this deep cobblestone texture as the test article. This was scheduled as Test 583.

2.3.5.2. Test 582

This fluted rib pattern was chosen because it is typical of the architectural style found on structures and walls within the state highway system. It was decided to angle the flutes with a 45° upward slope (in relation to the normal flow of traffic). This was done to determine if such angled patterns would contribute significantly to the ability of the vehicle to climb the barrier.

The 820C vehicle began to climb the barrier immediately after impact and continued to almost the full height of the barrier. The vehicle had rolled nearly 90° right when it lost contact with the barrier at which point it rolled back to the left and yawed 90° right before landing. This caused the vehicle to initiate a left roll that lasted for two full revolutions.

It was obvious from this test that any kind of long, upward-sloping edges or ridges on a textured surface should not be permitted. Moreover, ribbed patterns did not appear to be a practical option for a barrier due to the extent and visibility of the damage resulting from vehicle impact.

2.3.5.3. Test 583

This test was basically a retest of Test 581 except that a 2000P test vehicle was used instead of an 820C. This test was done based solely on the results of the floorboard deformation observed in Test 581.

The 2000P vehicle performed well in this test with regard to vehicle trajectory, occupant impact velocity, and ridedown acceleration. Subsequent measurements of the floorboard deformation, however, indicated that this test was unsuccessful. The maximum floorboard deformation exceeded the 150 mm acceptable limit and was in an area that could pose a significant risk to the lower extremities of a driver.

The maximum relief of 64 mm of this deep cobblestone texture was clearly excessive for that portion of a barrier where wheel snagging can occur. It was determined that further testing of a cobblestone pattern on the lower face of the barrier would be conducted only if one could be found with a substantially lower relief. This led to the cobblestone pattern used in Test 589.

2.3.5.4. Test 584

Test 584 used a design developed by the Roadside Safety Technology Branch to determine an acceptable relief depth for simple geometric patterns. The Mission Arch design was chosen because it could be used in many of the areas throughout California that have a Spanish influence. This design utilized an arch shape with a "heavy" sandblast texture inset 25 mm into the face of the barrier which had a "light" sandblast texture. The transition from the inset to the barrier face on all sides of the arch shape was beveled at 45° to minimize the potential for snagging.

The 820C vehicle performed well during and the test was deemed successful. The results of this test led to the requirement that images or geometric patterns be inset into the face of the barrier 25 mm or less, and such features shall be 45-degree or flatter with chamfered or beveled edges to prevent wheel snagging, especially on the downstream edges.

2.3.5.5. Test 585

This test utilized a band of the same cobblestone texture as Test 581 along the top edge of the barrier, while the lower 610 mm was covered with a light sandblast texture. This was chosen to give designers the cobblestone "look" while eliminating the potential for snagging of the wheel and subsequent excessive floorboard deformation.

The 2000P vehicle performed well and the test was considered successful. There was approximately 98 mm of floorboard deformation in this test while the full cobble pattern of Test 583 caused more than 150 mm of deformation.

The results of this test indicated that a broad range of textures (even one as aggressive as the deep cobble pattern) can be used above 610 mm as long as the lower portion of the barrier is kept relatively smooth.

2.3.5.6. Test 586

This test was unsuccessful due to loss of guidance of the test vehicle and subsequent damage when it impacted an un-textured section of the Type 60G which was being used as a "base" for the intended Drystack test article. This test was re-run one week later as Test 587 with a different test vehicle.

2.3.5.7. Test 587

Test 587 used a Drystack stone texture. This pattern has random sized stones with mortar joints that are approximately 25 mm wide. Across many of these mortar joints adjacent stones may have an offset of up to 5 mm from each other. In addition, the stones have an uneven cut which may vary 10 mm across the face of the stone.

The 2000P vehicle performed well and the test was considered successful. There was approximately 171 mm of floorboard deformation. This deformation exceeded the 150 mm acceptable limit but it occurred an the area under the parking brake pedal, where a driver's lower extremities are not likely to be located.

The results of this test indicated that textured patterns can have gaps, slots, grooves, or joints of any depth with a maximum width of 20 mm and that the maximum surface differential across such features shall be 5 mm or less.

2.3.5.8. Test 588

Test 588 involved a textured pattern referred to as Stone Ground Fractured Granite. This pattern has a large percentage of the barrier which is flush with the outside face. There is a random pattern of "valleys" that are up to 13-mm deep and 25-mm wide. The edges of these "valleys" (when transitioning from the barrier face to the "floor") vary from nearly vertical to gently sloping. The pattern was placed so that the long axis of the "valleys" was generally parallel to the flow of traffic (horizontal). This pattern was selected to further investigate some of the findings of the Mission Arch, Test 584. That pattern consisted of fixed geometric shapes with beveled edges inset a known distance into the face of the barrier. The Stone Ground Fractured Granite pattern is much more random in the layout of the geometric pattern and more varied in the depth of relief.

The 2000P vehicle performed well and the test was deemed successful. There was approximately 133 mm of floorboard deformation.

This test led to the determination that textures or patterns of any shape and length can be inset into the face of the barrier up to 13 mm, that the texture or pattern shall have a maximum width of 25 mm, and the edges of the inset area can range from vertical to a gentle slope.

2.3.5.9. Test 589

This is a shallow cobblestone pattern (as compared to that used in Tests 581 and 583). It was chosen because designers within Caltrans still had a need for an aesthetic texture to match cobblestone patterns already in the field. It had a maximum relief of 20 mm, while the "deep" cobblestone pattern had a maximum relief of 64 mm.

In the initial impact with the barrier there was some front wheel snagging resulting in a fairly substantial floorboard deformation of 133 mm. The test was ultimately deemed unsuccessful based on the fact that the left rear wheel assembly snagged on the cobblestone wall. This pulled the left side of the rear axle back far enough to allow the driveshaft to disengage from the transmission. In testing done for other projects this sequence of events has led to "pole-vaulting" and vehicle rollover.

2.3.5.10. General Results

All of the tests mentioned above, those that were successful and those that were not, were used to develop the guidelines that are listed in the "Recommendations" section that follows this discussion. While the testing was not exhaustive, it was sufficient to develop the guidelines presented here. Further testing at some point in the future could help expand these guidelines to cover a broader range of textures and patterns. Adherence to these guidelines will result in crashworthy barriers that meet NCHRP Report 350 criteria. However, it should be noted that texturing increases barrier surface roughness and therefore the amount of friction between the barrier and the impacting vehicle. This may result in more vehicle body damage and greater occupant ridedown acceleration relative to a smooth concrete barrier.

Table 2-4 - Test 581 Assessment Summary

Test No. 581 - Deep Cobblestone with 820C
Date March 14, 2001
Test agency California Dept. of Transportation

Evaluation Criteria	Test Results	Assessment
Structural Adequacy		
A. Test article should contain and redirect the vehicle; the vehicle should not penetrate, underride, or override the installation although controlled lateral deflection of the article is acceptable.	The vehicle was contained and smoothly redirected	pass
Occupant Risk		
D. Detached elements, fragments or other debris from the test article should not penetrate or show potential for penetrating the occupant compartment, or present an undue hazard to other traffic, pedestrians, or personnel in a work zone. Deformation of, or intrusions into, the occupant compartment that could cause serious injuries should not be permitted.	Only moderate amounts of scraping and gouging were created during impact. There was no significant debris from the vehicle.	pass
	The amount of floorboard deformation was acceptable.	pass
	There was moderate occupant compartment deformation.	pass
F. The vehicle should remain upright during and after collision although moderate roll, pitching, and yawing are acceptable.	The observed levels of roll, pitch, and yaw were deemed acceptable.	pass
H. Occupant impact velocities should satisfy the following limits (m/s): Preferred / Maximum; Longitudinal and Lateral: 9 / 12	Long. Occ. Impact Vel. = 5.62 m/s	pass
	Lateral Occ. Impact Vel. = -6.81 m/s	pass
I. Occupant ridedown accelerations should satisfy the following limits (G's): Preferred / Maximum; Longitudinal and Lateral: 15 / 20	Long. Occ. Ridedown = -7.96 g	pass
	Lateral Occ. Ridedown = 9.22 g	pass
Vehicle Trajectory		
K. After collision it is preferable that the vehicle's trajectory not intrude into adjacent traffic lanes.	The vehicle maintained a relatively straight course after exiting the barrier.	pass
M. The exit angle from the test article preferably should be less that 60 percent of the test impact angle, measured at time of vehicle loss of contact with test device."	Exit angle = 3.5°, 18% of the impact angle.	pass

Table 2-5 - Test 582 Assessment Summary

Test No. 582 – Fluted Rib at 45° (climb) with 820C
Date March 28, 2001
Test agency California Dept. of Transportation

Evaluation Criteria	Test Results	Assessment
Structural Adequacy		
A. Test article should contain and redirect the vehicle; the vehicle should not penetrate, underride, or override the installation although controlled lateral deflection of the article is acceptable.	The vehicle was contained and smoothly redirected	pass
Occupant Risk		
D. Detached elements, fragments or other debris from the test article should not penetrate or show potential for penetrating the occupant compartment, or present an undue hazard to other traffic, pedestrians, or personnel in a work zone. Deformation of, or intrusions into, the occupant compartment that could cause serious injuries should not be permitted.	Only moderate amounts of scraping and gouging were created during impact. There was no significant debris from the vehicle.	pass
	The amount of floorboard deformation was acceptable.	pass
	There was moderate occupant compartment deformation.	pass
F. The vehicle should remain upright during and after collision although moderate roll, pitching, and yawing are acceptable.	The observed levels of roll, pitch, and yaw were not acceptable.	fail
H. Occupant impact velocities should satisfy the following limits (m/s): Preferred / Maximum; Longitudinal and Lateral: 9 / 12	Long. Occ. Impact Vel. = 5.51 m/s	pass
	Lateral Occ. Impact Vel. = -5.93 m/s	pass
I. Occupant ridedown accelerations should satisfy the following limits (G's): Preferred / Maximum; Longitudinal and Lateral: 15 / 20	Long. Occ. Ridedown = -6.51 g	pass
	Lateral Occ. Ridedown = -6.04 g	pass
Vehicle Trajectory		
K. After collision it is preferable that the vehicle's trajectory not intrude into adjacent traffic lanes.	The vehicle did not maintain a relatively straight course after exiting the barrier.	fail
M. The exit angle from the test article preferably should be less that 60 percent of the test impact angle, measured at time of vehicle loss of contact with test device."	Exit angle = 5°, 25% of the impact angle.	pass

Table 2-6 - Test 583 Assessment Summary

Test No. 583 – Deep Cobblestone with 2000P
Date April 24, 2001
Test agency California Dept. of Transportation

Evaluation Criteria	Test Results	Assessment
Structural Adequacy		
A. Test article should contain and redirect the vehicle; the vehicle should not penetrate, underride, or override the installation although controlled lateral deflection of the article is acceptable.	The vehicle was contained and smoothly redirected	pass
Occupant Risk		
D. Detached elements, fragments or other debris from the test article should not penetrate or show potential for penetrating the occupant compartment, or present an undue hazard to other traffic, pedestrians, or personnel in a work zone. Deformation of, or intrusions into, the occupant compartment that could cause serious injuries should not be permitted.	Only moderate amounts of scraping and gouging were created during impact. There was no significant debris from the vehicle.	pass
	The amount of floorboard deformation was not acceptable.	fail
	There was moderate occupant compartment deformation.	pass
F. The vehicle should remain upright during and after collision although moderate roll, pitching, and yawing are acceptable.	The observed levels of roll, pitch, and yaw were deemed acceptable.	pass
Vehicle Trajectory		
K. After collision it is preferable that the vehicle's trajectory not intrude into adjacent traffic lanes.	The vehicle maintained a relatively straight course after exiting the barrier.	pass
L. The occupant impact velocity in the longitudinal direction should not exceed 12 m/sec and the occupant ridedown acceleration in the longitudinal direction should not exceed 20 g.	Long. Occ. Impact Vel. = 7.43 m/s Long. Occ. Ridedown = -5.97 g	pass
M. The exit angle from the test article preferably should be less that 60 percent of the test impact angle, measured at time of vehicle loss of contact with test device."	Exit angle = 4°, 16% of the impact angle.	pass

Table 2-7 - Test 584 Assessment Summary

Test No. 584 – Mission Arch with 820C
Date May 8, 2001
Test agency California Dept. of Transportation

Evaluation Criteria	Test Results	Assessment
Structural Adequacy		
A. Test article should contain and redirect the vehicle; the vehicle should not penetrate, underride, or override the installation although controlled lateral deflection of the article is acceptable.	The vehicle was contained and smoothly redirected	pass
Occupant Risk		
D. Detached elements, fragments or other debris from the test article should not penetrate or show potential for penetrating the occupant compartment, or present an undue hazard to other traffic, pedestrians, or personnel in a work zone. Deformation of, or intrusions into, the occupant compartment that could cause serious injuries should not be permitted.	Only moderate amounts of scraping and gouging were created during impact. There was no significant debris from the vehicle.	pass
	The amount of floorboard deformation was acceptable.	pass
	There was moderate occupant compartment deformation.	pass
F. The vehicle should remain upright during and after collision although moderate roll, pitching, and yawing are acceptable.	The observed levels of roll, pitch, and yaw were deemed acceptable.	pass
H. Occupant impact velocities should satisfy the following limits (m/s): Preferred / Maximum; Longitudinal and Lateral: 9 / 12	Long. Occ. Impact Vel. = 5.36 m/s	pass
	Lateral Occ. Impact Vel. = -6.70 m/s	pass
I. Occupant ridedown accelerations should satisfy the following limits (G's): Preferred / Maximum; Longitudinal and Lateral: 15 / 20	Long. Occ. Ridedown = -4.07 g	pass
	Lateral Occ. Ridedown = 9.81 g	pass
Vehicle Trajectory		
K. After collision it is preferable that the vehicle's trajectory not intrude into adjacent traffic lanes.	The vehicle maintained a relatively straight course after exiting the barrier.	pass
M. The exit angle from the test article preferably should be less that 60 percent of the test impact angle, measured at time of vehicle loss of contact with test device."	Exit angle = 7°, 36% of the impact angle.	pass

Table 2-8 - Test 585 Assessment Summary

Test No. 585 Deep Cobblestone Reveal with 2000P
Date June 27, 2001
Test agency California Dept. of Transportation

Evaluation Criteria	Test Results	Assessment
Structural Adequacy		
A. Test article should contain and redirect the vehicle; the vehicle should not penetrate, underride, or override the installation although controlled lateral deflection of the article is acceptable.	The vehicle was contained and smoothly redirected	pass
Occupant Risk		
D. Detached elements, fragments or other debris from the test article should not penetrate or show potential for penetrating the occupant compartment, or present an undue hazard to other traffic, pedestrians, or personnel in a work zone. Deformation of, or intrusions into, the occupant compartment that could cause serious injuries should not be permitted.	Only moderate amounts of scraping and gouging were created during impact. There was no significant debris from the vehicle.	pass
	The amount of floorboard deformation was acceptable.	pass
	There was moderate occupant compartment deformation.	pass
F. The vehicle should remain upright during and after collision although moderate roll, pitching, and yawing are acceptable.	The observed levels of roll, pitch, and yaw were deemed acceptable.	pass
Vehicle Trajectory		
K. After collision it is preferable that the vehicle's trajectory not intrude into adjacent traffic lanes.	The vehicle maintained a relatively straight course after exiting the barrier.	pass
L. The occupant impact velocity in the longitudinal direction should not exceed 12 m/sec and the occupant ridedown acceleration in the longitudinal direction should not exceed 20 g.	Long. Occ. Impact Vel. = 6.83 m/s Long. Occ. Ridedown = -12.26 g	pass
M. The exit angle from the test article preferably should be less that 60 percent of the test impact angle, measured at time of vehicle loss of contact with test device."	Exit angle = 3°, 12% of the impact angle.	pass

Table 2-9 - Test 587 Assessment Summary

Test No. 587 – Drystack with 2000P
Date July 25, 2001
Test agency California Dept. of Transportation

Evaluation Criteria	Test Results	Assessment
Structural Adequacy		
A. Test article should contain and redirect the vehicle; the vehicle should not penetrate, underride, or override the installation although controlled lateral deflection of the article is acceptable.	The vehicle was contained and smoothly redirected	pass
Occupant Risk		
D. Detached elements, fragments or other debris from the test article should not penetrate or show potential for penetrating the occupant compartment, or present an undue hazard to other traffic, pedestrians, or personnel in a work zone. Deformation of, or intrusions into, the occupant compartment that could cause serious injuries should not be permitted.	Only moderate amounts of scraping and gouging were created during impact. There was no significant debris from the vehicle.	pass
	The amount of floorboard deformation was acceptable.	pass
	There was moderate occupant compartment deformation.	pass
F. The vehicle should remain upright during and after collision although moderate roll, pitching, and yawing are acceptable.	The observed levels of roll, pitch, and yaw were deemed acceptable.	pass
Vehicle Trajectory		
K. After collision it is preferable that the vehicle's trajectory not intrude into adjacent traffic lanes.	The vehicle maintained a relatively straight course after exiting the barrier.	pass
L. The occupant impact velocity in the longitudinal direction should not exceed 12 m/sec and the occupant ridedown acceleration in the longitudinal direction should not exceed 20 g.	Long. Occ. Impact Vel. = 7.02 m/s Long. Occ. Ridedown = -13.60 g	pass
M. The exit angle from the test article preferably should be less that 60 percent of the test impact angle, measured at time of vehicle loss of contact with test device."	Exit angle = 2°, 8% of the impact angle.	pass

Table 2-10 - Test 588 Assessment Summary

Test No. 588 – Fractured Granite with 2000P
Date November 27, 2001
Test agency California Dept. of Transportation

Evaluation Criteria	Test Results	Assessment
Structural Adequacy		
A. Test article should contain and redirect the vehicle; the vehicle should not penetrate, underride, or override the installation although controlled lateral deflection of the article is acceptable.	The vehicle was contained and smoothly redirected	pass
Occupant Risk		
D. Detached elements, fragments or other debris from the test article should not penetrate or show potential for penetrating the occupant compartment, or present an undue hazard to other traffic, pedestrians, or personnel in a work zone. Deformation of, or intrusions into, the occupant compartment that could cause serious injuries should not be permitted.	Only moderate amounts of scraping and gouging were created during impact. There was no significant debris from the vehicle.	pass
	The amount of floorboard deformation was acceptable.	pass
	There was moderate occupant compartment deformation.	pass
F. The vehicle should remain upright during and after collision although moderate roll, pitching, and yawing are acceptable.	The observed levels of roll, pitch, and yaw were deemed acceptable.	pass
Vehicle Trajectory		
K. After collision it is preferable that the vehicle's trajectory not intrude into adjacent traffic lanes.	The vehicle maintained a relatively straight course after exiting the barrier.	pass
L. The occupant impact velocity in the longitudinal direction should not exceed 12 m/sec and the occupant ridedown acceleration in the longitudinal direction should not exceed 20 g.	Long. Occ. Impact Vel. = 6.28 m/s Long. Occ. Ridedown = -14.56 g	pass
M. The exit angle from the test article preferably should be less that 60 percent of the test impact angle, measured at time of vehicle loss of contact with test device."	Exit angle = 2°, 8% of the impact angle.	pass

Table 2-11 - Test 589 Assessment Summary

Test No. 589 – Shallow Cobblestone with 2000P
Date March 20, 2002
Test agency California Dept. of Transportation

Evaluation Criteria	Test Results	Assessment
Structural Adequacy		
A. Test article should contain and redirect the vehicle; the vehicle should not penetrate, underride, or override the installation although controlled lateral deflection of the article is acceptable.	The vehicle was contained and smoothly redirected	pass
Occupant Risk		
D. Detached elements, fragments or other debris from the test article should not penetrate or show potential for penetrating the occupant compartment, or present an undue hazard to other traffic, pedestrians, or personnel in a work zone. Deformation of, or intrusions into, the occupant compartment that could cause serious injuries should not be permitted.	Only moderate amounts of scraping and gouging were created during impact. There was no significant debris from the vehicle.	pass
	The amount of floorboard deformation was acceptable.	pass
	There was moderate occupant compartment deformation.	pass
F. The vehicle should remain upright during and after collision although moderate roll, pitching, and yawing are acceptable.	The observed levels of roll, pitch, and yaw were deemed acceptable. The potential for rollover was unacceptable due to driveshaft disengagement from the transmission.	fail
Vehicle Trajectory		
K. After collision it is preferable that the vehicle's trajectory not intrude into adjacent traffic lanes.	The vehicle maintained a relatively straight course after exiting the barrier.	pass
L. The occupant impact velocity in the longitudinal direction should not exceed 12 m/sec and the occupant ridedown acceleration in the longitudinal direction should not exceed 20 g.	Long. Occ. Impact Vel. = 6.93 m/s Long. Occ. Ridedown = -12.84 g	pass
M. The exit angle from the test article preferably should be less that 60 percent of the test impact angle, measured at time of vehicle loss of contact with test device."	Exit angle = 3.3°, 14% of the impact angle.	pass

Table 2-12 - Vehicle Trajectories and Speeds

Test Number	Impact Angle (deg)	60% of Impact Angle (deg)	Exit Angle (deg)	Impact Speed, V_i (km/h)	Exit Speed, V_e (km/h)	Speed Change V_i - V_e (km/h)
581	20.0	12	3.5	97.7	78.0	19.7
582	20.0	12	5.0	96.7	87.4	9.3
583	25.0	15	4.0	100.2	69.5	30.7
584	19.3	12	7.0	95.8	74.4	21.4
585	24.3	15	3.0	99.2	71.7	27.5
587	23.6	15	2.0	101.1	75.8	25.3
588	24.0	15	2.0	100.3	79.0	21.3
589	23.6	15	3.3	100.8	76.7	24.1

3. CONCLUSION

Based on the testing of the various textured barriers discussed in this report, the following conclusions can be drawn:

1. Single slope barriers featuring certain types of textures or patterns will comply with NCHRP Report 350 criteria under TL-3 test conditions. Such textures and patterns are generally low relief and/or feature rounded or beveled leading edges to avoid wheel snagging.

2. High-relief textures and patterns on the lower face of a barrier cause wheel snagging that in turn results in excessive occupant compartment deformation.

3. Textures or patterns on a barrier that feature upward-sloping edges in the direction of travel will contribute to wheel climb and vehicle rollover.

4. RECOMMENDATION

Based on the testing discussed in this report, textures, patterns, or images which meet the guidelines listed below are acceptable for use on single-slope barriers under test level 3 conditions[4].

4.1. Guidelines for architectural treatment of single-slope barriers.

If possible, aesthetic treatment to single slope barriers should be limited to painting or coloring. If physical texturing is to be done, the guidelines listed below shall be followed.

A. Full barrier face coverage:

1. Sandblast textures with a maximum textural relief of 9.5 mm.

2. Images or geometric patterns inset into the face of the barrier 25 mm or less and featuring 45-degree or flatter chamfered or beveled edges to prevent wheel snagging, especially on the downstream edges.

---

[4] This recommendation applies to the single-slope barrier designs used by Caltrans, such as the Type 60 and Type 732/736 barriers and rails with slopes of 9.1 degrees off the vertical. Although other slopes were not specifically tested, this recommendation would logically apply to other steep-sloped or even vertical barriers. The crashworthiness of vertical barriers is likely to be less sensitive to surface texturing than sloped barriers. Even high-relief vertical barriers such as FHWA's Rough Stone Masonry Guardwall have met NCHRP Report 350 TL-3 criteria.

3. Textures or patterns of any shape and length, inset into the face of the barrier up to 13 mm, featuring edges of any slope up to vertical. The texture or pattern shall have a maximum width of 25 mm.

4. Any pattern or texture with gradual undulations that have a maximum relief of 20 mm over a distance of 300 mm.

5. Gaps, slots, grooves or joints of any depth with a maximum width of 20 mm; the maximum surface differential across such features shall be 5 mm or less.

No patterns shall feature any long, upward-sloping edges or ridges that could contribute to wheel climb.

B. Limited to a zone on the barrier face extending from 610 mm above the base of the barrier to the top of the barrier:

1. Any pattern or texture with a maximum relief of 64 mm or less, located in a zone 610 mm or higher above the base of the barrier. The leading edges of this pattern or texture shall be rounded or sloped to minimize the potential for snagging. No part of this pattern or texture shall protrude above the plane of the lower 610 mm of the barrier.

5. IMPLEMENTATION

The Caltrans Division of Design, Office of Landscape Architecture will be responsible for providing guidance to designers on appropriate barrier texturing in at-grade applications. The Division of Engineering Services, Structure Design Services and Earthquake Engineering will provide similar guidance in structural applications, such as bridge rails.

6. REFERENCES

1. “Recommended Procedures for the Safety Performance Evaluation of Highway Features”, Transportation Research Board, National Cooperative Highway Research Program Report 350, 1993.

2. Jewell, John, et al., "Vehicle Crash Tests of a Slip-Formed, Single-Slope, Concrete Median Barrier with Integral Concrete Glare Screen", California Department of Transportation, Report No. FHWA/CA/ESC-98/02, December 1997.

3. “Vehicle Damage Scale for Traffic Accident Investigators”, Traffic Accident Data Project, National Safety Council, 1968.

4. “Collision Deformation Classification” - SAE J224 Mar80, SAE Recommended Practices, 1980.

7. APPENDICES

7.1. Test Vehicle Equipment

The test vehicles were modified as follows for the crash tests:

- The gas tanks on the test vehicles were disconnected from the fuel supply line and drained. A 12 liter safety gas tank was installed in the truck bed or rear cargo area and connected to the fuel supply line. The stock fuel tanks had dry ice or gaseous CO_2 added to purge fuel vapors.

- One 12-volt deep cycle gel cell motorcycle storage battery was mounted in the vehicle. The battery operated the solenoid-valve braking/accelerator system, rate gyros, and the electronic control box. A second 12-volt deep cycle gel cell battery powered the transient data recorder.

- A 4800-kPa CO_2 system, actuated by a solenoid valve, controlled remote braking after impact and emergency braking if necessary. Part of this system was a pneumatic ram that was attached to the brake pedal. The operating pressure for the ram was adjusted through a pressure regulator during a series of trial runs prior to the actual test. Adjustments were made to assure the shortest stopping distance without locking up the wheels. When activated, the brakes could be applied in less than 100 milliseconds.

- The remote brakes were controlled via a radio link transmitter at a console trailer. When the brakes were applied by remote control from the console trailer, the ignition was automatically rendered inoperable by removing power to the coil.

- For all self-propelled vehicle tests (583, 585, 587, 588, and 589) an accelerator switch was located on the rear of the vehicle. The switch opened an electric solenoid, which in turn released compressed CO_2 from a reservoir into a pneumatic ram that had been attached to the accelerator pedal. The CO_2 pressure for the accelerator ram was regulated to the same pressure of the remote braking system with a valve to adjust CO_2 flow rate.

- For all self-propelled vehicle tests (583, 585, 587, 588, and 589), a speed control device, connected in-line with the primary winding of the coil, was used to regulate the speed of the test vehicle based on the signal from a speed sensor output from the vehicle transmission. For the three cable-towed tests (581, 582, and 584) this same speed control device was similarly wired into the ignition system of the tow vehicle. This device was calibrated prior to all tests by conducting a series of trial runs through a speed trap comprised of two tape switches set a specified distance apart and a digital timer.

- For all self-propelled vehicle tests (583, 585, 587, 588, and 589), a microswitch was mounted below the front bumper and connected to the ignition system. A trip plate on the ground near the impact point triggered the switch when the car passed over it. The switch would open the ignition circuit and shut off the vehicle's engine prior to impact.

Table 7-1 through Table 7-8 give specific information regarding vehicle dimensions and weights for Tests 581 through 589.

Table 7-1 Test 581 – Deep Cobble - Vehicle Dimensions

DATE: 14 MAR 2001 **TEST NO:** 581 **VIN NO:** 2C1MT2162M6779757 **MAKE:** Chevrolet

MODEL: Sprint **YEAR:** 1991 **ODOMETER:** 151441 **TIRE SIZE:** P145/80R12

TIRE INFLATION PRESSURE: **LF** 32 **RF** 32 **LR** 32 **RR** 32

MASS DISTRIBUTION (kg) **LF** 224.0 **RF** 238.0 **LR** 182.0 **RR** 179.0

DESCRIBE ANY DAMAGE TO VEHICLE PRIOR TO TEST: Dent in right rear fender – non-impact side and is minor

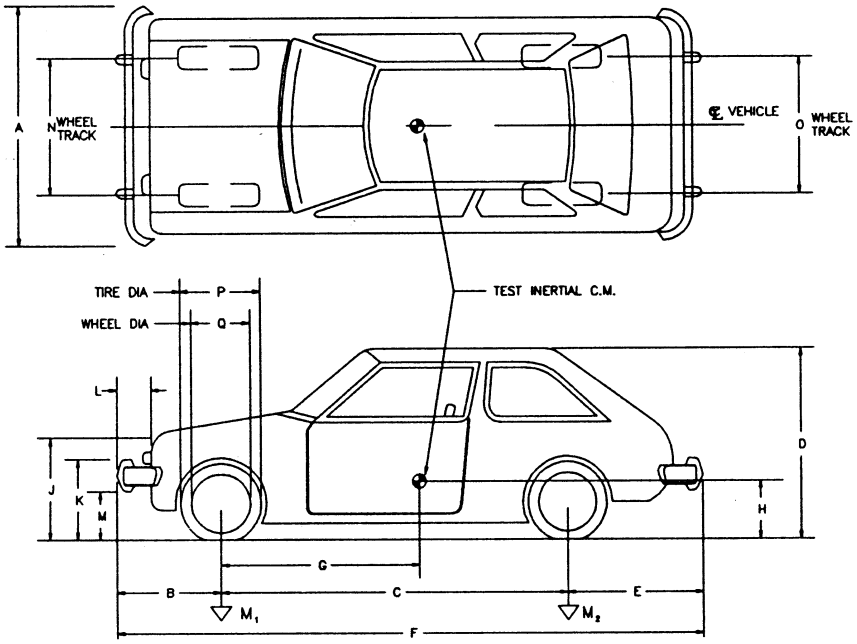

ENGINE TYPE: 3 cylinder

ENGINE: 1000 cc

TRANSMISSION TYPE :

X **AUTO**

____ **MANUAL**

OPTIONAL EQUIPMENT:

None

DUMMY DATA:

TYPE: HYBRID II 50th %

MASS: 75 kg

SEAT POSITION: LEFT FRONT

GEOMETRY (cm)

A 1460	**D** 1345	**G**	**K** 530	**N** 1360	**Q** 330
B 760	**E** 635	**H**	**L** 65	**O** 1345	
C 2265	**F** 3660	**J** 655	**M** 395	**P** 525	

MASS - (kg)	**CURB**	**TEST INERTIAL**	**GROSS STATIC**
M1	443.5	462.0	499.5
M2	303.5	361.0	398.5
MT	747.0	823.0	898.0

Table 7-2 Test 582 – Fluted Rib - Vehicle Dimensions

DATE: 28 MAR 2001 **TEST NO:** 582 **VIN NO:** 2C1MR2468L6008941 **MAKE:** Geo

MODEL: Metro **YEAR:** 1990 **ODOMETER:** 36781 **TIRE SIZE:** P155/R12

TIRE INFLATION PRESSURE: **LF** 32 **RF** 32 **LR** 32 **RR** 32

MASS DISTRIBUTION (kg) **LF** 225.5 **RF** 240.5 **LR** 168.5 **RR** 167.0

DESCRIBE ANY DAMAGE TO VEHICLE PRIOR TO TEST: None

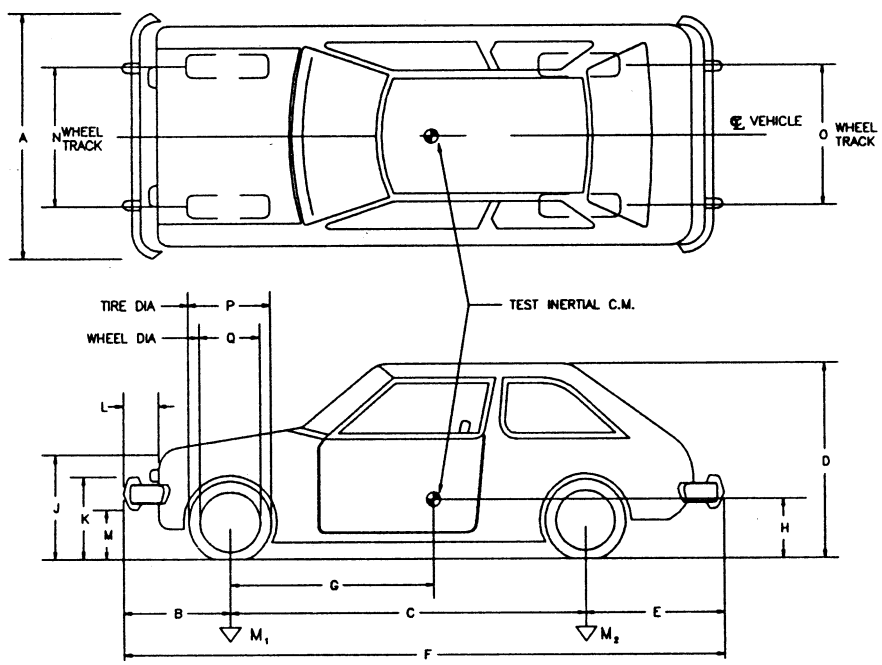

ENGINE TYPE: 3 cylinder

ENGINE: 1000 cc

TRANSMISSION TYPE :

____**AUTO**

__X__**MANUAL**

OPTIONAL EQUIPMENT:

None

DUMMY DATA:

TYPE: HYBRID II 50th %

MASS: 75 kg

SEAT POSITION: LEFT FRONT

GEOMETRY (cm)

A 1520	**D** 1350	**G**	**K** 530	**N** 1345	**Q** 305
B 780	**E** 700	**H**	**L** 75	**O** 1340	
C 2260	**F** 3740	**J** 670	**M** 400	**P** 540	

MASS - (kg)	**CURB**	**TEST INERTIAL**	**GROSS STATIC**
M1	428.0	466.0	503.5
M2	283.0	335.5	373.0
MT	711.0	801.5	876.5

Table 7-3 Test 583 – Deep Cobble - Vehicle Dimensions

DATE: April 24, 2001 **TEST NO:** 583 **VIN NO:** 1GTFC24K01E546233 **MAKE:** GMC

MODEL: 2500 **YEAR:** 1990 **ODOMETER:** 132555 **TIRE SIZE:** LT245-75R16

TIRE INFLATION PRESSURE: **LF** 55 psig **RF** 55 psig **LR** 55 psig **RR** 55 psig

MASS DISTRIBUTION (kg) **LF** 531 **RF** 565 **LR** 454 **RR** 442

DESCRIBE ANY DAMAGE TO VEHICLE PRIOR TO TEST: None

Engine Type: V8

ENGINE CID: 350

TRANSMISSION TYPE :

X **AUTO**

____ **MANUAL**

OPTIONAL EQUIPMENT:

Tow Package

Air Conditioning

DUMMY DATA:

TYPE: NA

MASS: NA

SEAT POSITION: NA

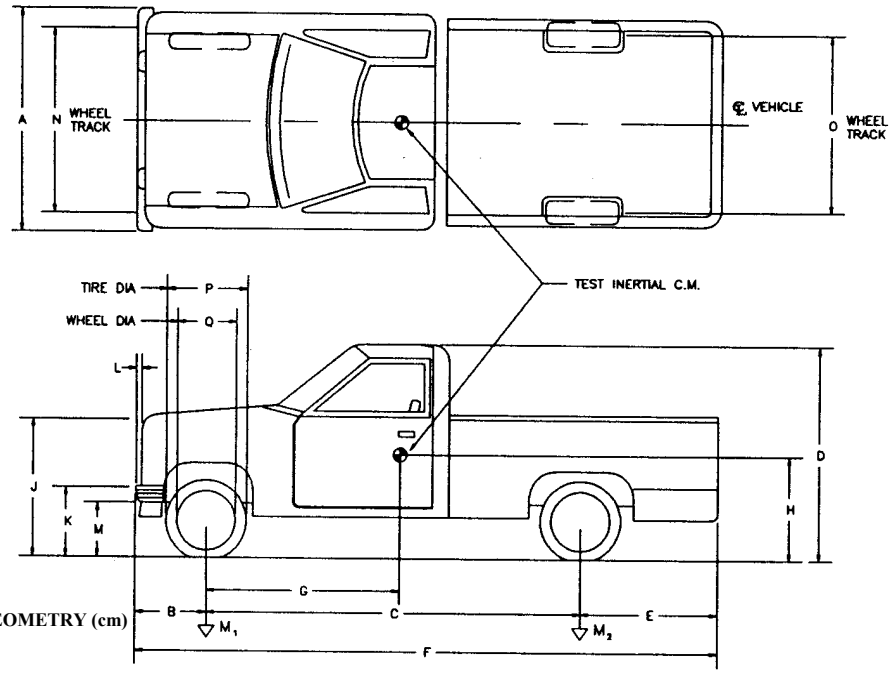

GEOMETRY (cm)

A 1930 **D** 1800 **G** 158

B 920 **E** 1330 **H**

C 3345 **F** 5570 **J** 1050 **M** 430 **P** 740

MASS - (kg)	CURB	TEST INERTIAL	GROSS STATIC
M1	1105	1096	1096
M2	884	896	896
MT	1989	1992	1992

Table 7-4 Test 584 – Mission Arch - Vehicle Dimensions

DATE: May 8, 2001 **TEST NO:** 584 **VIN NO:** 2C1MR2464N6744536 **MAKE:** Geo

MODEL: Metro **YEAR:** 1992 **ODOMETER:** 94570 **TIRE SIZE:** 155R12

TIRE INFLATION PRESSURE: **LF** 35 **RF** 35 **LR** 35 **RR** 35

MASS DISTRIBUTION (kg) **LF** 250 **RF** 250 **LR** 175 **RR** 167

DESCRIBE ANY DAMAGE TO VEHICLE PRIOR TO TEST: Dent in right rear fender – non-impact side and is minor

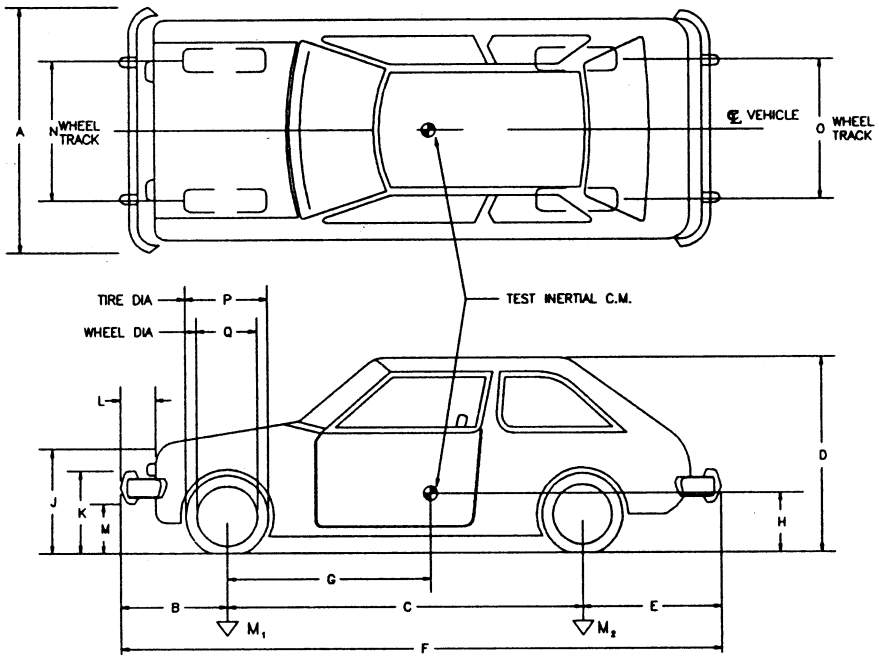

ENGINE TYPE: 3 cylinder

ENGINE CID: 1000 cc

TRANSMISSION TYPE :

X **AUTO**

____ **MANUAL**

OPTIONAL EQUIPMENT:

None

DUMMY DATA:

TYPE: HYBRID III 50th %

MASS: 75 kg

SEAT POSITION: LEFT FRONT

GEOMETRY (cm)

A 1500	**D** 1137	**G**	**K** 520	**N** 1360	**Q** 335
B 720	**E** 690	**H**	**L** 95	**O** 1340	
C 2270	**F** 3680	**J** 650	**M** 410	**P** 550	

MASS - (kg)	**CURB**	**TEST INERTIAL**	**GROSS STATIC**
M1	467	500	537.5
M2	284	342	379.5
MT	751	842	917.0

Table 7-5 Test 585 – Cobble Reveal - Vehicle Dimensions

DATE: June 27, 2001 **TEST NO:** 585 **VIN NO:** 1GCFC241HXLZ258166 **MAKE:** CHEVROLET

MODEL: 2500 **YEAR:** 1990 **ODOMETER:** 147033 **TIRE SIZE:** LT225/75R16

TIRE INFLATION PRESSURE: **LF** 55 psig **RF** 55 psig **LR** 55 psig **RR** 55 psig

MASS DISTRIBUTION (kg) **LF** 535 **RF** 559 **LR** 435 **RR** 429

DESCRIBE ANY DAMAGE TO VEHICLE PRIOR TO TEST: Small dent just left of center on the front of the hood

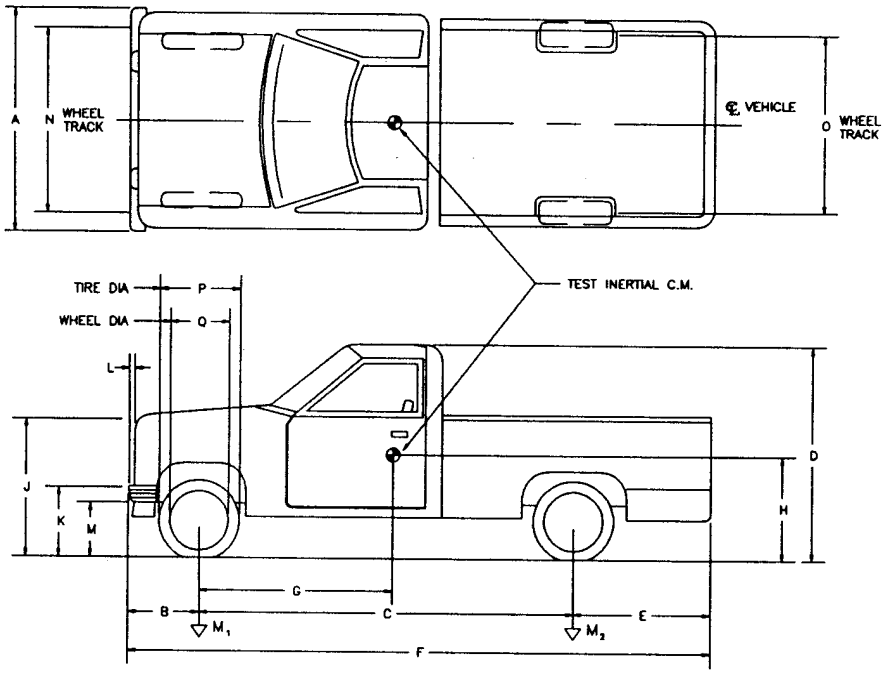

Engine Type: V8

ENGINE CID: 305

TRANSMISSION TYPE :

X **AUTO**

____ **MANUAL**

OPTIONAL EQUIPMENT:

Air Conditioning

DUMMY DATA:

TYPE: NA

MASS: NA

SEAT POSITION: NA

GEOMETRY (cm)

A 1900	**D** 1790	**G** 1474	**K** 600	**N** 1580	**Q** 440
B 870	**E** 1320	**H**	**L** 85	**O** 1615	
C 3340	**F** 5530	**J** 970	**M** 430	**P** 740	

MASS - (kg)	**CURB**	**TEST INERTIAL**	**GROSS STATIC**
M1	1078.7	1094	1094
M2	806.8	864	864
MT	1885.5	1958	1958

Table 7-6 Test 587 – Drystack - Vehicle Dimensions

DATE: July 25, 2001 **TEST NO:** 587 **VIN NO:** 1GTFC24R6WE514050 **MAKE:** GMC

MODEL: 2500 **YEAR:** 1998 **ODOMETER:** 30000 **TIRE SIZE:** LT225/75R16M/S

TIRE INFLATION PRESSURE: **LF** 55 psig **RF** 55 psig **LR** 55 psig **RR** 55 psig

MASS DISTRIBUTION (kg) **LF** 572.9 **RF** 583.5 **LR** 439.8 **RR** 430.7

DESCRIBE ANY DAMAGE TO VEHICLE PRIOR TO TEST: None

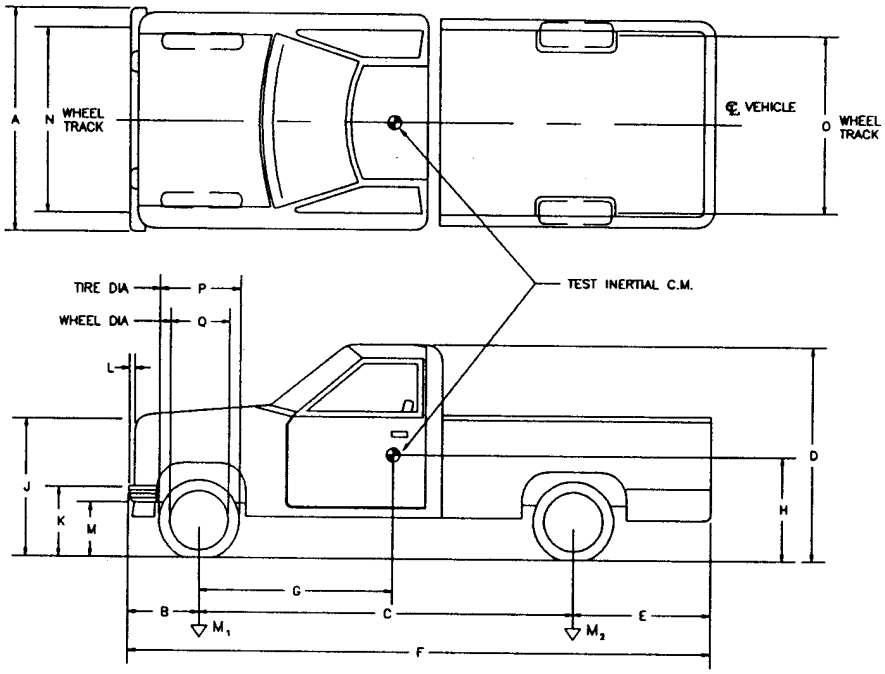

ENGINE TYPE: V8

ENGINE CID: 350

TRANSMISSION TYPE :

X **AUTO**

____ **MANUAL**

OPTIONAL EQUIPMENT:

Air Conditioning

DUMMY DATA:

TYPE: NA

MASS: NA

SEAT POSITION: NA

GEOMETRY (cm)

A 1900	**D** 1780	**G** 1432	**K** 610	**N** 1585	**Q** 430
B 870	**E** 1340	**H**	**L** 90	**O** 1615	
C 3335	**F** 5545	**J** 1040	**M** 420	**P** 750	

MASS - (kg)	**CURB**	**TEST INERTIAL**	**GROSS STATIC**
M1	1163	1156.4	1156.4
M2	823	870.5	870.5
MT	1986	2026.9	2026.9

Table 7-7 Test 588 – Fractured Granite - Vehicle Dimensions

DATE: November 27, 2001 **TEST NO:** 588 **VIN NO:** 1GCFC24H2RZ264908 **MAKE:** CHEVROLET

MODEL: 2500 **YEAR:** 1994 **ODOMETER:** 48,999 **TIRE SIZE:** LT225-75R16

TIRE INFLATION PRESSURE: **LF** 60 psig **RF** 60 psig **LR** 60 psig **RR** 60 psig

MASS DISTRIBUTION (kg) **LF** 534 **RF** 555 **LR** 439 **RR** 437

DESCRIBE ANY DAMAGE TO VEHICLE PRIOR TO TEST: None

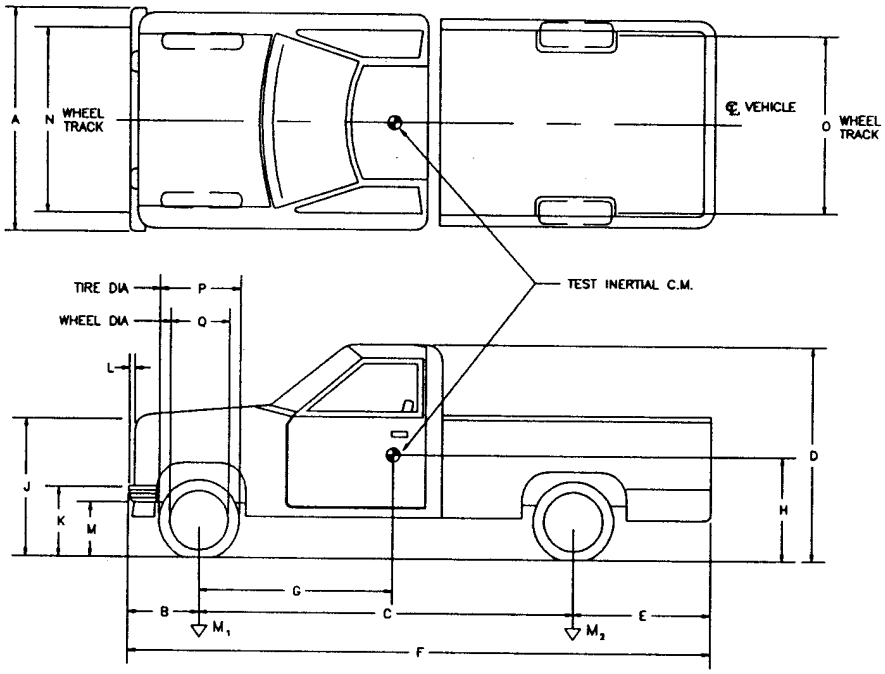

ENGINE TYPE: V8

ENGINE CID: 305

TRANSMISSION TYPE :

X **AUTO**

____ **MANUAL**

OPTIONAL EQUIPMENT:

Air Conditioning

DUMMY DATA:

TYPE: NA

MASS: NA

SEAT POSITION: NA

GEOMETRY (cm)

A 1860	**D** 1770	**G**	**K** 610	**N** 1560	**Q** 440
B 870	**E** 1270	**H**	**L** 90	**O** 1615	
C 3350	**F** 5490	**J** 1020	**M** 410	**P** 750	

MASS - (kg)	**CURB**	**TEST INERTIAL**	**GROSS STATIC**
M1	1081	1089	1089
M2	750	876	876
MT	1831	1965	1965

Table 7-8 Test 589 – Shallow Cobble - Vehicle Dimensions

DATE: 3/20/2002 **TEST NO:** 589 **VIN NO:** 1GCFC24H2RE278752 **MAKE:** CHEVROLET

MODEL: 2500 **YEAR:** 1994 **ODOMETER:** 50845 **TIRE SIZE:** LT 225/75 R16

TIRE INFLATION PRESSURE: **LF** 55 psig **RF** 55 psig **LR** 55 psig **RR** 55 psig

MASS DISTRIBUTION (kg) **LF** 523 **RF** 570 **LR** 439 **RR** 424

DESCRIBE ANY DAMAGE TO VEHICLE PRIOR TO TEST: None

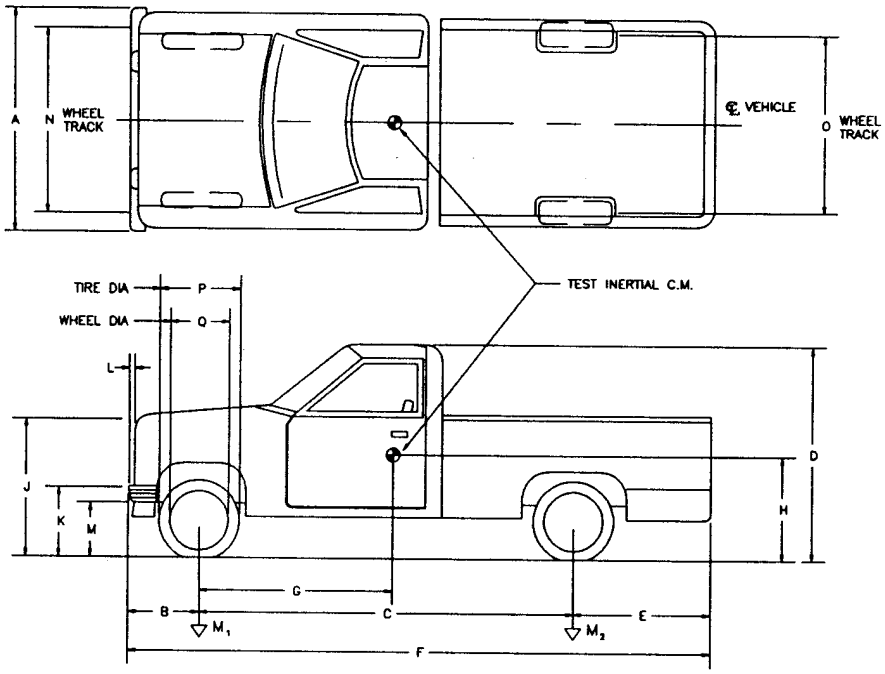

ENGINE TYPE: V8

ENGINE CID: 305

TRANSMISSION TYPE :

X **AUTO**

____ **MANUAL**

OPTIONAL EQUIPMENT:

Air Conditioning

DUMMY DATA:

TYPE: NA

MASS: NA

SEAT POSITION: NA

GEOMETRY (cm)

A 1860	**D** 1780	**G** 1474	**K** 590	**N** 1590	**Q** 440
B 860	**E** 1310	**H**	**L** 80	**O** 1620	
C 3340	**F** 4510	**J** 1010	**M** 440	**P** 740	

MASS - (kg)	**CURB**	**TEST INERTIAL**	**GROSS STATIC**
M1	1083	1093	1093
M2	762	863	863
MT	1845	1956	1956

7.2. Test Vehicle Guidance System

A rail guidance system directed the vehicle into the barrier. The guidance rail, anchored at 3.8 m intervals along its length, was used to guide a mechanical arm that was attached to the front right wheel of each of the vehicles. A 10-mm nylon rope was used to trigger the release mechanism on the guidance arm, thereby releasing the vehicle from the guidance system before impact (Figure 7-1).

Figure 7-1 – Typical guidearm release

7.3. Photo - Instrumentation

Several high-speed movie cameras recorded the impact during the crash tests. The types of cameras and their locations are shown in Table 7-9 and Figure 7-2.

All of these cameras were mounted on tripods except the three that were mounted on a 10.7-m high tower directly over the impact point on the test barrier.

A video camera and a 16-mm film camera were turned on by hand and used to obtain pan shots during the test. Switches on a console trailer near the impact area remotely triggered all other cameras. The test vehicle and test barrier were photographed before and after impact with a normal-speed movie camera, a beta video camera and a color still camera. A film report of this project has been assembled using edited portions of the crash testing coverage.

Table 7-9 - Typical Camera Type and Locations

Typical Coordinates, m						
Camera Label	Film Size (mm)	Camera Type	Rate: (fr./sec.)	Test 571		
				X*	Y*	Z*
L1	16	LOCAM 1	400	10.0	-1.4	-2.0
L2	16	LOCAM 2	400	0.0	0.0	-9.1
L3	16	LOCAM 3	400	-35.8	0.2	-1.2
L4	16	LOCAM 4	400	0.45	0.0	-9.1
L5	16	LOCAM 5	400	95.6	0.33	-2.1
L6	16	LOCAM 6	400	-0.45	0.0	-9.1
L8	16	LOCAM 8	400	3.1	21.5	-1.2
V	1.27	SONY BETACAM	30	1.8	22.0	-1.2
H	35	HULCHER	40	95.7	0.71	-2.1

Note: Camera location measurements were approximated and are typical for all crash tests involved in this report.
*X, Y and Z distances are relative to the impact point.

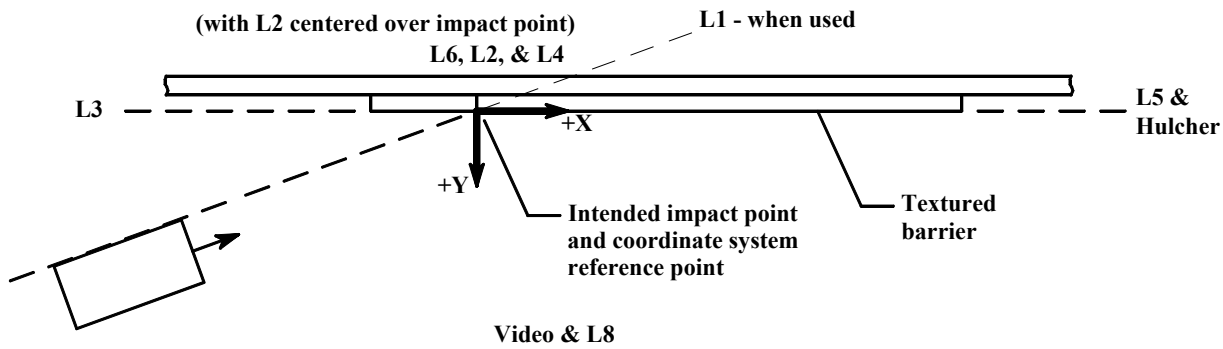

Figure 7-2 - Camera Locations

The following are the pretest procedures that were required to enable film data reduction to be performed using a Visual Instrumentation Corporation Model 1214A film motion analyzer:

1) Butterfly targets were attached to the top and sides of each test vehicle. The targets were located on the vehicle at intervals of 0.5 and 1.0. The targets established scale factors and horizontal and vertical alignment. The test barrier was targeted with stenciled numbers every 1 meter.

2) Flashbulbs, mounted on the test vehicle, were electronically triggered to establish 1) initial vehicle-to-barrier contact, and 2) the time of the application of the vehicle brakes. The impact flashbulbs begin to glow immediately upon activation, but have a delay of several milliseconds before lighting up to full intensity.

3) Five tape switches, placed at 4 m intervals, were attached to the ground near the barrier and were perpendicular to the path of the test vehicle. Flashbulbs were activated sequentially when the tires of the test vehicle rolled over the tape switches. The flashbulb stand was placed in view of the cameras. The flashbulbs were used to correlate the cameras with the impact events and to calculate the impact speed independent of the electronic speed trap. The tape switch layout is shown in Figure 7-3.

4) High-speed cameras had timing light generators which exposed red timing pips on the film at a rate of 100 per second. The pips were used to determine camera frame rates.

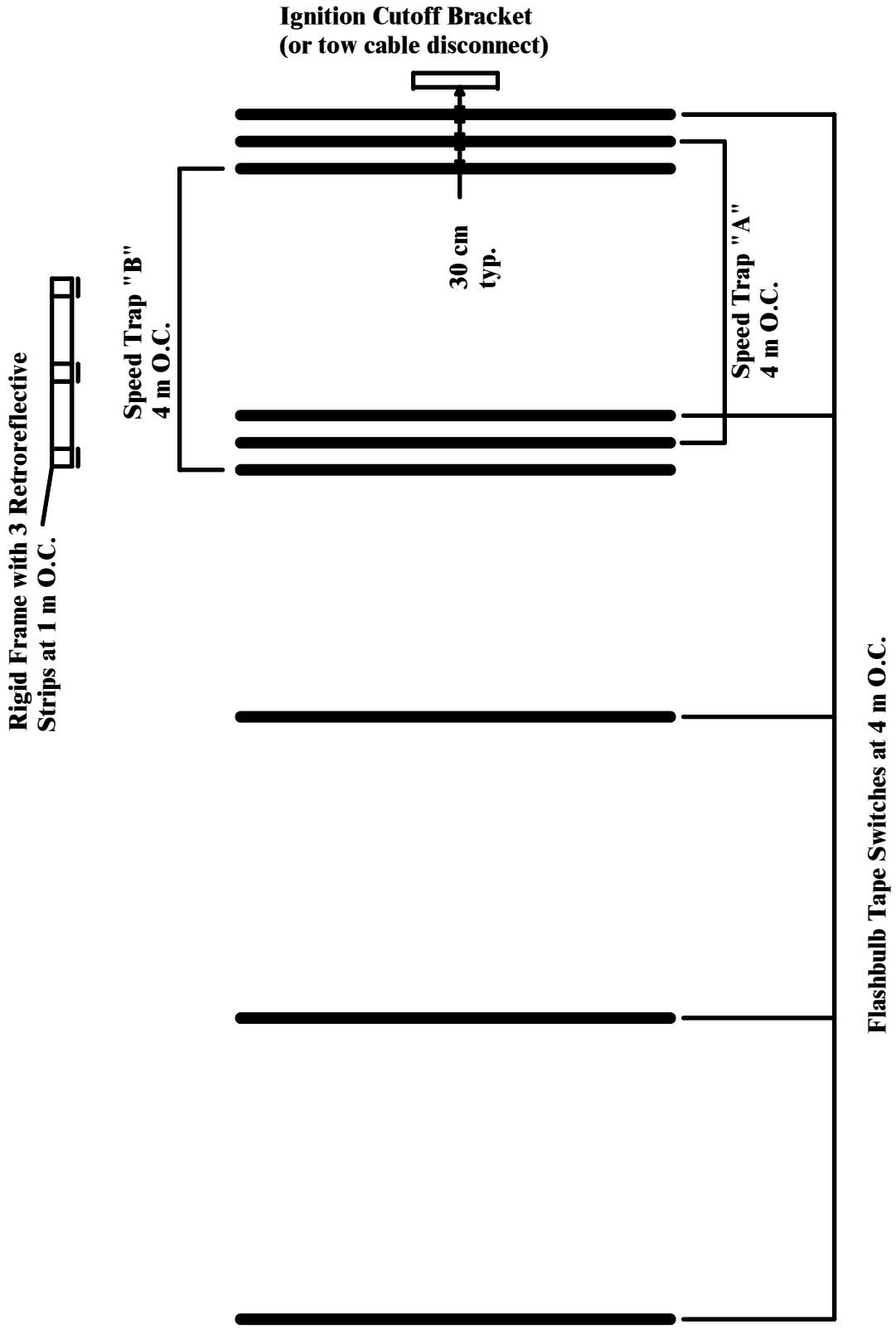

Figure 7-3 - Event Switch Layout

7.4. Electronic Instrumentation and Data

Transducer data were recorded on two separate GMH Engineering, Data Brick, Model II, digital transient data recorders (TDRs) which were mounted in the vehicle for all tests. The transducers mounted on the vehicle include two sets of accelerometers and one set of rate gyros at the center of gravity. The 820C vehicles also had one set of accelerometers 600 mm behind the center of gravity. The TDR data were reduced using a desktop personal computer running DADiSP 4.1.

Accelerometer specifications are shown in Table 7-10. The vehicle accelerometer sign convention used throughout this report is the same as that described in NCHRP Report 350 and is shown in Figure 7-4.

A rigid stand with three retroreflective 90° polarizing tape strips was placed on the ground near the test barrier and alongside the path of the test vehicle (Figure 7-3). The strips were spaced at carefully measured intervals of 1 m. The test vehicle had an onboard optical sensor which produced sequential impulses or "event blips" that were recorded concurrently with the accelerometer signals on the TDR, serving as "event markers". The impact velocity of the vehicle could be determined from these sensor impulses and timing cycles and the known distance between the tape strips. A pressure sensitive tape switch on the front bumper of the vehicle closed at the instant of impact and triggered two events: 1) an “event marker” was added to the recorded data, and 2) a flashbulb mounted on the top of the vehicle was activated. Two other pressure sensitive tape switches, connected to a speed trap, were placed 4 m apart just upstream of the test barrier specifically to establish the impact speed of the test vehicle. The layout for all of the pressure sensitive tape switches is shown in Figure 7-3.

The data curves are shown in Figure 7-5 through Figure 7-44 and include the accelerometer and rate gyro records from the test vehicles. They also show the velocity and displacement curves for the longitudinal and lateral components. These plots were needed to calculate the occupant impact velocity defined in NCHRP Report 350. All data were analyzed using software written by DADiSP and modified by Caltrans.