ATTACHMENT K

ADVANCE PLANNING STUDIES

PREPARED FOR THE STATE OF CALIFORNIA - DEPARTMENT OF TRANSPORTATION

DIST.	COUNTY	ROUTE	POST MILES TOTAL PROJECT
06	KER	58	33.1/55.4

TRIP
900 Truxtun Ave, Suite 200
Bakersfield, CA 93301

PARSONS
2201 DUPONT DRIVE, SUITE 200
IRVINE, CA 92612

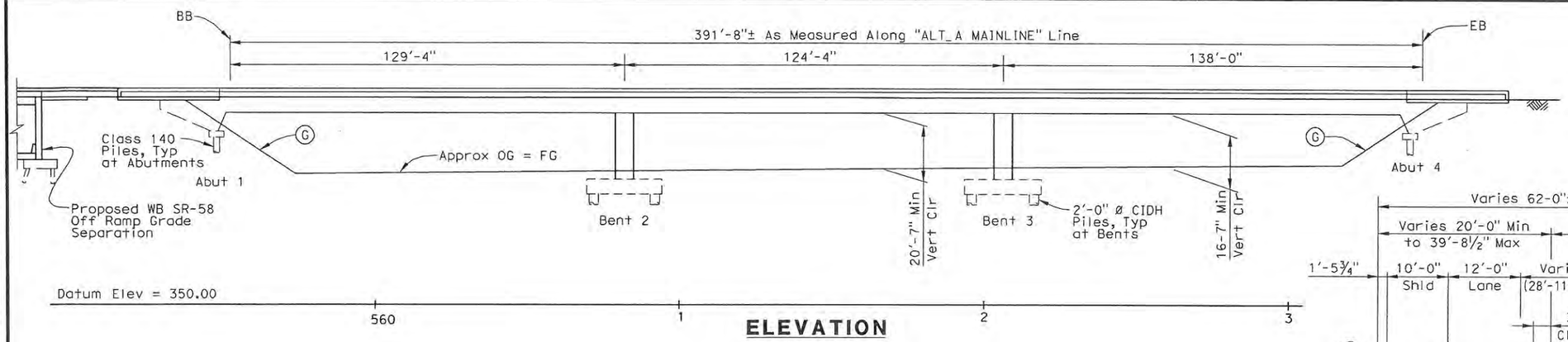

ELEVATION
1" = 20'

LEGEND:

- Existing Bridge
- Indicates Direction of Traffic
- Bridge Removal
- Closure Pour
- Indicates Point of Minimum Vertical Clearance
- Indicates Point of Minimum Vertical Clearance Over SR99
- Indicates Existing Point of Minimum Vertical Clearance 17'-2"±

NOTES:

- (A) Paint "WB SR-58 Over SR-99"
- (B) Paint "Bridge No. 50-0426F"
- (C) Concrete Barrier Type 736
- (D) Temporary Railing Type K
- (E) Structure Approach Type N(30S)
- (F) Structure Approach Type R(30S)
- (G) Slope Paving, To Match Existing

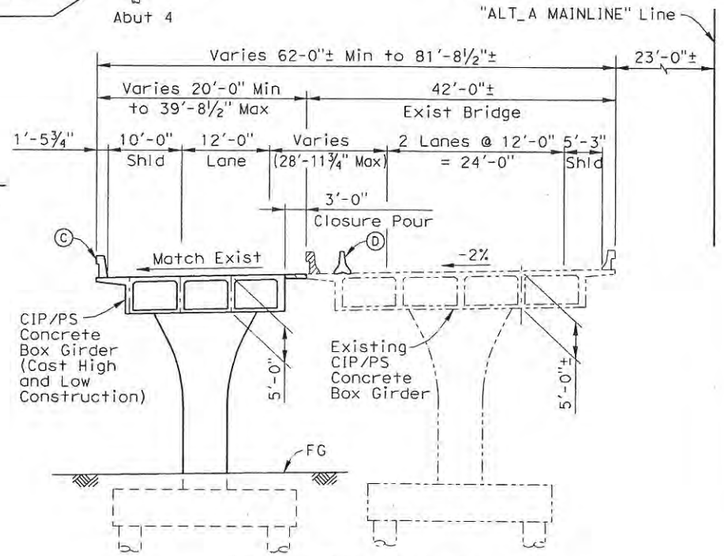

Note: All Piles not Shown.

TYPICAL SECTION
1" = 10'

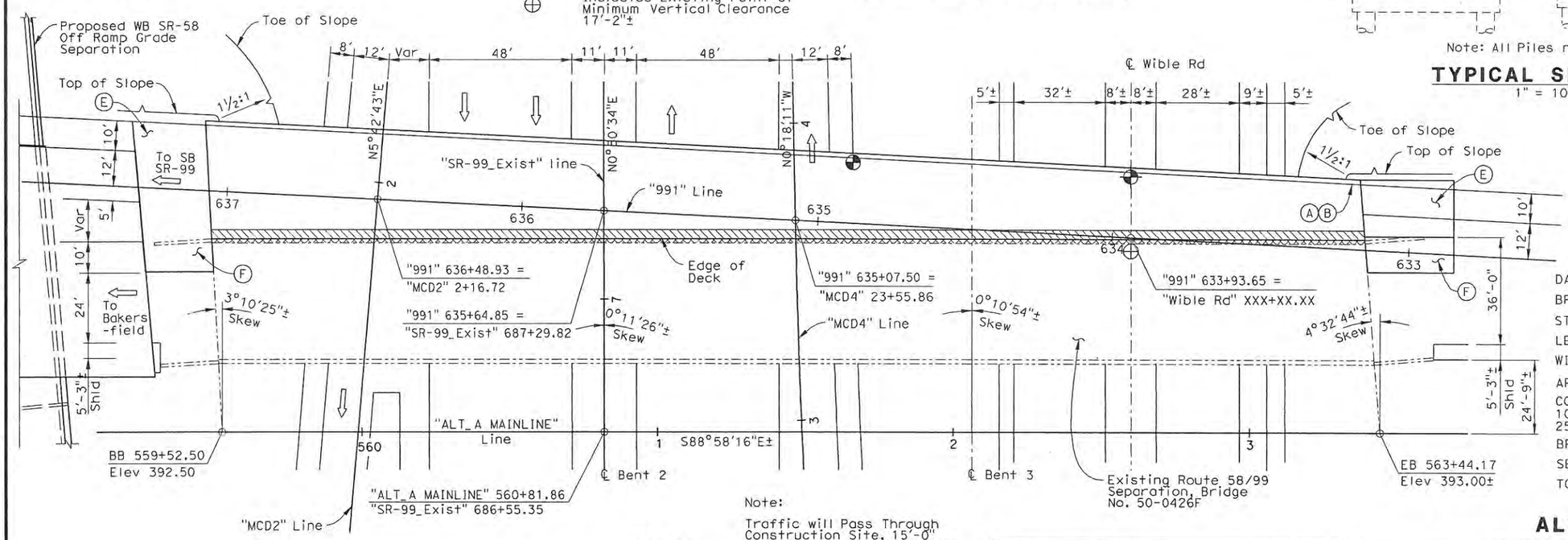

Note:
Traffic will Pass Through Construction Site, 15'-0" Minimum Vertical Clearance Required Under Falsework.

PLAN
1" = 20'

DATE OF ESTIMATE	= 04/06/12
BRIDGE REMOVAL	= 1,176 SF
STRUCTURE DEPTH	= 5'-0"
LENGTH	= 391'-8"
WIDTH	= 20'-0" Min & Var
AREA OF WIDENINGS	= 11,701 SF
COST/SF INCLUDING 10% MOBILIZATION & 25% CONTINGENCY	= $ 202
BRIDGE REMOVAL	= $ 23,505
SEISMIC RETROFIT	= $ 50,000
TOTAL COST	= $ 2,360,000

ALTERNATIVES A & B

DESIGNED BY U. Sandira	DATE 04/06/12	Mohsen Mohseni PROJECT ENGINEER	**PLANNING STUDY**
DRAWN BY J. Gilmore	DATE 04/06/12		**WB SR-58 OVER SR-99 (WIDEN)**
CHECKED BY M. Mohseni	DATE 04/06/12		BRIDGE NO. 50-0426F / CU
APPROVED M. Mohseni	DATE 04/06/12		SCALE: As Noted / EA 06-48460

R Massey
DESIGN OVERSIGHT
6-22-12
SIGN OFF DATE

ADVANCE PLANNING STUDY SHEET (ENGLISH) (REV. 06-01-09)

FILE => $REQUEST

USERNAME => $USER DATE PLOTTED => $DATE TIME PLOTTED => $TIME

PREPARED FOR THE STATE OF CALIFORNIA - DEPARTMENT OF TRANSPORTATION

DIST.	COUNTY	ROUTE	POST MILES TOTAL PROJECT
06	KER	58	33.1/55.4

TRIP
900 Truxtun Ave. Suite 200
Bakersfield, CA 93301

PARSONS
2201 DUPONT DRIVE, SUITE 200
IRVINE, CA 92612

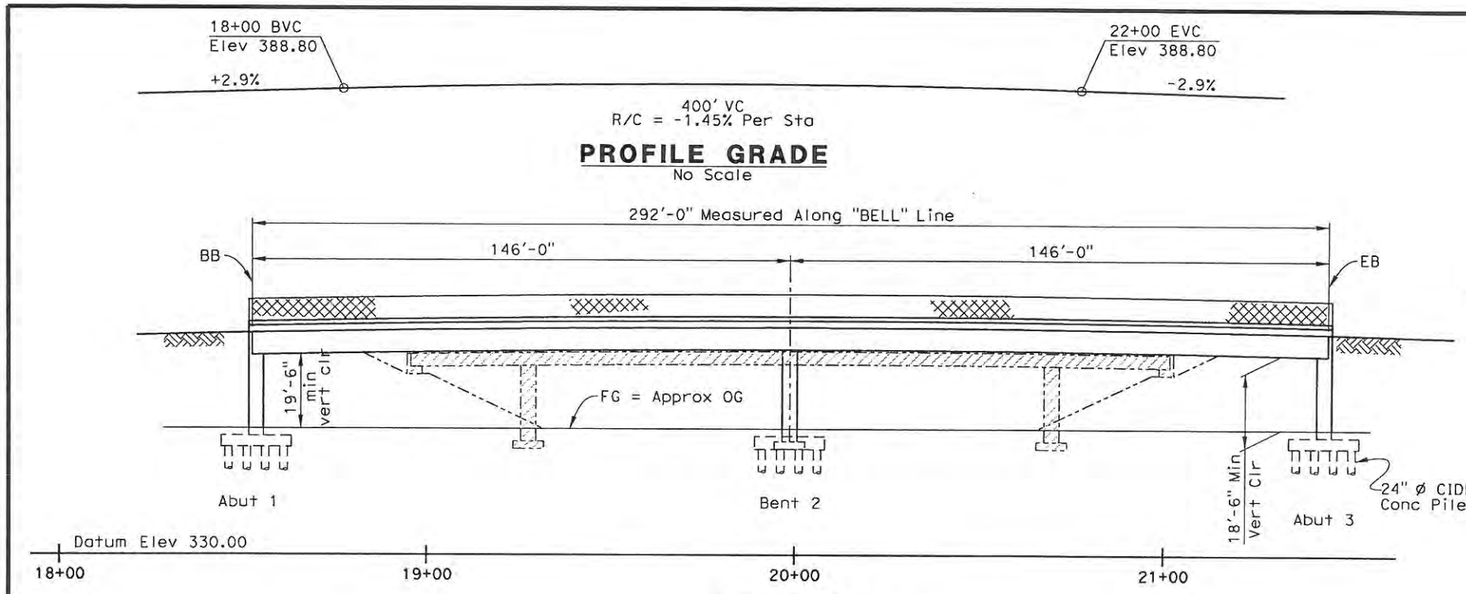

PROFILE GRADE
No Scale

ELEVATION
1" = 20'

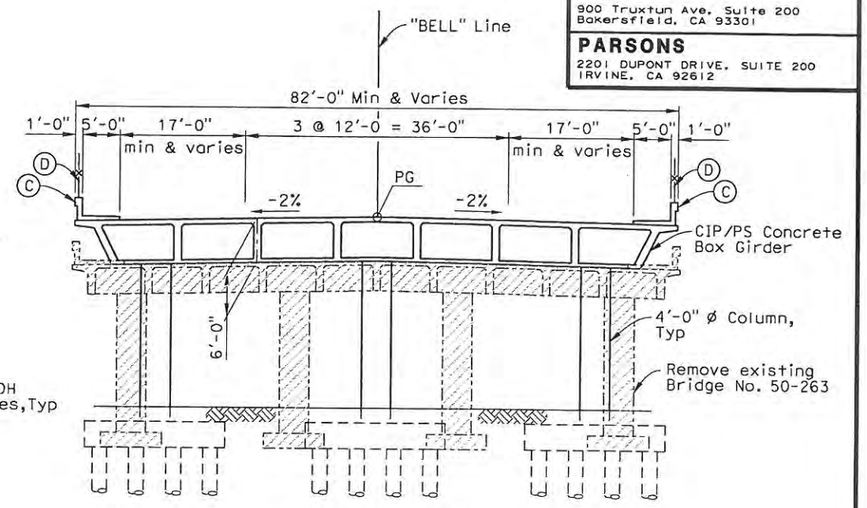

TYPICAL SECTION
1" = 10'

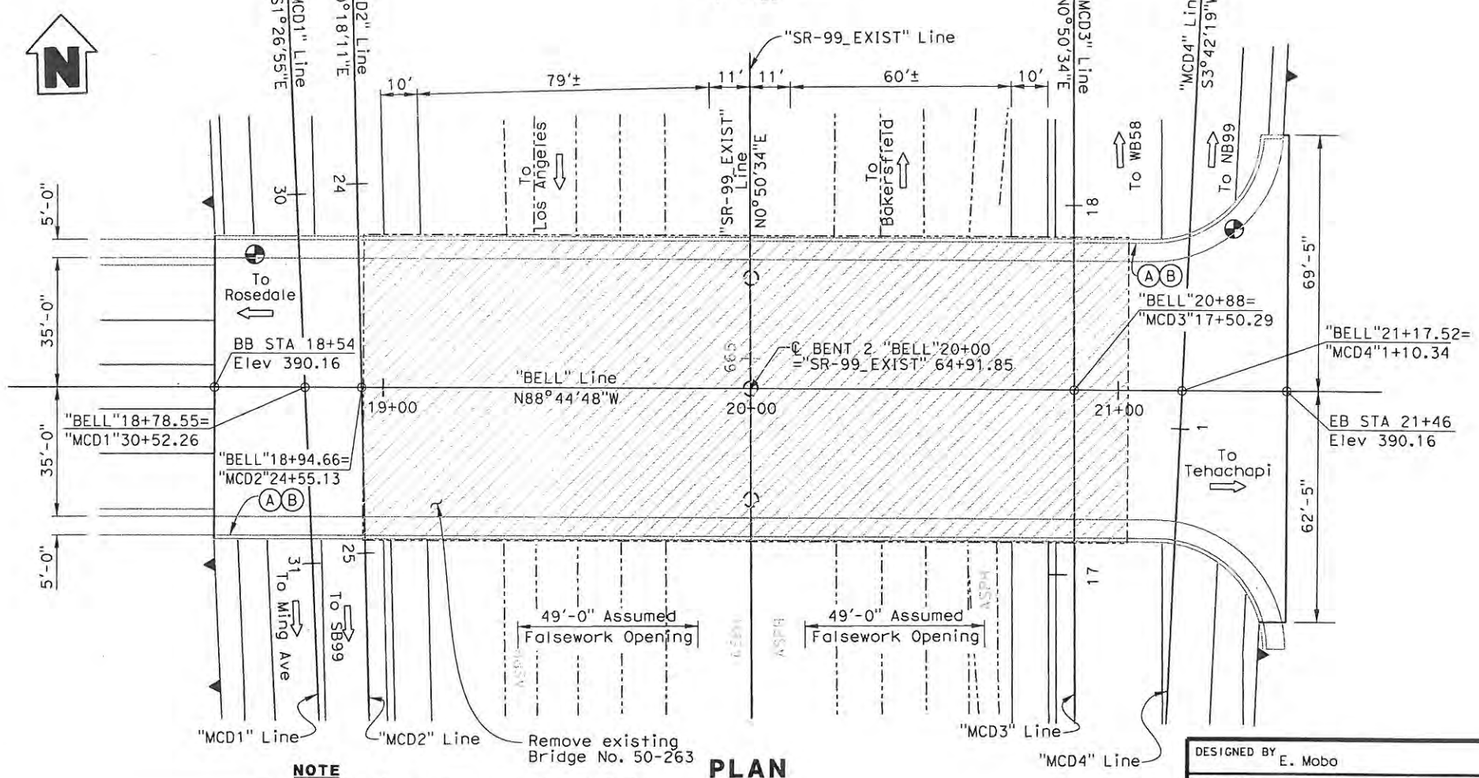

PLAN
1" = 20'

NOTE

1. Traffic will pass through "SR 99" Line, 15'-0" mininum vertical clearance required under falsework.
2. Traffic on Belle Terrace will be detoured during construction.

DATE OF ESTIMATE	= 03/26/12
BRIDGE REMOVAL	= 17,195 SF
STRUCTURE DEPTH	= 6'-0"
LENGTH	= 292'-0"
WIDTH	= 82'-0"Min & Var
AREA	= 24,844 SF
COST/SF INCLUDING 10% MOBILIZATION & 25% CONTINGENCY	= $239/SF
BRIDGE REMOVAL	= $430,000
TOTAL COST	= $5,940,000

NOTES:

(A) Paint "BELLE TERRACE AVE OC"
(B) Paint "Bridge No. 50-XXXX"
(C) Concrete Barrier Type 26
(D) Chain Link Railing (Type 7)

LEGEND:

- Indicates Direction of Traffic
- Indicates Point of Minimum Vertical Clearance
- Indicates Soil Nail Wall
- Indicates Existing Structure
- Indicates Bridge removal

ALTERNATIVES A & B

B Mahseni
DESIGN OVERSIGHT
6-22-12
SIGN OFF DATE

DESIGNED BY	E. Mobo	DATE	3/26/12
DRAWN BY	S. LEE	DATE	3/26/12
CHECKED BY	R. Mathur	DATE	3/26/12
APPROVED	M.Mohseni	DATE	3/26/12

Mohsen Mohseni
PROJECT ENGINEER

PLANNING STUDY

BELLE TERRACE AVE OC (REPLACE)

BRIDGE NO. 50-XXXX	CU
SCALE: As Noted	EA 06-48460

ADVANCE PLANNING STUDY SHEET (ENGLISH) (REV. 06-01-09)

FILE => C:\PW_Working\PTGpwlseb\p0038090\dms90794\Alt A&B Belle Terrace Ave OC (Replace)-gp01.dgn

USERNAME => p0038090 DATE PLOTTED => 3/27/2012 TIME PLOTTED => 21:48:16 PM

PREPARED FOR THE STATE OF CALIFORNIA - DEPARTMENT OF TRANSPORTATION

DIST.	COUNTY	ROUTE	POST MILES TOTAL PROJECT
06	KER	58	T31.7/R55.4

TRIP
900 Truxtun Ave, Suite 200
Bakersfield, CA 93301

PARSONS
2201 DUPONT DRIVE, SUITE 200
IRVINE, CA 92612

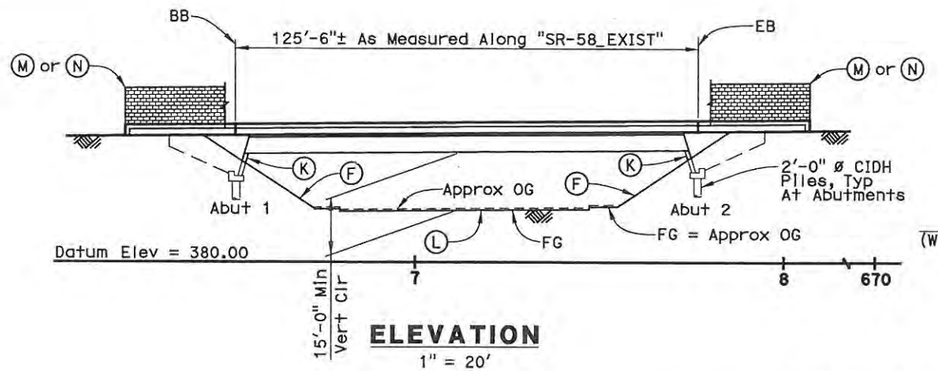

ELEVATION
1" = 20'

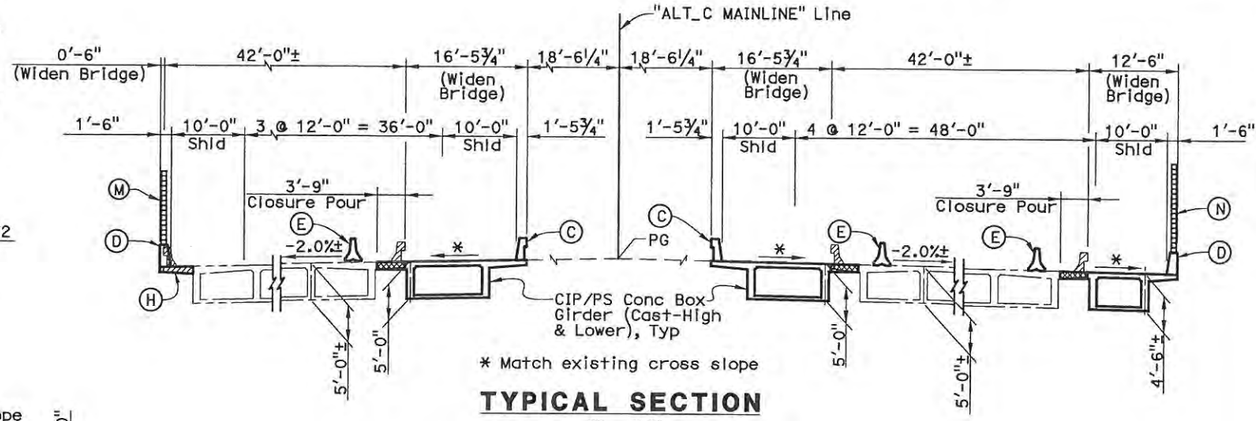

* Match existing cross slope

TYPICAL SECTION
1" = 10'

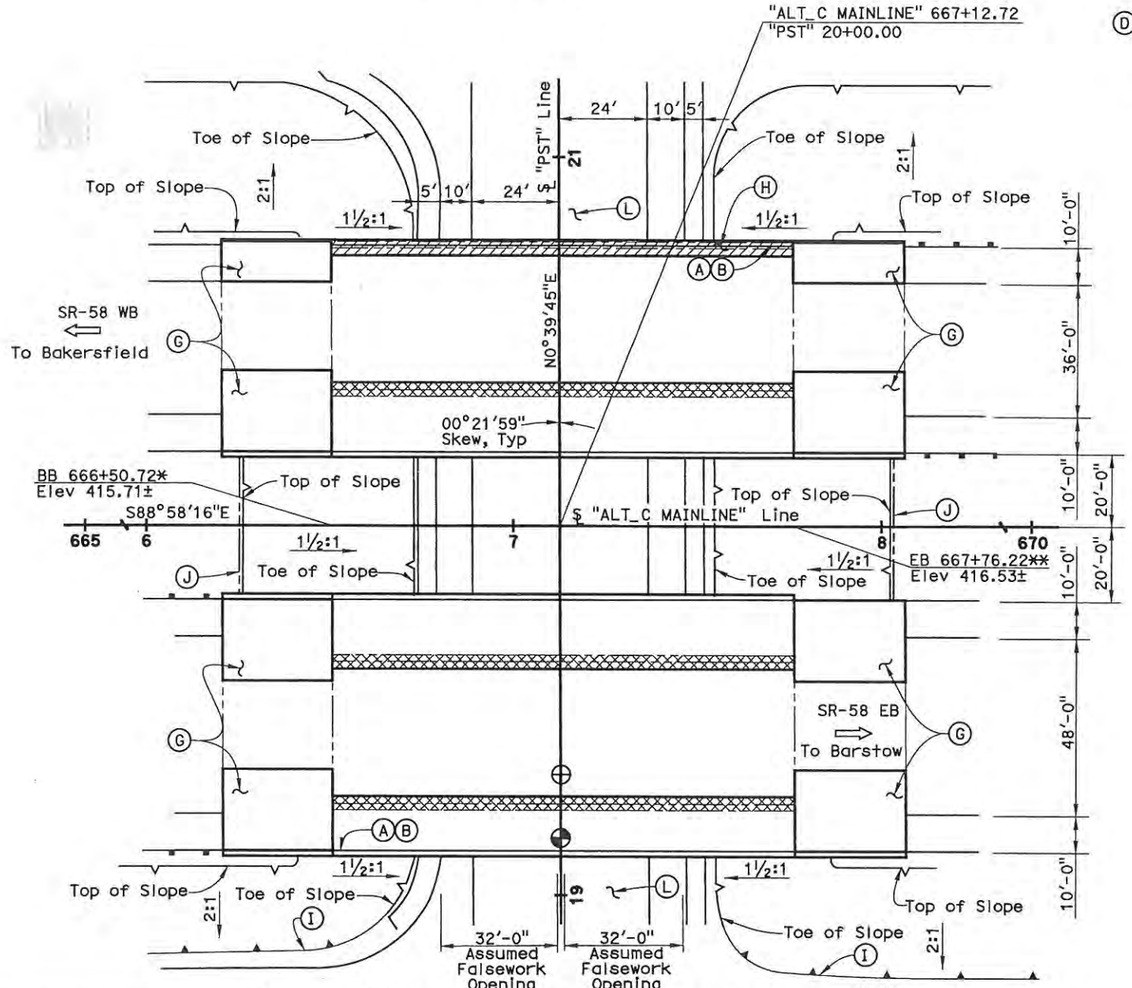

* Exist BB 109+77.53 Per "SR-58_EXIST" Line
** Exist EB 111+03.03 Per "SR-58_EXIST" Line

PLAN
1" = 20'

Note:
Traffic will Pass Through Construction Site, 15'-0" Minimum Vertical Clearance Required Under Falsework.

DATE OF ESTIMATE	= 4/06/12
BRIDGE REMOVAL	= 1,883 SF
STRUCTURE DEPTH	= 5'-0"
LENGTH	= 125'-6"
WIDTH	= Var
AREA OF WIDENINGS	= 5,763 SF
COST/SF INCLUDING 10% MOBILIZATION & 25% CONTINGENCY	= $ 333
BRIDGE REMOVAL	= $ 30,000
SEISMIC RETROFIT	= $ 92,000
TOTAL COST	= $ 1,920,000

NOTES:

(A) Paint "South P Street UC"
(B) Paint "Bridge No. 50-0405R/L"
(C) Concrete Barrier Type 736
(D) Concrete Barrier Type 736SV
(E) Temporary Railing Type K
(F) Slope Paving
(G) Structure Approach Type N(30D)
(H) Remove and Replace Overhang
(I) Retaining Wall, see "Road Plans"
(J) Cable Railing
(K) Exist Abutment Stem Seismic Retrofit
(L) South "P" Street roadway profile to be lowered 6" to make final minimum vertical clearance 15'-0"
(M) Soundwall, Height = 10'-0"
(N) Soundwall, Height = 12'-0"

LEGEND:

- Existing Bridge
- Indicates Existing Lane of Traffic
- Bridge Removal
- Closure Pour
- Indicates Point of Minimum Vertical Clearance
- Indicates Exist Point of Minimum Vertical Clearance (14'-10"±)
- MBGR
- Retaining Wall

ALTERNATIVE A, B, AND C

DESIGNED BY M. Ruvalcaba	DATE 4/6/11	Mohsen Mohseni PROJECT ENGINEER	**PLANNING STUDY**
DRAWN BY P. Johnson	DATE 4/6/12		**SOUTH "P" STREET UC (WIDEN)**
CHECKED BY M. Mohseni	DATE 4/6/12		BRIDGE NO. 50-0405 R/L | CU
APPROVED M. Mohseni	DATE 4/6/12		SCALE: As Noted | EA 06-48460

DESIGN OVERSIGHT
6-22-12
SIGN OFF DATE

ADVANCE PLANNING STUDY SHEET (ENGLISH) (REV. 08-01-09)

FILE => c:\pw_working\ptgpwlseb\p0024020\dms93384\50-405r1-a-gp01.dgn

USERNAME => p0024020 DATE PLOTTED => 4/6/2012 TIME PLOTTED => 9:28:45 AM

PREPARED FOR THE STATE OF CALIFORNIA - DEPARTMENT OF TRANSPORTATION

DIST.	COUNTY	ROUTE	POST MILES TOTAL PROJECT
06	KER	58	T31.7/R55.4

TRIP
900 Truxtun Ave, Suite 200
Bakersfield, CA 93301

PARSONS
2201 DUPONT DRIVE, SUITE 200
IRVINE, CA 92612

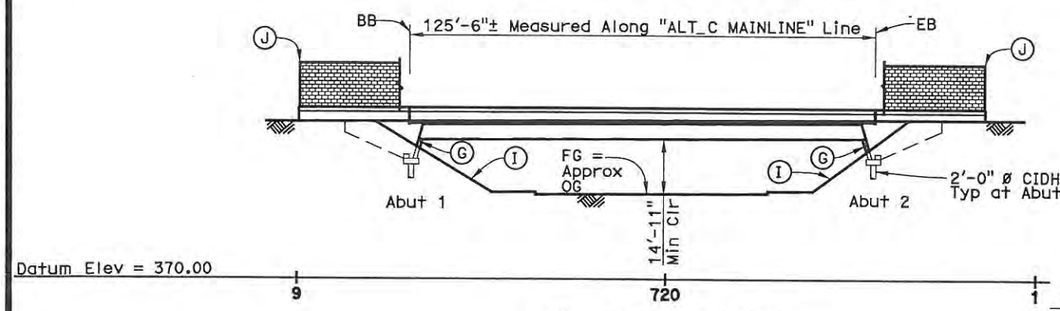

NOTE: All Piles not Shown

ELEVATION
1" = 20'

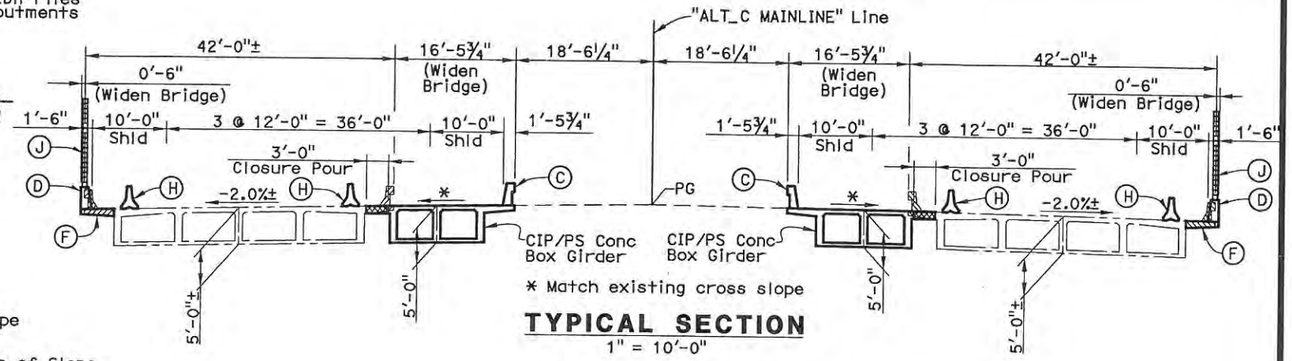

* Match existing cross slope

TYPICAL SECTION
1" = 10'-0"

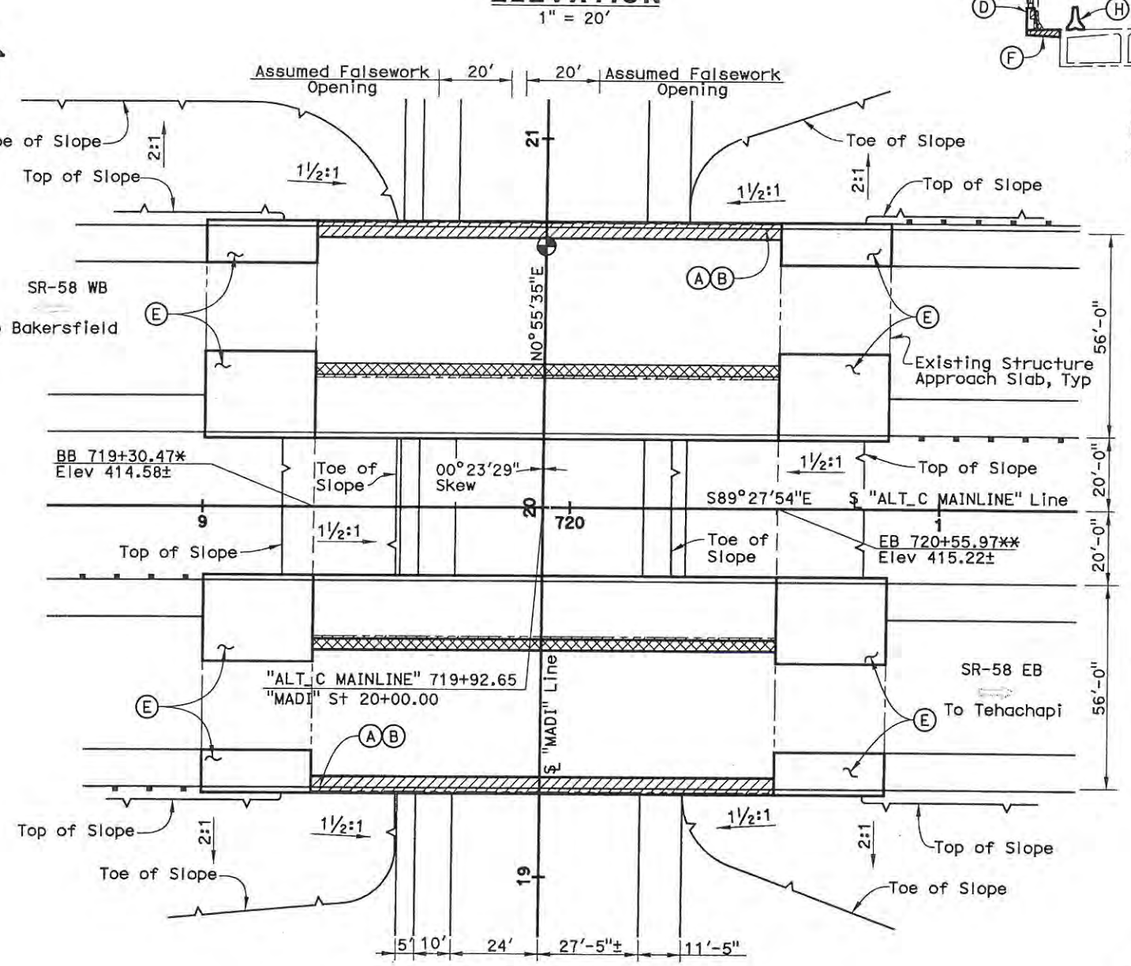

* Exist BB 162+52.83± Per "SR-58_EXIST" Line
** Exist EB 163+78.33± Per "SR-58_EXIST" Line

PLAN
1" = 20'

Note:
Traffic will pass through construction site, 15'-0" minimum vertical clearance required under falsework.

DATE OF ESTIMATE	= 4/6/12
BRIDGE REMOVAL	= 1,852 SF
STRUCTURE DEPTH	= 5'-0"
LENGTH	= 125'-6"
WIDTH	= 33'-11"
AREA	= 4,257 SF
COST/SF INCLUDING 10% MOBILIZATION & 25% CONTINGENCY	= $ 256
BRIDGE REMOVAL	= $ 37,040
SEISMIC RETROFIT	= $ 70,000
TOTAL COST	= $ 1,090,000

NOTES:

(A) Paint "Madison Street Undercrossing"
(B) Paint "Bridge No. 50-0407R/L"
(C) Concrete Barrier Type 736
(D) Concrete Barrier Type 736SV
(E) Structure Approach Type N(30D)
(F) Remove and Replace Overhang
(G) Seismic Retrofit Existing Abutment Diaphragm
(H) Temporary Railing Type K
(I) Slope Paving
(J) Soundwall, Height = 12'-0"

LEGEND:

- Existing Bridge
- Indicates Direction of Traffic
- Bridge Removal
- Closure Pour
- Indicates Point of Mininmum Vertical Clearance (Same as Existing)
- MBGR

ALTERNATIVE A, B AND C

DESIGN OVERSIGHT
6-22-12
SIGN OFF DATE

DESIGNED BY	J. Fix	DATE	4/6/12
DRAWN BY	P. Johnson	DATE	4/6/12
CHECKED BY	M. Ruvalcaba	DATE	4/6/12
APPROVED	M. Moheni	DATE	4/6/12

Mohsen Moheni
PROJECT ENGINEER

PLANNING STUDY
MADISON STREET UC (WIDEN)

BRIDGE NO. 50-407 R/L	CU
SCALE: AS NOTED	EA 06-48460

ADVANCE PLANNING STUDY SHEET (ENGLISH) (REV. 06-01-09)

FILE => c:\pw_working\ptgpwleeb\p0024020\dms93397\50-0407-a-gp01.dgn

USERNAME => p0024020 DATE PLOTTED => 4/9/2012 TIME PLOTTED => 1:09:36 PM

PREPARED FOR THE STATE OF CALIFORNIA - DEPARTMENT OF TRANSPORTATION

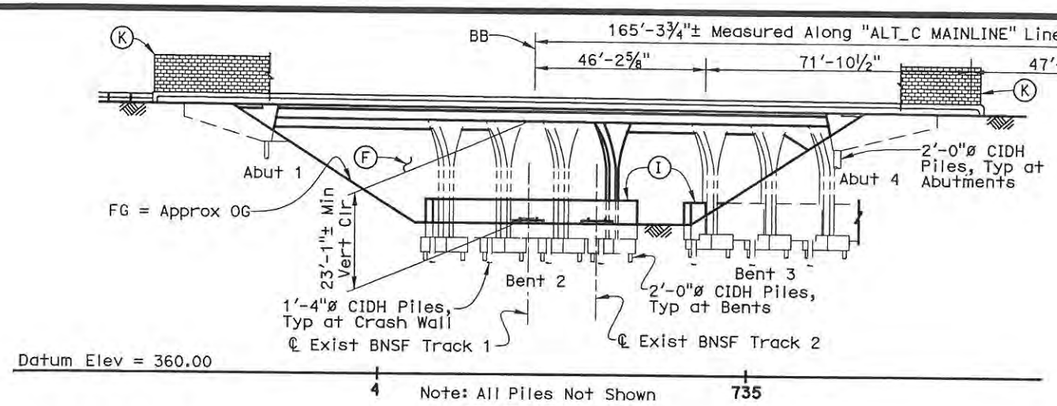

ELEVATION
1" = 20'

DATE OF ESTIMATE	=	4/6/12
BRIDGE REMOVAL	=	2,563 SF
STRUCTURE DEPTH	=	3'-6"
LENGTH	=	165'-3¾"
WIDTH	=	Varies
AREA	=	5,607 SF
COST/SF INCLUDING 10% MOBILIZATION & 25% CONTINGENCY	=	$ 350
BRIDGE REMOVAL	=	$ 30,000
SEISMIC RETROFIT	=	$ 25,000
TOTAL COST	=	$ 1,960,000

DIST.	COUNTY	ROUTE	POST MILES TOTAL PROJECT
06	KER	58	T31.7/R55.6

TRIP
900 Truxtun Ave, Suite 200
Bakersfield, CA 93301

PARSONS
2201 DUPONT DRIVE, SUITE 200
IRVINE, CA 92612

Note:
Rail traffic will pass through the construction site, 21'-4" minimum vertical clearance required under falsework

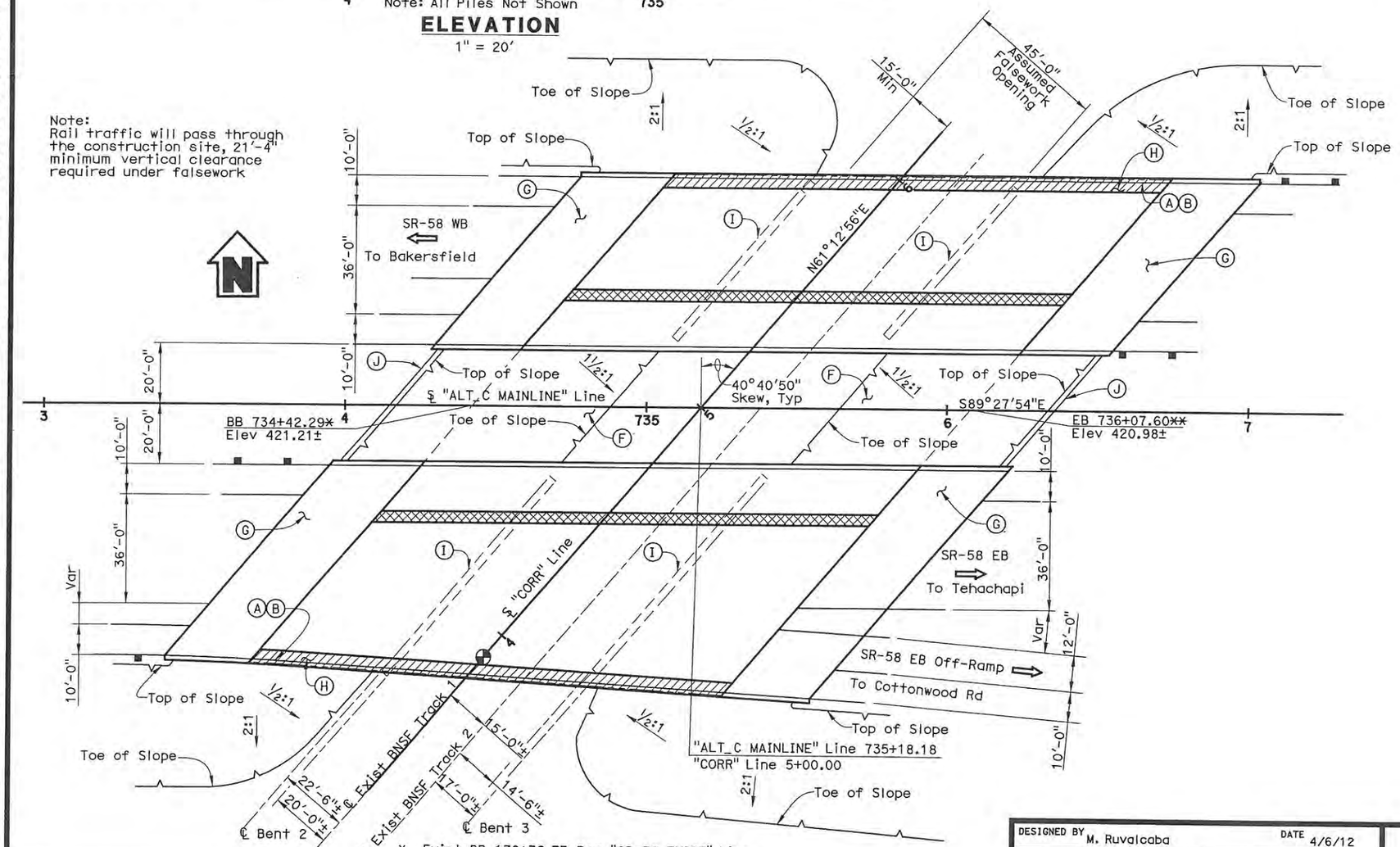

* Exist BB 178+36.73 Per "SR-58_EXIST" Line
** Exist EB 180+02.04 Per "SR-58_EXIST" Line

PLAN
1" = 20'

NOTES:

Ⓐ Paint "Bakersfield Corral OH"
Ⓑ Paint "Bridge No. 50-0383 R/L"
Ⓒ Concrete Barrier Type 736
Ⓓ Concrete Barrier Type 736SV
Ⓔ Temporary Railing Type K
Ⓕ Slope Paving
Ⓖ Structure Approach Type N(30D)
Ⓗ Remove and Replace Overhang
Ⓘ 2'-6" Crash Wall protection
Ⓙ Cable Railing
Ⓚ Soundwall, Height = 10'-0"

LEGEND:

- Existing Bridge
- Indicates Direction of Traffic
- Bridge Removal
- Closure Pour
- Indicates Point of Mininmum Vertical Clearance (Same as Existing)
- MBGR

DESIGN OVERSIGHT
6-27-12
SIGN OFF DATE

ADVANCE PLANNING STUDY SHEET (ENGLISH) (REV. 06-01-09)

DESIGNED BY	M. Ruvalcaba	DATE	4/6/12
DRAWN BY	P. Johnson	DATE	4/6/12
CHECKED BY	J. Rudolph	DATE	4/6/12
APPROVED	M. Mohseni	DATE	4/6/12

Mohsen Mohseni
PROJECT ENGINEER

ALTERNATIVE A, B AND C

PLANNING STUDY (SHEET No. 1)

BAKERSFIELD CORRAL OH (WIDEN)

BRIDGE NO. 50-0383RL	CU
SCALE: AS NOTED	EA 06-48460

FILE => &REQUEST

USERNAME => &USER DATE PLOTTED => &DATE TIME PLOTTED => &TIME

PREPARED FOR THE STATE OF CALIFORNIA - DEPARTMENT OF TRANSPORTATION

DIST.	COUNTY	ROUTE	POST MILES TOTAL PROJECT
06	KER	58	T31.7/R55.6

TRIP
900 Truxtun Ave, Suite 200
Bakersfield, CA 93301

PARSONS
2201 DUPONT DRIVE, SUITE 200
IRVINE, CA 92612

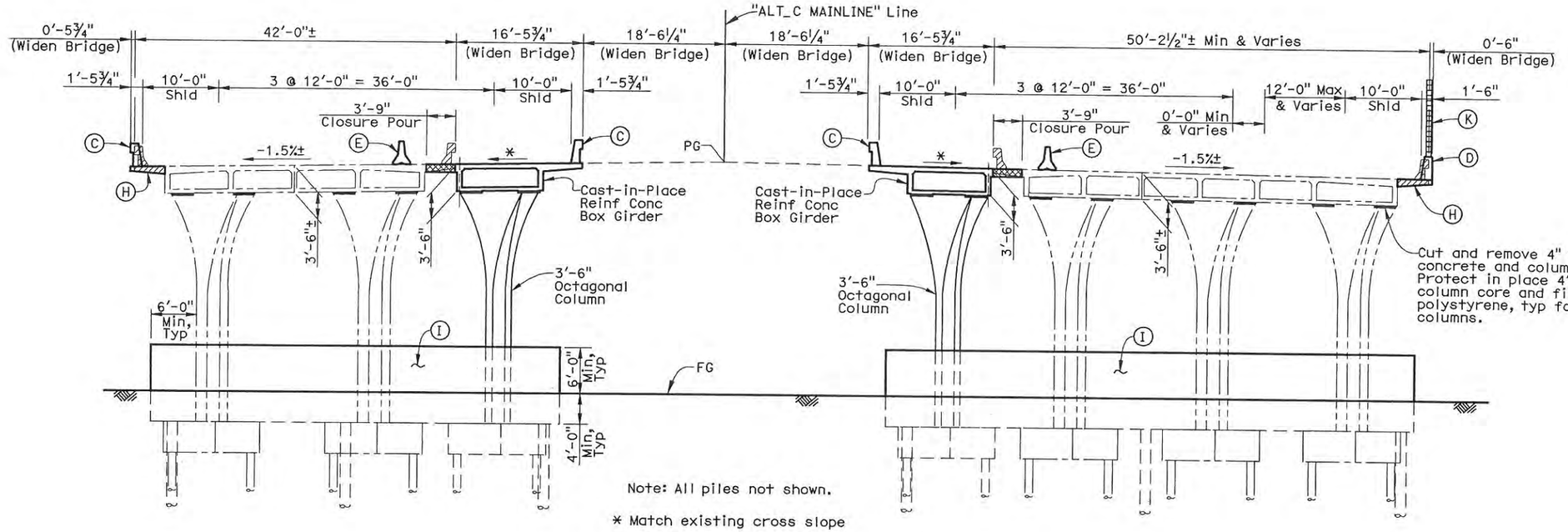

Note: All piles not shown.

* Match existing cross slope

TYPICAL SECTION

1/8" = 1'-0"

ALTERNATIVE A, B AND C

DESIGNED BY M. Ruvalcaba	DATE 4/6/12	Mohsen Mohseni PROJECT ENGINEER	PLANNING STUDY (SHEET No. 2)
DRAWN BY P. Johnson	DATE 4/6/12		BAKERSFIELD CORRAL OH (WIDEN)
CHECKED BY J. Rudolph	DATE 4/6/12		BRIDGE NO. 50-0383RL / CU
APPROVED M. Mohseni	DATE 4/6/12		SCALE: AS NOTED / EA 06-48460

DESIGN OVERSIGHT
6-22-12
SIGN OFF DATE

ADVANCE PLANNING STUDY SHEET (ENGLISH) (REV. 06-01-09)

FILE => 50383r1-a-gp02.dgn

USERNAME => p00042d2 DATE PLOTTED => 4/11/2012 TIME PLOTTED => 11:41:32 AM

PREPARED FOR THE STATE OF CALIFORNIA - DEPARTMENT OF TRANSPORTATION

DIST.	COUNTY	ROUTE	POST MILES TOTAL PROJECT
06	KER	58	T31.7/R55.4

TRIP
900 Truxtun Ave, Suite 200
Bakersfield, CA 93301

PARSONS
2201 DUPONT DRIVE, SUITE 200
IRVINE, CA 92612

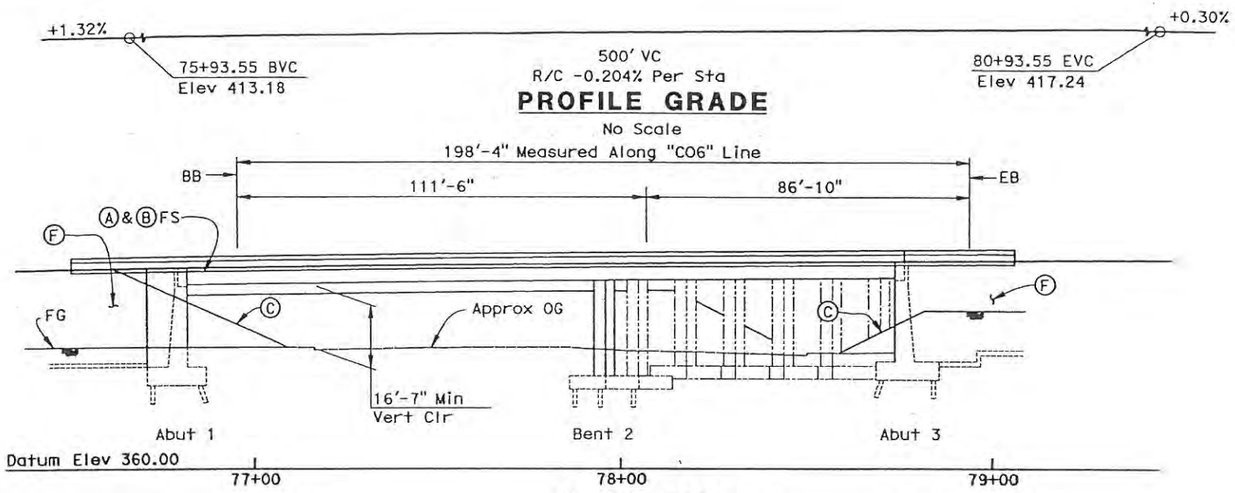

PROFILE GRADE

No Scale

ELEVATION

1" = 20'

Notes:

1. Vehicular traffic will pass through construction site.
2. Not all piles shown.

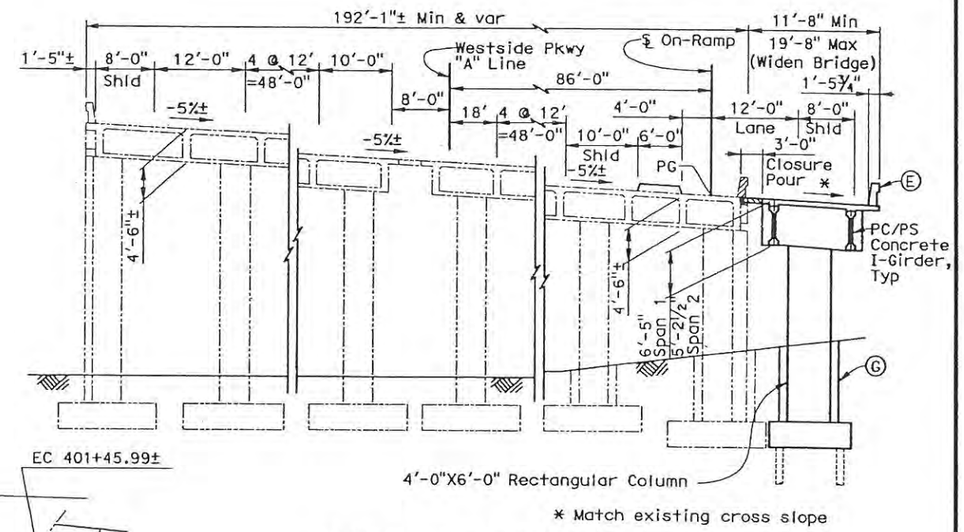

TYPICAL SECTION

1" = 10'

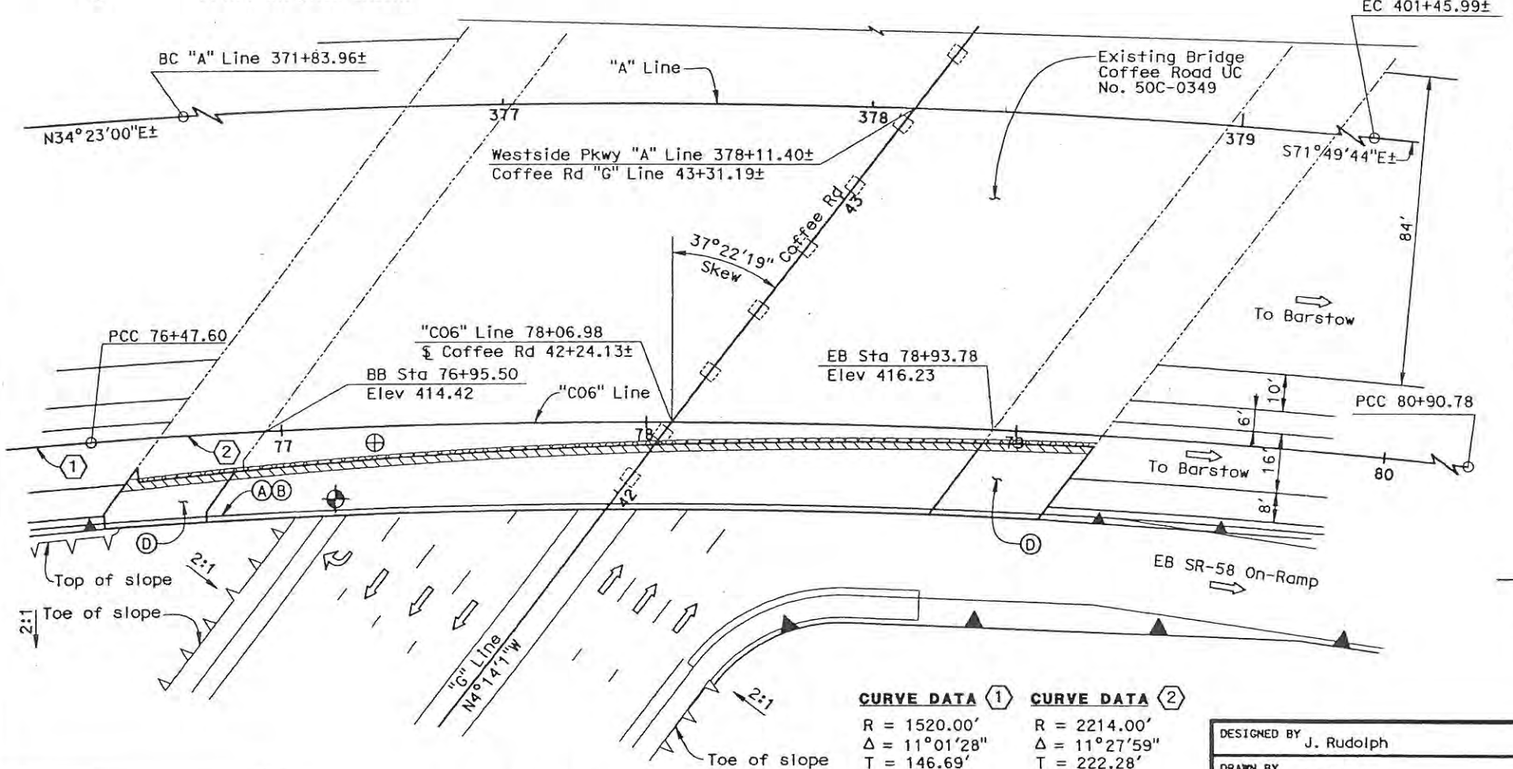

PLAN

1" = 20'

CURVE DATA (1)
R = 1520.00'
Δ = 11°01'28"
T = 146.69'
L = 292.47'

CURVE DATA (2)
R = 2214.00'
Δ = 11°27'59"
T = 222.28'
L = 443.08'

NOTES

(A) Paint "Coffee Road UC"
(B) Paint "Br. No. 50C-0349"
(C) Slope Paving - Full slope
(D) Structure Approach, Type N(30S)
(E) Concrete Barrier Type 736
(F) Retaining Wall
(G) Column Isolation Casing

LEGEND

- Indicates Existing Bridge
- Indicates Direction of Traffic
- Indicates Point of Minimum Vertical Clearance
- Indicates Exist Point of Minimum Vertical Clearance (17'-7"±)
- Retaining Wall
- Bridge Removal
- Closure Pour

DATE OF ESTIMATE	9-19-11
BRIDGE REMOVAL	= 200 SF
STRUCTURE DEPTH	= 5'-2½" thru 6'-5"
LENGTH	= 198'-4"
WIDTH	= 11'-8" Min
AREA	= 3,530 SF
COST/SF INCLUDING 10% MOBILIZATION & 25% CONTINGENCY BRIDGE REMOVAL	= $272/SF
TOTAL COST	= $960,000

ALTERNATIVE A

DESIGN OVERSIGHT
6-22-12
SIGN OFF DATE

DESIGNED BY J. Rudolph	DATE 8/19/11	Mohsen Mohseni PROJECT ENGINEER	PLANNING STUDY
DRAWN BY A. Segura	DATE 8/19/11		COFFEE ROAD UC(WIDEN)
CHECKED BY M. Mohseni	DATE 9/14/11		BRIDGE NO. 50C-0349 / CU
APPROVED M. Mohseni	DATE 9/23/11		SCALE: As Noted / EA 06-48460

ADVANCE PLANNING STUDY SHEET (ENGLISH) (REV. 06-01-09)

FILE => H:\646593_CENTENNIAL\SHT\STRUCTURES\APS\Coffee Road UC\50C_xxxx_gp01.dgn

USERNAME => p0021213 DATE PLOTTED => 9/22/2011 TIME PLOTTED => 7:16:56 AM

PREPARED FOR THE STATE OF CALIFORNIA - DEPARTMENT OF TRANSPORTATION

DIST.	COUNTY	ROUTE	POST MILES TOTAL PROJECT
06	KER	58	T31.7/R55.4

TRIP
900 Truxtun Ave, Suite 200
Bakersfield, CA 93301

PARSONS
2201 DUPONT DRIVE, SUITE 200
IRVINE, CA 92612

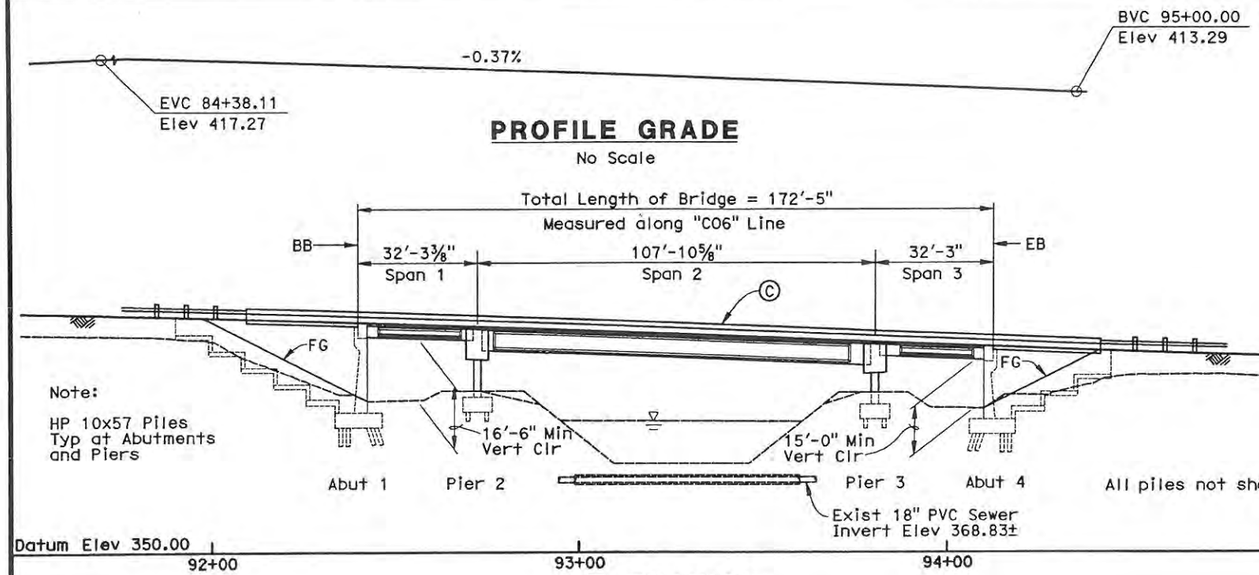

PROFILE GRADE

No Scale

ELEVATION

1" = 20'

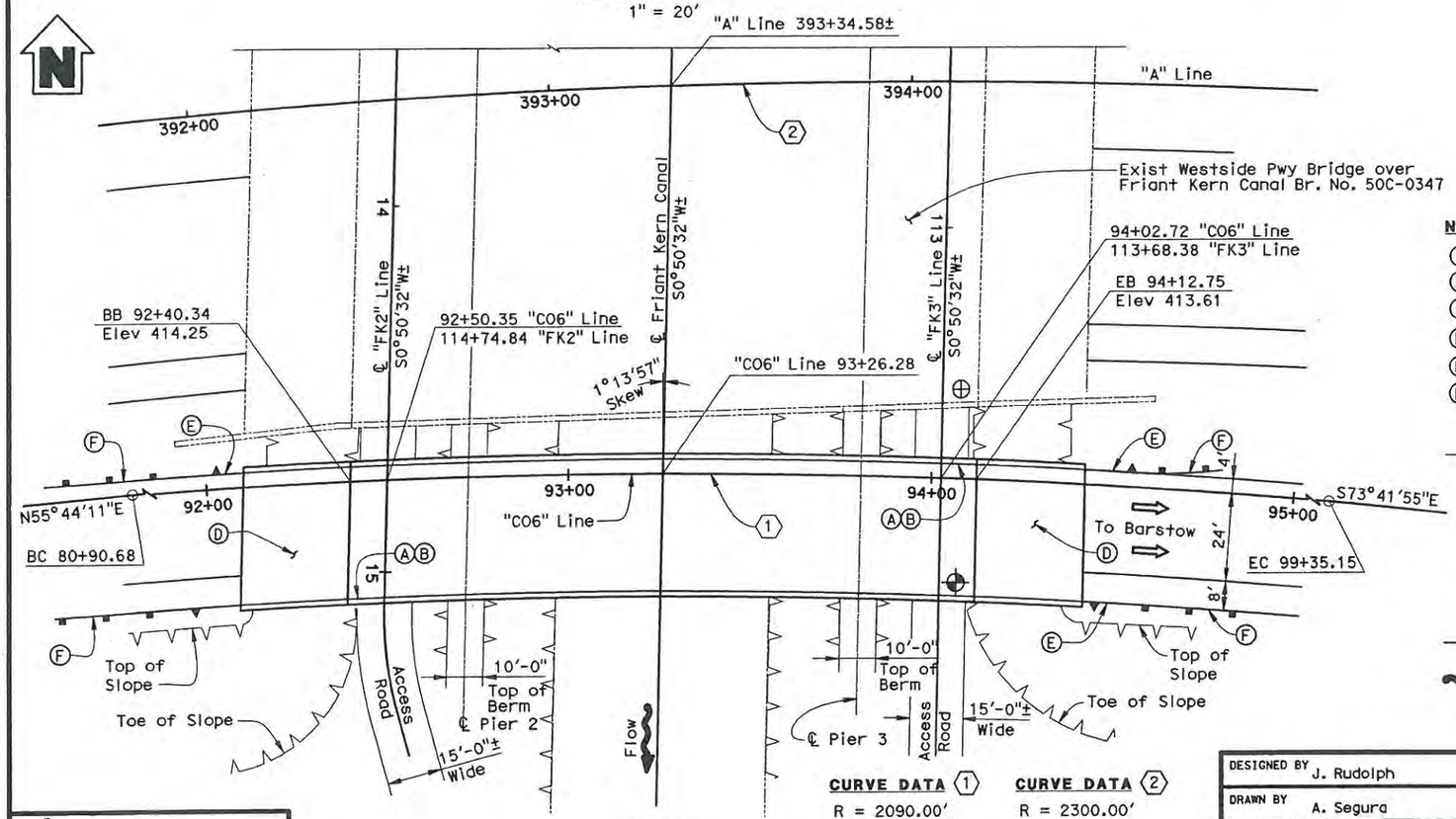

PLAN

1" = 20'

CURVE DATA ① R = 2090.00' Δ = 50°33'53" T = 987.15' L = 1844.47'

CURVE DATA ② R = 2300.00' Δ = 73°47'16" T = 1726.51' L = 2962.03'

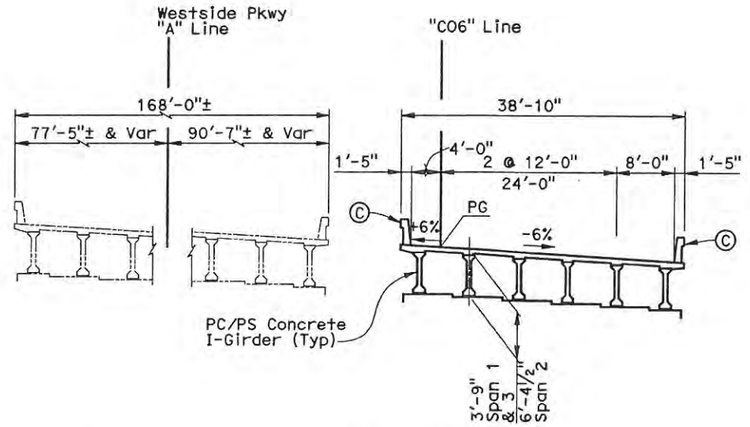

TYPICAL SECTION

1" = 10'

(Span 2 shown, Span 1 Similar with depth of 3'-9")

NOTES

Ⓐ Paint "Friant Kern Canal Bridge On-Ramp Connector"
Ⓑ Paint "Br. No. 50C-xxxx"
Ⓒ Concrete Barrier Type 742
Ⓓ Structure Approach, Type N (30S)
Ⓔ Retaining Wall
Ⓕ MBGR, see "Road Plans"

LEGEND

——— Indicates Existing Bridge
⇨ Indicates Direction of Travel
⊕ Indicates Point of Minimum Vertical Clearance
⊕ Indicates Exist Point of Minimum Vertical Clearance (18'-5"±)
—▲— Retaining Wall
Indicates Direction of Flow
High Water Elevation 385.5±

DATE OF ESTIMATE	9-13-11
STRUCTURE DEPTH	= 6'-4½" & 3'-9"
LENGTH	= 172'-5"
WIDTH	= 38'-10"
AREA	= 6724 SF
COST/SF INCLUDING 10% MOBILIZATION & 25% CONTINGENCY	= $245/SF
TOTAL COST	= $1,650,000

ALTERNATIVE A

DESIGN OVERSIGHT
6-22-12
SIGN OFF DATE

DESIGNED BY J. Rudolph	DATE 8/23/11	Mohsen Mohseni PROJECT ENGINEER	**PLANNING STUDY**
DRAWN BY A. Segura	DATE 8/23/11		**FRIANT KERN CANAL BRIDGE ON-RAMP CONNECTOR**
CHECKED BY M. Mohseni	DATE 9/19/11		BRIDGE NO. 50C-xxxx / CU
APPROVED M. Mohseni	DATE 9/23/11		SCALE: As Noted / EA 06-48460

ADVANCE PLANNING STUDY SHEET (ENGLISH) (REV. 06-01-09)

FILE => H:\646593_CENTENNIAL\SHT\STRUCTURES\APS\Friant Kern Canal\50C_xxxx_gp01.dgn

USERNAME => p0038016 DATE PLOTTED => 9/21/2011 TIME PLOTTED => 11:37:07 PM

PREPARED FOR THE STATE OF CALIFORNIA - DEPARTMENT OF TRANSPORTATION

DIST.	COUNTY	ROUTE	POST MILES TOTAL PROJECT
06	KER	58	33.1/55.4

TRIP
900 Truxtun Ave. Suite 200
Bakersfield, CA 93301

PARSONS
2201 DUPONT DRIVE, SUITE 200
IRVINE, CA 92612

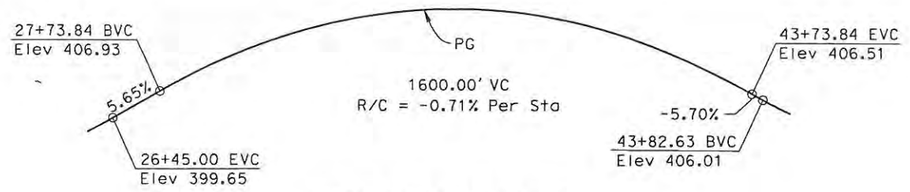

PROFILE GRADE
No Scale

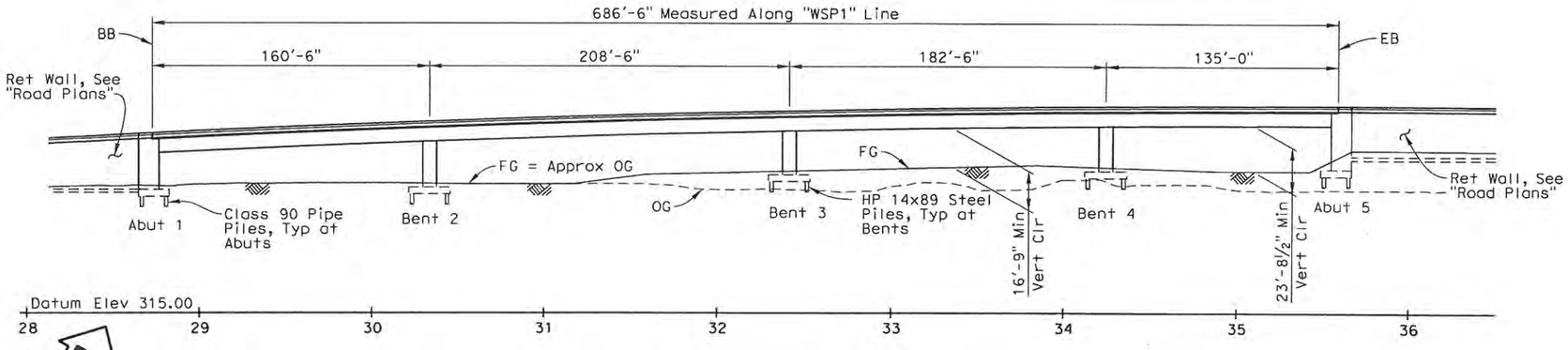

DEVELOPED ELEVATION
1" = 40'

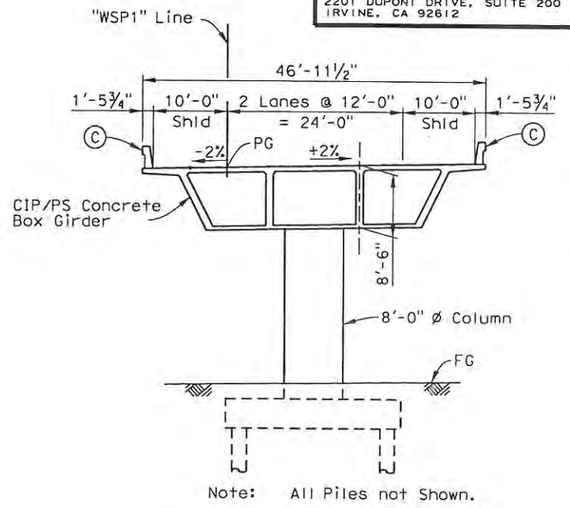

Note: All Piles not Shown.

TYPICAL SECTION
1" = 10'

CURVE DATA (1)
R = 1600.00'
Δ = 32°00'43"
T = 458.97'
L = 893.94'

CURVE DATA (2)
R = 3000.00'
Δ = 14°58'41"
T = 401.31'
L = 784.25'

CURVE DATA (3)
R = 3047.00'
Δ = 10°36'47"
T = 285.48'
L = 564.41'

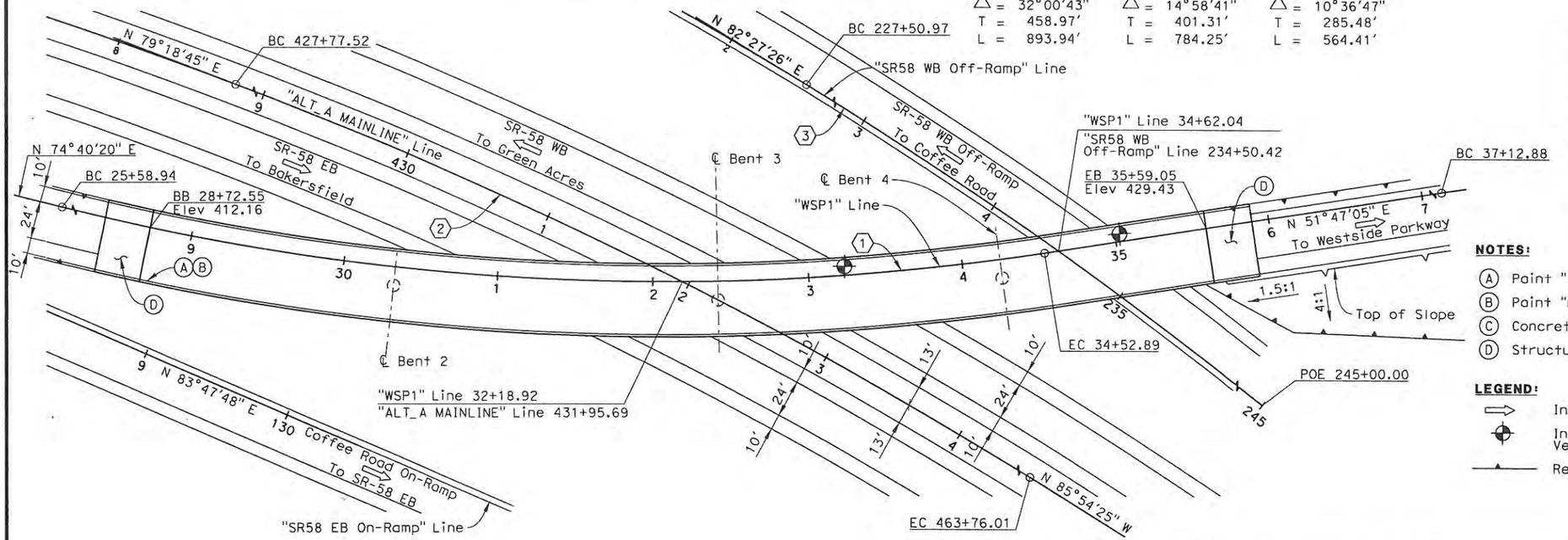

PLAN
1" = 40'

Notes:
1. Traffic will not Pass Through Construction Site.
2. Construct SR-58/Westside Parkway Connector Separation During SR-58 Construction.

DATE OF ESTIMATE	= 03/26/12
BRIDGE REMOVAL	= N/A
STRUCTURE DEPTH	= 8'-6"
LENGTH	= 686'-6"
WIDTH	= 46'-11½"
AREA OF WIDENINGS	= 32,237 SF
COST/SF INCLUDING 10% MOBILIZATION & 25% CONTINGENCY	= $ 221
TOTAL COST	= $ 7,140,000

NOTES:
- (A) Paint "SR-58/Westside Parkway Connector Separation"
- (B) Paint "Bridge No. 50-xxxx"
- (C) Concrete Barrier Type 736
- (D) Structure Approach Type N(30S)

LEGEND:
- ⇨ Indicates Direction of Traffic
- ⌖ Indicates Point of Minimum Vertical Clearance
- Retaining Wall

ALTERNATIVE A

DESIGN OVERSIGHT
SIGN OFF DATE

DESIGNED BY	M. Ruvalcaba	DATE	03/26/12
DRAWN BY	J. Gilmore	DATE	03/26/12
CHECKED BY	M. Mohseni	DATE	03/26/12
APPROVED	M. Mohseni	DATE	03/26/12

Mohsen Mohseni
PROJECT ENGINEER

PLANNING STUDY
SR-58/WESTSIDE PARKWAY CONNECTOR SEPARATION

BRIDGE NO. 50-XXXX	CU
SCALE: As Noted	EA 06-48460

ADVANCE PLANNING STUDY SHEET (ENGLISH) (REV. 06-01-09)

FILE => C:\PW_Working\PTGpwlseb\p0038090\dms90794\Alt A West-Parkway-gp01.dgn

USERNAME => p0038090 DATE PLOTTED => 3/27/2012 TIME PLOTTED => 2:51:09 PM

PREPARED FOR THE STATE OF CALIFORNIA - DEPARTMENT OF TRANSPORTATION

R/C = -.67% Per Sta
1400.00' VC

PROFILE
No Scale

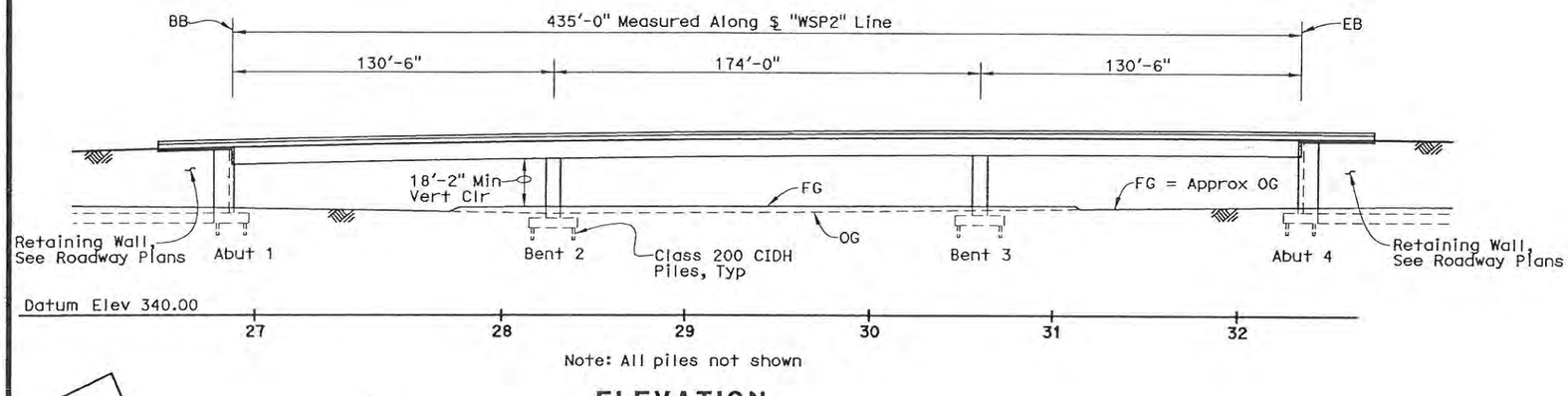

Note: All piles not shown

ELEVATION
1" = 30'

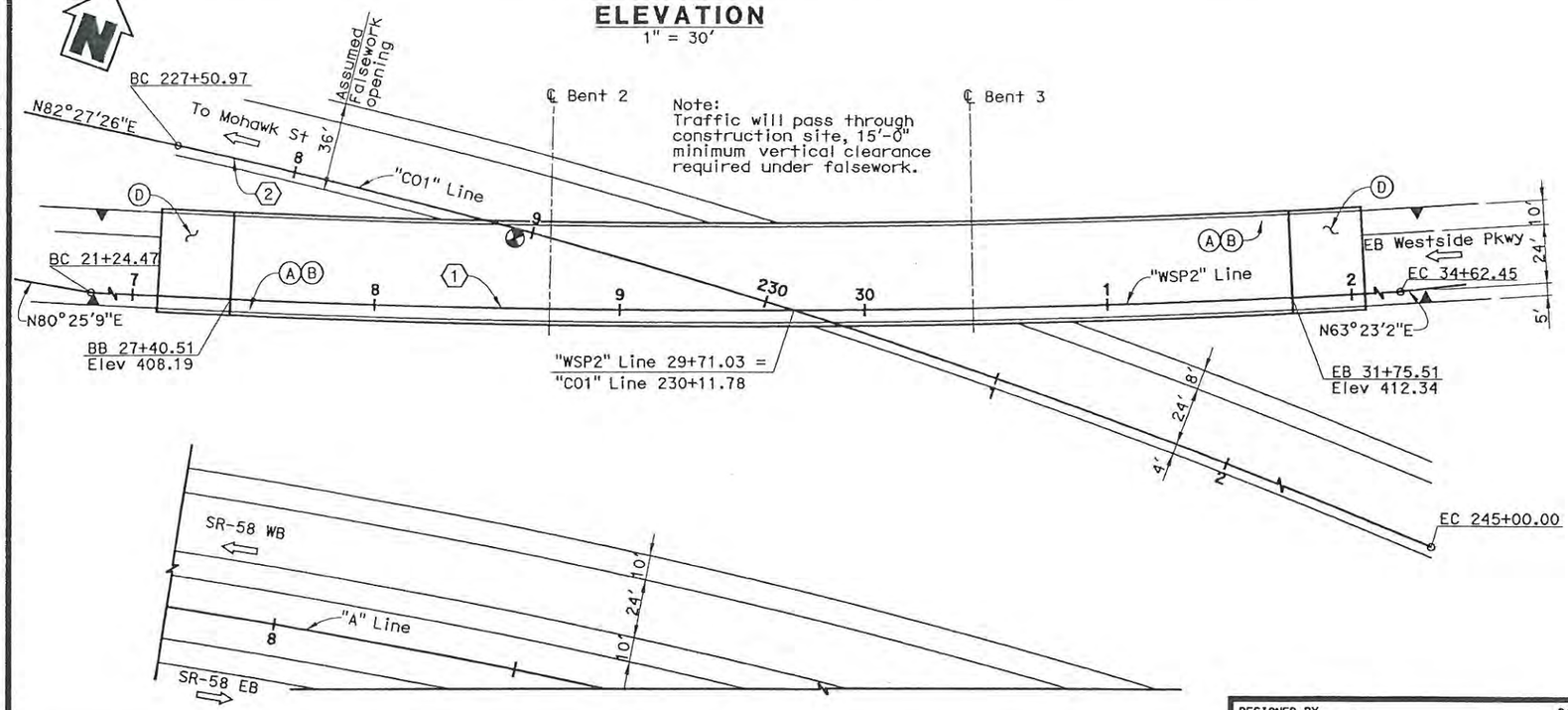

PLAN
1" = 30'

DATE OF ESTIMATE	= 7/7/11
STRUCTURE DEPTH	= 7'-0"
LENGTH	= 435'-0"
WIDTH	= 38'-11½"
AREA	= 16,947 SF
COST/SF INCLUDING 10% MOBILIZATION & 25% CONTINGENCY	= $ 167
TOTAL COST	= $ 3,040,000

DIST.	COUNTY	ROUTE	POST MILES TOTAL PROJECT
06	KER	58	R49.81/ R55.4

TRIP
900 Truxtun Ave, Suite 200
Bakersfield, CA 93301

PARSONS
2201 DUPONT DRIVE, SUITE 200
IRVINE, CA 92612

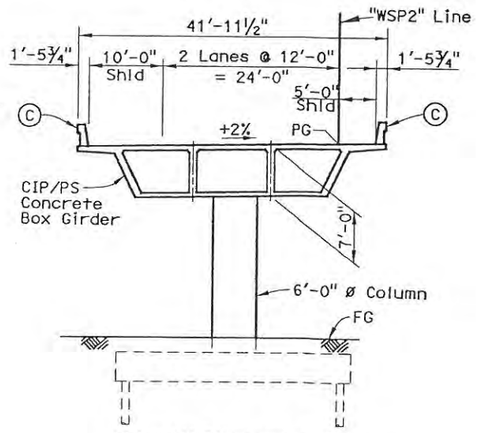

Note: All Piles not Shown

TYPICAL SECTION
1" = 10'

CURVE DATA (1)	CURVE DATA (2)
R = 4500.00	R = 3047.00
△ = 17°28'49"	△ = 32°53'20"
T = 691.83'	T = 899.35'
L = 1372.91'	L = 1749.00'

NOTES:

(A) Paint "Westside Parkway On-Ramp Connector OC"
(B) Paint "Bridge No. 50-xxxx"
(C) Concrete Barrier Type 736
(D) Structure Approach Type N(30S)

LEGEND:

⇨ Indicates Direction of Traffic
Indicates Point of Minimum Vertical Clearance
Indicates Retaining Wall

ALTERNATIVE A

DESIGNED BY J. Fix	DATE 7/7/11	Mohsen Mohseni PROJECT ENGINEER	**PLANNING STUDY**
DRAWN BY P. Johnson	DATE 7/19/11		WESTSIDE PARKWAY ON-RAMP CONNECTOR OC
CHECKED BY M. Mohseni	DATE 8/16/11		BRIDGE NO. 50-XXXX / CU
APPROVED M. Mohseni	DATE 8/17/11		SCALE: As Noted / EA 06-48460

DESIGN OVERSIGHT
8-22-12
SIGN OFF DATE

ADVANCE PLANNING STUDY SHEET (ENGLISH) (REV. 06-01-09)

FILE => $REQUEST

USERNAME => @USER DATE PLOTTED => $DATE TIME PLOTTED => @TIME

PREPARED FOR THE STATE OF CALIFORNIA - DEPARTMENT OF TRANSPORTATION

DIST.	COUNTY	ROUTE	POST MILES TOTAL PROJECT
06	KER	58	33.1/55.4

TRIP
900 Truxtun Ave, Suite 200
Bakersfield, CA 93301

PARSONS
2201 DUPONT DRIVE, SUITE 200
IRVINE, CA 92612

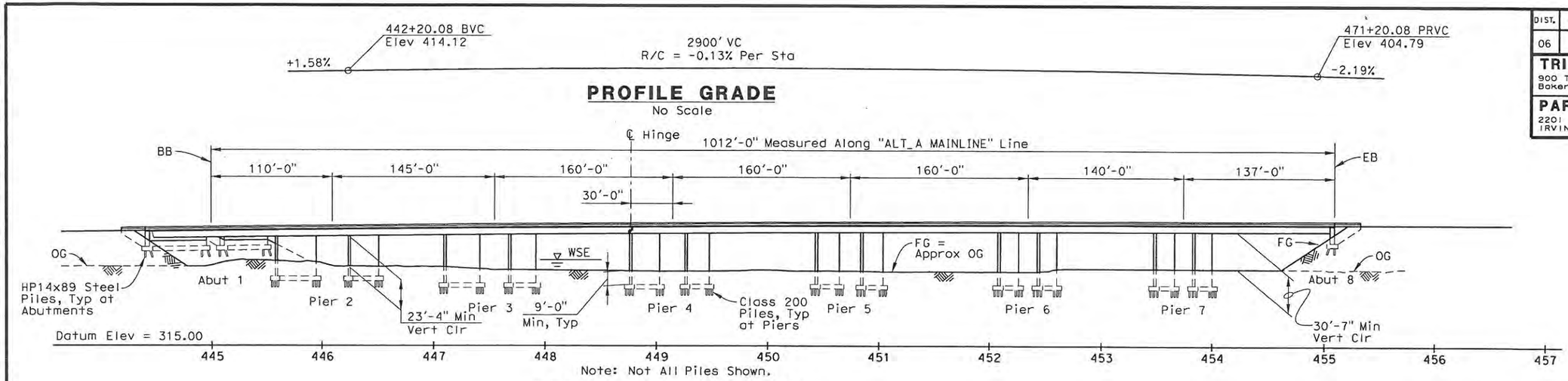

NOTES:

Ⓐ Paint "Kern River Bridge"
Ⓑ Paint "Bridge No. 50-XXXXR/L"
Ⓒ Concrete Barrier Type 736
Ⓓ Structure Approach Type N(30S)

LEGEND

- Indicates Direction of Traffic
- Indicates Point of Minimum Vertical Clearance
- Indicates Direction of Flow
- Concrete Barrier Type 60
- WSE — Water Surface Elevation (WSE) at Bridge for 100 year design flood = 391.25 Average Mean Sea Level

DATE OF ESTIMATE	= 3-26-12
BRIDGE REMOVAL	= N/A
STRUCTURE DEPTH	= 6'-6"
LENGTH	= 1012'-0"
WIDTH	= 140'-9½"
AREA OF WIDENINGS	= 142,480 SF
COST/SF INCLUDING 10% MOBILIZATION & 25% CONTINGENCY	= $ 187/SF
TOTAL COST	= $ 26,710,000

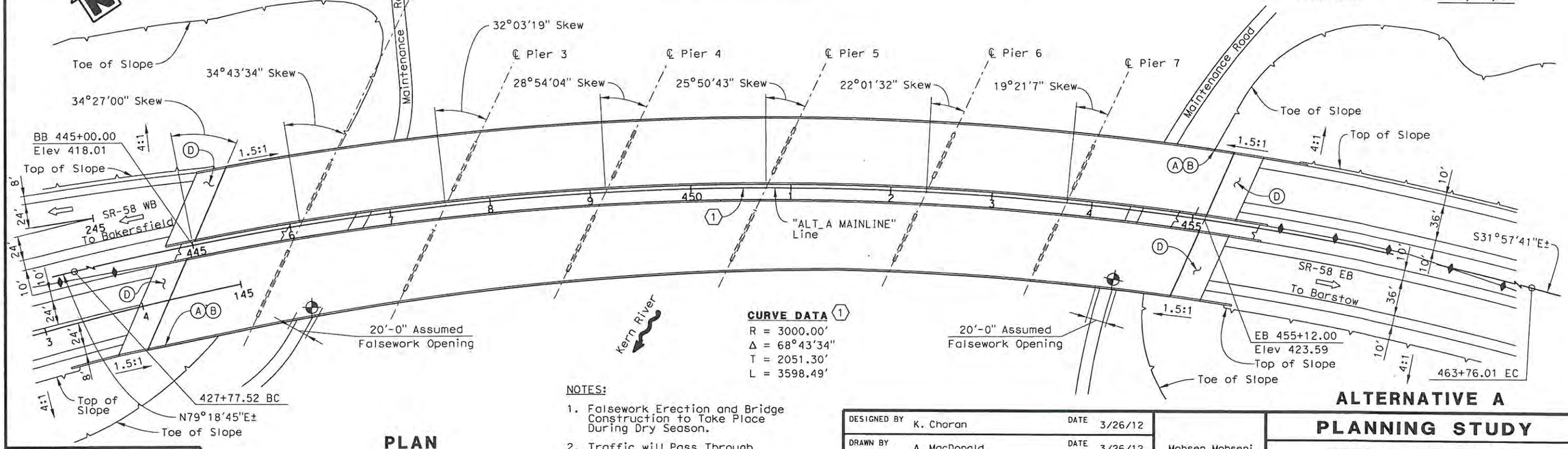

CURVE DATA ①
R = 3000.00'
Δ = 68°43'34"
T = 2051.30'
L = 3598.49'

NOTES:

1. Falsework Erection and Bridge Construction to Take Place During Dry Season.
2. Traffic will Pass Through Construction Site, 15'-0" Minimum Vertical Clearance Required Under Falsework.

PLAN
1" = 50'

ALTERNATIVE A

DESIGNED BY	K. Charan	DATE	3/26/12
DRAWN BY	A. MacDonald	DATE	3/26/12
CHECKED BY	R. Mathur	DATE	3/26/12
APPROVED	M. Mohensi	DATE	3/26/12

Mohsen Mohseni
PROJECT ENGINEER

PLANNING STUDY
KERN RIVER BRIDGE

BRIDGE NO. 50-XXXX R/L	CU
SCALE: As Noted	EA 06-48460

DESIGN OVERSIGHT
6-22-12
SIGN OFF DATE

ADVANCE PLANNING STUDY SHEET (ENGLISH) (REV. 06-01-09)

FILE => C:\PW_Working\PTGpwlseb\p0038090\dms90794\Alt A Kern River-GP01.dgn

USERNAME => p0038090 DATE PLOTTED => 3/27/2012 TIME PLOTTED => 3:06:47 PM

DIST.	COUNTY	ROUTE	POST MILES TOTAL PROJECT
06	KER	58	33.1/55.4

TRIP
900 Truxtun Ave, Suite 200
Bakersfield, CA 93301

PARSONS
2201 DUPONT DRIVE, SUITE 200
IRVINE, CA 92612

NOTES:

Ⓒ Concrete Barrier Type 736

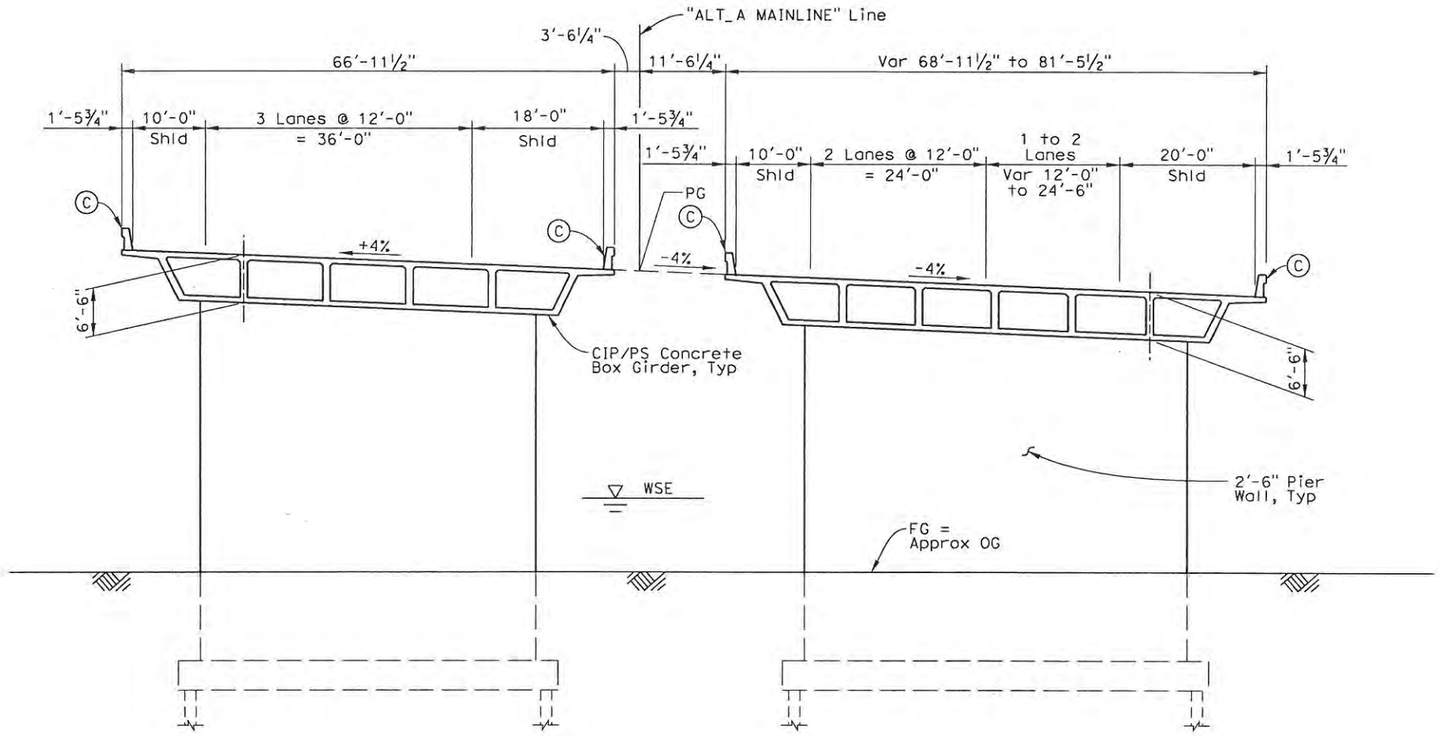

NOTE: All Piles not Shown.

TYPICAL SECTION
1" = 10'

PREPARED FOR THE STATE OF CALIFORNIA - DEPARTMENT OF TRANSPORTATION

DESIGN OVERSIGHT
6-27-12
SIGN OFF DATE

ADVANCE PLANNING STUDY SHEET (ENGLISH) (REV. 06-01-09)

ALTERNATIVE A

DESIGNED BY	K. Charan	DATE	3/26/12
DRAWN BY	A. MacDonald	DATE	3/26/12
CHECKED BY	R. Mathur	DATE	3/26/12
APPROVED	M. Mohensi	DATE	3/26/12

Mohsen Mohseni
PROJECT ENGINEER

PLANNING STUDY
KERN RIVER BRIDGE

BRIDGE NO. 50-XXXX R/L	CU
SCALE: As Noted	EA 06-48460

FILE => C:\PW_Working\PTGpwiseb\p0038090\dms90794\Alt A Kern River-Sect.dgn

USERNAME => p0038090 DATE PLOTTED => 3/27/2012 TIME PLOTTED => 2:30:53 PM

PREPARED FOR THE STATE OF CALIFORNIA - DEPARTMENT OF TRANSPORTATION

DIST.	COUNTY	ROUTE	POST MILES TOTAL PROJECT
06	KER	58	33.1/55.4

TRIP
900 Truxtun Ave. Suite 200
Bakersfield, CA 93301

PARSONS
2201 DUPONT DRIVE, SUITE 200
IRVINE, CA 92612

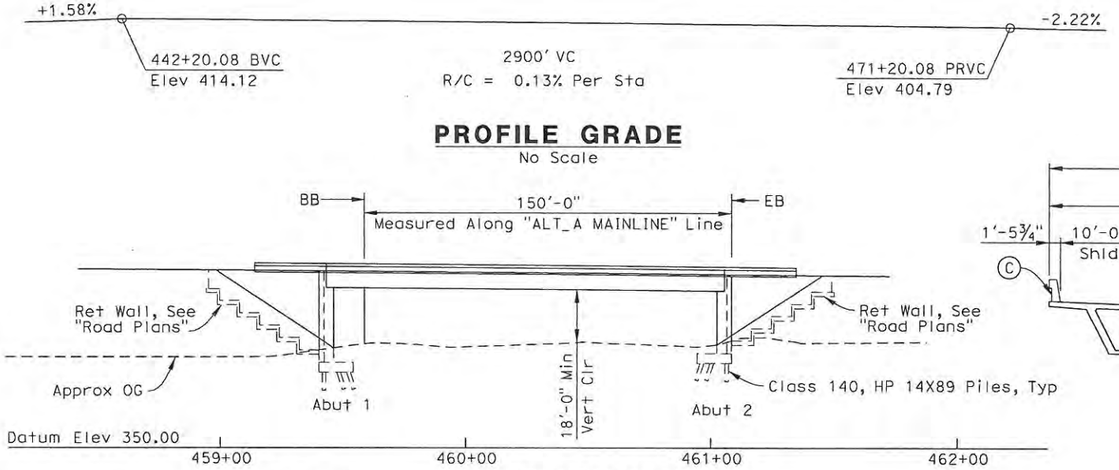

PROFILE GRADE
No Scale

Note: All piles not shown

ELEVATION
1" = 30'
(RT Bridge shown, LT Bridge similar)

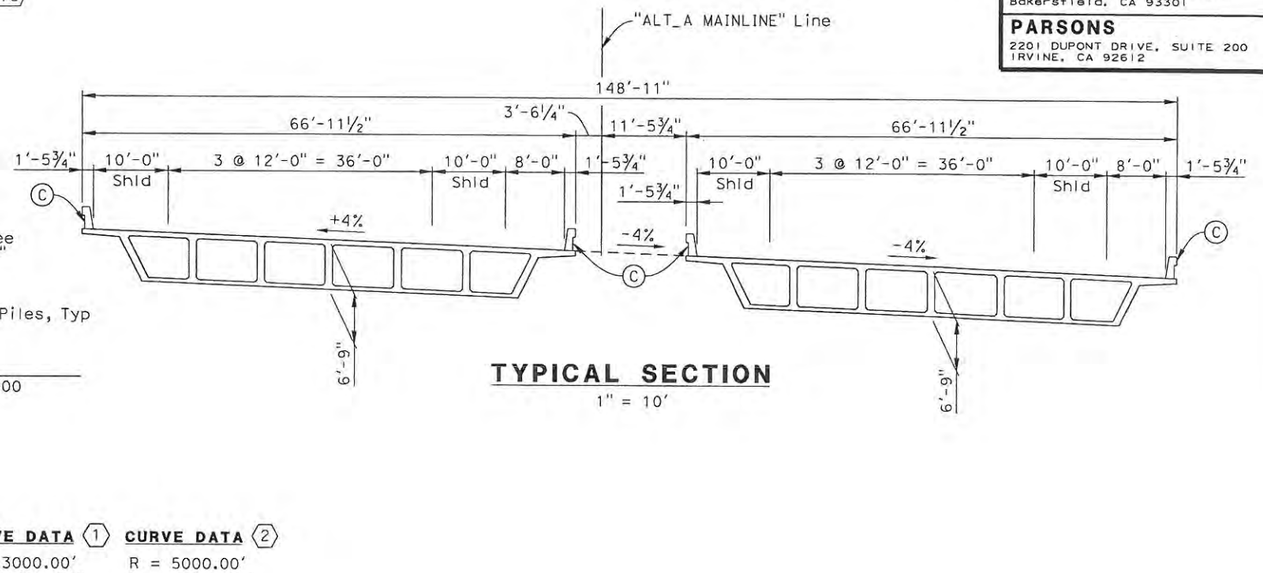

TYPICAL SECTION
1" = 10'

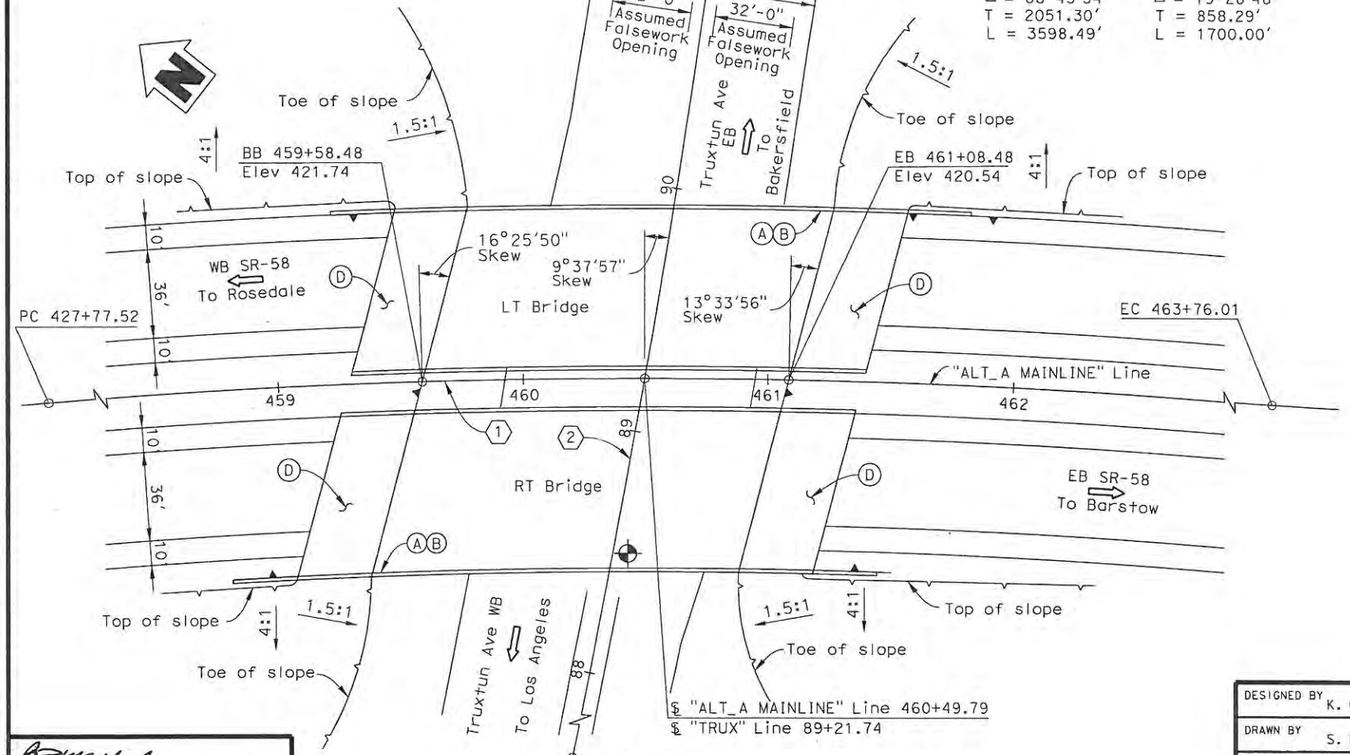

PLAN
1" = 30'

CURVE DATA (1)	CURVE DATA (2)
R = 3000.00'	R = 5000.00'
Δ = 68°43'34"	Δ = 19°28'48"
T = 2051.30'	T = 858.29'
L = 3598.49'	L = 1700.00'

NOTES
- (A) Paint "Truxtun Ave UC"
- (B) Paint "Br. No. 50-xxxx R/L"
- (C) Concrete Barrier Type 736
- (D) Structure Approach, Type N(30S)

LEGEND
- Indicates Direction of Traffic
- Indicates Point of Minimum Vertical Clearance
- Retaining Wall

DATE OF ESTIMATE	04/06/12
BRIDGE REMOVAL	= N/A
STRUCTURE DEPTH	= 6'-9"
LENGTH	= 150'-0"
WIDTH	= 133'-10"
AREA	= 20,088
COST/SF INCLUDING 10% MOBILIZATION & 25% CONTINGENCY	= $ 299/SF
TOTAL COST	= $ 6,000,000

NOTE:
Vehicular traffic will pass through construction site, 15'-0" minimum vertical clearance required under falsework.

DESIGN OVERSIGHT
6-22-12
SIGN OFF DATE

DESIGNED BY	K. Charan	DATE	04/06/12
DRAWN BY	S. Lee	DATE	04/06/12
CHECKED BY	R. Mathur	DATE	04/06/12
APPROVED	M. Mohseni	DATE	04/06/12

Mohsen Mohseni
PROJECT ENGINEER

ALTERNATIVE A
PLANNING STUDY
TRUXTUN AVENUE UC

BRIDGE NO. 50-xxxx R/L	CU
SCALE: AS NOTED	EA 06-48460

ADVANCE PLANNING STUDY SHEET (ENGLISH) (REV. 06-01-09)

FILE => C:\PW_WORKING\PtgpWlseb\p0038090\dms90794\Alt A Truxtun Ave UC-GP01.dgn

USERNAME => p0038090 DATE PLOTTED => 4/5/2012 TIME PLOTTED => 12:37:05 PM

PREPARED FOR THE STATE OF CALIFORNIA - DEPARTMENT OF TRANSPORTATION

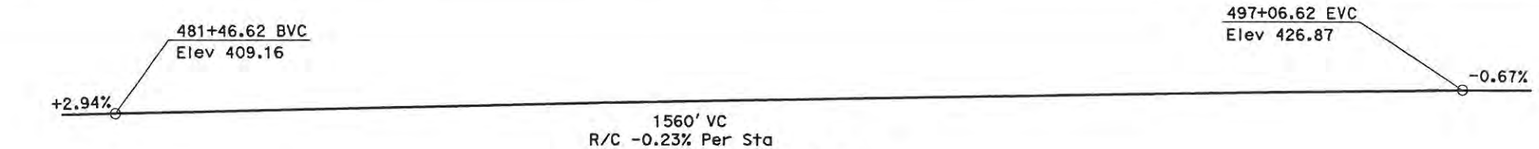

PROFILE GRADE

No Scale

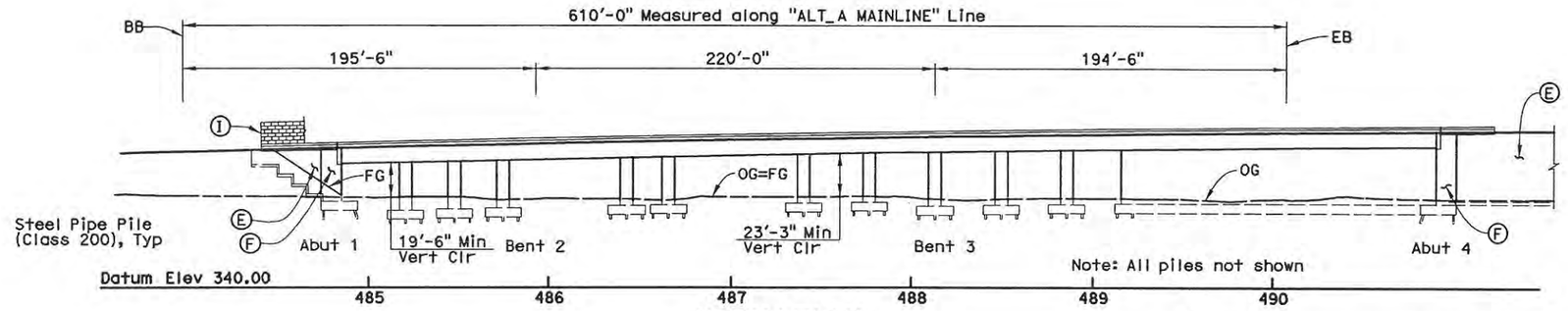

ELEVATION

1" = 40'

Note:

Vehicular traffic will pass under construction (Lennox/California Ave). 15'-0" Minimum vertical clearance required under falsework.

* Assumed falsework opening on California Ave, 38'-0" Min each way: 3 lanes

* * Assumed falsework opening on Lennox Ave, 40'-0": 2 lanes +2'-8"-0" Shld

LEGEND

- Indicates Direction of Traffic
- Indicates Point of Minimum Vertical Clearance
- Indicates Retaining Wall

DIST.	COUNTY	ROUTE	POST MILES TOTAL PROJECT
06	KER	58	T31.7/R55.6

TRIP
900 Truxtun Ave, Suite 200
Bakersfield, CA 93301

PARSONS
2201 DUPONT DRIVE, SUITE 200
IRVINE, CA 92612

NOTES

(A) Paint "Lennox Ave & California Ave UC"
(B) Paint "Br. No. 50-0xxx"
(C) Concrete Barrier Type 736
(D) Structure Approach, Type N(30S)
(E) Retaining wall/MSE wall, see "Roadway Plans"
(F) Wingwall / Return wall
(G) Concrete Barrier Type 60A
(H) Concrete Barrier Type 736S
(I) Soundwall, Height = 12'-0"

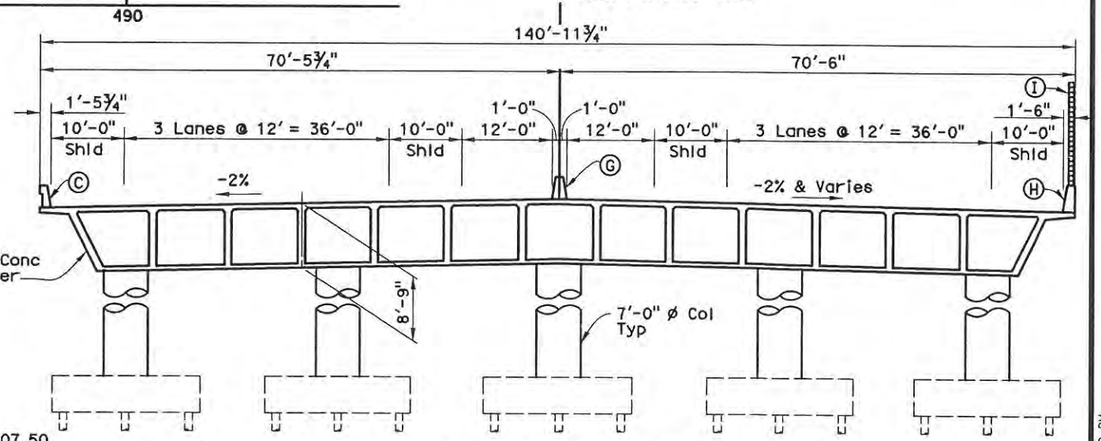

TYPICAL SECTION

1" = 10'

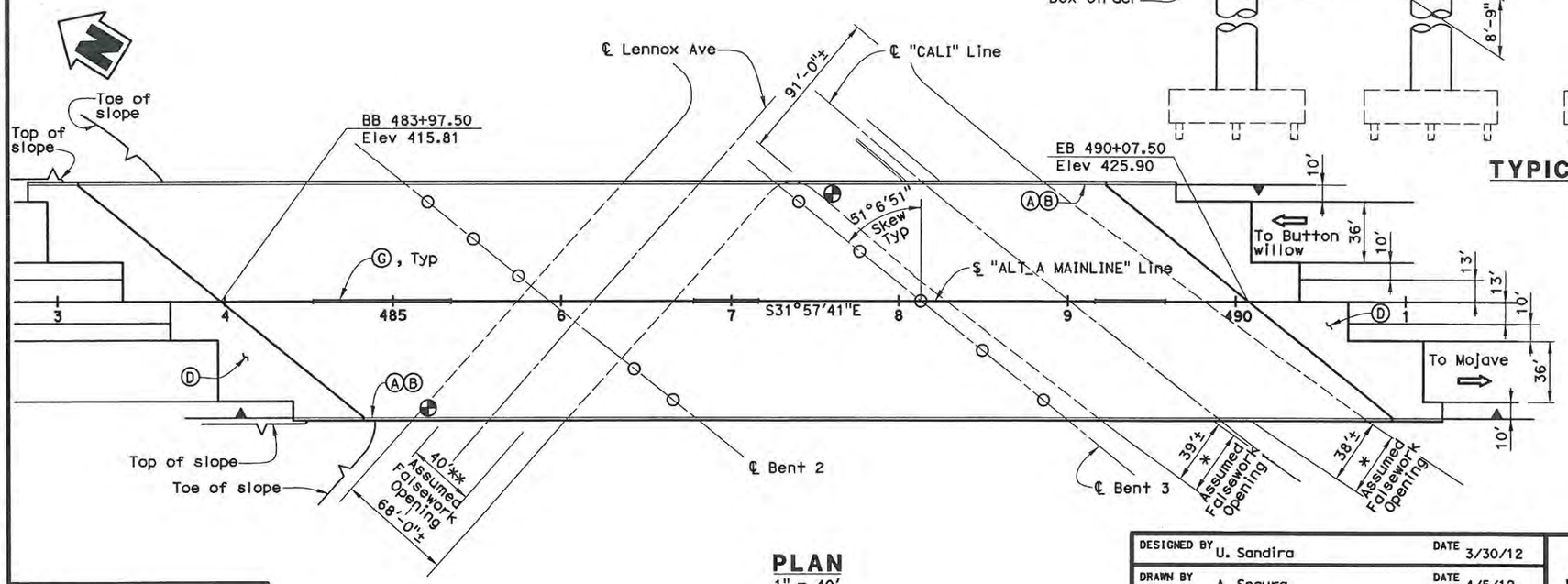

PLAN

1" = 40'

DATE OF ESTIMATE	3-23-12
STRUCTURE DEPTH	= 8'-9"
LENGTH	= 610'-0"
WIDTH	= 140'-11¾"
AREA	= 85,997 SF
COST/SF INCLUDING 10% MOBILIZATION & 25% CONTINGENCY	= $197/SF
TOTAL COST	= $16,970,000

DESIGN OVERSIGHT
6-22-12
SIGN OFF DATE

DESIGNED BY	U. Sandira	DATE 3/30/12
DRAWN BY	A. Segura	DATE 4/5/12
CHECKED BY	M. Mohseni	DATE 4/6/12
APPROVED	M. Mohseni	DATE 4/6/12

Mohsen Mohseni
PROJECT ENGINEER

ALTERNATIVE A

PLANNING STUDY

LENNOX AVE & CALIFORNIA UC

BRIDGE NO. 50-0XXX	CU
SCALE: As Noted	EA 06-48460

ADVANCE PLANNING STUDY SHEET (ENGLISH) (REV. 08-01-09)

FILE => H:\646593_CENTENNIAL\SHT\STRUCTURES\APS\Lennox Ave & California UC\55-xxxx-a-gp01.dgn

USERNAME => 36671 DATE PLOTTED => 4/5/2012 TIME PLOTTED => 1:45:09 PM

PREPARED FOR THE STATE OF CALIFORNIA - DEPARTMENT OF TRANSPORTATION

DIST.	COUNTY	ROUTE	POST MILES TOTAL PROJECT
06	KER	58	T31.7/R55.4

TRIP
900 Truxtun Ave, Suite 200
Bakersfield, CA 93301

PARSONS
2201 DUPONT DRIVE, SUITE 200
IRVINE, CA 92612

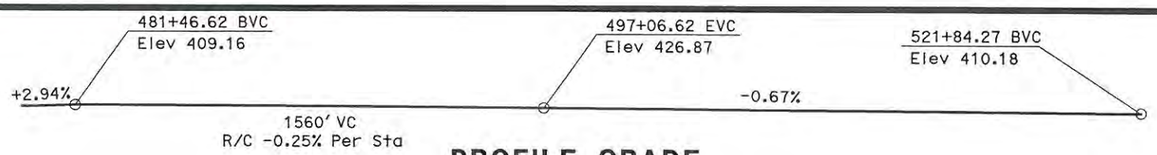

PROFILE GRADE
No Scale

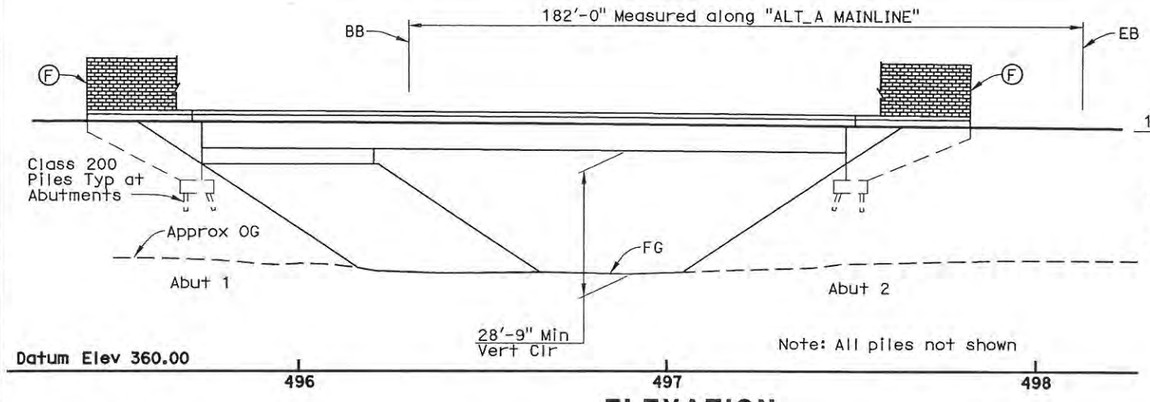

ELEVATION
1" = 20'

Note:
Traffic will pass through construction site, 15'-0" minimum vertical clearance required under falsework

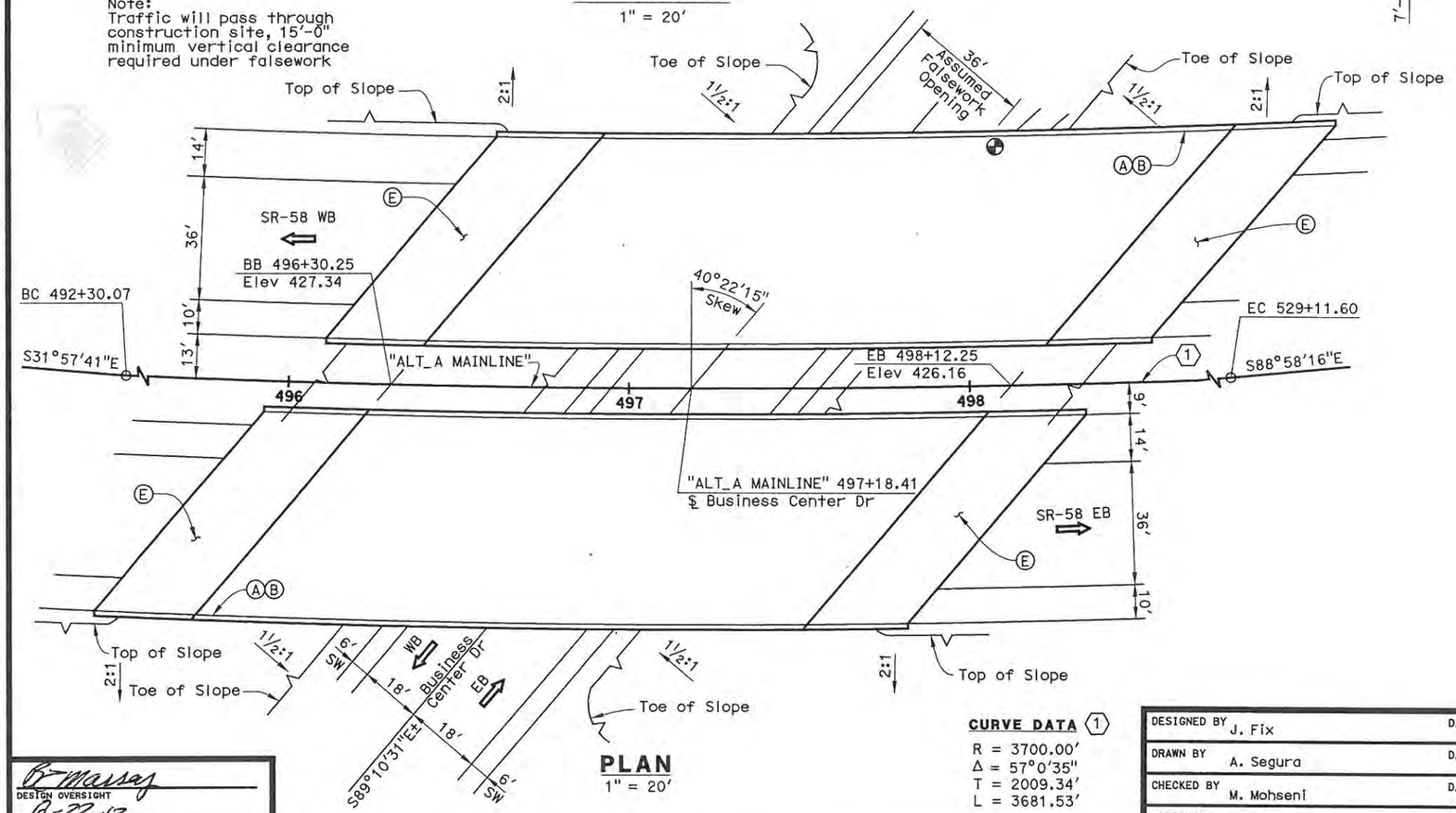

CURVE DATA (1)
R = 3700.00'
Δ = 57°0'35"
T = 2009.34'
L = 3681.53'

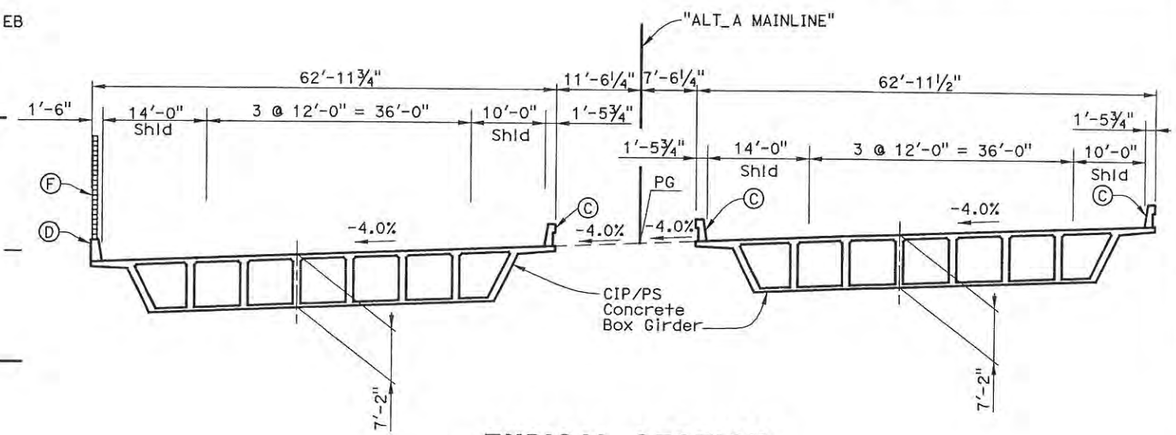

TYPICAL SECTION
1" = 10'

NOTES
(A) Paint "Business Center Drive UC"
(B) Paint "Br. No. 50-xxxx"
(C) Concrete Barrier Type 736
(D) Concrete Barrier Type 736SV
(E) Structure Approach, Type N(30S)
(F) Soundwall, Height = 14'-0"

LEGEND
⇨ Indicates Direction of Traffic
⊕ Indicates Point of Minimum Vertical Clearance

DATE OF ESTIMATE	3-7-12
STRUCTURE DEPTH	= 7'-2"
LENGTH	= 182'-0"
WIDTH	= 125'-11¼"
AREA	= 22,921 SF
COST/SF INCLUDING 10% MOBILIZATION & 25% CONTINGENCY	= $181
TOTAL COST	= $4,150,000

ALTERNATIVE A

DESIGNED BY	J. Fix	DATE	3/22/12
DRAWN BY	A. Segura	DATE	3/23/12
CHECKED BY	M. Mohseni	DATE	3/23/12
APPROVED	M. Mohseni	DATE	3/23/12

Mohsen Mohseni
PROJECT ENGINEER

PLANNING STUDY
BUSINESS CENTER DRIVE UC

BRIDGE NO. 50-xxxxL\R	CU
SCALE: As Noted	EA 06-48460

B Massey
DESIGN OVERSIGHT
6-22-12
SIGN OFF DATE

ADVANCE PLANNING STUDY SHEET (ENGLISH) (REV. 06-01-09)

FILE => 50_xxxx_gp01.dgn

USERNAME => p0004202 DATE PLOTTED => 3/27/2012 TIME PLOTTED => 2:13:33 PM

PREPARED FOR THE STATE OF CALIFORNIA - DEPARTMENT OF TRANSPORTATION

DIST.	COUNTY	ROUTE	POST MILES TOTAL PROJECT
06	KER	58	T51.3/R55.4

TRIP
900 Truxtun Ave, Suite 200
Bakersfield, CA 93301

PARSONS
2201 DUPONT DRIVE, SUITE 200
IRVINE, CA 92612

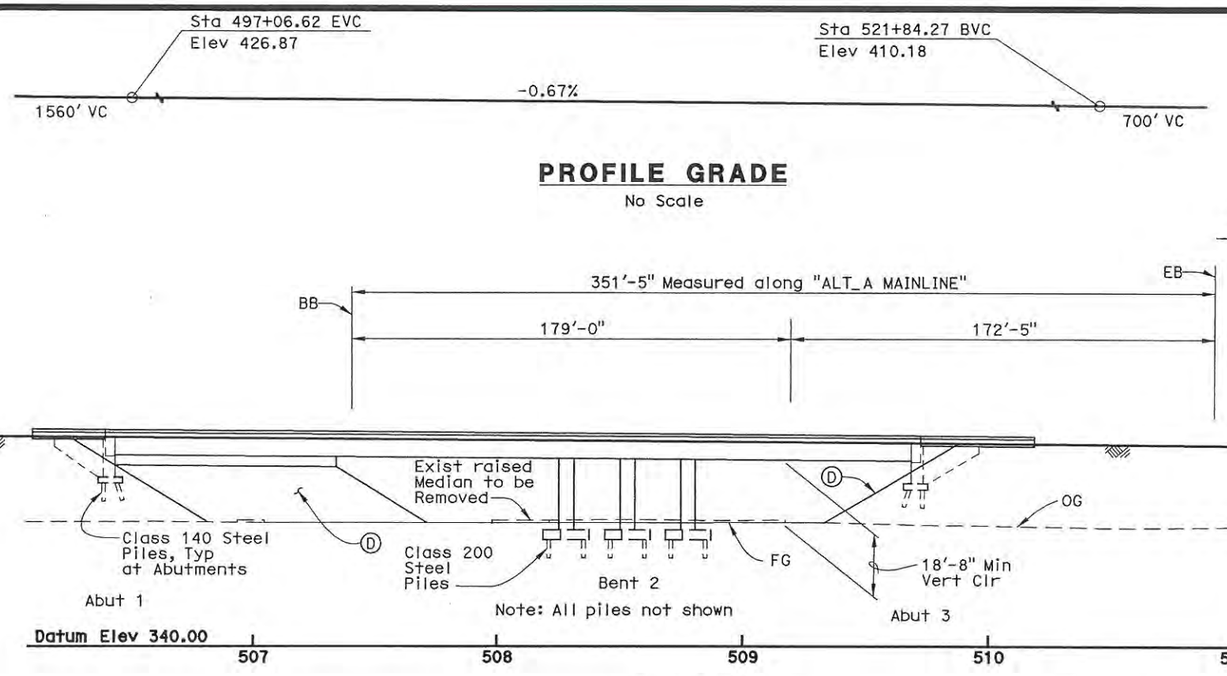

PROFILE GRADE
No Scale

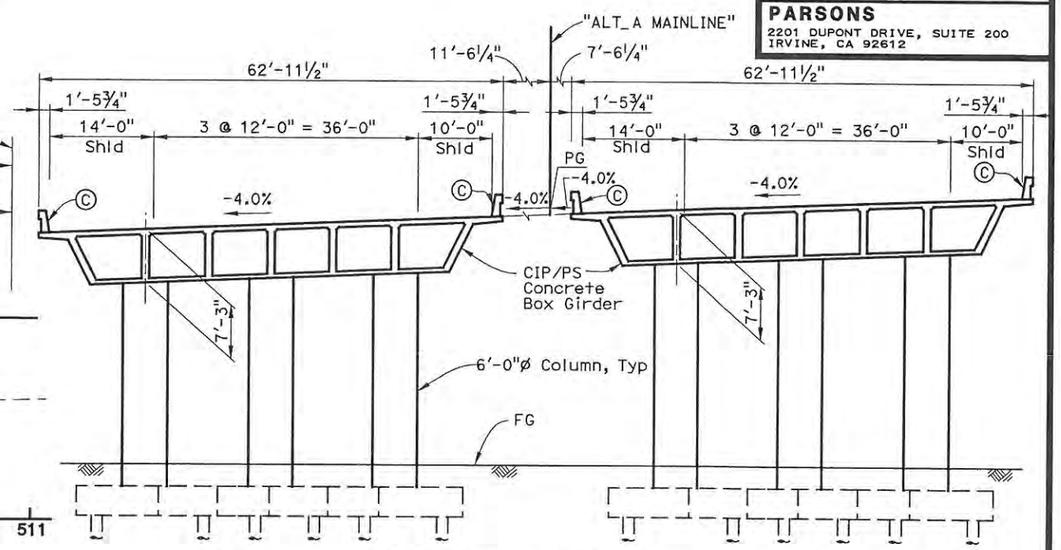

ELEVATION
1" = 30'

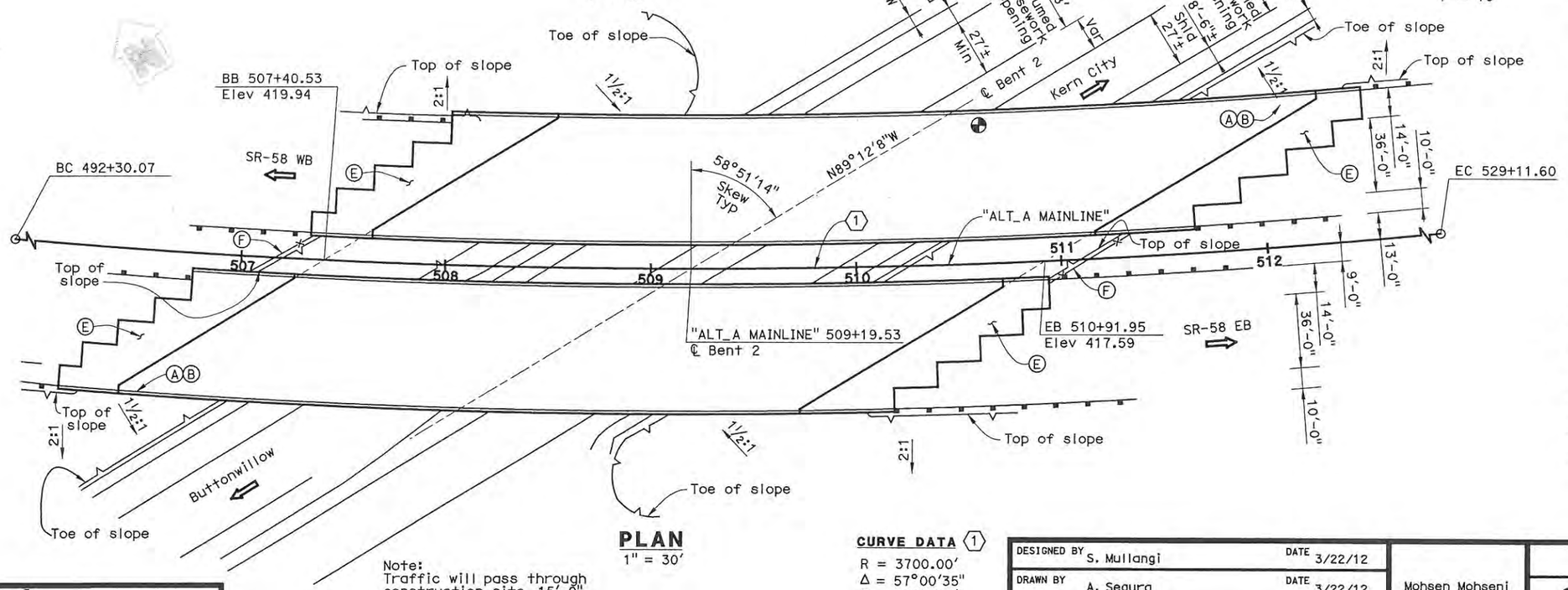

PLAN
1" = 30'

Note:
Traffic will pass through construction site, 15'-0" minimum vertical clearance required under falsework

TYPICAL SECTION
1" = 10'

Note: All piles not shown

NOTES

(A) Paint "Stockdale Hwy UC"
(B) Paint "Br. No. 50-xxxx R/L"
(C) Concrete Barrier Type 736
(D) Slope Paving
(E) Structure Approach, Type N(30S)
(F) Cable Railing

LEGEND

Indicates Direction of Traffic
Indicates Point of Minimum Vertical Clearance
MBGR

CURVE DATA (1)
R = 3700.00'
Δ = 57°00'35"
T = 2009.35'
L = 3681.53'

DATE OF ESTIMATE	3-12-12
BRIDGE REMOVAL	= N/A
STRUCTURE DEPTH	= 7'-3"
LENGTH	= 351'-5"
WIDTH	= 125'-11"
AREA	= 44,251 SF
COST/SF INCLUDING 10% MOBILIZATION & 25% CONTINGENCY	= $216/SF
TOTAL COST	= $9,540,000

DESIGN OVERSIGHT
6-22-12
SIGN OFF DATE

DESIGNED BY	S. Mullangi	DATE 3/22/12
DRAWN BY	A. Segura	DATE 3/22/12
CHECKED BY	M. Mohseni	DATE 3/23/12
APPROVED	M. Mohseni	DATE 3/23/12

Mohsen Mohseni
PROJECT ENGINEER

ALTERNATIVE A
PLANNING STUDY
STOCKDALE HWY UC

BRIDGE NO. 50-xxxx R/L	CU
SCALE: As Noted	EA 06-48460

USERNAME => p0004202 DATE PLOTTED => 3/27/2012 TIME PLOTTED => 2:15:14 PM

PREPARED FOR THE STATE OF CALIFORNIA - DEPARTMENT OF TRANSPORTATION

DIST.	COUNTY	ROUTE	POST MILES TOTAL PROJECT
06	KER	58	T31.7/R55.4

TRIP
900 Truxtun Ave, Suite 200
Bakersfield, CA 93301

PARSONS
2201 DUPONT DRIVE, SUITE 200
IRVINE, CA 92612

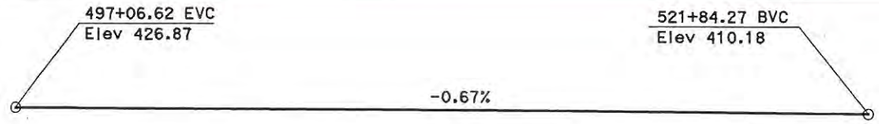

PROFILE GRADE
No Scale

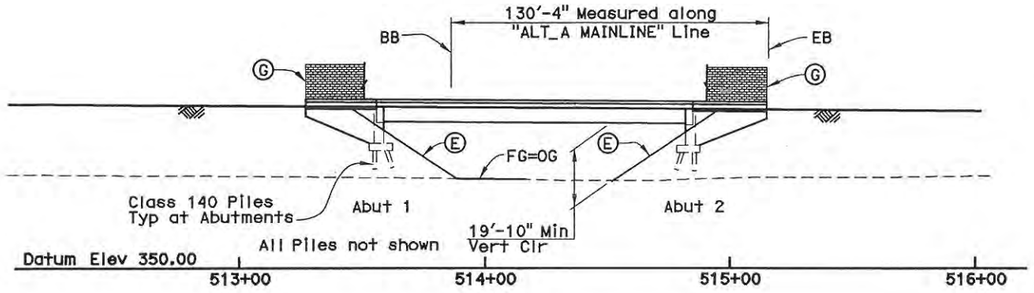

ELEVATION
1" = 30'

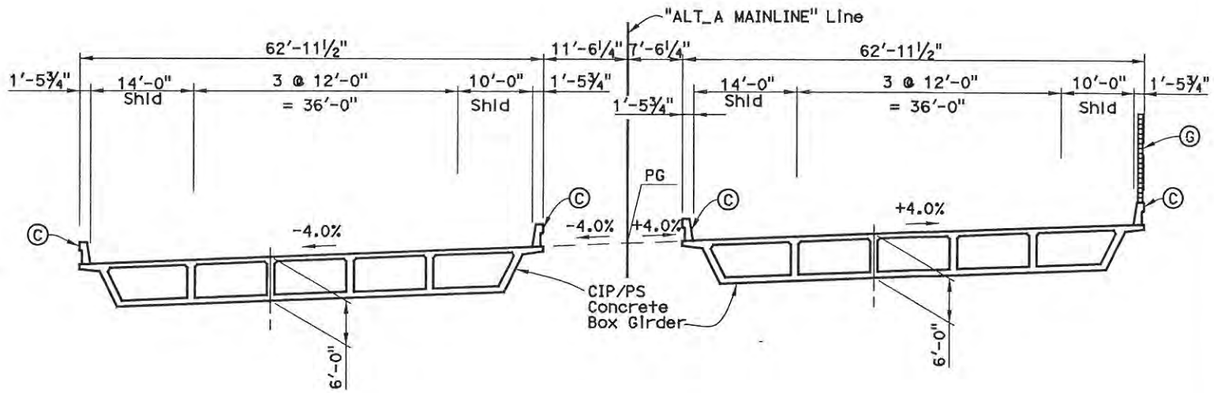

Note:

Traffic will pass through construction site.
15'-0" minimum vertical clearance required under falsework.

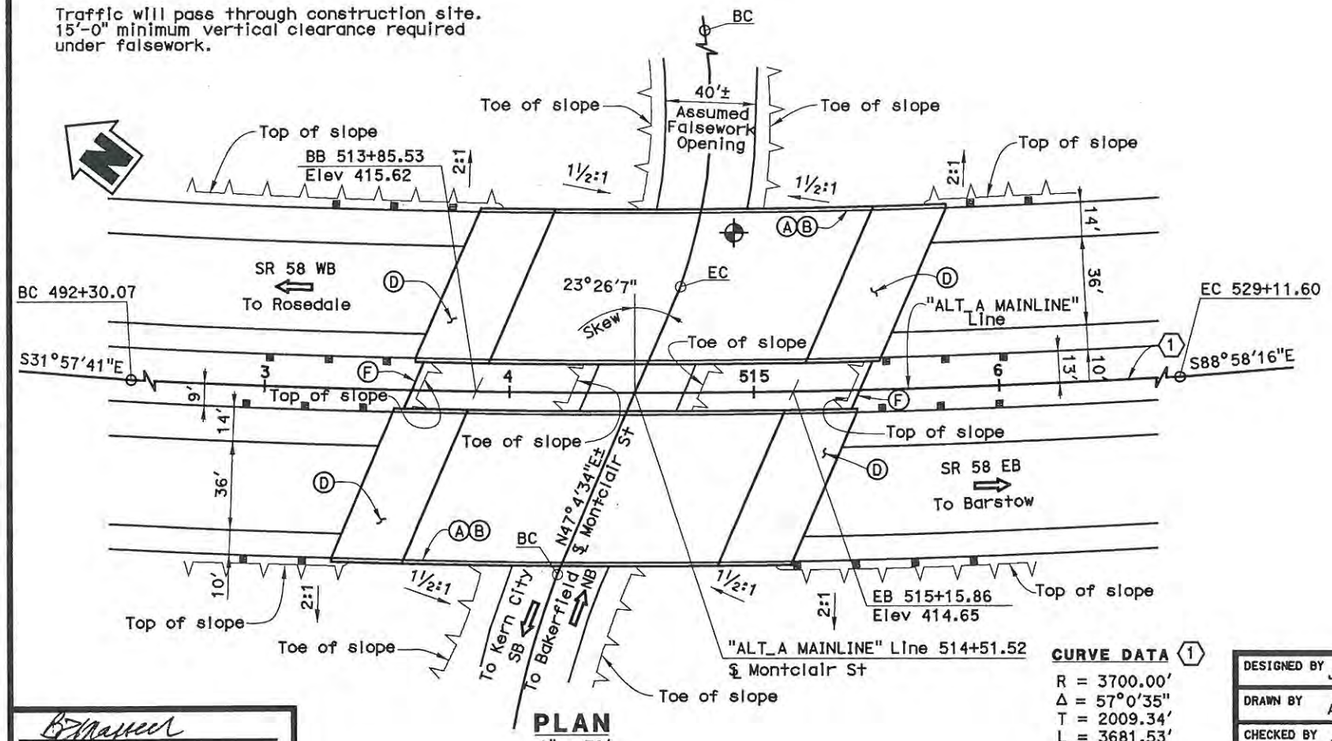

PLAN
1" = 30'

CURVE DATA (1)
R = 3700.00'
Δ = 57°0'35"
T = 2009.34'
L = 3681.53'

TYPICAL SECTION
1" = 10'

NOTES
- (A) Paint "Montclair St UC"
- (B) Paint "Br. No. 50-xxxx R/L"
- (C) Concrete Barrier Type 736
- (D) Structure Approach, Type N(30S)
- (E) Slope Paving - Full slope
- (F) Cable Railing
- (G) Soundwall, Height = 12'-0"

LEGEND
- ⇨ Indicates Direction of Traffic
- ⊕ Indicates Point of Minimum Vertical Clearance
- MBGR

DATE OF ESTIMATE	3-12-12
BRIDGE REMOVAL	= N/A
STRUCTURE DEPTH	= 6'-0"
LENGTH	= 130'-4"
WIDTH	= 62'-11½"
AREA	= 16,414 SF
COST/SF INCLUDING 10% MOBILIZATION & 25% CONTINGENCY	= $317/SF
TOTAL COST	= $5,200,000

DESIGN OVERSIGHT
6-22-12
SIGN OFF DATE

DESIGNED BY	J. Rudolph	DATE	3/12/12
DRAWN BY	A. Segura	DATE	3/12/12
CHECKED BY	A. Ly	DATE	3/14/12
APPROVED	M. Mohseni	DATE	3/19/12

Mohsen Mohseni
PROJECT ENGINEER

ALTERNATIVE A

PLANNING STUDY

MONTCLAIR STREET UC

BRIDGE NO. 50-xxxx R/L	CU
SCALE: As Noted	EA 06-48460

ADVANCE PLANNING STUDY SHEET (ENGLISH) (REV. 08-01-09)

FILE => $REQUEST

USERNAME => $USER DATE PLOTTED => $DATE TIME PLOTTED => $TIME

PREPARED FOR THE STATE OF CALIFORNIA - DEPARTMENT OF TRANSPORTATION

DIST.	COUNTY	ROUTE	POST MILES TOTAL PROJECT
06	KER	58	33.1/55.4

TRIP
900 Truxtun Ave, Suite 200
Bakersfield, CA 93301

PARSONS
2201 DUPONT DRIVE, SUITE 200
IRVINE, CA 92612

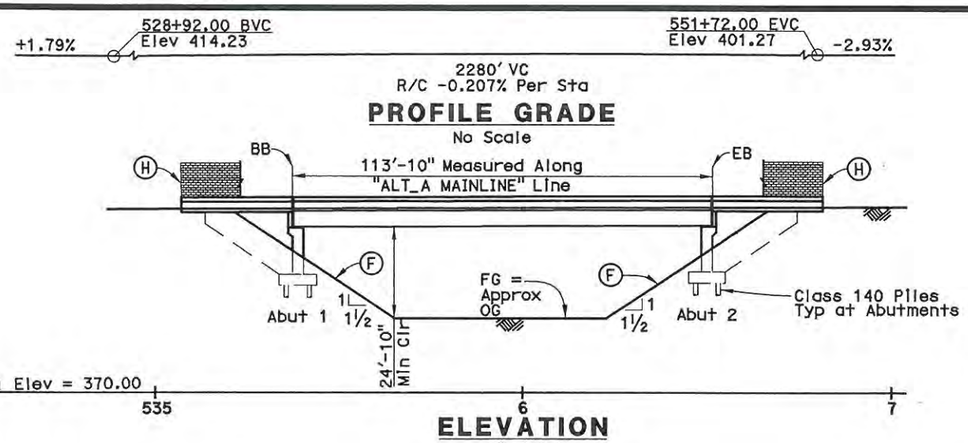

PROFILE GRADE
No Scale

ELEVATION
1" = 20'

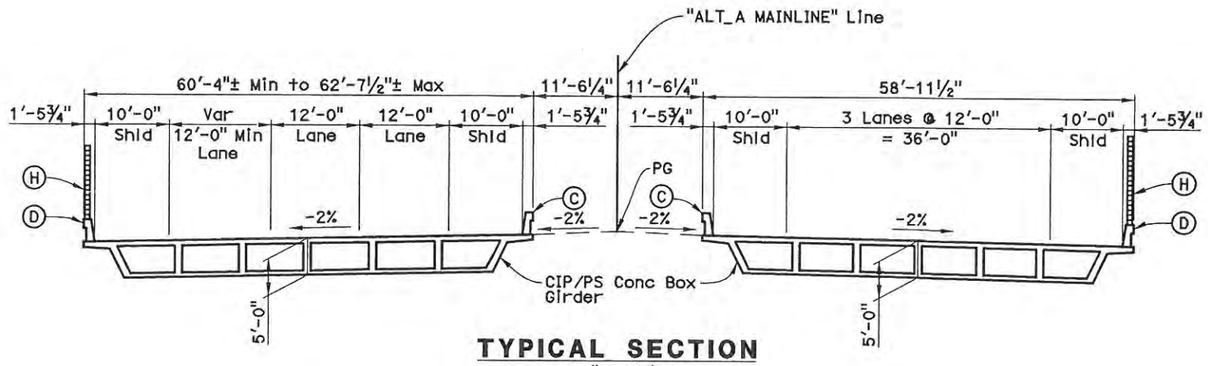

TYPICAL SECTION
1" = 10'

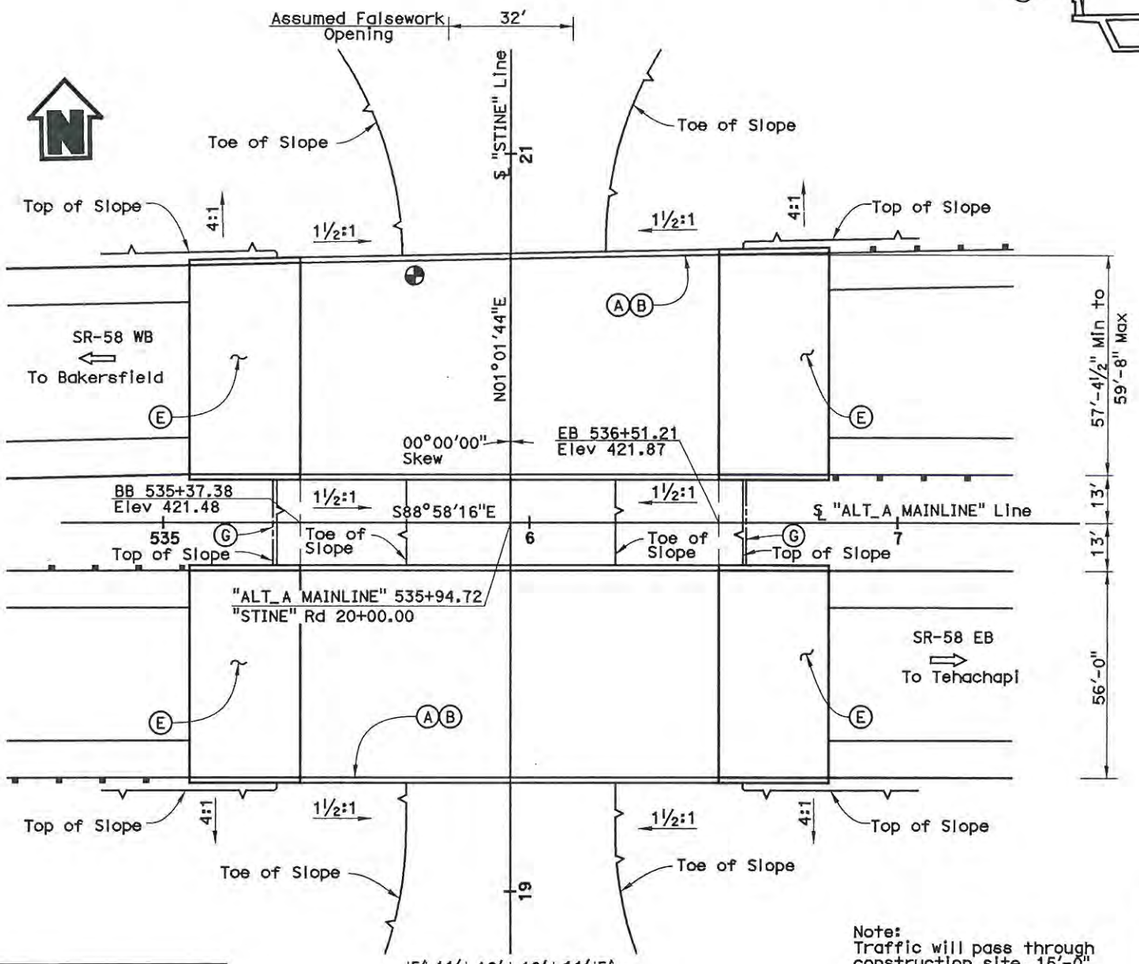

PLAN
1" = 20'

Note:
Traffic will pass through construction site, 15'-0" minimum vertical clearance required under falsework.

DATE OF ESTIMATE	= 3/26/12
STRUCTURE DEPTH	= 5'-0"
LENGTH	= 113'-10"
WIDTH	= 120'-5"
AREA	= 13,707 SF
COST/SF INCLUDING 10% MOBILIZATION & 25% CONTINGENCY	= $ 220
TOTAL COST	= $ 3,010,000

NOTES:

(A) Paint "Stine Road Undercrossing"
(B) Paint "Bridge No. 50-XXXXR/L"
(C) Concrete Barrier Type 736
(D) Concrete Barrier Type 736SV
(E) Structure Approach Type N(30S)
(F) Full Slope Paving
(G) Cable Railing
(H) Soundwall, Height = 10'-0" (Left)
Height = 12'-0" (Right)

LEGEND:

⇨ Indicates Direction of Traffic
⊕ Indicates Point of Mininmum Vertical Clearance
MBGR

ALTERNATIVE A

DESIGN OVERSIGHT
6-22-12
SIGN OFF DATE

DESIGNED BY	C. Parker	DATE	3/26/12
DRAWN BY	C. Parker	DATE	3/26/12
CHECKED BY	H. Mulla	DATE	4/2/12
APPROVED	H. Mulla	DATE	4/6/12

Mohsen Mohseni
PROJECT ENGINEER

PLANNING STUDY
STINE ROAD UC

BRIDGE NO. 50-XXXXR/L	CU
SCALE: As Noted	EA 06-48460

USERNAME => $USER DATE PLOTTED => $DATE TIME PLOTTED => $TIME

ADVANCE PLANNING STUDY SHEET (ENGLISH) (REV. 06-01-09)

FILE => $REQUEST

PREPARED FOR THE STATE OF CALIFORNIA - DEPARTMENT OF TRANSPORTATION

DIST.	COUNTY	ROUTE	POST MILES TOTAL PROJECT
06	KER	58	33.1/55.4

TRIP
900 Truxtun Ave, Suite 200
Bakersfield, CA 93301

PARSONS
2201 DUPONT DRIVE, SUITE 200
IRVINE, CA 92612

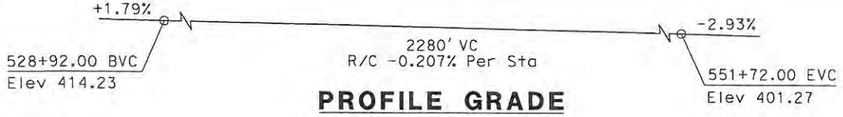

PROFILE GRADE
No Scale

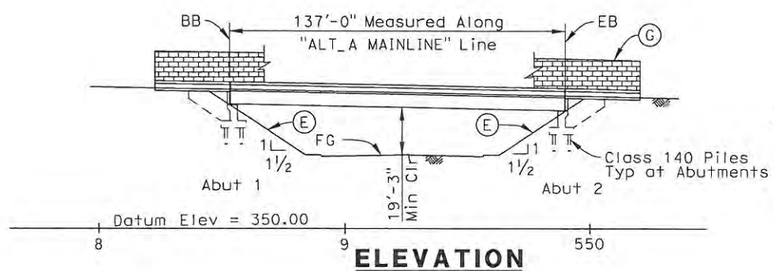

ELEVATION
1" = 30'

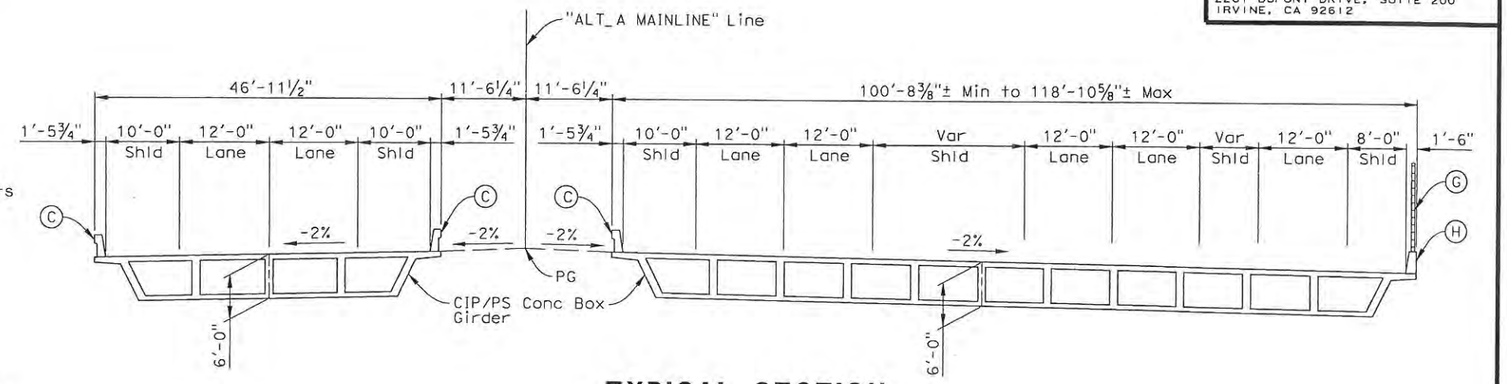

TYPICAL SECTION
1" = 10'

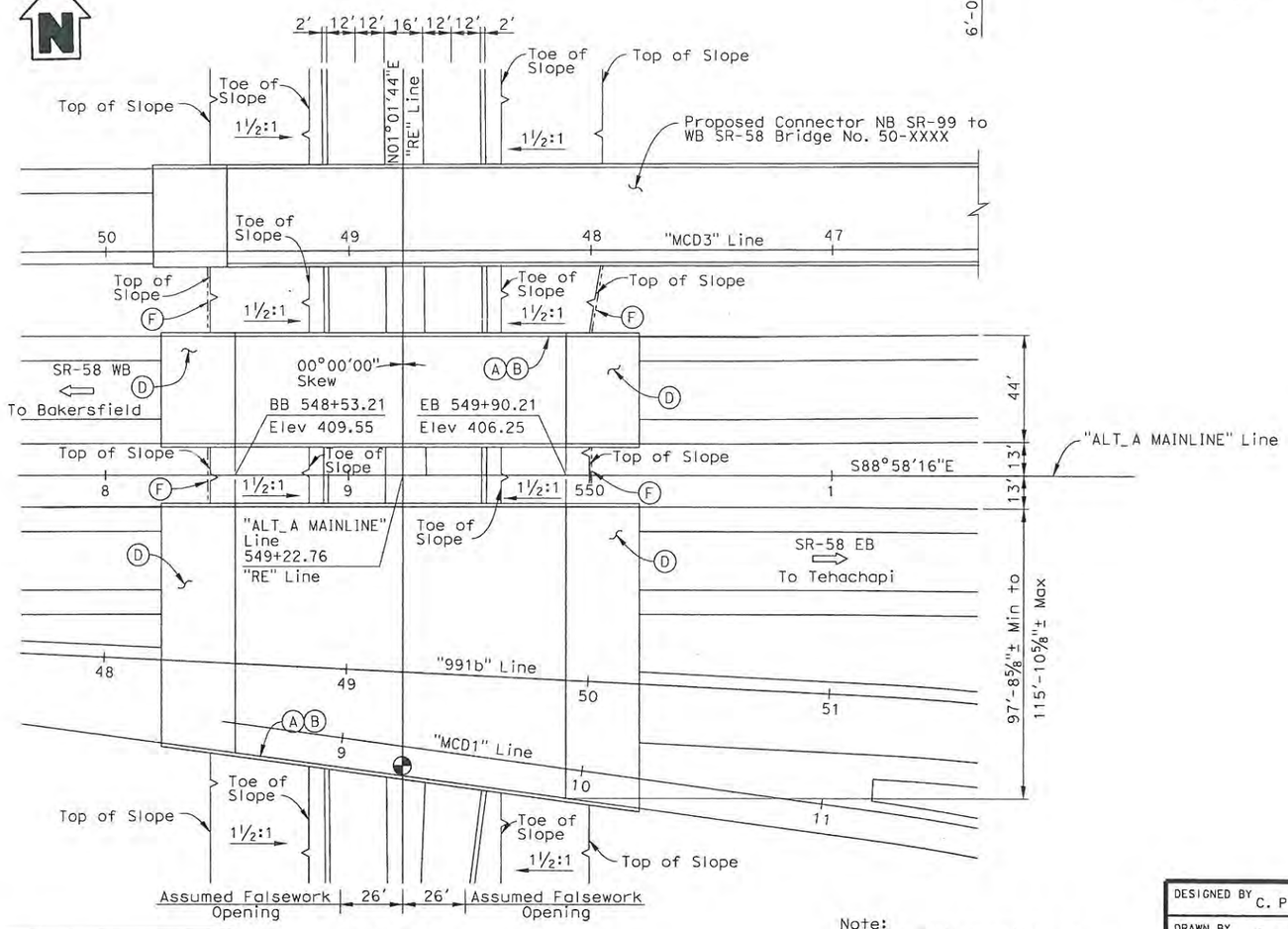

PLAN
1" = 30'

Note:
Traffic will pass through construction site, 15'-0" minimum vertical clearance required under falsework.

DATE OF ESTIMATE	= 04/06/12
STRUCTURE DEPTH	= 6'-0"
LENGTH	= 137'-0"
WIDTH	= 156'-9"
AREA	= 21,475 SF
COST/SF INCLUDING 10% MOBILIZATION & 25% CONTINGENCY	= $ 188
TOTAL COST	= $ 4,040,000

NOTES:

(A) Paint "S Real Road Undercrossing"
(B) Paint "Bridge No. 50-XXXXR/L"
(C) Concrete Barrier Type 736
(D) Structure Approach Type N(30S)
(E) Slope Paving
(F) Cable Railing
(G) Soundwall Height = 12'-0"
(H) Concrete Barrier Type 736S

LEGEND:

⇨ Indicates Direction of Traffic
⊕ Indicates Point of Mininmum Vertical Clearance

ALTERNATIVE A

DESIGN OVERSIGHT
SIGN OFF DATE 6-12-12

DESIGNED BY C. Parker	DATE 04/06/12	Mohsen Mohseni PROJECT ENGINEER	**PLANNING STUDY**
DRAWN BY S. Lee	DATE 04/06/12		**S. REAL ROAD UC**
CHECKED BY H. Mulia	DATE 04/06/12		BRIDGE NO. 50-XXXXR/L | CU
APPROVED H. Mulia	DATE 04/06/12		SCALE: As Noted | EA 06-48460

USERNAME => p0038090 DATE PLOTTED => 4/9/2012 TIME PLOTTED => 1:32:30 PM

PREPARED FOR THE STATE OF CALIFORNIA - DEPARTMENT OF TRANSPORTATION

DIST.	COUNTY	ROUTE	POST MILES TOTAL PROJECT
06	KER	58	T31.7/R55.4

TRIP
900 Truxtun Ave, Suite 200
Bakersfield, CA 93301

PARSONS
2201 DUPONT DRIVE, SUITE 200
IRVINE, CA 92612

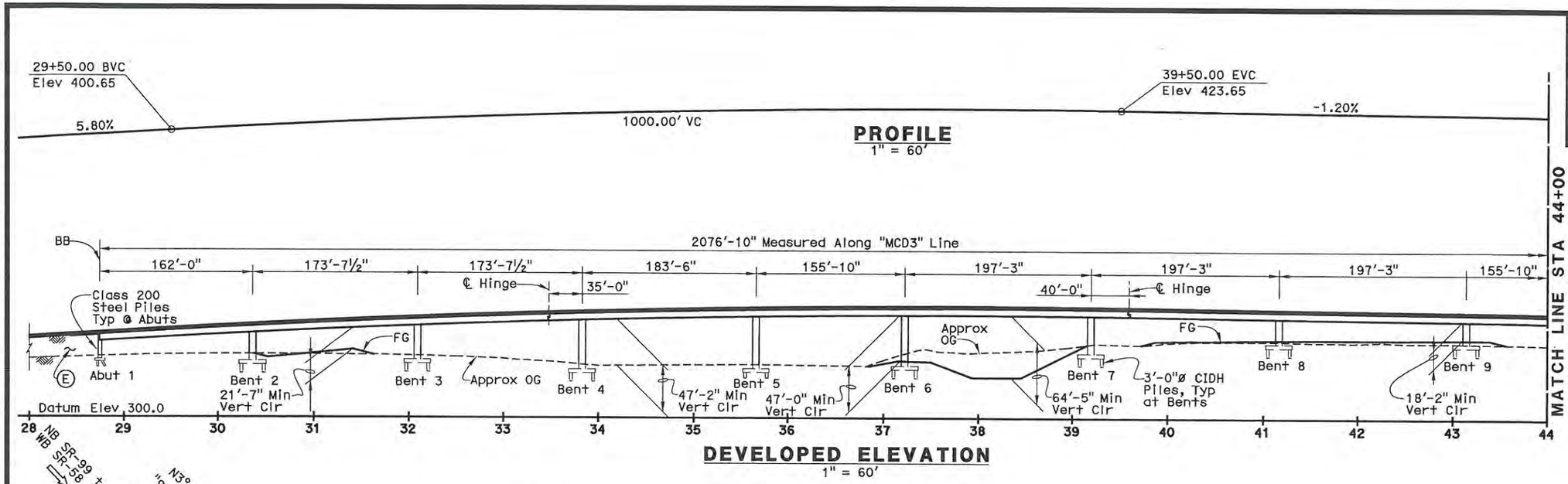

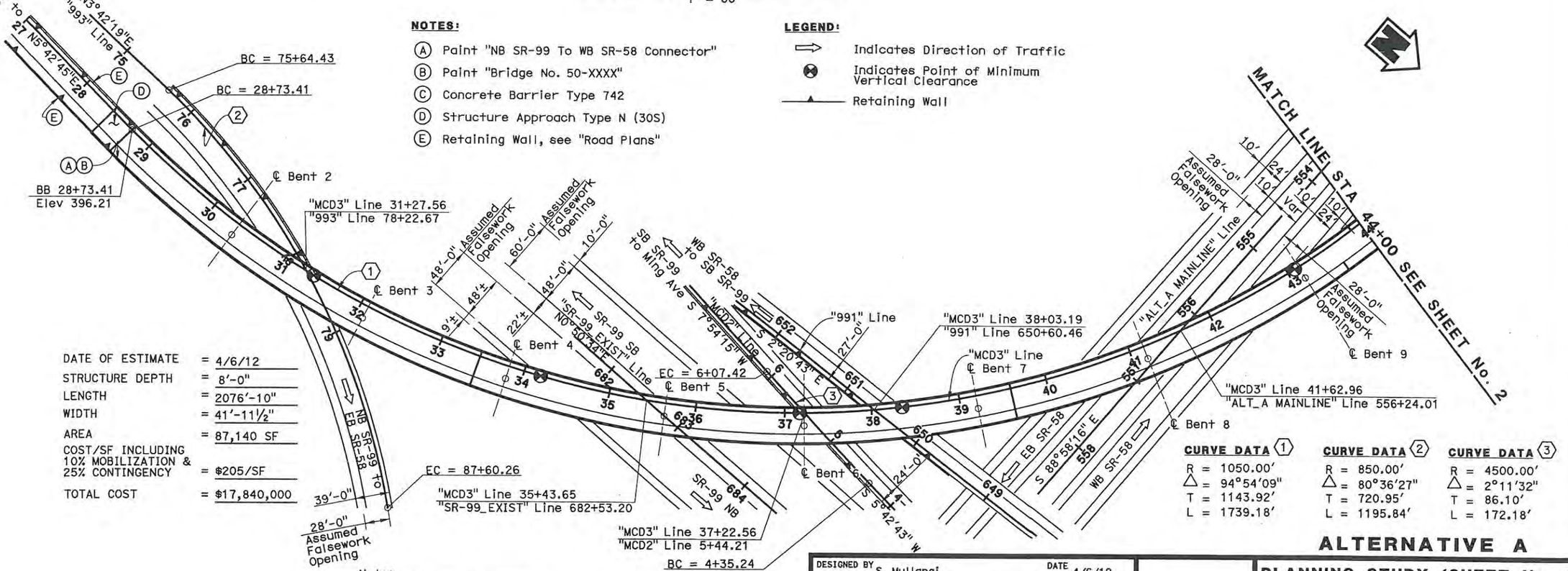

NOTES:

(A) Paint "NB SR-99 To WB SR-58 Connector"
(B) Paint "Bridge No. 50-XXXX"
(C) Concrete Barrier Type 742
(D) Structure Approach Type N (30S)
(E) Retaining Wall, see "Road Plans"

LEGEND:

Indicates Direction of Traffic
Indicates Point of Minimum Vertical Clearance
Retaining Wall

DATE OF ESTIMATE	= 4/6/12
STRUCTURE DEPTH	= 8'-0"
LENGTH	= 2076'-10"
WIDTH	= 41'-11½"
AREA	= 87,140 SF
COST/SF INCLUDING 10% MOBILIZATION & 25% CONTINGENCY	= $205/SF
TOTAL COST	= $17,840,000

Note:
Traffic will pass through construction site, 15'-0" minimum vertical clearance required under falsework.

PLAN
1" = 60'

CURVE DATA (1)
R = 1050.00'
Δ = 94°54'09"
T = 1143.92'
L = 1739.18'

CURVE DATA (2)
R = 850.00'
Δ = 80°36'27"
T = 720.95'
L = 1195.84'

CURVE DATA (3)
R = 4500.00'
Δ = 2°11'32"
T = 86.10'
L = 172.18'

ALTERNATIVE A

DESIGN OVERSIGHT
SIGN OFF DATE

ADVANCE PLANNING STUDY SHEET (ENGLISH) (REV. 06-01-09)

DESIGNED BY	S. Mullangi	DATE	4/6/12
DRAWN BY	P. Johnson	DATE	4/6/12
CHECKED BY	M. Mohseni	DATE	4/6/12
APPROVED	M. Mohseni	DATE	4/6/12

Mohsen Mohseni
PROJECT ENGINEER

PLANNING STUDY (SHEET No. 1)
NB SR-99 TO WB SR-58 CONNECTOR

BRIDGE NO. 50-XXXX	CU
SCALE: As Noted	EA 06-48460

USERNAME => p0024020 DATE PLOTTED => 4/6/2012 TIME PLOTTED => 10:53:02 AM

FILE => c:\pw_working\ptgpwlseb\p0024020\dms93385\ex-a-gp01alt01.dgn

PREPARED FOR THE STATE OF CALIFORNIA - DEPARTMENT OF TRANSPORTATION

DIST.	COUNTY	ROUTE	POST MILES TOTAL PROJECT
06	KER	58	T31.7/R55.4

TRIP
900 Truxtun Ave, Suite 200
Bakersfield, CA 93301

PARSONS
2201 DUPONT DRIVE, SUITE 200
IRVINE, CA 92612

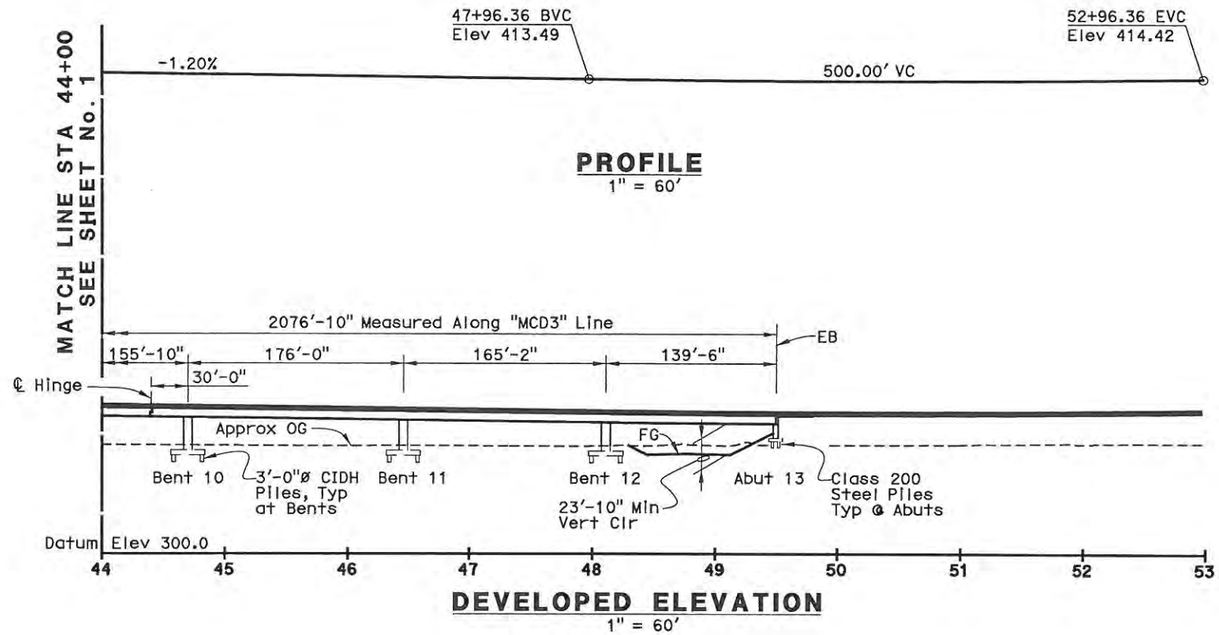

DATE OF ESTIMATE	=	4/6/12
STRUCTURE DEPTH	=	8'-0"
LENGTH	=	2076'-10"
WIDTH	=	41'-11½"
AREA	=	87,140 SF
COST/SF INCLUDING 10% MOBILIZATION & 25% CONTINGENCY	=	$205/SF
TOTAL COST	=	$17,840,000

NOTES:

Ⓐ Paint "NB SR-99 To WB SR-58 Connector"
Ⓑ Paint "Bridge No. 50-XXXX"
Ⓒ Concrete Barrier Type 742
Ⓓ Structure Approach Type N (30S)
Ⓔ Retaining Wall, see "Road Plans"

LEGEND:

⇨ Indicates Direction of Traffic
⊕ Indicates Point of Minimum Vertical Clearance
—▲— Retaining Wall

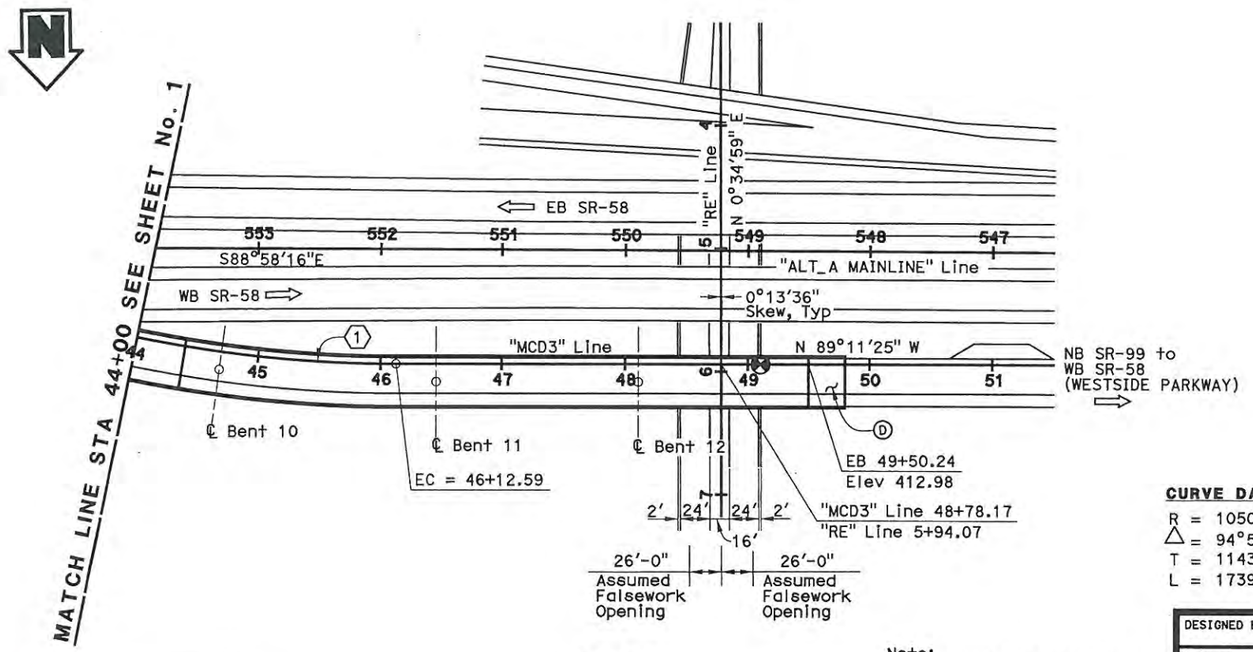

Note:
Traffic will pass through construction site, 15'-0" minimum vertical clearance required under falsework.

CURVE DATA ①
R = 1050.00'
△ = 94°54'09"
T = 1143.92'
L = 1739.18'

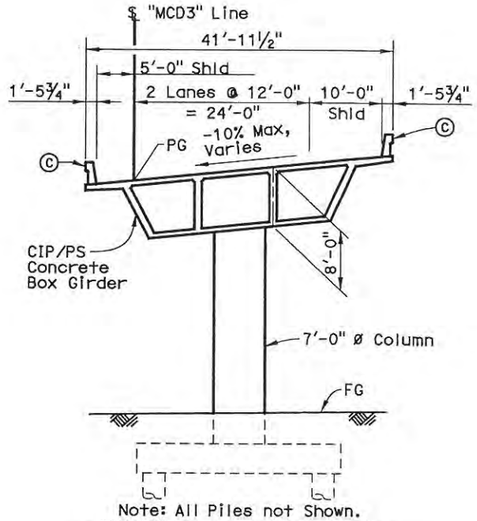

TYPICAL SECTION

ALTERNATIVE A

DESIGNED BY S. Mullangi	DATE 4/6/12	Mohsen Mohseni PROJECT ENGINEER	PLANNING STUDY (SHEET No. 2)
DRAWN BY P. Johnson	DATE 4/6/12		NB SR-99 TO WB SR-58 CONNECTOR
CHECKED BY M. Mohseni	DATE 4/6/12		BRIDGE NO. 50-XXXX / CU
APPROVED M. Mohseni	DATE 4/6/12		SCALE: As Noted / EA 06-48460

DESIGN OVERSIGHT
SIGN OFF DATE 6-22-12

ADVANCE PLANNING STUDY SHEET (ENGLISH) (REV. 06-01-09)

FILE => c:\pw_working\ptgpwlseb\p0024020\dms93385\ex-a-gp01alt+A02.dgn

USERNAME => p0024020 DATE PLOTTED => 4/6/2012 TIME PLOTTED => 11:06:31 AM

PREPARED FOR THE STATE OF CALIFORNIA - DEPARTMENT OF TRANSPORTATION

DIST.	COUNTY	ROUTE	POST MILES TOTAL PROJECT
06	KER		T31.7/R55.6

TRIP
900 Truxtun Ave, Suite 200
Bakersfield, CA 93301

PARSONS
2201 DUPONT DRIVE, SUITE 200
IRVINE, CA 92612

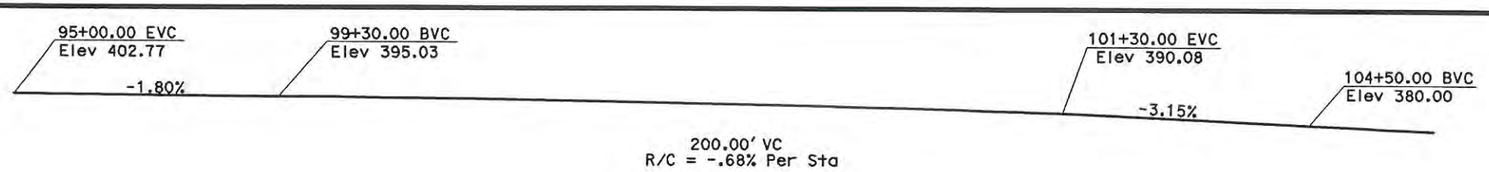

PROFILE GRADE
No Scale

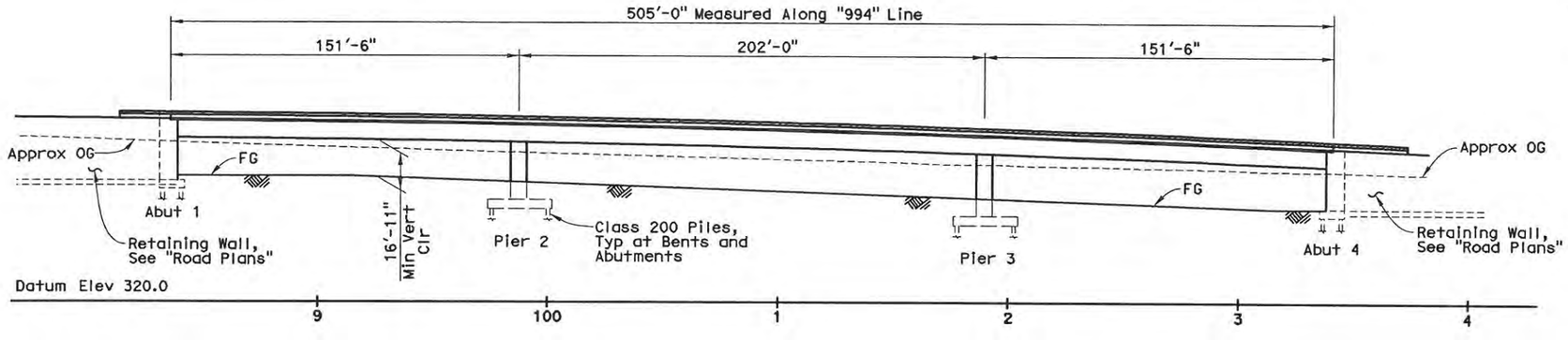

ELEVATION
1" = 30'

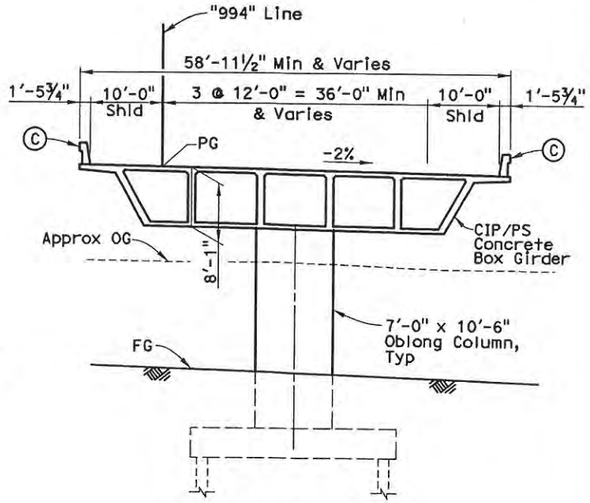

Note: All Piles not Shown.

TYPICAL SECTION
1" = 10'

Note:

Vehicular traffic will not pass through construction. Falsework will not be required.

NOTES

Ⓐ Paint "SR99 To EB58 Connector Separation"
Ⓑ Paint "Br. No. 50-xxxx"
Ⓒ Concrete Barrier Type 736
Ⓓ Structure Approach, Type N(30S)

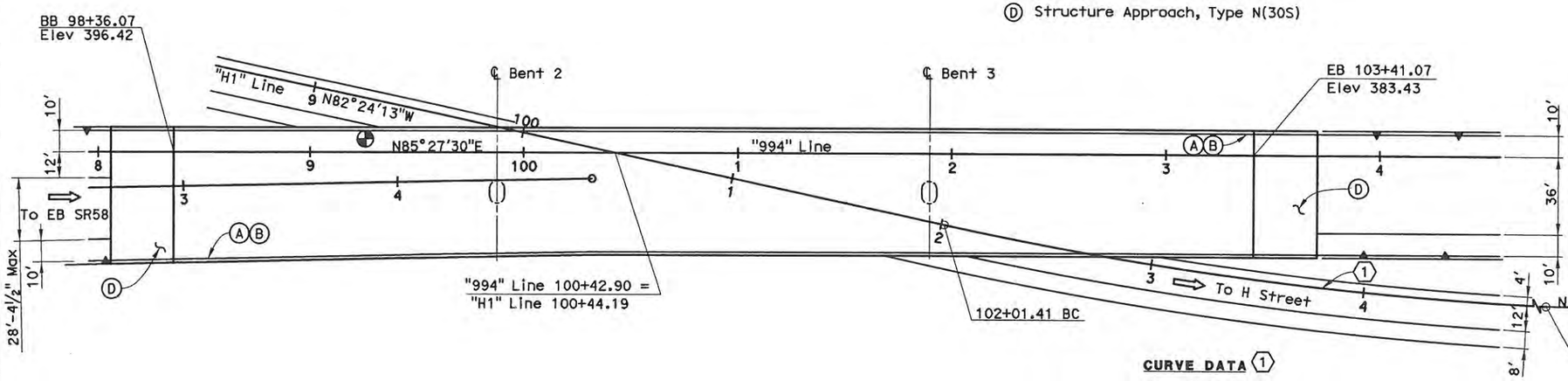

CURVE DATA (1)
R = 1700.00
△ = 11°18'36"
T = 168.33'
L = 335.57'

PLAN
1" = 30'

LEGEND

⇨ Indicates Direction of Traffic
⊕ Indicates Point of Minimum Vertical Clearance
▲— Retaining Wall

DATE OF ESTIMATE	2-8-12
STRUCTURE DEPTH	= 8'-1"
LENGTH	= 505'-0"
WIDTH	= 58'-11½" & Var
AREA	= 28,736 SF
COST/SF INCLUDING 10% MOBILIZATION & 25% CONTINGENCY	= $198/SF
TOTAL COST	= $5,700,000

ALTERNATIVE A

PLANNING STUDY

SR99 TO EB58 CONNECTOR SEPARATION

DESIGNED BY	J. Fix	DATE	2/7/12
DRAWN BY	J. Gilmore	DATE	2/7/12
CHECKED BY	M. Mohseni	DATE	2/8/12
APPROVED	M. Mohseni	DATE	2/8/12

Mohsen Mohseni
PROJECT ENGINEER

BRIDGE NO. 50-xxxx	CU
SCALE: As Noted	EA 06-48460

DESIGN OVERSIGHT
SIGN OFF DATE 6-22-12

ADVANCE PLANNING STUDY SHEET (ENGLISH) (REV. 06-01-09)

FILE => H:\646593_CENTENNIAL\SHT\STRUCTURES\APS\Sr99_EB58 Conn Sep H St\Rev Alt A\55-xxx-a-gp01.dgn

DATE PLOTTED => 4/5/2012 TIME PLOTTED => 11:42:45 PM
USERNAME => 36671

PREPARED FOR THE STATE OF CALIFORNIA - DEPARTMENT OF TRANSPORTATION

DIST.	COUNTY	ROUTE	POST MILES TOTAL PROJECT
06	KER	58	33.1/55.4

TRIP
900 Truxtun Ave, Suite 200
Bakersfield, CA 93301

PARSONS
2201 DUPONT DRIVE, SUITE 200
IRVINE, CA 92612

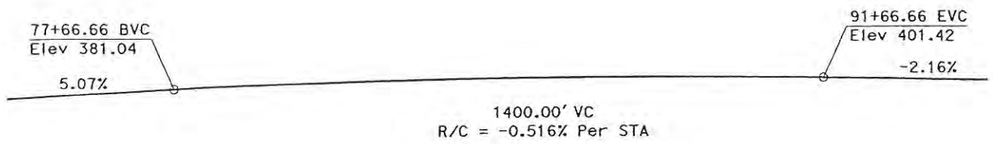

PROFILE GRADE
No Scale

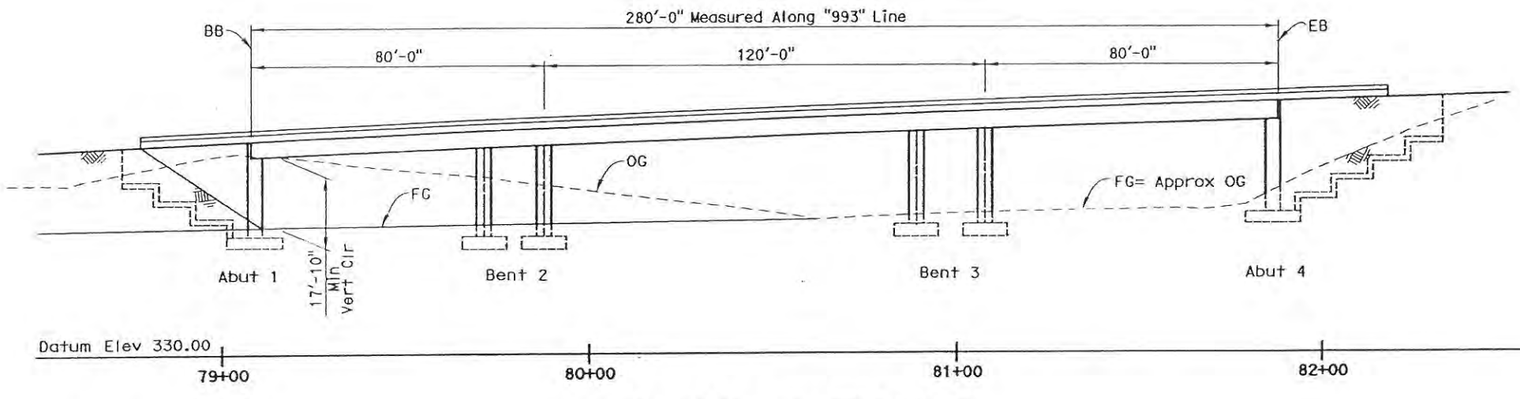

DEVELOPED ELEVATION
1" = 20'

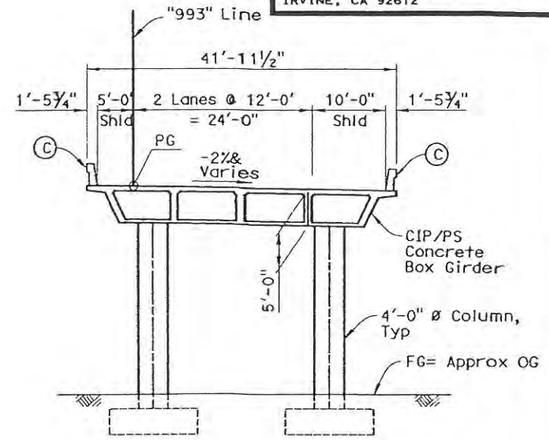

TYPICAL SECTION
1" = 10'

NOTE
Traffic will pass through construction site, 15'-0" mininum vertical clearance required under falsework.

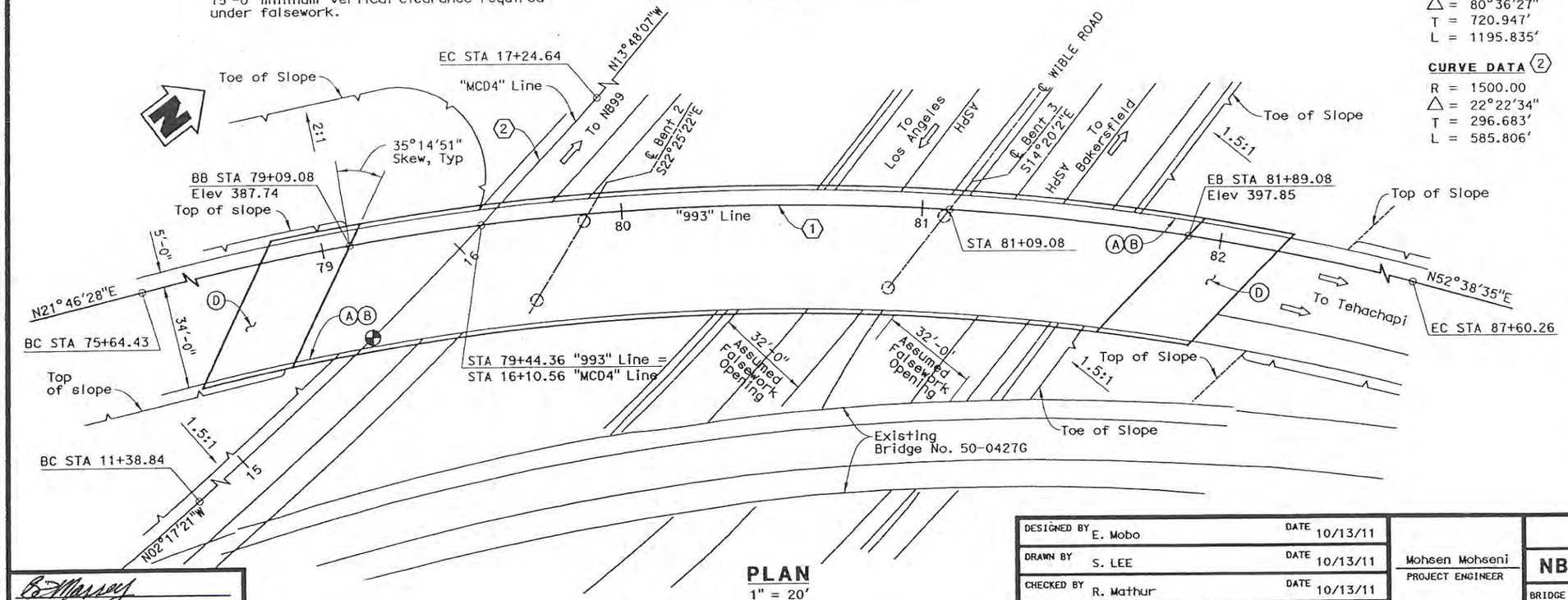

PLAN
1" = 20'

CURVE DATA (1)
R = 850.00
△ = 80°36'27"
T = 720.947'
L = 1195.835'

CURVE DATA (2)
R = 1500.00
△ = 22°22'34"
T = 296.683'
L = 585.806'

DATE OF ESTIMATE	=	10/26/11
BRIDGE REMOVAL	=	N/A
STRUCTURE DEPTH	=	5'-0"
LENGTH	=	280'-0"
WIDTH	=	41'-11½"
AREA	=	11,749 SF
COST/SF INCLUDING 10% MOBILIZATION & 25% CONTINGENCY	=	$155/SF
TOTAL COST	=	$1,820,000

NOTES:
(A) Paint "NB99-EB58 (WIBLE ROAD) UC"
(B) Paint "Bridge No. 50-XXXX"
(C) Concrete Barrier Type 736
(D) Structure Approach Type N(30S)

LEGEND:
⇨ Indicates Direction of Traffic
Indicates Point of Minimum Vertical Clearance
Indicates MSE Wall
Indicates Existing Structure

ALTERNATIVE A

DESIGNED BY E. Mobo	DATE 10/13/11	Mohsen Mohseni, PROJECT ENGINEER	PLANNING STUDY
DRAWN BY S. LEE	DATE 10/13/11		NB99-EB58 (WIBLE ROAD) UC
CHECKED BY R. Mathur	DATE 10/13/11		BRIDGE NO. 50-XXXX / CU
APPROVED M.Mohseni	DATE 10/13/11		SCALE: As Noted / EA 06-48460

DESIGN OVERSIGHT
6-22-12
SIGN OFF DATE

FILE => $REQUEST
DATE PLOTTED => $DATE
TIME PLOTTED => $TIME
USERNAME => $USER

PREPARED FOR THE STATE OF CALIFORNIA - DEPARTMENT OF TRANSPORTATION

DIST.	COUNTY	ROUTE	POST MILES TOTAL PROJECT
06	KER	58	33.1/55.4

TRIP
900 Truxtun Ave, Suite 200
Bakersfield, CA 93301

PARSONS
2201 DUPONT DRIVE, SUITE 200
IRVINE, CA 92612

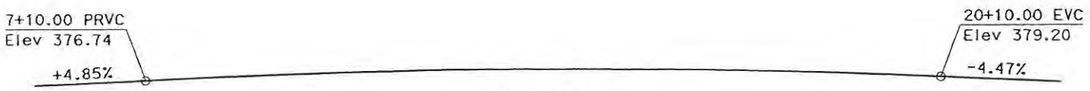

PROFILE GRADE
No Scale

NOTES:

(A) Paint "MING AVE OFF-RAMP CONNECTOR SEPARATION"
(B) Paint "Bridge No. 50-xxxx"
(C) Concrete Barrier Type 736
(D) Structure Approach, Type N(30S)

LEGEND:

⇨ Indicates Direction of Traffic
Indicates Point of Minimum Vertical Clearance
Indicates MSE Wall

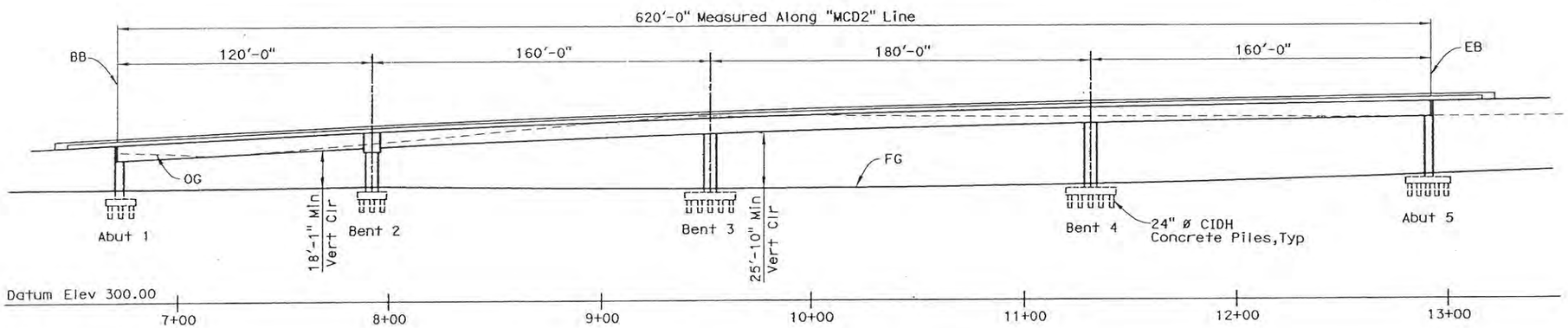

DEVELOPED ELEVATION
1" = 30'

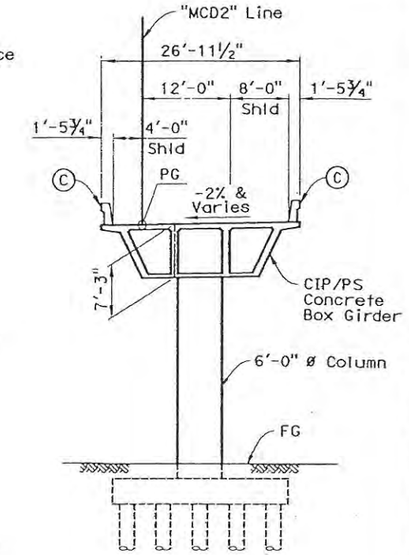

TYPICAL SECTION
1" = 10'

NOTES

Traffic will not pass through construction. No falsework opening required.

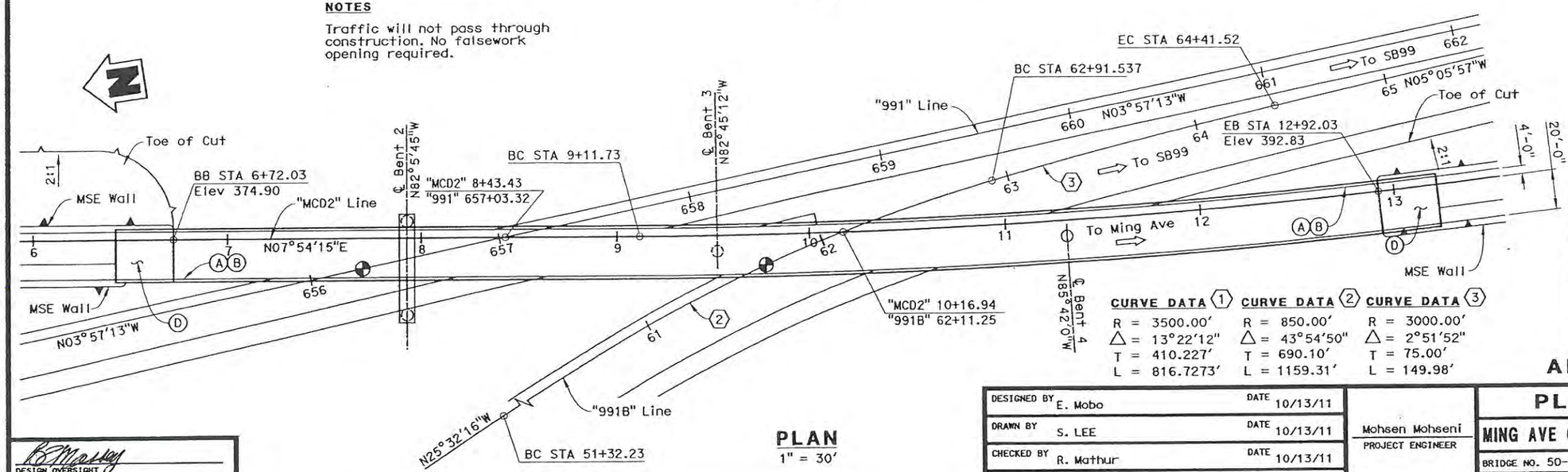

PLAN
1" = 30'

CURVE DATA (1)	CURVE DATA (2)	CURVE DATA (3)
R = 3500.00'	R = 850.00'	R = 3000.00'
△ = 13°22'12"	△ = 43°54'50"	△ = 2°51'52"
T = 410.227'	T = 690.10'	T = 75.00'
L = 816.7273'	L = 1159.31'	L = 149.98'

DATE OF ESTIMATE	=	10/26/11
STRUCTURE DEPTH	=	7'-3"
LENGTH	=	620'-0"
WIDTH	=	26'-11½"
AREA	=	16,714 SF
COST/SF INCLUDING 10% MOBILIZATION & 25% CONTINGENCY	=	$238/SF
TOTAL COST	=	$3,970,000

ALTERNATIVE A

DESIGNED BY	E. Mobo	DATE	10/13/11
DRAWN BY	S. LEE	DATE	10/13/11
CHECKED BY	R. Mathur	DATE	10/13/11
APPROVED	M.Mohseni	DATE	10/13/11

Mohsen Mohseni
PROJECT ENGINEER

DESIGN OVERSIGHT
6-22-12
SION OFF DATE

PLANNING STUDY

MING AVE OFF-RAMP CONNECTOR SEPARATION

BRIDGE NO. 50-XXXX	CU
SCALE: As Noted	EA 06-48460

TIME PLOTTED => $TIME
DATE PLOTTED => $DATE
USERNAME => $USER
FILE => $REQUEST

PREPARED FOR THE STATE OF CALIFORNIA - DEPARTMENT OF TRANSPORTATION

DIST.	COUNTY	ROUTE	POST MILES TOTAL PROJECT
06	KER	58	T31.7/R55.4

TRIP
900 Truxtun Ave, Suite 200
Bakersfield, CA 93301

PARSONS 2201 DUPONT DRIVE SUITE 200 IRVINE, CA 92612

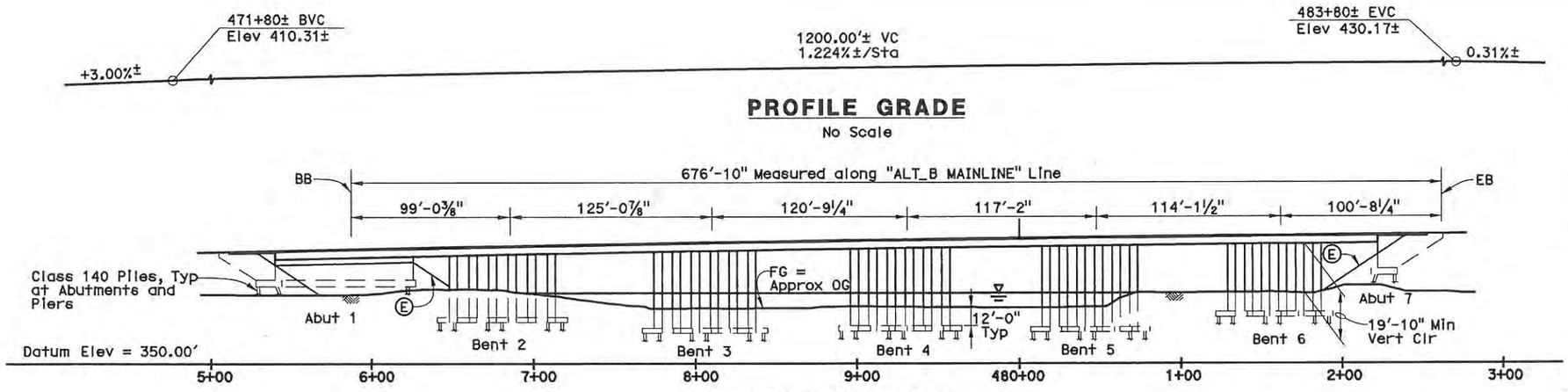

Note: All piles not shown

PROFILE GRADE
No Scale

ELEVATION
1" = 40'

NOTES:

Ⓐ Paint "Kern River Bridge"
Ⓑ Paint "Bridge No. 50-0375S"
Ⓒ Concrete Barrier Type 732
Ⓓ Structure Approach, Type N(30S)
Ⓔ Slope Paving - Full Slope
Ⓕ Concrete Barrier Type 60A
Ⓖ Temporary Railing Type K

LEGEND

- Indicates Direction of Traffic
- Indicates Point of Minimum Vertical Clearance
- Bridge Removal
- Closure Pour
- Indicates Direction of Flow
- Water Surface Elevation (WSE) at Bridge for 100 year design flood = 393.64 average mean sea level

DATE OF ESTIMATE	01-20-12
BRIDGE REMOVAL	= 2,330 SF
STRUCTURE DEPTH	= 5'-3"
LENGTH	= 676'-10"
WIDTH	= 129'-0"
AREA	= 96,076 SF
COST/SF INCLUDING 10% MOBILIZATION & 25% CONTINGENCY	= $211/SF
TOTAL COST	= $20,270,000

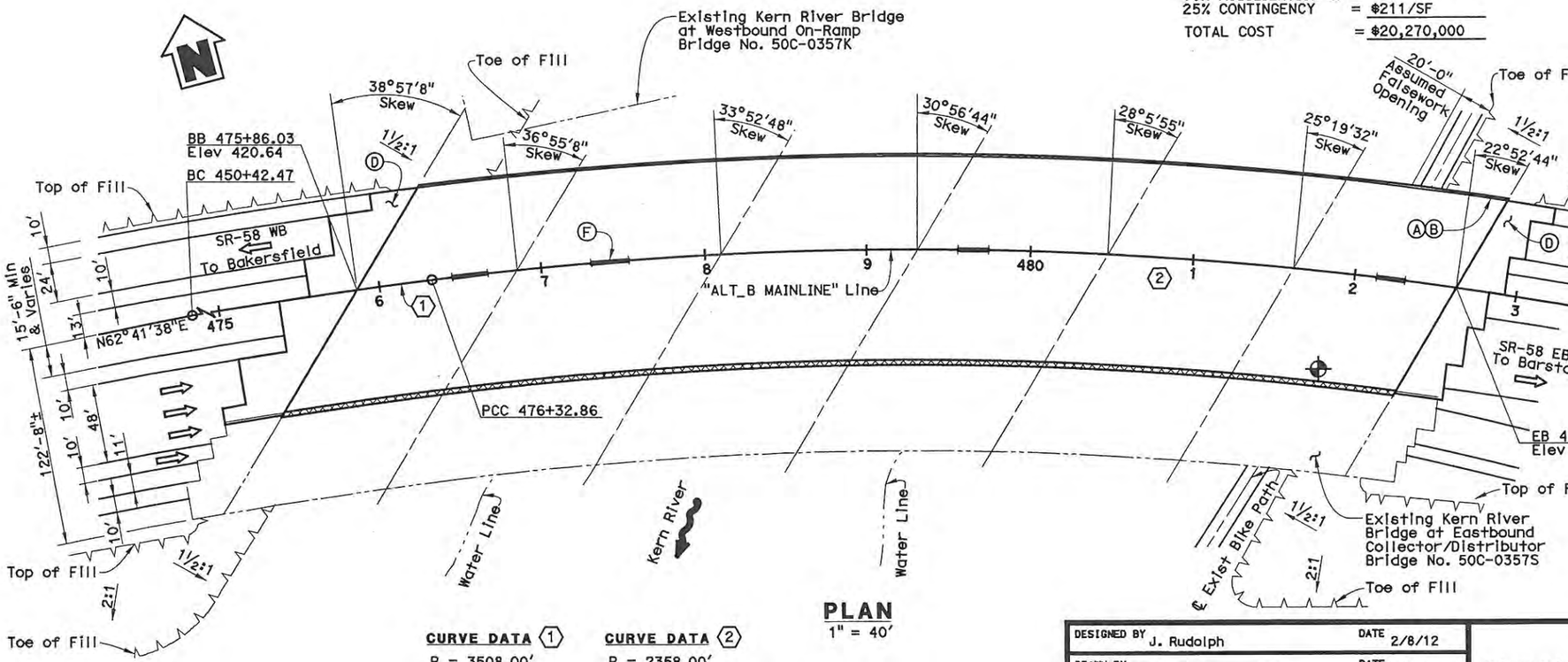

PLAN
1" = 40'

CURVE DATA ① R = 3508.00' Δ = 42°18'31" T = 1357.45' L = 2590.39'

CURVE DATA ② R = 2358.00' Δ = 46°30'17" T = 1013.19' L = 1913.88'

NOTES:

1. Traffic will pass through construction site.
2. Falsework opening required for bike path.

ALTERNATIVE B

B. Massey
DESIGN OVERSIGHT
6-22-12
SIGN OFF DATE

DESIGNED BY J. Rudolph	DATE 2/8/12	Mohsen Mohseni, PROJECT ENGINEER
DRAWN BY P. Johnson	DATE 2/8/12	
CHECKED BY M. Mohseni	DATE 2/8/12	
APPROVED M. Mohseni	DATE 2/12/12	

PLANNING STUDY No. 1
KERN RIVER BRIDGE (WIDEN)

BRIDGE NO. 50C-0357S	CU
SCALE: As Noted	EA

USERNAME => $USER DATE PLOTTED => $DATE TIME PLOTTED => $TIME

FILE => $REQUEST

PREPARED FOR THE STATE OF CALIFORNIA - DEPARTMENT OF TRANSPORTATION

DIST.	COUNTY	ROUTE	POST MILES TOTAL PROJECT
06	KER	58	T31.7/R55.4

TRIP
900 Truxtun Ave, Suite 200
Bakersfield, CA 93301

PARSONS 2201 DUPONT DRIVE SUITE 200 IRVINE, CA 92612

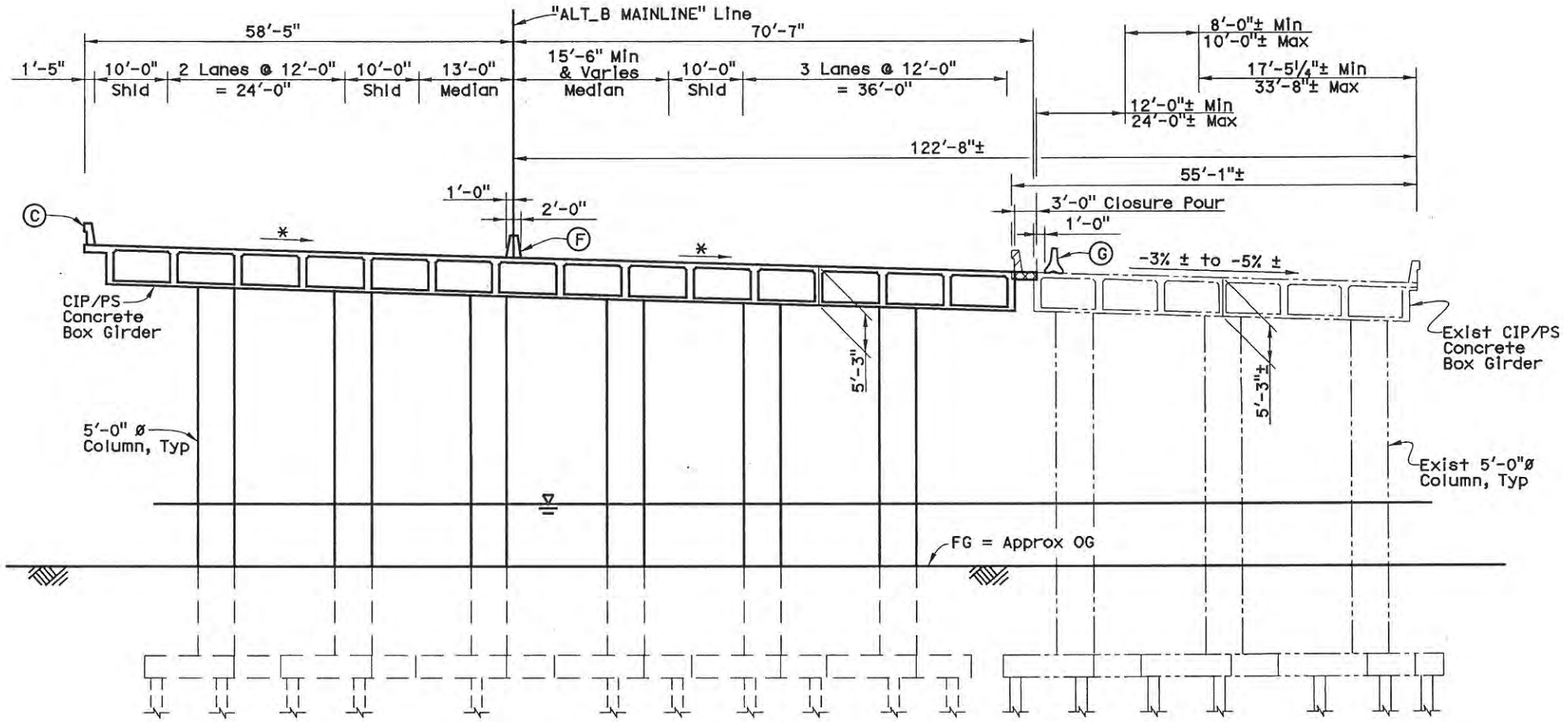

* Match Existing Cross Slope
Note: All Piles not Shown.

TYPICAL SECTION
1" = 10'

NOTES:

1. For Notes, see "Planning Study No. 1" sheet.

ALTERNATIVE B

DESIGNED BY J. Rudolph	DATE 2/8/12	Mohsen Mohseni PROJECT ENGINEER	PLANNING STUDY No. 2
DRAWN BY P. Johnson	DATE 2/8/12		KERN RIVER BRIDGE (WIDEN)
CHECKED BY M. Mohseni	DATE 2/8/12		BRIDGE NO. 50C-0357S / CU
APPROVED M. Mohseni	DATE 2/12/12		SCALE: As Noted / EA

DESIGN OVERSIGHT
6-27-12
SIGN OFF DATE

USERNAME => $USER DATE PLOTTED => $DATE TIME PLOTTED => $TIME

FILE => $REQUEST

PREPARED FOR THE STATE OF CALIFORNIA - DEPARTMENT OF TRANSPORTATION

DIST.	COUNTY	ROUTE	POST MILES TOTAL PROJECT
06	KER	58	T31.7/R55.4

TRIP
900 Truxtun Ave, Suite 200
Bakersfield, CA 93301

PARSONS
2201 DUPONT DRIVE, SUITE 200
IRVINE, CA 92612

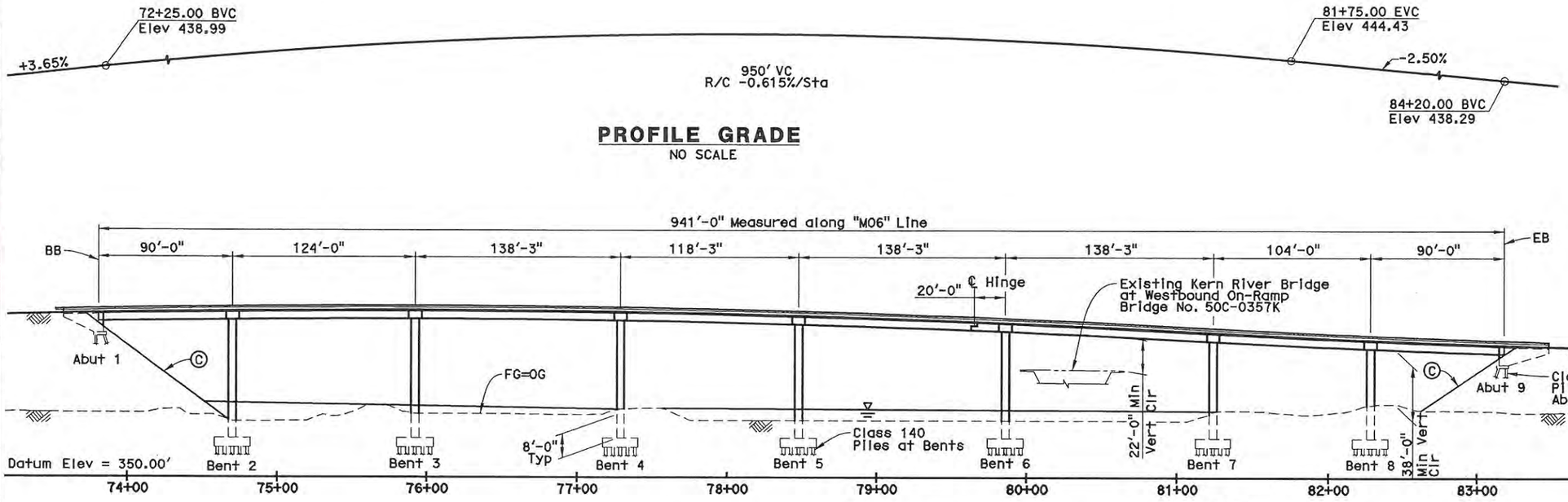

PROFILE GRADE
NO SCALE

ELEVATION
1" = 40'

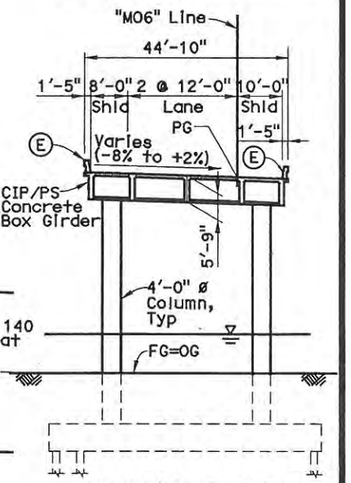

Note: All Piles not Shown.

TYPICAL SECTION
¾" = 1'-0"

NOTES:
- Ⓐ Paint "WB SR58 OFF-RAMP"
- Ⓑ Paint "Bridge No. 50-xxxx"
- Ⓒ Slope Paving - Full Slope
- Ⓓ Structure Approach, Type N(30S)
- Ⓔ Concrete Barrier Type 742

LEGEND
- Indicates Existing Bridge
- Indicates Direction of Traffic
- Indicates Point of Minimum Vertical Clearance
- Indicates Direction of Flow
- Water Surface Elevation (WSE) at Bridge for 100 year design flood = 394.03 average mean sea level

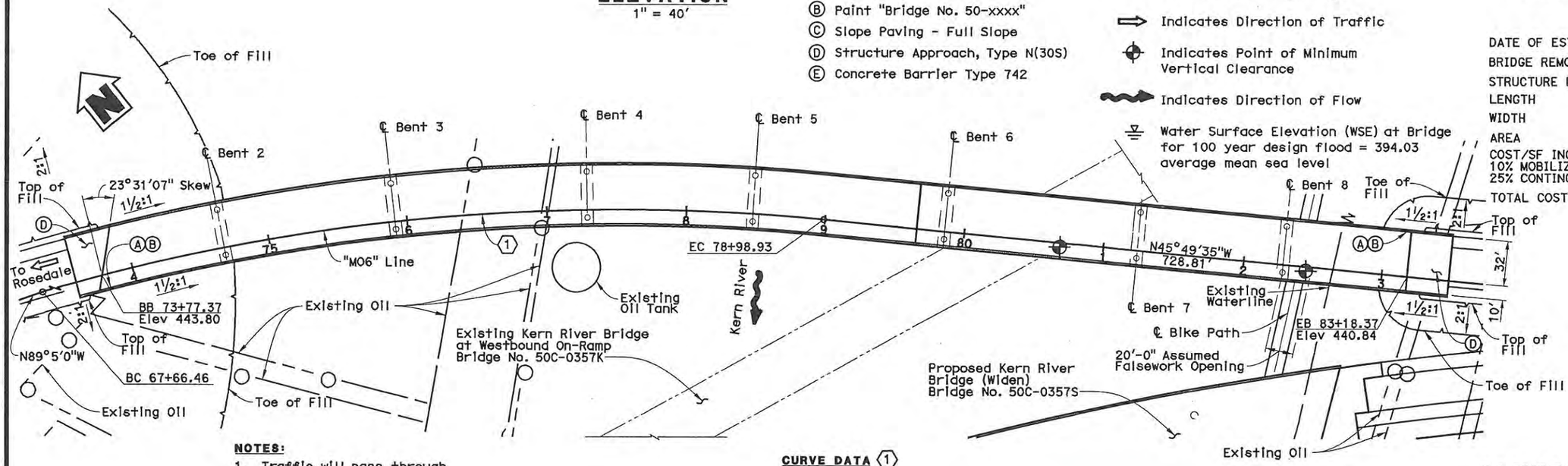

NOTES:
1. Traffic will pass through construction site.
2. Falsework opening required for bike path.

CURVE DATA ①
R = 1500.00'
Δ = 43°15'25"
T = 594.75'
L = 1132.47'

PLAN
1" = 40'

DATE OF ESTIMATE	3-7-12
BRIDGE REMOVAL	= N/A
STRUCTURE DEPTH	= 5'-9"
LENGTH	= 941'-0"
WIDTH	= 44'-10"
AREA	= 42,227 SF
COST/SF INCLUDING 10% MOBILIZATION & 25% CONTINGENCY	= $ 268/SF
TOTAL COST	= $ 11,300,000

ALTERNATIVE B

DESIGN OVERSIGHT
6-22-12
SIGN OFF DATE

DESIGNED BY J. Rudolph	DATE 3/7/12	Mohsen Mohseni, PROJECT ENGINEER
DRAWN BY J. Gilmore	DATE 3/8/12	
CHECKED BY M. Mohseni	DATE 3/9/12	
APPROVED M. Mohseni	DATE 3/19/12	

PLANNING STUDY
WB SR58 OFF-RAMP (MOHAWK ST) BRIDGE

BRIDGE NO. 50-XXXX	CU
SCALE: As Noted	EA 06-48460

USERNAME => $USER DATE PLOTTED => $DATE TIME PLOTTED => $TIME

ADVANCE PLANNING STUDY SHEET (ENGLISH) (REV. 08-01-09)

FILE => $REQUEST

PREPARED FOR THE STATE OF CALIFORNIA - DEPARTMENT OF TRANSPORTATION

DIST.	COUNTY	ROUTE	POST MILES TOTAL PROJECT
06	KER	58	33.1/55.4

TRIP
900 Truxtun Ave, Suite 200
Bakersfield, CA 93301

PARSONS
2201 DUPONT DRIVE, SUITE 200
IRVINE, CA 92612

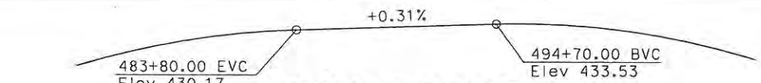

PROFILE GRADE
No Scale

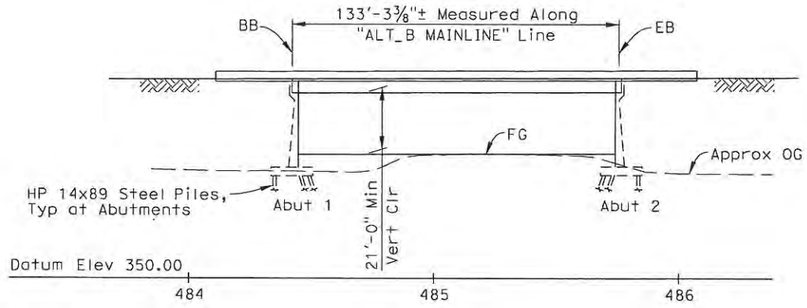

MIRRORED ELEVATION
1" = 30'

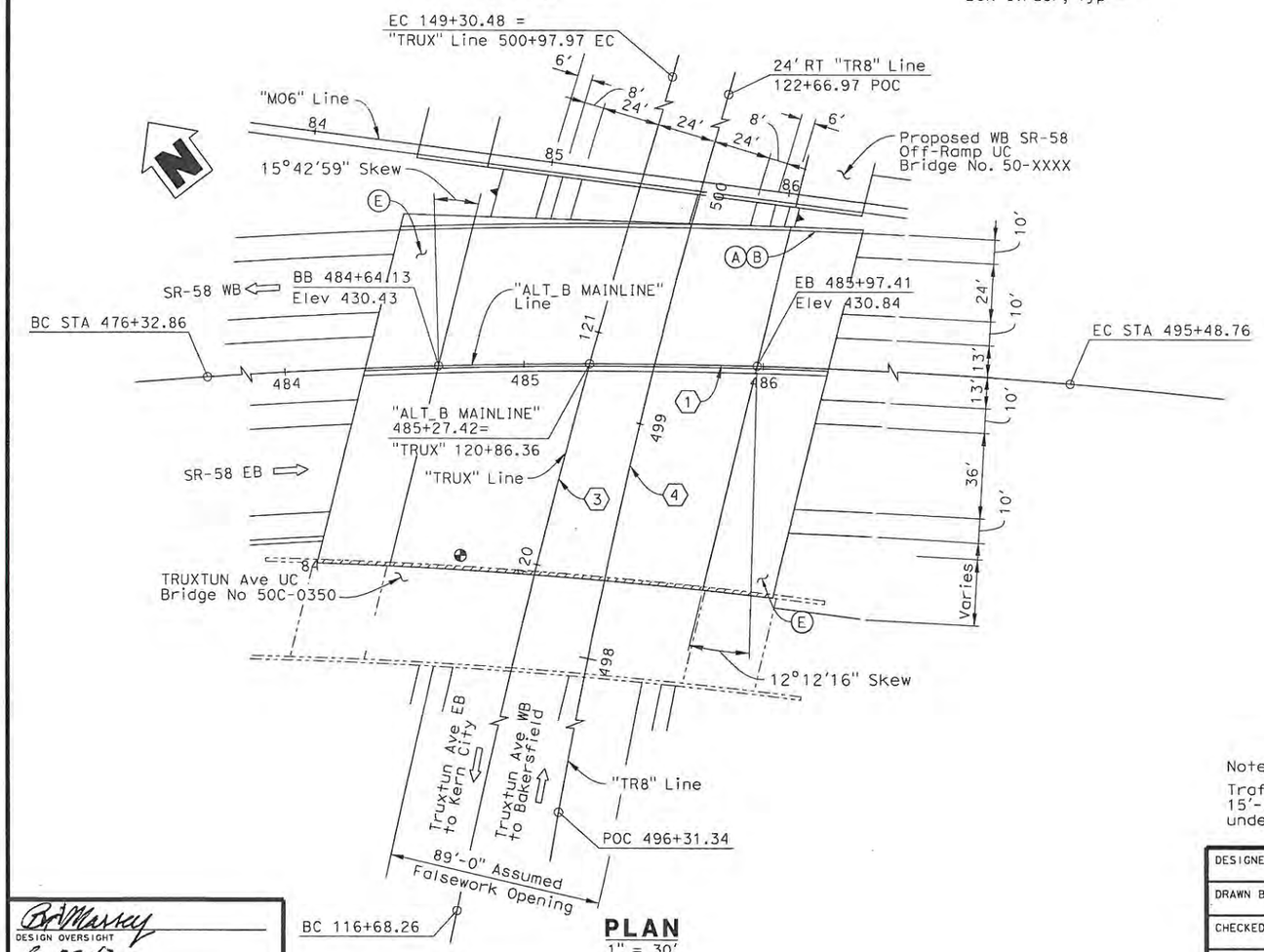

PLAN
1" = 30'

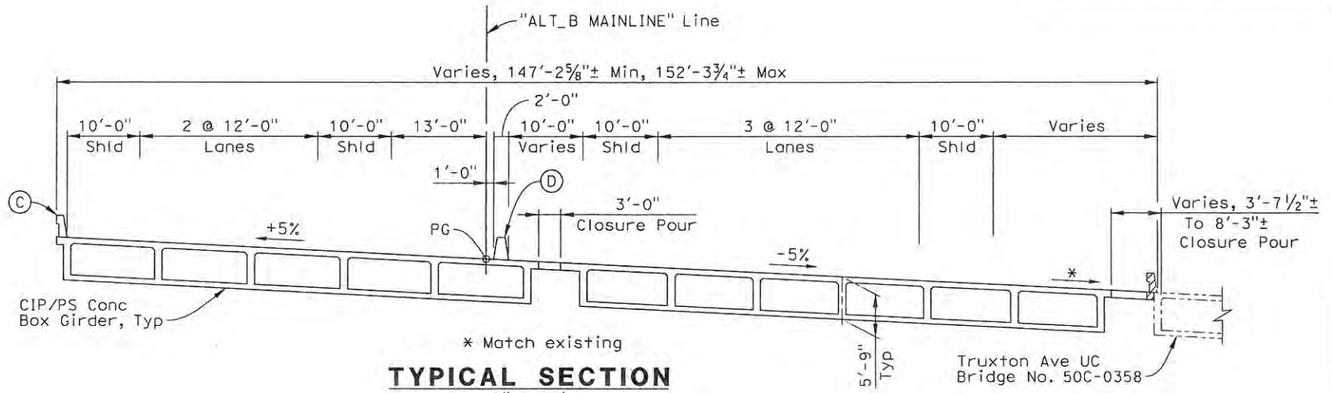

TYPICAL SECTION
1" = 10'

CURVE DATA (1)
R = 2358.00'
△ = 46°30'17"
T = 1013.19'
L = 1913.90'

CURVE DATA (2)
R = 2282.00'
△ = 45°35'48"
T = 959.19'
L = 599.51'

CURVE DATA (3)
R = 4300.00'
△ = 43°28'04"
T = 1714.12'
L = 3262.22'

CURVE DATA (4)
R = 2830.00'
△ = 09°26'50"
T = 233.84'
L = 466.52

Note:
Traffic will pass through construction site, 15'-0" mininum vertical clearance required under falsework.

DATE OF ESTIMATE	10-25-11
BRIDGE REMOVAL	= 194 SF
STRUCTURE DEPTH	= 5'-9"
LENGTH	= 133'-3⅜"
WIDTH	= 149'-9⅛", Avg
AREA	= 19,961 SF
SEISMIC RETROFIT	0
COST/SF INCLUDING 10% MOBILIZATION & 25% CONTINGENCY	= $ 274/SF
TOTAL COST	= $ 5,470,000

NOTES:
(A) Paint "TRUXTUN Ave UC"
(B) Paint "Bridge No. 50C-0358"
(C) Concrete Barrier Type 736
(D) Concrete Barrier Type 60A
(E) Structure Approach Type N(30S)

LEGEND:
Indicates Direction of Traffic
Indicates Point of Minimum Vertical Clearance
Indicates Retaining Wall
Indicates Existing Structure
Indicates limits of removal of existing concrete overhang and barrier

ALTERNATIVE B

DESIGN OVERSIGHT
6-22-12
SIGN OFF DATE

DESIGNED BY	J. Rosso-Mountin	DATE	3/26/12
DRAWN BY	J. Gilmore	DATE	3/26/12
CHECKED BY	R. Mathur	DATE	3/26/12
APPROVED	M. Mohensi	DATE	3/26/12

Mohsen Mohseni
PROJECT ENGINEER

PLANNING STUDY
TRUXTUN AVENUE UC (WIDEN)

BRIDGE NO. 50C-0358	CU
SCALE: As Noted	EA 06-48460

FILE => C:\PW_WORKING\pptopWise\p0038090\dms90794\Alt_B_Truxtun_Ave_UC-pp01.dgn

USERNAME => p0038090 DATE PLOTTED => 3/28/2012 TIME PLOTTED => 12:58:43 PM

PREPARED FOR THE STATE OF CALIFORNIA - DEPARTMENT OF TRANSPORTATION

DIST.	COUNTY	ROUTE	POST MILES TOTAL PROJECT
06	KER	58	33.1/55.4

TRIP
900 Truxtun Ave, Suite 200
Bakersfield, CA 93301

PARSONS
2201 DUPONT DRIVE, SUITE 200
IRVINE, CA 92612

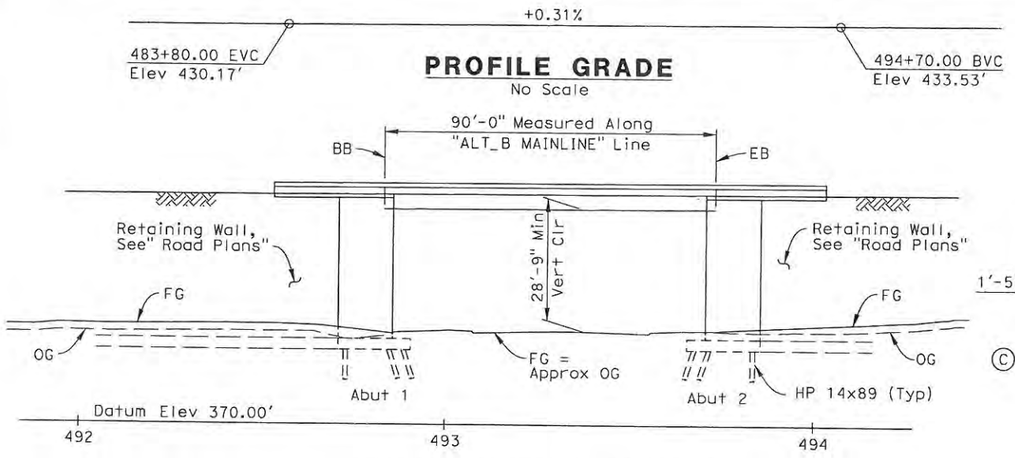

PROFILE GRADE
No Scale

MIRRORED ELEVATION
1" = 20'

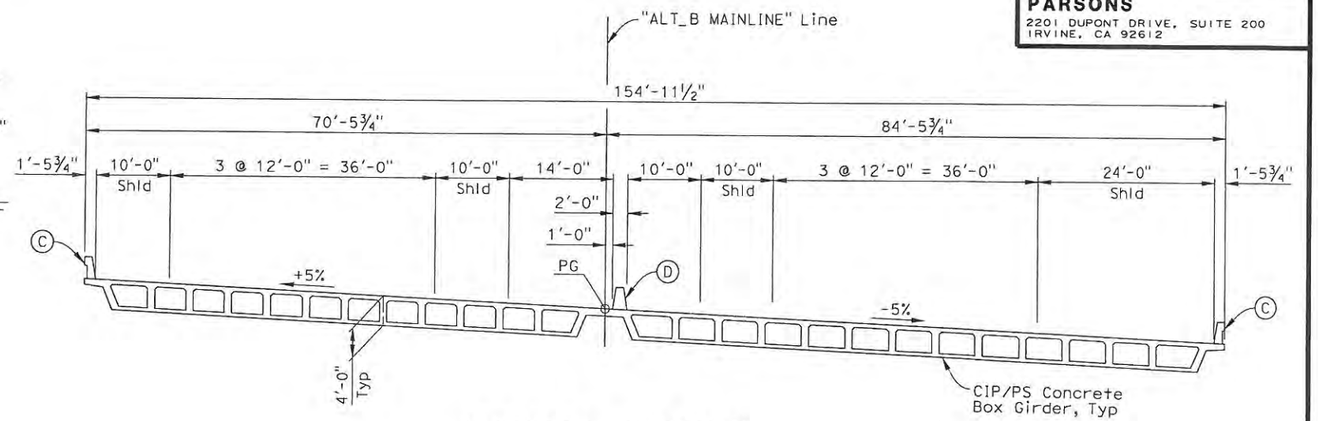

TYPICAL SECTION
1" = 10'

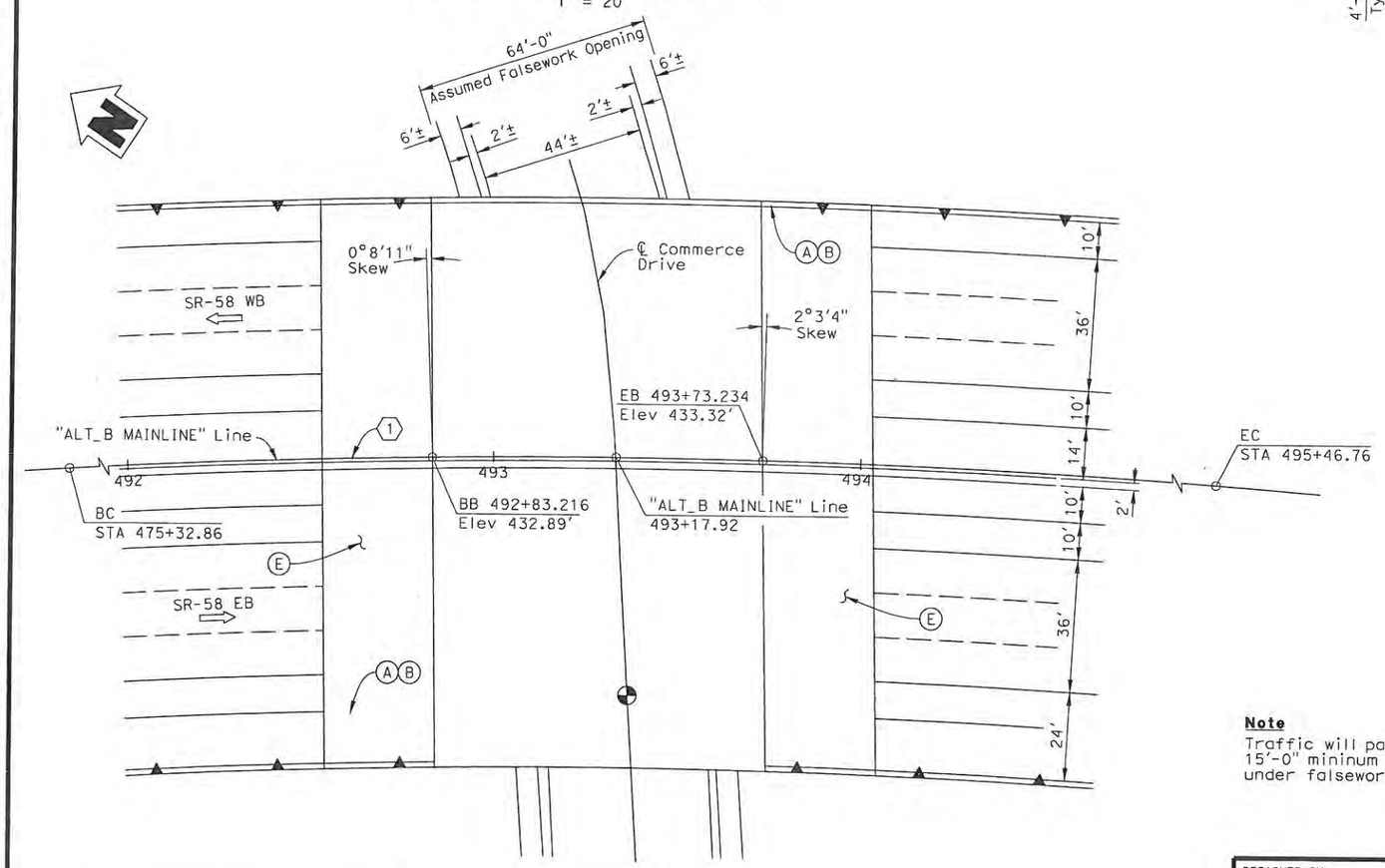

PLAN
1" = 20'

DATE OF ESTIMATE	= 03-26-2012
BRIDGE REMOVAL	= N/A
STRUCTURE DEPTH	= 4'-0"
LENGTH	= 90'-0"
WIDTH	= 154'-11½"
AREA	= 13,948 SF
COST/SF INCLUDING 10% MOBILIZATION & 25% CONTINGENCY	= $393/SF
TOTAL COST	= $5,480,000

CURVE DATA (1)
R = 2358.00
△ = 7°49'49"
T = 458.97'
L = 615.00'

NOTES:
- (A) Paint "Commerce Drive UC"
- (B) Paint "Bridge No. 50-xxxx"
- (C) Concrete Barrier Type 736
- (D) Concrete Barrier Type 60A
- (E) Structure Approach Type N(30S)

LEGEND:
- ⇨ Indicates Direction of Traffic
- ⊕ Indicates Point of Minimum Vertical Clearance
- ▲ Indicates Retaining Wall

Note
Traffic will pass through construction site, 15'-0" mininum vertical clearance required under falsework.

DESIGN OVERSIGHT
6-27-12
SIGN OFF DATE

ADVANCE PLANNING STUDY SHEET (ENGLISH) (REV. 06-01-09)

DESIGNED BY	R. Mathur	DATE	03/26/12
DRAWN BY	S. LEE	DATE	03/26/12
CHECKED BY	M. Mohseni	DATE	03/26/12
APPROVED	M. Mohseni	DATE	03/26/12

Mohsen Mohseni
PROJECT ENGINEER

ALTERNATIVE B
PLANNING STUDY
COMMERCE DRIVE UC

BRIDGE NO. 50-XXXX	CU
SCALE:	EA

FILE => C:\PW_WORKING\PtgpWIseb\p0038090\dms90794\Alt B Commerce Dr-GP01.dgn

USERNAME => p0038090 DATE PLOTTED => 3/28/2012 TIME PLOTTED => 8:31:58 AM

PREPARED FOR THE STATE OF CALIFORNIA - DEPARTMENT OF TRANSPORTATION

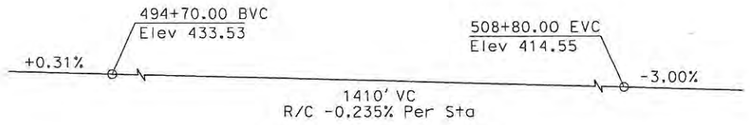

PROFILE GRADE
No Scale

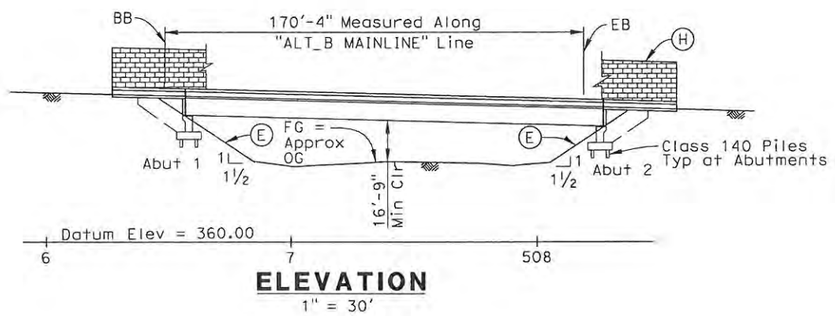

ELEVATION
1" = 30'

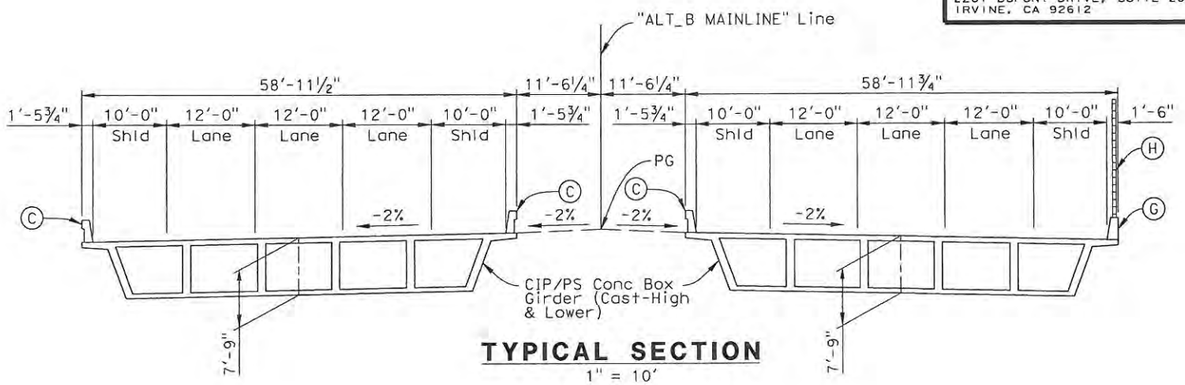

TYPICAL SECTION
1" = 10'

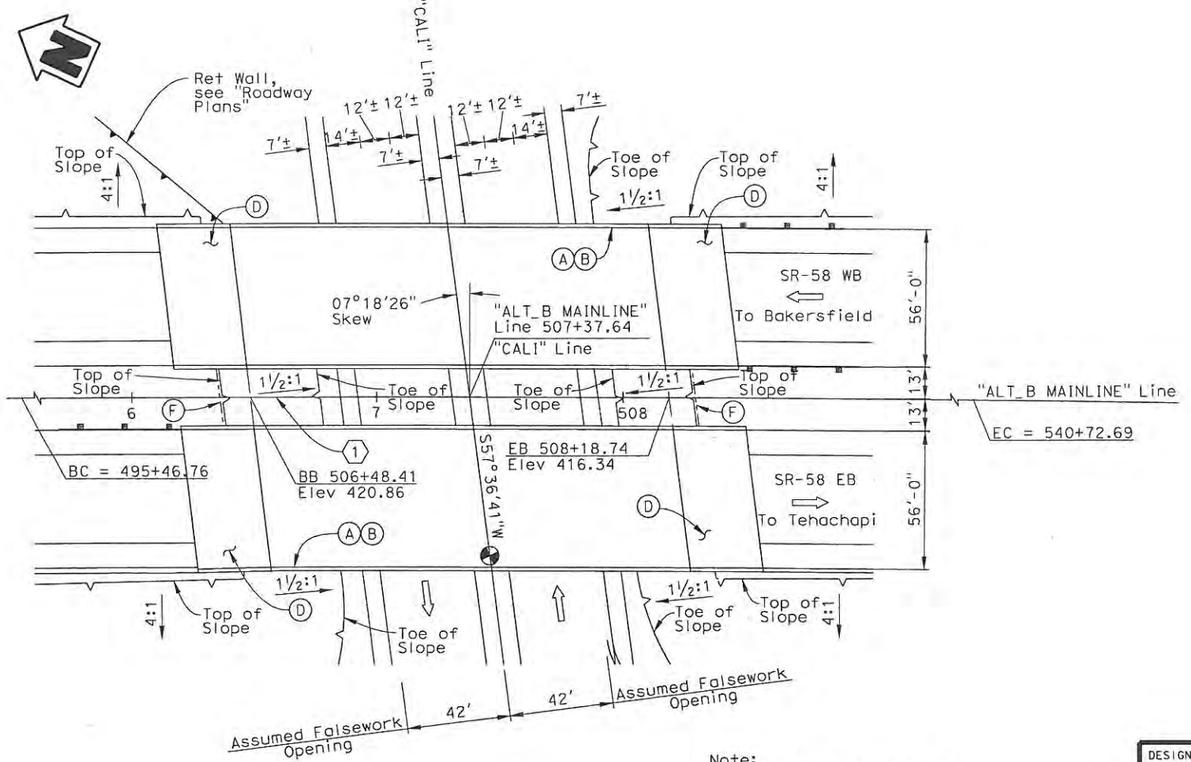

PLAN
1" = 30'

Note:
Traffic will pass through construction site, 15'-0" minimum vertical clearance required under falsework.

DIST.	COUNTY	ROUTE	POST MILES TOTAL PROJECT
06	KER	58	33.1/55.4

TRIP
900 Truxtun Ave, Suite 200
Bakersfield, CA 93301

PARSONS
2201 DUPONT DRIVE, SUITE 200
IRVINE, CA 92612

DATE OF ESTIMATE	= 04/06/12
STRUCTURE DEPTH	= 7'-9"
LENGTH	= 170'-4"
WIDTH	= 117'-11"
AREA	= 20,085 SF
COST/SF INCLUDING 10% MOBILIZATION & 25% CONTINGENCY	= $ 234
TOTAL COST	= $ 4,700,000

NOTES:

(A) Paint "California Avenue Undercrossing"
(B) Paint "Bridge No. 50-XXXXR/L"
(C) Concrete Barrier Type 736
(D) Structure Approach Type N(30S)
(E) Slope Paving
(F) Cable Railing
(G) Concrete Barrier Type 736S
(H) Soundwall Height = 16'-0"

LEGEND:

Indicates Direction of Traffic
Indicates Point of Mininmum Vertical Clearance
Ret Wall

CURVE DATA (1)

R = 20,000.00'
△ = 12°57'57"
T = 2272.67'
L = 4525.93'

ALTERNATIVE B

DESIGNED BY C. Parker	DATE 04/06/12	Mohsen Mohseni PROJECT ENGINEER	**PLANNING STUDY**
DRAWN BY C. Parker	DATE 04/06/12		**CALIFORNIA AVENUE UC**
CHECKED BY H. Mulia	DATE 04/06/12		BRIDGE NO. 50-XXXXR/L / CU
APPROVED H. Mulia	DATE 04/06/12		SCALE: As Noted / EA 06-48460

E C Massey
DESIGN OVERSIGHT
6-22-12
SIGN OFF DATE

ADVANCE PLANNING STUDY SHEET (ENGLISH) (REV. 06-01-09)

FILE => C:\PW_WORKING\PtqpWlseb\p0038090\dms90794\Alt B California Ave UC-GP01.dgn

USERNAME => p0038090 DATE PLOTTED => 4/5/2012 TIME PLOTTED => 12:07:39 PM

PREPARED FOR THE STATE OF CALIFORNIA - DEPARTMENT OF TRANSPORTATION

DIST	COUNTY	ROUTE	POST MILES TOTAL PROJECT
06	KER	58	33.1/55.4

TRIP
900 Truxtun Ave, Suite 200
Bakersfield, CA 93301

PARSONS
2201 DUPONT DRIVE, SUITE 200
IRVINE, CA 92612

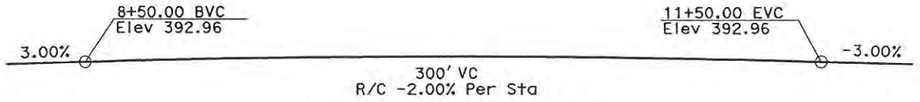

PROFILE GRADE
No Scale

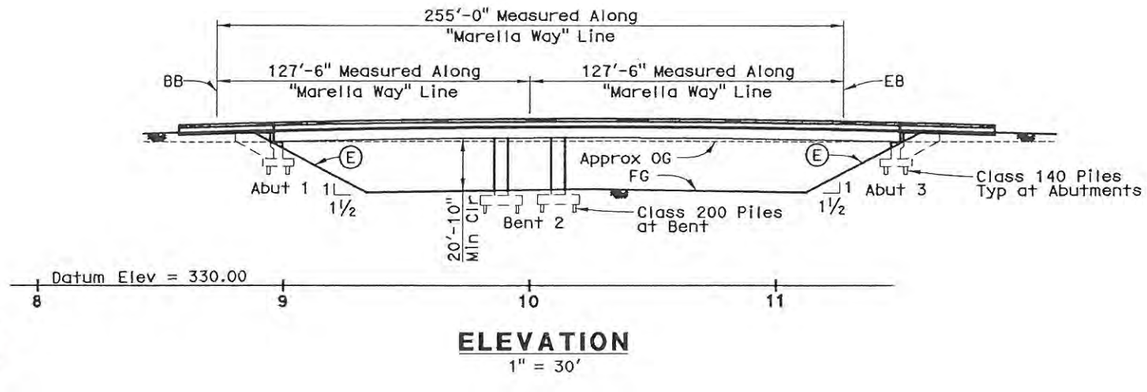

ELEVATION
1" = 30'

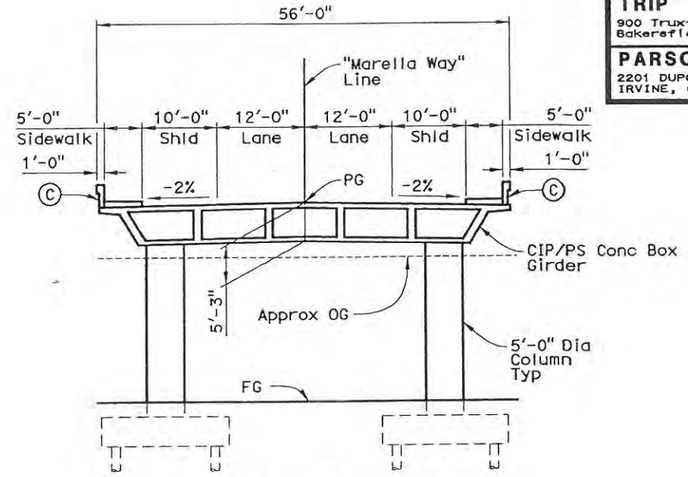

TYPICAL SECTION
1" = 10'
Note: All piles not shown.

DATE OF ESTIMATE	=	10/17/11
STRUCTURE DEPTH	=	5'-3"
LENGTH	=	255'-00"
WIDTH	=	56'-0"
AREA	=	14,280 SF
COST/SF INCLUDING 10% MOBILIZATION & 25% CONTINGENCY	=	$ 195
TOTAL COST	=	$ 2,780,000

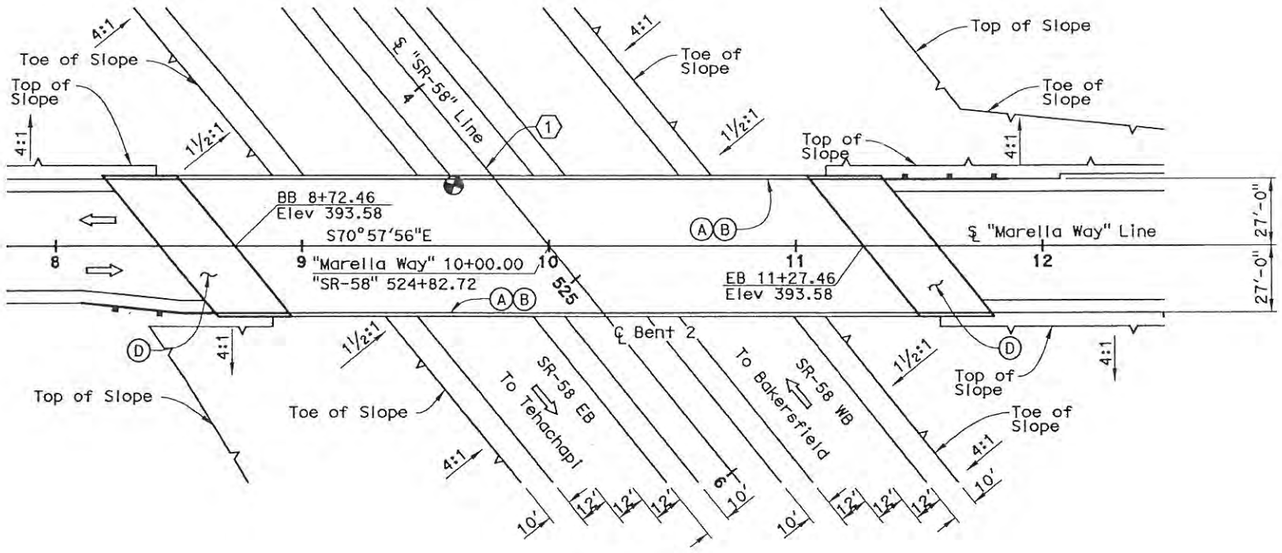

PLAN
1" = 30'

NOTES:

(A) Paint "Marella Way Overcrossing"
(B) Paint "Bridge No. 50-XXXX"
(C) Concrete Barrier Type 26
(D) Structure Approach Type N(30S)
(E) Slope Paving

LEGEND:

Indicates Direction of Traffic
Indicates Point of Mininmum Vertical Clearance
MBGR

CURVE DATA (1)
R = 20,000.00'
△ = 12°57'57"
T = 2272.67'
L = 4525.93'

ALTERNATIVE B

Note:
Traffic will not pass through construction site. No falsework opening is required.

DESIGN OVERSIGHT
6-8-12
SIGN OFF DATE

DESIGNED BY	C. Parker	DATE	10/17/11
DRAWN BY	C. Parker	DATE	10/17/11
CHECKED BY	H. Mulla	DATE	11/17/11
APPROVED	H. Mulla	DATE	11/17/11

Mohsen Mohseni
PROJECT ENGINEER

PLANNING STUDY
MARELLA WAY OC

BRIDGE NO. 50-XXXX	CU
SCALE: As Noted	EA 06-48460

ADVANCE PLANNING STUDY SHEET (ENGLISH) (REV. 05-01-09)

FILE => $REQUEST

USERNAME => $USER DATE PLOTTED => $DATE TIME PLOTTED => $TIME

PREPARED FOR THE STATE OF CALIFORNIA - DEPARTMENT OF TRANSPORTATION

DIST.	COUNTY	ROUTE	POST MILES TOTAL PROJECT
06	KER	58	33.1/55.4

TRIP
900 Truxtun Ave, Suite 200
Bakersfield, CA 93301

PARSONS
2201 DUPONT DRIVE, SUITE 200
IRVINE, CA 92612

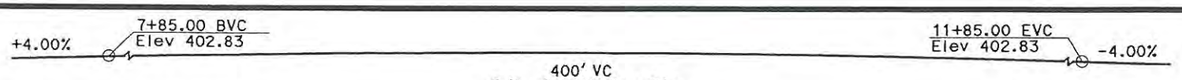

PROFILE GRADE
No Scale

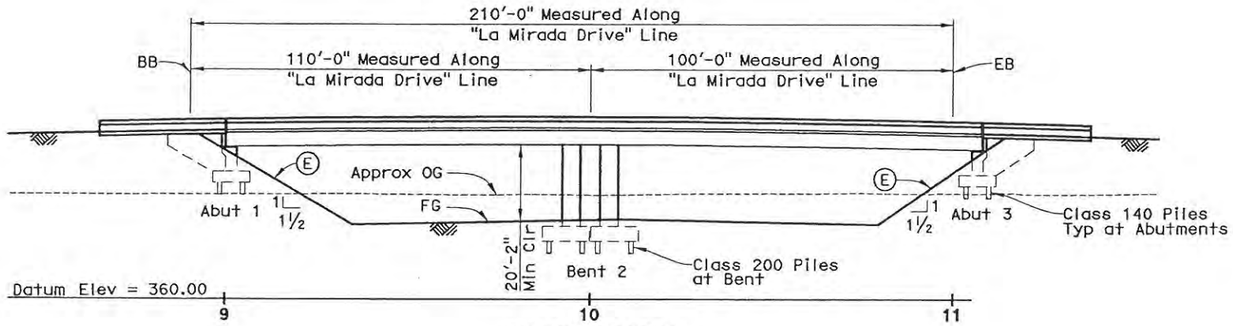

ELEVATION
1" = 20'

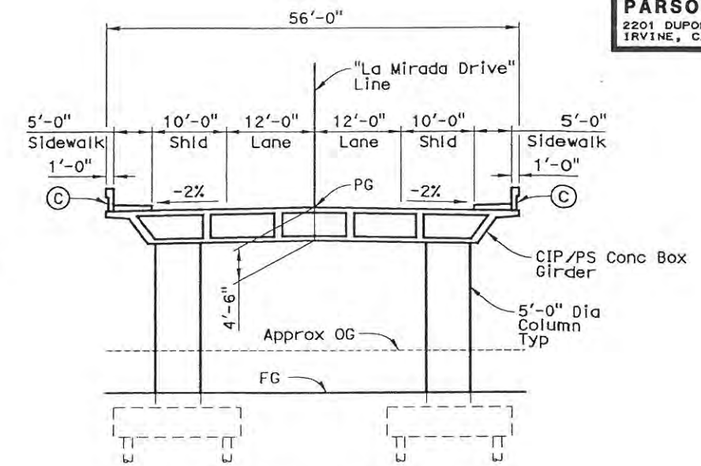

TYPICAL SECTION
1" = 10'
Note: All piles not shown.

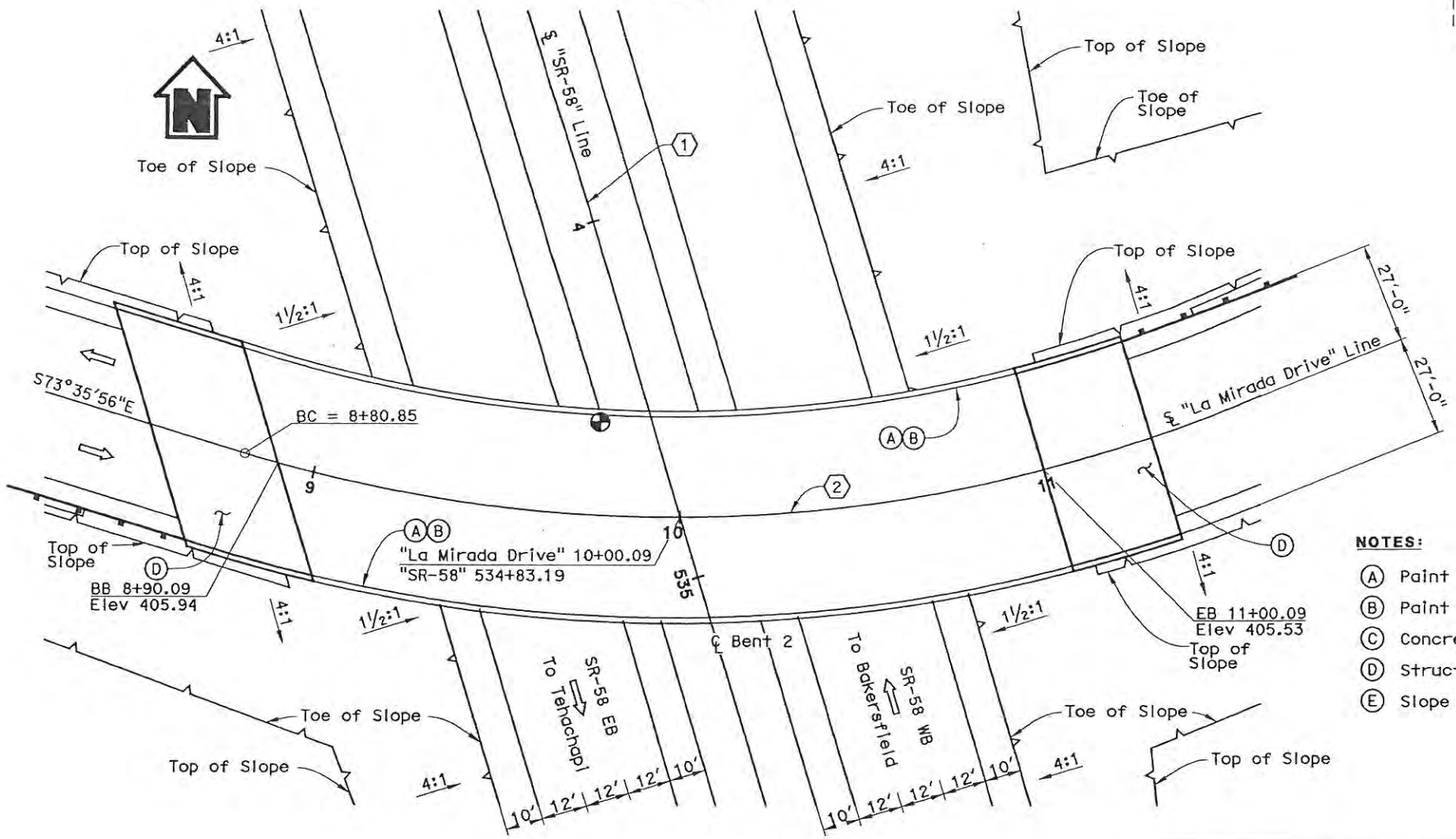

PLAN
1" = 20'

DATE OF ESTIMATE	= 10/17/11
STRUCTURE DEPTH	= 4'-6"
LENGTH	= 210'-00"
WIDTH	= 56'-0"
AREA	= 11,760 SF
COST/SF INCLUDING 10% MOBILIZATION & 25% CONTINGENCY	= $ 216
TOTAL COST	= $ 2,540,000

LEGEND:
- Indicates Direction of Traffic
- Indicates Point of Mininmum Vertical Clearance
- MBGR

NOTES:
- (A) Paint "La Mirada Drive Overcrossing"
- (B) Paint "Bridge No. 50-XXXX"
- (C) Concrete Barrier Type 26
- (D) Structure Approach Type N(30S)
- (E) Slope Paving

CURVE DATA (1)
R = 20,000.00'
Δ = 12°57'57"
T = 2272.67'
L = 4525.93'

CURVE DATA (2)
R = 400.00'
Δ = 52°42'44"
T = 198.18'
L = 368.00'

Note:
Traffic will not pass through construction site. No falsework opening is required.

ALTERNATIVE B

DESIGNED BY	C. Parker	DATE	10/17/11
DRAWN BY	C. Parker	DATE	10/17/11
CHECKED BY	H. Mulia	DATE	11/17/11
APPROVED	H. Mulia	DATE	11/17/11

Mohsen Mohseni
PROJECT ENGINEER

PLANNING STUDY
LA MIRADA DRIVE OC

BRIDGE NO. 50-XXXX	CU
SCALE: As Noted	EA 06-48460

B Massey
DESIGN OVERSIGHT
6-22-12
SIGN OFF DATE

ADVANCE PLANNING STUDY SHEET (ENGLISH) (REV. 06-01-09)

FILE => $REQUEST

USERNAME => $USER DATE PLOTTED => $DATE TIME PLOTTED => $TIME

PREPARED FOR THE STATE OF CALIFORNIA - DEPARTMENT OF TRANSPORTATION

DIST.	COUNTY	ROUTE	POST MILES TOTAL PROJECT
06	KER	58	33.1/55.4

TRIP
900 Truxtun Ave, Suite 200
Bakersfield, CA 93301

PARSONS
2201 DUPONT DRIVE, SUITE 200
IRVINE, CA 92612

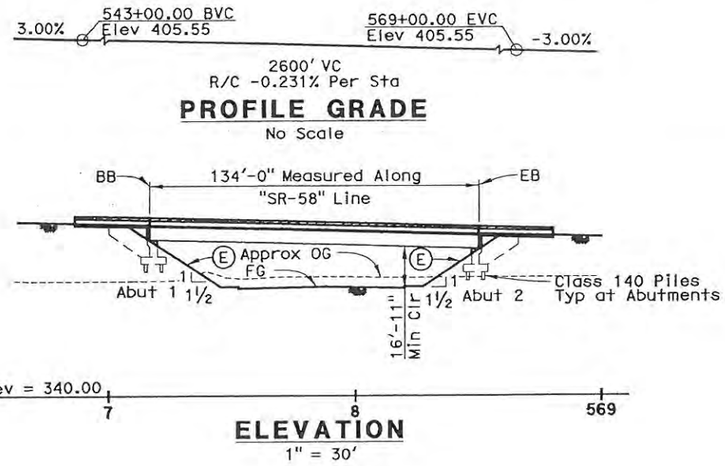

PROFILE GRADE
No Scale

ELEVATION
1" = 30'

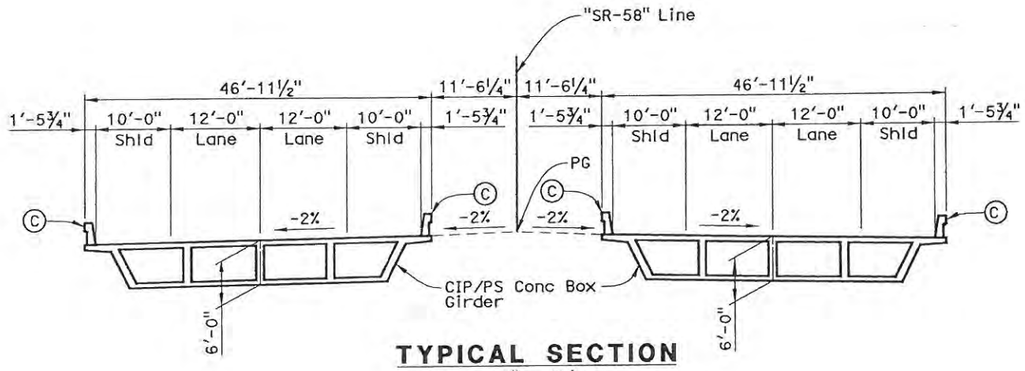

TYPICAL SECTION
1" = 10'

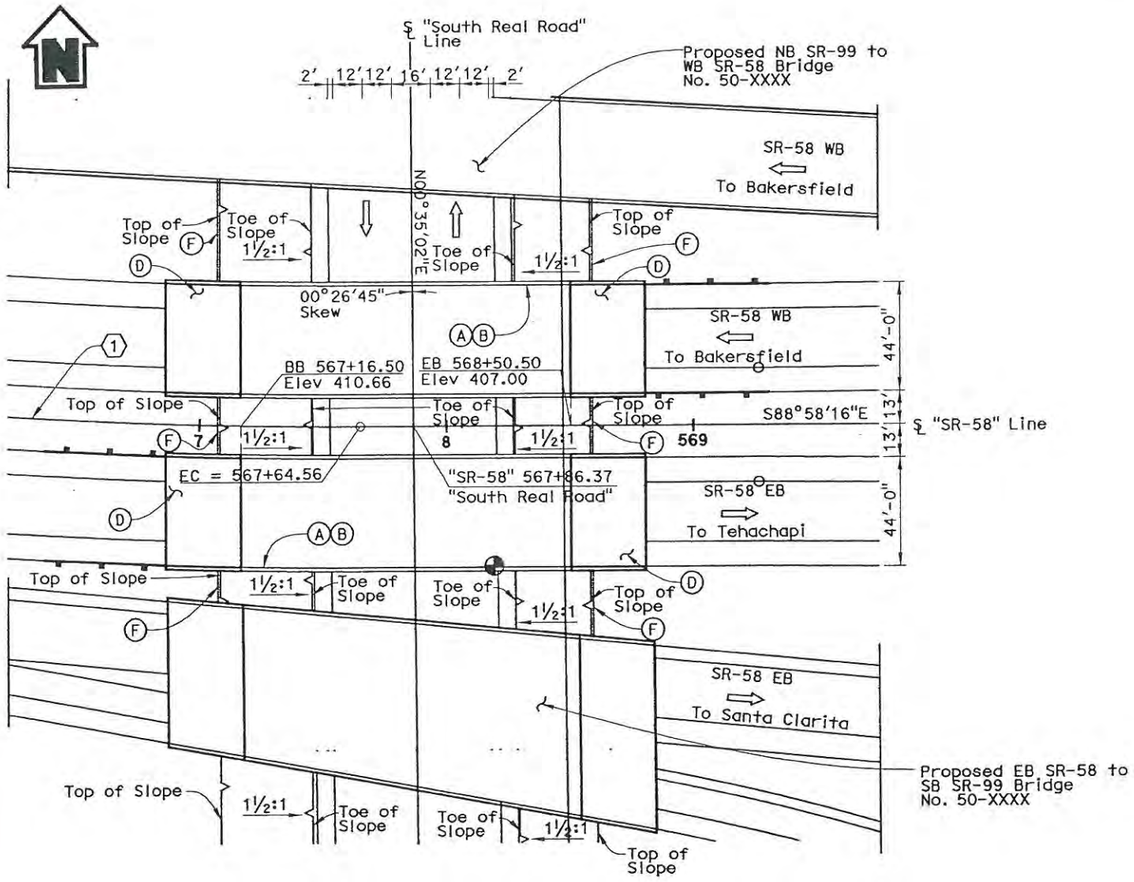

PLAN
1" = 30'

Note:
S Real Road will be closed during construction.

DATE OF ESTIMATE	= 10/17/11
STRUCTURE DEPTH	= 6'-0"
LENGTH	= 134'-0"
WIDTH	= 93'-11"
AREA	= 12,585 SF
COST/SF INCLUDING 10% MOBILIZATION & 25% CONTINGENCY	= $ 210
TOTAL COST	= $ 2,640,000

NOTES:

(A) Paint "South Real Road Undercrossing"
(B) Paint "Bridge No. 50-XXXXR/L"
(C) Concrete Barrier Type 736
(D) Structure Approach Type N(30S)
(E) Slope Paving
(F) Cable Railing

LEGEND:

Indicates Direction of Traffic
Indicates Point of Mininmum Vertical Clearance
MBGR

CURVE DATA (1)
R = 2100.00'
△ = 73°26'39"
T = 1566.55'
L = 2691.87'

ALTERNATIVE B

E2 Massey
DESIGN OVERSIGHT
6-22-12
SIGN OFF DATE

DESIGNED BY C. Parker	DATE 10/17/11	Mohsen Mohseni PROJECT ENGINEER	PLANNING STUDY
DRAWN BY C. Parker	DATE 10/17/11		SOUTH REAL ROAD UC
CHECKED BY H. Mulla	DATE 11/17/11		BRIDGE NO. 50-XXXXR/L / CU
APPROVED H. Mulla	DATE 11/17/11		SCALE: As Noted / EA 06-48460

FILE => $REQUEST
TIME PLOTTED => $TIME
DATE PLOTTED => $DATE
USERNAME => $USER

PREPARED FOR THE STATE OF CALIFORNIA - DEPARTMENT OF TRANSPORTATION

DIST.	COUNTY	ROUTE	POST MILES TOTAL PROJECT
06	KER	58	33.1/55.4

TRIP
900 Truxtun Ave, Suite 200
Bakersfield, CA 93301

PARSONS
2201 DUPONT DRIVE, SUITE 200
IRVINE, CA 92612

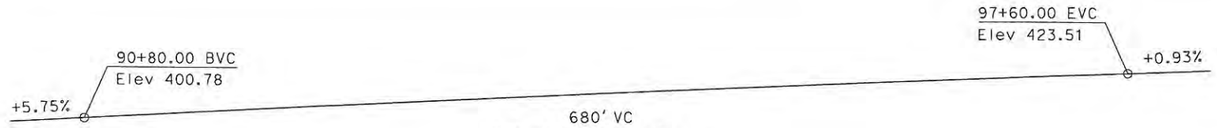

PROFILE GRADE

No Scale

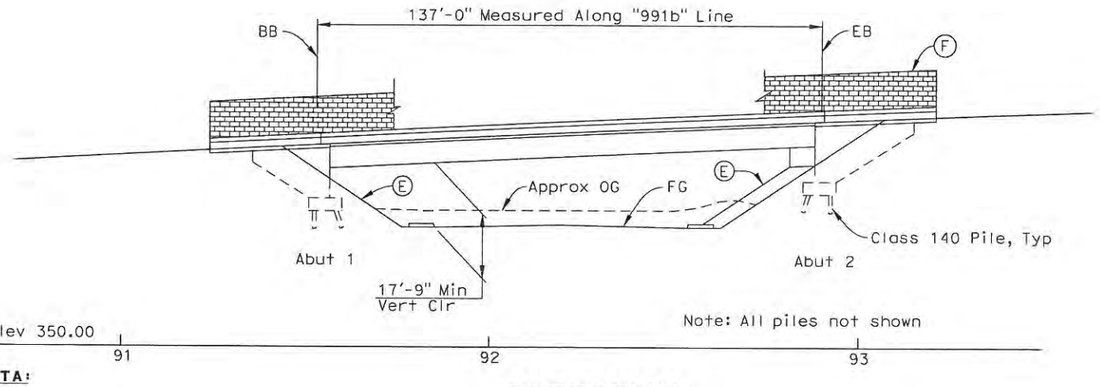

PILE DATA:

Class 140 (PP 14 x 0.438) Piles
Design Loading 140 kips @ Service
Design Length = 45'-0"

ELEVATION

1" = 20'

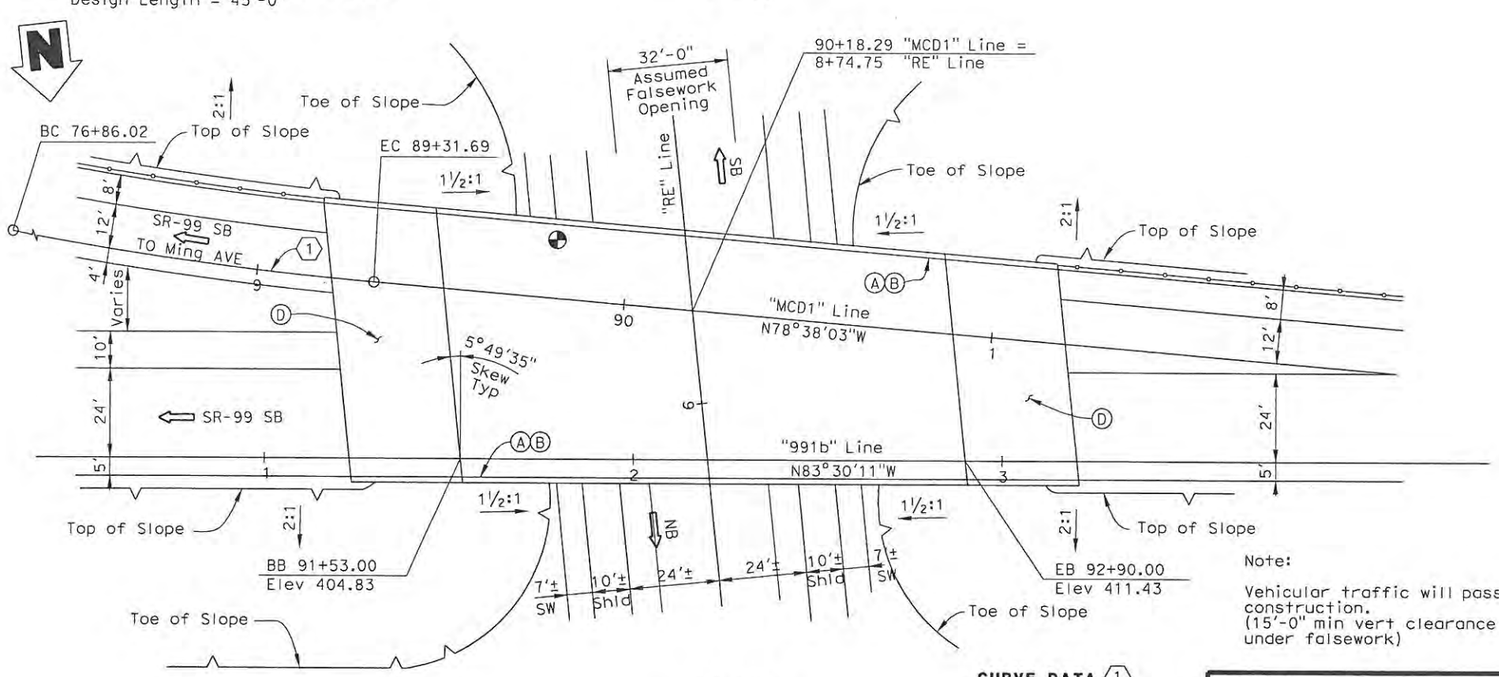

PLAN

1" = 20'

CURVE DATA (1)

R = 1000.00'
Δ = 71°22'18"
T = 718.20'
L = 1245.67'

Note:

Vehicular traffic will pass through construction.
(15'-0" min vert clearance required under falsework)

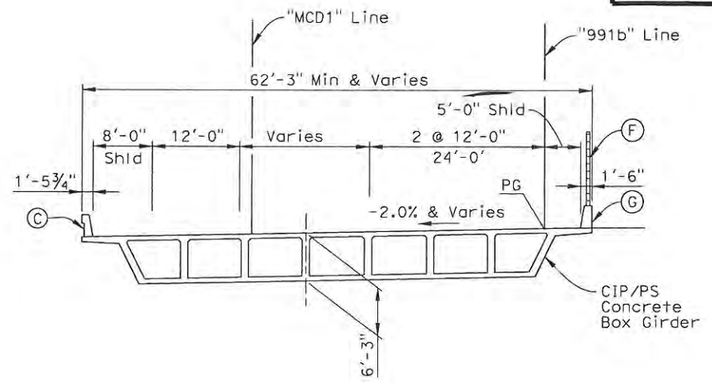

TYPICAL SECTION

1" = 10'

NOTES

(A) Paint "EB SR-58 to SB SR-99 (S. Real Rd) UC"
(B) Paint "Br. No. 50-xxxx"
(C) Concrete Barrier Type 736
(D) Structure Approach, Type N(30S)
(E) Slope Paving
(F) Soundwall Height = 10'-0"
(G) Concrete Barrier Type 736S

LEGEND

⇨ Indicates Direction of Traffic

◐ Indicates Point of Minimum Vertical Clearance

DATE OF ESTIMATE	04/06/12
STRUCTURE DEPTH	= 6'-3"
LENGTH	= 137'-0"
WIDTH	= 62'-3" to 74'-3"
AREA	= 9,350 SF
COST/SF INCLUDING 10% MOBILIZATION & 25% CONTINGENCY	= $190
TOTAL COST	= $1,780,000

ALTERNATIVE B

B Massey
DESIGN OVERSIGHT
6-6-12
SIGN OFF DATE

DESIGNED BY	A. Hamza	DATE	04/06/12
DRAWN BY	A. Segura	DATE	04/06/12
CHECKED BY	M. Mohseni	DATE	04/06/12
APPROVED	M. Mohseni	DATE	04/06/12

Mohsen Mohseni
PROJECT ENGINEER

PLANNING STUDY

EB SR-58 TO SB SR-99 (S. REAL RD) UC

BRIDGE NO. 50-xxxx	CU
SCALE: As Noted	EA 06-48460

FILE => C:\PW_WORKING\PtgpWlseb\p0038090\dms90794\Alt B EB SR58 TO SB SR99-GP 01.dgn

USERNAME => p0038090 DATE PLOTTED => 4/5/2012 TIME PLOTTED => 9:15:24 AM

PREPARED FOR THE STATE OF CALIFORNIA - DEPARTMENT OF TRANSPORTATION

DIST.	COUNTY	ROUTE	POST MILES TOTAL PROJECT
06	KER	58	33.1/55.4

TRIP
900 Truxtun Ave, Suite 200
Bakersfield, CA 93301

PARSONS
2201 DUPONT DRIVE, SUITE 200
IRVINE, CA 92612

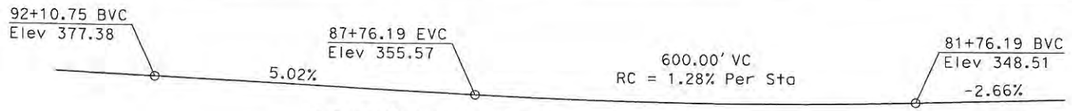

PROFILE GRADE
No Scale
("991" Line)

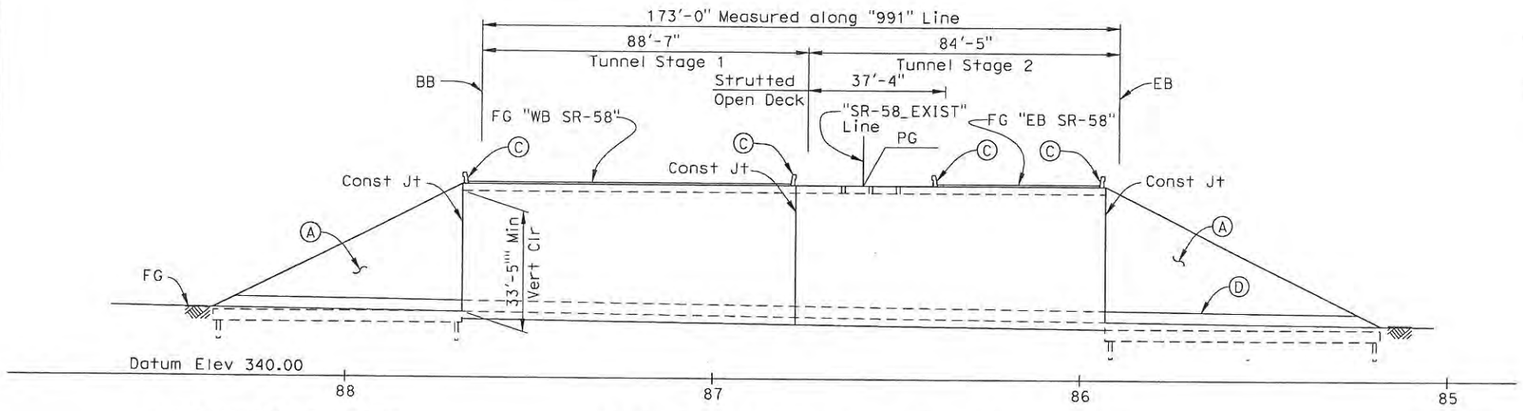

Note: All piles not shown

ELEVATION
1" = 20'

Assume 45 ton pile footings

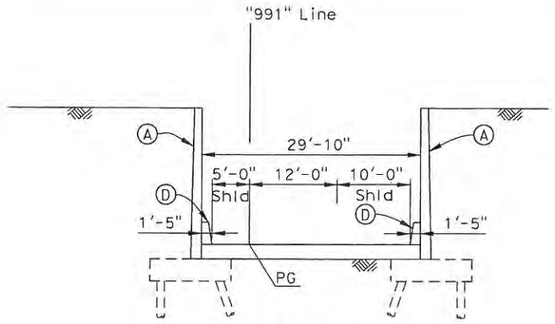

SECTION A-A
1" = 10'

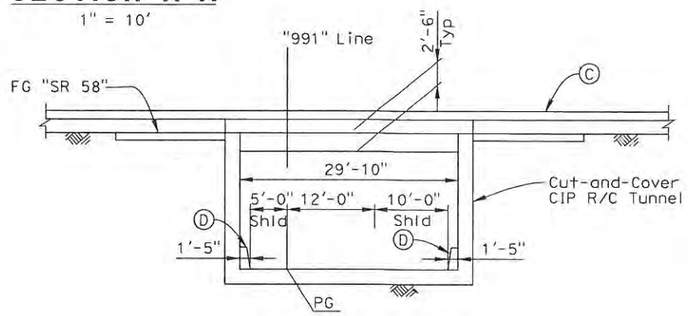

SECTION B-B
1" = 10'

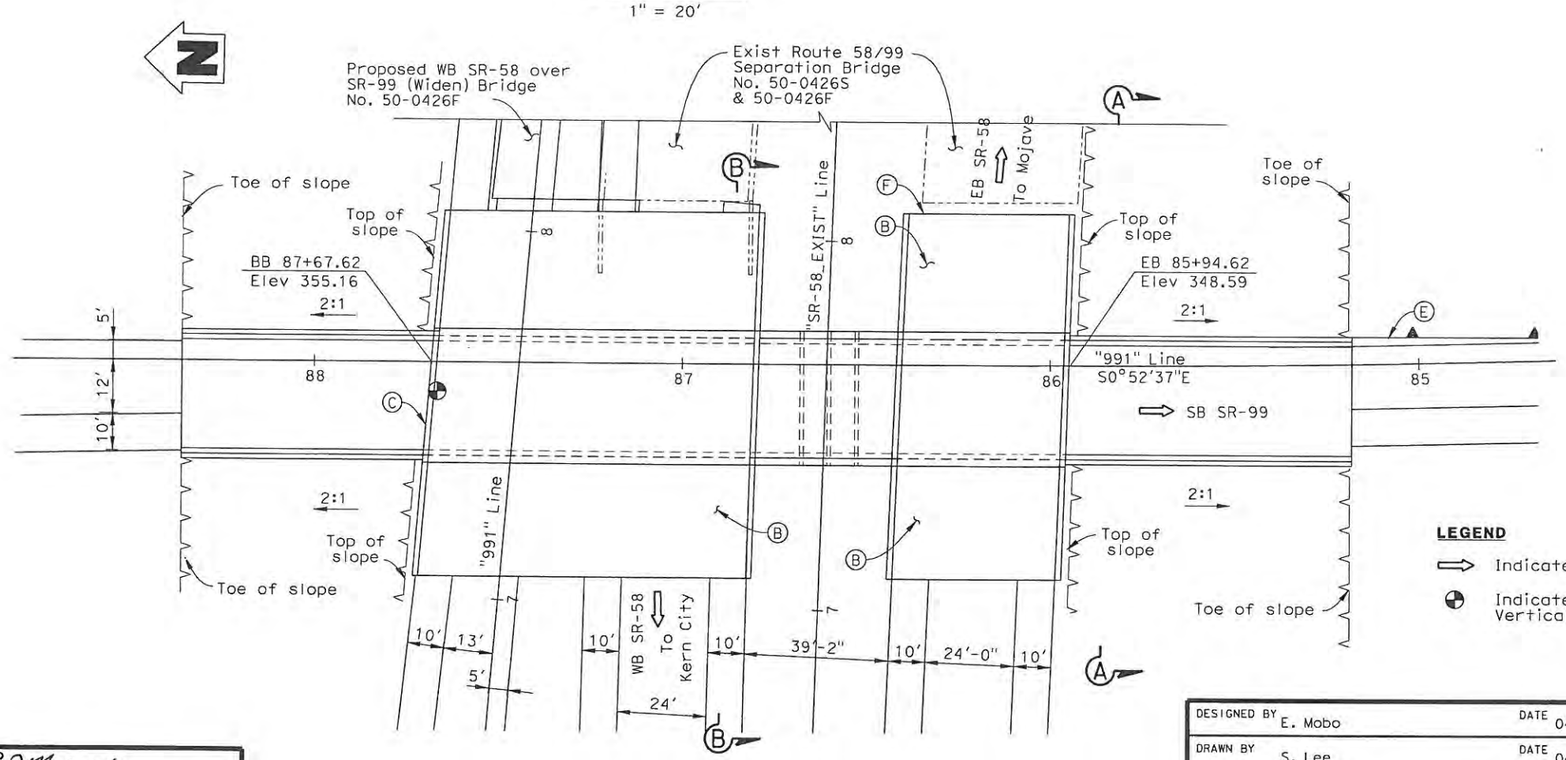

PLAN
1" = 20'

NOTES

- (A) Wingwall
- (B) Approach Slab Type N(30S)
- (C) Concrete Barrier Type 736
- (D) Concrete Barrier Type 60D
- (E) Retaining Wall
- (F) Sawcut and remove portion of existing approach slab at adjacent bridge to permit approach slab construction.

LEGEND

- ⇨ Indicates Direction of Traffic
- ◔ Indicates Point & Minimum Vertical Clearance

DATE OF ESTIMATE	04/06/12
BRIDGE REMOVAL	= N/A
STRUCTURE DEPTH	= 2'-6"
LENGTH	= 173'-0"
WIDTH	= 33'-10"
AREA	= 5,853 SF
COST/SF INCLUDING 10% MOBILIZATION & 25% CONTINGENCY	= $ 619/SF
TOTAL COST	= $ 3,620,000

ALTERNATIVE B

DESIGN OVERSIGHT
6-8-12
SIGN OFF DATE

DESIGNED BY	E. Mobo	DATE	04/06/12
DRAWN BY	S. Lee	DATE	04/06/12
CHECKED BY	R. Mathur	DATE	04/06/12
APPROVED	M. Mohseni	DATE	04/06/12

Mohsen Mohseni
PROJECT ENGINEER

PLANNING STUDY

WB SR-58 OFF RAMP GRADE SEPARATION

BRIDGE NO. 50-xxxx	CU
SCALE: As Noted	EA 06-48460

ADVANCE PLANNING STUDY SHEET (ENGLISH) (REV. 06-01-09)

FILE => C:\PW_Working\PTGpwlseb\p0038090\dms90794\Alt B WB SR58 Off Ramp Grade Sep-GP01.dgn

USERNAME => p0038090 DATE PLOTTED => 4/10/2012 TIME PLOTTED => 5:32:55 PM

PREPARED FOR THE STATE OF CALIFORNIA - DEPARTMENT OF TRANSPORTATION

DIST.	COUNTY	ROUTE	POST MILES TOTAL PROJECT
06	KER	58	33.1/55.4

TRIP
900 Truxtun Ave, Suite 200
Bakersfield, CA 93301

PARSONS
2201 DUPONT DRIVE, SUITE 200
IRVINE, CA 92612

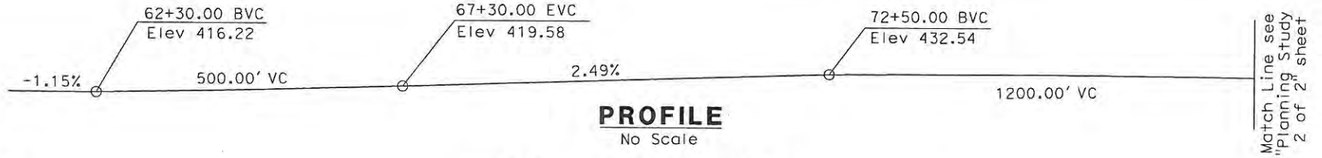

PROFILE
No Scale

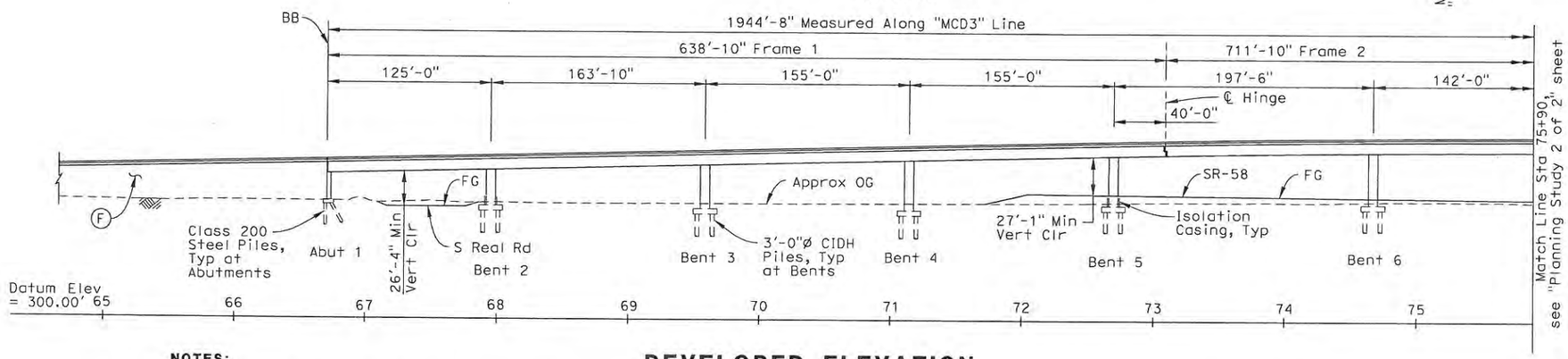

DEVELOPED ELEVATION
1" = 50'

NOTES:

Ⓐ Paint "NB SR-99 To WB SR-58 Connector"
Ⓑ Paint "Bridge No. XX-XXXX"
Ⓒ Concrete Barrier Type 742
Ⓓ Concrete Barrier Type 736
Ⓔ Structure Approach Type N (30S)
Ⓕ Retaining Wall, see "Road Plans"

Note:
Traffic will pass through construction site, 15'-0" minimum vertical clearance required under falsework.

LEGEND:

⇨ Indicates Direction of Traffic
⊕ Indicates Point of Minimum Vertical Clearance
▲—— Retaining Wall

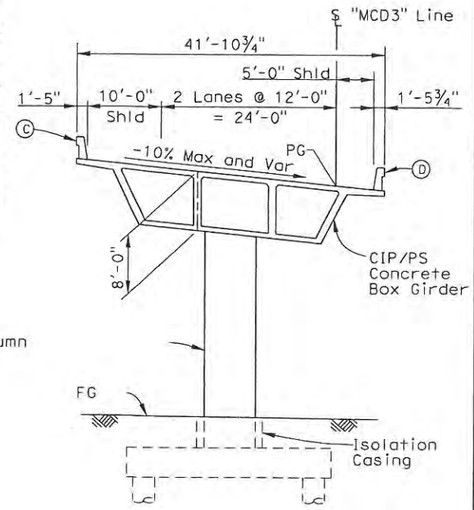

Note: All Piles not Shown.

TYPICAL SECTION
1" = 10'

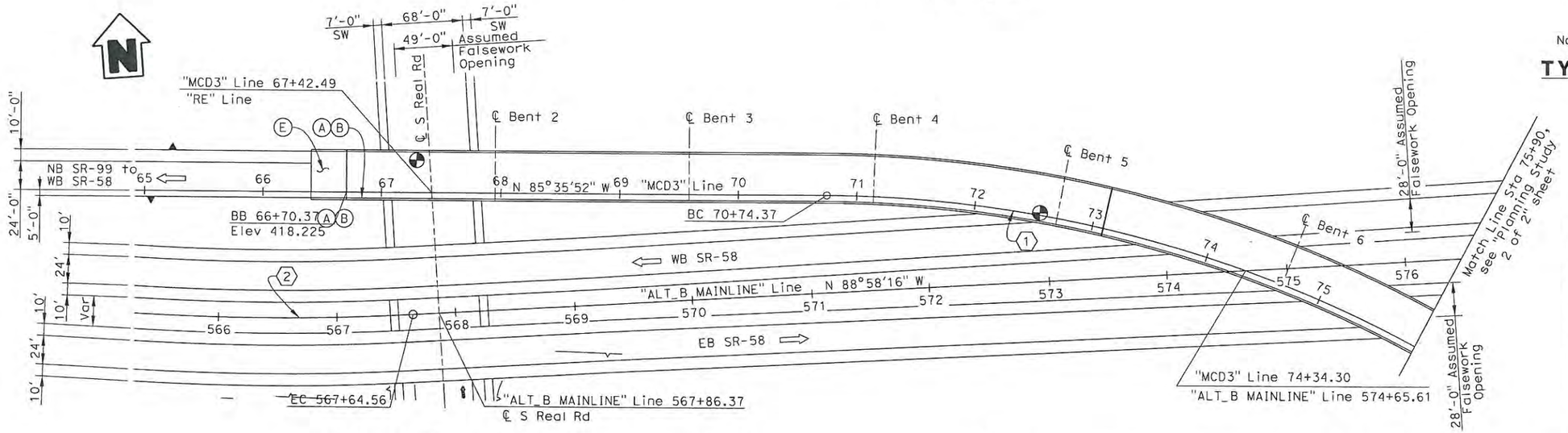

CURVE DATA ①	CURVE DATA ②
R = 1050.00'	R = 2100.00'
△ = 91°18'36"	△ = 73°26'39"
T = 1074.29'	T = 1566.55'
L = 1673.35'	L = 2691.87'

PLAN
1" = 50'

DATE OF ESTIMATE	= 04/06/12
STRUCTURE DEPTH	= 8'-0"
LENGTH	= 1944'-8"
WIDTH	= 41'-10¾"
AREA	= 81,462 SF
COST/SF INCLUDING 10% MOBILIZATION & 25% CONTINGENCY	= $ 217
TOTAL COST	= $ 17,670,000

ALTERNATIVE B

B Massey
DESIGN OVERSIGHT
6-22-12
SIGN OFF DATE

DESIGNED BY	S. Mullangi	DATE	04/06/12
DRAWN BY	P. Johnson	DATE	04/06/12
CHECKED BY	M. Mohseni	DATE	04/06/12
APPROVED	M. Mohseni	DATE	04/06/12

Mohsen Mohseni
PROJECT ENGINEER

PLANNING STUDY 1 OF 2

NB SR-99 TO WB SR-58 CONNECTOR

BRIDGE NO. 50-XXXX	CU
SCALE: As Noted	EA 06-48460

ADVANCE PLANNING STUDY SHEET (ENGLISH) (REV. 06-01-09)

FILE => C:\PW_Working\PTGpwlseb\p0038090\dms90794\Alt B NB SR99 TO WB SR58 Conn-GP01.dgn

USERNAME => p0038090 DATE PLOTTED => 4/10/2012 TIME PLOTTED => 12:20:17 PM

PREPARED FOR THE STATE OF CALIFORNIA - DEPARTMENT OF TRANSPORTATION

DIST.	COUNTY	ROUTE	POST MILES TOTAL PROJECT
06	KER	58	33.1/55.4

TRIP
900 Truxtun Ave, Suite 200
Bakersfield, CA 93301

PARSONS
2201 DUPONT DRIVE, SUITE 200
IRVINE, CA 92612

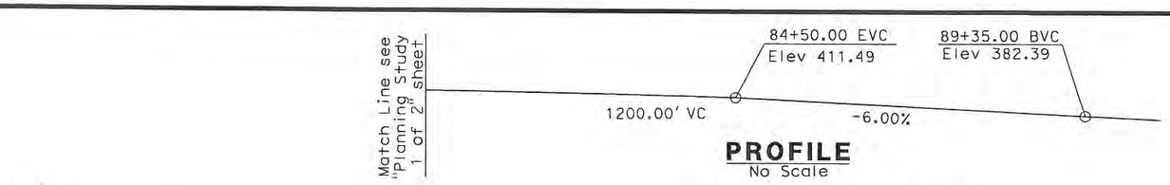

PROFILE
No Scale

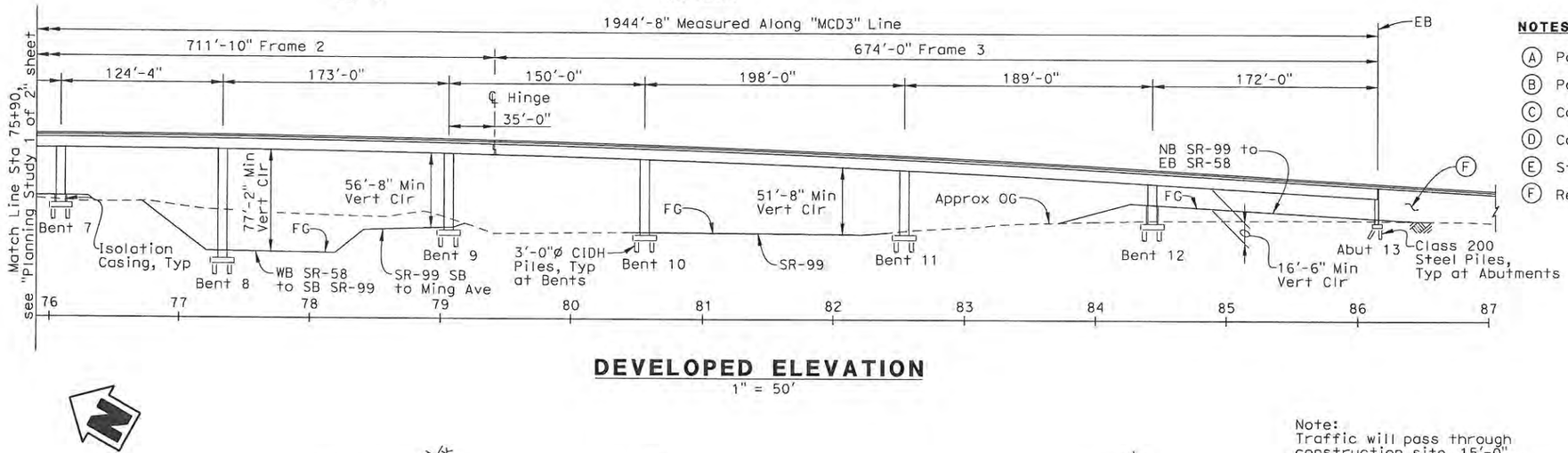

DEVELOPED ELEVATION
1" = 50'

NOTES:

(A) Paint "NB SR-99 To WB SR-58 Connector"
(B) Paint "Bridge No. XX-XXXX"
(C) Concrete Barrier Type 742
(D) Concrete Barrier Type 736
(E) Structure Approach Type N (30S)
(F) Retaining Wall, see "Road Plans"

Note:
Traffic will pass through construction site, 15'-0" minimum vertical clearance required under falsework.

LEGEND:

⇨ Indicates Direction of Traffic
Indicates Point of Minimum Vertical Clearance
Retaining Wall

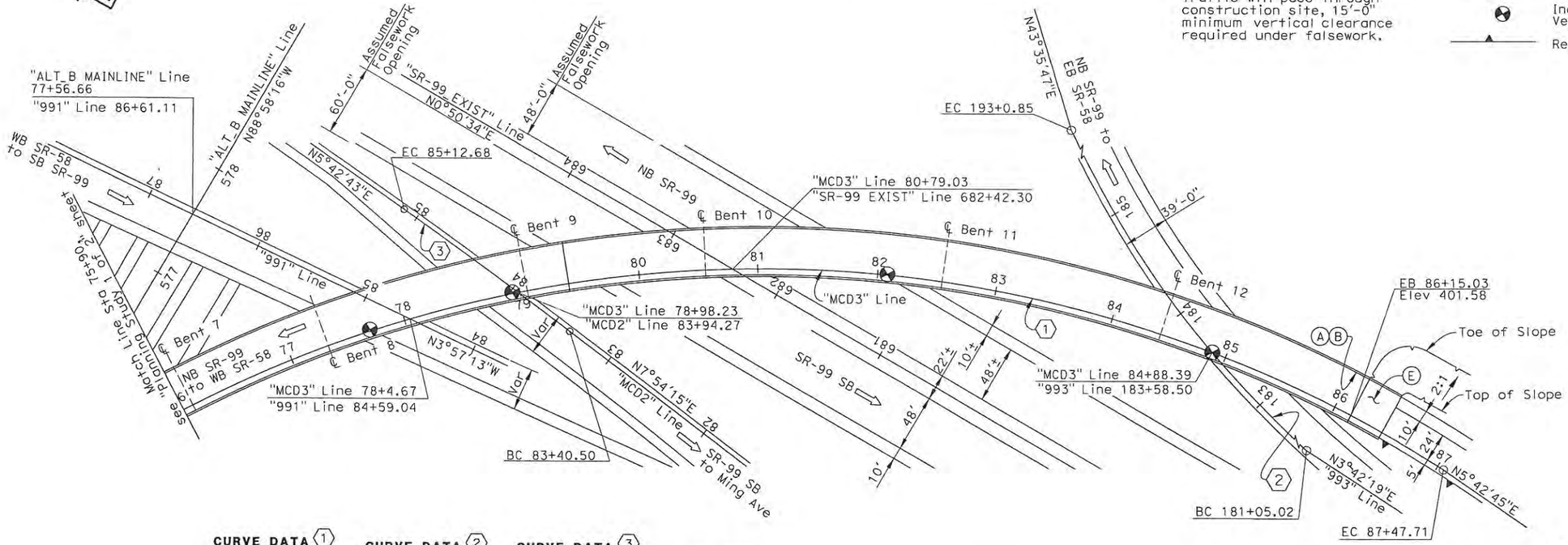

PLAN
1" = 50'

CURVE DATA (1)
R = 1050.00'
△ = 91°18'36"
T = 1074.29'
L = 1673.35'

CURVE DATA (2)
R = 850.00'
△ = 80°36'27"
T = 720.95'
L = 1195.84'

CURVE DATA (3)
R = 4500.00'
△ = 2°11'32"
T = 86.10'
L = 172.18'

ALTERNATIVE B

DESIGNED BY S. Mullangi	DATE 04/06/12	Mohsen Mohseni PROJECT ENGINEER	PLANNING STUDY 2 of 2
DRAWN BY P. Johnson	DATE 04/06/12		NB SR-99 TO WB SR-58 CONNECTOR
CHECKED BY M. Mohseni	DATE 04/06/12		BRIDGE NO. 50-XXXX / CU
APPROVED M. Mohseni	DATE 04/06/12		SCALE: As Noted / EA 06-48460

EC Massey
DESIGN OVERSIGHT
6-22-12
SIGN OFF DATE

ADVANCE PLANNING STUDY SHEET (ENGLISH) (REV. 06-01-09)

FILE => C:\PW_Working\PTGpwiseb\p0038090\dms90794\Alt B NB SR99 TO WB SR58 Conn-GP02.dgn

USERNAME => p0038090 DATE PLOTTED => 4/10/2012 TIME PLOTTED => 12:31:22 PM

PREPARED FOR THE STATE OF CALIFORNIA - DEPARTMENT OF TRANSPORTATION

DIST.	COUNTY	ROUTE	POST MILES TOTAL PROJECT
06	KER	58	T31.7/R55.4

TRIP
900 Truxtun Ave, Suite 200
Bakersfield, CA 93301

PARSONS
2201 DUPONT DRIVE, SUITE 200
IRVINE, CA 92612

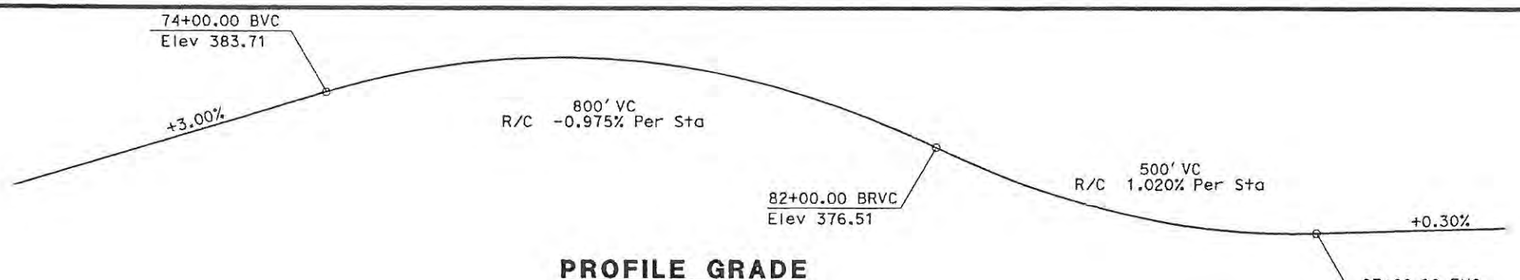

PROFILE GRADE
No Scale

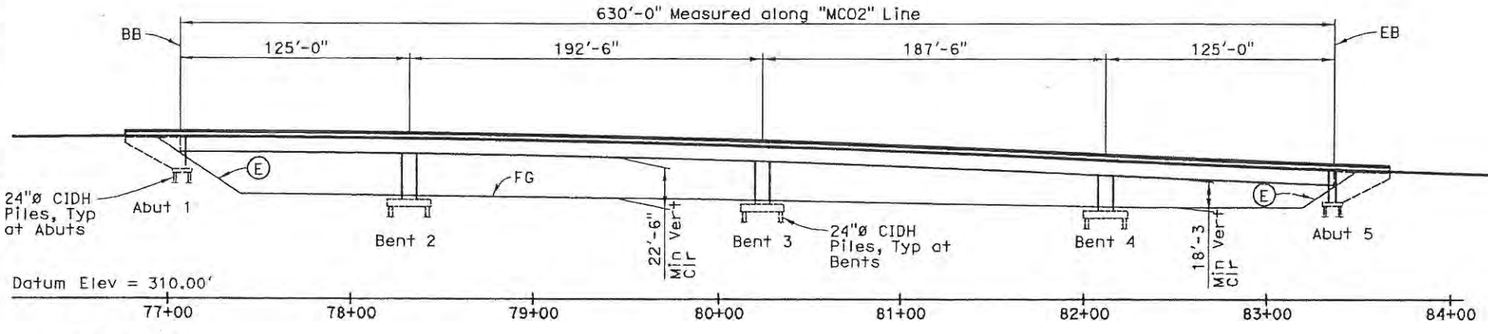

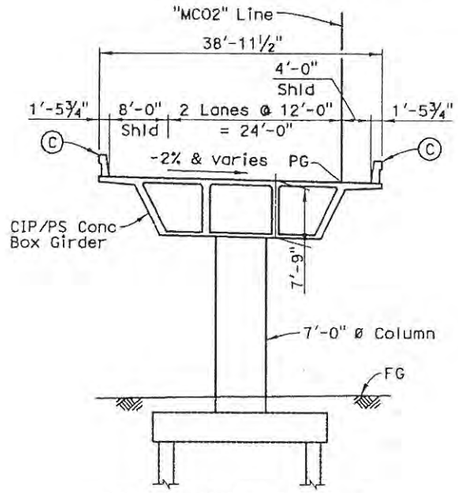

Note: All Piles not Shown.

TYPICAL SECTION
1" = 10'

DATE OF ESTIMATE	= 11/16/11
BRIDGE REMOVAL	= N/A
STRUCTURE DEPTH	= 7'-9"
LENGTH	= 630'-0"
WIDTH	= 38'-11½"
AREA OF WIDENINGS	= 24,545 SF
COST/SF INCLUDING 10% MOBILIZATION & 25% CONTINGENCY	= $ 161
TOTAL COST	= $ 3,950,000

NOTES:

(A) Paint "Ming Avenue Off-Ramp Conn Separation"
(B) Paint "Bridge No. 50-xxxx"
(C) Concrete Barrier Type 736
(D) Structure Approach Type N(30S)
(E) Slope Paving

LEGEND:

⇨ Indicates Direction of Traffic
⌖ Indicates Point of Minimum Vertical Clearance

PILE DATA:

Abuts: 24" CIDH piles
Nominal Resistance = 300 kips
Design Length = 30'-0"

Bents: 24"CIDH piles
Nominal Resistance = 400 kips
Design Length = 35'-0"

ELEVATION
1" = 40'

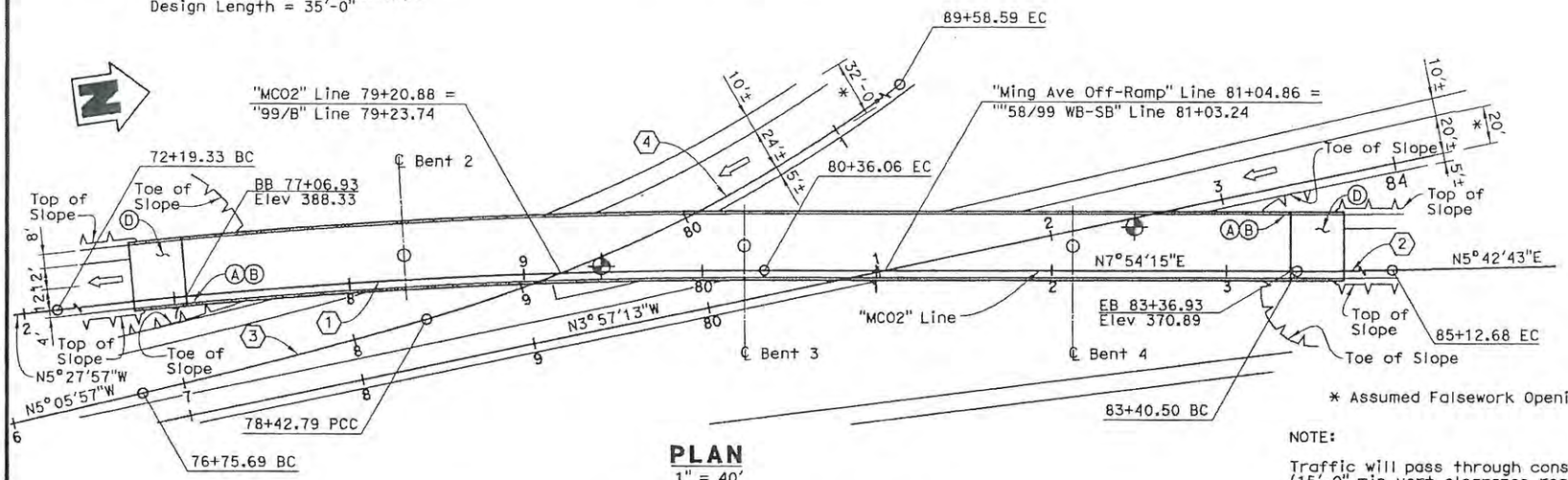

PLAN
1" = 40'

* Assumed Falsework Opening

NOTE:

Traffic will pass through construction. (15'-0" min vert clearance required under falsework)

CURVE DATA (1)	CURVE DATA (2)	CURVE DATA (3)	CURVE DATA (4)
R = 3500.00'	R = 4500.00'	R = 3000.00'	R = 850.00'
Δ = 13°22'12"	Δ = 2°11'32"	Δ = 3°11'29"	Δ = 75°12'48"
T = 410.23'	T = 86.10'	T = 83.57'	T = 654.74'
L = 816.73'	L = 172.18'	L = 167.10'	L = 1115.80'

ALTERNATIVE B

DESIGNED BY	A. Hamza	DATE	11/16/11
DRAWN BY	J. Gilmore	DATE	11/16/11
CHECKED BY	M. Mohseni	DATE	11/16/11
APPROVED	M. Mohseni	DATE	11/16/11

Mohsen Mohseni
PROJECT ENGINEER

PLANNING STUDY

MING AVENUE OFF-RAMP SEPARATION

BRIDGE NO. 50-xxxx	CU
SCALE: As Noted	EA 06-48460

DESIGN OVERSIGHT
6-22-12
SIGN OFF DATE

ADVANCE PLANNING STUDY SHEET (ENGLISH) (REV. 06-01-09)

FILE => $REQUEST

DATE PLOTTED => $DATE
TIME PLOTTED => $TIME
USERNAME => $USER

PREPARED FOR THE STATE OF CALIFORNIA - DEPARTMENT OF TRANSPORTATION

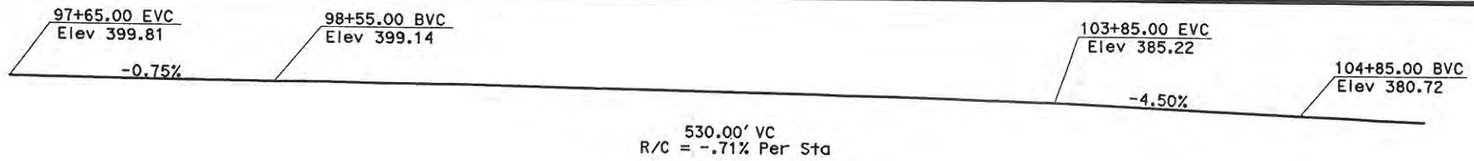

PROFILE GRADE
No Scale

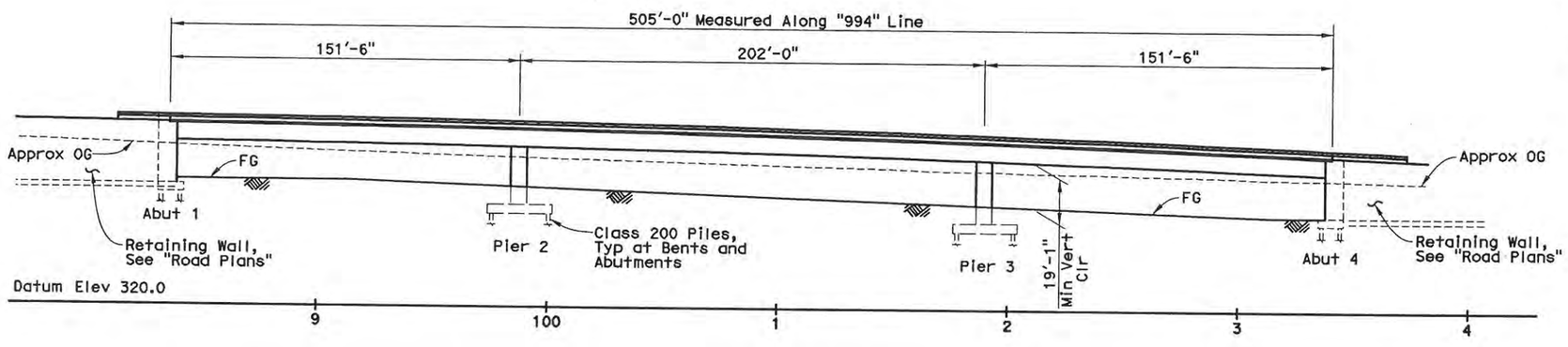

ELEVATION
1" = 30'

Note:

Vehicular traffic will not pass through construction. Falsework will not be required.

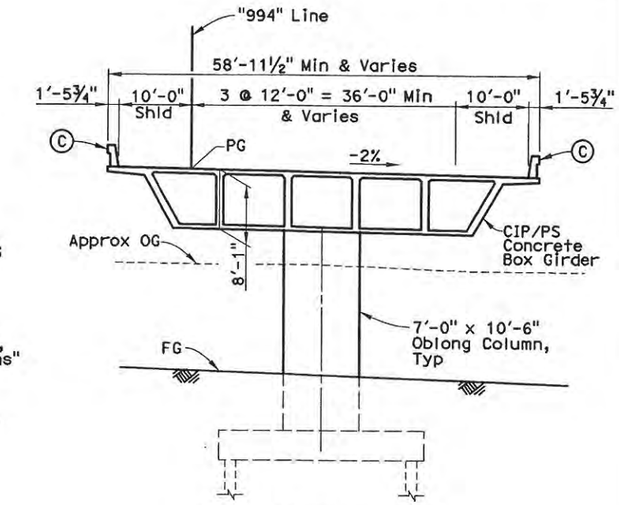

Note: All Piles not Shown.

TYPICAL SECTION
1" = 10'

NOTES

Ⓐ Paint "SR99 To EB58 Connector Separation"
Ⓑ Paint "Br. No. 50-xxxx"
Ⓒ Concrete Barrier Type 736
Ⓓ Structure Approach, Type N(30S)

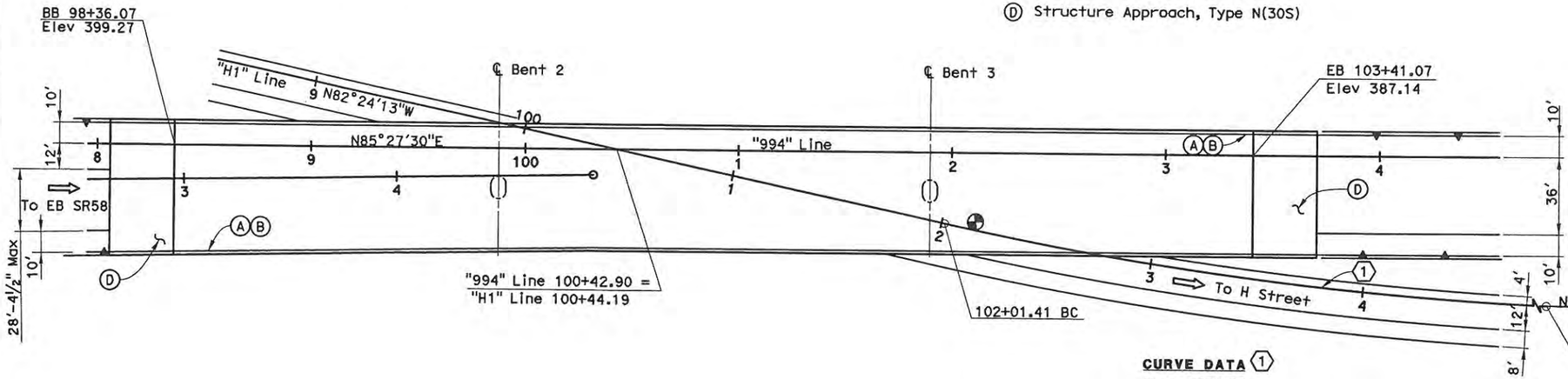

CURVE DATA ①
R = 1700.00
△ = 11°18'36"
T = 168.33'
L = 335.57'

PLAN
1" = 30'

LEGEND

⇨ Indicates Direction of Traffic
⊕ Indicates Point of Minimum Vertical Clearance
—▲— Retaining Wall

DATE OF ESTIMATE	4-06-12
STRUCTURE DEPTH	= 8'-1"
LENGTH	= 505'-0"
WIDTH	= 58'-11½" & Var
AREA	= 28,736 SF
COST/SF INCLUDING 10% MOBILIZATION & 25% CONTINGENCY	= $198/SF
TOTAL COST	= $5,700,000

DIST.	COUNTY	ROUTE	POST MILES TOTAL PROJECT
06	KER		T31.7/R55.6

TRIP
900 Truxtun Ave, Suite 200
Bakersfield, CA 93301

PARSONS
2201 DUPONT DRIVE, SUITE 200
IRVINE, CA 92612

ALTERNATIVE B

PLANNING STUDY

SR99 TO EB58 CONNECTOR SEPARATION

DESIGNED BY	J. Fix	DATE	4/06/12
DRAWN BY	J. Gilmore	DATE	4/06/12
CHECKED BY	M. Mohseni	DATE	4/06/12
APPROVED	M. Mohseni	DATE	4/06/12

Mohsen Mohseni
PROJECT ENGINEER

BRIDGE NO. 50-xxxx | CU
SCALE: As Noted | EA 06-48460

DESIGN OVERSIGHT
6-22-12
SIGN OFF DATE

ADVANCE PLANNING STUDY SHEET (ENGLISH) (REV. 06-01-09)

FILE => H:\646593_CENTENNIAL\SHT\STRUCTURES\APS\Sr99_EB58 Conn Sep H St\Alt B\55-xxx-a-gp01.dgn

DATE PLOTTED => 4/5/2012 TIME PLOTTED => 1:49:26 PM
USERNAME => 36671

PREPARED FOR THE STATE OF CALIFORNIA - DEPARTMENT OF TRANSPORTATION

DIST.	COUNTY	ROUTE	POST MILES TOTAL PROJECT
06	KER	58	T52.36/R55.4

TRIP
900 Truxtun Ave, Suite 200
Bakersfield, CA 93301

PARSONS
2201 DUPONT DRIVE, SUITE 200
IRVINE, CA 92612

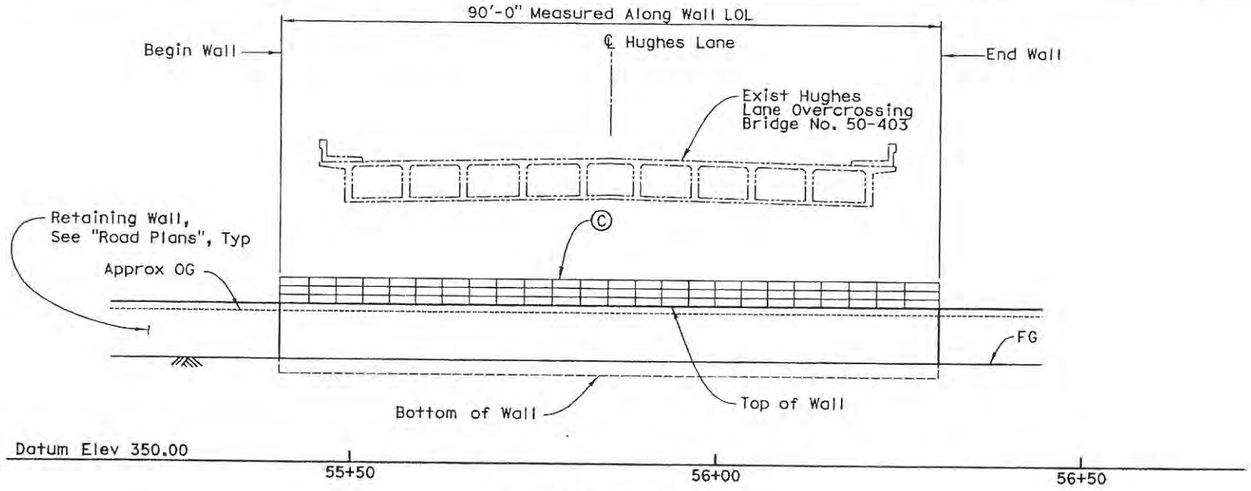

ELEVATION A-A
1" = 10'

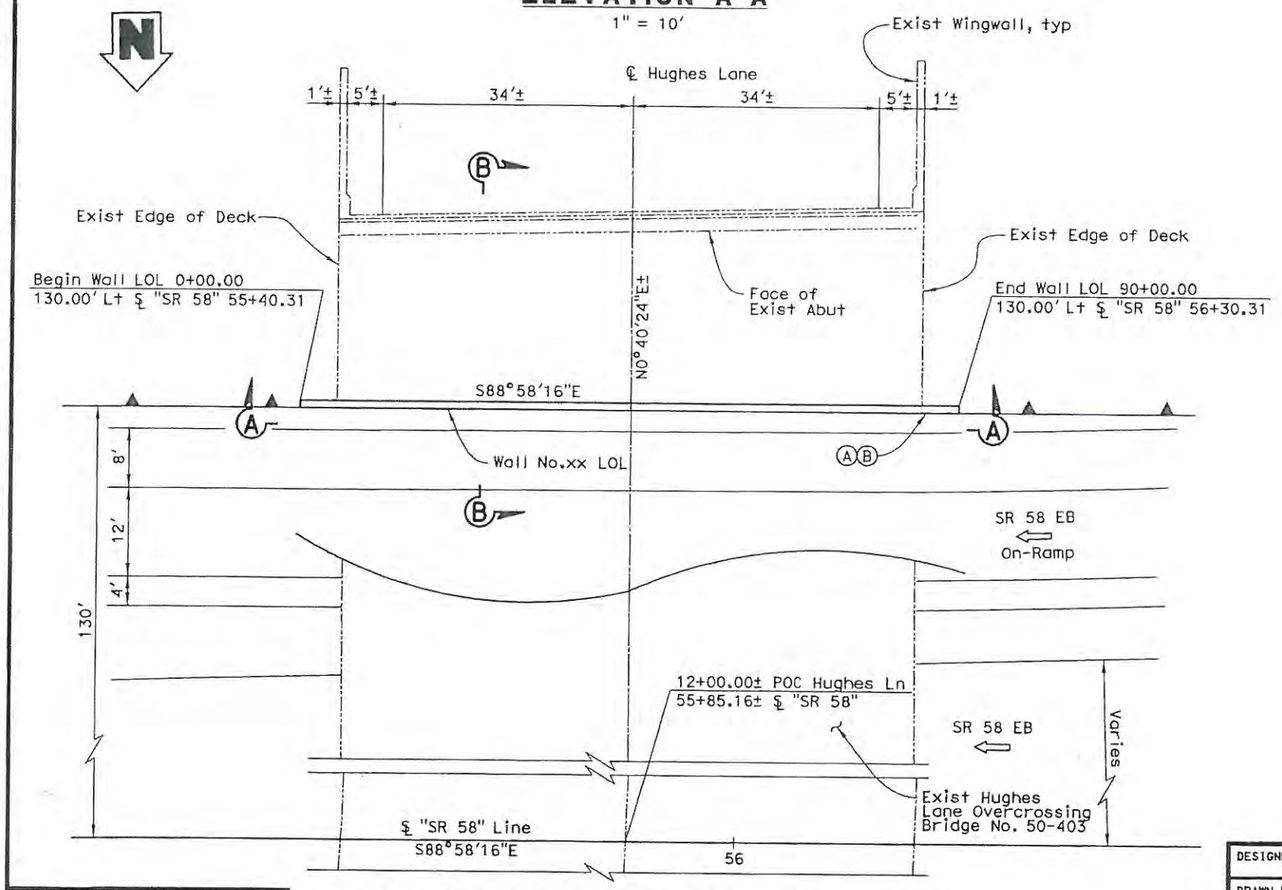

Note: Portion of bridge superstructure not shown for clarity.

PLAN
1" = 10'

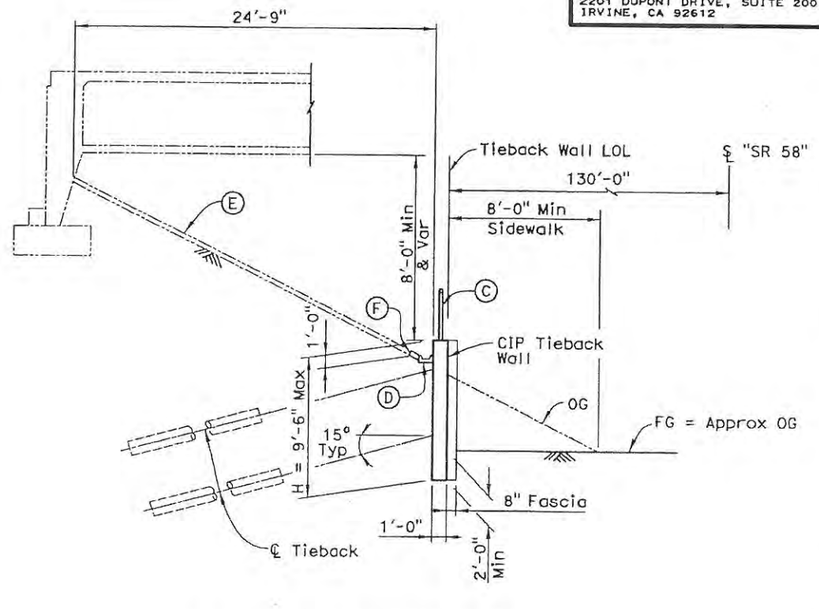

TYPICAL SECTION B-B
1" = 5'

NOTES

(A) Paint "RW No. xx"
(B) Paint "Br. No. 50-xxx"
(C) 3'-6" Cable Railing
(D) FL Gutter
(E) Exist Slope Paving
(F) Remove and replace portion of Exist slope paving

LEGEND

------ Indicates Existing Bridge
⇨ Indicates Direction of Traffic
—▲— Retaining Wall

DATE OF ESTIMATE	11-16-11
BRIDGE REMOVAL	= N/A
STRUCTURE DEPTH	= N/A
LENGTH	= 90'-0"
HEIGHT	= 9'-6"
AREA	= 855 SF
COST/SF INCLUDING 10% MOBILIZATION & 25% CONTINGENCY BRIDGE REMOVAL	= $281/SF
TOTAL COST	= $240,000

BZ Massey
DESIGN OVERSIGHT
12-22-12
SIGN OFF DATE

DESIGNED BY	A. Hamza	DATE	11/16/11
DRAWN BY	A. Segura	DATE	11/16/11
CHECKED BY	M. Mohseni	DATE	11/16/11
APPROVED	M. Mohseni	DATE	11/16/11

Mohsen Mohseni
PROJECT ENGINEER

ALTERNATIVE B

PLANNING STUDY

HUGHES LANE OVERCROSSING EB SR-58 WALL NO. XX

BRIDGE NO. 50-xxx	CU
SCALE: As Noted	EA 06-48460

ADVANCE PLANNING STUDY SHEET (ENGLISH) (REV. 06-01-09)

FILE => $REQUEST

USERNAME => $USER DATE PLOTTED => $DATE TIME PLOTTED => $TIME

PREPARED FOR THE STATE OF CALIFORNIA - DEPARTMENT OF TRANSPORTATION

DIST.	COUNTY	ROUTE	POST MILES TOTAL PROJECT
06	KER	58	33.1/55.4

TRIP
900 Truxtun Ave, Suite 200
Bakersfield, CA 93301

PARSONS
2201 DUPONT DRIVE, SUITE 200
IRVINE, CA 92612

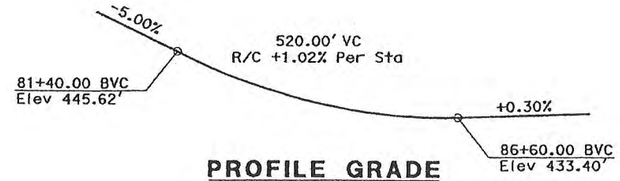

PROFILE GRADE
No Scale

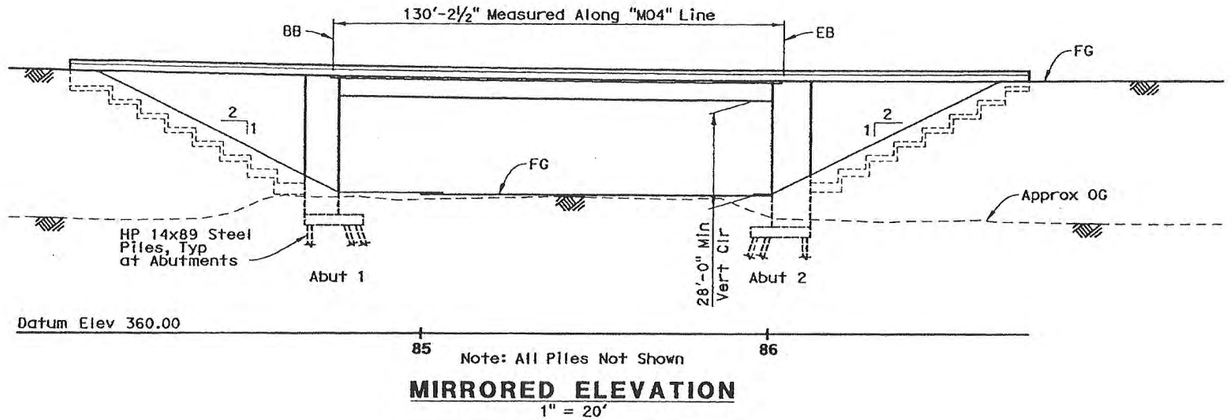

MIRRORED ELEVATION
1" = 20'

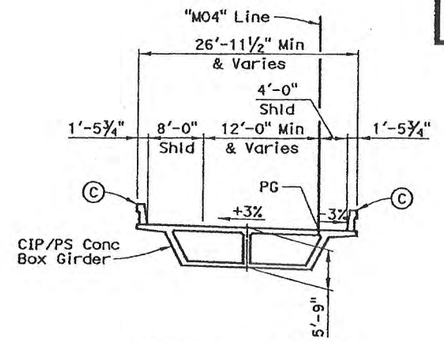

TYPICAL SECTION
1" = 10'

DATE OF ESTIMATE	10-25-11
BRIDGE REMOVAL	= N/A
STRUCTURE DEPTH	= 5'-9"
LENGTH	= 130'-2½"
WIDTH	= 26'-11½" Min & Varies
AREA	= 3677 SF
COST/SF INCLUDING 10% MOBILIZATION & 25% CONTINGENCY	= $ 479/SF
TOTAL COST	= $ 1,760,000

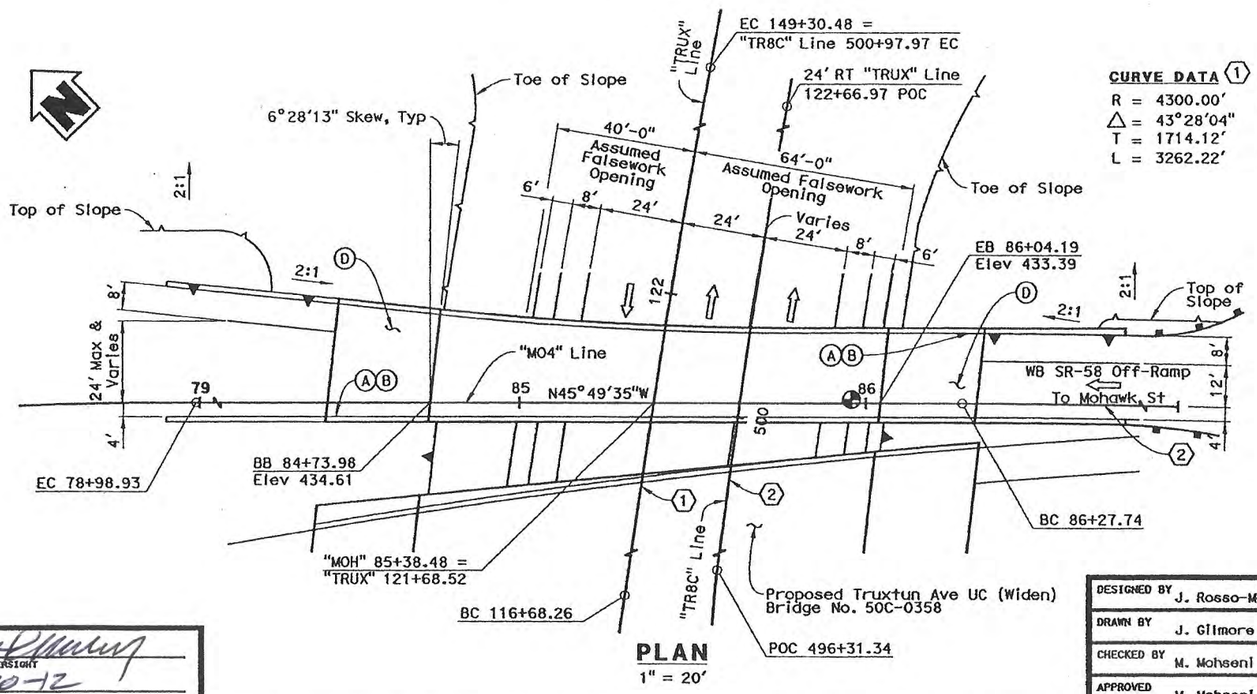

PLAN
1" = 20'

CURVE DATA 1	CURVE DATA 2	CURVE DATA 3
R = 4300.00'	R = 2830.00'	R = 2405.00'
△ = 43°28'04"	△ = 9°26'50"	△ = 6°29'11"
T = 1714.12'	T = 233.84'	T = 136.28'
L = 3262.22'	L = 466.52'	L = 272.26'

Note:
Traffic will Pass Through Construction Site, 15'-0" Minimum Vertical Clearance Required Under Falsework.

NOTES:
- (A) Paint "WB SR-58 Off-Ramp UC"
- (B) Paint "Bridge No. 50-xxxx"
- (C) Concrete Barrier Type 736
- (D) Structure Approach Type N(30S)

LEGEND:
- Indicates Direction of Traffic
- Indicates Point of Minimum Vertical Clearance
- Indicates Retaining Wall
- Indicates MBGR

ALTERNATIVE B

DESIGN OVERSIGHT
7-20-12
SIGN OFF DATE

DESIGNED BY	J. Rosso-Mountin	DATE	10/11/11
DRAWN BY	J. Gilmore	DATE	10/12/11
CHECKED BY	M. Mohseni	DATE	10/20/11
APPROVED	M. Mohseni	DATE	10/26/11

Mohsen Mohseni
PROJECT ENGINEER

PLANNING STUDY

WB SR-58 OFF-RAMP (TRUXTUN AVE) UC

BRIDGE NO. 50-XXXX		CU	
SCALE: As Noted		EA	06-48460

ADVANCE PLANNING STUDY SHEET (ENGLISH) (REV. 06-01-09)

FILE => $REQUEST

DATE PLOTTED => $DATE TIME PLOTTED => $TIME USERNAME => #USER

PREPARED FOR THE STATE OF CALIFORNIA - DEPARTMENT OF TRANSPORTATION

DIST.	COUNTY	ROUTE	POST MILES TOTAL PROJECT
06	KER	58	33.1/55.4

TRIP
900 Truxtun Ave, Suite 200
Bakersfield, CA 93301

PARSONS
2201 DUPONT DRIVE, SUITE 200
IRVINE, CA 92612

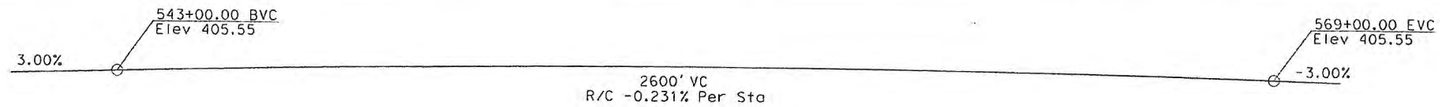

PROFILE GRADE
NO SCALE

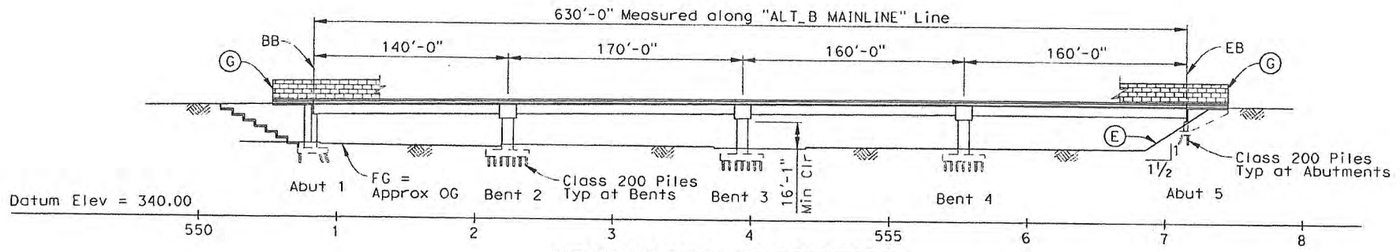

DEVELOPED ELEVATION
1" = 50'

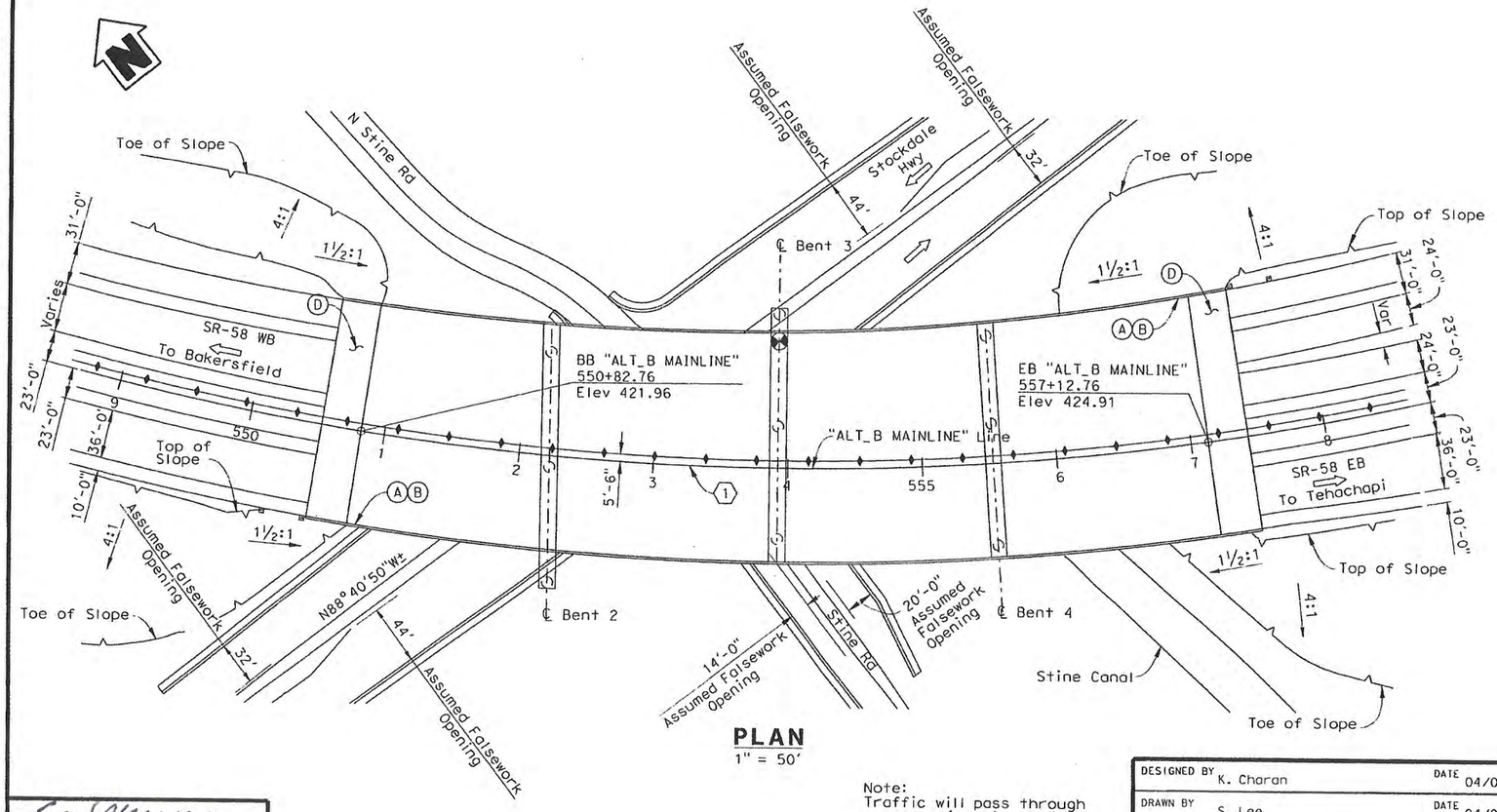

PLAN
1" = 50'

DATE OF ESTIMATE	= 04/06/12
STRUCTURE DEPTH	= 7'-0"
LENGTH	= 630'-0"
WIDTH	= Min 166'-2" to Max 180'-7"
AREA	= 33,154 SF
COST/SF INCLUDING 10% MOBILIZATION & 25% CONTINGENCY	= 209/SF
TOTAL COST	= $ 22,780,000

NOTES:

- (A) Paint "Stockdale Highway Undercrossing"
- (B) Paint "Bridge No. 50-XXXXR/L"
- (C) Concrete Barrier Type 736
- (D) Structure Approach Type N(30S)
- (E) Slope Paving
- (F) Concrete Barrier Type 736S
- (G) Soundwall H = 10' Min to 14' max

LEGEND:

- Indicates Direction of Traffic
- Indicates Point of Mininmum Vertical Clearance
- MBGR
- Indicate Conc Barrier (Type 60A)

CURVE DATA (1)

R = 2100.00'
Δ = 73°26'39"
T = 1566.55'
L = 2691.87'

Note:
Traffic will pass through construction site, 15'-0" minimum vertical clearance required under falsework.

DESIGN OVERSIGHT
7-20-12
SIGN OFF DATE

ADVANCE PLANNING STUDY SHEET (ENGLISH) (REV. 06-01-09)

DESIGNED BY	K. Charan	DATE	04/06/12
DRAWN BY	S. Lee	DATE	04/06/12
CHECKED BY	R. Mathur	DATE	04/06/12
APPROVED	M. Mohseni	DATE	04/06/12

Mohsen Mohseni
PROJECT ENGINEER

ALTERNATIVE B
PLANNING STUDY (SHEET NO. 1)
STOCKDALE HWY UC

BRIDGE NO.	50-XXXXR/L	CU	
SCALE:	As Noted	EA	06-48460

FILE => C:\PW_Working\PTGpwiseb\p0038090\dms90794\Alt B Stockdale HWY-CP01.dgn

USERNAME => p0038090 DATE PLOTTED => 4/10/2012 TIME PLOTTED => 12:16:48 PM

PREPARED FOR THE STATE OF CALIFORNIA - DEPARTMENT OF TRANSPORTATION

DIST.	COUNTY	ROUTE	POST MILES TOTAL PROJECT
06	KER	58	33.1/55.4

TRIP
900 Truxtun Ave. Suite 200
Bakersfield, CA 93301

PARSONS
2201 DUPONT DRIVE, SUITE 200
IRVINE, CA 92612

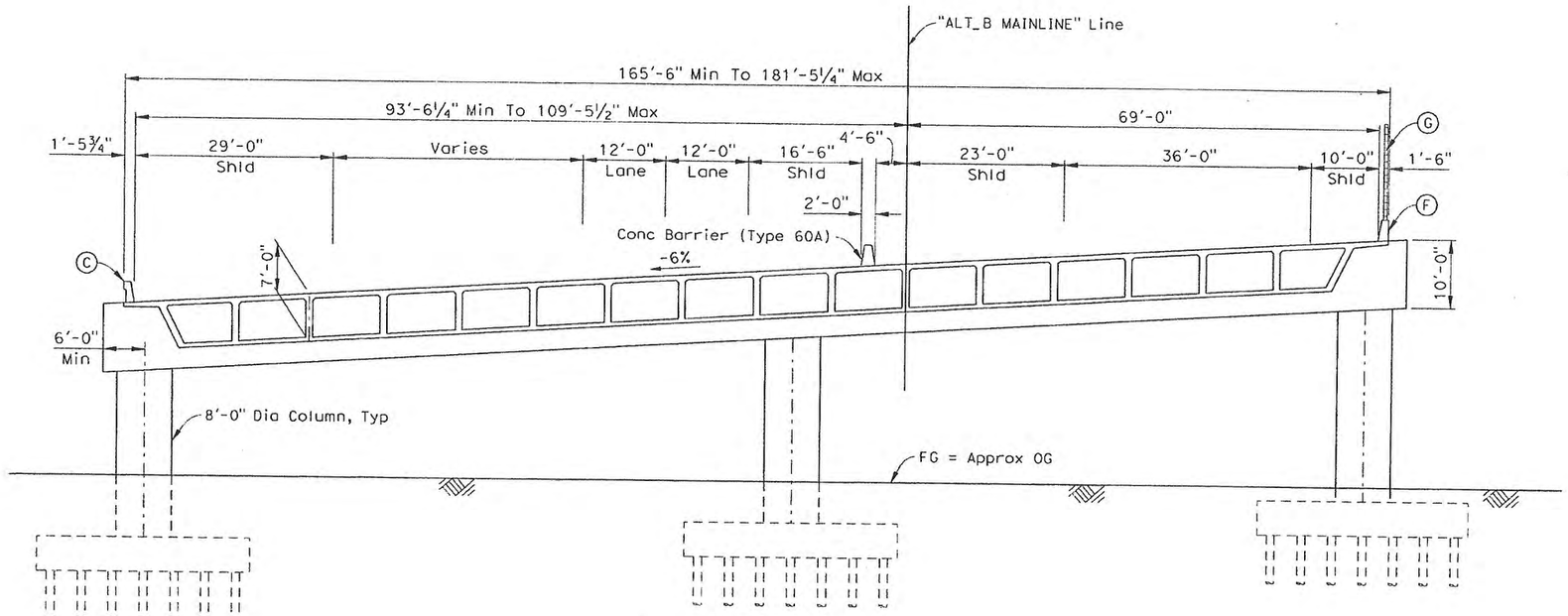

TYPICAL SECTION

1" = 10'

Note: All Piles are not shown

For Legend, see Planning Study (Sheet No. 1)

ALTERNATIVE B

DESIGNED BY	K. Charan	DATE	04/06/12
DRAWN BY	S. Lee	DATE	04/06/12
CHECKED BY	R. Mathur	DATE	04/06/12
APPROVED	M. Mohseni	DATE	04/06/12

Mohsen Mohseni
PROJECT ENGINEER

PLANNING STUDY (SHEET NO. 2)

STOCKDALE HWY UC

BRIDGE NO.	50-XXXXR/L	CU	
SCALE:	As Noted	EA	06-48460

DESIGN OVERSIGHT
7-20-12
SIGN OFF DATE

ADVANCE PLANNING STUDY SHEET (ENGLISH) (REV. 06-01-09)

FILE => C:\PW_Working\PTCpwiseb\p0038090\dms90794\Alt B Stockdale HWY-Sect.dgn

USERNAME => p0038090 DATE PLOTTED => 4/10/2012 TIME PLOTTED => 12:34:08 PM

PREPARED FOR THE STATE OF CALIFORNIA - DEPARTMENT OF TRANSPORTATION

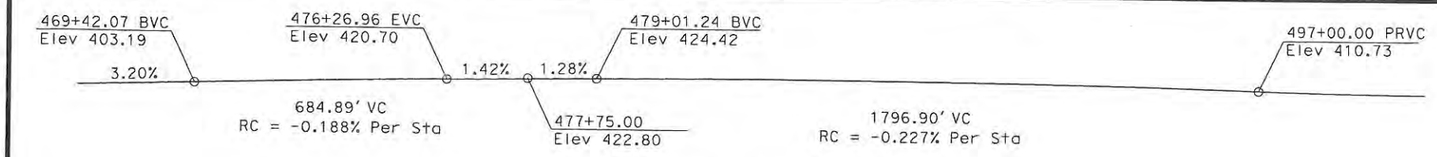

PROFILE GRADE
No Scale

LEGEND

- Indicates Direction of Traffic
- Indicates Point of Minimum Vertical Clearance
- Indicates Direction of Flow
- Water Surface Elevation (WSE) at Bridge for 100 year design flood = 393.74 average mean sea level

DIST.	COUNTY	ROUTE	POST MILES TOTAL PROJECT
06	KER	58	33.1/55.4

TRIP
900 Truxtun Ave, Suite 200
Bakersfield, CA 93301

PARSONS
2201 DUPONT DRIVE, SUITE 200
IRVINE, CA 92612

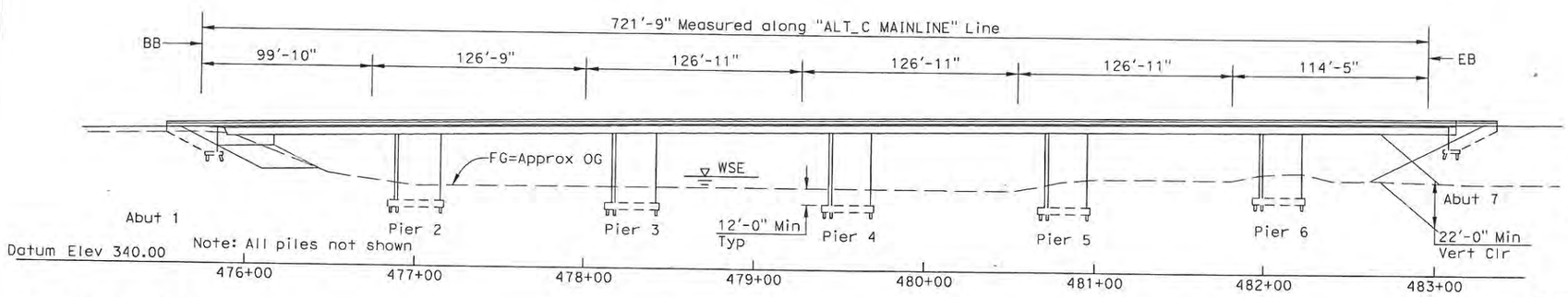

DEVELOPED ELEVATION
1" = 40'

FOUNDATION NOTES:

Abuts: Class 140 Piles
Design Loading 140 kips @ service
Design Length = 50'-0"

Piers: Class 200 Piles
Design Loading 400 kips @ Nominal
Design Length = 55'-0"

Note:
Falsework erection and Bridge construction to take place during dry season.

HYDROLOGIC SUMMARY

	DESIGN FLOOD
Frequency (years)	100 YR
Discharge (cubic feet per second)	15,000
Water Surface (Elevation at bridge)	393.74

Flood plain data are based upon Preliminary Bridge Hydraulics Report available when the plans are prepared and are shown to meet Federal Requirements.

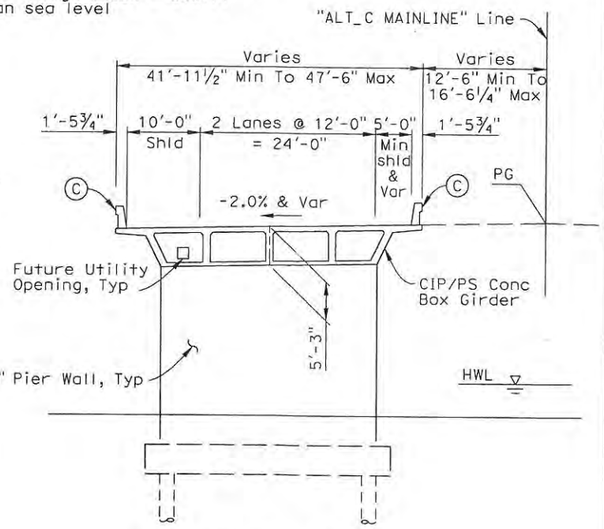

Note: All piles not shown

TYPICAL SECTION
(Looking Upstation)
1" = 10'

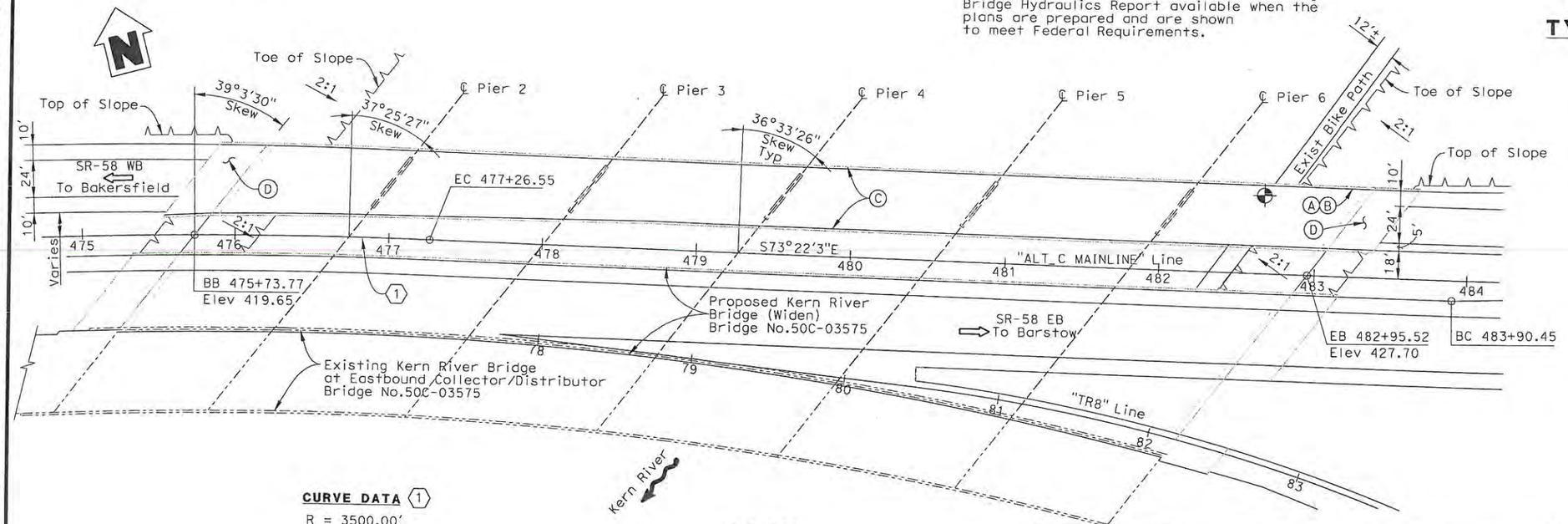

CURVE DATA (1)
R = 3500.00'
Δ = 43°41'37"
T = 1403.22'
L = 2669.09'

PLAN
1" = 40'

DESIGNED BY	E. Mobo	DATE	4/06/12
DRAWN BY	S. Lee	DATE	4/06/12
CHECKED BY	R. Mathur	DATE	4/06/12
APPROVED	M. Mohseni	DATE	4/06/12

Mohsen Mohseni
PROJECT ENGINEER

DATE OF ESTIMATE	4-06-12
BRIDGE REMOVAL	= N/A
STRUCTURE DEPTH	= 5'-3"
LENGTH	= 721'-9"
WIDTH	= 44'-9" (Avg)
AREA	= 32,298 SF
COST/SF INCLUDING 10% MOBILIZATION & 25% CONTINGENCY	= $157/SF
TOTAL COST	= $5,070,000

NOTES:

(A) Paint "Kern River Bridge"
(B) Paint "Bridge No. 50-xxxx"
(C) Concrete Barrier Type 736
(D) Structure Approach, Type N(30S)

ALTERNATIVE C

PLANNING STUDY

KERN RIVER BRIDGE

BRIDGE NO. 50-xxxx	CU
SCALE: As Noted	EA 06-48460

DESIGN OVERSIGHT
6-22-12
SIGN OFF DATE

ADVANCE PLANNING STUDY SHEET (ENGLISH) (REV. 06-01-09)

FILE => C:\PW_Working\PTGpwlsob\p0038090\dms90794\Alt C Kern River Bridge-GP01.dgn

USERNAME => p0038090 DATE PLOTTED => 4/6/2012 TIME PLOTTED => 10:42:15 AM

PREPARED FOR THE STATE OF CALIFORNIA - DEPARTMENT OF TRANSPORTATION

DIST.	COUNTY	ROUTE	POST MILES TOTAL PROJECT
06	KER	58	T31.7/R55.6

TRIP
900 Truxtun Ave, Suite 200
Bakersfield, CA 93301

PARSONS
2201 DUPONT DRIVE, SUITE 200
IRVINE, CA 92612

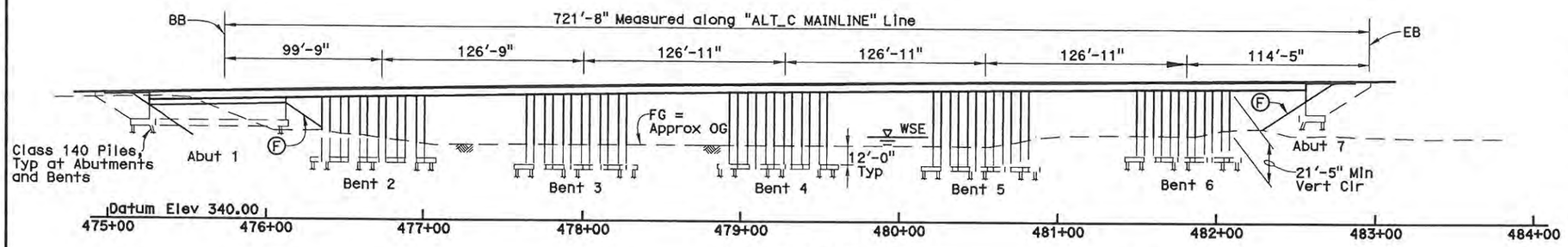

ELEVATION
1" = 40'

Notes:

1. Falsework erection and Bridge construction to take place during dry season.
2. Traffic will pass through construction site.
3. False work opening required for bike path.

NOTES:

Ⓐ Paint "Westside Parkway Bridge (Widen)"
Ⓑ Paint "Bridge No. 50C-0357S"
Ⓒ Concrete Barrier Type 736
Ⓓ Structure Approach, Type N(30S)
Ⓔ Structure Approach, Type R(30S)
Ⓕ Full Slope Paving
Ⓖ Chain Link Fence
Ⓗ Temporary Railing Type K

LEGEND

- Indicates Direction of Traffic
- Indicates Point of Minimum Vertical Clearance
- Indicates Direction of Flow
- Water Surface Elevation (WSE) at Bridge for 100 year design flood = 393.74 average mean sea level
- Bridge Removal
- Closure Pour
- Indicates Existing Bridge
- Indicates Proposed Bridge

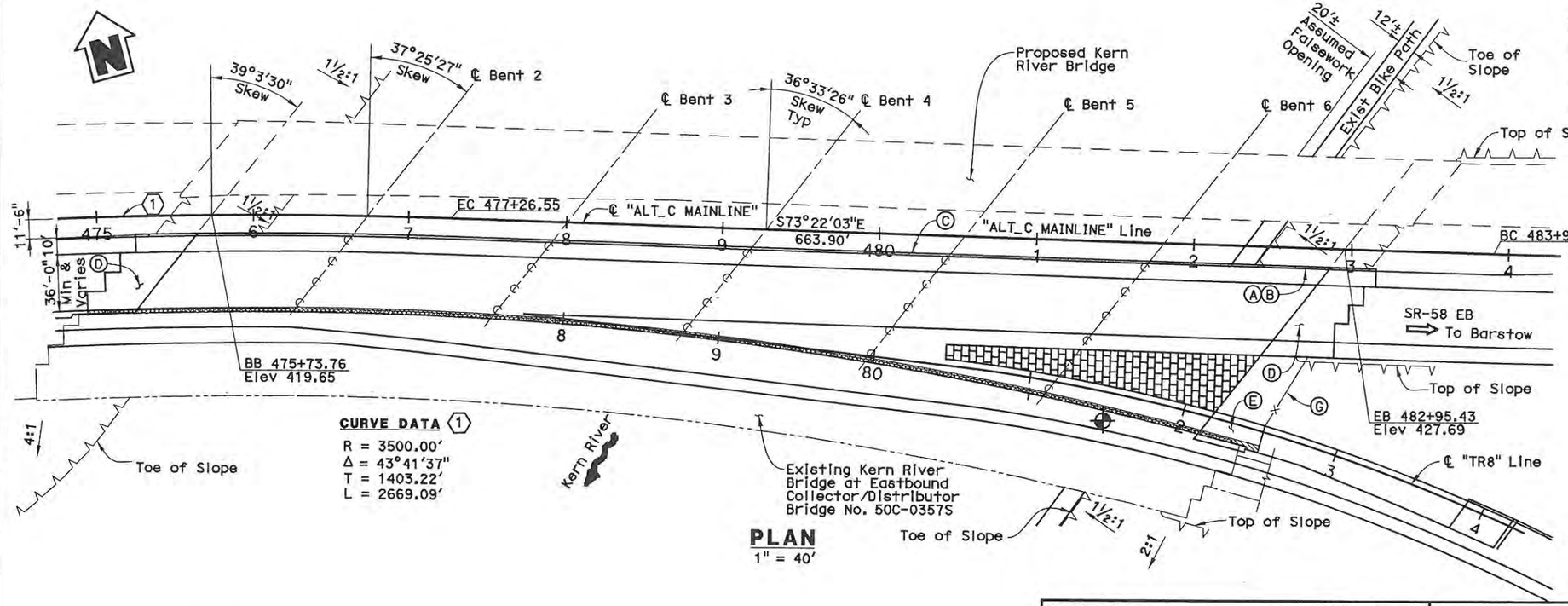

PLAN
1" = 40'

DATE OF ESTIMATE	4-5-12
BRIDGE REMOVAL	= 2,165 SF
STRUCTURE DEPTH	= 5'-3"
LENGTH	= 721'-8"
WIDTH	= 51' Min & Varies
AREA	= 48,260 SF
COST/SF INCLUDING 10% MOBILIZATION & 25% CONTINGENCY	= $242/SF
TOTAL COST	= $11,700,000

ALTERNATIVE C

DESIGNED BY	J. Rudolph	DATE	3/19/12
DRAWN BY	O. Sandoval	DATE	3/20/12
CHECKED BY	C. Roberts	DATE	3/26/12
APPROVED	M. Mohseni	DATE	4/06/12

Mohsen Mohseni
PROJECT ENGINEER

PLANNING STUDY No. 1

WESTSIDE PARKWAY BRIDGE (WIDEN)

BRIDGE NO. 50C-0357S	CU
SCALE: As Noted	EA 06-48460

BZ Mesrey
DESIGN OVERSIGHT
6-22-12
SIGN OFF DATE

ADVANCE PLANNING STUDY SHEET (ENGLISH) (REV. 06-01-06)

FILE => c:\pw_working\ptgpwiseb\36671\dms92079\xxxxxx_gp01APS.dgn

USERNAME => 36671 DATE PLOTTED => 4/6/2012 TIME PLOTTED => 2:03:12 PM

PREPARED FOR THE STATE OF CALIFORNIA - DEPARTMENT OF TRANSPORTATION

DIST.	COUNTY	ROUTE	POST MILES TOTAL PROJECT
06	KER	58	T31.7/R55.6

TRIP
900 Truxtun Ave, Suite 200
Bakersfield, CA 93301

PARSONS
2201 DUPONT DRIVE, SUITE 200
IRVINE, CA 92612

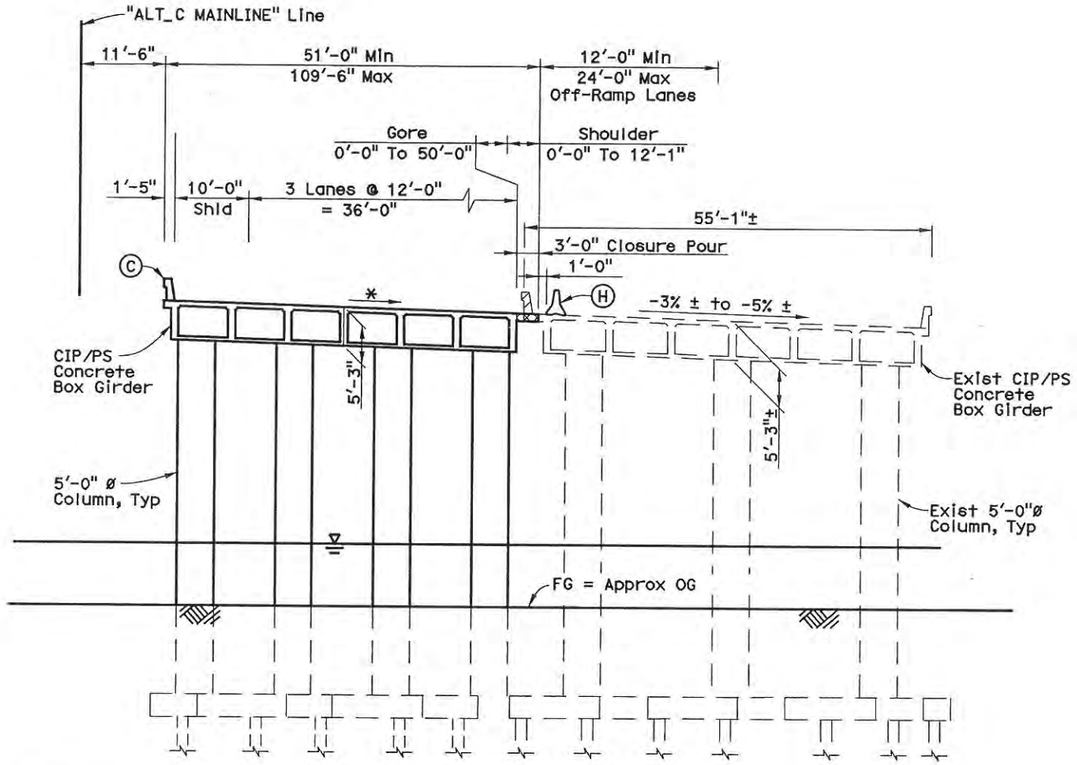

* Match Existing Cross Slope
Note: Not All Piles Shown.

TYPICAL SECTION
1" = 10'

HYDROLOGIC SUMMARY

	DESIGN FLOOD
Frequency (years)	100 YR
Discharge (cubic feet per second)	15,000
Water Surface (Elevation at bridge)	393.74

Flood plain data are based upon Preliminary Bridge Hydraulics Report available when the plans are prepared and are shown to meet Federal Requirements.

NOTES:

1. For Notes, see "Planning Study No. 1" sheet.

ALTERNATIVE C

DESIGNED BY J. Rudolph	DATE 3/19/12	Mohsen Mohseni PROJECT ENGINEER	**PLANNING STUDY No. 2**
DRAWN BY O. Sandoval	DATE 3/20/12		**WESTSIDE PARKWAY BRIDGE (WIDEN)**
CHECKED BY C. Roberts	DATE 3/26/12		BRIDGE NO. 50C-0357S / CU
APPROVED M. Mohseni	DATE 4/06/12		SCALE: As Noted / EA 06-48460

R E Massey
DESIGN OVERSIGHT
6-22-12
SIGN OFF DATE

ADVANCE PLANNING STUDY SHEET (ENGLISH) (REV. 08-01-09)

FILE => c:\pw_working\ptgpwiseb\36671\dms92079\xxxxxx-gp02APS.dgn

USERNAME => 36671 DATE PLOTTED => 4/6/2012 TIME PLOTTED => 2:05:37 PM

PREPARED FOR THE STATE OF CALIFORNIA - DEPARTMENT OF TRANSPORTATION

DIST.	COUNTY	ROUTE	POST MILES TOTAL PROJECT
06	KER	58	33.1/55.4

TRIP
900 Truxtun Ave. Suite 200
Bakersfield, CA 93301

PARSONS
2201 DUPONT DRIVE, SUITE 200
IRVINE, CA 92612

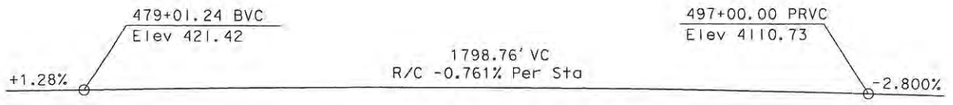

PROFILE GRADE
No Scale

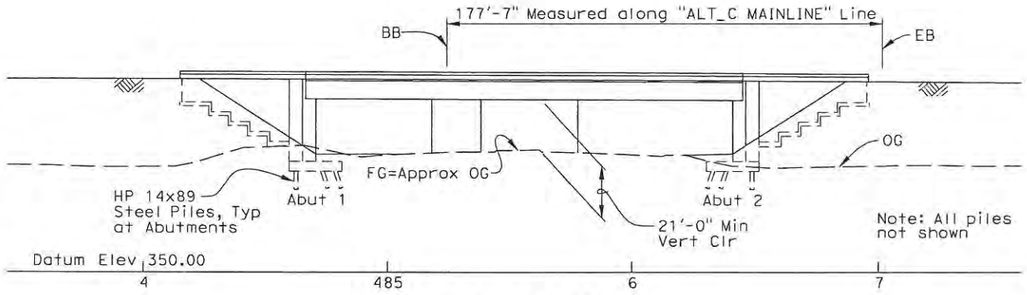

ELEVATION
1" = 30'

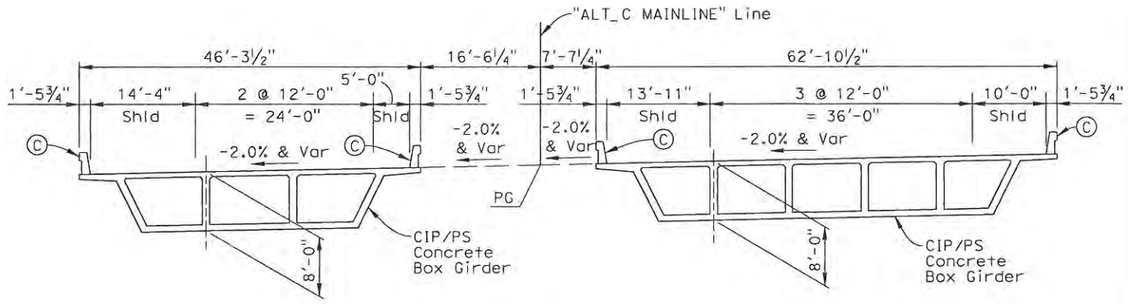

TYPICAL SECTION
1" = 10'

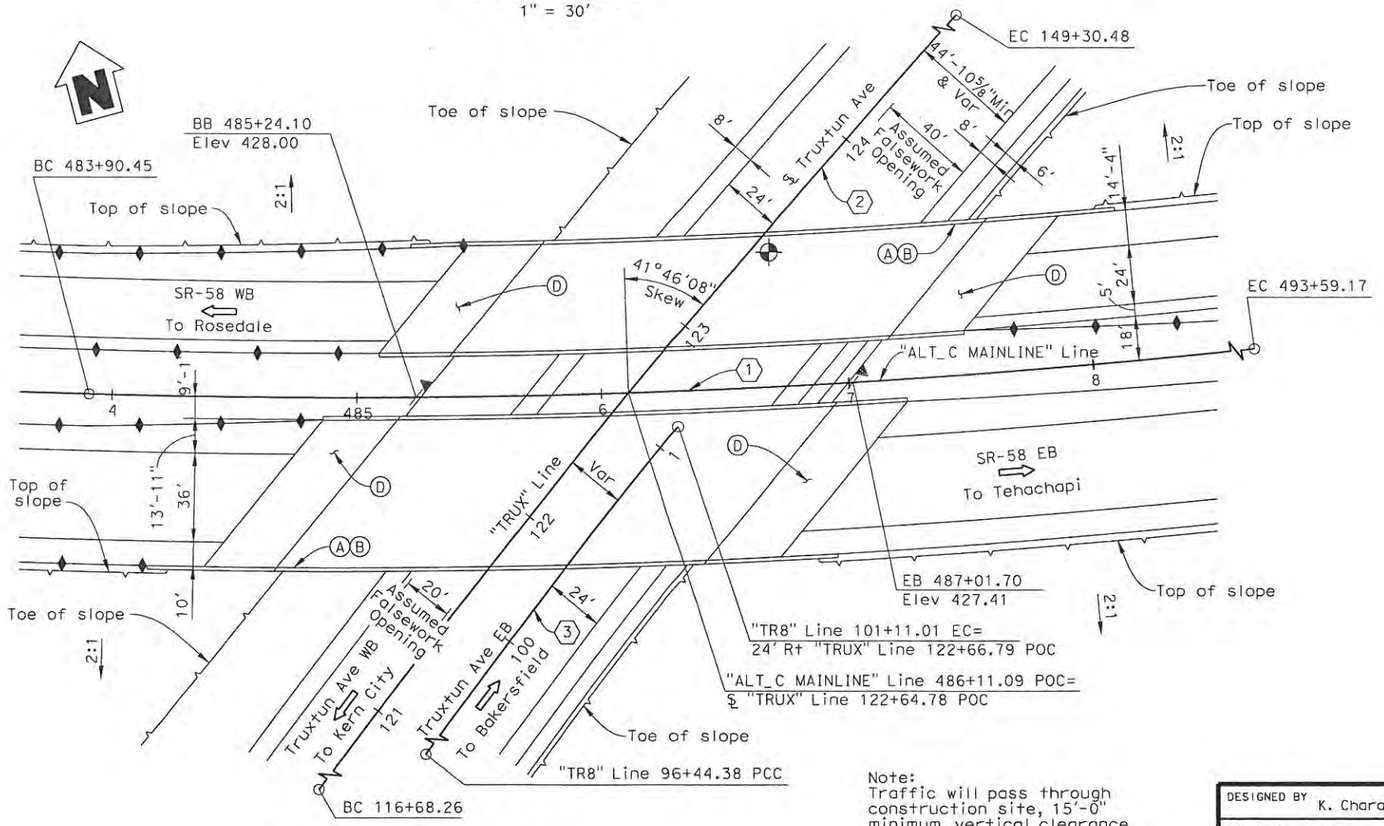

PLAN
1" = 30'

Note:
Traffic will pass through construction site, 15'-0" minimum vertical clearance required under falsework

NOTES

(A) Paint "Truxtun Ave UC"
(B) Paint "Br. No. 50-xxxx"
(C) Concrete Barrier Type 736
(D) Structure Approach, Type N(30S)

CURVE DATA (1)
R = 3500.00'
Δ = 15°51'30"
T = 487.48'
L = 968.72'

CURVE DATA (2)
R = 4300.00'
Δ = 43°28'04"
T = 1714.12'
L = 3262.22'

CURVE DATA (3)
R = 2830.00'
Δ = 9°26'50"
T = 233.84'
L = 466.62'

DATE OF ESTIMATE	3-26-11
BRIDGE REMOVAL	= N/A
STRUCTURE DEPTH	= 8'-0"
LENGTH	= 177'-7"
WIDTH	= 109'-2"
AREA	= 19,386 SF
COST/SF INCLUDING 10% MOBILIZATION & 25% CONTINGENCY	= $302/SF
TOTAL COST	= $5,860,000

LEGEND

⇨ Indicates Direction of Traffic
Indicates Point of Minimum Vertical Clearance
Concrete Barrier Type 60
Retaining Wall

ALTERNATIVE C

DESIGNED BY	K. Charan	DATE	3/26/12
DRAWN BY	A. MacDonald	DATE	3/26/12
CHECKED BY	R. Mathur	DATE	3/26/12
APPROVED	M. Mohensi	DATE	3/26/12

Mohsen Mohseni
PROJECT ENGINEER

PLANNING STUDY
TRUXTUN AVENUE UC

BRIDGE NO. 50-XXXX	CU
SCALE: As Noted	EA 06-48460

BC Massey
DESIGN OVERSIGHT
6-22-12
SIGN OFF DATE

ADVANCE PLANNING STUDY SHEET (ENGLISH) (REV. 06-01-09)

FILE => C:\PW_WORKING\PtgpWIseb\p0038090\dms90794\Alt C Truxtun AVE-GP01.dgn

USERNAME => p0038090 DATE PLOTTED => 3/28/2012 TIME PLOTTED => 12:10:44 PM

PREPARED FOR THE STATE OF CALIFORNIA - DEPARTMENT OF TRANSPORTATION

DIST.	COUNTY	ROUTE	POST MILES TOTAL PROJECT
06	KER	58	33.1/55.4

TRIP
900 Truxtun Ave, Suite 200
Bakersfield, CA 93301

PARSONS
2201 DUPONT DRIVE, SUITE 200
IRVINE, CA 92612

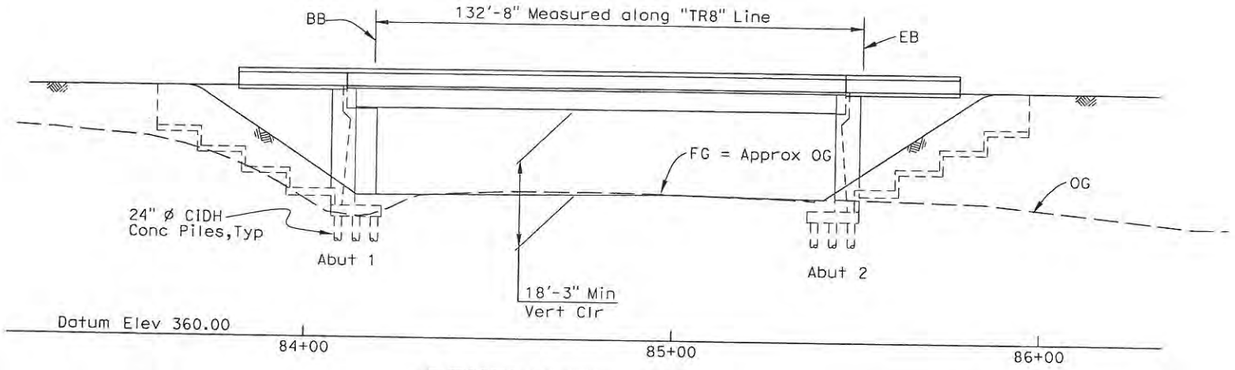

DEVELOPED ELEVATION
1" = 20'

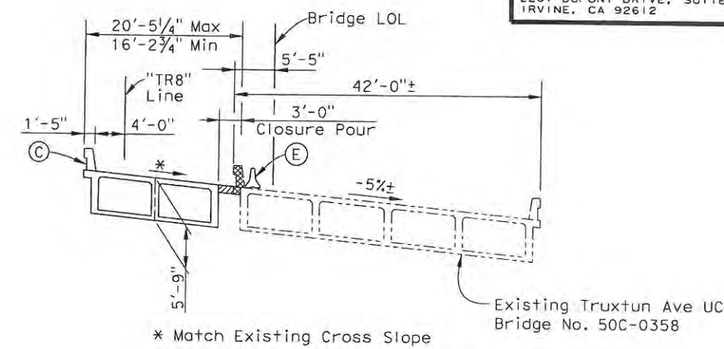

* Match Existing Cross Slope

TYPICAL SECTION
1" = 10'

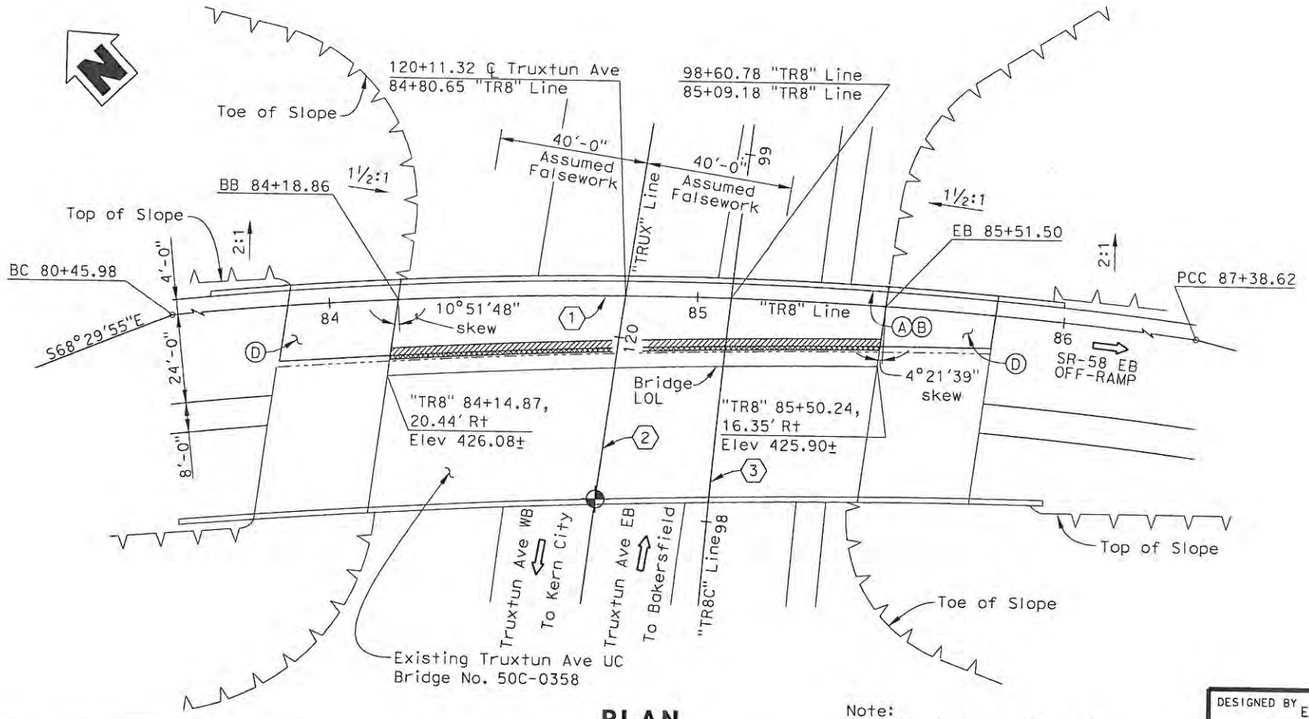

PLAN
1" = 20'

Note:
Traffic will pass through construction site, 15'-0" minimum vertical clearance required under falsework

DATE OF ESTIMATE	3-26-12
BRIDGE REMOVAL	= 400 SF
STRUCTURE DEPTH	= 5'-9"
LENGTH	= 132'-8"
WIDTH	= 16'-2¾" Min & Var
AREA	= 2,432 SF
COST/SF INCLUDING 10% MOBILIZATION & 25% CONTINGENCY	= $366/SF
BRIDGE REMOVAL	= $10,000
TOTAL COST	= $890,000

LEGEND

- Indicates Direction of Traffic
- Indicates Point of Minimum Vertical Clearance
- Indicates Existing Structure
- Indicates Closure Pour
- Indicates Bridge Removal

NOTES

- (A) Paint "Truxtun Ave UC"
- (B) Paint "Br. No. 50C-0358"
- (C) Concrete Barrier Type 732 (Mod)
- (D) Structure Approach, Type N(30S)
- (E) Temporary Railing (Type K)

CURVE DATA (1)	CURVE DATA (2)	CURVE DATA (3)
R = 1168.80'	R = 4300.00'	R = 2830.00'
Δ = 33°57'14"	Δ = 43°28'04"	Δ = 9°26'50"
T = 356.82'	T = 1714.12'	T = 233.84'
L = 692.64'	L = 3262.22'	L = 466.62'

ALTERNATIVE C

DESIGNED BY	E. Mobo	DATE	3/26/12
DRAWN BY	E. Mobo	DATE	3/26/12
CHECKED BY	R. Mathur	DATE	3/26/12
APPROVED	M. Mohseni	DATE	3/26/12

Mohsen Mohseni
PROJECT ENGINEER

PLANNING STUDY
TRUXTUN AVE UC (WIDEN)

BRIDGE NO.	50-C0358	CU	
SCALE:	As Noted	EA	06-48460

B. Massey
DESIGN OVERSIGHT
6-22-12
SIGN OFF DATE

ADVANCE PLANNING STUDY SHEET (ENGLISH) (REV. 06-01-09)

FILE => C:\PW_WORKING\PtgpWiseb\p0038090\dms90794\Alt C Truxtun Ave UC (widen) 50-C0358_gp01.dgn

USERNAME => p0038090 DATE PLOTTED => 3/28/2012 TIME PLOTTED => 11:22:12 AM

PREPARED FOR THE STATE OF CALIFORNIA - DEPARTMENT OF TRANSPORTATION

DIST.	COUNTY	ROUTE	POST MILES TOTAL PROJECT
06	KER	58	T31.7/R55.4

TRIP
900 Truxtun Ave, Suite 200
Bakersfield, CA 93301

PARSONS
2201 DUPONT DRIVE, SUITE 200
IRVINE, CA 92612

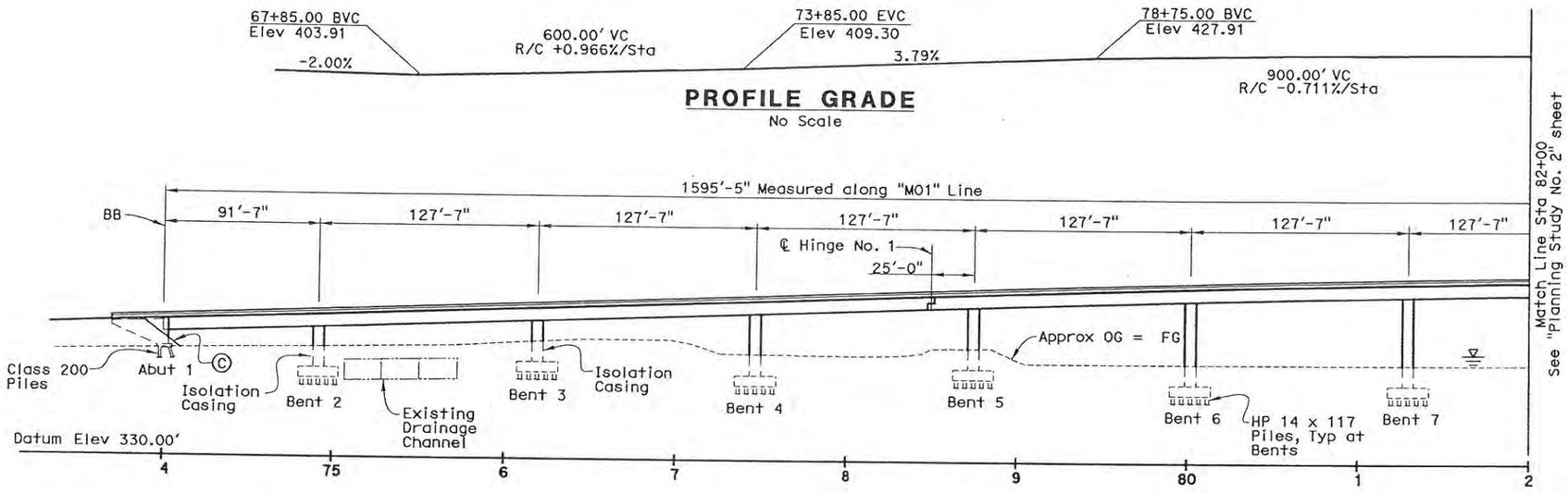

PROFILE GRADE
No Scale

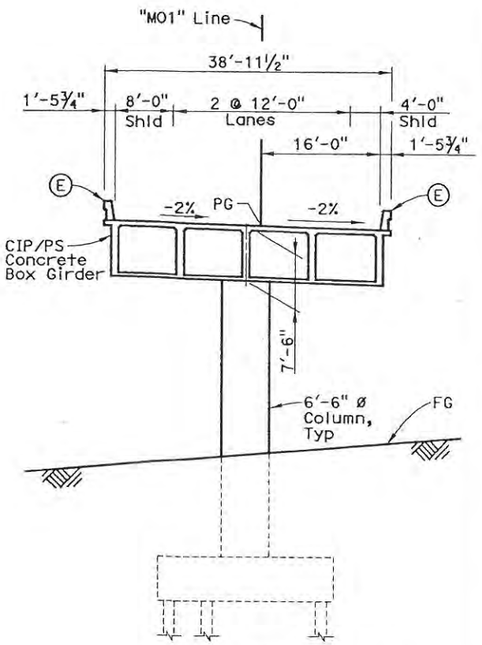

Note: All Piles not Shown.

TYPICAL SECTION
1" = 10'

DATE OF ESTIMATE	12-06-11
BRIDGE REMOVAL	= N/A
STRUCTURE DEPTH	= 7'-6"
LENGTH	= 1595'-5"
WIDTH	= 38'-11½"
AREA	= 62,139 SF
COST/SF INCLUDING 10% MOBILIZATION & 25% CONTINGENCY	= $213/SF
TOTAL COST	= $13,230,000

ELEVATION
1" = 40'

LEGEND

- ⇦ Indicates Direction of Traffic
- ⊕ Indicates Point of Minimum Vertical Clearance
- ≈ Indicates Direction of Flow
- ▽ Water Surface Elevation (WSE) at Bridge for 100 Year Design Flood = 394.15' Average Mean Sea Level

NOTES:

- (A) Paint "WB SR58 OFF-RAMP"
- (B) Paint "Bridge No. 50-xxxx"
- (C) Slope Paving - Full Slope
- (D) Structure Approach, Type N(30S)
- (E) Concrete Barrier Type 736

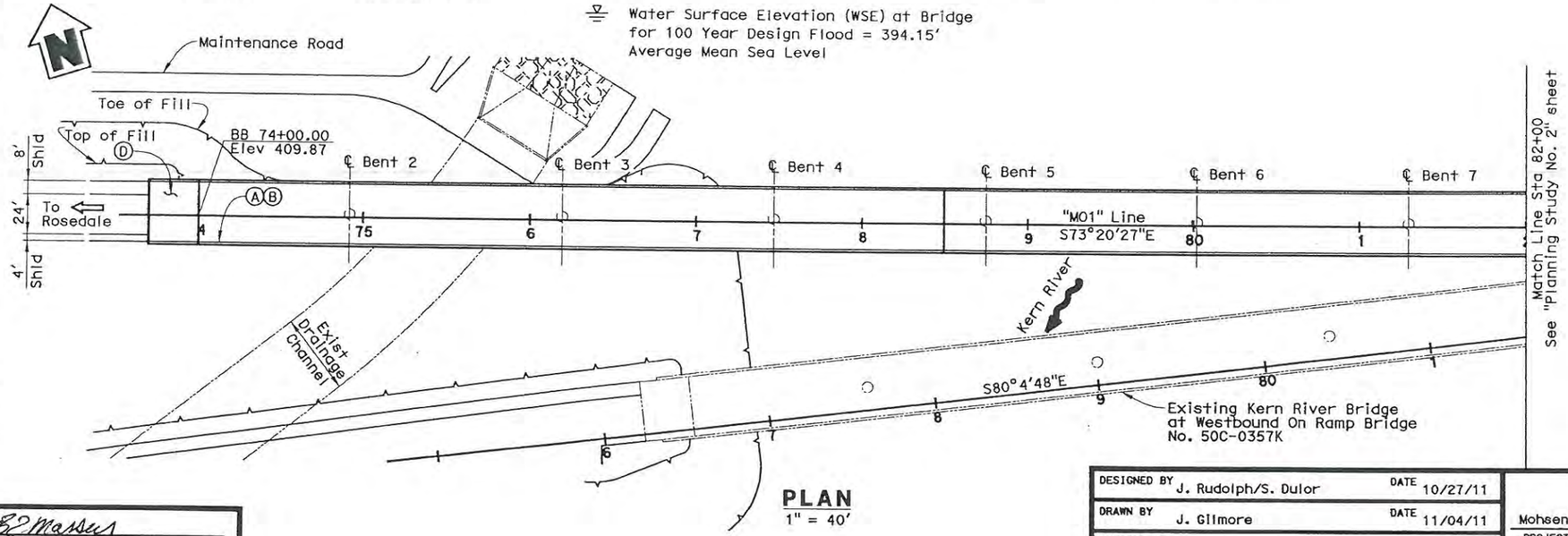

PLAN
1" = 40'

Note:
Traffic will pass through construction site, 16'-6" minimum vertical clearance required under falsework.

ALTERNATIVE C

DESIGNED BY	J. Rudolph/S. Dulor	DATE	10/27/11
DRAWN BY	J. Gilmore	DATE	11/04/11
CHECKED BY	A. Ly	DATE	11/22/11
APPROVED	M. Mohseni	DATE	12/01/11

Mohsen Mohseni
PROJECT ENGINEER

DESIGN OVERSIGHT
6-22-12
SIGN OFF DATE

PLANNING STUDY No. 1

WB SR58 OFF-RAMP (MOHAWK ST) BRIDGE

BRIDGE NO. 50-XXXX	CU
SCALE: As Noted	EA 06-48460

ADVANCE PLANNING STUDY SHEET (ENGLISH) (REV. 06-01-09)

FILE => $REQUEST

USERNAME => $USER DATE PLOTTED => $DATE TIME PLOTTED => $TIME

PREPARED FOR THE STATE OF CALIFORNIA - DEPARTMENT OF TRANSPORTATION

DIST.	COUNTY	ROUTE	POST MILES TOTAL PROJECT
06	KER	58	T31.7/R55.4

TRIP
900 Truxtun Ave, Suite 200
Bakersfield, CA 93301

PARSONS
2201 DUPONT DRIVE, SUITE 200
IRVINE, CA 92612

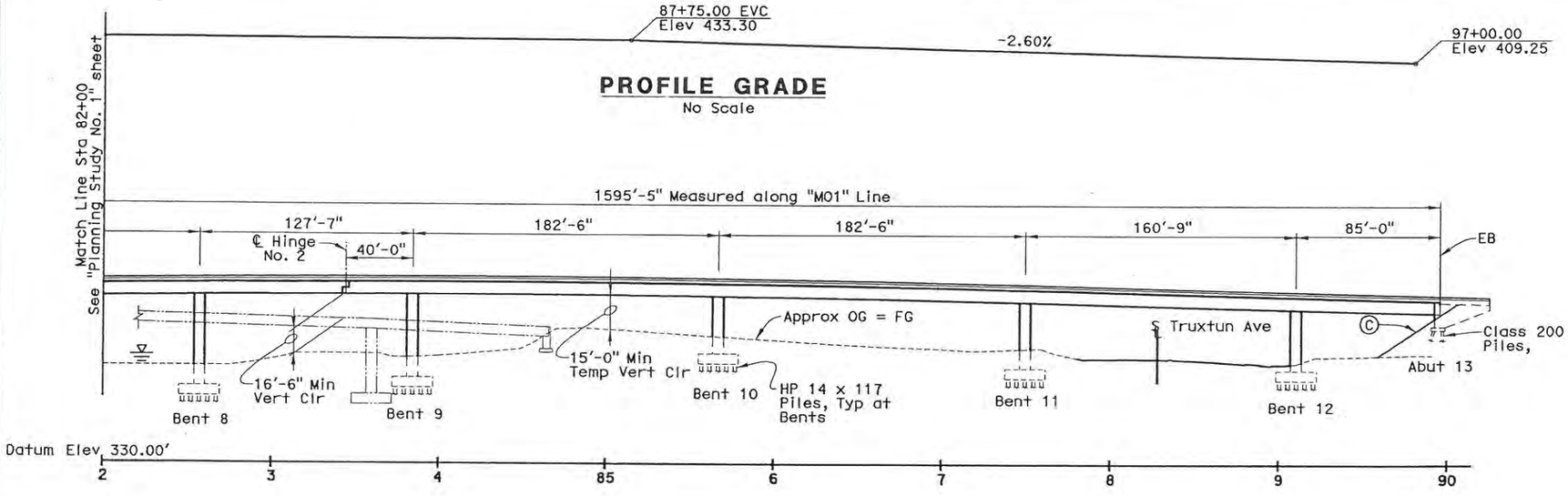

PROFILE GRADE
No Scale

ELEVATION
1" = 40'

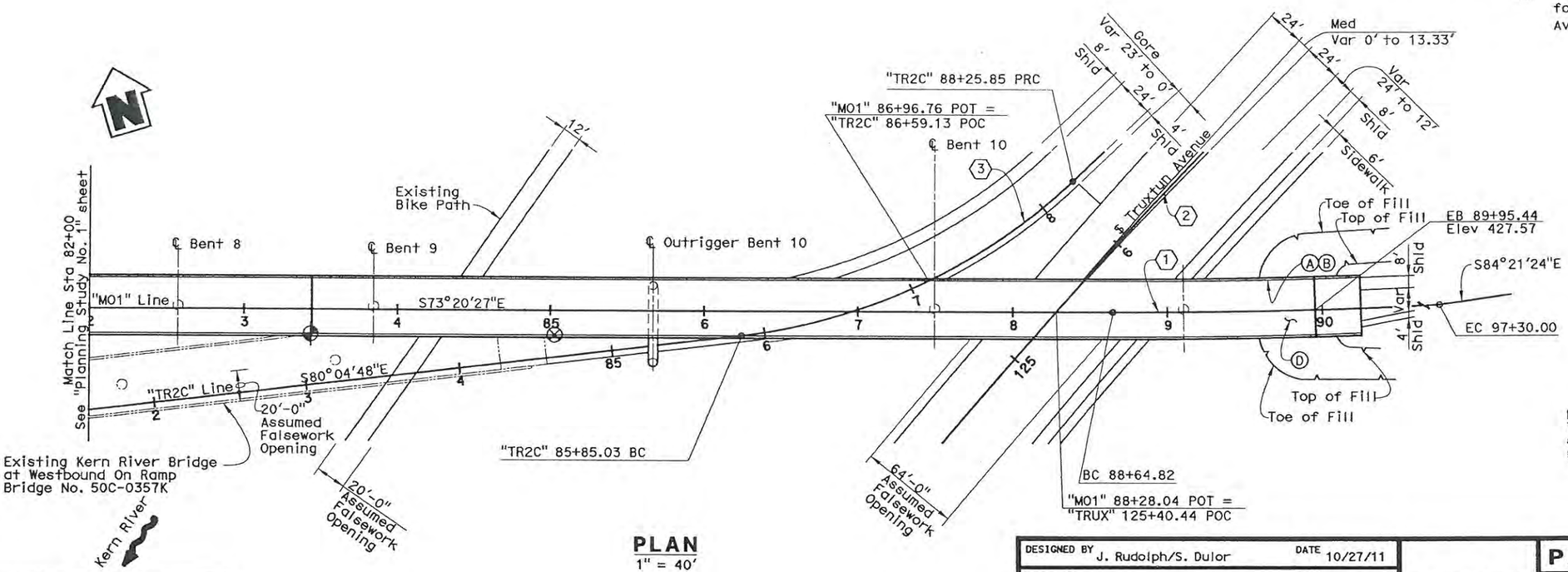

PLAN
1" = 40'

NOTES:

Ⓐ Paint "WB SR58 OFF-RAMP"
Ⓑ Paint "Bridge No. 50-xxxx"
Ⓒ Slope Paving - Full Slope
Ⓓ Structure Approach, Type N(30S)
Ⓔ Concrete Barrier Type 736

LEGEND

⇦ Indicates Direction of Traffic

⊕ Indicates Point of Minimum Vertical Clearance

⊗ Indicates Point of Temporary Minimum Vertical Clearance

Indicates Direction of Flow

Water Surface Elevation (WSE) at Bridge for 100 Year Design Flood = 394.15' Average Mean Sea Level

CURVE DATA ①
R = 4500.00'
Δ = 11°00'57"
T = 433.93'
L = 865.18'

CURVE DATA ②
R = 4300.00'
Δ = 43°28'04"
T = 1714.12'
L = 3262.22'

CURVE DATA ③
R = 375.00'
Δ = 36°47'44"
T = 124.73'
L = 240.83'

Note:
Traffic will pass through construction site, 15'-0" minimum vertical clearance required under falsework.

ALTERNATIVE C

DESIGNED BY	J. Rudolph/S. Dulor	DATE	10/27/11
DRAWN BY	J. Gilmore	DATE	11/04/11
CHECKED BY	A. Ly	DATE	11/22/11
APPROVED	M. Mohseni	DATE	12/01/11

Mohsen Mohseni
PROJECT ENGINEER

PLANNING STUDY No. 2

WB SR58 OFF-RAMP (MOHAWK ST) BRIDGE

BRIDGE NO. 50-XXXX	CU
SCALE: As Noted	EA 06-48460

BC Marsey
DESIGN OVERSIGHT
6-22-12
SIGN OFF DATE

ADVANCE PLANNING STUDY SHEET (ENGLISH) (REV. 06-01-09)

FILE => $REQUEST

USERNAME => $USER DATE PLOTTED => $DATE TIME PLOTTED => $TIME

PREPARED FOR THE STATE OF CALIFORNIA - DEPARTMENT OF TRANSPORTATION

DIST.	COUNTY	ROUTE	POST MILES TOTAL PROJECT
06	KER	99	21.2/23.8

TRIP
900 Truxtun Ave, Suite 200
Bakersfield, CA 93301

PARSONS
2201 DUPONT DRIVE, SUITE 200
IRVINE, CA 92612

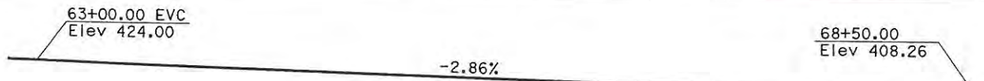

PROFILE GRADE
No Scale

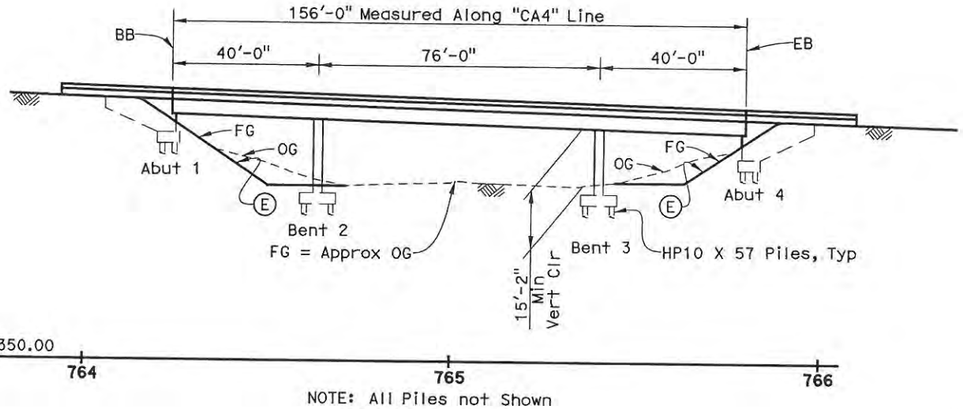

NOTE: All Piles not Shown

ELEVATION
1" = 20'

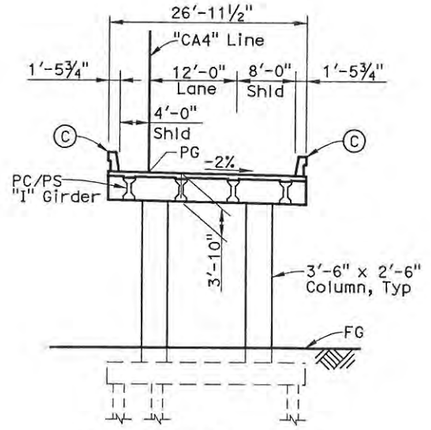

Note: All Piles not Shown.

TYPICAL SECTION
1" = 10'

NOTES:

Ⓐ Paint "Truxtun Avenue On-Ramp Undercrossing"
Ⓑ Paint "Bridge No. 50-XXXX"
Ⓒ Concrete Barrier Type 736
Ⓓ Structure Approach Type N(30S)
Ⓔ Slope Paving

Note:
Traffic will pass through construction site.

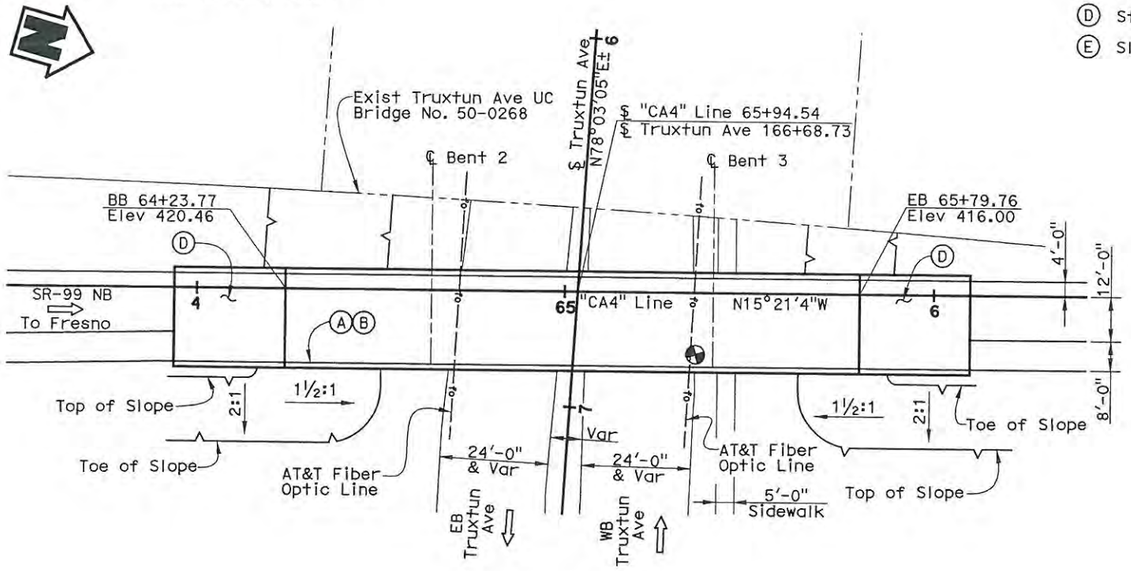

PLAN
1" = 20'

LEGEND:

Existing Bridge
Indicates Direction of Traffic
Indicates Point of Minimum Vertical Clearance.

DATE OF ESTIMATE	= 2/9/12
STRUCTURE DEPTH	= 3'-10"
LENGTH	= 156'-0"
WIDTH	= 26'-11½"
AREA OF WIDENINGS	= 4,206 SF
COST/SF INCLUDING 10% MOBILIZATION & 25% CONTINGENCY	= $ 195
TOTAL COST	= $ 820,000

ALTERNATIVE C

BC Massey
DESIGN OVERSIGHT
6-22-12
SIGN OFF DATE

DESIGNED BY	J. Fix	DATE	2/9/12
DRAWN BY	P. Johnson	DATE	2/9/12
CHECKED BY	M. Mohseni	DATE	2/10/12
APPROVED	M. Mohseni	DATE	2/10/12

Mohsen Mohseni
PROJECT ENGINEER

PLANNING STUDY
TRUXTUN AVENUE ON-RAMP UC

BRIDGE NO. 50-XXXX	CU
SCALE: As Noted	EA 06-48460

ADVANCE PLANNING STUDY SHEET (ENGLISH) (REV. 06-01-09)

FILE => $REQUEST

USERNAME => $USER DATE PLOTTED => $DATE TIME PLOTTED => $TIME

PREPARED FOR THE STATE OF CALIFORNIA - DEPARTMENT OF TRANSPORTATION

DIST.	COUNTY	ROUTE	POST MILES TOTAL PROJECT
06	KER	58	33.1/55.4

TRIP
900 Truxtun Ave, Suite 200
Bakersfield, CA 93301

PARSONS
2201 DUPONT DRIVE, SUITE 200
IRVINE, CA 92612

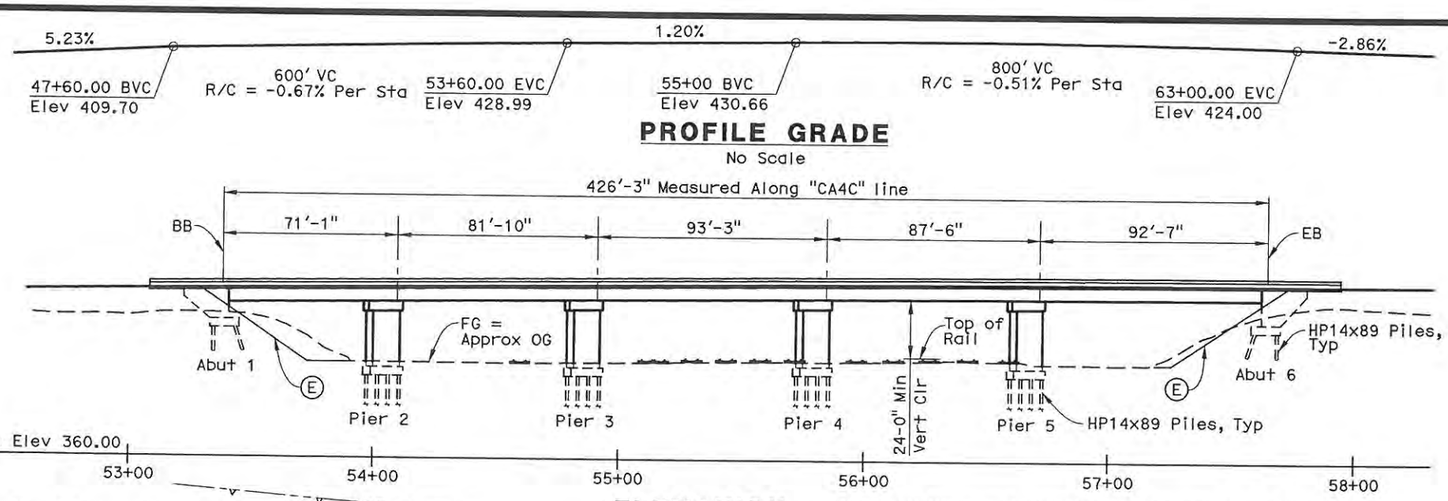

PROFILE GRADE
No Scale

ELEVATION
1" = 30'

Note: All Piles and existing bridge are not shown.

Note:
1. Rail Traffic will pass through construction site.
2. Horizontal clearances are measured perpendicular from centerline of track to face of pier wall.
3. The elevation of the existing top of rail profile shall be verified before beginning construction.

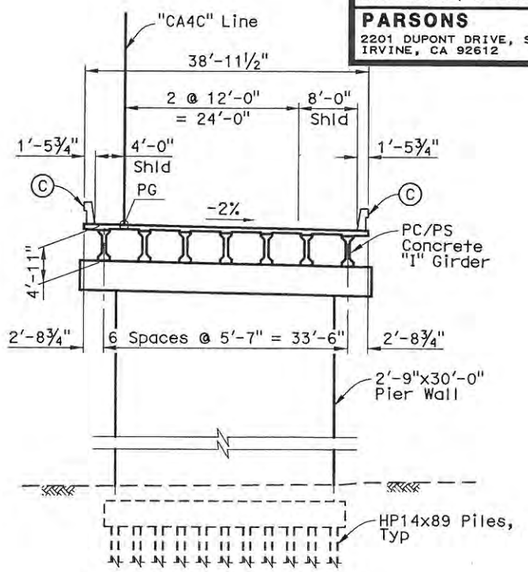

TYPICAL SECTION
1" = 10'

NOTES:
- (A) Paint "BAKERSFIELD YARD OVERHEAD"
- (B) Paint "Bridge No. 50-xxxx"
- (C) Concrete Barrier Type 736
- (D) Structure Approach, Type N(30S)
- (E) Slope Paving

LEGEND:
- ⇨ Indicates Direction of Traffic
- Indicates Point of Minimum Vertical Clearance
- Indicates MBGR
- Indicates Existing Structure

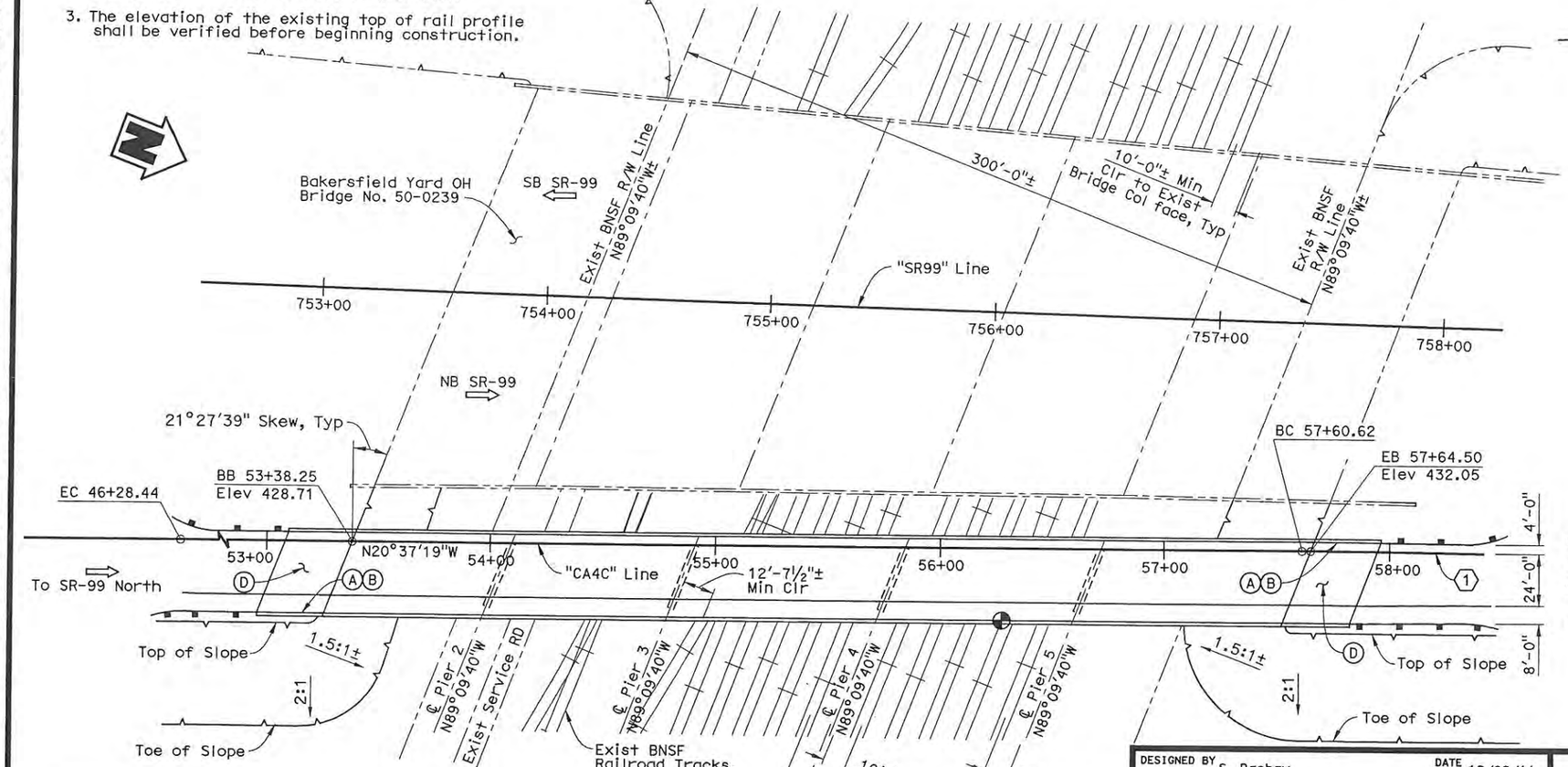

PLAN
1" = 30'

CURVE DATA (1)
R = 4900.00'
△ = 5°16'15"
T = 225.55'
L = 450.77'

DATE OF ESTIMATE	=	12/02/11
STRUCTURE DEPTH	=	4'-11"
LENGTH	=	426'-3"
WIDTH	=	38'-11½"
AREA	=	16,606/SF
COST/SF INCLUDING 10% MOBILIZATION & 25% CONTINGENCY	=	$196/SF
RAILROAD ASSOCIATED COST	=	$50,000
TOTAL COST	=	$3,260,000

ALTERNATIVE C

DESIGNED BY	S. Bashaw	DATE	12/02/11
DRAWN BY	S. LEE	DATE	12/02/11
CHECKED BY	M. Mohseni	DATE	12/02/11
APPROVED	M. Mohseni	DATE	12/02/11

Mohsen Mohseni
PROJECT ENGINEER

PLANNING STUDY
BAKERSFIELD YARD OVERHEAD

BRIDGE NO. 50-0XXX	CU
SCALE: As Noted	EA 06-48460

B E Massey
DESIGN OVERSIGHT
6-22-12
SIGN OFF DATE

ADVANCE PLANNING STUDY SHEET (ENGLISH) (REV. 06-01-09)

FILE => $REQUEST

USERNAME => $USER DATE PLOTTED => $DATE TIME PLOTTED => $TIME

PREPARED FOR THE STATE OF CALIFORNIA - DEPARTMENT OF TRANSPORTATION

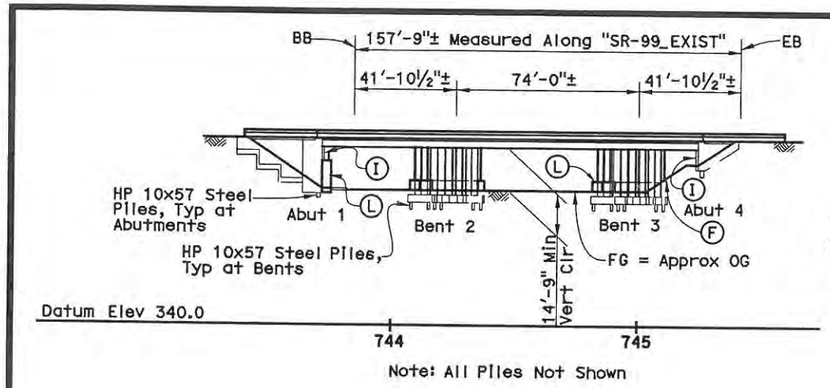

Note: All Piles Not Shown

ELEVATION
1" = 30'

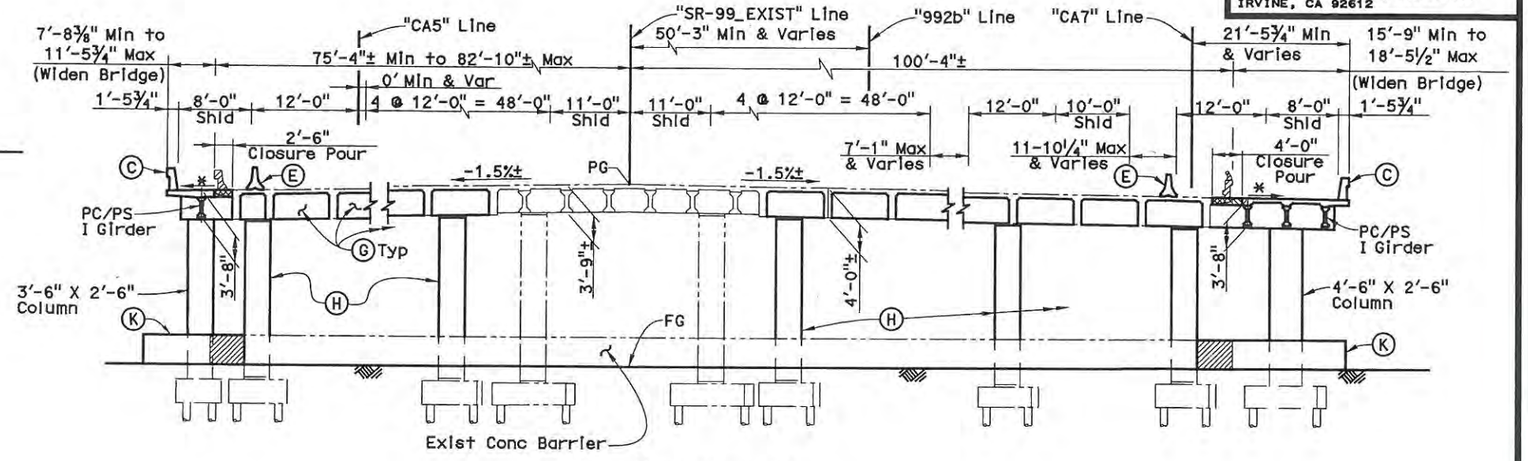

Note: All piles not shown.
* Match existing cross slope

TYPICAL SECTION
1 " = 10'

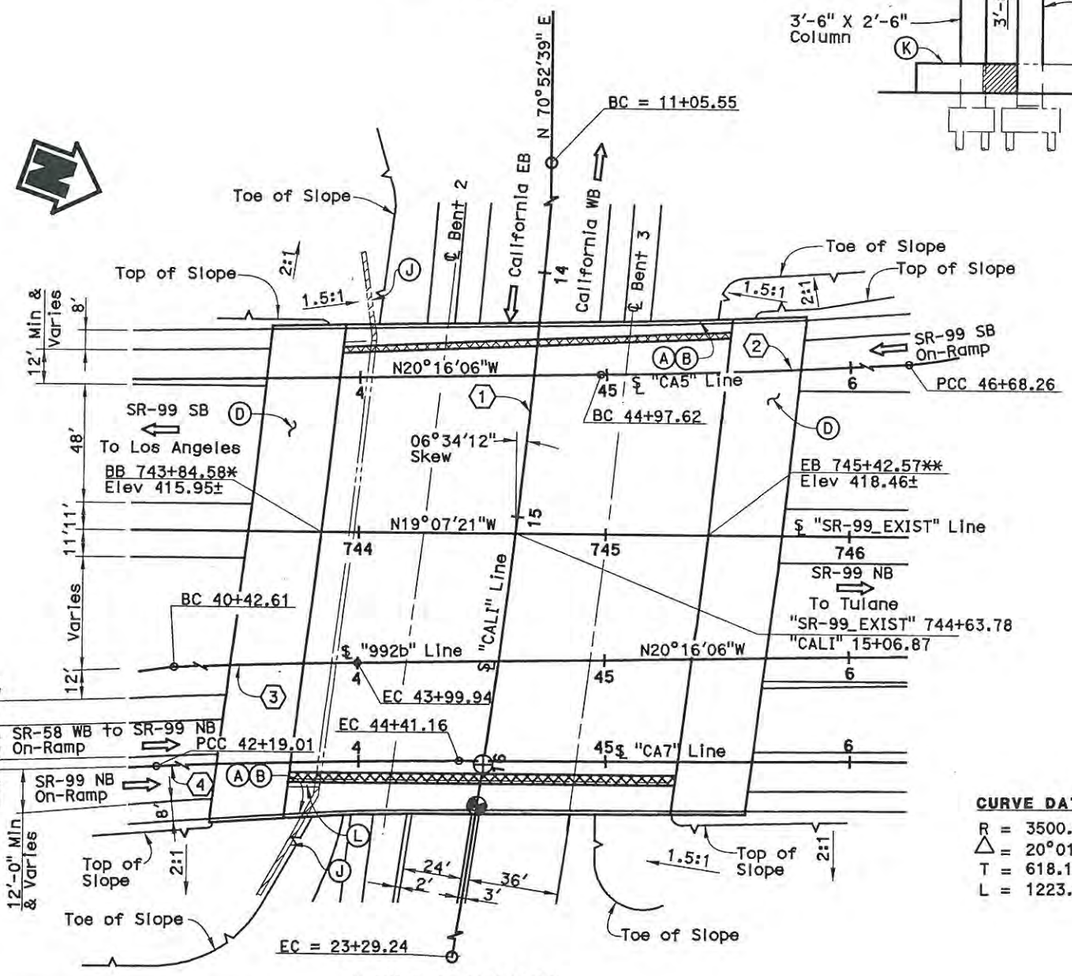

PLAN
1" = 30'

NOTES:

- (A) Paint "California Avenue Undercrossing"
- (B) Paint "Bridge No. 50-0260"
- (C) Concrete Barrier Type 736
- (D) Structure Approach Type N(30D)
- (E) Temporary Railing Type K
- (F) Slope Paving
- (G) Seismic Retrofit Bent Cap
- (H) Seismic Retrofit FRP Composite Column Casing
- (I) Exist Abutment Diaphragm Seismic Retrofit
- (J) Remove Exist Type 1 Ret Wall
- (K) Concrete Barrier at Bents to match existing
- (L) Concrete Return Wall where Exist Tieback Wall ends

CURVE DATA (1)	CURVE DATA (2)	CURVE DATA (3)	CURVE DATA (4)
R = 3500.00'±	R = 3000.00	R = 3000.00	R = 2972.00
△ = 20°01'59"±	△ = 03°15'32"	△ = 06°49'28"	△ = 04°16'57"
T = 618.19'±	T = 85.34'	T = 178.88'	T = 111.12'
L = 1223.75'±	L = 170.63'	L = 357.33'	L = 222.15'

DATE OF ESTIMATE	= 3/28/12
BRIDGE REMOVAL	= 792 SF
STRUCTURE DEPTH	= 3'-8"
LENGTH	= 157'-9"±
WIDTH	= Var
AREA	= 3,429 SF
COST/SF INCLUDING 10% MOBILIZATION & 25% CONTINGENCY	= $ 554/SF
BRIDGE REMOVAL	= $ 41,250
SEISMIC RETROFIT	= $ 607,000
BRIDGE MAINTENANCE REPAIRS	= $ 43,453
TOTAL COST	= $ 1,900,000

LEGEND:

- Existing Bridge
- Indicates Direction of Traffic
- Bridge Removal
- Closure Pour
- Indicates Point of Minimum Vertical Clearance
- Indicates Exist Point of Minimum Vertical Clearance (14'-9"±)
- MBGR

ALTERNATIVE C

DIST.	COUNTY	ROUTE	POST MILES TOTAL PROJECT
06	KER	58	T31.7/R55.6

TRIP
900 Truxtun Ave, Suite 200
Bakersfield, CA 93301

PARSONS
2201 DUPONT DRIVE, SUITE 200
IRVINE, CA 92612

DESIGN OVERSIGHT: B E Massey, 6-22-12 (SIGN OFF DATE)

DESIGNED BY	M. Ruvalcaba	DATE	3/28/12
DRAWN BY	P. Johnson	DATE	3/30/12
CHECKED BY	M. Mohseni	DATE	4/4/12
APPROVED	M. Mohseni	DATE	4/6/12

Mohsen Mohseni
PROJECT ENGINEER

PLANNING STUDY

CALIFORNIA AVE. UC (WIDEN)

BRIDGE NO. 50-0260	CU
SCALE: As Noted	EA 06-48460

ADVANCE PLANNING STUDY SHEET (ENGLISH) (REV. 08-01-09)

FILE => c:\pw_working\ptgpwiseb\36671\dms92607\50-0260-A-GP01.dgn

USERNAME => 36671 DATE PLOTTED => 4/9/2012 TIME PLOTTED => 3:29:51 PM

PREPARED FOR THE STATE OF CALIFORNIA - DEPARTMENT OF TRANSPORTATION

DIST.	COUNTY	ROUTE	POST MILES TOTAL PROJECT
06	KER	58	T31.7/ R55.6

TRIP
900 Truxtun Ave, Suite 200
Bakersfield, CA 93301

PARSONS
2201 DUPONT DRIVE, SUITE 200
IRVINE, CA 92612

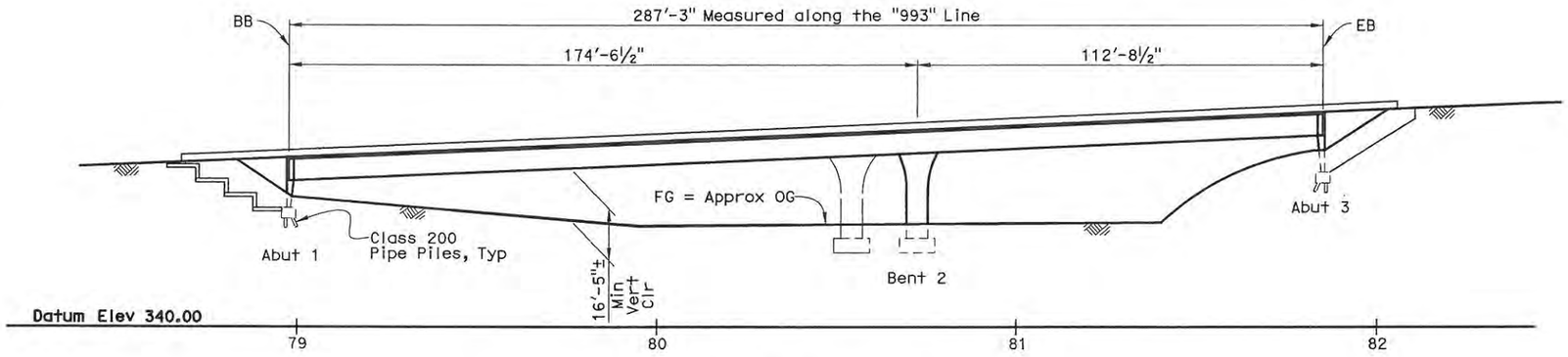

ELEVATION
1" = 20'

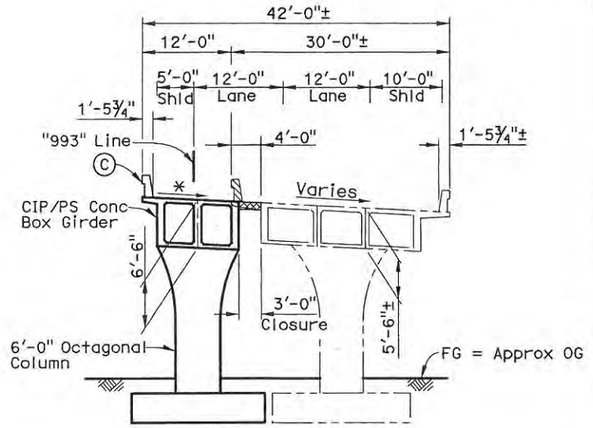

* Match Existing Slope

TYPICAL SECTION
1" = 10'

DATE OF ESTIMATE	=	04/06/12
BRIDGE REMOVAL	=	1,152 SF
STRUCTURE DEPTH	=	6'-6"
LENGTH	=	287'-3"
WIDTH	=	16'-0"
AREA	=	4,596 SF
COST/SF INCLUDING 10% MOBILIZATION & 25% CONTINGENCY	=	$ 218/SF
TOTAL COST	=	$ 1,000,000

NOTES:

(A) Paint "WIBLE ROAD UC"
(B) Paint "Bridge No. 50-0427"
(C) Concrete Barrier Type 736
(D) Structure Approach Type N(30D)

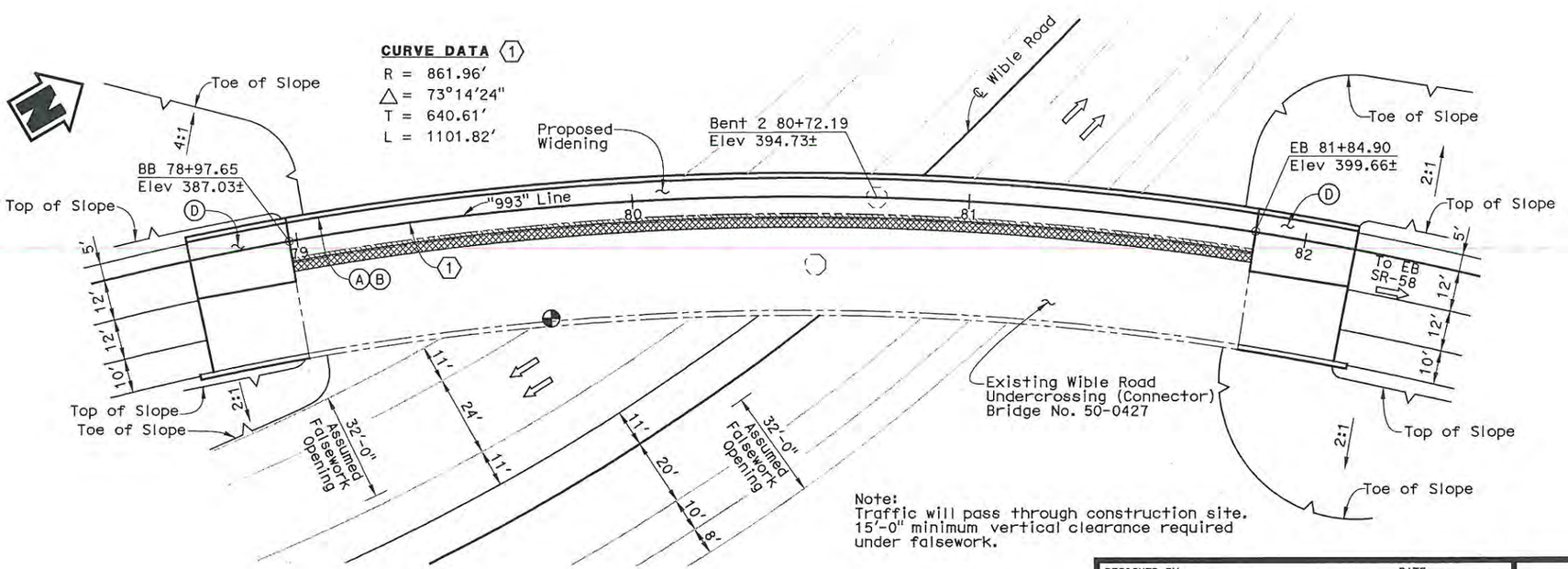

Note:
Traffic will pass through construction site.
15'-0" minimum vertical clearance required under falsework.

PLAN
1" = 20'

LEGEND:

⇨ Indicates Direction of Traffic
⊕ Indicates Point of Minimum Vertical Clearance
- - - - Indicates Existing Structure
Closure Pour
Bridge Removal

ALTERNATIVE C

DESIGNED BY S. Bashaw	DATE 04/06/12	Mohsen Mohseni PROJECT ENGINEER	**PLANNING STUDY**
DRAWN BY S. Lee	DATE 04/06/12		**WIBLE ROAD UNDERCROSSING (CONNECTOR) (WIDEN)**
CHECKED BY R. Mathur	DATE 04/06/12		BRIDGE NO. 50-0427 / CU
APPROVED M. Mohseni	DATE 04/06/12		SCALE: As Noted / EA 06-48460

DESIGN OVERSIGHT
6-22-12
SIGN OFF DATE

ADVANCE PLANNING STUDY SHEET (ENGLISH) (REV. 06-01-09)

FILE => $REQUEST

TIME PLOTTED => $TIME
DATE PLOTTED => @DATE
USERNAME => @USER

PREPARED FOR THE STATE OF CALIFORNIA - DEPARTMENT OF TRANSPORTATION

DIST.	COUNTY	ROUTE	POST MILES TOTAL PROJECT
06	KER	58	33.1/55.4

TRIP
900 Truxtun Ave, Suite 200
Bakersfield, CA 93301

PARSONS
2201 DUPONT DRIVE, SUITE 200
IRVINE, CA 92612

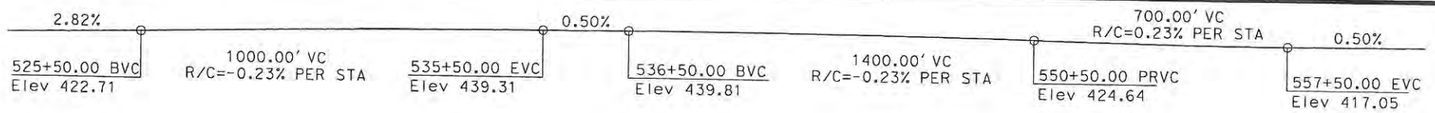

PROFILE GRADE
No Scale

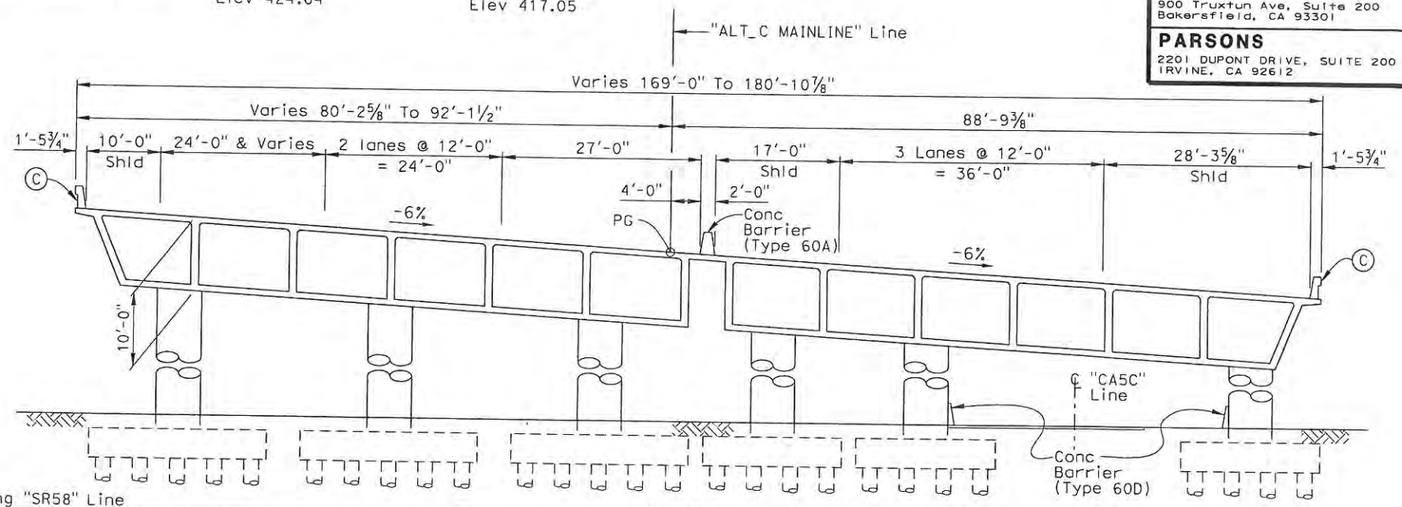

TYPICAL SECTION
1" = 10'

NOTE
1. Traffic will pass through construction site, 15'-0" mininum vertical clearance required under falsework.

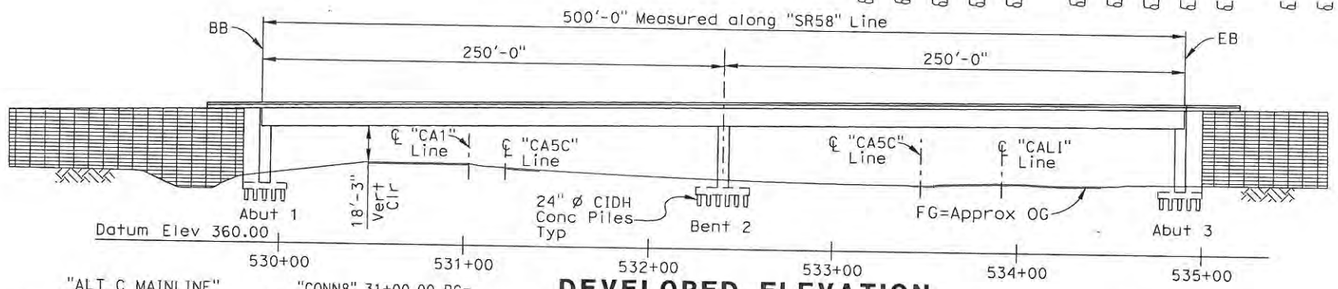

DEVELOPED ELEVATION
1" = 40'

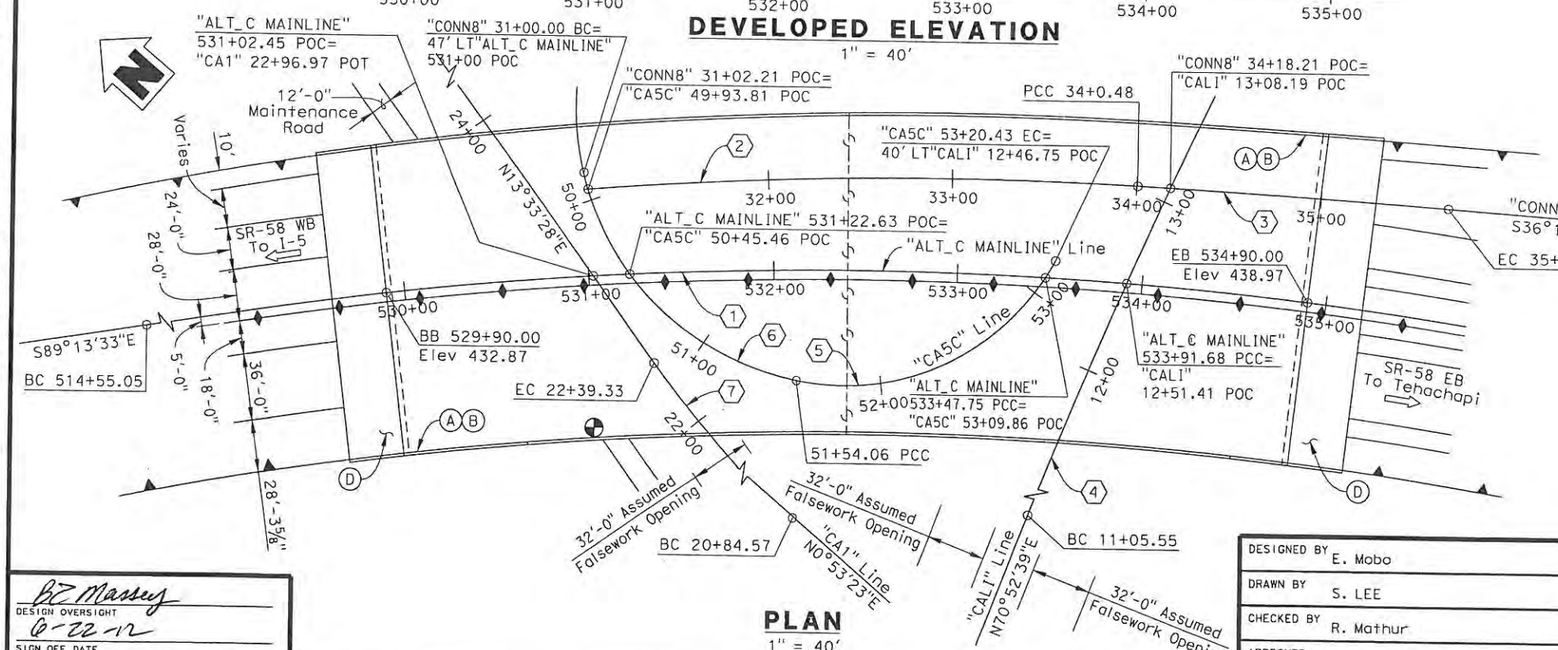

PLAN
1" = 40'

CURVE DATA (5)
R = 129.99'
△ = 73°19'47"
T = 96.77'
L = 166.37'

CURVE DATA (1)
R = 2100.00'
△ = 70°06'12"
T = 1473.26'
L = 2569.42'

CURVE DATA (6)
R = 149.99'
△ = 185°34'15"
T = N/A
L = 485.80'

CURVE DATA (2)
R = 2147.00'
△ = 8°01'07"
T = 150.49'
L = 300.48'

CURVE DATA (3)
R = 7534.00'
△ = 1°16'41"
T = 84.02'
L = 168.04'

CURVE DATA (7)
R = 699.97'
△ = 12°40'05"
T = 77.70'
L = 154.76'

CURVE DATA (4)
R = 3499.85'
△ = 20°01'59"
T = 618.16'
L = 1223.70'

DATE OF ESTIMATE	= 03-26-12
STRUCTURE DEPTH	= 10'-0"
LENGTH	= 500'-0"
WIDTH	= 175'-6"
AREA	= 87,750 SF
COST/SF INCLUDING 10% MOBILIZATION & 25% CONTINGENCY	= $177/SF
TOTAL COST	= $15,540,000

NOTES:
- (A) Paint "CALIFORNIA AVE UC"
- (B) Paint "Bridge No. 50-XXXX"
- (C) Concrete Barrier Type 736
- (D) Structure Approach Type N(30S)

LEGEND:
- ⇨ Indicates Direction of Traffic
- Indicates Point of Minimum Vertical Clearance
- Indicates MSE Walls, (See Road Plans)
- Indicates Conc Barrier, (Type 60A)

ALTERNATIVE C

BC Massey
DESIGN OVERSIGHT
6-22-12
SIGN OFF DATE

DESIGNED BY	E. Mobo	DATE	03/26/12
DRAWN BY	S. LEE	DATE	03/26/12
CHECKED BY	R. Mathur	DATE	03/26/12
APPROVED	M.Mohseni	DATE	03/26/12

Mohsen Mohseni
PROJECT ENGINEER

PLANNING STUDY
CALIFORNIA AVE UC

BRIDGE NO. 50-XXXX	CU
SCALE: As Noted	EA 06-48460

ADVANCE PLANNING STUDY SHEET (ENGLISH) (REV. 06-01-09)

FILE => C:\PW_WORKING\PtgpWlseb\p0038090\dms90794\Alt C California Ave UC-GP01.dgn

USERNAME => p0038090 DATE PLOTTED => 3/28/2012 TIME PLOTTED => 10:58:31 AM

PREPARED FOR THE STATE OF CALIFORNIA - DEPARTMENT OF TRANSPORTATION

DIST.	COUNTY	ROUTE	POST MILES TOTAL PROJECT
06	KER	58	T31.7/R55.4

TRIP
900 Truxtun Ave, Suite 200
Bakersfield, CA 93301

PARSONS
2201 DUPONT DRIVE, SUITE 200
IRVINE, CA 92612

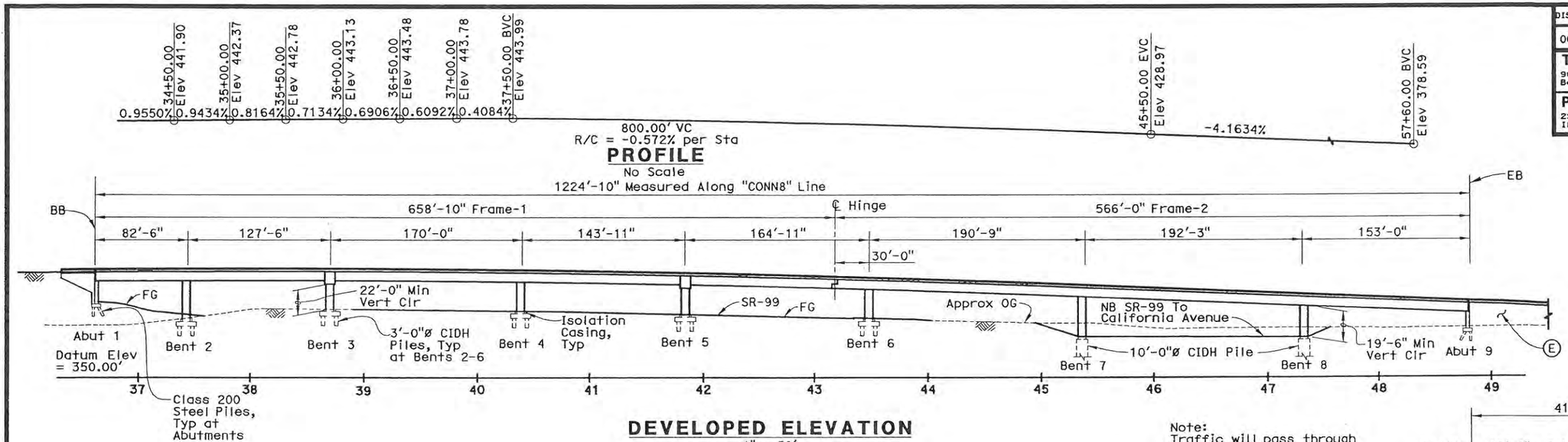

DEVELOPED ELEVATION
1" = 50'

NOTES:

Ⓐ Paint "NB SR-99 To WB SR-58 Connector"
Ⓑ Paint "Bridge No. 50-XXXX"
Ⓒ Concrete Barrier Type 736
Ⓓ Structure Approach Type N (30S)
Ⓔ Retaining Wall, see "Road Plans"

LEGEND:

- Indicates Direction of Traffic
- Indicates Point of Minimum Vertical Clearance
- Retaining Wall

Note:
Traffic will pass through construction site, 15'-0" minimum vertical clearance required under falsework.

DATE OF ESTIMATE	= 11/18/11
STRUCTURE DEPTH	= 7'-10"
LENGTH	= 1224'-10"
WIDTH	= 41'-11½"
AREA	= 51,392 SF
COST/SF INCLUDING 10% MOBILIZATION & 25% CONTINGENCY	= $ 215
TOTAL COST	= $ 11,040,000

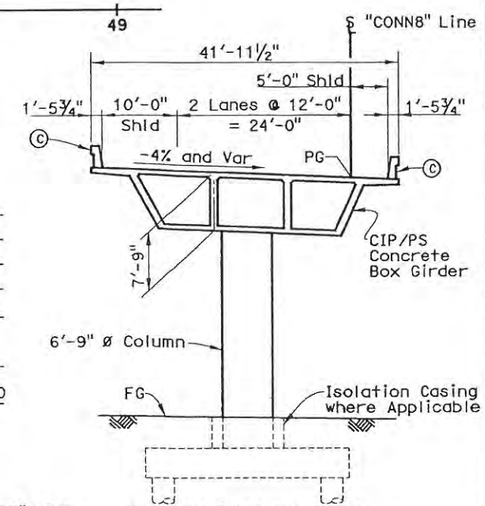

Note: All Piles not Shown.

TYPICAL SECTION
1" = 10'

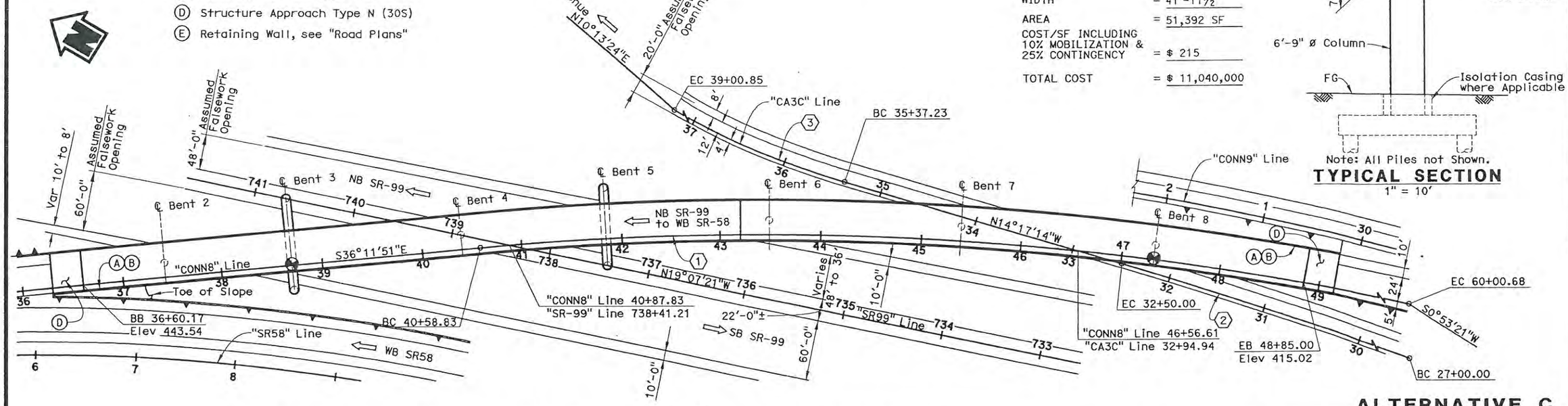

PLAN
1" = 50'

ALTERNATIVE C

CURVE DATA ①	CURVE DATA ②	CURVE DATA ③
R = 3000.00'	R = 4975.60'	R = 850.00'
△ = 37°05'12"	△ = 6°20'00"	△ = 24°30'38"
T = 1006.31'	T = 275.28'	T = 184.63'
L = 1941.86'	L = 550.00'	L = 363.62

DESIGN OVERSIGHT
6-22-12
SIGN OFF DATE

DESIGNED BY	S. Mullangi	DATE	11/18/11
DRAWN BY	P. Johnson	DATE	11/18/11
CHECKED BY	M. Mohseni	DATE	11/18/11
APPROVED	M. Mohseni	DATE	11/18/11

Mohsen Mohseni
PROJECT ENGINEER

PLANNING STUDY
NB SR-99 TO WB SR-58 CONNECTOR

BRIDGE NO. 50-XXXX	CU
SCALE: As Noted	EA 06-48460

ADVANCE PLANNING STUDY SHEET (ENGLISH) (REV. 06-01-09)

FILE => $REQUEST

DATE PLOTTED => $DATE
TIME PLOTTED => $TIME
USERNAME => $USER

PREPARED FOR THE STATE OF CALIFORNIA - DEPARTMENT OF TRANSPORTATION

DIST.	COUNTY	ROUTE	POST MILES TOTAL PROJECT
06	KER	58	T31.7/R55.4

TRIP
900 Truxtun Ave, Suite 200
Bakersfield, CA 93301

PARSONS
2201 DUPONT DRIVE, SUITE 200
IRVINE, CA 92612

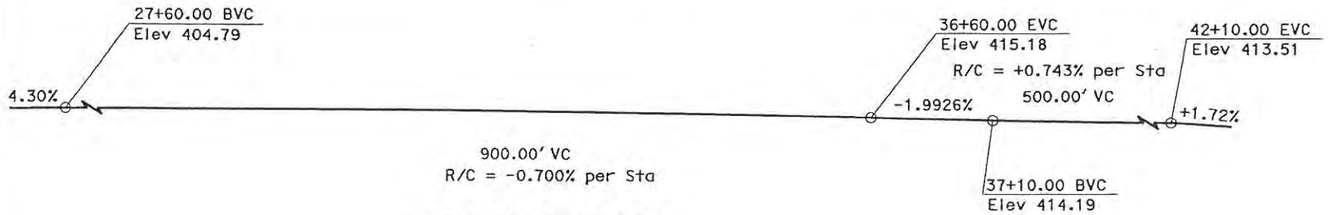

PROFILE GRADE
No Scale

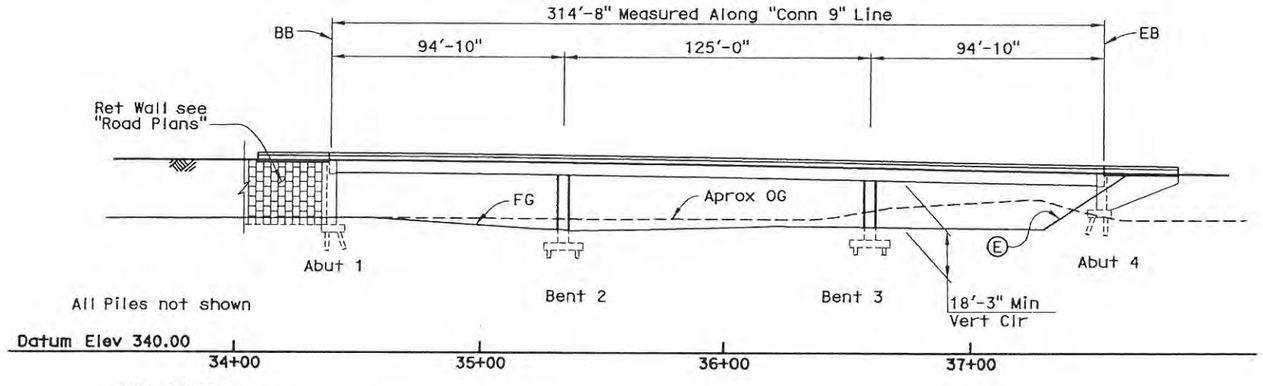

PILE DATA:

Abuts: Class 140 Pipe Piles
Design Length = 40'-0"

Bents: Class 200 Pipe Piles
Design Length = 40'-0"

ELEVATION
1" = 30'

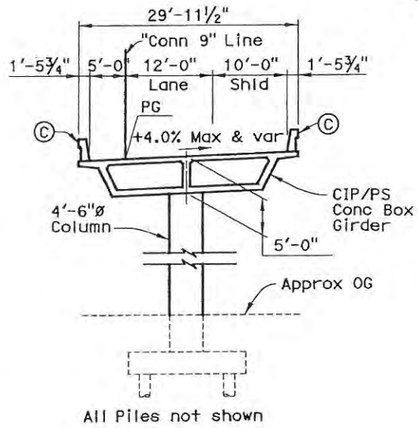

TYPICAL SECTION
1" = 10'

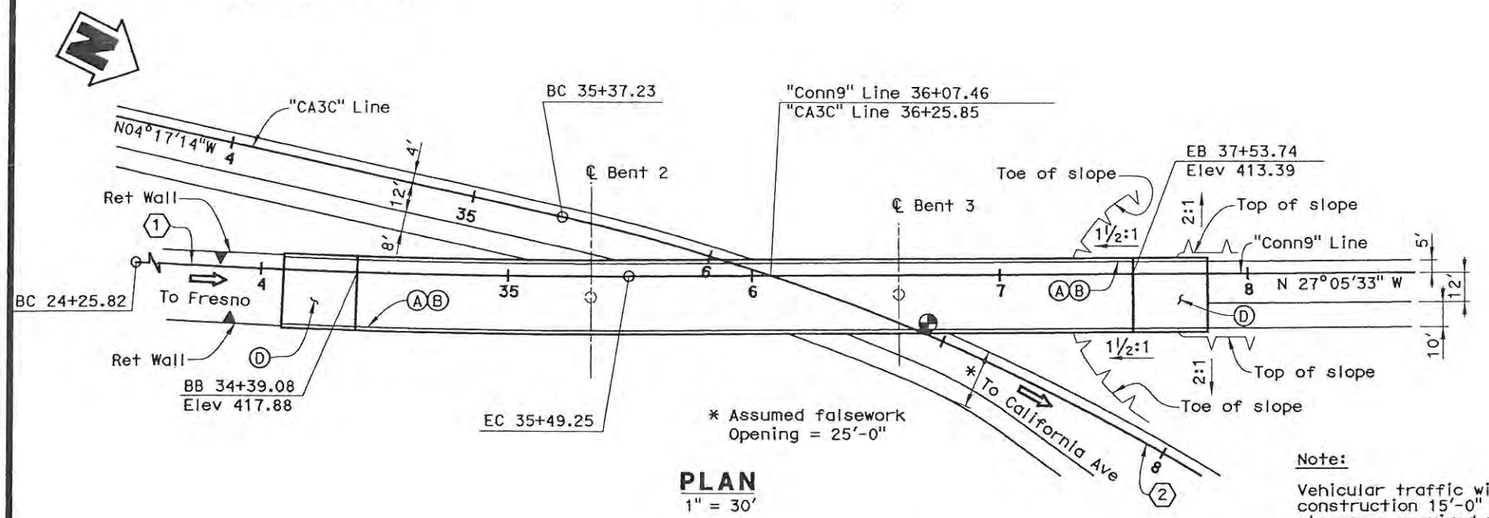

PLAN
1" = 30'

Note:

Vehicular traffic will pass under construction 15'-0" Min Vert clearance required under falsework.

DATE OF ESTIMATE	12-02-11
BRIDGE REMOVAL	= N/A
STRUCTURE DEPTH	= 5'-0"
LENGTH	= 314'-8"
WIDTH	= 29'-11½"
AREA	= 9427 SF
COST/SF INCLUDING 10% MOBILIZATION & 25% CONTINGENCY	= $160/SF
TOTAL COST	= $1,510,000

NOTES

Ⓐ Paint "NB SR-99 Bypass"
Ⓑ Paint "Br. No. 50-xxxx"
Ⓒ Concrete Barrier Type 736
Ⓓ Structure Approach, Type N(30S)
Ⓔ Slope Paving

LEGEND

⇨ Indicates Direction of Traffic

⊕ Indicates Point of Minimum Vertical Clearance

CURVE DATA ①
R = 3024.00'
Δ = 21°17'08"
T = 568.26'
L = 1123.43'

CURVE DATA ②
R = 850.00'
Δ = 24°30'37"
T = 184.63'
L = 363.62'

ALTERNATIVE C

BE Massey
DESIGN OVERSIGHT
6-22-12
SIGN OFF DATE

DESIGNED BY	A. Hamza	DATE 12/02/11
DRAWN BY	A. Segura	DATE 12/02/11
CHECKED BY	M. Mohseni	DATE 12/02/11
APPROVED	M. Mohseni	DATE 12/02/11

Mohsen Mohseni
PROJECT ENGINEER

PLANNING STUDY
NB SR-99 BYPASS

BRIDGE NO. 50-XXXX	CU
SCALE: As Noted	EA 06-48460

ADVANCE PLANNING STUDY SHEET (ENGLISH) (REV. 06-01-09)

FILE => $REQUEST

USERNAME => $USER DATE PLOTTED => $DATE TIME PLOTTED => $TIME

PREPARED FOR THE STATE OF CALIFORNIA - DEPARTMENT OF TRANSPORTATION

DIST.	COUNTY	ROUTE	POST MILES TOTAL PROJECT
06	KER	58	33.1/55.4

TRIP
900 Truxtun Ave, Suite 200
Bakersfield, CA 93301

PARSONS
2201 DUPONT DRIVE, SUITE 200
IRVINE, CA 92612

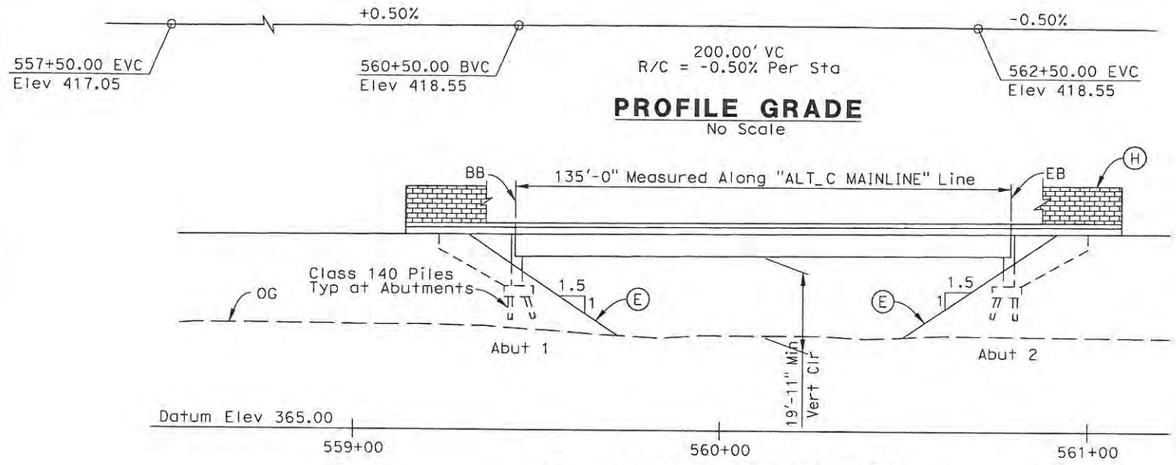

DEVELOPED ELEVATION
1" = 20'

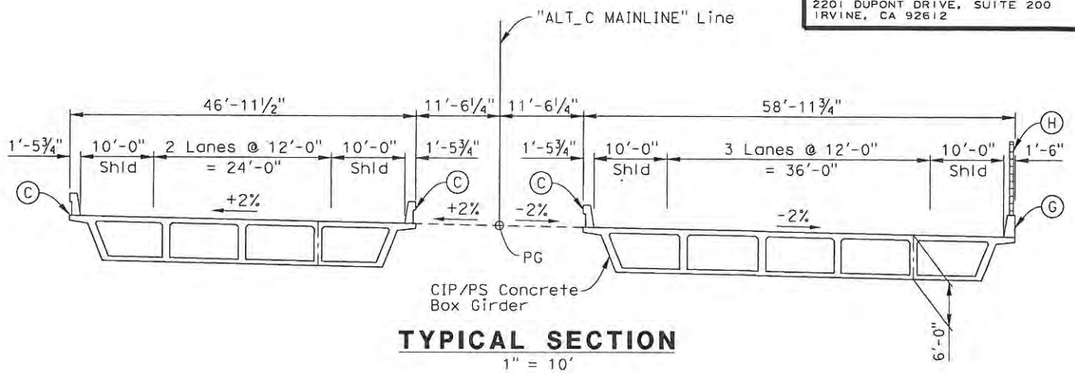

TYPICAL SECTION
1" = 10'

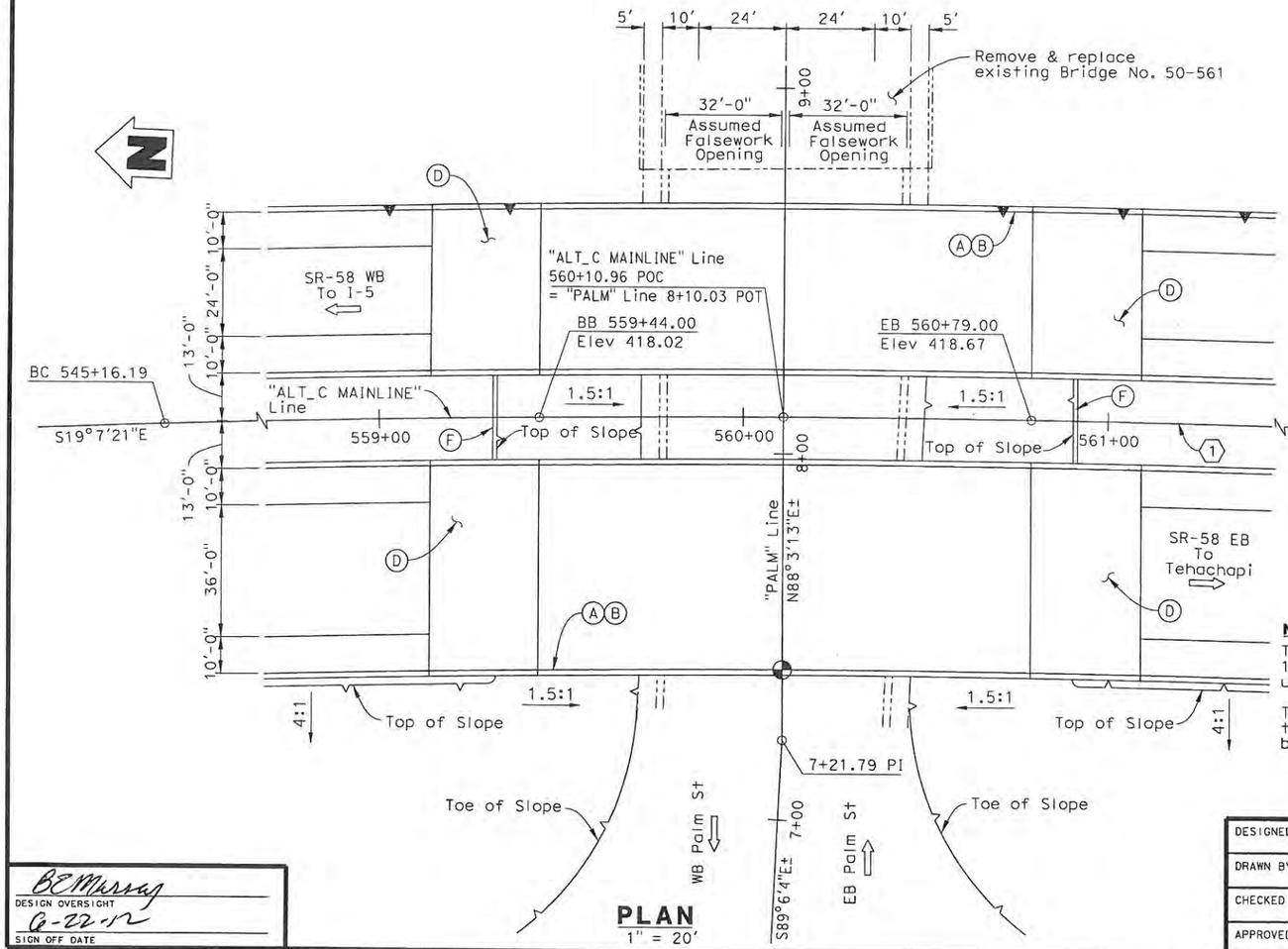

PLAN
1" = 20'

DATE OF ESTIMATE	= 04/06/12
BRIDGE REMOVAL	= N/A
STRUCTURE DEPTH	= 6'-0"
LENGTH	= 135'-0"
WIDTH	= 105'-11"
AREA	= 14,299 SF
COST/SF INCLUDING 10% MOBILIZATION & 25% CONTINGENCY	= $148/SF
TOTAL COST	= $2,110,000

CURVE DATA (1)
R = 5000.00'
△ = 19°57'55"
T = 880.07'
L = 1742.30'

NOTES:
- (A) Paint "palm Street UC"
- (B) Paint "Bridge No. 50-xxxxR/L"
- (C) Concrete Barrier Type 736
- (D) Structure Approach Type N(30S)
- (E) Slope Paving
- (F) Chain Link Fence
- (G) Concrete Barrier Type 736S
- (H) Soundwall Height = 10'-0"

Notes:
Traffic will pass through construction site, 15'-0" minimum vertical clearance required under falsework.

Traffic on Palm street will be detoured during the construction of Palm street Overcrossing bridge No. 50-561.

LEGEND:
- ⇨ Indicates Direction of Traffic
- ◒ Indicates Point of Minimum Vertical Clearance
- ▲ Indicates Retaining Wall

ALTERNATIVE C

BE Murray
DESIGN OVERSIGHT
6-22-12
SIGN OFF DATE

DESIGNED BY	K. CHARAN	DATE	04/06/12
DRAWN BY	S. LEE	DATE	04/06/12
CHECKED BY	M. Mohseni	DATE	04/06/12
APPROVED	M. MOHSENI	DATE	04/06/12

Mohsen Mohseni
PROJECT ENGINEER

PLANNING STUDY
PALM STREET UC

BRIDGE NO. 50-XXXXR/L	CU
SCALE: As Noted	EA 06-48460

ADVANCE PLANNING STUDY SHEET (ENGLISH) (REV. 06-01-09)

FILE => C:\PW_WORKING\PtgpWlseb\p0038090\dms90794\Alt C Palm ST UC-GP01.dgn

USERNAME => p0038090 DATE PLOTTED => 4/5/2012 TIME PLOTTED => 12:09:58 PM

PREPARED FOR THE STATE OF CALIFORNIA - DEPARTMENT OF TRANSPORTATION

DIST.	COUNTY	ROUTE	POST MILES TOTAL PROJECT
06	KER	58	33.1/55.4

TRIP
900 Truxtun Ave, Suite 200
Bakersfield, CA 93301

PARSONS
2201 DUPONT DRIVE, SUITE 200
IRVINE, CA 92612

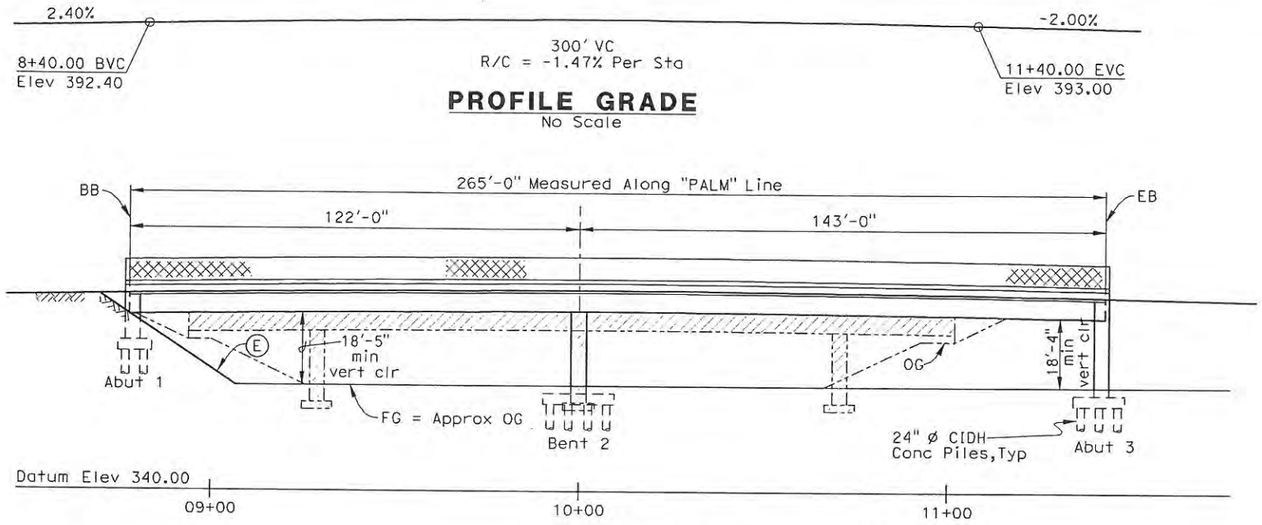

PROFILE GRADE
No Scale

ELEVATION
1" = 20'

NOTE
1. Traffic will pass through "SR 99" Line, 15'-0" mininum vertical clearance required under falsework.
2. Traffic on Palm Steet will be detoured during construction.

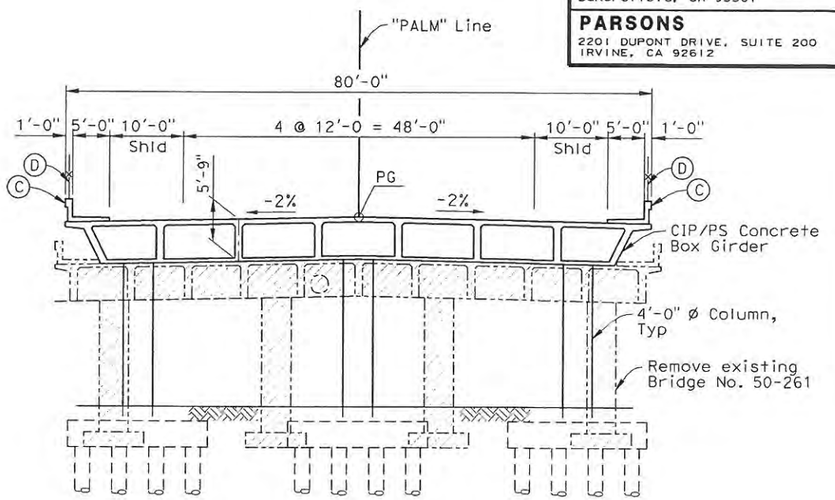

TYPICAL SECTION
1" = 10'

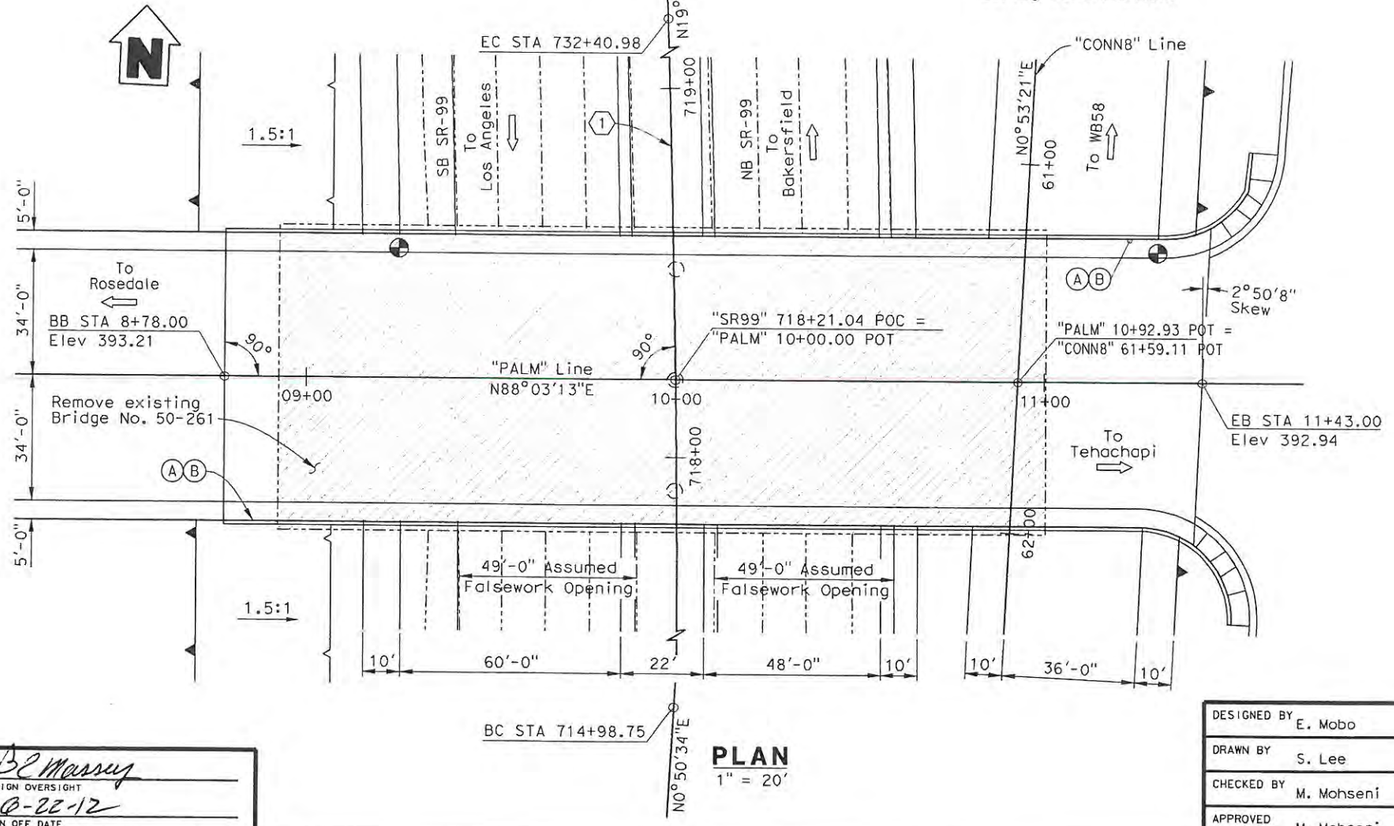

PLAN
1" = 20'

CURVE DATA (1)
R = 4999.78
Δ = 19°57'55"
T = 880.03'
L = 1742.22'

DATE OF ESTIMATE	=	12/15/11
BRIDGE REMOVAL	=	17,195 SF
STRUCTURE DEPTH	=	5'-9"
LENGTH	=	265'-0"
WIDTH	=	80'-0"
AREA	=	21,200 SF
COST/SF INCLUDING 10% MOBILIZATION & 25% CONTINGENCY	=	$207/SF
BRIDGE REMOVAL	=	$430,000
TOTAL COST	=	$4,380,000

NOTES:
- (A) Paint "PALM STREET OC"
- (B) Paint "Bridge No. 50-XXXX"
- (C) Concrete Barrier Type 26
- (D) Chain Link Railing (Type 7)
- (E) Slope Paving

LEGEND:
- Indicates Direction of Traffic
- Indicates Point of Minimum Vertical Clearance
- Indicates Retaining Wall
- Indicates Existing Structure
- Indicates Bridge removal

ALTERNATIVE C

BC Massey
DESIGN OVERSIGHT
6-22-12
SIGN OFF DATE

DESIGNED BY E. Mobo	DATE 12/15/11	Mohsen Mohseni PROJECT ENGINEER	PLANNING STUDY
DRAWN BY S. Lee	DATE 12/15/11		PALM STREET OVERCROSSING (REPLACE)
CHECKED BY M. Mohseni	DATE 12/15/11		BRIDGE NO. 50-XXXX / CU
APPROVED M. Mohseni	DATE 12/15/11		SCALE: As Noted / EA 06-48460

ADVANCE PLANNING STUDY SHEET (ENGLISH) (REV. 06-01-09)

FILE => R:\647531 Centennial Corridor\Drawings\Structural\PALM ST-OC-GP01.dgn

USERNAME => p0038090 DATE PLOTTED => 12/15/2011 TIME PLOTTED => 11:43:00 PM

PREPARED FOR THE STATE OF CALIFORNIA - DEPARTMENT OF TRANSPORTATION

DIST.	COUNTY	ROUTE	POST MILES TOTAL PROJECT
06	KER	58	33.1/55.4

TRIP
900 Truxtun Ave, Suite 200
Bakersfield, CA 93301

PARSONS
2201 DUPONT DRIVE, SUITE 200
IRVINE, CA 92612

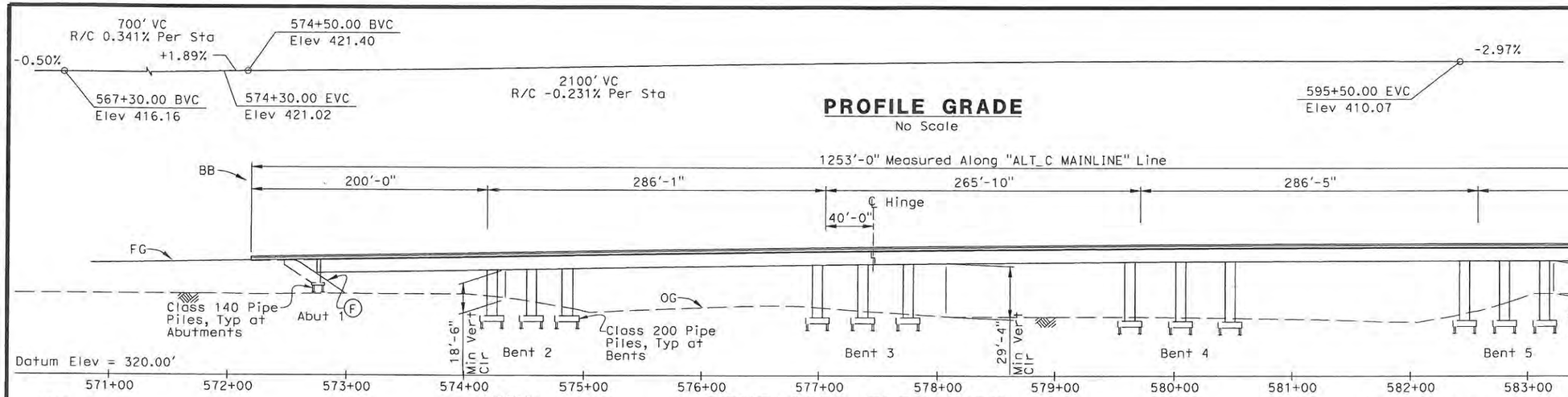

NOTE:

Vehicular traffic will pass through construction (SR-99 & Other Streets). 15'-0" min vert clearance required under falsework.

DATE OF ESTIMATE	= 03/26/12
BRIDGE REMOVAL	= N/A
STRUCTURE DEPTH	= 11'-6"
LENGTH	= 1253'-0"
WIDTH	= 122'-10½"
AREA	= 153,962 SF
COST/SF INCLUDING 10% MOBILIZATION & 25% CONTINGENCY	= $235/SF
TOTAL COST	= $36,250,000

NOTES:

Ⓐ Paint "SR-58/SR-99 Conn Separation"

Ⓑ Paint "Bridge No. 50-xxxx"

Ⓒ Concrete Barrier Type 736

Ⓓ Concrete Barrier Type 60A

Ⓔ Structure Approach Type N(30S)

Ⓕ Slope Paving - Full Slope

Ⓖ Concrete Barrier Type 742

LEGEND:

⇨ Indicates Direction of Traffic

⊕ Indicates Point of Minimum Vertical Clearance

▨ Indicates Closure Pour.

DEVELOPED ELEVATION

1" = 50'

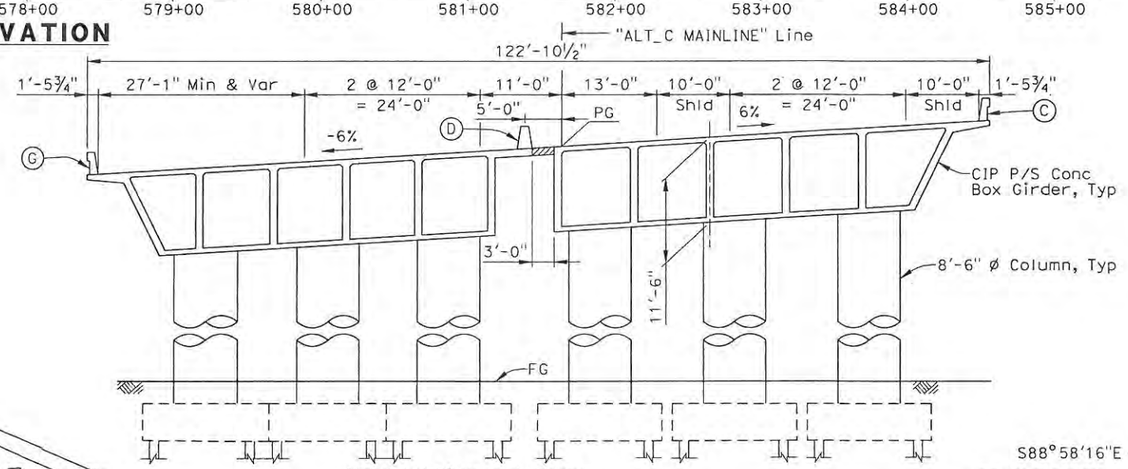

TYPICAL SECTION

1" = 10'

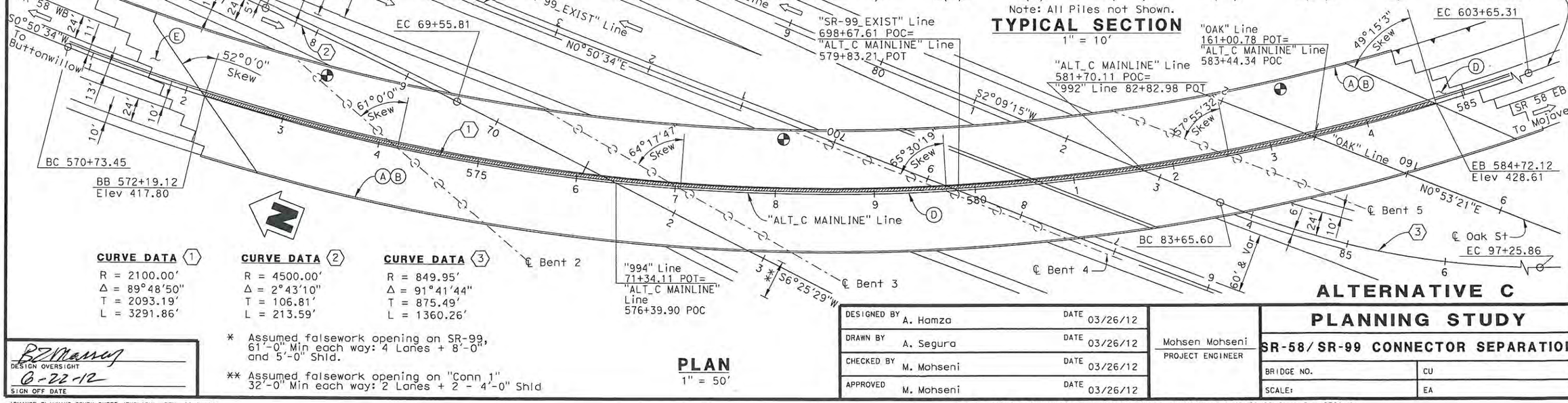

PLAN

1" = 50'

CURVE DATA ① R = 2100.00' Δ = 89°48'50" T = 2093.19' L = 3291.86'

CURVE DATA ② R = 4500.00' Δ = 2°43'10" T = 106.81' L = 213.59'

CURVE DATA ③ R = 849.95' Δ = 91°41'44" T = 875.49' L = 1360.26'

* Assumed falsework opening on SR-99, 61'-0" Min each way: 4 Lanes + 8'-0", and 5'-0" Shld.

** Assumed falsework opening on "Conn 1" 32'-0" Min each way: 2 Lanes + 2 - 4'-0" Shld

ALTERNATIVE C

DESIGNED BY	A. Hamza	DATE	03/26/12
DRAWN BY	A. Segura	DATE	03/26/12
CHECKED BY	M. Mohseni	DATE	03/26/12
APPROVED	M. Mohseni	DATE	03/26/12

Mohsen Mohseni
PROJECT ENGINEER

PLANNING STUDY

SR-58/SR-99 CONNECTOR SEPARATION

BRIDGE NO.	CU
SCALE:	EA

DESIGN OVERSIGHT
6-22-12
SIGN OFF DATE

ADVANCE PLANNING STUDY SHEET (ENGLISH) (REV. 06-01-09)

FILE => C:\PW_WORKING\PtgpWlseb\p0038090\dms90794\Alt C SR 58-99 Conn Sep-GP01.dgn

USERNAME => p0038090 DATE PLOTTED => 3/28/2012 TIME PLOTTED => 11:33:27 AM

PREPARED FOR THE STATE OF CALIFORNIA - DEPARTMENT OF TRANSPORTATION

DIST.	COUNTY	ROUTE	POST MILES TOTAL PROJECT
06	KER	58	33.1/55.4

TRIP
900 Truxtun Ave, Suite 200
Bakersfield, CA 93301

PARSONS
2201 DUPONT DRIVE, SUITE 200
IRVINE, CA 92612

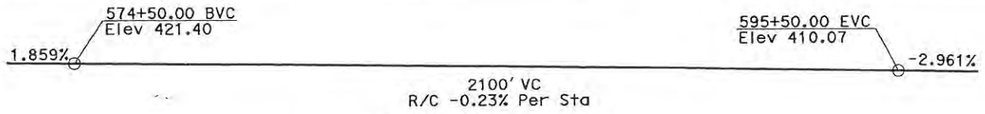

PROFILE GRADE
No Scale

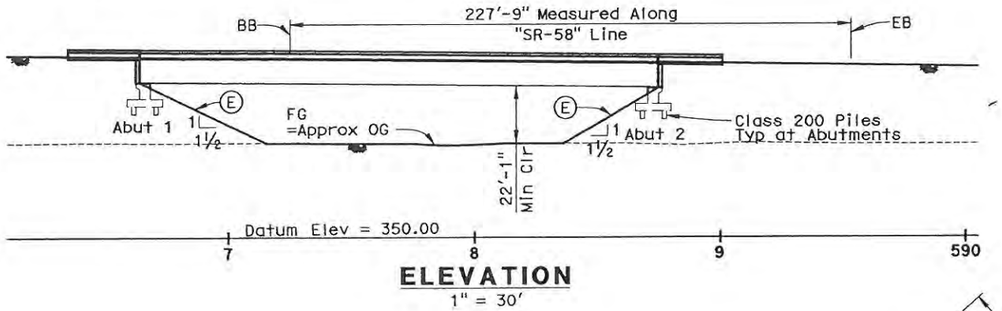

ELEVATION
1" = 30'

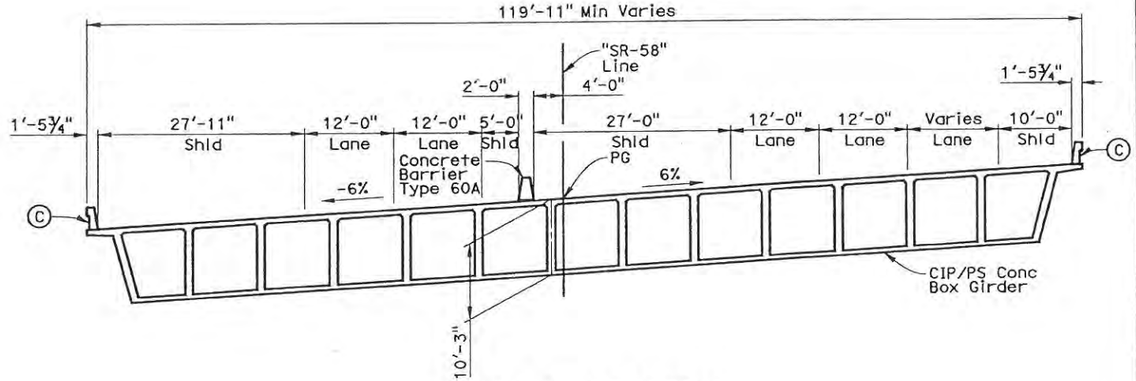

TYPICAL SECTION
1" = 10'

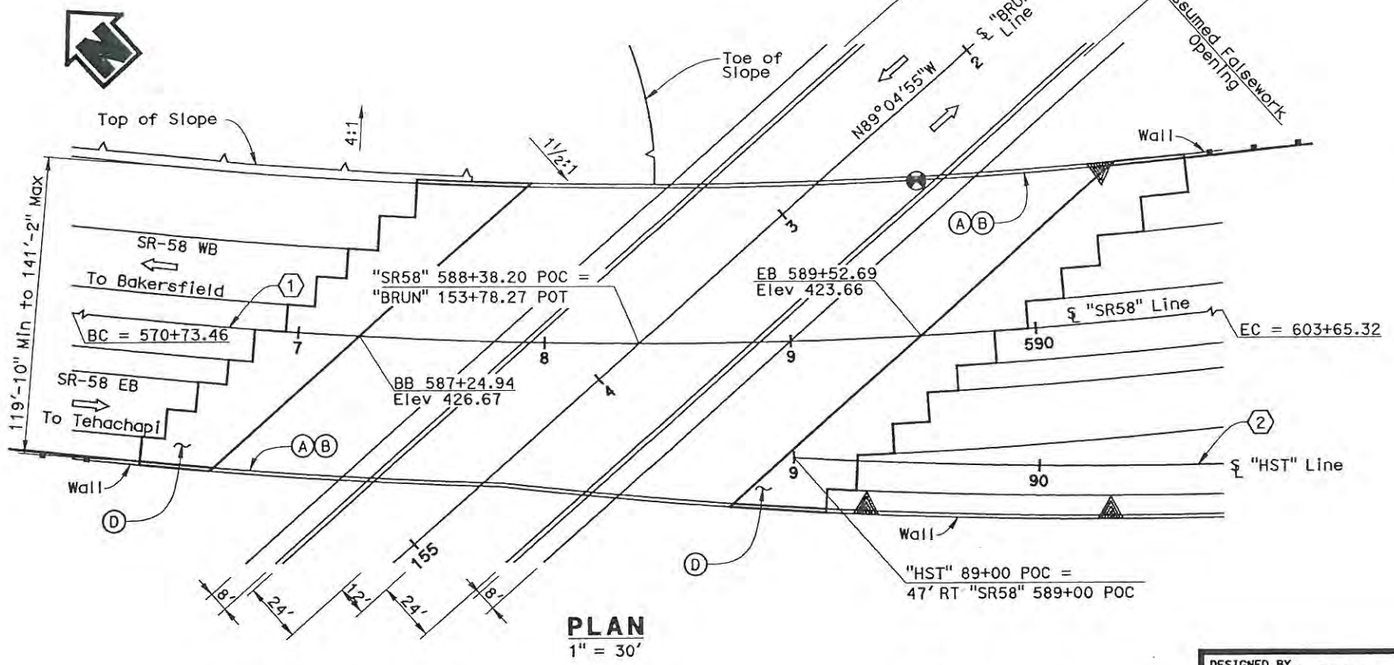

PLAN
1" = 30'

NOTES:

Ⓐ Paint "Brundage Lane Undercrossing"
Ⓑ Paint "Bridge No. 50-XXXX"
Ⓒ Concrete Barrier Type 736
Ⓓ Structure Approach Type N(30S)
Ⓔ Slope Paving

DATE OF ESTIMATE	= 12/14/11
STRUCTURE DEPTH	= 10'-3"
LENGTH	= 227'-9"
WIDTH	= 133'-6"
AREA	= 30,400 SF
COST/SF INCLUDING 10% MOBILIZATION & 25% CONTINGENCY	= $ 235
TOTAL COST	= $ 7,150,000

LEGEND:

⇨ Indicates Direction of Traffic
⊗ Indicates Point of Mininmum Vertical Clearance
MBGR

CURVE DATA ①
R = 2,100.00'
△ = 89°48'50"
T = 2093.19'
L = 3291.86'

CURVE DATA ②
R = 2,147.00'
△ = 7°16'12"
T = 136.39'
L = 272.42'

Note:
Traffic will pass through construction site, 15'-0" minimum vertical clearance required under falsework.

ALTERNATIVE C

DESIGN OVERSIGHT
6-2012
SIGN OFF DATE

DESIGNED BY	C. Parker	DATE	11/21/11
DRAWN BY	C. Parker	DATE	11/21/11
CHECKED BY	R. Mothe	DATE	11/21/11
APPROVED	M. Mohseni	DATE	12/14/11

Mohsen Mohseni
PROJECT ENGINEER

PLANNING STUDY
BRUNDAGE LANE UC

BRIDGE NO. 50-XXXX	CU
SCALE: As Noted	EA 06-48460

FILE => H:\646593_CENTENNIAL\SHT\STRUCTURES\APS\Brundage Lane UC\Alt C\50-XXXX-a-gp01.dgn

USERNAME => p0021213 DATE PLOTTED => 12/15/2011 TIME PLOTTED => 2:02:30 PM

ADVANCE PLANNING STUDY SHEET (SWB15H) (REV. 06-01-09)

PREPARED FOR THE STATE OF CALIFORNIA - DEPARTMENT OF TRANSPORTATION

DIST.	COUNTY	ROUTE	POST MILES TOTAL PROJECT
06	KER	58	33.1/55.4

TRIP
900 Truxtun Ave, Suite 200
Bakersfield, CA 93301

PARSONS
2201 DUPONT DRIVE, SUITE 200
IRVINE, CA 92612

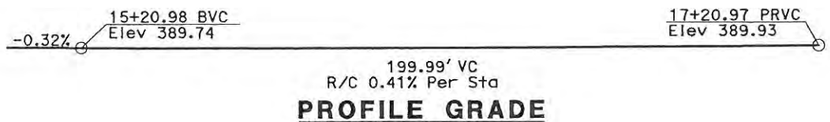

PROFILE GRADE
No Scale

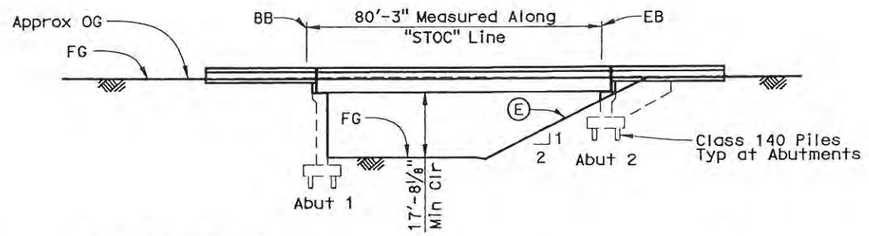

ELEVATION
1" = 20'

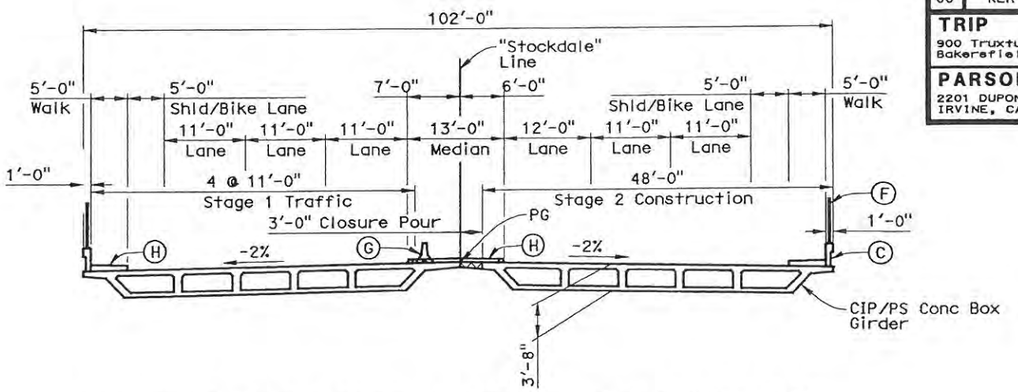

TYPICAL SECTION - STAGE 2 CONSTRUCTION
1" = 10'

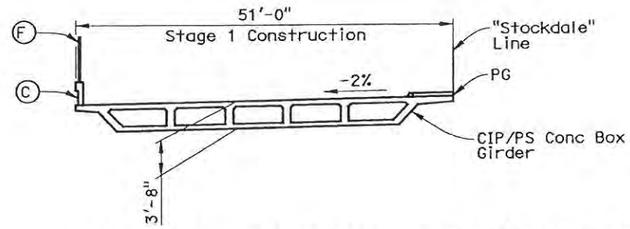

TYPICAL SECTION - STAGE 1 CONSTRUCTION
1" = 10'

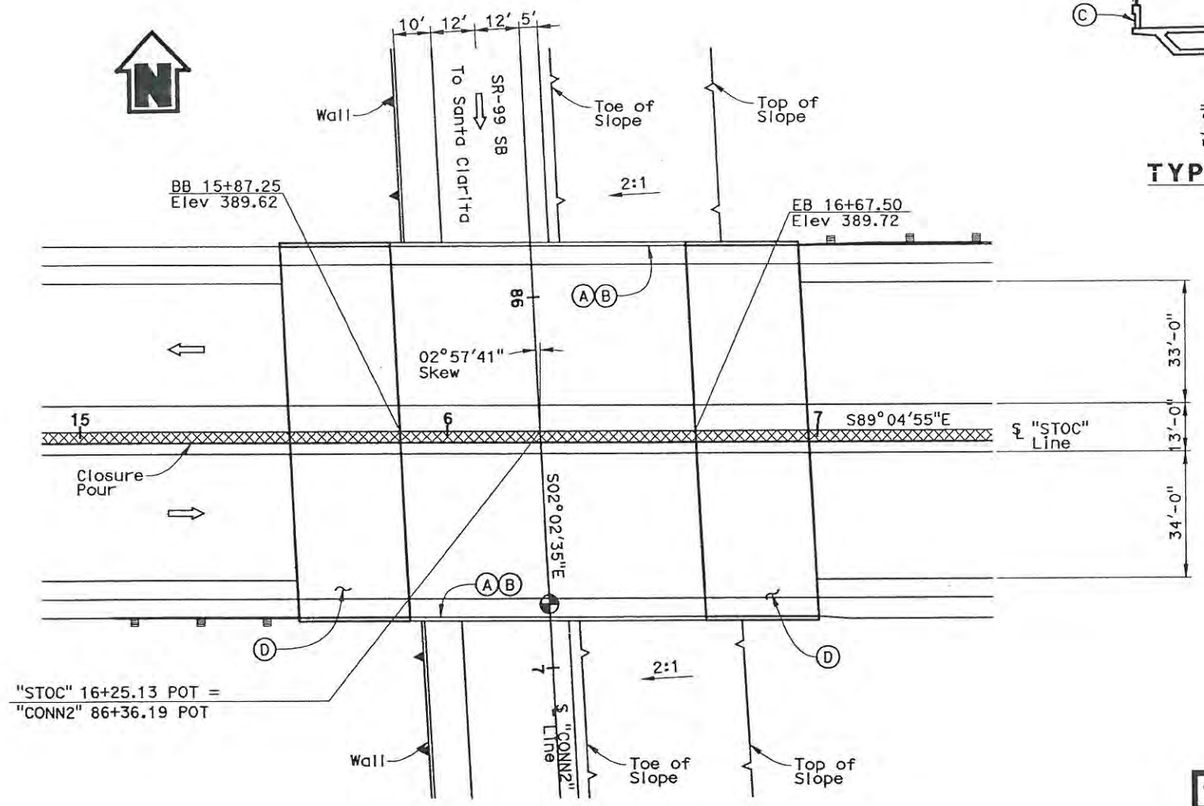

PLAN
1" = 20'

Note:
Traffic will not pass through construction site. No falsework opening is required.

NOTES:

(A) Paint "Stockdale Highway Overcrossing"
(B) Paint "Bridge No. 50-XXXX"
(C) Concrete Barrier Type 26
(D) Structure Approach Type N(30S)
(E) Slope Paving
(F) Chain Link Fence Type 7
(G) Temporary Railing Type K
(H) To Be Placed After Closure Pour

LEGEND:

- Indicates Direction of Traffic
- Indicates Point of Mininmum Vertical Clearance
- MBGR
- Closure Pour

DATE OF ESTIMATE	= 12/14/11
STRUCTURE DEPTH	= 3'-8"
LENGTH	= 80'-3"
WIDTH	= 102'-0"
AREA	= 8,186 SF
COST/SF INCLUDING 10% MOBILIZATION & 25% CONTINGENCY	= $ 282
TOTAL COST	= $ 2,310,000

ALTERNATIVE C

B Massey
DESIGN OVERSIGHT
6-22-12
SIGN OFF DATE

DESIGNED BY	C. Parker	DATE	11/21/11
DRAWN BY	C. Parker	DATE	11/21/11
CHECKED BY	R. Mothe	DATE	11/21/11
APPROVED	M. Mohseni	DATE	12/14/11

Mohsen Mohseni
PROJECT ENGINEER

PLANNING STUDY
STOCKDALE HWY OC

BRIDGE NO. 50-XXXX	CU
SCALE: As Noted	EA 06-48460

ADVANCE PLANNING STUDY SHEET (ENGLISH) (REV. 06-01-09)

FILE => H:\646593_CENTENNIAL\SHT\STRUCTURES\APS\Stockdale Hwy UC\Alt C\50-XXXX-a-gp01.dgn

USERNAME => p0021213 DATE PLOTTED => 12/15/2011 TIME PLOTTED => 2:06:18 PM

PREPARED FOR THE STATE OF CALIFORNIA - DEPARTMENT OF TRANSPORTATION

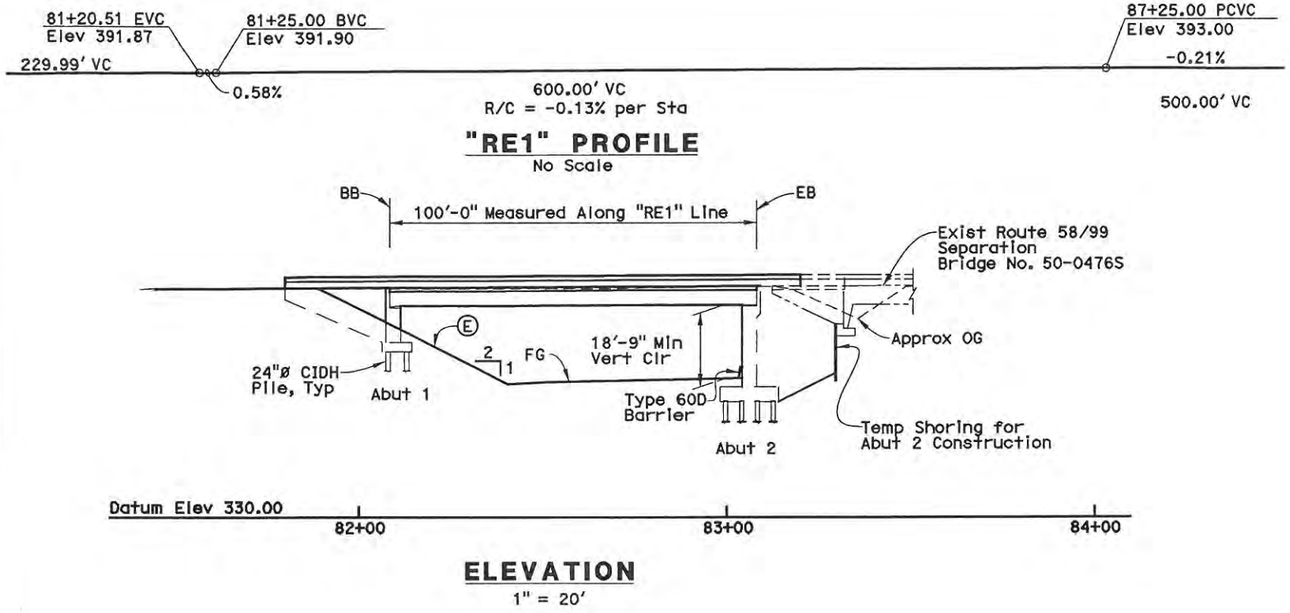

"RE1" PROFILE
No Scale

ELEVATION
1" = 20'

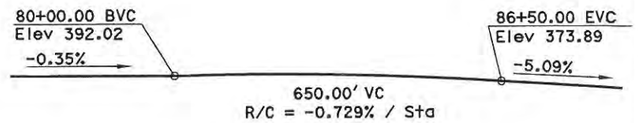

"991" PROFILE
No Scale

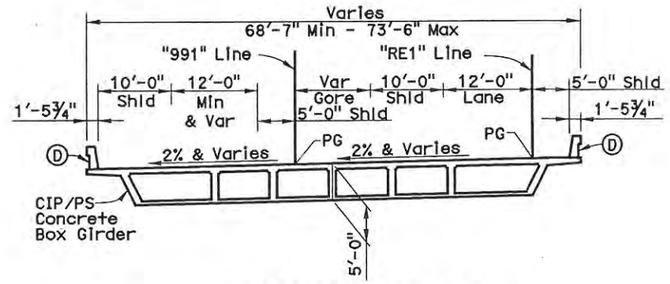

TYPICAL SECTION
Looking Upstation at "RE1"
1" = 10'

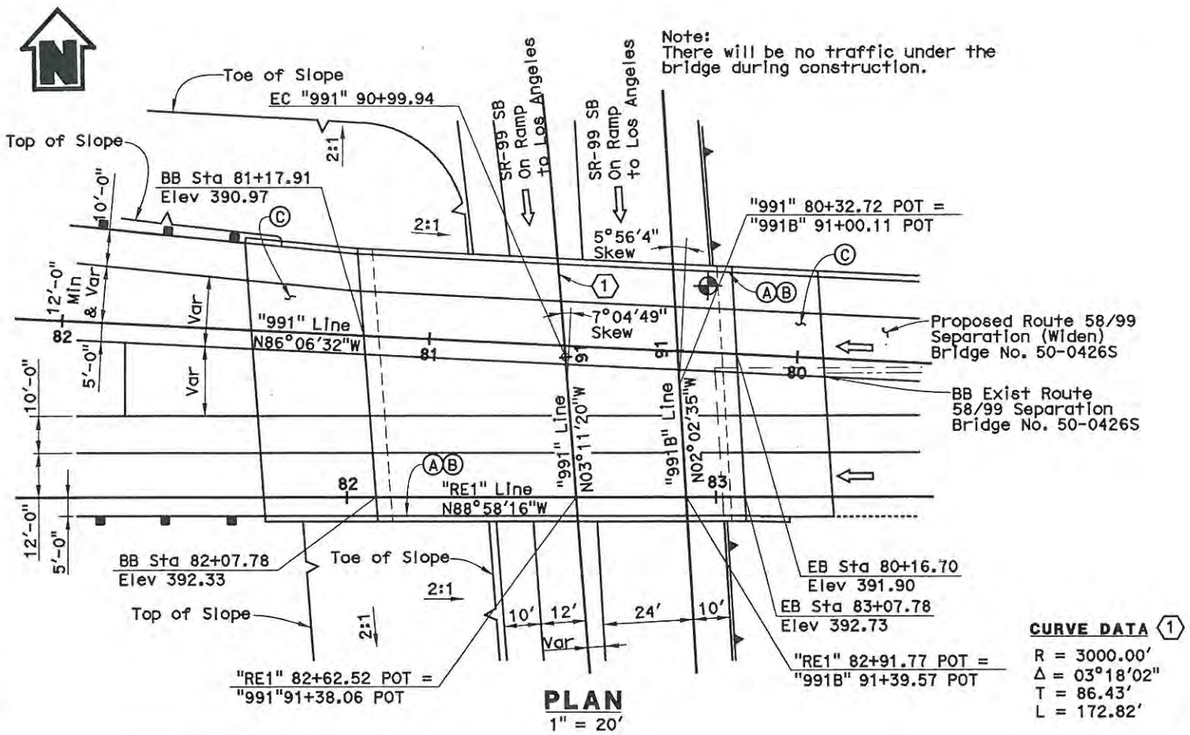

PLAN
1" = 20'

CURVE DATA (1)
R = 3000.00'
Δ = 03°18'02"
T = 86.43'
L = 172.82'

NOTES
- (A) Paint "WB SR-58/SR-99 CONNECTOR OC"
- (B) Paint "Br. No. 50-XXXX"
- (C) Structure Approach Type N(30S)
- (D) Concrete Barrier Type 736
- (E) Slope Paving

LEGEND
- Indicates Existing Bridge
- Indicates Direction of Traffic
- Indicates Point of Minimum Vertical Clearance
- Retaining Wall
- MBGR

DATE OF ESTIMATE	4-2-12
BRIDGE REMOVAL	= 1680 SF
STRUCTURE DEPTH	= 5'-0"
LENGTH	= 100'-0"
WIDTH	= 68'-7" Min & Varies
AREA	= 7,167 SF
COST/SF INCLUDING 10% MOBILIZATION & 25% CONTINGENCY BRIDGE REMOVAL	= $318/SF
TOTAL COST	= $2,280,000

DIST.	COUNTY	ROUTE	POST MILES TOTAL PROJECT
06	KER	58	T31.7/R55.6

CITY OF BAKERSFIELD

PARSONS 2201 DUPONT DRIVE SUITE 200 IRVINE, CA 92612

ALTERNATIVE C

PLANNING STUDY

WB SR-58/SB SR-99 CONN OC

BRIDGE NO. 50-XXXX	CU
SCALE: As Noted	EA 06-48460

DESIGNED BY D. LING	DATE 4/2/12	MOHSEN MOHSENI, PROJECT ENGINEER
DRAWN BY P. Johnson	DATE 4/3/12	
CHECKED BY C. Roberts	DATE 4/4/12	
APPROVED M. Mohseni	DATE 4/6/12	

DESIGN OVERSIGHT
6-22-12
SIGN OFF DATE

ADVANCE PLANNING STUDY SHEET (ENGLISH) (REV. 06-01-09)

FILE => c:\pw_working\ptgpwiseb\36671\dms93466\55-xxx-a-gp01.dgn

USERNAME => 36671 DATE PLOTTED => 4/11/2012 TIME PLOTTED => 8:47:18 AM

PREPARED FOR THE STATE OF CALIFORNIA - DEPARTMENT OF TRANSPORTATION

DIST.	COUNTY	ROUTE	POST MILES TOTAL PROJECT
06	KER	58	T31.7/R55.4

TRIP
900 Truxtun Ave, Suite 200
Bakersfield, CA 93301

PARSONS
2201 DUPONT DRIVE, SUITE 200
IRVINE, CA 92612

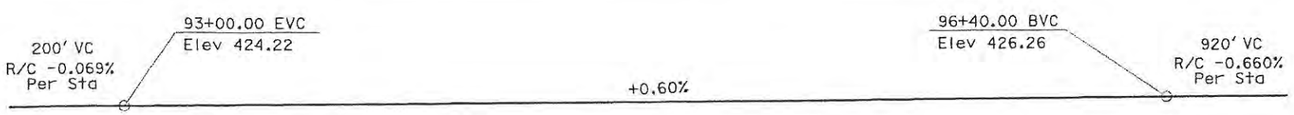

PROFILE GRADE
No Scale

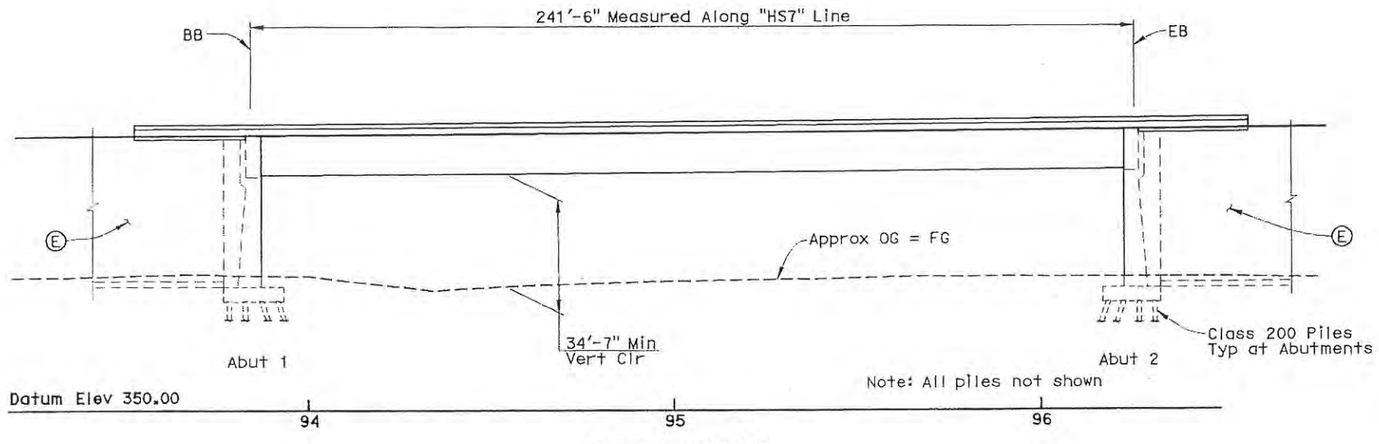

ELEVATION
1" = 20'

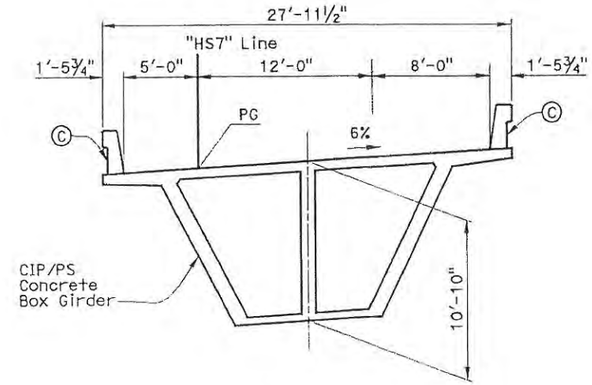

TYPICAL SECTION
1" = 5'

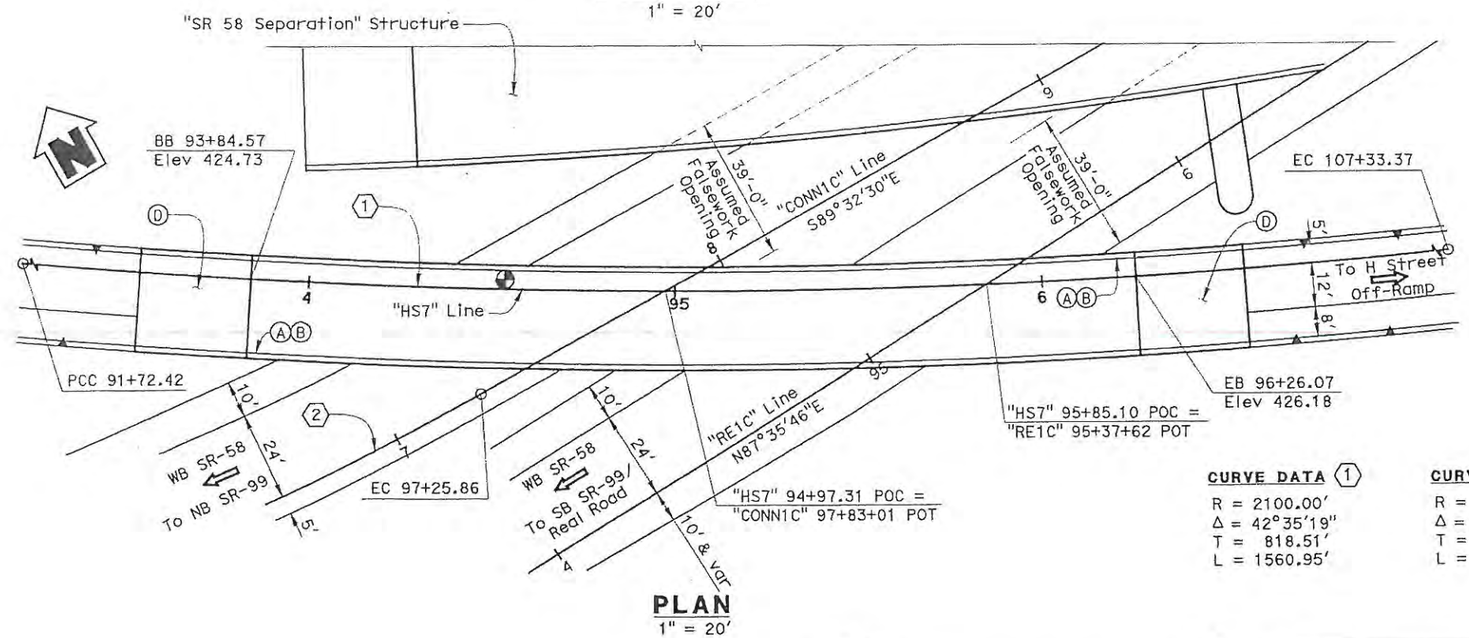

PLAN
1" = 20'

CURVE DATA (1)
R = 2100.00'
Δ = 42°35'19"
T = 818.51'
L = 1560.95'

CURVE DATA (2)
R = 849.95'
Δ = 91°41'44"
T = 875.49'
L = 1360.26'

NOTES
- (A) Paint "EB SR-58 On-Ramp Connector Separation"
- (B) Paint "Br. No. 50-xxxx"
- (C) Concrete Barrier Type 736
- (D) Structure Approach, Type N(30S)
- (E) Retaining Wall

LEGEND
- Indicates Direction of Traffic
- Indicates Point of Minimum Vertical Clearance
- Denotes Retaining Wall

DATE OF ESTIMATE	1-03-12
STRUCTURE DEPTH	= 10'-10"
LENGTH	= 241'-6"
WIDTH	= 27'-11½"
AREA	= 6751 SF
COST/SF INCLUDING 10% MOBILIZATION & 25% CONTINGENCY	= $262
TOTAL COST	= $1,770,000

Note:
Vehicular traffic will pass through construction.
(15'-0" min vert clearance required under falsework)

ALTERNATIVE C

DESIGNED BY J. Fix	DATE 12/23/11	Mohsen Mohseni PROJECT ENGINEER	**PLANNING STUDY**
DRAWN BY A. Segura	DATE 12/23/11		**EB SR-58 ON-RAMP CONNECTOR SEPARATION**
CHECKED BY M. Mohseni	DATE		BRIDGE NO. 50-XXXX / CU
APPROVED M. Mohseni	DATE		SCALE: As Noted / EA 06-48460

DESIGN OVERSIGHT
SIGN OFF DATE
6-22-12

ADVANCE PLANNING STUDY SHEET (ENGLISH) (REV. 06-01-09)

FILE => H:\646593_CENTENNIAL\SHT\STRUCTURES\APS\EB SR58 On-Ramp Connector Sep\Alt C\50-xxxx-a-gp01.dgn

USERNAME => p0036016 DATE PLOTTED => 1/12/2012 TIME PLOTTED => 9:47:43 AM

PREPARED FOR THE STATE OF CALIFORNIA - DEPARTMENT OF TRANSPORTATION

DIST.	COUNTY	ROUTE	POST MILES TOTAL PROJECT
06	KER	58	T31.7/R55.6

TRIP
900 Truxtun Ave, Suite 200
Bakersfield, CA 93301

PARSONS
2201 DUPONT DRIVE, SUITE 200
IRVINE, CA 92612

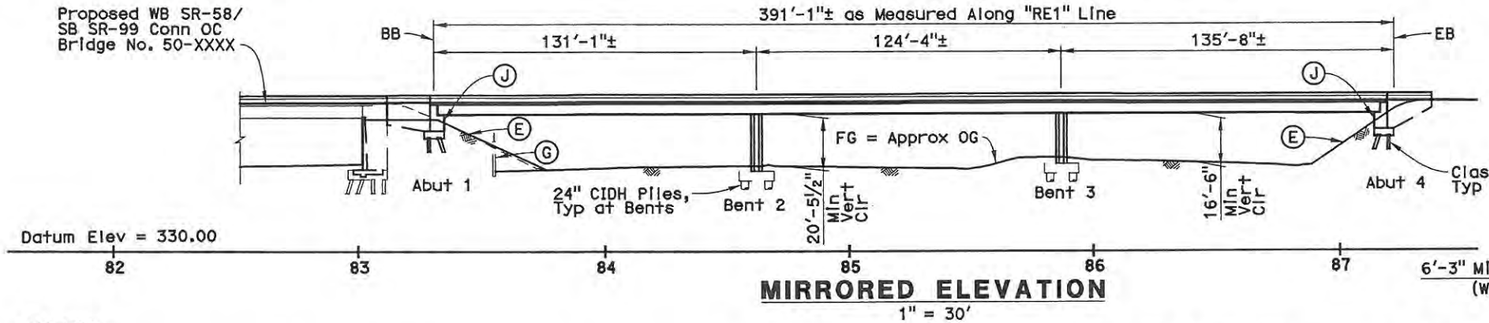

MIRRORED ELEVATION
1" = 30'

NOTES:

- (A) Paint "ROUTE 58/99 SEPARATION"
- (B) Paint "Bridge No. 50-0426 S"
- (C) Concrete Barrier Type 736
- (D) Structure Approach Type N(30S)
- (E) Slope Paving
- (F) Temporary Railing Type K
- (G) Proposed Tieback Wall No. 685
- (H) Seismic Retrofit: FRP Composite Column Casing
- (I) Cut and remove 4" thick of Exist Concrete & Column Flare Rebars. Protect in place 6'-0" ø Octagonal Column Core & Fill Gap with Polystyrene, Typical for all Exist Columns
- (J) Exist Abutment Diaphragm Seismic Retrofit

DATE OF ESTIMATE	=	3/28/12
BRIDGE REMOVAL	=	1562 SF
STRUCTURE DEPTH	=	5'-0"
LENGTH	=	391'-1"±
WIDTH	=	VARIES
AREA	=	7,937 SF
COST/SF INCLUDING 10% MOBILIZATION & 25% CONTINGENCY	=	$ 278
BRIDGE REMOVAL	=	$ 38,500
SEISMIC RETROFIT	=	$ 338,126
TOTAL COST	=	$ 2,210,000

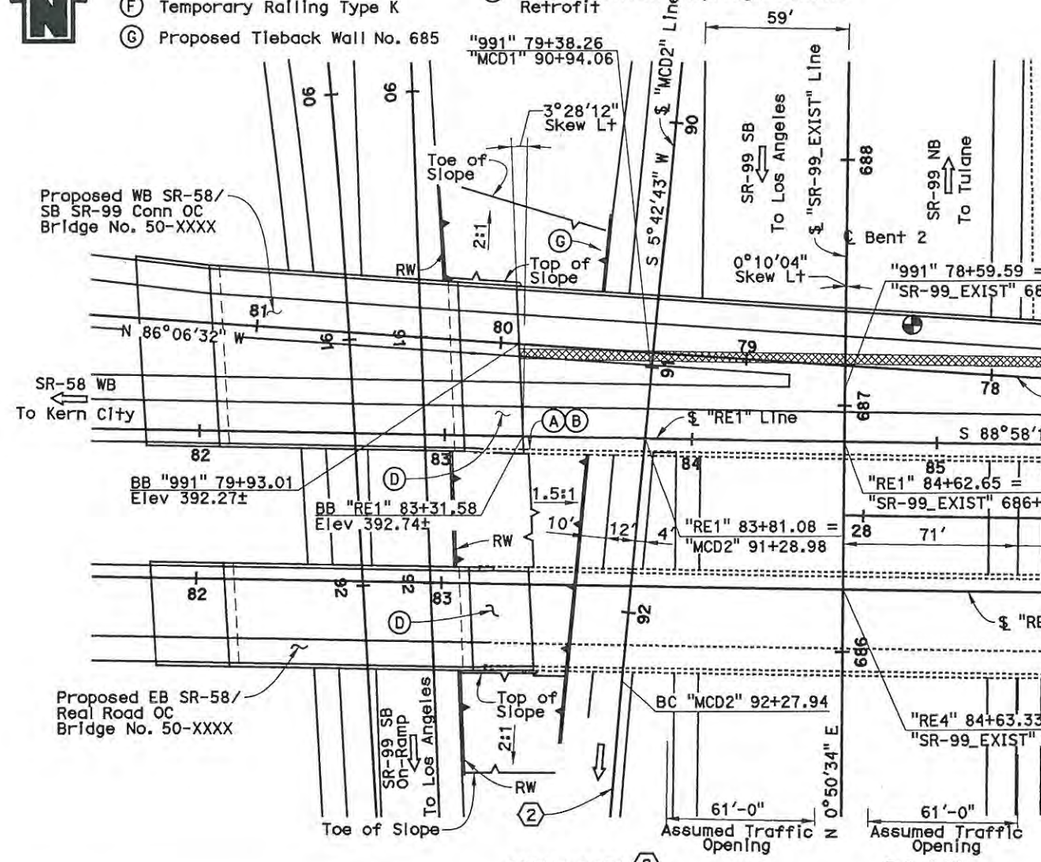

PLAN
1" = 30'

CURVE DATA (2)
R = 2,700.00'
△ = 7°45'18"
T = 183.00'
L = 365.45'

Note:
1. Traffic will Pass Through Construction Site, 15'-0" minimum vertical clearance required under Falsework.

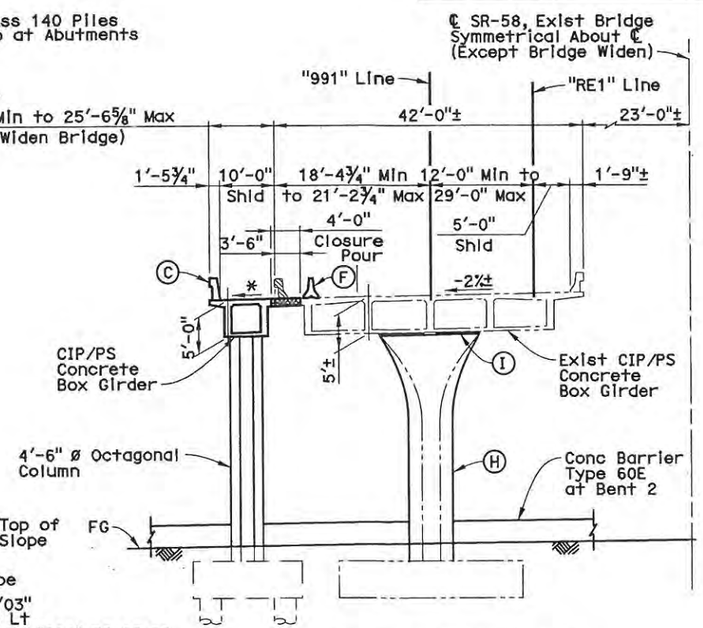

* Match Exist Cross Slope
Note: All Piles not Shown.

TYPICAL SECTION
1" = 10'

LEGEND:
- Indicates Direction of Traffic
- Indicates Point of Minimum Vertical Clearance over SR-99
- Indicates Point of Minimum Vertical Clearance over Wible Rd
- Indicates Exist Point of Minimum Vertical Clearance 17'-2"±
- MBGR
- Indicates Retaining Wall
- Remove Bridge (Portion)
- Closure Pour

"991" 74+81.67 POB =
12.00' Lt "RE1" 88+40.00 POT

ALTERNATIVE C

DESIGNED BY M. Ruvalcava	DATE 3/28/12	Mohsen Mohseni PROJECT ENGINEER	**PLANNING STUDY**
DRAWN BY J. Gilmore	DATE 3/28/12		**ROUTE 58/99 SEPARATION (WIDEN)**
CHECKED BY Z. Strong	DATE 4/1/12		BRIDGE NO. 50-0426S / CU
APPROVED M. Mohensi	DATE 4/6/12		SCALE: As Noted / EA 06-48460

B Z Massey
DESIGN OVERSIGHT
6-22-12
SIGN OFF DATE

ADVANCE PLANNING STUDY SHEET (ENGLISH) (REV. 06-01-09)

FILE => c:\pw_working\ptgpwiseb\36671\dms92611\xx-xxxx-a-gp01.dgn

USERNAME => 36671 DATE PLOTTED => 4/9/2012 TIME PLOTTED => 3:10:32 PM

PREPARED FOR THE STATE OF CALIFORNIA - DEPARTMENT OF TRANSPORTATION

DIST.	COUNTY	ROUTE	POST MILES TOTAL PROJECT
06	KER	58	T52.36/R55.4

TRIP
900 Truxtun Ave, Suite 200
Bakersfield, CA 93301

PARSONS
2201 DUPONT DRIVE, SUITE 200
IRVINE, CA 92612

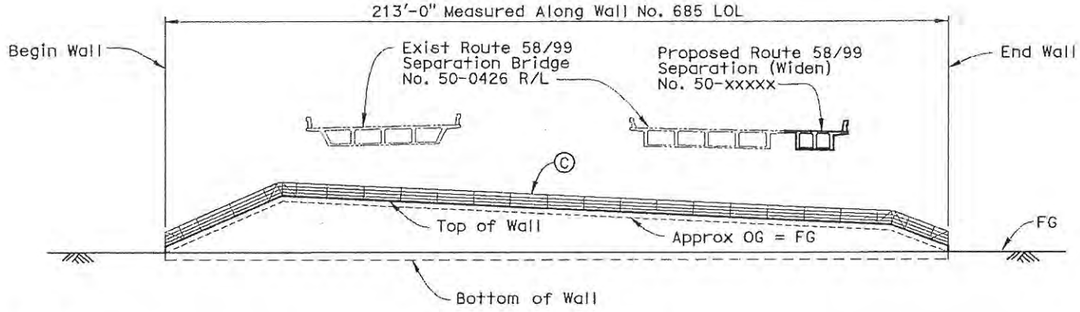

ELEVATION A-A

1" = 20'

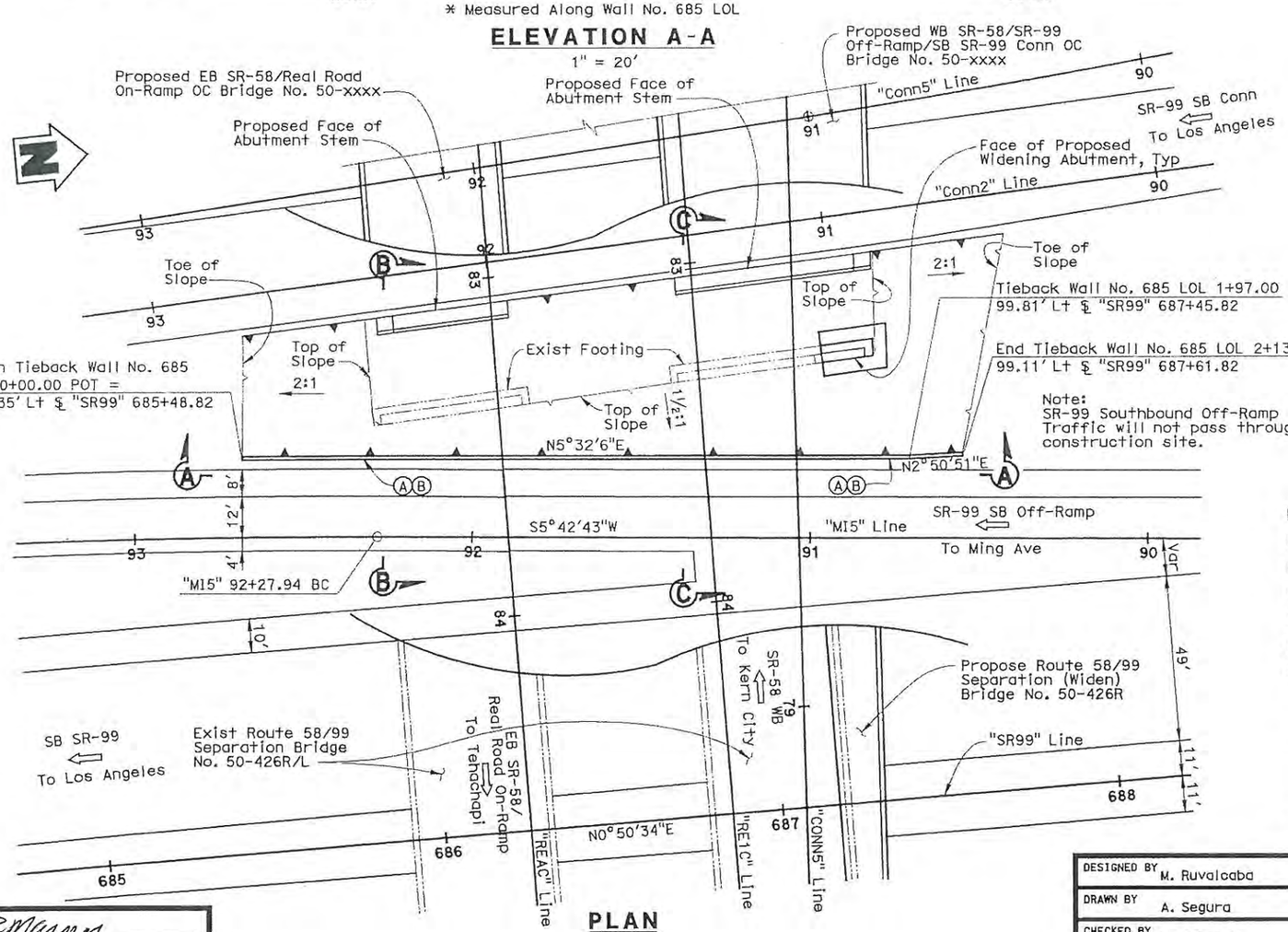

PLAN

1" = 20'

Note:
SR-99 Southbound Off-Ramp Traffic will not pass through construction site.

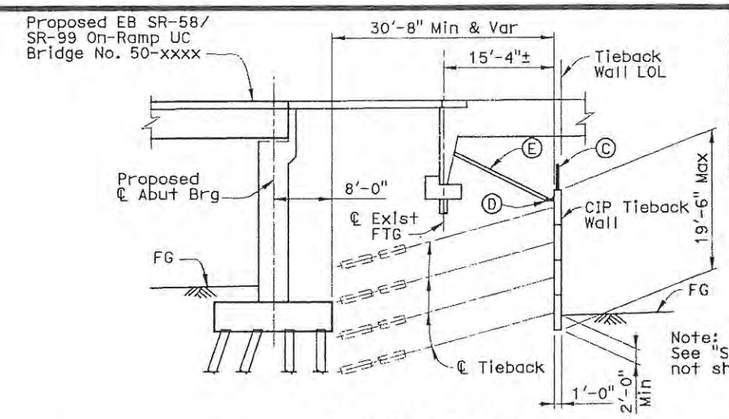

Note:
See "Section C-C" for information not shown.

SECTION B-B

1" = 10'

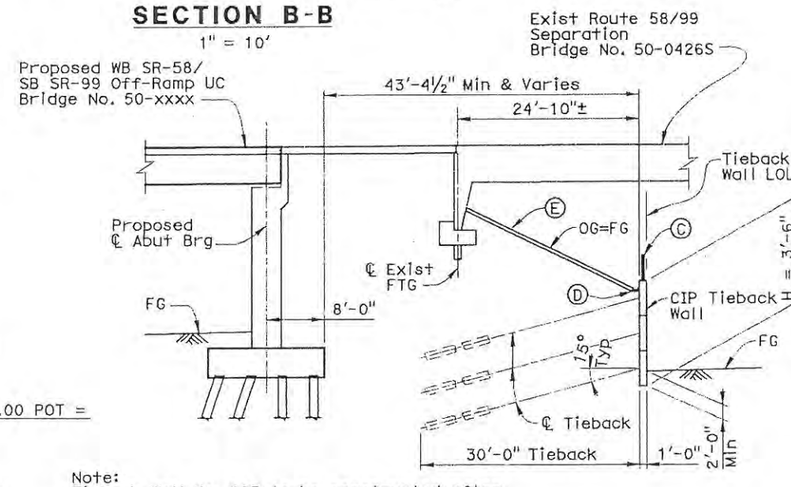

Note:
Tieback Wall No. 685 to be constructed after the proposed WB SR-58/SB SR-99 On-Ramp UC & Route 58/99 Separation (Widen) is constructed.

SECTION C-C

1" = 10'

NOTES

- (A) Paint "Tieback Wall No. 685"
- (B) Paint "Bridge No. 50-xxx"
- (C) 3'-6" Cable Railing
- (D) FL Gutter
- (E) Slope Paving
- (F) Remove and replace portion of Exist slope paving

LEGEND

- Indicates Existing Bridge
- Indicates Direction of Traffic
- Retaining Wall

DATE OF ESTIMATE	12-23-11
BRIDGE REMOVAL	= N/A
STRUCTURE DEPTH	= N/A
LENGTH	= 213'-0"
HEIGHT (Avg)	= 12'-7"
AREA	= 2,680 SF
COST/SF INCLUDING 10% MOBILIZATION & 25% CONTINGENCY BRIDGE REMOVAL	= $235/SF
TOTAL COST	= $630,000

ALTERNATIVE C

DESIGN OVERSIGHT
6-28-12
SIGN OFF DATE

DESIGNED BY	M. Ruvalcaba	DATE	12/22/11
DRAWN BY	A. Segura	DATE	12/28/11
CHECKED BY	M. Mohseni	DATE	1/03/12
APPROVED	S. Dulor	DATE	1/09/12

Mohsen Mohseni
PROJECT ENGINEER

PLANNING STUDY
ROUTE 58/99 SEPARATION
TIEBACK WALL NO. 685

BRIDGE NO. 50-XXX	CU
SCALE: As Noted	EA 06-48460

ADVANCE PLANNING STUDY SHEET (ENGLISH) (REV. 06-01-09)

FILE => H:\646593_CENTENNIAL\SHT\STRUCTURES\APS\Route 58_99 Sep Tieback wall\5x_xxx_gp01.dgn

USERNAME => p0038016 DATE PLOTTED => 1/12/2012 TIME PLOTTED => 9:22:45 AM

PREPARED FOR THE STATE OF CALIFORNIA - DEPARTMENT OF TRANSPORTATION

DIST.	COUNTY	ROUTE	POST MILES TOTAL PROJECT
06	KER	58	

CITY OF BAKERSFIELD

PARSONS 2201 DUPONT DRIVE SUITE 200 IRVINE, CA 92612

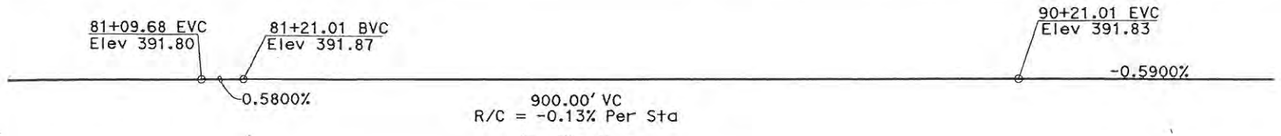

PROFILE
1" = 20'

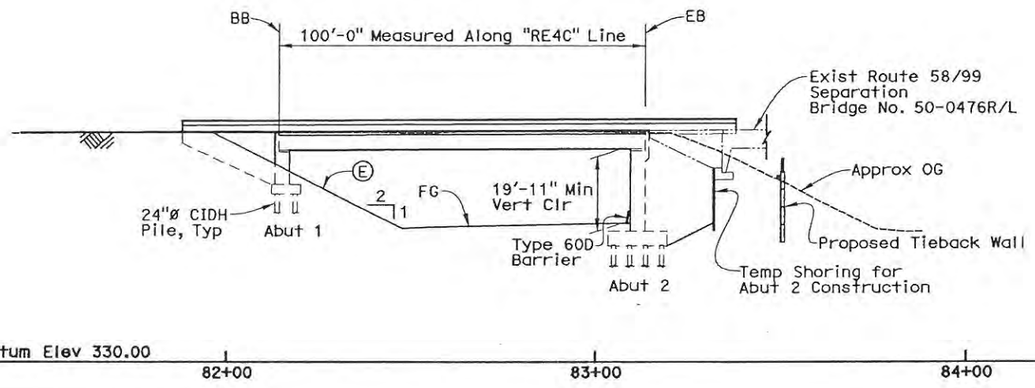

ELEVATION
1" = 20'

Note:
There will be no traffic under the bridge during construction.

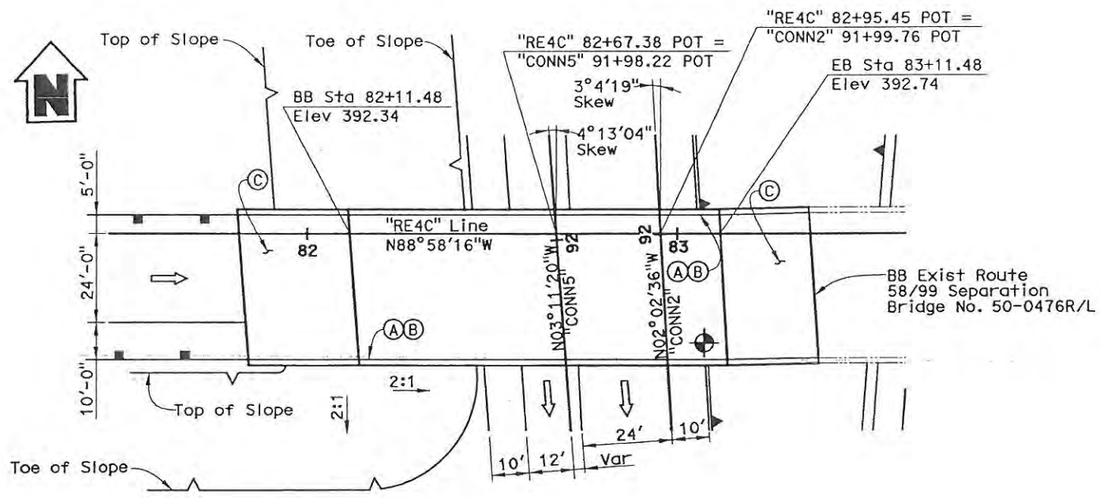

PLAN
1" = 20'

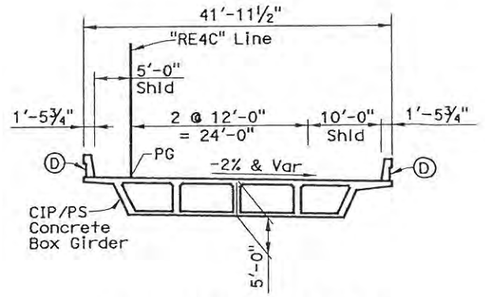

TYPICAL SECTION
1" = 10'

NOTES

(A) Paint "EB SR-58/SR-99 ON RAMP UC"
(B) Paint "Br. No. 50XXXX"
(C) Structure Approach, Type N(30S)
(D) Concrete Barrier Type 736
(E) Slope Paving

LEGEND

- Indicates Existing Bridge
- Indicates Direction of Traffic
- Indicates Point of Minimum Vertical Clearance
- Retaining Wall
- MBGR

DATE OF ESTIMATE	1-13-12
BRIDGE REMOVAL	= 840 SF (Approach Slab)
STRUCTURE DEPTH	= 5'-0"
LENGTH	= 100'-0"
WIDTH	= 41'-11½"
AREA	= 4,196 SF
COST/SF INCLUDING 10% MOBILIZATION & 25% CONTINGENCY BRIDGE REMOVAL	= $276/SF
TOTAL COST	= $1,160,000

ALTERNATIVE C

DESIGNED BY	D. LING	DATE	01/13/12
DRAWN BY	P. Johnson	DATE	01/13/12
CHECKED BY	S. Dulor	DATE	01/13/12
APPROVED	M. Mohseni	DATE	01/13/12

MOHSEN MOHSENI
PROJECT ENGINEER

PLANNING STUDY

EB SR-58/REAL ROAD ON-RAMP OC

BRIDGE NO. 50-XXXX	CU
SCALE: As Noted	EA 06-48460

B D Mansey
DESIGN OVERSIGHT
6-22-12
SIGN OFF DATE

ADVANCE PLANNING STUDY SHEET (ENGLISH) (REV. 06-01-09)

FILE => $REQUEST

DATE PLOTTED => $DATE
TIME PLOTTED => $TIME
USERNAME => $USER

PREPARED FOR THE STATE OF CALIFORNIA - DEPARTMENT OF TRANSPORTATION

DIST.	COUNTY	ROUTE	POST MILES TOTAL PROJECT
06	KER	58	T52.36/R55.4

TRIP
900 Truxtun Ave, Suite 200
Bakersfield, CA 93301

PARSONS
2201 DUPONT DRIVE, SUITE 200
IRVINE, CA 92612

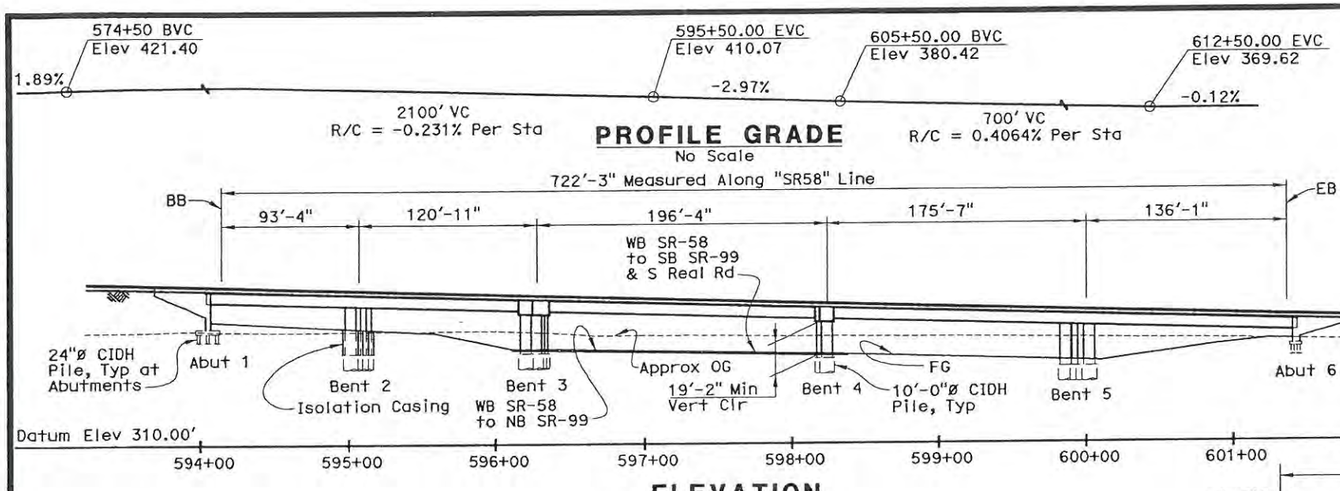

PROFILE GRADE
No Scale

ELEVATION
1" = 50'

DATE OF ESTIMATE	12-29-11
BRIDGE REMOVAL	= N/A
STRUCTURE DEPTH	= 7'-10"
LENGTH	= 722'-3"
WIDTH	= 122'-10"
AREA	= 88,714 SF
COST/SF INCLUDING 10% MOBILIZATION & 25% CONTINGENCY	= $213/SF
TOTAL COST	= $18,940,000

Note:
Traffic will pass through construction site, 15'-0" minimum vertical clearance required under falsework.

LEGEND

- ⇦ Indicates Direction of traffic
- ⊕ Indicates Point of Minimum Vertical Clearance
- ◆——◆ Indicates Barrier Type 60A - See "Road Plans"
- ▲—— Indicates Retaining Wall - See "Road Plans"

NOTES:

Ⓐ Paint "SR-58 Separation"
Ⓑ Paint "Bridge No. 50-xxxx"
Ⓒ Concrete Barrier Type 736
Ⓓ Structure Approach, Type N(30S)
Ⓔ Concrete Barrier Type 60A

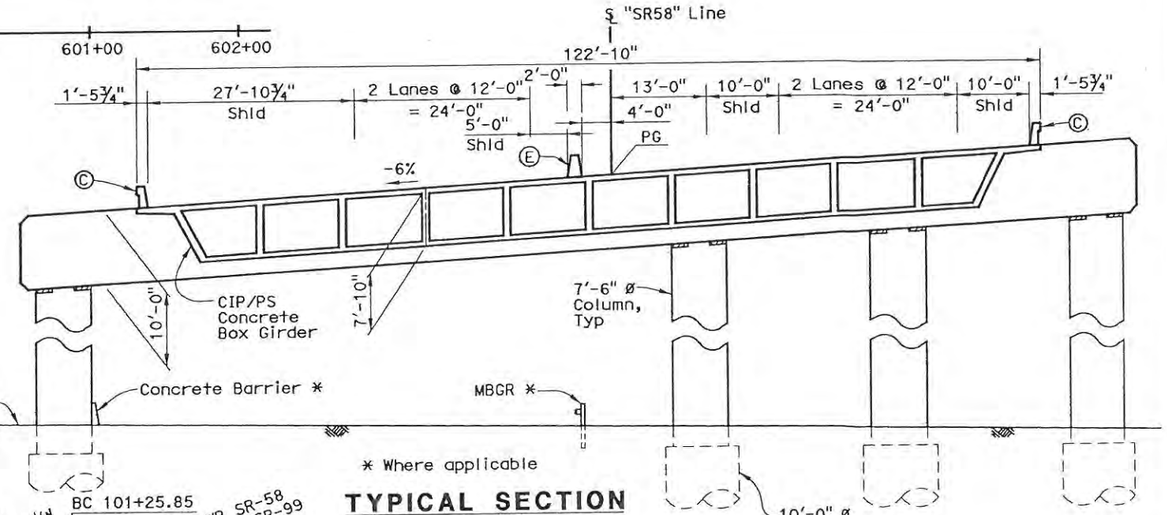

TYPICAL SECTION
1" = 10'

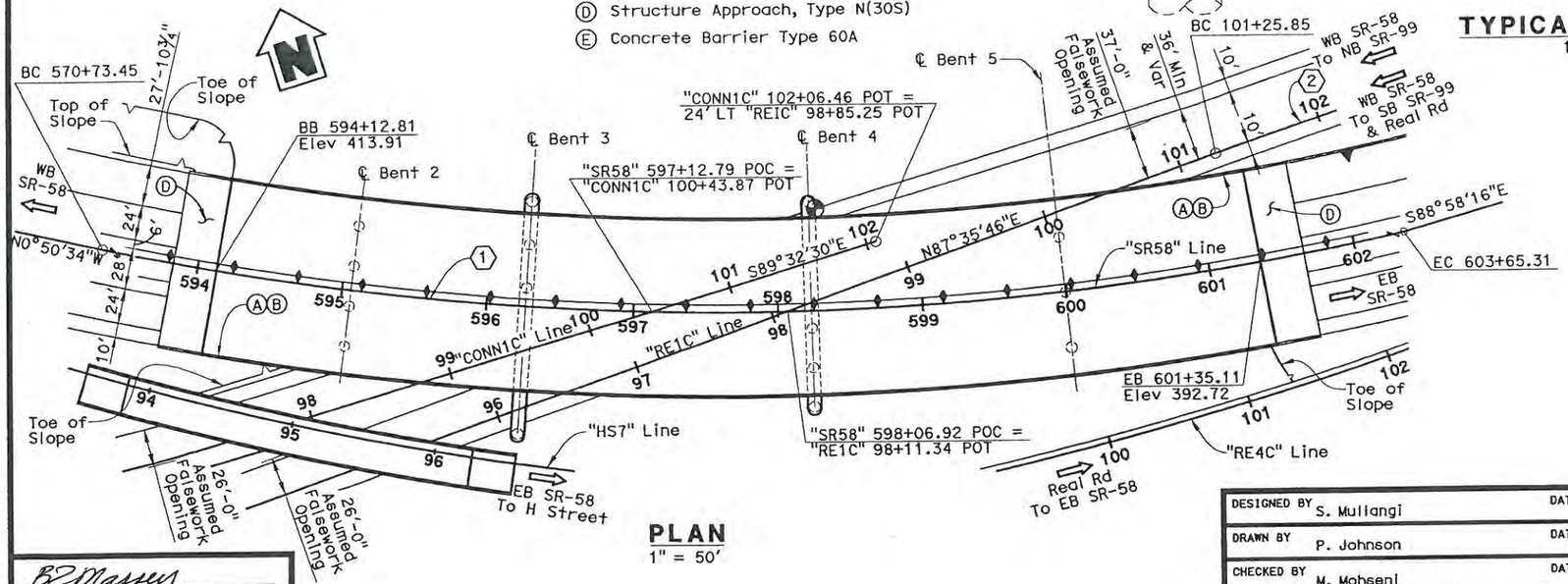

PLAN
1" = 50'

CURVE DATA ①
R = 2100.00'
Δ = 89°48'51"
T = 2093.20'
L = 3291.86'

CURVE DATA ②
R = 4500.00'
Δ = 7°16'50"
T = 286.29'
L = 571.80'

ALTERNATIVE C

DESIGNED BY	S. Mullangi	DATE	8/8/11
DRAWN BY	P. Johnson	DATE	8/8/11
CHECKED BY	M. Mohseni	DATE	1/03/12
APPROVED	M. Mohseni	DATE	1/09/12

Mohsen Mohseni
PROJECT ENGINEER

PLANNING STUDY
SR-58 SEPARATION

BRIDGE NO. 50-xxxx	CU
SCALE: As Noted	EA 06-48460

R.D. Massey
DESIGN OVERSIGHT
6-26-12
SIGN OFF DATE

ADVANCE PLANNING STUDY SHEET (ENGLISH) (REV. 06-01-09)

FILE => $REQUEST

USERNAME => $USER
DATE PLOTTED => $DATE
TIME PLOTTED => $TIME

PREPARED FOR THE STATE OF CALIFORNIA - DEPARTMENT OF TRANSPORTATION

DIST.	COUNTY	ROUTE	POST MILES TOTAL PROJECT
06	KER	58	T31.7/R55.4

TRIP
900 Truxtun Ave, Suite 200
Bakersfield, CA 93301

PARSONS
2201 DUPONT DRIVE, SUITE 200
IRVINE, CA 92612

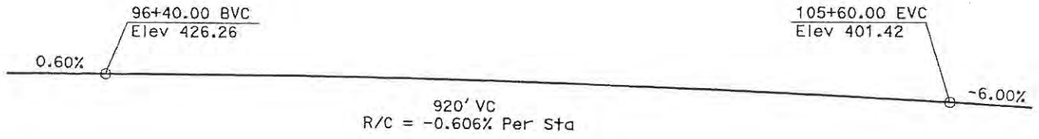

PROFILE GRADE
No Scale

DATE OF ESTIMATE	01-03-12
STRUCTURE DEPTH	= 7'-0"
LENGTH	= 701'-6"
WIDTH	= 27'-11½"
AREA	= 19,613 SF
COST/SF INCLUDING 10% MOBILIZATION & 25% CONTINGENCY	= $180
TOTAL COST	= $3,540,000

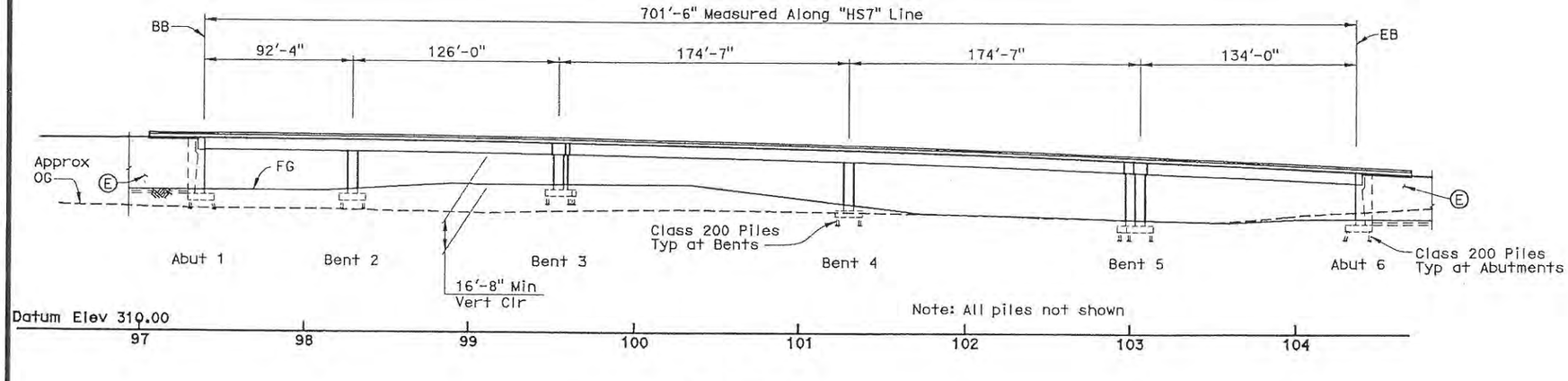

ELEVATION
1" = 40'

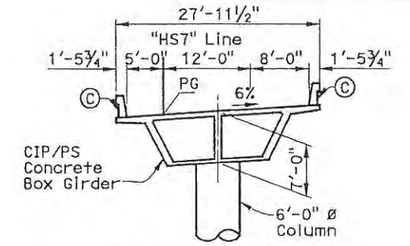

SECTION A-A
1" = 10'

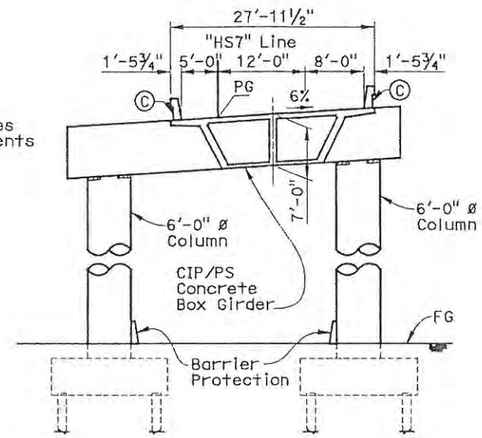

SECTION B-B
1" = 10'

Note:

Traffic will pass through construction site, 15'-0" minimum vertical clearance required under falsework.

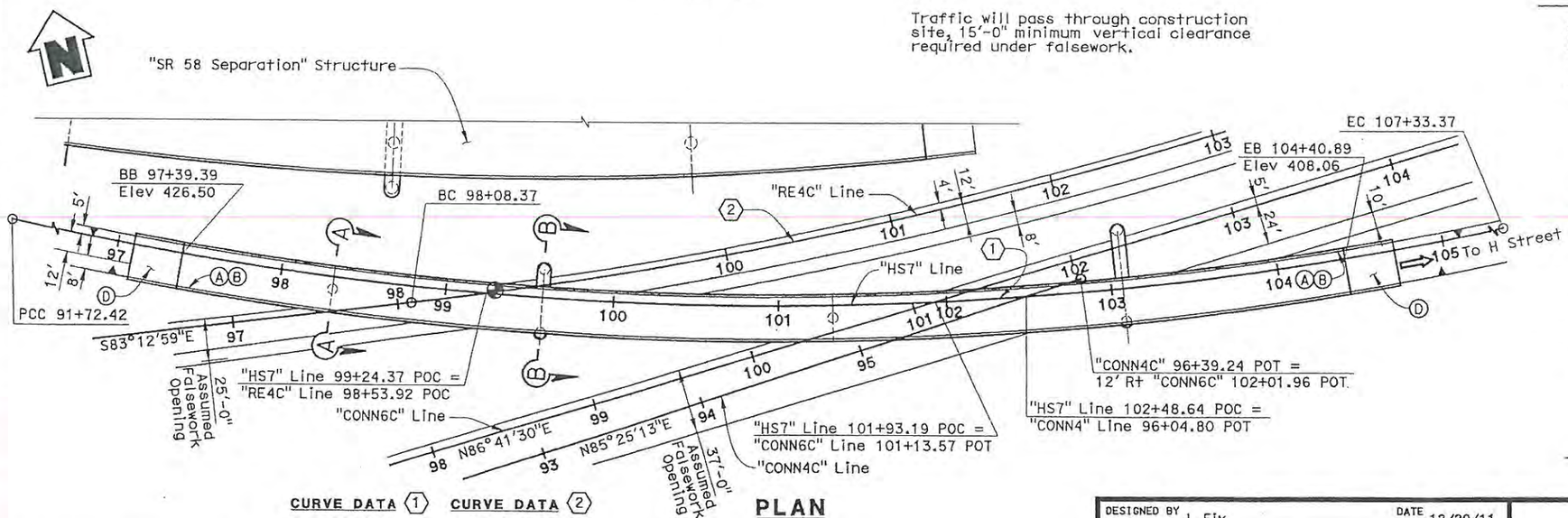

CURVE DATA (1)
R = 2100.00'
Δ = 42°35'19"
T = 818.51'
L = 1560.95'

CURVE DATA (2)
R = 2700.00'
Δ = 10°35'40"
T = 250.34'
L = 499.25'

PLAN
1" = 40'

NOTES

(A) Paint "H Street Off-Ramp Connector Separation"
(B) Paint "Br. No. 50-xxxx"
(C) Concrete Barrier Type 736
(D) Structure Approach, Type N(30S)
(E) Retaining Wall

LEGEND

⇨ Indicates Direction of Traffic
Indicates Point of Minimum Vertical Clearance
Denotes Retaining Wall

ALTERNATIVE C

DESIGNED BY J. Fix	DATE 12/29/11	Mohsen Moheseni PROJECT ENGINEER	PLANNING STUDY
DRAWN BY A. Segura	DATE 12/29/11		EB SR-58 H STREET OFF-RAMP OC
CHECKED BY M. Mohseni	DATE 1/04/12		BRIDGE NO. 50-xxxx / CU
APPROVED M. Mohseni	DATE 1/09/12		SCALE: As Noted / EA 06-48460

B Z Massey
DESIGN OVERSIGHT
6-22-12
SIGN OFF DATE

ADVANCE PLANNING STUDY SHEET (ENGLISH) (REV. 06-01-09)

FILE => H:\646593_CENTENNIAL\SHT\STRUCTURES\APS\H St Off Ramp Conn Sep\Alt c\50-xxxx-a-gp01.dgn

USERNAME => p0038016 DATE PLOTTED => 1/12/2012 TIME PLOTTED => 10:12:46 AM

PREPARED FOR THE STATE OF CALIFORNIA - DEPARTMENT OF TRANSPORTATION

DIST.	COUNTY	ROUTE	POST MILES TOTAL PROJECT
06	KER	58	T31.7/R55.4

TRIP
900 Truxtun Ave, Suite 200
Bakersfield, CA 93301

PARSONS
2201 DUPONT DRIVE, SUITE 200
IRVINE, CA 92612

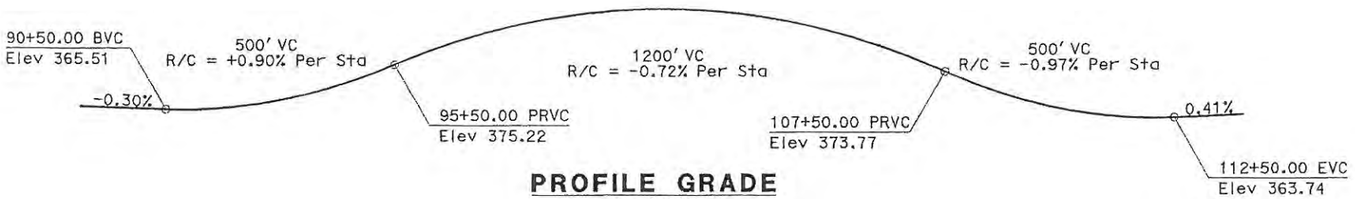

PROFILE GRADE
No Scale

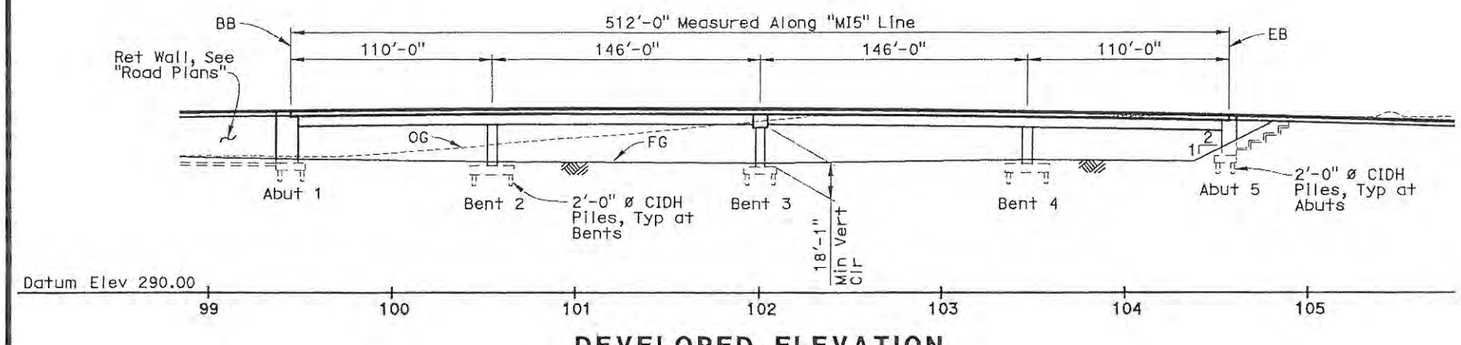

DEVELOPED ELEVATION
1" = 40'

DATE OF ESTIMATE	=	1/3/12
STRUCTURE DEPTH	=	5'-10"
LENGTH	=	512'-0"
WIDTH	=	26'-11½"
AREA	=	13,804 SF
COST/SF INCLUDING 10% MOBILIZATION & 25% CONTINGENCY	=	$ 275
TOTAL COST	=	$ 3,790,000

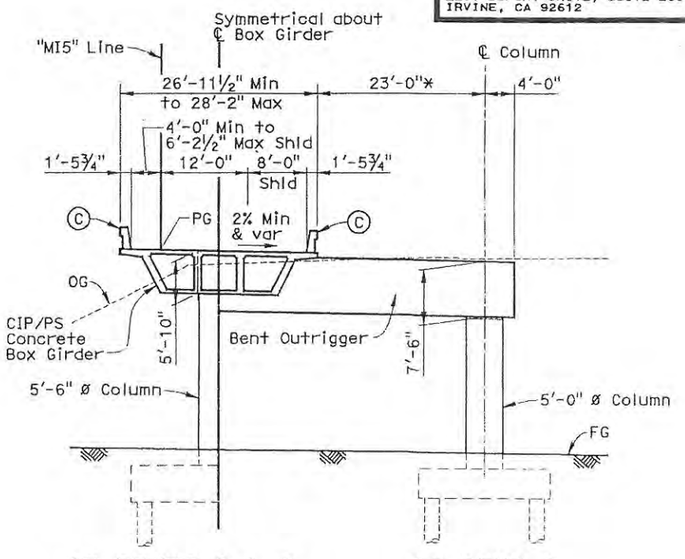

AT BENTS 2 & 4 **AT BENT 3**

* Right outrigger bent shown, 19'-0" for left outrigger bent.
Note: All Piles not Shown.

TYPICAL SECTION
1" = 10'

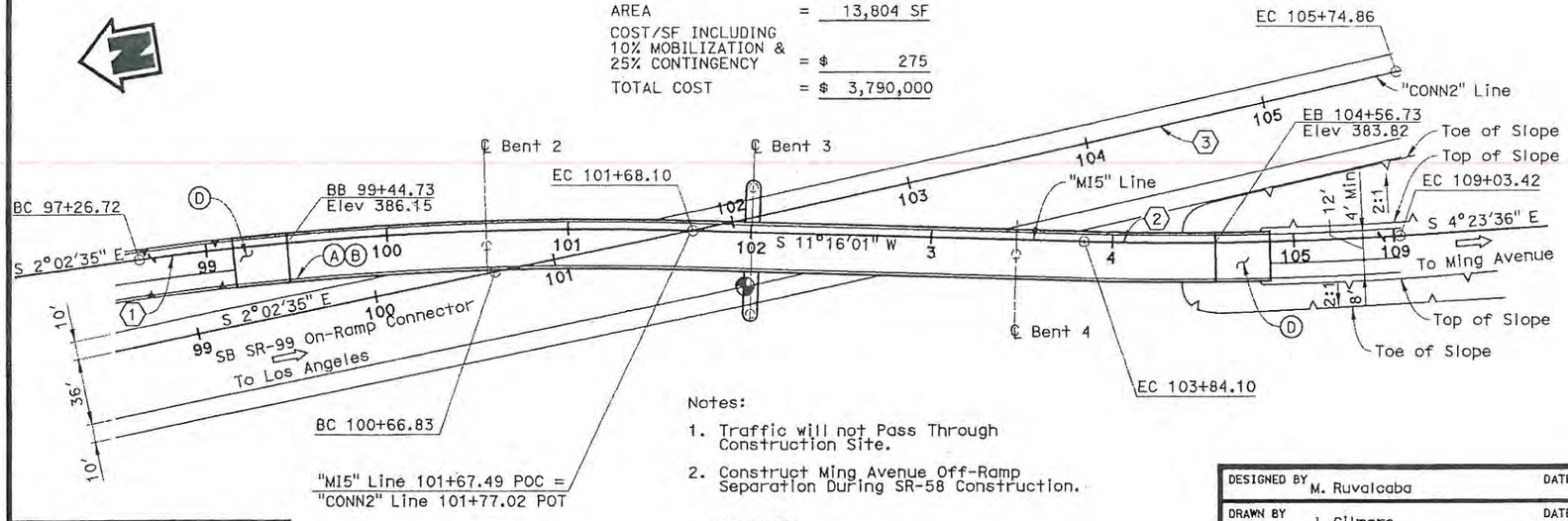

Notes:
1. Traffic will not Pass Through Construction Site.
2. Construct Ming Avenue Off-Ramp Separation During SR-58 Construction.

PLAN
1" = 40'

NOTES:

Ⓐ Paint "MING AVE OFF-RAMP SEPARATION"
Ⓑ Paint "Bridge No. 50-xxxx"
Ⓒ Concrete Barrier Type 736
Ⓓ Structure Approach Type N(30S)

LEGEND:

⇨ Indicates Direction of Traffic
Indicates Point of Mininmum Vertical Clearance
Indicates Retaining Wall

CURVE DATA ①	CURVE DATA ②	CURVE DATA ③
R = 1900.00'	R = 1900.00'	R = 20000.00'
△ = 13°18'37"	△ = 15°39'38"	△ = 1°27'19"
T = 221.69'	T = 261.29'	T = 254.03'
L = 441.38'	L = 519.32'	L = 508.02'

ALTERNATIVE C

DESIGN OVERSIGHT B Massey
SIGN OFF DATE 6-22-12

DESIGNED BY M. Ruvalcaba	DATE 12/28/11	Mohsen Mohseni PROJECT ENGINEER	**PLANNING STUDY**
DRAWN BY J. Gilmore	DATE 1/4/12		**MING AVENUE OFF-RAMP SEPARATION**
CHECKED BY S. Dulor	DATE 1/5/12		BRIDGE NO. 50-XXXX / CU
APPROVED S. Dulor	DATE 1/10/12		SCALE: As Noted / EA 06-48460

ADVANCE PLANNING STUDY SHEET (ENGLISH) (REV. 06-01-09)

FILE => H:\646593_CENTENNIAL\SHT\STRUCTURES\APS\Ming Ave Off-Ramp Conn Sep\Alt C\55-xxx-a-gp01.dgn

USERNAME => p0018016 DATE PLOTTED => 1/11/2012 TIME PLOTTED => 5:25:54 PM

PREPARED FOR THE STATE OF CALIFORNIA - DEPARTMENT OF TRANSPORTATION

DIST.	COUNTY	ROUTE	POST MILES TOTAL PROJECT
06	KER	58	T31.7/R55.4

TRIP
900 Truxtun Ave, Suite 200
Bakersfield, CA 93301

PARSONS
2201 DUPONT DRIVE, SUITE 200
IRVINE, CA 92612

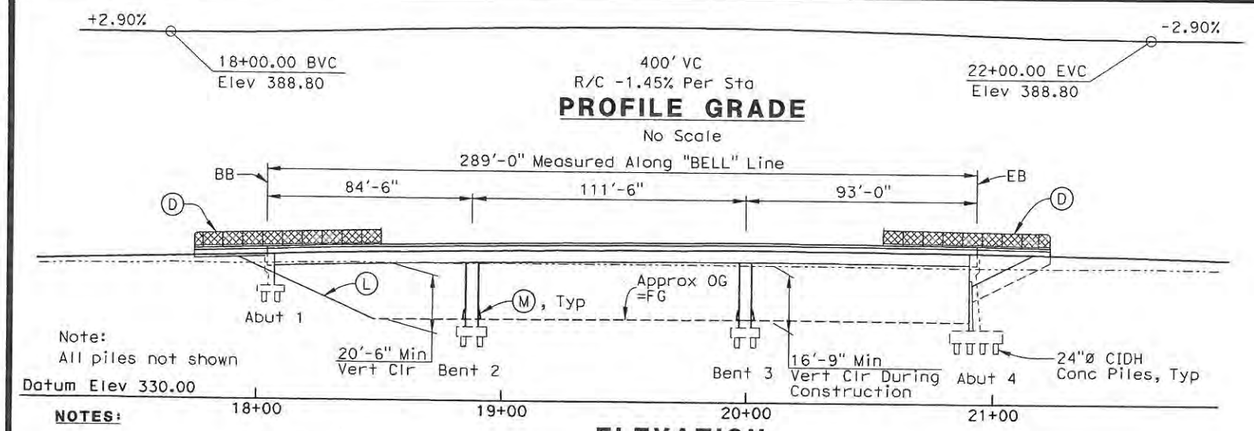

NOTES:

(A) Paint "Br. No. 50-XXXX"
(B) Paint "Belle Terrace OC"
(C) Concrete Barrier Type 26
(D) Chain Link Railing Type 7
(E) Retaining Wall
(F) Structure Approach Type N(30S)
(G) Temporary Railing Type K
(H) Existing Fence
(I) Relocated 4" Casing
(J) Relocated 24" Irrigation Pipe
(K) Relocated 16" Casing
(L) Full Slope Paving
(M) Concrete Barrier Type 60F

LEGEND:

- Existing Bridge
- Denotes Retaining Wall
- Indicates Existing Lane of Traffic
- Bridge Removal
- Closure Pour
- Indicates Point of Mininmum Vertical Clearance
- Indicates Point of Mininmum Vertical Clearance during Construction

DATE OF ESTIMATE	=	3/8/12
BRIDGE REMOVAL	=	17,030 SF
STRUCTURE DEPTH	=	4'-9"
LENGTH	=	289'-0"
WIDTH	=	82'-0"
AREA	=	23,698 SF
COST/SF INCLUDING 10% MOBILIZATION & 25% CONTINGENCY	=	$ 202
TOTAL COST	=	$ 4,790,000

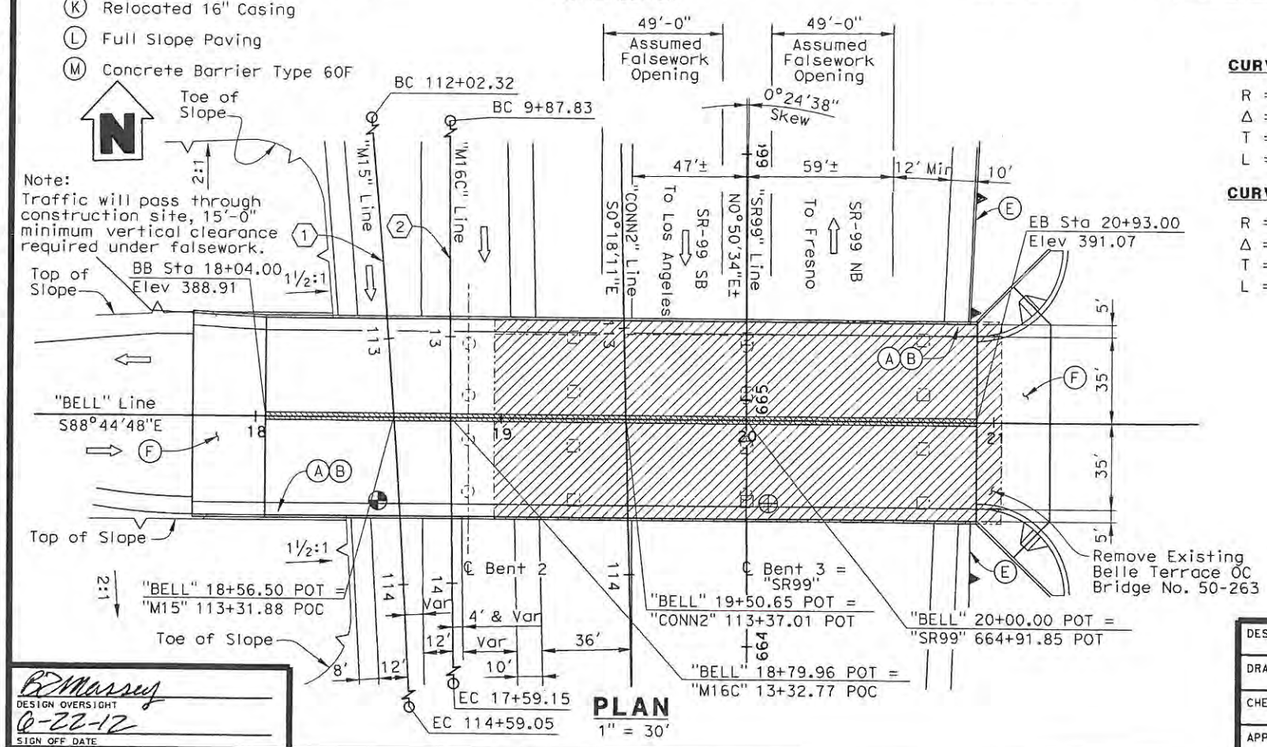

CURVE DATA (1)
R = 5183.00'
Δ = 2°50'17"
T = 128.39'
L = 256.73'

CURVE DATA (2)
R = 20,000.00'
Δ = 2°12'35"
T = 385.71'
L = 771.33'

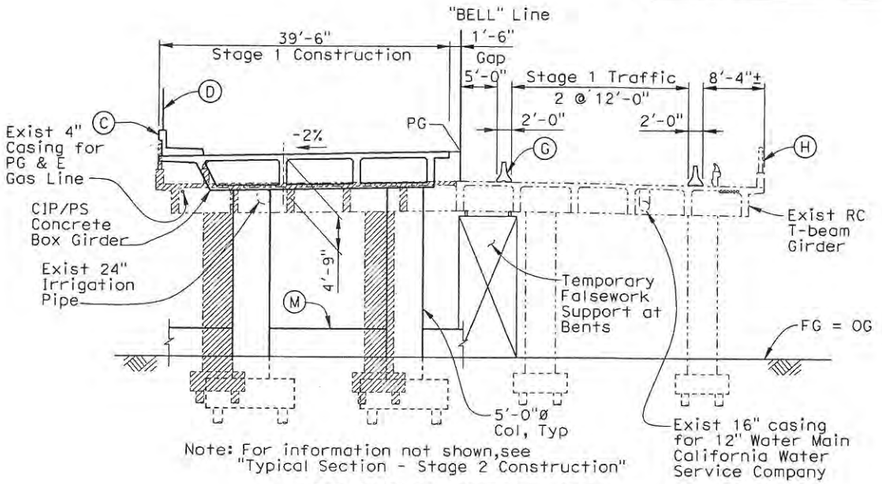

Note: For information not shown, see "Typical Section - Stage 2 Construction"

TYPICAL SECTION - STAGE 1 CONSTRUCTION

1" = 10'

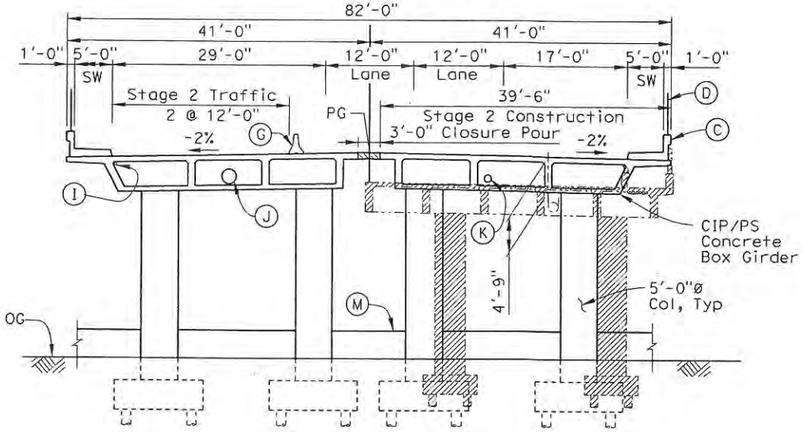

Not all piles shown

TYPICAL SECTION - STAGE 2 CONSTRUCTION

1" = 10'

ALTERNATIVE C

PLANNING STUDY

BELLE TERRACE OC (REPLACE)

DESIGNED BY	J. Rudolph	DATE	3/8/12
DRAWN BY	A. Segura	DATE	3/14/12
CHECKED BY	M. Mohseni	DATE	3/15/12
APPROVED	M. Mohseni	DATE	3/19/12

Mohsen Mohseni
PROJECT ENGINEER

BRIDGE NO. 50-XXXX | CU
SCALE: As Noted | EA 06-48460

DESIGN OVERSIGHT
6-22-12
SIGN OFF DATE

ADVANCE PLANNING STUDY SHEET (ENGLISH) (REV. 06-01-09)

FILE => $REQUEST

USERNAME => $USER DATE PLOTTED => $DATE TIME PLOTTED => $TIME