DIST	COUNTY	ROUTE	POST MILES TOTAL PROJECT	SHEET No.	TOTAL SHEETS

REGISTERED CIVIL ENGINEER DATE

PLANS APPROVAL DATE

REGISTERED PROFESSIONAL ENGINEER No. Exp. CIVIL STATE OF CALIFORNIA

The State of California or its officers or agents shall not be responsible for the accuracy or completeness of scanned copies of this plan sheet.

The Registered Civil Engineer for the project is responsible for the selection and proper application of the component design and any modifications shown.

NOTES:

1. For SECTIONS F-F and G-G See "CHANNEL ASSEMBLY DETAILS No. 2" sheet for TYPE II Joint.

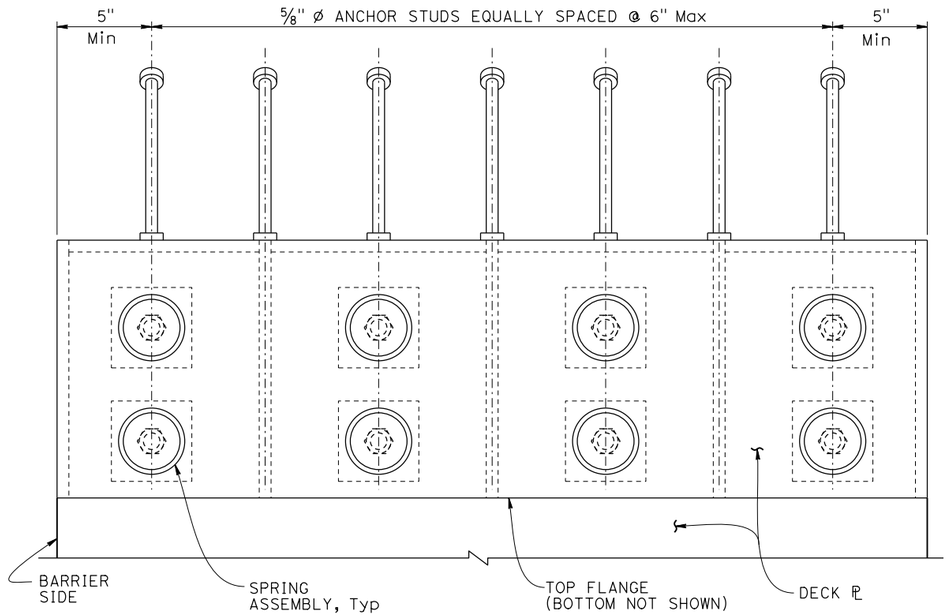

PLAN - BUILT UP CHANNEL ASSEMBLY EXTERNAL (Typ)

3" = 1'-0"

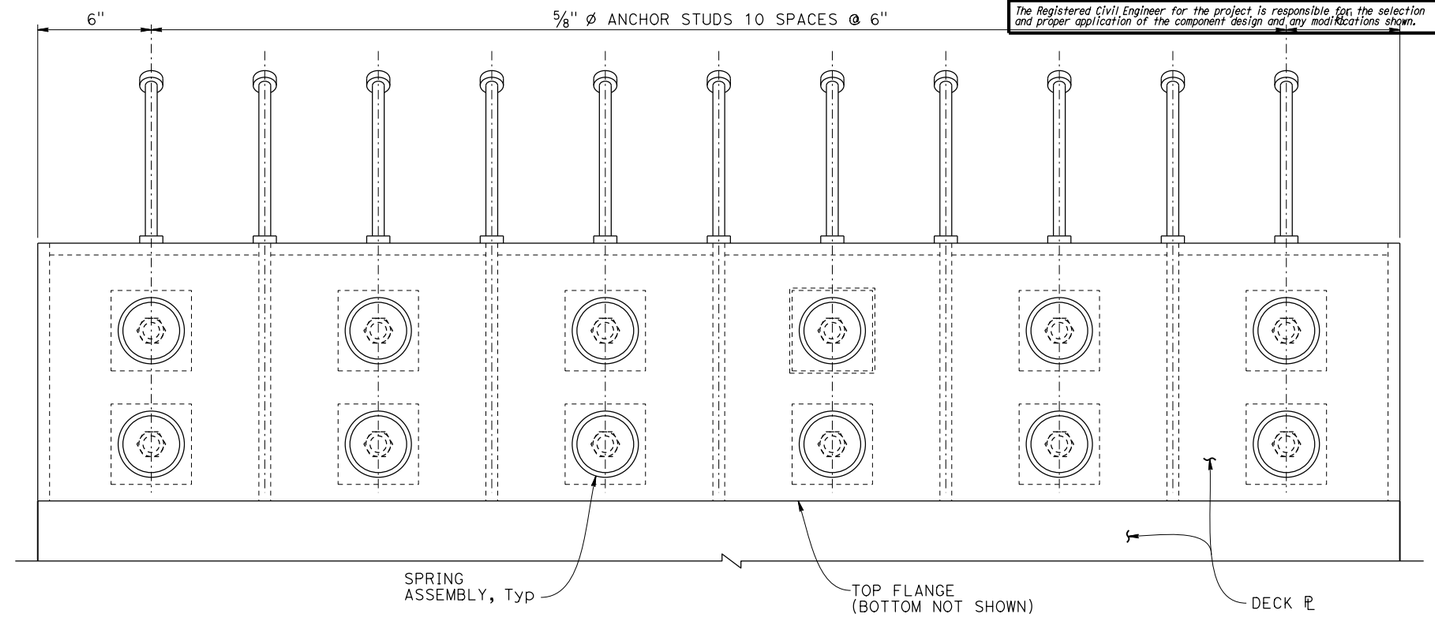

PLAN - BUILT UP CHANNEL ASSEMBLY INTERNAL (Typ)

3" = 1'-0"

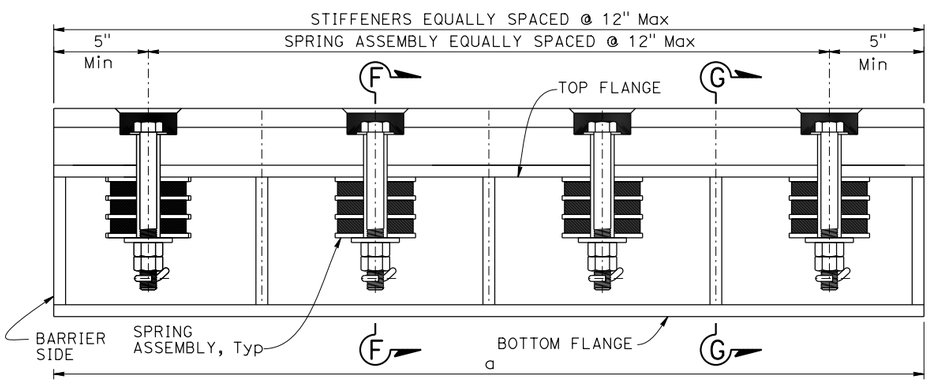

ELEVATION - BUILT UP CHANNEL ASSEMBLY EXTERNAL (Typ)

3" = 1'-0"

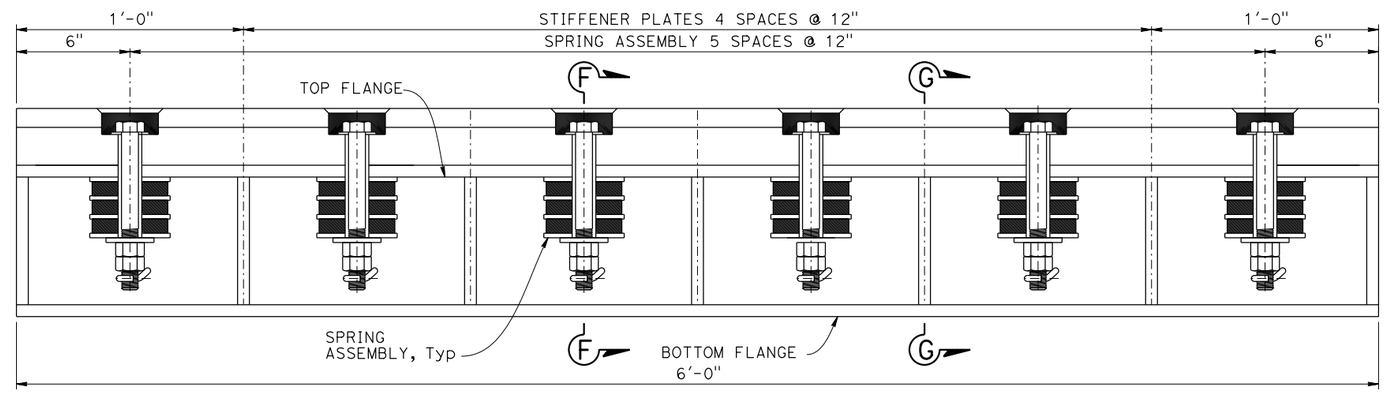

ELEVATION - BUILT UP CHANNEL ASSEMBLY INTERNAL (Typ)

3" = 1'-0"

BRIDGE STANDARD DETAILS

xs8-100-4	July 2016	The components of the Bridge Standard Details have been prepared under the responsible charge of the Technical Owner, a registered civil engineer in the State of California
FILE NO.	APPROVAL DATE	

STATE OF CALIFORNIA DEPARTMENT OF TRANSPORTATION

DIVISION OF ENGINEERING SERVICES

BRIDGE NO.

POST MILE

SEISMIC JOINT (TYPE II, HALF CHANNEL) CHANNEL ASSEMBLY DETAILS No. 1

Refer to: http://www.dot.ca.gov/hq/esc/techpubs/manual/bridgemanuals/bridge-standard-detail-sheets/index.html

FILE => xs8-100-4.dgn
USERNAME => s136236 TIME PLOTTED => 15:17 DATE PLOTTED => 14-JUL-2016

ORIGINAL SCALE IN INCHES FOR REDUCED PLANS 0 1 2 3

UNIT:
PROJECT NUMBER & PHASE: CONTRACT NO.:

DISREGARD PRINTS BEARING EARLIER REVISION DATES

REVISION DATES: ~~2-08-16~~ 7-11-16

SHEET 4 OF 9